Foreword

Congratulations on choosing a SUBARU vehicle. This Owner's Manual has all the information necessary to keep your SUBARU in excellent condition and to properly maintain the emission control system for minimizing emission pollutants. We urge you to read this manual carefully so that you may understand your vehicle and its operation. For information not found in this Owner's Manual, such as details concerning repairs or adjustments, please contact the SUBARU dealer from whom you purchased your SUBARU or the nearest SUBARU dealer.

The information, specifications and illustrations found in this manual are those in effect at the time of printing. SUBARU CORPORATION reserves the right to change specifications and designs at any time without prior notice and without incurring any obligation to make the same or similar changes on vehicles previously sold. This Owner's Manual applies to all models and covers all equipment, including factory installed options. Some explanations, therefore may be for equipment not installed in your vehicle.

Please leave this manual in the vehicle at the time of resale. The next owner will need the information found herein.

SUBARU CORPORATION, TOKYO, JAPAN

"SUBARU" and the six-star cluster design are registered trademarks of SUBARU CORPORATION.

© Copyright 2024 SUBARU CORPORATION

This manual describes the following vehicle type.

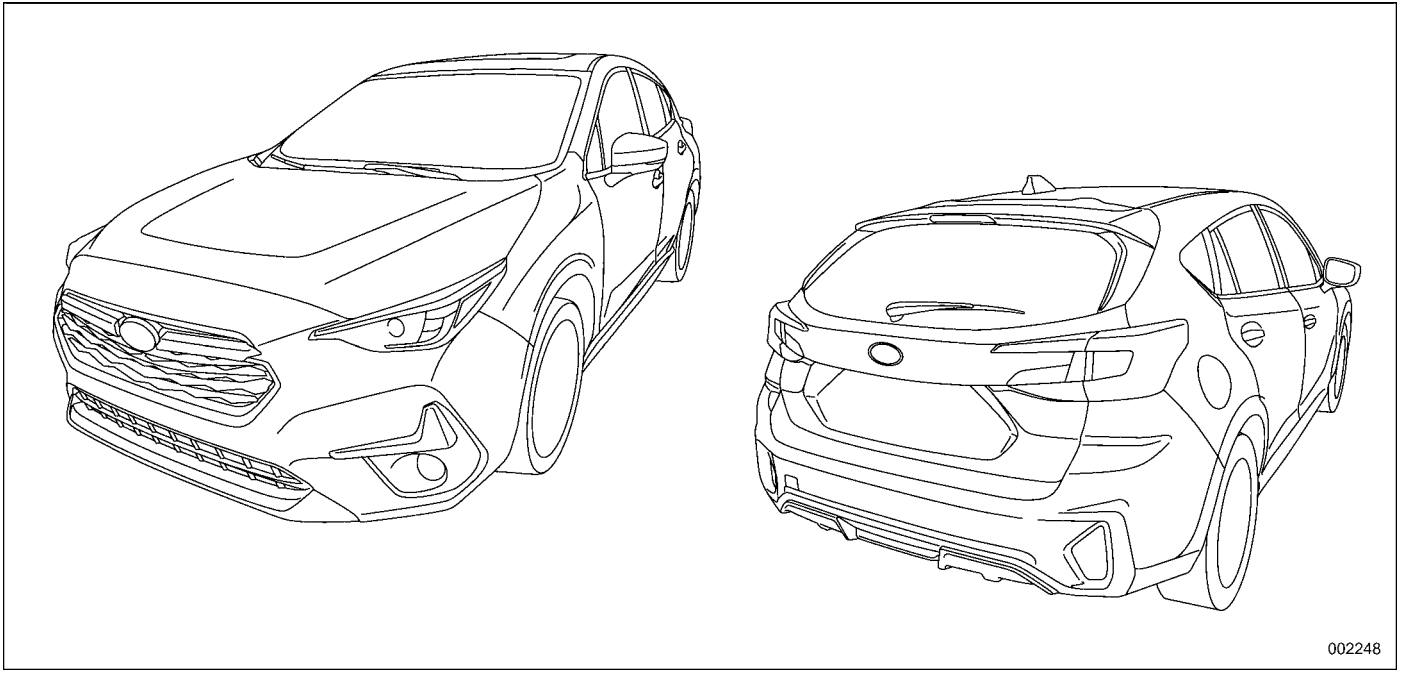

Table of Contents

Introduction	*1*	
Illustrated Index	*13*	
Seat, Seatbelt and SRS Airbags	*27*	*Chapter 1*
Keys and Doors	*105*	*Chapter 2*
Instruments and Controls	*143*	*Chapter 3*
Climate Control	*259*	*Chapter 4*
Audio	*277*	*Chapter 5*
Interior Equipment	*279*	*Chapter 6*
Starting and Operating	*303*	*Chapter 7*
Driving Tips	*391*	*Chapter 8*
In Case of Emergency	*405*	*Chapter 9*
Appearance Care	*433*	*Chapter 10*
Maintenance and Service	*441*	*Chapter 11*
Specifications	*489*	*Chapter 12*
Consumer Information and Reporting Safety Defects	*503*	*Chapter 13*
Index	*521*	*Chapter 14*

- **Warranties** 2
  - Warranties for U.S.A. 2
  - Warranties for Canada 2
  - Warranties except for U.S.A. and Canada 2
- **How to Use This Owner's Manual** 2
  - Using Your Owner's Manual 2
  - Safety Warnings 3
  - Safety Symbol 4
  - Abbreviation List 4
- **Vehicle Symbols** 5
- **Safety Precautions When Driving** 5
  - Seatbelt and SRS Airbag 5
  - Child Safety 5
  - Engine Exhaust Gas (Carbon Monoxide) 6
  - Drinking and Driving 7
  - Drugs and Driving 7
  - Driving When Tired or Sleepy 7
  - Modification of Your Vehicle 8
  - Use of Cell Phones/Texting and Driving 8
  - Driving Vehicles Equipped with Navigation System 8
  - Driving with Pets 8
  - Tire Pressures 9
  - Attaching Accessories 9
  - Vehicle Operation 9
- **General Information** 11
  - California Perchlorate Advisory 11
  - Noise from under the Vehicle 11
  - Vehicle Data Recording 11
  - Event Data Recorder 11

Warranties

■ Warranties for U.S.A.

SUBARU vehicles distributed by Subaru of America, Inc. and sold at retail by an authorized SUBARU dealer in the United States come with the following warranties:

- **SUBARU Limited Warranties**
- **Federal Emission Control Systems Warranties**
- **California Emissions Control Systems Warranties**

All warranty information, including applicability, details of coverage and exclusions, is in the “Warranty and Maintenance Booklet”. Read these warranties carefully.

■ Warranties for Canada

SUBARU vehicles distributed by Subaru Canada, Inc. and sold at retail by an authorized SUBARU dealer in Canada come with the following warranties:

- **SUBARU Limited Warranty**
- **Emission Control System Warranty**

All warranty information, including applicability, details of coverage and exclusions, is in the “Warranty and Service Booklet”. Read these warranties carefully.

■ Warranties except for U.S.A. and Canada

All warranty information, including details of coverage and exclusions, is in the “Warranty and Maintenance Booklet”. Read these warranties carefully.

How to Use This Owner’s Manual

■ Using Your Owner’s Manual

Before you operate your vehicle, carefully read this manual. To protect yourself and extend the service life of your vehicle, follow the instructions in this manual. Failure to observe these instructions may result in serious injury and damage to your vehicle.

This manual is composed of fourteen chapters. Each chapter begins with a brief table of contents, so you can usually tell at a glance if that chapter contains the information you want.

Introduction

This chapter informs you general information before driving.

Illustrated Index

This chapter informs you about the vehicle layout with illustrations.

Chapter 1: Seat, Seatbelt and SRS Airbags

This chapter informs you how to use the seat and seatbelt and contains precautions for the SRS airbags.

Chapter 2: Keys and Doors

This chapter informs you how to operate the keys, locks and windows.

Chapter 3: Instruments and Controls

This chapter informs you about the operation of instrument panel indicators and how to use the instruments and other switches.

Chapter 4: Climate Control

This chapter informs you how to operate the climate control.

Chapter 5: Audio

This chapter informs you about your audio system.

Chapter 6: Interior Equipment

This chapter informs you how to operate interior equipment.

Chapter 7: Starting and Operating

This chapter informs you how to start and operate your SUBARU.

Chapter 8: Driving Tips

This chapter informs you how to drive your SUBARU in various conditions and explains some safety tips on driving.

Chapter 9: In Case of Emergency

This chapter informs you what to do if you have a problem, such as a flat tire or engine overheating.

Chapter 10: Appearance Care

This chapter informs you how to keep your SUBARU looking good.

Chapter 11: Maintenance and Service

This chapter informs you when you need to take your SUBARU to the dealer for scheduled maintenance and informs you how to keep your SUBARU running properly.

Chapter 12: Specifications

This chapter informs you about the dimensions and capacities of your SUBARU.

Chapter 13: Consumer Information and Reporting Safety Defects

This chapter informs you about Tire information, Uniform tire quality grading standards and Reporting safety defects.

Chapter 14: Index

This is an alphabetical listing of all that's in this manual. You can use it to quickly find something you want to read.

For EyeSight system:

For details about the EyeSight system, refer to the Owner's Manual supplement for the EyeSight system.

Depending on specifications, the vehicle shown in the illustrations may differ from your vehicle in terms of equipment.

■ Safety Warnings

You will find a number of WARNINGs, CAUTIONs and NOTEs in this manual.

These safety warnings alert you to potential hazards that could result in injury to you or others.

Please read these safety warnings as well as all other portions of this manual carefully in order to gain a better understanding of how to use your SUBARU vehicle safely.

⚠ WARNING

A WARNING indicates a situation in which serious injury or death could result if the warning is ignored.

⚠ CAUTION

A CAUTION indicates a situation in which injury or damage to your vehicle, or both, could result if the caution is ignored.

NOTE

A NOTE gives information or suggestions how to make better use of your vehicle.

– CONTINUED –

■ Safety Symbol

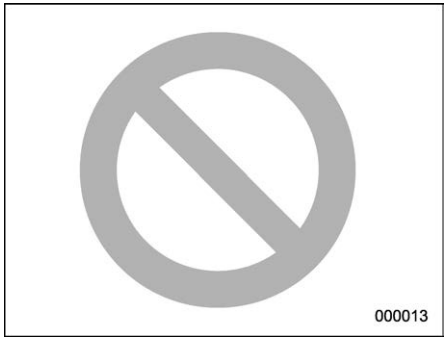

You will find a circle with a slash through it in this manual. This symbol means "Do not", "Do not do this", or "Do not let this happen", depending upon the context.

■ Abbreviation List

You may find several abbreviations in this manual. The meanings of the abbreviations are shown in the following list.

Abbreviation	Meaning
ABS	Anti-lock brake system
A/C	Air conditioner
AKI	Anti knock index
ALR	Automatic locking retractor
ALR/ELR	Automatic locking retractor/ Emergency locking retractor
AVH	Auto Vehicle Hold
AWD	All-wheel drive
BSD	Blind Spot Detection
CVT	Continuously variable transmission
DRL	Daytime running light
EBD	Electronic brake force distribution
ELR	Emergency locking retractor
GAW	Gross axle weight
GAWR	Gross axle weight rating
GPS	Global positioning system
GVW	Gross vehicle weight
GVWR	Gross vehicle weight rating
LATCH	Lower anchors and tethers for children
LCA	Lane Change Assist
LED	Light emitting diode
MIL	Malfunction indicator light
MMT	Methylcyclopentadienyl manganese tricarbonyl
OBD	On-board diagnostics
RAB	Reverse Automatic Braking system
RCTA	Rear Cross Traffic Alert
RON	Research octane number
SI-DRIVE	SUBARU Intelligent Drive
SRH	Steering Responsive Headlight
SRS	Supplemental restraint system
TIN	Tire identification number
TPMS	Tire pressure monitoring system

Vehicle Symbols

There are some of the symbols you may see on your vehicle.

For warning and indicator lights, refer to “Warning and Indicator Lights” ☞P24.

Mark	Name
	WARNING
	CAUTION
	Read these instructions carefully
	Wear eye protection
	Battery fluid contains sulfuric acid
	Keep children away
	Keep flames away
	Prevent explosions

Safety Precautions When Driving

■ Seatbelt and SRS Airbag

WARNING

- **All persons in the vehicle must fasten their seatbelts BEFORE the vehicle starts to move. Otherwise, the possibility of serious injury becomes greater in the event of a sudden stop or accident.**
- **To obtain maximum protection in the event of an accident, the driver and all passengers must always wear seatbelts when in the vehicle. The SRS (Supplemental Restraint System) airbag does not replace the safety benefits of wearing a seatbelt. Used in combination with the seatbelts, the SRS airbag offers vehicle occupants the best possible protection in the event of a serious accident.**

  Not wearing a seatbelt increases the chance of severe injury or death in a crash even when the vehicle has the SRS airbag.
- **The SRS airbags deploy with considerable speed and force. Occupants who are not seated in the proper upright position when the SRS airbag deploys could suffer very serious injuries. Because the SRS airbag needs enough space for deployment, the driver should always sit upright and well back in the seat as far from the steering wheel as practical while still maintaining full vehicle control and the front passenger should move the seat as far back as possible and sit upright and well back in the seat.**

For instructions and precautions, carefully read the following sections.

- For the seatbelt system, refer to “Seatbelts” ☞P39.
- For the SRS airbag system, refer to “SRS Airbag (Supplemental Restraint System Airbag)” ☞P71.

■ Child Safety

WARNING

- **Never hold a child on your lap or in your arms while the vehicle is moving. The passenger cannot**

– CONTINUED –

protect the child from injury in a collision, because the child will be caught between the passenger and objects inside the vehicle.

- **NEVER INSTALL A REARWARD FACING CHILD RESTRAINT SYSTEM ON THE FRONT PASSENGER'S SEAT. DOING SO RISKS SERIOUS INJURY OR DEATH TO THE CHILD BY PLACING THE CHILD'S HEAD TOO CLOSE TO THE SRS AIRBAG.**
- **SUBARU strongly recommends that ALL infants and children (including those in child restraint systems) sit in the REAR seat properly restrained in a child restraint system or in a seatbelt, whichever is appropriate for the child's age, height and weight. The SRS airbag deploys with considerable speed and force and can injure or even kill children, especially if they are not restrained or improperly restrained. Because children are lighter and weaker than adults, their risk of being injured from deployment is greater. According to accident statistics, children are safer when properly restrained in the rear seating positions than in the front seating positions. For instructions and precautions concerning child restraint systems, refer to "Child Restraint Systems" ☞P54.**
- **Always turn the child safety locks to the "LOCK" position when children sit in the rear seat. Serious injury could result if a child accidentally opens the door and falls out. Refer to "Child Safety Locks" ☞P134.**
- **Always lock the passengers' windows using the lock switch when children are riding in the vehicle. Failure to follow this procedure could result in injury to a child operating the power window. Refer to "Windows" ☞P134.**
- **Never leave unattended children, adults or animals in the vehicle. They could accidentally injure themselves or others through inadvertent operation of the vehicle. Also, on hot or sunny days, temperature in a closed vehicle could quickly become high enough to cause severe or possibly fatal injuries to them.**
- **When leaving the vehicle, close all windows and lock all doors.**

For instructions and precautions, carefully read the following sections.

- For the seatbelt system, refer to "Seatbelts" ☞P39.
- For the child restraint system, refer to "Child Restraint Systems" ☞P54.
- For the SRS airbag system, refer to "SRS Airbag (Supplemental Restraint System Airbag)" ☞P71.

■ Engine Exhaust Gas (Carbon Monoxide)

⚠ WARNING

- **Never inhale engine exhaust gas. Engine exhaust gas contains carbon monoxide, a colorless and odorless gas which is dangerous, or even lethal, if inhaled.**
- **Always properly maintain the engine exhaust system to prevent engine exhaust gas from entering the vehicle.**
- **Never run the engine in a closed space, such as a garage, except for the brief time needed to drive the vehicle in or out of it.**

- **Avoid remaining in a parked vehicle for a long time while the engine is running. If that is unavoidable, then use the ventilation fan to force fresh air into the vehicle.**
- **Always keep the front ventilator inlet grille free from snow, leaves or other obstructions to ensure that the ventilation system always works properly.**
- **If at any time you suspect that exhaust fumes are entering the vehicle, have the problem checked and corrected as soon as possible. If you must drive under these conditions, drive only with all windows fully open.**
- **Keep the rear gate closed while driving to prevent exhaust gas from entering the vehicle.**

■ Drinking and Driving

⚠ WARNING

Drinking and then driving is very dangerous. Alcohol in the bloodstream delays your reaction and impairs your perception, judgment and attentiveness. If you drive after drinking – even if you drink just a little – it will increase the risk of being involved in a serious or fatal accident, injuring or killing yourself, your passengers and others. In addition, if you are injured in the accident, alcohol may increase the severity of that injury.

Please don't drink and drive.

Drunken driving is one of the most frequent causes of accidents. Since alcohol affects all people differently, you may have consumed too much alcohol to drive safely even if the level of alcohol in your blood is below the legal limit. The safest thing you can do is never drink and drive. However if you have no choice but to drive, stop drinking and sober up completely before getting behind the wheel.

■ Drugs and Driving

⚠ WARNING

There are some drugs (over the counter and prescription) that can delay your reaction time and impair your perception, judgment and attentiveness. If you drive after taking them, it may increase your, your passengers' and other persons' risk of being involved in a serious or fatal accident.

If you are taking any drugs, check with your doctor or pharmacist or read the literature that accompanies the medication to determine if the drug you are taking can impair your driving ability. Do not drive after taking any medications that can make you drowsy or otherwise affect your ability to safely operate a motor vehicle. If you have a medical condition that requires you to take drugs, please consult with your doctor.

Never drive if you are under the influence of any illicit mind-altering drugs. For your own health and well-being, we urge you not to take illegal drugs in the first place and to seek treatment if you are addicted to those drugs.

■ Driving When Tired or Sleepy

⚠ WARNING

When you are tired or sleepy, your reaction will be delayed and your perception, judgment and attentiveness will be impaired. If you drive when tired or sleepy, your, your passengers' and other persons' chances of being involved in a

– CONTINUED –

serious accident may increase.

Please do not continue to drive but instead find a safe place to rest if you are tired or sleepy. On long trips, you should make periodic rest stops to refresh yourself before continuing on your journey. When possible, you should share the driving with others.

■ Modification of Your Vehicle

⚠ WARNING

Do not remove the genuine SUBARU navigation and/or audio system. Doing so could cause the following functions to be inoperable.

- **Combination meter display (color LCD)**
- **Rear view image and help lines**
- **Vehicle settings**
- **Climate control**
- **Clock**

⚠ CAUTION

Your vehicle should not be modified other than with genuine SUBARU parts and accessories. Other types of modifications could affect its performance, safety or durability, and may even violate governmental regulations. In addition, damage or performance problems resulting from modification may not be covered under warranties.

■ Use of Cell Phones/Texting and Driving

⚠ CAUTION

Do not talk on a cell phone or text while driving; it may distract your attention from driving and lead to an accident. If you use a cell phone to talk or text, first pull off the road and park in a safe place. In some States/Provinces, it may be lawful to talk on a phone while driving, but only if the phone is hands-free.

■ Driving Vehicles Equipped with Navigation System

⚠ WARNING

Do not allow the monitor to distract your attention from driving. Also, do not operate the controls of the navigation system while driving. The loss of attention to driving could lead to an accident. If you wish to operate the controls of the navigation system, first take the vehicle off the road and stop it in a safe location.

■ Driving with Pets

Unrestrained pets can interfere with your driving and distract your attention from driving. In a collision or sudden stop, unrestrained pets or cages can be thrown around inside the vehicle and hurt you or your passengers. Besides, the pets can be hurt under these situations. It is also for their own safety that pets should be properly restrained in your vehicle. Restrain a pet with a special traveling harness which can be secured to the rear seat with a seatbelt or use a pet carrier which can be secured to the rear seat by routing a seatbelt through the carrier's handle. Never restrain pets or pet carriers in the front passenger's seat. For further information, consult your veterinarian, local animal protection society or pet shop.

■ Tire Pressures

Check and, if necessary, adjust the pressure of each tire at least once a month and before any long journey.

Check the tire pressure when the tires are cold. Use a pressure gauge to adjust the tire pressures to the values shown on the tire inflation pressure label. For detailed information, refer to “Tires and Wheels” ☞P460.

WARNING

Driving at high speeds with excessively low tire pressures can cause the tires to deform severely and to rapidly become hot. A sharp increase in temperature could cause tread separation, and destruction of the tires. The resulting loss of vehicle control could lead to an accident.

■ Attaching Accessories

WARNING

- **Do not attach any accessories, labels or stickers (other than properly placed inspection stickers) to the windshield. Such items may obstruct your view.**
- **If it is necessary to attach an accessory (such as an electronic toll collection (ETC) device or security pass) to the windshield, consult your SUBARU dealer for details on the proper location.**
- **Do not connect any unauthorized accessories or devices to the data link connector (OBDII port). This connector should be used only with compatible diagnostic devices for inspection and maintenance by an authorized service technician using authorized service tools. Connecting unauthorized devices, such as a driver-behavior tracking device, may adversely affect vehicle systems, including safety systems, or allow others to access information stored in your vehicle. The use of unauthorized devices may also cause unexpected malfunctions, such as a drained battery, or may damage vehicle systems. The manufacturer’s warranty will not cover any part that malfunctions, fails, or is damaged due to the use of an unauthorized device with the data link connector.**

■ Vehicle Operation

▼ Before leaving vehicle unattended

CAUTION

Always lock your vehicle and carry your access key fob with you.

There is a risk for vehicle theft or unauthorized persons tampering with the vehicle or installing malicious electronic devices.

▼ Key number plate storage

NOTE

- **The key number is required when repairing the vehicle or making a spare access key fob. If you lose the plate with these numbers stamped on it, you will not be able to make a spare access key fob. To prevent it from being stolen, do not leave it in the vehicle and store it in a safe**

– CONTINUED –

place. Refer to "Keyless Access with Push-Button Start System" ☞P106.

- If you lose your key, we recommend that you delete the lost access key fob registration to prevent theft. Only a SUBARU dealer can delete key fob registration. We recommend that you consult your SUBARU dealer. Refer to "Key Replacement" ☞P121.

▼ Vehicle modifications

WARNING

- Do not install parts, make custom adjustments or perform wiring or other operations that are not suitable for the vehicle.
- Do not connect accessories to the vehicle wiring or connectors unless they are genuine SUBARU products. SUBARU's vehicle warranty does not cover any malfunctions resulting from connecting the vehicle to products other than those specified.
- It may be illegal to modify the vehicle by installing parts other than genuine SUBARU parts. Consult your SUBARU dealer about the kinds of parts (tires, wheels, mufflers, etc.) you can legally install on your vehicle.

▼ Device installation

WARNING

Connecting devices that are not intended to be used in the vehicle or in a particular connector can adversely affect the vehicle system or cause the auxiliary battery to discharge. It may also cause personal information leaks or unauthorized remote operation of vehicle features, resulting in unforeseen complications. Any complication caused by connecting a device other than one intended to be used in the vehicle is not covered by the manufacturer's warranty. SUBARU also bears no responsibility for any such complication.

- The vehicle trouble diagnosis connector should only be used to connect the vehicle data link connector (OBDII) for inspection and maintenance purposes.
- Use the USB port only for data communication with your vehicle and for device charging.

▼ Suspicious device handling

WARNING

If you find an unrecognized device on your vehicle, consult your SUBARU dealer immediately.

Any problem or safety risk due to the connection of an unauthorized device is not covered by the manufacturer's warranty. SUBARU also bears no responsibility for any such cause.

▼ Deleting personal information from vehicle

CAUTION

When transferring ownership of your vehicle, delete the personal information registered in the vehicle by performing a Factory Data Reset. For details about the Factory Data Reset, refer to the Owner's Manual supplement for the audio and navigation system.

Note that certain personal information inputted in the Head Unit and the phone number of any paired device will remain in vehicle data logs even after the Factory Data Reset. These data logs are strictly for quality assurance purposes and not viewable by any subsequent purchaser. To have those logs deleted permanently from the vehicle, please contact your SUBARU dealer.

General Information

■ California Perchlorate Advisory

Certain vehicle components, such as airbag modules, seatbelt pretensioners and keyless entry transmitter batteries, may contain perchlorate material. Special handling may apply for service or vehicle end of life disposal. See www.dtsc.ca.gov/hazardouswaste/perchlorate.

■ Noise from under the Vehicle

NOTE

You may hear a noise from under the vehicle approximately 5 to 10 hours after the ignition switch is turned to the "LOCK"/"OFF" position. However, this does not indicate a malfunction. This noise is caused by the operation of the fuel evaporation leakage checking system and the operation is normal. The noise will stop after approximately 15 minutes.

■ Vehicle Data Recording

The vehicle is equipped with sophisticated computers that will record certain data, such as:

- Vehicle speed
- Engine speed
- Engine control information
- Shift state information
- Driving information, etc.

▼ Data usage

SUBARU may use the data recorded in this computer to diagnose malfunctions, conduct research and development, and improve quality.

SUBARU will not disclose the recorded data to a third party except:

- With the consent of the vehicle owner or with the consent of the lessee if the vehicle is leased
- In response to an official request by the police, a court of law or a government agency
- For use by SUBARU in a lawsuit
- For research purposes where the data is not tied to a specific vehicle or vehicle owner

■ Event Data Recorder

This vehicle is equipped with an event data recorder (EDR). The main purpose of an EDR is to record, in certain crash or near crash-like situations, such as an air bag deployment or hitting a road obstacle, data that will assist in understanding how a vehicle's systems performed. The EDR is

– CONTINUED –

designed to record data related to vehicle dynamics and safety systems for a short period of time, typically 30 seconds or less. The EDR in this vehicle is designed to record such data as:

- How various systems in your vehicle were operating;
- Whether or not the driver and passenger safety belts were buckled/fastened;
- How far (if at all) the driver was depressing the accelerator and/or brake pedal; and,
- How fast the vehicle was traveling.

These data can help provide a better understanding of the circumstances in which crashes and injuries occur. NOTE: EDR data are recorded by your vehicle only if a non-trivial crash situation occurs; no data are recorded by the EDR under normal driving conditions and no personal data (e.g., name, gender, age, and crash location) are recorded. However, other parties, such as law enforcement, could combine the EDR data with the type of personally identifying data routinely acquired during a crash investigation.

To read data recorded by an EDR, special equipment is required, and access to the vehicle or the EDR is needed. In addition to the vehicle manufacturer, other parties, such as law enforcement, that have the special equipment, can read the information if they have access to the vehicle or the EDR.

- Exterior 14
- Interior 16
- Instrument Panel 19
- Steering Wheel 20
- Light Control and Wiper Control Levers/ Switches 21
- Combination Meter 22
  - U.S.-Spec. Models 22
  - Canada-Spec. Models 23
- Warning and Indicator Lights 24

Exterior

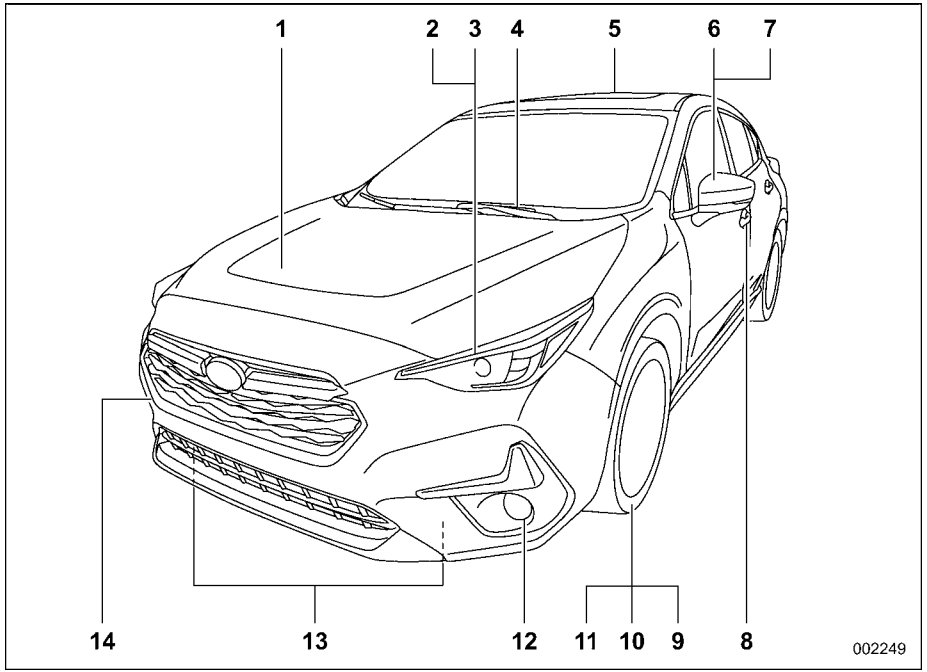

1 Engine hood (page 448)
2 Headlights (page 229, 481)
3 Turn signal lights (page 239, 481)
4 Windshield wipers (page 241, 473)
5 Moonroof (page 139)
6 Outside mirrors (page 255)
7 Side turn signal lights (page 239, 481)
8 Door locks (page 127)
9 Tire pressure (page 463)
10 Flat tires (page 407)
11 Tire chains (page 400)
12 Fog lights (page 238, 481)
13 Tie-down hooks (page 421)
14 Towing hook (page 421)

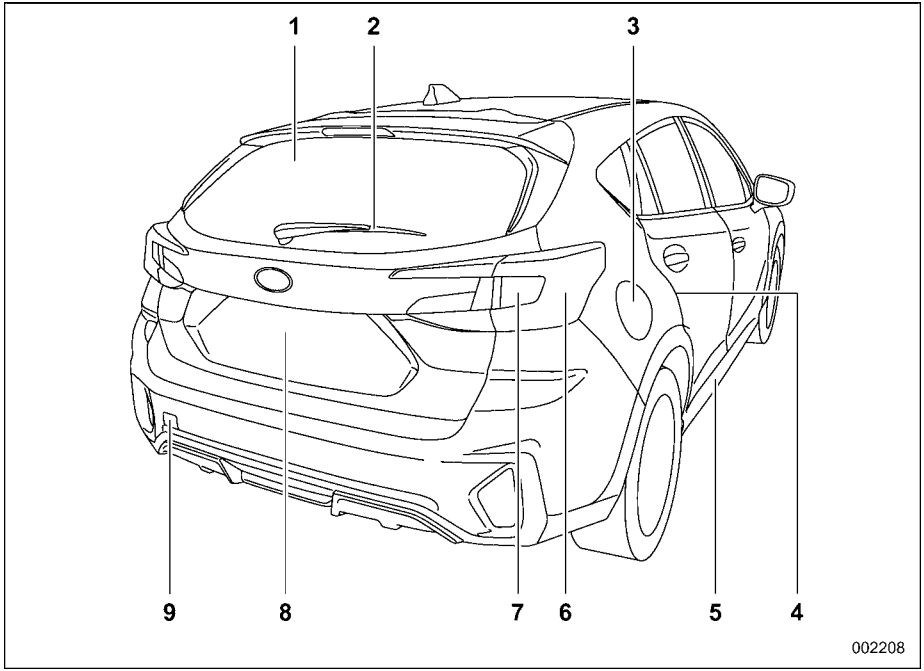

1 Rear window defogger (page 243)
2 Rear wiper (page 242)
3 Fuel filler lid and cap (page 306)
4 Child safety locks (page 134)
5 Tie-down holes (page 421)
6 Lights (page 229, 481)
7 Turn signal lights (page 239, 481)
8 Rear gate (page 137)
9 Towing hook (page 421)

Interior

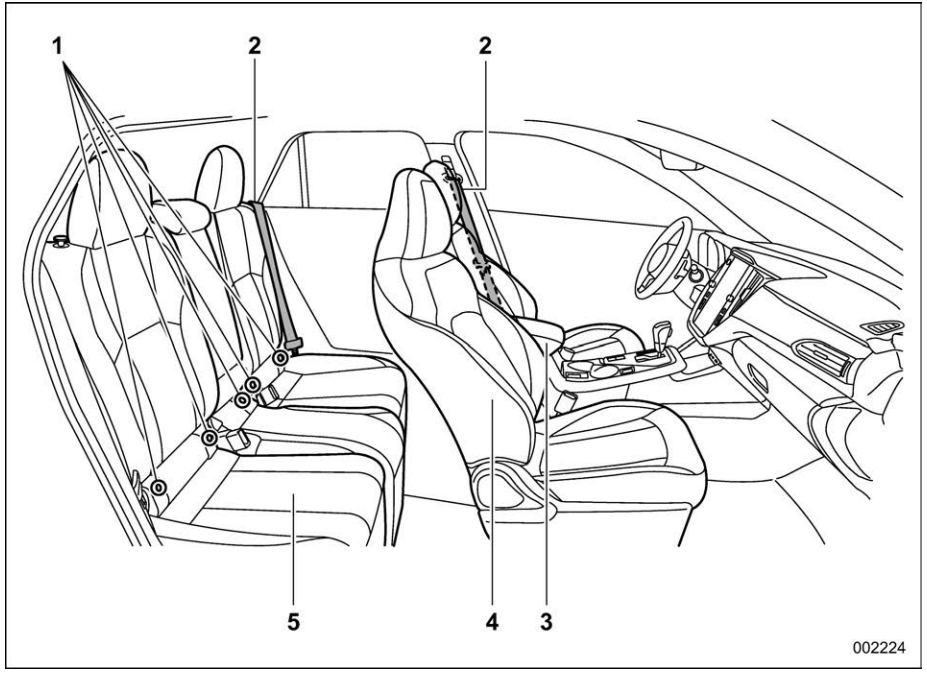

1 Lower anchorages for child restraint system (page 65)
- **U.S.-spec. models:** 5 lower anchorages
- **Canada-spec. models:** 4 lower anchorages

2 Seatbelts (page 39)
3 Center console (page 284)
4 Front seats (page 28)
5 Rear seats (page 34)

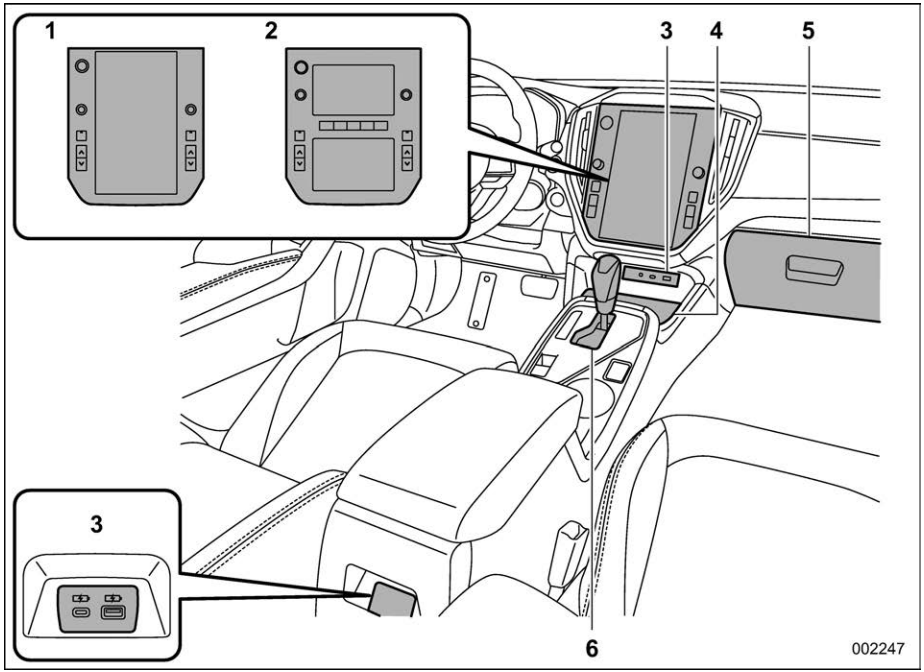

1 11.6-inch display models*1 (page 188)/Climate control (page 263)/Audio*2/Navigation system*2
2 Dual 7.0-inch display models*1 (page 211)/Climate control (page 261)/Audio*2
3 USB power supply (page 287)/AUX*2
4 Wireless charger (page 289)
5 Glove box (page 283)
6 Select lever (page 324)

*1: Center information display

*2: For details about how to use the audio and navigation system (if equipped), refer to the separate navigation/audio Owner's Manual.

– CONTINUED –

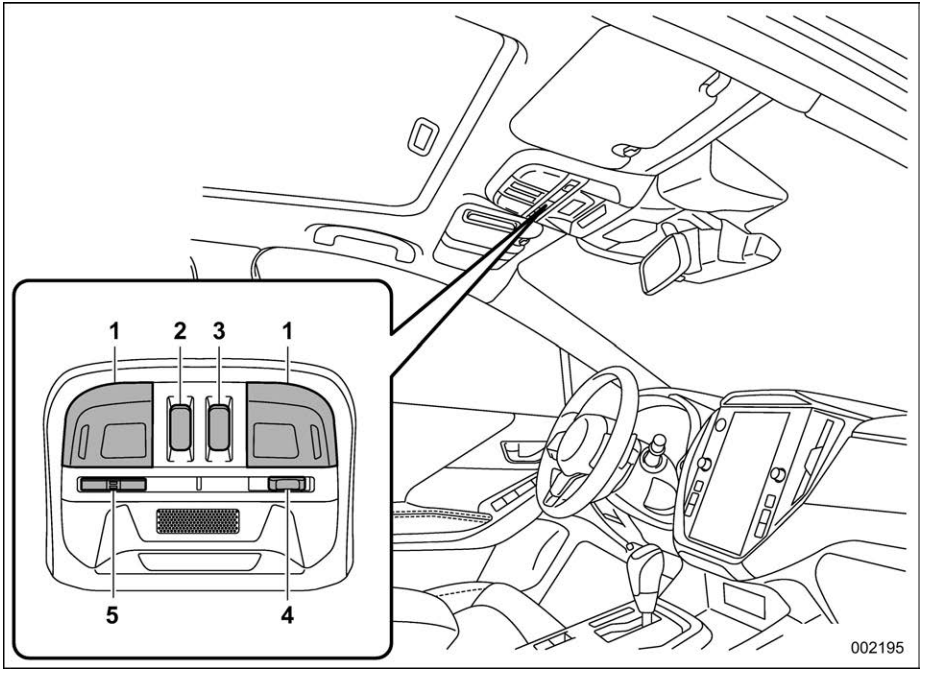

1 Map light switches (page 280)
2 Moonroof tilt switch (page 140)
3 Moonroof slide switch (page 140)
4 Door interlock switch (page 280)
5 Buttons for SUBARU STARLINK Safety and Security

NOTE

For models with SUBARU STARLINK Safety and Security: Refer to the Owner's Manual supplement for "SUBARU STARLINK Safety and Security".

Instrument Panel

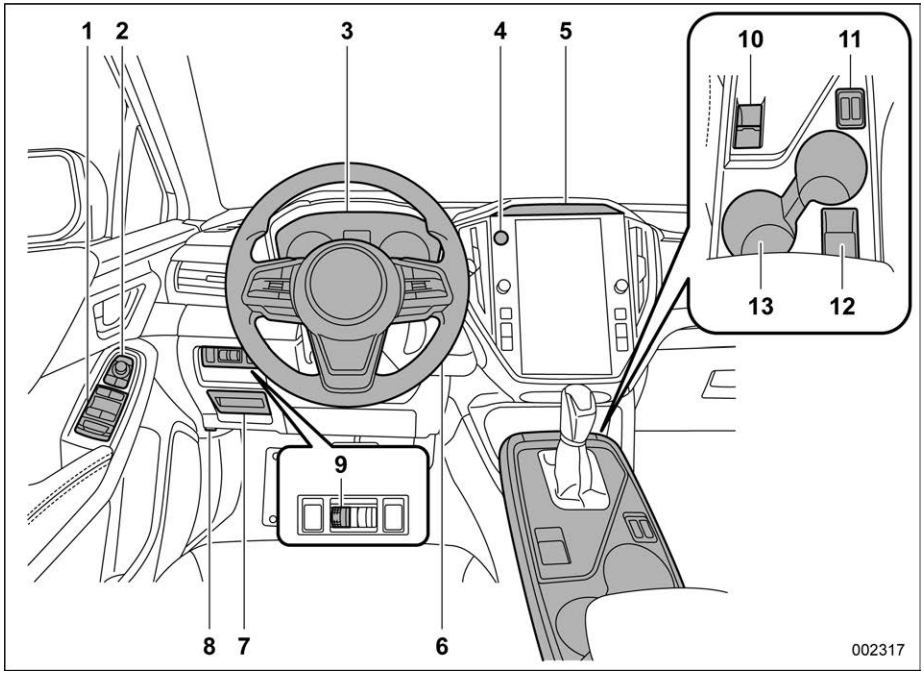

1 Power window switches (page 134)
2 Remote control mirror switch (page 255)
3 Combination meter (page 150)
4 Hazard warning flasher switch (page 150)
5 Camera for Driver Monitoring System (page 378)
6 Tilt/Telescopic steering (page 256)
7 Fuse box (page 479)
8 Hood release knob (page 448)
9 Illumination brightness control dial (page 153)
10 Electronic parking brake switch (page 340)
11 Seat heater switches (page 33)
12 Accessory power outlet (page 286)
13 Cup holder (page 285)

Steering Wheel

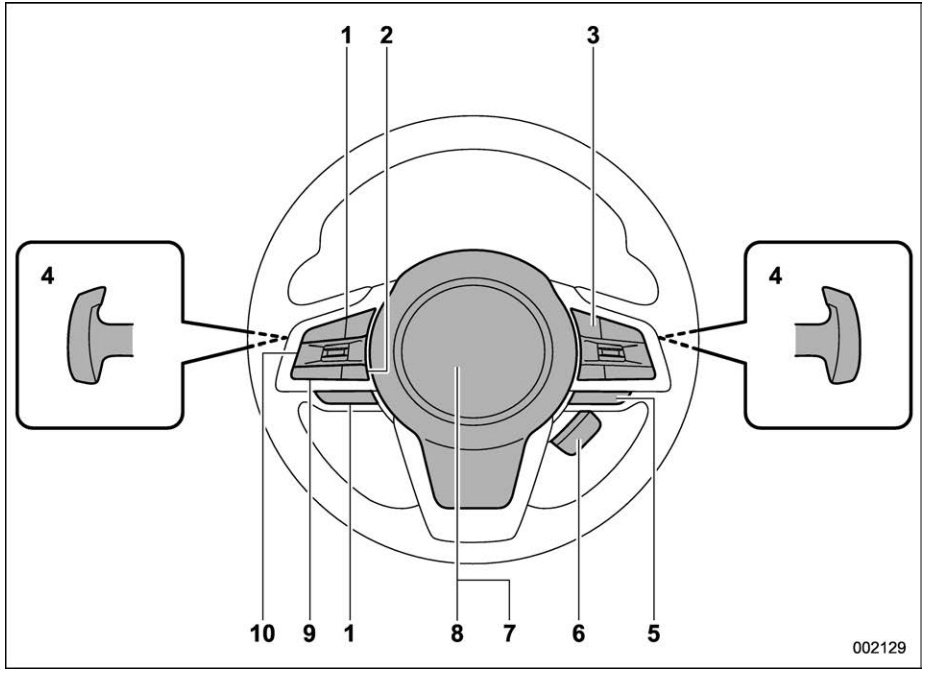

1 Audio control switch*1
2 Talk switch for voice command system*1
3 Cruise control switches*2
4 Shift paddles (page 328)
5 SI-DRIVE switch (page 330)
6 Heated Steering Wheel switch (page 256)
7 SRS airbag (page 71)
8 Horn (page 257)
9 Hands-free phone switch*1
10 Control switches for combination meter display (color LCD) (page 178)

*1: For details about how to use the switches, refer to the separate navigation/audio Owner's Manual.

*2: For details about how to use the switches, refer to the Owner's Manual supplement for the EyeSight system.

Light Control and Wiper Control Levers/Switches

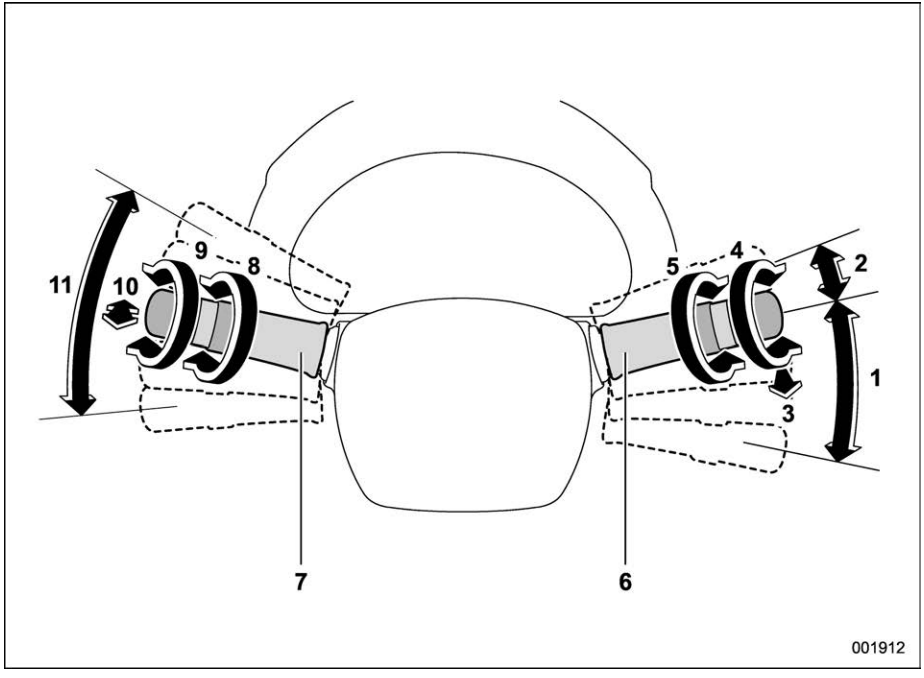

1 Windshield wiper (page 240)
2 Mist (page 241)
3 Windshield washer (page 242)
4 Rear window wiper and washer switch (page 242)
5 Wiper intermittent time control switch (page 241)
6 Wiper control lever (page 241)
7 Light control switch (page 229)
8 Fog light switch (page 238)
9 Headlight ON/OFF/AUTO (page 230)
10 Headlight flasher High/Low beam change (page 233)
11 Turn signal lever (page 239)

Combination Meter

■ U.S.-Spec. Models

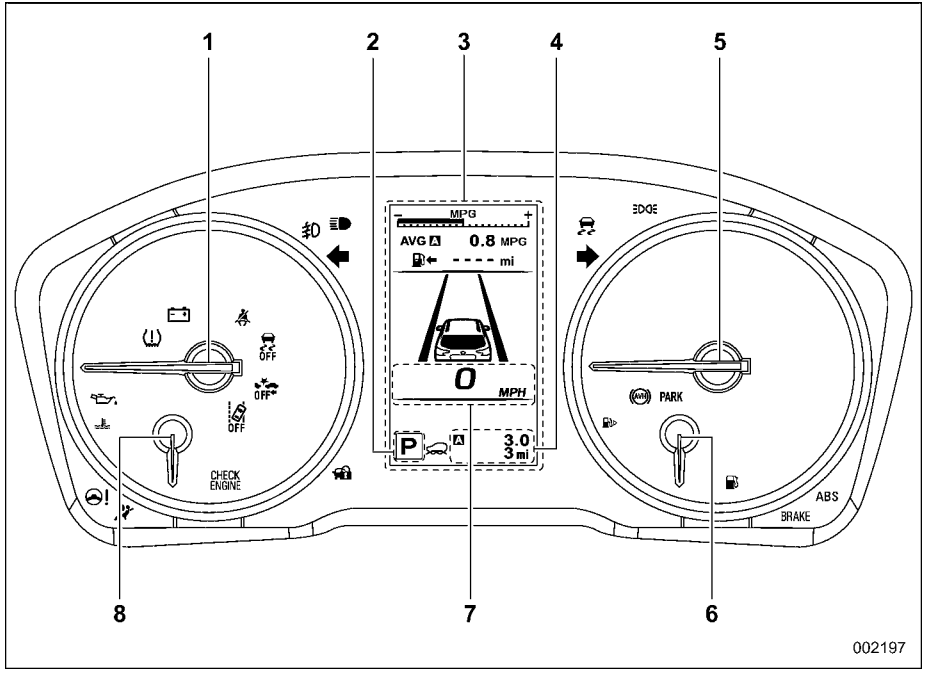

1 Tachometer (page 151)
2 Select lever/gear position indicator (page 174)
3 Combination meter display (color LCD) (page 177)
4 Trip meter and odometer (page 151)
5 Speedometer (page 150)
6 Fuel gauge (page 152)
7 Digital speed screen (page 185)
8 Engine coolant temperature gauge (page 152)

■ Canada-Spec. Models

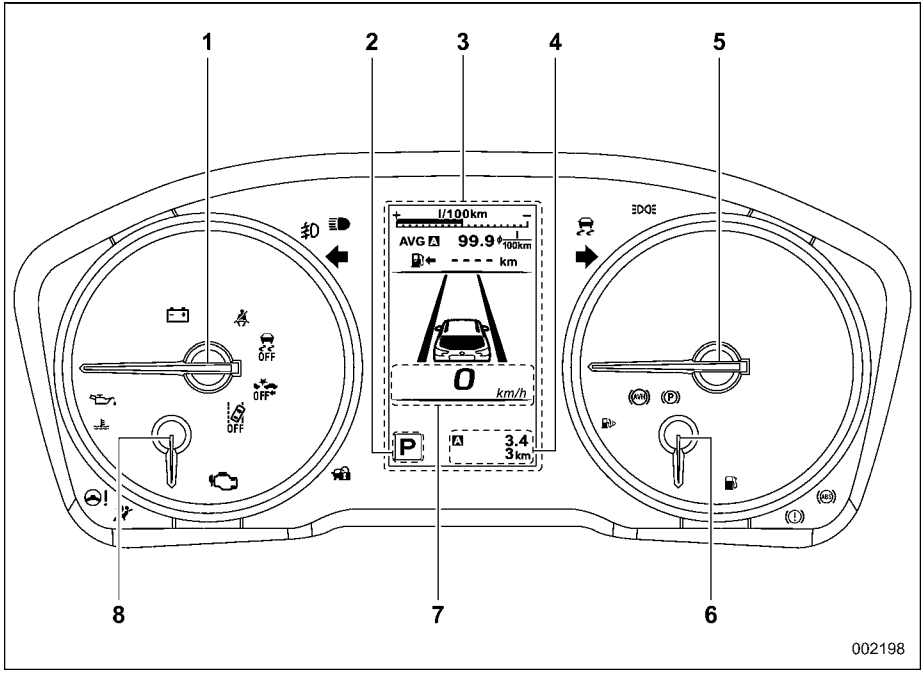

1 Tachometer (page 151)
2 Select lever/gear position indicator (page 174)
3 Combination meter display (color LCD) (page 177)
4 Trip meter and odometer (page 151)
5 Speedometer (page 150)
6 Fuel gauge (page 152)
7 Digital speed screen (page 185)
8 Engine coolant temperature gauge (page 152)

Warning and Indicator Lights

Mark	Name	Page
	Seatbelt warning light	155
	Front passenger's seatbelt warning light	155
	Rear seatbelt warning light	157
	SRS airbag system warning light	158
ON	Front passenger's frontal airbag ON indicator light	158
OFF	Front passenger's frontal airbag OFF indicator light	158
CHECK ENGINE /	CHECK ENGINE warning light/Malfunction indicator light	159
	Charge warning light	160
	Oil pressure warning light	160
	Engine low oil level warning light	160

Mark	Name	Page
AT OIL TEMP	AT OIL TEMP warning light	160
ABS / (ABS)	ABS warning light	162
BRAKE / (!)	Brake system warning light	163
PARK / (P)	Electronic parking brake indicator light	164
	Door open indicator light	166
	Engine hood open warning light	166
	Low fuel warning light	165
AWD	All-Wheel Drive warning light	166
	Power steering warning light	166
(AVH)	Auto Vehicle Hold indicator light	165

Mark	Name	Page
	Vehicle Dynamics Control warning light/Vehicle Dynamics Control operation indicator light	167
OFF	Vehicle Dynamics Control OFF indicator light	168
	Access key warning indicator (if equipped)	168
	Security indicator light	173
	Turn signal indicator lights	174
	High beam indicator light	174
	High beam assist indicator	174
	Automatic headlight beam leveler warning light	174
	LED headlight warning light	175
SRH OFF	Steering Responsive Headlight OFF indicator light	175

Mark	Name	Page
SRH	Steering Responsive Headlight warning light	175
	Front fog light indicator light (if equipped)	175
	Headlight indicator light	175
	Low tire pressure warning light (U.S.-spec. models)	161
	Windshield washer fluid warning light	166
A OFF	Auto Start Stop OFF indicator light	175
A	Auto Start Stop indicator light (green)	175
	Auto Start Stop warning light (yellow)	175
A	Auto Start Stop No Activity Detected indicator light	176
	BSD/RCTA warning indicator (if equipped)	176
OFF	BSD/RCTA OFF indicator (if equipped)	176
[I]	Intelligent (I) mode indicator (if equipped)	174

Mark	Name	Page
[S]	Sport (S) mode indicator (if equipped)	174
	Icy road surface warning indicator	176
RAB	RAB warning indicator (if equipped)	176
RAB OFF	RAB OFF indicator (if equipped)	176
P OFF	Sonar Audible Alarm OFF indicator (if equipped)	176
	Driver Monitoring System operation indicator light (green) (if equipped)	177
	Driver Monitoring System warning light (yellow) (if equipped)	177
OFF	Driver Monitoring System OFF indicator light (if equipped)	177
	Driver Monitoring System temporary stop indicator light (if equipped)	177

1-1. Front Seats 28
Power Seat (If Equipped) 30
Manual Seat (If Equipped) 31
Head Restraint Adjustment 32
1-2. Seat Heater (If Equipped) 33
1-3. Rear Seats 34
Folding Down the Rear Seatback 35
Head Restraint Adjustment 37
Armrest (If Equipped) 38
1-4. Seatbelts 39
Seatbelt Safety Tips 39
Emergency Locking Retractor (ELR) 40
Automatic Locking Retractor/Emergency Locking Retractor (ALR/ELR) 40
Seatbelt Warning Light and Chime 41
Fastening the Seatbelt 41
Seatbelt Maintenance 48
1-5. Seatbelt Extender 48
1-6. Seatbelt Pretensioners 50
Seatbelt with Shoulder Belt Pretensioner 51
Seatbelt with Shoulder Belt and Lap Belt Pretensioners 51
System Monitors 52
System Servicing 52
Precautions against Vehicle Modification 53
1-7. Rear Seat Reminder 53
1-8. Child Restraint Systems 54
Safety Precautions 54
Safety Tips for Installing Child Restraint Systems 56
Choosing a Child Restraint System 57
When Installing the Forward Facing Child Restraint System on the Front Passenger's Seat 58
Installing Child Restraint Systems with ALR/ELR Seatbelt 59
Installing a Booster Seat or Booster Cushion 63
Installation of Child Restraint Systems by Use of Lower and Tether Anchorages (LATCH) 65
Tether Anchorages 70
1-9. SRS Airbag (Supplemental Restraint System Airbag) 71
General Precautions Regarding SRS Airbag System 71
General Precautions Regarding SRS Airbag System for Accessories and Any Objects 73
General Precautions Regarding SRS Airbag System and Children 76
Components 78
SUBARU Advanced Frontal Airbag System 80
SRS Side Airbag and SRS Curtain Airbag 92
SRS Airbag System Monitors 99
SRS Airbag System Servicing 100
Precautions against Vehicle Modification 101
How to Contact the Vehicle Manufacturer concerning Modifications for Persons with Disabilities That May Affect the Advanced Airbag System 102

1-1. Front Seats

WARNING

- **Never adjust the seat while driving, as personal injury or loss of vehicle control may occur.**
- **Before adjusting the seat, ensure nothing is blocking the adjusting mechanism.**
- **After adjusting the seat, move it back and forth to ensure the seat is securely locked. If it is not, it may move suddenly or the seatbelt may not operate properly.**
- **Do not put objects under the front seats. They may interfere with front seat locking mechanism and cause an accident.**
- **Seatbelts provide maximum restraint when the occupant sits back and upright in the seat. To reduce the risk of sliding under the seatbelt in a collision, the front seatbacks should always be used in the upright position while the vehicle is running. If the front seatbacks are not in the upright position and a collision occurs, the risk of sliding under the lap belt and of the lap belt sliding up over the abdomen will increase, and both can result in serious injury or death.**
- **The SRS airbags deploy with considerable speed and force. Occupants who are not seated in the proper upright position when the SRS airbag deploys could suffer very serious injuries. Because the SRS airbag needs enough space for deployment, the driver should always sit upright and well back in the seat as far from the steering wheel as practical while still maintaining full vehicle control, and the front passenger should move the seat as far back as possible and sit upright and well back in the seat.**

WARNING

- **NEVER INSTALL A REARWARD FACING CHILD RESTRAINT SYSTEM ON THE FRONT PASSENGER'S SEAT. DOING SO RISKS SERIOUS INJURY OR DEATH TO THE CHILD BY PLACING THE CHILD'S HEAD TOO CLOSE TO THE SRS AIRBAG.**
- **SUBARU strongly recommends that ALL infants and children (including those in child restraint systems) sit in the REAR seat properly restrained in a child restraint system or in a seatbelt, whichever is appropriate for the child's age, height and weight.**

The SRS airbag deploys with considerable speed and force and can injure or even kill children, especially if they are not restrained or improperly restrained. Because children are lighter and weaker than adults, their risk of being injured from deployment is greater. According to accident statistics, children are safer when properly restrained in the rear seating positions than in the front seating positions. For instructions and precautions concerning child restraint systems, refer to "Child Restraint Systems" ☞P54.

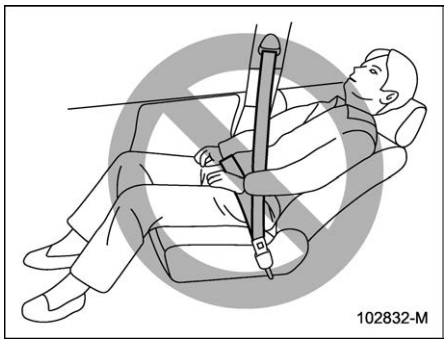

⚠ WARNING

To prevent the passenger from sliding under the seatbelt in the event of a collision, always put the seatback in the upright position while the vehicle is in motion. Also, do not place objects such as cushions between the passenger and the seatback. If you do so, the risk of sliding under the lap belt and of the lap belt sliding up over the abdomen will increase, and both can result in serious injury or death.

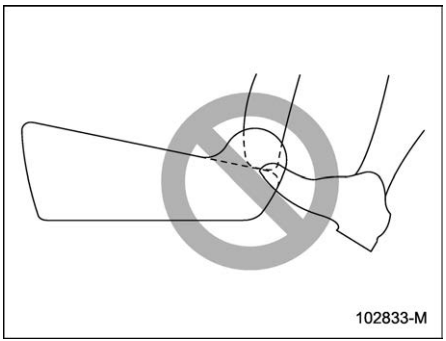

⚠ WARNING

Do not let rear passengers rest their feet between the front seatback and seat cushion. Doing so may interfere with the proper operation of the following systems and could result in serious injury.

- **Occupant detection system**
- **SRS side airbag**
- **SRS seat cushion airbag**
- **Front seat heater (if equipped)**
- **Power seat (if equipped)**

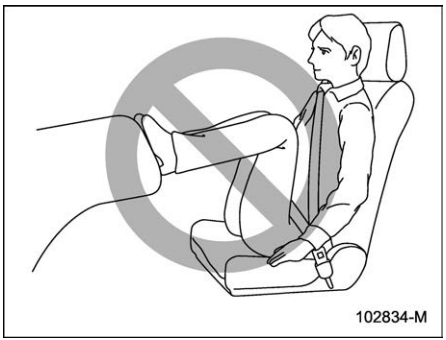

– CONTINUED –

WARNING

Do not press your feet onto the instrument panel. Doing so may prevent the occupant detection function of the SRS airbag system and SRS airbag from functioning correctly. This may result in serious injury or death in the event of an accident.

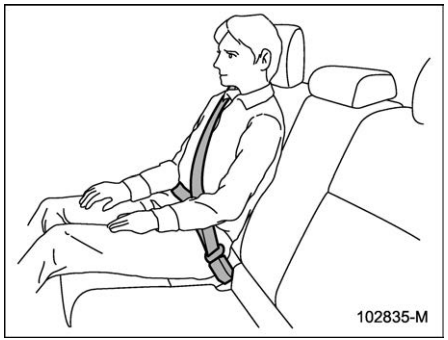

WARNING

Seatbelts provide maximum restraint when the occupant sits well back and upright in the seat. Do not put cushions or any other materials between occupants and seatbacks or seat cushions. If you do so, the risk of sliding under the lap belt and of the lap belt sliding up over the abdomen will increase, and both can result in serious internal injury or death.

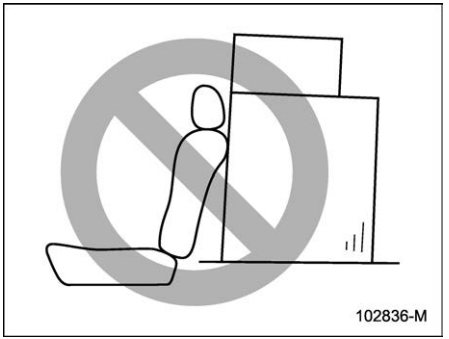

WARNING

Never stack luggage or other cargo higher than the top of the seatback because it could tumble forward and injure passengers in the event of a sudden stop or accident.

■ Power Seat (If Equipped)

▼ Driver's seat

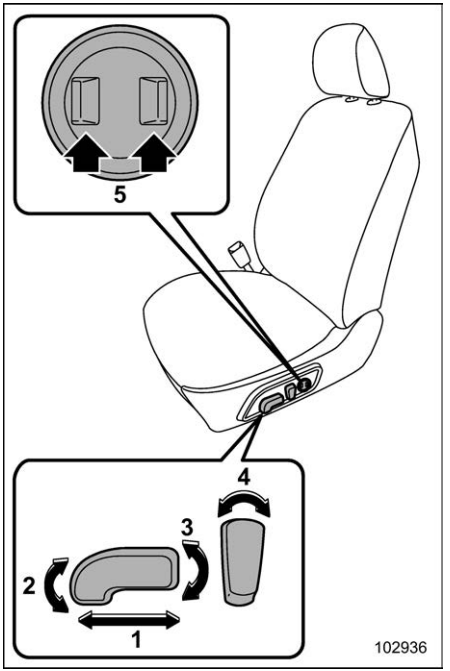

1 **Seat position forward/backward control switch**
To adjust the seat forward or backward, move the control switch forward or

backward. During forward/backward adjustment of the seat, you cannot adjust the seat cushion angle or seat cushion height.

2 **Seat cushion angle control switch**
To adjust the seat cushion angle, pull up or push down the front end of the control switch.

3 **Seat height control switch**
To adjust the seat height, pull up or push down the rear end of the control switch.

4 **Seatback angle (reclining) control switch**
To adjust the angle of the seatback, move the control switch.

5 **Lumbar support control switch**
To increase lower back support, push the front side of the switch. To decrease lower back support, push the rear side of the switch.

■ Manual Seat (If Equipped)

▼ Forward and backward adjustment

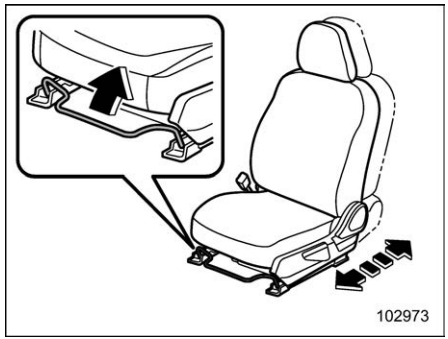

1. Sit in the seat to adjust.
2. Pull the lever upward, slide the seat to the desired position, and then release the lever.
3. Try to move the seat back and forth to make sure that it is securely locked into place.

▼ Reclining the seatback

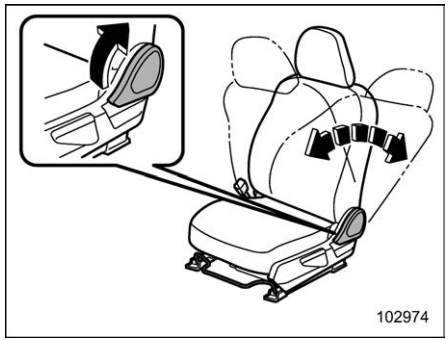

1. Pull up the reclining lever, adjust the seatback to the desired position, and then release the lever.
2. Make sure the seatback is securely locked into place.

The seatback placed in a reclined position can spring back upward with force when pulling up the lever. While operating the lever to return the seatback, hold the seatback lightly so that it may be raised back gradually.

– CONTINUED –

▼ **Seat height adjustment (driver's seat)**

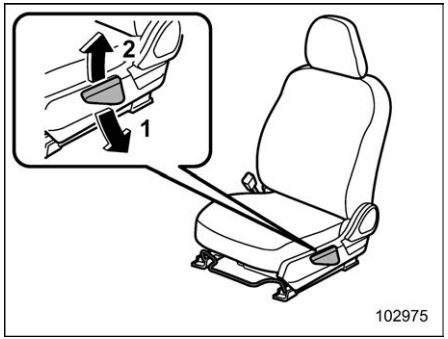

1 When the lever is pushed down, the seat is lowered.
2 When the lever is pulled up, the seat rises.

The height of the seat can be adjusted by moving the seat adjustment lever up and down.

■ Head Restraint Adjustment

⚠ WARNING

- **Never drive the vehicle with the head restraints removed because they are designed to reduce the risk of serious neck injury in the event that the vehicle is struck from the rear. Also, never install the head restraints backwards. Doing so will prevent the head restraints from functioning as intended. Therefore, when the head restraints are removed, all head restraints must be reinstalled properly to protect vehicle occupants.**
- **All occupants, including the driver, should not operate a vehicle or sit in a vehicle's seat until the head restraints are placed in their proper positions in order to minimize the risk of neck injury in the event of a crash.**
- **The front seat head restraints are designed to be installed into the front seats only. The rear seat head restraints are designed to be installed into the rear seats only. Do not attempt to install the front seat head restraints into the rear seats, or the rear seat head restraints into the front seats.**

Both the driver's seat and front passenger's seat are equipped with head restraints. Both head restraints are adjustable in the following ways.

▼ **Head restraint height adjustment**

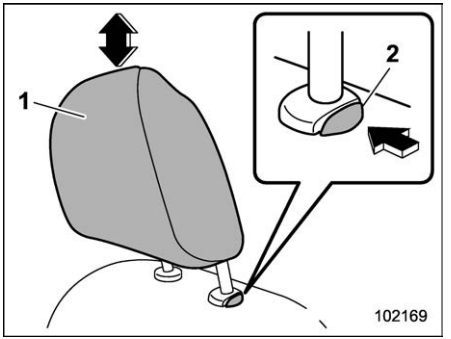

1 Head restraint
2 Release button

To raise:

Pull the head restraint up.

To lower:

Push the head restraint down while pressing the release button on the top of the seatback.

To remove:

While pressing the release button, pull out the head restraint.

To install:

Install the head restraint into the holes that are located on the top of the seatback until the head restraint locks. Press and hold the release button to lower the head restraint.

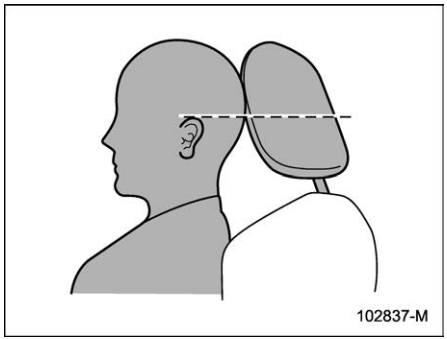

Each head restraint should be adjusted so that the center of the head restraint is closest to the top of the occupant's ears.

NOTE

It is not possible to remove or install the head restraint without reclining the front seatback. Reclining the front seatback and then remove or install the head restraint.

1-2. Seat Heater (If Equipped)

The seat heater is equipped in the front seats.

The seat heater operates when the ignition switch is either in the "ACC" or "ON" position.

CAUTION

- **Do not put hard or heavy objects or ones with protrusions on the seat, and do not stab the seat with sharp objects, such as pins or needles.**
- **People with delicate skin may suffer slight burns even at low temperatures if they use the seat heater for a long period of time. When using the heater, always be sure to warn the persons concerned.**
- **Do not put anything on the seat which insulates against heat, such as a blanket, cushion, or similar items. This may cause the seat heater to overheat.**
- **When the seat is warmed enough or before you leave the vehicle, be sure to turn off the seat heater.**

NOTE

Use of the seat heater for a long period of time while the engine is not running can cause battery discharge.

– CONTINUED –

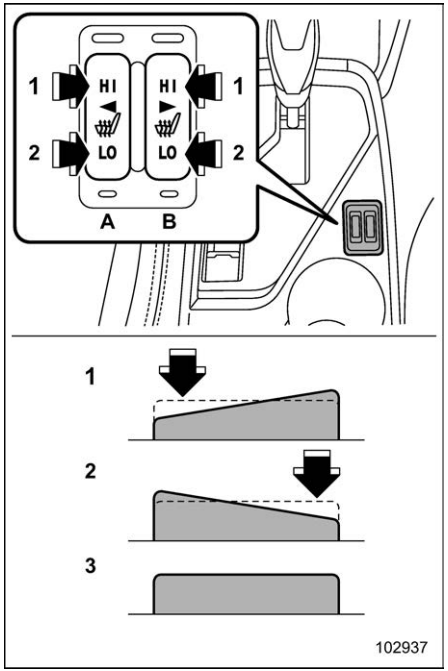

1 **HI** – Rapid heating
2 **LO** – Normal heating
3 Off
A Left-hand side
B Right-hand side

To turn on the seat heater, push the “LO” or “HI” position on the switch, as desired, depending on the temperature.

Selecting the “HI” position will cause the seat to heat up quicker.

To turn off the seat heater, lightly press the opposite side of the current position.

The indicator located on the switch illuminates when the seat heater is in operation.

1-3. Rear Seats

WARNING

Seatbelts provide maximum restraint when the occupant sits back and upright in the seat. Do not place cushions or any other materials between occupants and seatbacks or seat cushions. By doing so, the risk of sliding under the lap belt and of the lap belt sliding up over the abdomen will increase, and both can result in serious internal injury or death.

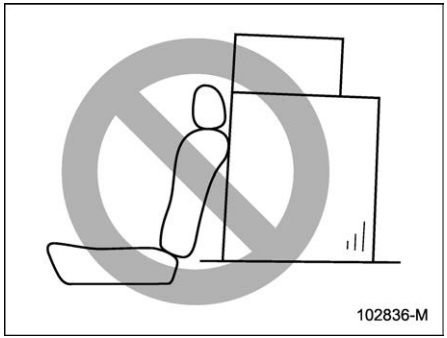

WARNING

Never stack luggage or other cargo higher than the top of the seatback as it could tumble forward and injure passengers in the event of a sudden stop or accident.

Folding Down the Rear Seatback

WARNING

- **When you fold down the seatback, check that there are no passengers or objects on the rear seat. Not doing so creates a risk of injury or property damage if the seatback suddenly folds down.**
- **Never allow passengers to ride on the folded rear seatback or in the cargo area. Doing so may result in serious injury or death.**
- **Secure all objects and especially long items properly to prevent them from being thrown around inside the vehicle and causing serious injury during a sudden stop, a sudden steering maneuver or a rapid acceleration.**
- **When you return the seatback to its original position, shake the seatback slightly to confirm that it is securely fixed in place. If the seatback is not securely fixed in place, the seatback may suddenly fold down in the event of sudden braking, or objects may move out from the cargo area, which could cause serious injury or death.**

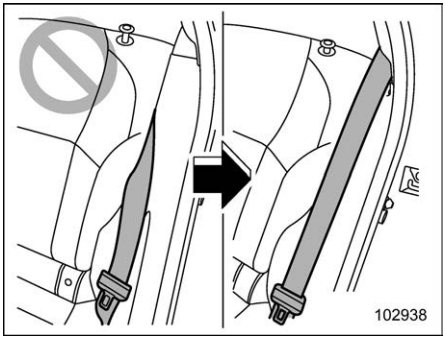

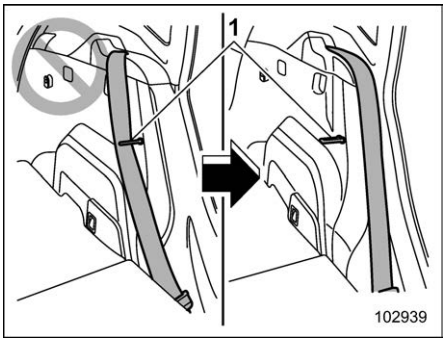

1 Striker

– CONTINUED –

WARNING

When the seatback is returned to its original position, observe the following precautions. Failure to do so may lead to serious injury or an accident because the operation efficiency of the seatbelt is inhibited.

- **The seatbelt should not be caught in the seatback and it should be fully visible.**
- **The seatbelt should not pass behind the striker for the seatback.**

CAUTION

Do not hang luggage etc. on the striker. The possibility exists that the seatback may not be able to be fixed firmly in place. This could lead to unexpected accidents

▼ Folding down the rear seatback

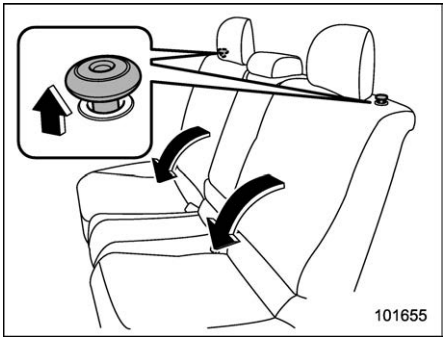

Lock release knobs

1. Lower the head restraints.
2. Unlock the seatback by pulling the lock release knob then fold the seatback down.

▼ Return the rear seatback

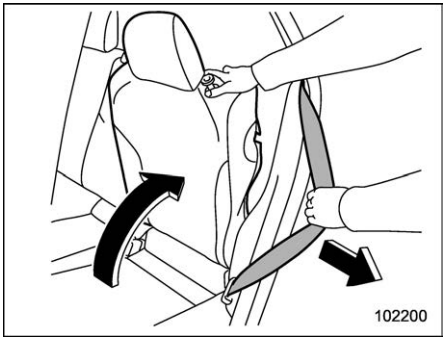

WARNING

- **When returning the seatback to its original position, observe the following precaution.**

  Failure to observe the precaution may damage the seatbelt, impairing its effectiveness, and possibly result in a serious injury.
- **When returning the seatback to its original position, pull the seatbelt out towards the vehicle exterior so that it will not be caught between the seatback and the trim.**

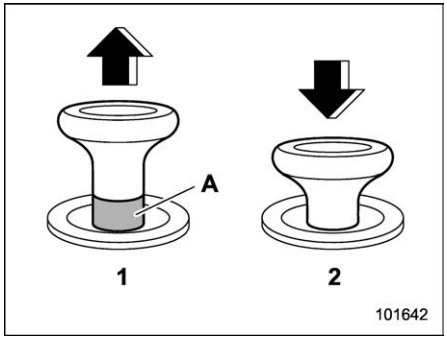

Lock release knob
1 Unlocked
2 Locked
A Unlocking marker in red

To return the seatback to its original position, raise the seatback until it locks into place and make sure that the unlocking marker on the lock release knob is no longer visible.

WARNING

When you return the seatback to its original position, check that the unlocking marker on the lock release knob is not visible. Also, shake the seatback slightly to confirm that it is securely fixed in place. If the seatback is not securely fixed in place, the seatback may suddenly fold down in the event of sudden braking, or objects may move out from the cargo area, which could cause serious injury or death.

■ Head Restraint Adjustment

Both the rear window side seats and the rear center seat are equipped with head restraints.

WARNING

- **Never drive the vehicle with the head restraints removed because they are designed to reduce the risk of serious neck injury in the event that the vehicle is struck from the rear. Therefore, when the head restraints are removed, all head restraints must be reinstalled properly to protect vehicle occupants.**
- **All occupants, including the driver, should not operate a vehicle or sit in a vehicle's seat until the head restraints are placed in their proper positions in order to minimize the risk of neck injury in the event of a crash.**
- **The front seat head restraints are designed to be installed into the front seats only. The rear seat head restraints are designed to be installed into the rear seats only. Do not attempt to install the front seat head restraints into the rear seats, or the rear seat head restraints into the front seats.**

▼ Rear windows side seating position

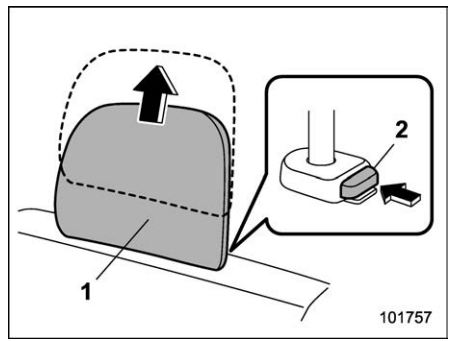

1 Head restraint
2 Release button

To remove:

While pressing the release button, pull out the head restraint.

To install:

Install the head restraint into the holes that are located on the top of the seatback until the head restraint locks. Press and hold

– CONTINUED –

the release button to lower the head restraint.

After installing the head restraint, make sure it is securely locked.

NOTE

When the head restraint cannot be pulled out or installed due to insufficient clearance between the head restraint and the roof, tilt the seat and then perform the installation and removal tasks.

▼ **Rear center seating position**

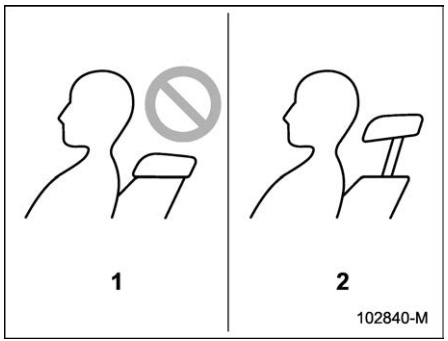

1 Incorrect (retracted position)
2 Correct (extended position)

⚠ CAUTION

The head restraint is not intended to be used in the retracted position. Before sitting on the seat, raise the head restraint to the extended position.

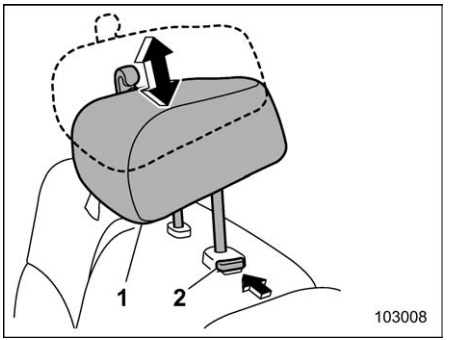

1 Head restraint
2 Release button

To raise:

Pull the head restraint up.

To lower:

Push the head restraint down while pressing the release button on the top of the seatback.

To remove:

While pressing the release button, pull out the head restraint.

To install:

Install the head restraint into the holes that are located on the top of the seatback until the head restraint locks. Press and hold the release button to lower the head restraint.

When the rear-center seating position is occupied, raise the head restraint to the extended position. When the rear center seating position is not occupied, lower the head restraint to improve rearward visibility.

■ Armrest (If Equipped)

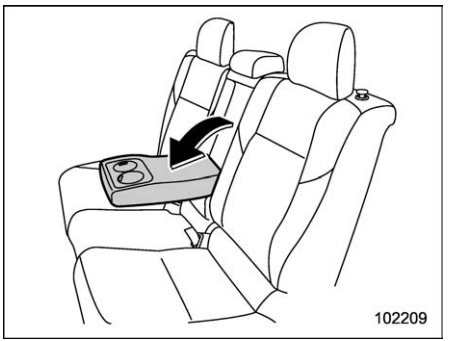

To lower the armrest, pull the armrest's top edge.

WARNING

- **Make sure to have the rear passengers wear the seatbelts before lowering the armrest. If the rear passengers wear the seatbelts after lowering the armrest, seatbelts cannot provide maximum restraint, causing serious injuries.**
- **To avoid serious injury, never allow passengers to sit on the center armrest while the vehicle is in motion.**

1-4. Seatbelts

■ Seatbelt Safety Tips

WARNING

- **All persons in the vehicle must fasten their seatbelts BEFORE the vehicle starts to move. Otherwise, the possibility of serious injury becomes greater in the event of a sudden stop or accident.**
- **All belts should fit snugly in order to provide full restraint. Loose fitting belts are not as effective in preventing or reducing injury.**
- **Each seatbelt is designed to support only one person. Never use a single belt for two or more persons – even children. Otherwise, in an accident, serious injury or death could result.**
- **Replace all seatbelt assemblies including retractors and attaching hardware worn by occupants of a vehicle that has been in a serious accident. The entire assembly should be replaced even if damage is not obvious.**
- **NEVER INSTALL A REARWARD FACING CHILD RESTRAINT SYSTEM ON THE FRONT PASSENGER'S SEAT. DOING SO RISKS SERIOUS INJURY OR DEATH TO THE CHILD BY PLACING THE CHILD'S HEAD TOO CLOSE TO THE SRS AIRBAG.**
- **SUBARU strongly recommends that ALL infants and children (including those in child restraint systems) sit in the REAR seat properly restrained in a child restraint system or in a seatbelt, whichever is appropriate for the child's age, height and weight. The SRS airbag deploys with considerable speed and force and can injure or even kill children, especially if they are not restrained or improperly restrained. Because children are lighter and weaker than adults, their risk of being injured from deployment is greater. According to accident statistics, children are safer when properly restrained in the rear seating positions than in the front seating positions. For instructions and precautions concerning child restraint systems, refer to "Child Restraint Systems" ☞P54.**

– CONTINUED –

This vehicle is equipped with a crash sensing and diagnostic module, which will record whether the seatbelt is in use by the front passenger when an SRS frontal, side or curtain airbag deploys.

▼ Infants or small children

Use a child restraint system that is suitable for this vehicle. Refer to “Child Restraint Systems” ☞P54.

▼ Children

If a child is too big for a child restraint system, the child should sit in the rear seat and be restrained using the seatbelts. According to accident statistics, children are safer when properly restrained in the rear seating positions than in the front seating positions. Never allow a child to stand up or kneel on the seat.

If the shoulder portion of the belt crosses the face or neck, move the child closer to the belt buckle to help provide a good shoulder belt fit. Care must be taken to securely place the lap belt as low as possible on the hips and not on the child’s waist. If the shoulder portion of the belt cannot be properly positioned, a child restraint system should be used. Never place the shoulder belt under the child’s arm or behind the child’s back.

▼ Expectant mothers

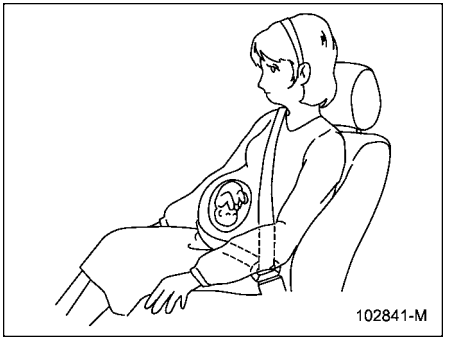

Expectant mothers also need to use the seatbelts. They should consult their doctor for specific recommendations. The lap belt should be worn securely and as low as possible over the hips, not over the waist.

■ Emergency Locking Retractor (ELR)

The driver’s seatbelt has an Emergency Locking Retractor (ELR).

The emergency locking retractor allows normal body movement but the retractor locks automatically during a sudden stop, impact or if you pull the belt very quickly out of the retractor.

■ Automatic Locking Retractor/ Emergency Locking Retractor (ALR/ELR)

Each passenger’s seatbelt has an Automatic Locking Retractor/Emergency Locking Retractor (ALR/ELR). The Automatic Locking Retractor/Emergency Locking Retractor normally functions as an Emergency Locking Retractor (ELR). The ALR/ELR has an additional locking mode, “Automatic Locking Retractor (ALR) mode”, intended to secure a child restraint system.

The ALR mode functions as follows.

When the seatbelt is once drawn out completely and is then retracted even slightly, the retractor locks the seatbelt in that position and the seatbelt cannot be extended. As the belt is rewinding, clicks will be heard which indicate the retractor functions as an ALR. When the seatbelt is retracted fully, the ALR mode is canceled and the ELR mode is restored.

When securing a child restraint system on the rear seats by using a seatbelt, the seatbelt must be changed over to the Automatic Locking Retractor (ALR) mode. For instructions on how to install the child restraint system using a seatbelt, refer to “Installing Child Restraint Systems with ALR/ELR Seatbelt” ☞P59.

When the child restraint system is removed, make sure that the retractor is restored to the Emergency Locking Retractor (ELR) mode by allowing the seatbelt to retract fully.

■ Seatbelt Warning Light and Chime

Refer to “Seatbelt Warning Light and Chime” ☞P155.

■ Fastening the Seatbelt

⚠ WARNING

- **Never use a belt that is twisted or reversed. In an accident, this can increase the risk or severity of injury.**
- **Keep the lap belt as low as possible on your hips. In a collision, this spreads the force of the lap belt over stronger hip bones instead of across the weaker abdomen.**
- **Seatbelts provide maximum restraint when the occupant sits well back and upright in the seat. To reduce the risk of sliding under the seatbelt in a collision, the front seatbacks should be always used in the upright position while the vehicle is running. If the front seatbacks are not used in the upright position in a collision, the risk of sliding under the lap belt and of the lap belt sliding up over the abdomen will increase, and both can result in serious internal injury or death.**
- **Do not put cushions or any other materials between occupants and seatbacks or seat cushions. If you do so, the risk of sliding under the lap belt and of the lap belt sliding up over the abdomen will increase, and both can result in serious internal injury or death.**

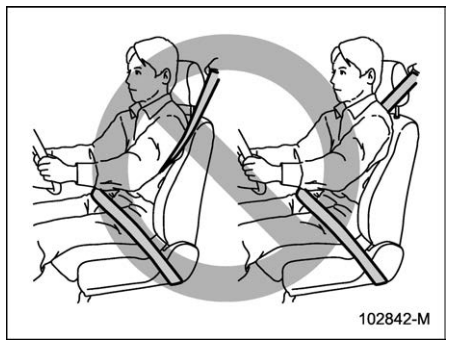

⚠ WARNING

Never place the shoulder belt under the arm or behind the back. If an accident occurs, this can increase the risk or severity of injury.

⚠ CAUTION

Metallic parts of the seatbelt can become very hot in a vehicle that has been closed up in sunny weather; they could burn an occupant. Do not touch such hot parts until they cool.

▼ Front seatbelts

1. Adjust the seat position:
   Driver’s seat: Adjust the seatback to the upright position. Move the seat as far from the steering wheel as practical while still maintaining full vehicle control.
   Front passenger’s seat: Adjust the seatback to the upright position. Move the seat as far back as possible.
2. Sit well back in the seat.
3. Pick up the tongue plate and pull the belt out slowly. Do not let it get twisted.
   - If the belt stops before reaching the buckle, return the belt slightly and

– CONTINUED –

pull it out more slowly.

- If the belt still cannot be unlocked, let the belt retract slightly after giving it a strong pull, then pull it out slowly again.

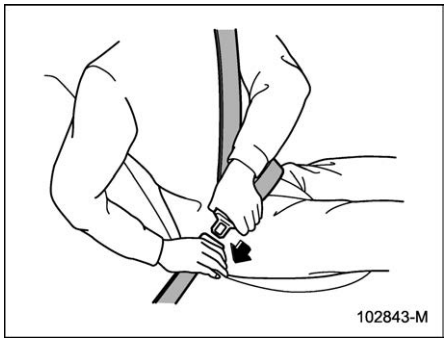

4. Insert the tongue plate into the buckle until you hear a click.

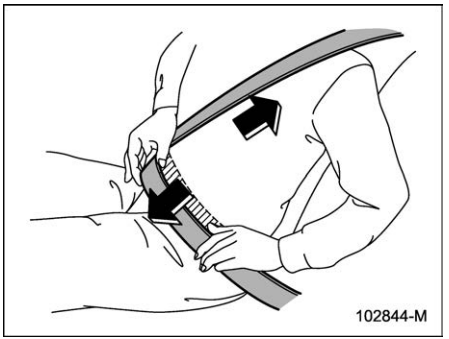

5. To tighten the lap part, pull up on the shoulder belt.
6. Place the lap belt as low as possible on the hips, not on the waist.

▽ Adjusting the front seat shoulder belt anchor height

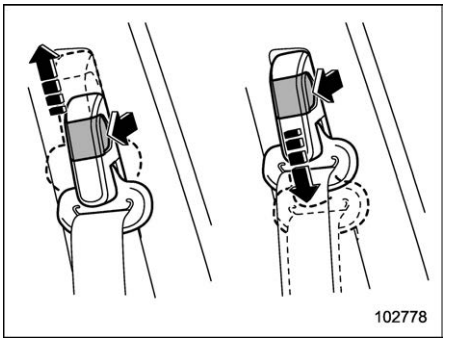

Adjust the shoulder belt anchor height to the position best suited for the driver/front passenger. Always adjust the anchor height so that the shoulder belt passes over the middle of the shoulder without touching the neck.

To raise:

Pull the release knob and slide the anchor up.

To lower:

Pull the release knob and slide the anchor down.

Pull down on the anchor to make sure that it is locked in place.

⚠ WARNING

When wearing the seatbelts, make sure the shoulder portion of the webbing does not pass over your neck. If it does, adjust the seatbelt anchor to a lower position. Placing the shoulder belt over the neck may result in neck injury during sudden braking or in a collision.

▽ Unfastening the seatbelt

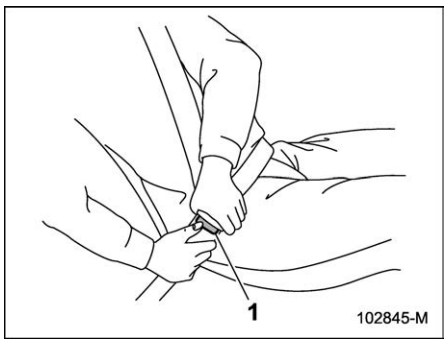

1 Button

1. Push the button on the buckle.
2. Retract the seatbelt slowly to prevent it from getting tangled or twisted.

Before closing the door, make sure that the belts are retracted properly to avoid catching the belt webbing in the door.

▼ Rear seatbelts (except rear center seatbelt)

1. Sit well back in the seat.
2. Pick up the tongue plate and pull the belt out slowly. Do not let it get twisted.
   - If the belt stops before reaching the buckle, return the belt slightly and pull it out more slowly.
   - If the belt still cannot be unlocked, let the belt retract slightly after giving a strong pull on it, then pull it out slowly again.

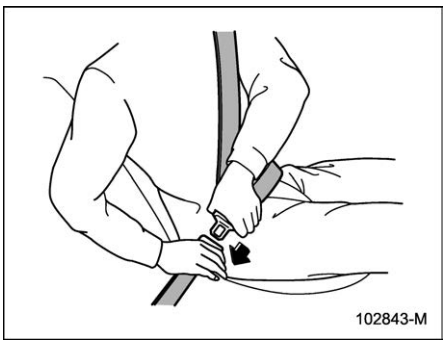

3. Insert the tongue plate into the buckle until you hear a click.

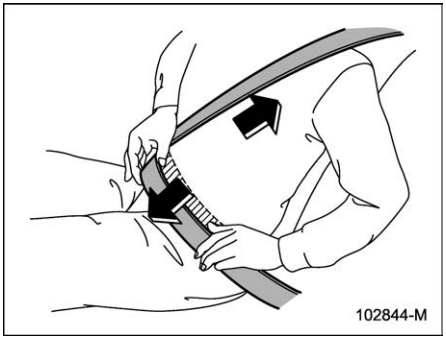

4. To tighten the lap part, pull up on the shoulder belt.
5. Place the lap belt as low as possible on the hips, not on the waist.

– CONTINUED –

▽ Unfastening the seatbelt

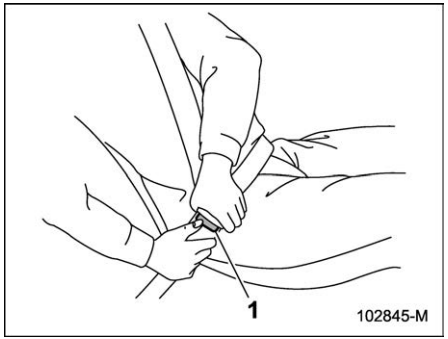

1 Button

1. Push the button on the buckle.
2. Retract the seatbelt slowly to prevent it from getting tangled or twisted.

Before closing the door, make sure that the belts are retracted properly to avoid catching the belt webbing in the door.

▼ Rear center seatbelt

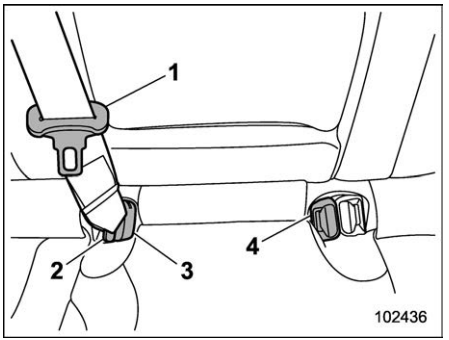

1 Center seatbelt tongue plate
2 Anchor tongue plate
3 Anchor buckle
4 Center seatbelt buckle

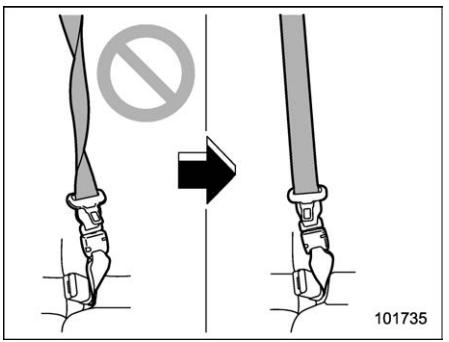

⚠ WARNING

Fastening the seatbelt with the webbing twisted can increase the risk or severity of injury in an accident. When fastening the belt after it is pulled out from the retractor, especially when inserting the anchor tongue plate into the mating buckle (on right-hand side), always check that the webbing is not twisted.

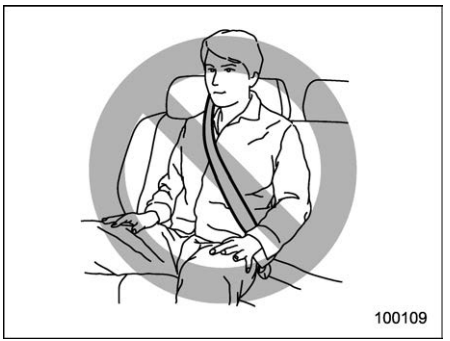

⚠ WARNING

- **Be sure to fasten both tongue plates to the respective buckles. If the seatbelt is used only as a shoulder belt (with the anchor**

tongue plate not fastened to the anchor buckle on the right-hand side), it cannot properly restrain the wearer in position in an accident, possibly resulting in serious injury or death.

- **Before fastening the seatbelt, confirm that the seatbelt is routed through the belt guide. A seatbelt not routed through the belt guide can cause neck injuries during sudden braking or in a collision, since it may slip up on the neck.**

The rear center seatbelt is stowed in the seatbelt holder on the right side of the cargo area.

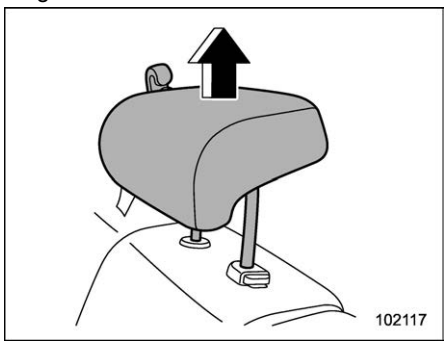

1. Raise the head restraint to the extended position. Do not remove the head restraint.

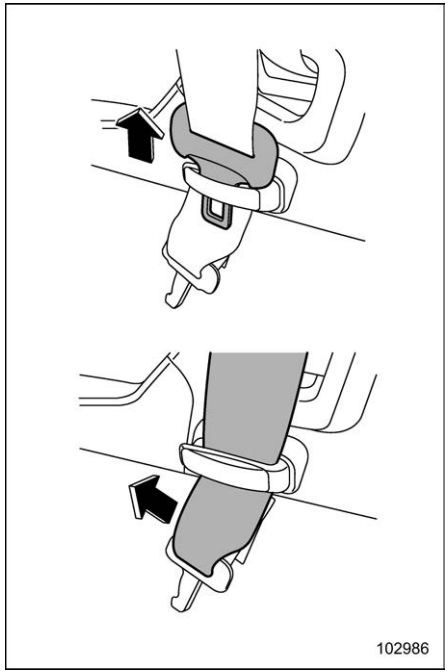

2. Remove the center seatbelt tongue plate, and then slide the webbing to remove the seatbelt from the belt holder and pull out the seatbelt slowly.

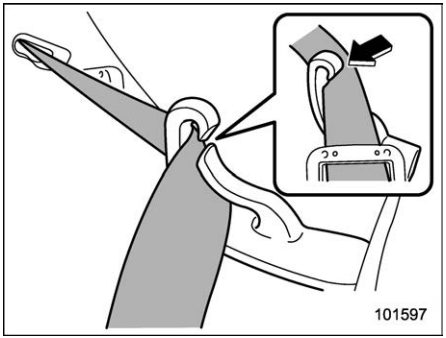

3. After drawing out the seatbelt, pass it through the belt guide as follows: First insert one edge of the belt into the open gap in the belt guide; then slide the rest of the belt in, so that the whole belt fits inside.

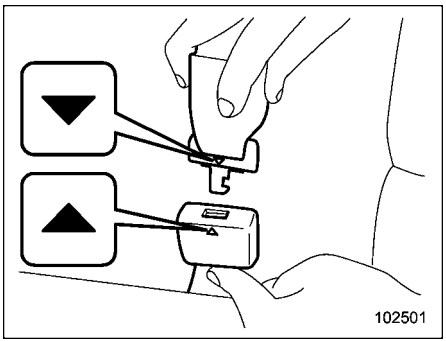

– CONTINUED –

4. Make sure that the "▼" mark on the anchor tongue plate and the "▲" mark on the anchor buckle face outwards.

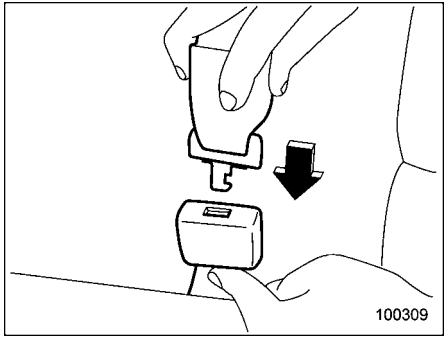

5. After confirming that the webbing is not twisted, insert the anchor tongue plate attached at the webbing end into the buckle on the right-hand side until a click is heard.
   - If the belt stops before reaching the buckle, return the belt slightly and pull it out more slowly.
   - If the belt still cannot be unlocked, let the belt retract slightly after giving it a strong pull, then pull it out slowly again.

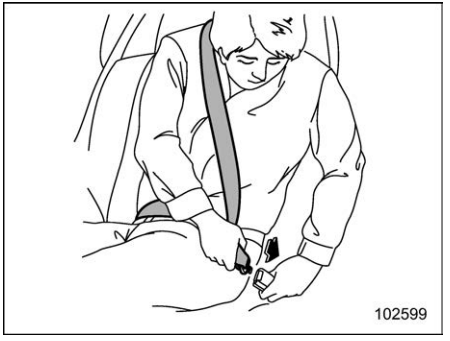

6. Insert the center seatbelt tongue plate into the center seatbelt buckle until it clicks.

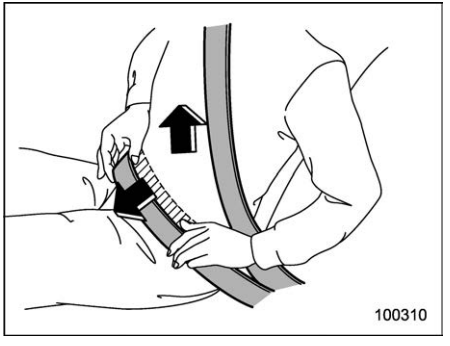

7. To make the lap part tight, pull up on the shoulder belt. And place the lap belt as low as possible on your hips, not on your waist.

▽ Unfastening the seatbelt

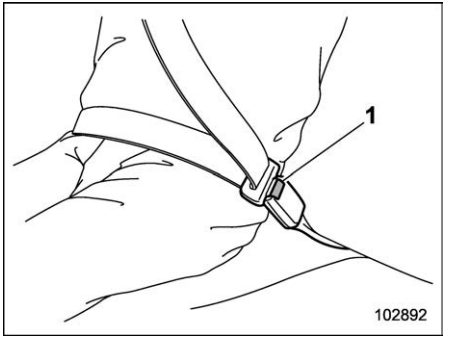

1 Button

1. Push the release button of the center seatbelt buckle (on the left-hand side) to unfasten the seatbelt.

NOTE

When the seatback is folded down for greater cargo area, it is necessary to disconnect the connector.

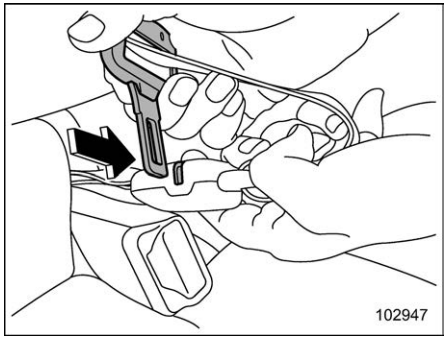

2. Insert a center seatbelt tongue plate or other hard pointed object into the slot in the anchor buckle on the right-hand side and push it in. The anchor tongue plate will then disconnect from the buckle.

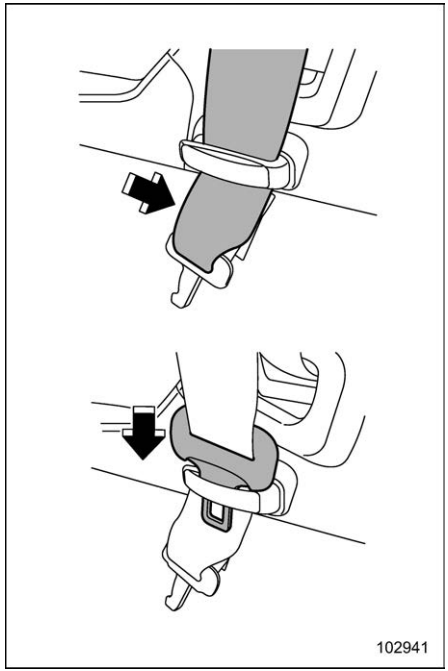

3. Allow the retractor to roll up the belt. You should hold the webbing end and guide it back into the retractor while it is rolling up. Then, pass the webbing under the belt holder and insert the anchor tongue plate into the holder.

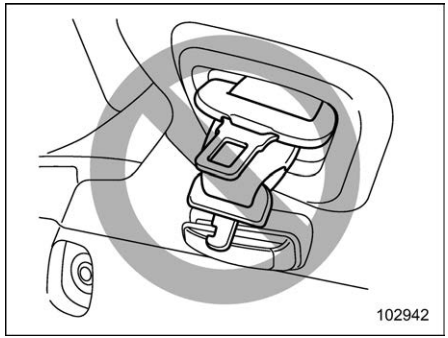

CAUTION

Observe the following precautions. Otherwise, the tongue plate can hit against the trim, causing damage to the trim.

- **Do not allow the retractor to roll up the seatbelt too quickly.**
- **Have the seatbelt fully rolled up so that the tongue plates are neatly stored.**

– CONTINUED –

■ Seatbelt Maintenance

To clean the seatbelts, use a mild soap and lukewarm water. Never bleach or dye the belts because this could seriously affect their strength.

Inspect the seatbelts and attachments including the webbing and all hardware periodically for cracks, cuts, gashes, tears, damage, loose bolts or worn areas. Replace the seatbelts even if only minor damage is found.

CAUTION

- **Keep the belts free of polishes, oils, chemicals and particularly battery acid.**
- **Never attempt to make modifications or changes that will prevent the seatbelt from operating properly.**

1-5. Seatbelt Extender

If the front seatbelts are not long enough to permit the tongue plate to engage with the seatbelt buckle, an optional seatbelt extender is available from your SUBARU dealer. When ordering an extender, only order one particularly designed for your vehicle. See your SUBARU dealer for assistance.

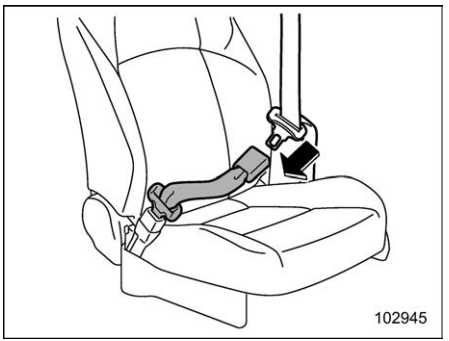

The extender adds approximately 8 inches (200 mm) of length and it can be used for either the driver or front passenger seating position.

For the safety of others, the extender should be removed after each use, especially if the next person using the seatbelt does not need one.

WARNING

Be sure to observe the following when using the seatbelt extender.

Failure to follow these instructions and warnings could reduce the effectiveness of the seatbelt and result in more serious injury or death in the event of a collision.

- **Never use the seatbelt extender with a child restraint system, as it may not securely hold the restraint system in place during an accident, significantly increasing the risk of death or serious injury.**
- **Never use the extender when the belt itself is long enough to permit it to be buckled properly. If removal of heavy clothing is all that is needed to permit the seatbelt to be buckled properly, remove the heavy clothing and do not use the extender.**
- **Never leave the seatbelt extender's tongue plate engaged with the seatbelt buckle when not in use. Doing so may prevent the airbag system from functioning properly.**
- **Never connect the seatbelt extender to the passenger seatbelt**

buckle when the passenger seat is empty; doing so may prevents the airbag system from functioning properly.

- Do not use the extender if the buckle of the extender rests over the abdomen.
- Do not let someone else use the extender. Use of an extender when it is not needed could reduce the effectiveness of the seatbelt and result in more serious injury or death in the event of a collision.
- Use the extender only for the front seatbelts and only for the model for which it was originally provided. Never use the extender for the rear seatbelts or for a different model.
- Before you fasten a seatbelt extender, make sure that the seatbelt extender is not twisted. A twisted seatbelt extender can increase the risk of a severe injury in an accident.
- Do not use more than one seatbelt extender at a time. Doing so could decrease the effectiveness of the seatbelt and increase the risk of injury or death in an accident.
- Do not use a seatbelt extender that has been used in an accident or damaged.

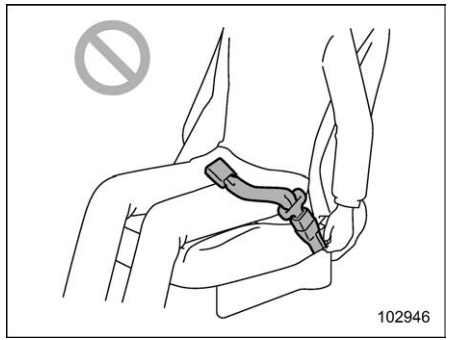

WARNING

- Make sure that the front passenger's frontal airbag ON indicator light is on when you use a seatbelt extender in the front passenger's seat. The front passenger's frontal airbag OFF indicator must also be off. If it is on, the front passenger's SRS airbag will not deploy in a collision, which could result in death or serious injury. Refer to "Front Passenger's Frontal Airbag ON and OFF Indicator Lights" ☞P158.
- The following conditions may cause the SRS frontal airbag system to detect that the driver and front passenger are wearing seatbelts, which prevents the SRS frontal airbag system from operating correctly.
  - The tongue plates of the driver and front passenger seatbelt extenders are inserted into the seatbelt buckles, but the respective extenders and seatbelts are not connected.
  - Leaving the tongue plate of the extender inserted into the seatbelt buckle when not in use.

  These conditions may prevent the seatbelt warning light and warning alarm from operating correctly. They may also prevent the SRS frontal airbags from operating correctly in a collision, which can result in injury or death. When you use a seatbelt extender, always attach it to the seatbelt buckle and seatbelt tongue plate correctly.

– CONTINUED –

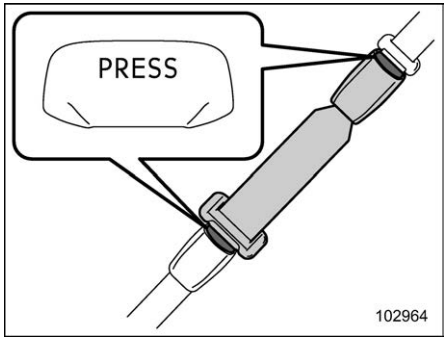

To connect the extender to the seatbelt, insert the tongue plate into the seatbelt buckle so that the “PRESS” marks on the buckle-release buttons of the extender and the seatbelt are both facing the same direction, as shown in the illustration. You will hear a click when the tongue plate locks into the buckle.

When releasing the seatbelt, press on the buckle-release button on the extender, not on the seatbelt. This helps to prevent damage to the vehicle interior and extender itself.

1-6. Seatbelt Pretensioners

The following seatbelts have a seatbelt pretensioner.

- Driver’s seatbelt
- Front passenger’s seatbelt
- Window-side rear passenger’s seatbelts

The seatbelt pretensioners are designed to be activated in the event of an accident involving a moderate to severe frontal and side collision and rollover accident.

WARNING

- **To obtain maximum protection, the occupants should sit in an upright position with their seatbelts properly fastened. Refer to “Seatbelts” ☞P39.**
- **Do not modify, remove or strike the seatbelt retractor assemblies equipped with seatbelt pretensioners or surrounding area. This could result in accidental activation of the seatbelt pretensioners or could make the system inoperative, possibly resulting in serious injury. Seatbelt pretensioners have no user-serviceable parts. For required servicing of seatbelt retractors equipped with seatbelt pretensioners, consult your SUBARU dealer.**
- **When discarding seatbelt retractor assemblies equipped with seatbelt pretensioners or scrapping the entire vehicle due to collision damage or for other reasons, consult your SUBARU dealer.**

NOTE

- **Seatbelt pretensioners are not designed to activate in minor impacts or in rear impacts. The pretensioner can also be activated by the following sensors.**
  - **Front impact sensors**
  - **Side impact sensors**
  - **Rollover sensor**
- **Pretensioners are designed to function on a one-time-only basis. In the event that a pretensioner is activated, the seatbelt retractor assemblies equipped with seatbelt pretensioners should be replaced only by an authorized SUBARU dealer. When replacing seatbelt retractor assemblies, use only genuine SUBARU parts.**

- **If a seatbelt that has a seatbelt pretensioner does not retract or cannot be pulled out due to a malfunction or activation of the pretensioner, contact your SUBARU dealer as soon as possible.**
- **If the seatbelt retractor assembly or surrounding area has been damaged, contact your SUBARU dealer as soon as possible.**
- **When you sell your vehicle, we urge you to inform the buyer that the vehicle is equipped with seatbelt pretensioners. Also, notify the buyer of the contents in this section.**

■ Seatbelt with Shoulder Belt Pretensioner

NOTE

This section is applicable to the following components.

- **Front passenger's seatbelt**
- **Rear passenger's seatbelt (window-side)**

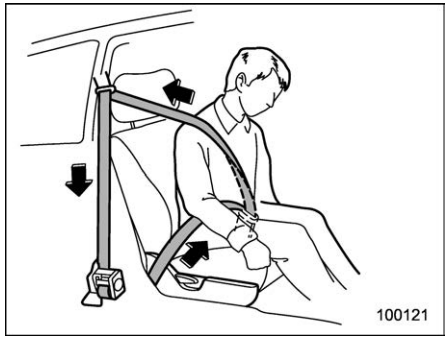

If the sensor detects a certain predetermined amount of force during frontal or side collisions or rollover accidents, any seatbelt that has a seatbelt pretensioner is quickly drawn back in by the retractor to take up the slack so that the belt more effectively restrains the seat occupant.

The window-side rear passenger's seatbelt pretensioner includes a tension reducing device that limits the peak forces exerted by the seatbelt on the occupant in the event of a collision.

The front passenger's seatbelt pretensioner includes a tension reducing device which limits the peak forces exerted by the seatbelt on the occupant in the event of a collision.

- Adaptive force limiter

The front passenger's side adaptive force limiter will select a reducing load to the suit body size of the occupant as detected by the occupant detection sensor.

When a seatbelt pretensioner is activated, an operating noise will be heard and a small amount of smoke will be released. These occurrences are normal and not harmful. This smoke does not indicate a fire in the vehicle.

Once the seatbelt pretensioner has been activated, the seatbelt retractor remains locked. Consequently, the seatbelt cannot be pulled out and retracted and therefore must be replaced.

■ Seatbelt with Shoulder Belt and Lap Belt Pretensioners

NOTE

This section is applicable to the driver's seatbelt.

– CONTINUED –

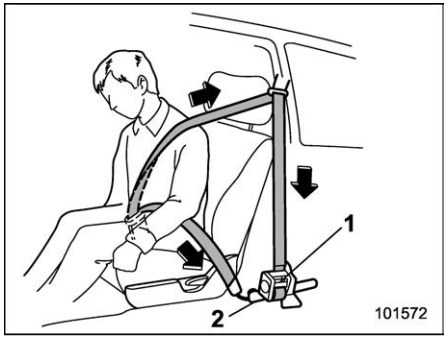

1 Seatbelt retractor assembly (shoulder belt pretensioner)
2 Lap belt pretensioner

If the sensor detects a certain predetermined amount of force during frontal or side collisions or rollover accidents, any seatbelt that has a seatbelt pretensioner is quickly drawn back in by the retractor to take up the slack so that the belt more effectively restrains the seat occupant.

The shoulder belt pretensioner is supplemented by a lap belt pretensioner, which is located at the base of the center pillar. The lap belt pretensioner instantaneously pulls in the belt to eliminate slack if a certain level of frontal collision force is detected. As a result, the seatbelt restrains the front seat occupant more effectively.

The driver's seatbelt pretensioner includes a tension reducing device which limits the peak forces exerted by the seatbelt on the occupant in the event of a collision.

When a seatbelt pretensioner is activated, an operating noise will be heard and a small amount of smoke will be released. These occurrences are normal and not harmful. This smoke does not indicate a fire in the vehicle.

Once the seatbelt pretensioner has been activated, the seatbelt pretensioner remains locked. Consequently, the seatbelt cannot be pulled out and retracted and therefore must be replaced.

■ System Monitors

A diagnostic system continually monitors the readiness of the seatbelt pretensioner with the ignition switch in the "ON" position. The seatbelt pretensioners share the control module with the SRS airbag system. Therefore, if any malfunction occurs in a seatbelt pretensioner, the SRS airbag system warning light will illuminate. For details, refer to "SRS Airbag System Monitors" ☞P99.

■ System Servicing

⚠ WARNING

- **When discarding a seatbelt retractor assembly or scrapping the entire vehicle damaged by a collision, consult your SUBARU dealer.**
- **Tampering with or disconnecting the system's wiring could result in accidental activation of the seatbelt pretensioner and/or SRS airbag or could make the system inoperative, which may result in serious injury. Do not use electrical test equipment on any circuit related to the seatbelt pretensioner and SRS airbag systems. For required servicing of the seatbelt pretensioner, consult your nearest SUBARU dealer.**

⚠ CAUTION

For the locations of the sensors and control modules, refer to "Components" ☞P78.

If you need service or repair in those areas or near the front seatbelt

retractors, have the work performed by your authorized SUBARU dealer.

NOTE

If the front or side part of the vehicle is damaged in an accident to the extent that the seatbelt pretensioner does not operate, contact your SUBARU dealer as soon as possible.

■ Precautions against Vehicle Modification

Always consult your SUBARU dealer if you want to install any accessory parts to your vehicle.

CAUTION

Do not perform any of the following modifications. Such modifications can interfere with proper operation of the seatbelt pretensioners.

- **Attachment of any equipment (bush bar, winches, snow plow, skid plate, etc.) other than genuine SUBARU accessory parts to the front end.**
- **Modification of the suspension system or front end structure.**
- **Installation of a tire of different size and construction from the tires specified on the vehicle placard attached to the driver's door pillar or specified for individual vehicle models in this Owner's Manual.**

1-7. Rear Seat Reminder

This function prompts the driver to confirm the presence of passengers and cargo in the rear.

This function will be activated when the rear doors are opened and closed.

It alerts the driver by warning messages on the combination meter display (color LCD) and beeps when the ignition switch is turned from the "ON" position to the "OFF" position.

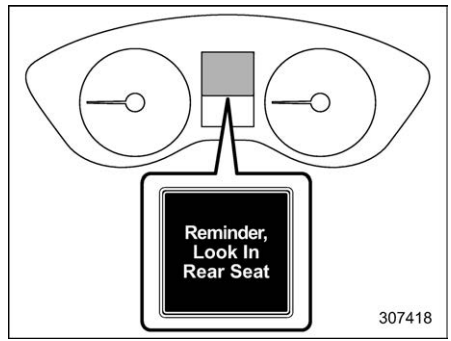

NOTE

- **This function does not directly detect passengers and cargo in the rear seat.**
- **This function detects the opening and closing of the rear doors. In this**

– CONTINUED –

situation, there is the possibility that the following phenomenon may occur.
  - **It may alert the driver even if there are no passengers or cargo in the rear seat.**
  - **It may not alert the driver even if there are passengers and cargo in the rear seat.**
- **This function can be set to on or off by the "Car settings". For details, refer to "Car settings" ☞P201 (11.6-inch display models) or "Vehicle setting icons" ☞P219 (dual 7.0-inch display models).**
- **The ON/OFF setting will not be changed even if the ignition switch is turned to the "OFF" position.**
- **The ON/OFF setting will be returned to the default setting if the battery is removed.**

1-8. Child Restraint Systems

■ Safety Precautions

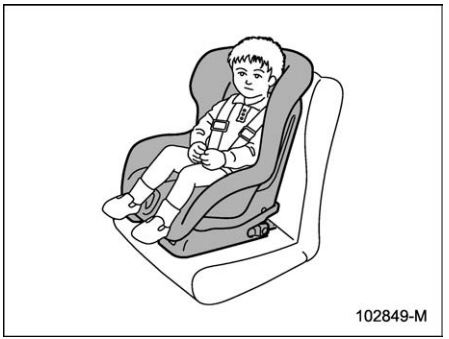

Infants and children should be placed in an infant or child restraint system on the rear seat while riding in the vehicle.

You should use an infant or child restraint system that meets Federal Motor Vehicle Safety Standards or Canada Motor Vehicle Safety Standards, is compatible with your vehicle and is appropriate for the child's age and size.

All child restraint systems are designed to be secured in vehicle seats by lap belts or the lap belt portion of a lap/shoulder belt (except those described in "Installation of Child Restraint Systems by Use of Lower and Tether Anchorages (LATCH)" ☞P65).

Children could be endangered in an accident if their child restraint systems are not properly secured in the vehicle. When installing the child restraint system, carefully follow the manufacturer's instructions.

According to accident statistics, children are safer when properly restrained in the rear seating positions than in the front seating positions.

All U.S. states and Canadian provinces require that infants and small children be restrained in an approved child restraint system at all times while the vehicle is moving.

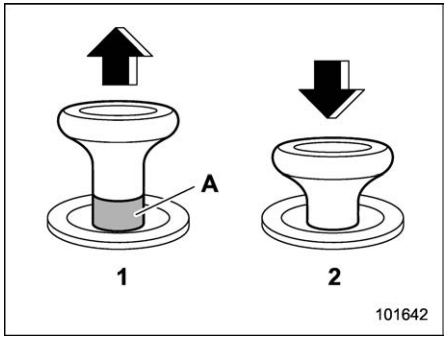

Lock release knob
1 Unlocked
2 Locked
A Unlocking marker in red

WARNING

- **Before installing a child restraint system, be sure to confirm that the seatback is securely locked into place. Otherwise, in an accident, serious injury or death could result.**
- **Do not leave children in the car unattended. High interior temperatures may cause heat stroke and dehydration that result in serious injury or death.**

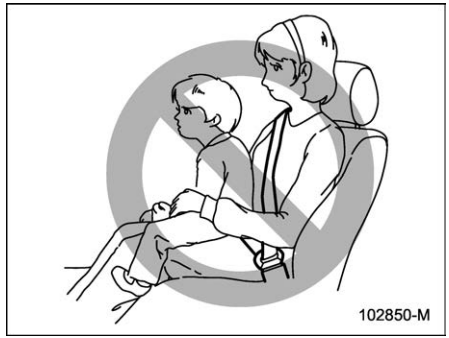

WARNING

Never let a passenger hold a child on their lap or in their arms while the vehicle is moving. The passenger cannot protect the child (or infant) from injury in a collision, because the child will be caught between the passenger and objects inside the vehicle. Additionally, if a passenger holds a child on their lap or in their arms in the front seat, they expose the child to another serious danger. Since the SRS airbag deploys with considerable speed and force, the child could be injured or even killed.

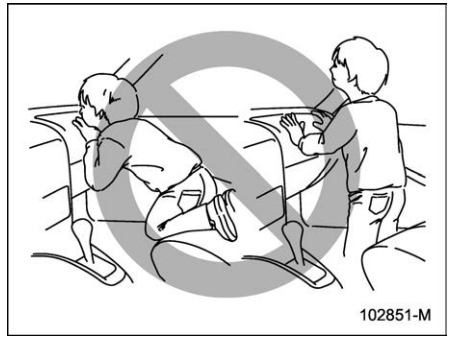

WARNING

Children should be properly restrained at all times when in the vehicle. Never allow a child to stand or kneel on any seat. An unrestrained child will be thrown forward during a sudden stop or in an accident and can be injured seriously. Additionally, a child who stands or kneels on or in front of the front seat is exposed to another serious danger. Since the SRS airbag deploys with considerable speed and force, the child could be injured or even killed.

– CONTINUED –

Safety Tips for Installing Child Restraint Systems

WARNING

- Child restraint systems and seatbelts can become hot in a vehicle that has been closed up in sunny weather; they could burn a small child. Check the child restraint system before you place a child in it.
- Do not use a seatbelt extender. If a seatbelt extender is used when installing a child restraint system, the seatbelt will not securely hold the child restraint system. Use of a seatbelt extender could cause death or serious injury to children or other passengers in sudden braking, swerving, or accidents.
- Attach the child restraint system to the anchors properly. When using the LATCH anchors, be sure that there are no foreign objects around the anchors. Make sure the child restraint system is securely attached. Otherwise, it may cause death or serious injury to children or other passengers in sudden braking, swerving, or accidents.
- Do not leave an unsecured child restraint system in your vehicle. Unsecured child restraint systems can be thrown around inside of the vehicle in a sudden stop, turn or accident; they can strike and injure vehicle occupants as well as result in serious injuries or death to the child.
- Several types of child restraint systems may conceal the buckle of the neighboring seat. If the occupant of the neighboring seat cannot correctly fasten the seatbelt, that person must move to a different seat. If the seatbelt cannot be correctly fastened, there is the risk of serious injury or death in the event of sudden braking or a collision.
- If the child restraint system cannot be correctly installed because it contacts the driver's seat, move the child restraint system to a different seat. If it cannot be installed in a different seat (other than the driver's seat), adjust the front seat so that contact does not occur.
- Even with advanced airbags, infants and children can be seriously injured by the airbag. Seat children in the rear seat properly restrained. The SRS airbag deploys with considerable speed and force and can injure or even kill children, especially if they are not restrained or improperly restrained. Because children are lighter and weaker than adults, their risk of being injured from deployment is greater. For that reason, be sure to secure ALL types of child restraint systems on the REAR seats. You should choose a restraint system which is appropriate for the child's age, height and weight. According to accident statistics, children are safer when properly restrained in the rear seating positions than in the front seating positions.
- Do not use lower anchorages for a seat in the center seating position unless a child restraint system manufacturer's instructions permit and specify using anchors spaced as far apart as those in this vehicle.
- Do not connect two or more lower hooks onto the same anchorage

(bar).

- **NEVER INSTALL A REARWARD FACING CHILD RESTRAINT SYSTEM ON THE FRONT PASSENGER'S SEAT. DOING SO RISKS SERIOUS INJURY OR DEATH TO THE CHILD BY PLACING THE CHILD'S HEAD TOO CLOSE TO THE SRS AIRBAG.**
- **Do not allow children to lean their heads or any other parts of their bodies against the door or the area of the seat, front and rear pillars or roof side rails. The SRS side airbags and SRS curtain airbags deploy even if children are seated in the child restraint system, and the impact could cause death or serious injury to the child.**
- **To secure the child restraint system, be sure to comply with all installation instructions provided by the child restraint system manufacturer. Not doing so could result in death or serious injury to children in a sudden stop or accident.**

CAUTION

When you install a child restraint system, follow the manufacturer's instructions supplied with it. After installing the child restraint system, check to ensure that it is held securely in position. If it is not held tight and secure, the danger of your child suffering personal injury in the event of an accident may be increased.

■ Choosing a Child Restraint System

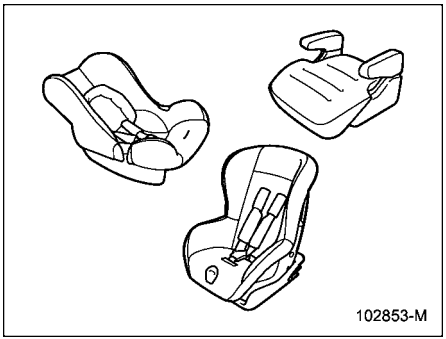

Choose a child restraint system that is appropriate for the child's age and size (weight and height) in order to provide the child with proper protection. The child restraint system should meet all applicable requirements of Federal Motor Vehicle Safety Standards for the United States or of Canada Motor Vehicle Safety Standards for Canada. It can be identified by looking for the label on the child restraint system or the manufacturer's statement of compliance in the document attached to the system. Also it is important for you to make sure that the child restraint system is compatible with the vehicle in which it will be used.

NOTE

Some sizes of child restraint systems may not fit the vehicle seat. Before purchasing a child restraint system, check whether it fits on the vehicle seat.

– CONTINUED –

■ When Installing the Forward Facing Child Restraint System on the Front Passenger's Seat

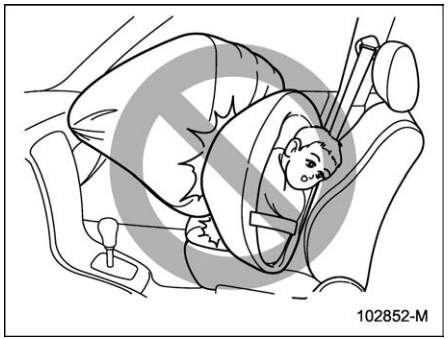

⚠ WARNING

- **NEVER INSTALL A REARWARD FACING CHILD RESTRAINT SYSTEM ON THE FRONT PASSENGER'S SEAT. DOING SO RISKS SERIOUS INJURY OR DEATH TO THE CHILD BY PLACING THE CHILD'S HEAD TOO CLOSE TO THE SRS AIRBAG.**
- **The front passenger's seat is not equipped with tether anchorages. Therefore, when installing a child restraint system that uses tether straps, do not install it on the front passenger's seat.**

Only forward facing child restraint systems (including booster seats) can be installed on this seat and should only be installed when it is unavoidable. When you install a forward facing child restraint system to the front passenger's seat, perform the following procedure.

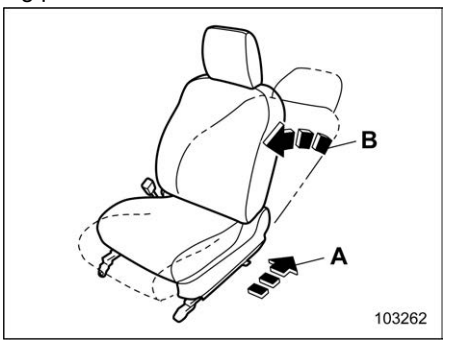

A Seat position: Rearmost as possible
B Seatback: Upright

1. Adjust the front passenger's seat as illustrated.
2. Install the child restraint system to the front passenger's seat. Refer to "Installing a forward facing child restraint system" ☞P61.
3. Place and secure the child in the child restraint system.
4. Check that the front passenger's frontal airbag ON/OFF indicator light status meets the requirements of your child restraint system.

ON: Front passenger's frontal airbag ON indicator light
OFF: Front passenger's frontal airbag OFF indicator light

When front passenger's frontal airbag OFF indicator light is illuminated:
Only forward facing child restraint systems can be installed on the front passenger's seat.
When front passenger's frontal airbag ON indicator light is illuminated:
Child restraint systems cannot be in-

stalled on the front passenger's seat. Install the child restraint system on the rear seats. For further details, refer to "SUBARU Advanced Frontal Airbag System" ☞P80.

5. Check that the child restraint system does not contact the head restraint. If the child restraint system does make contact with the head restraint, raise the head restraint to the extended position. If the child restraint system still makes contact, remove the head restraint. For details, refer to "Head Restraint Adjustment" ☞P32.

■ Installing Child Restraint Systems with ALR/ELR Seatbelt

⚠ CAUTION

- **When you install a child restraint system, follow the manufacturer's instructions supplied with it. After installing the child restraint system, check to ensure that it is held securely in position. If it is not held tight and secure, the danger of your child suffering personal injury in the event of an accident may be increased.**
- **When installing a child restraint system in the rear center seating position, set both seatbacks to the original position. Otherwise, the child restraint system cannot be securely restrained, which may result in death or serious injuries in the event of sudden stop, sudden steering maneuver or an accident.**

▼ Installing a rearward facing child restraint system

⚠ WARNING

- **NEVER INSTALL A REARWARD FACING CHILD RESTRAINT SYSTEM ON THE FRONT PASSENGER'S SEAT. DOING SO RISKS SERIOUS INJURY OR DEATH TO THE CHILD BY PLACING THE CHILD'S HEAD TOO CLOSE TO THE SRS AIRBAG.**
- **Before installing a child restraint system, be sure to confirm that the seatback is securely locked into place. Otherwise, in an accident, serious injury or death could result.**

1. Place the child restraint system in the rear seating position.

⚠ WARNING

When you intend to install a child restraint system in the rear center seating position, if the child restraint system does not fit snugly against the contours of the rear center seat cushion, install the child restraint system in the window-side seating position to be safe.

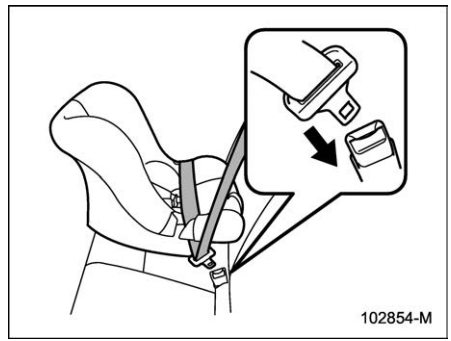

2. Run the lap and shoulder belt through or around the child restraint system following the instructions provided by its manufacturer.
3. Insert the tongue plate into the buckle until you hear a click.

– CONTINUED –

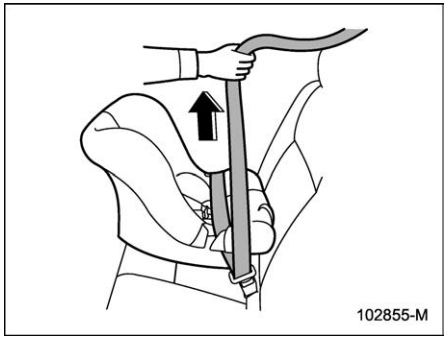

4. Take up the slack in the lap belt.
5. If using the seatbelt in the ALR mode is recommended by the manufacturer's instructions supplied with the child restraint system, perform the following procedure.
   (1) Pull out the seatbelt fully from the retractor to change the retractor over from the Emergency Locking Retractor (ELR) to the Automatic Locking Retractor (ALR) mode.
   (2) Allow the belt to rewind into the retractor. As the belt is rewinding, clicks will be heard which indicate the retractor functions as ALR.

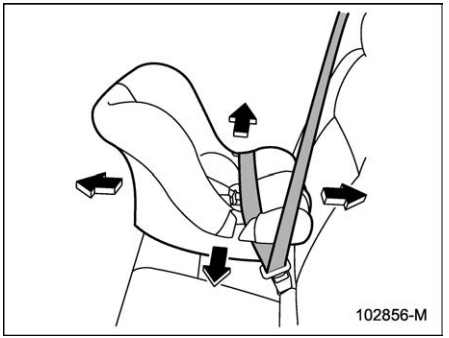

6. Before having a child sit in the child restraint system, try to move it back and forth and right and left to check if it is firmly secured. Sometimes a child restraint system can be more firmly secured by pushing it down into the seat cushion and then tightening the seatbelt. It should not be possible to move the child restraint system more than 1 in (2.5 cm) in any direction along the seatbelt path.
7. If the seatbelt has been set to the ALR mode in step 5, pull at the shoulder portion of the belt to confirm that it cannot be pulled out (ALR properly functioning).

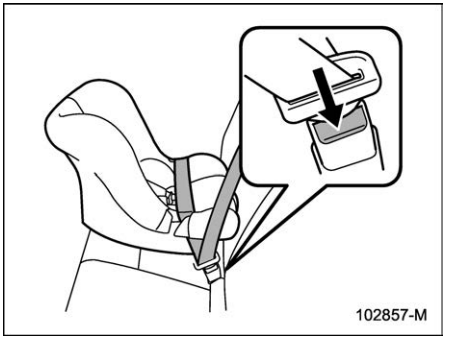

8. To remove the child restraint system, press the release button on the seat-belt buckle and allow the belt to retract completely. The belt will return to the ELR mode.

NOTE

When the child restraint system is no longer in use, remove it and restore the ELR function of the retractor. That function is restored by allowing the seatbelt to retract fully.

▼ Installing a forward facing child restraint system

WARNING

- **NEVER INSTALL A CHILD RESTRAINT SYSTEM ON THE FRONT PASSENGER'S SEAT IF THE FRONT PASSENGER'S FRONTAL AIRBAG ON INDICATOR LIGHT ILLUMINATES. DOING SO RISKS SERIOUS INJURY OR DEATH TO THE CHILD BY PLACING THE CHILD'S HEAD TOO CLOSE TO THE SRS AIRBAG.**
- **Before installing a child restraint system, be sure to confirm that the seatback is securely locked into place. Otherwise, in an accident, serious injury or death could result.**

1. Place the child restraint system in the appropriate position.

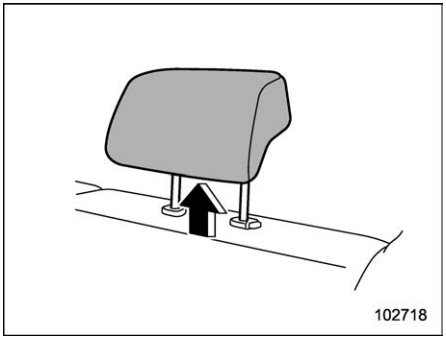

2. If the child restraint system makes contact with the head restraint, perform the following procedure.
   – Except rear center seat: Remove the head restraint.
   – Rear center seat: Raise the head restraint to the extended position. If the child restraint system still makes contact, install the child restraint system in a seating position other than the rear center seat.

For details, refer to "Head Restraint Adjustment" ☞P37.

CAUTION

Store the removed head restraint in the cargo area.

Do not place the head restraint in the passenger compartment to prevent it from being thrown around in the passenger compartment in a sudden stop or a sharp turn.

WARNING

When you intend to install a child restraint system in the rear center seating position, if the child restraint system does not fit snugly against the contours of the rear center seat cushion, install the child restraint system in the window-side seating position to be safe.

– CONTINUED –

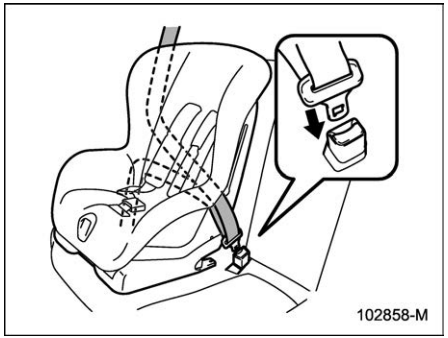

3. Run the lap and shoulder belt through the child restraint system following the instructions provided by its manufacturer.
   – When a child restraint system is installed on the rear center seating position, pass the rear center seatbelt through the belt guide properly. For details, refer to “Rear center seatbelt” ☞P44.
4. Insert the tongue plate into the buckle until you hear a click.

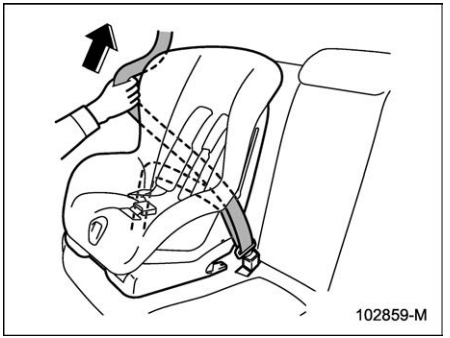

5. Take up the slack in the lap belt.
6. Pull out the seatbelt fully from the retractor to change the retractor over from the Emergency Locking Retractor (ELR) to the Automatic Locking Retractor (ALR) function. Then, allow the belt to rewind into the retractor. As the belt is rewinding, clicks will be heard which indicate the retractor functions as ALR.

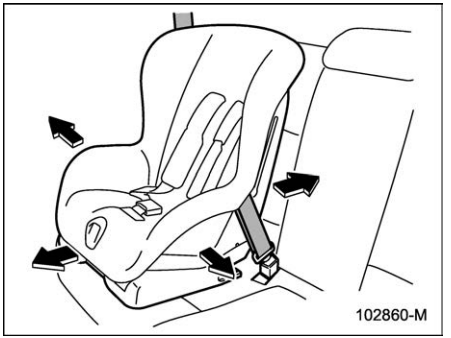

7. Before having a child sit in the child restraint system, try to move it back and forth and right and left to check if it is firmly secured. Sometimes a child restraint system can be more firmly secured by pushing it down into the seat cushion and then tightening the seatbelt. It should not be possible to move the child restraint system more than 1 in (2.5 cm) in any direction along the seatbelt path.
8. Pull at the shoulder portion of the belt to confirm that it cannot be pulled out (ALR properly functioning).

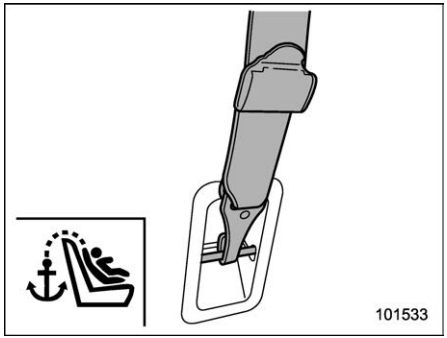

9. Attach the tether hook onto the tether anchorage and tighten the tether strap firmly. For additional instructions, refer to “Tether Anchorages” ☞P70.

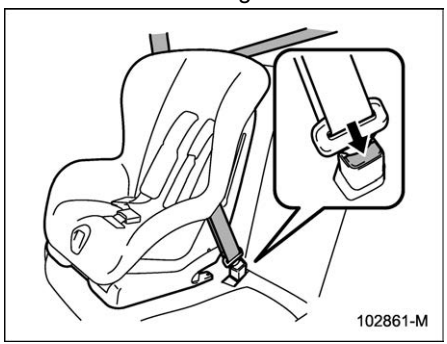

10. To remove the child restraint system, press the release button on the seatbelt buckle and allow the belt to retract completely. The belt will return to the ELR mode.

If you have installed a child restraint system for the **rear center seating position**, when you remove the child restraint system, the seatbelt may not be restored to the ELR mode even if the seatbelt is retracted. In this case, lower the head restraint to the retracted position to allow the seatbelt to retract moreover. The seatbelt will return to the ELR mode.

Remember that the head restraint is not intended to be used at the lowest position (retracted position). Therefore, when the rear center seat is occupied (including when a child restraint system is installed) next time, be sure to raise the head restraint to the extended position.

NOTE

When the child restraint system is no longer in use, remove it and restore the ELR function of the retractor. That function is restored by allowing the seatbelt to retract fully.

■ Installing a Booster Seat or Booster Cushion

⚠ WARNING

NEVER INSTALL A BOOSTER SEAT/ CUSHION ON THE FRONT PASSENGER’S SEAT IF THE FRONT PASSENGER’S FRONTAL AIRBAG ON INDICATOR LIGHT ILLUMINATES. DOING SO RISKS SERIOUS INJURY OR DEATH TO THE CHILD BY PLACING THE CHILD’S HEAD TOO CLOSE TO THE SRS AIRBAG.

Booster seat

– CONTINUED –

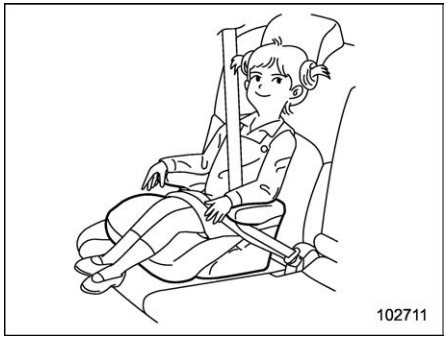

Booster cushion

1. Adjust the head restraint as follows.

For booster seat:

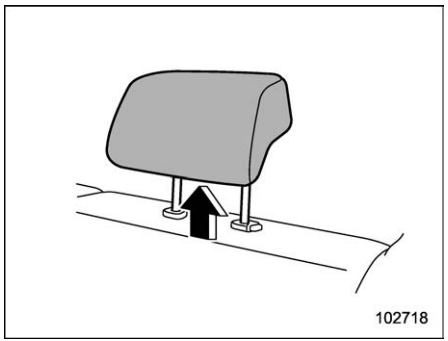

If the booster seat makes contact with the head restraint, perform the following procedure.

– Except rear center seat: Remove the head restraint.
– Rear center seat: Raise the head restraint to the extended position. If the booster seat still makes contact, install the child restraint system in a seating position other than the rear center seat.

For details, refer to “Head Restraint Adjustment” ☞P37.

CAUTION

Store the removed head restraint in the cargo area. Do not place the head restraint in the passenger compartment to prevent it from being thrown around in the passenger compartment in a sudden stop or a sharp turn.

For booster cushion:

Raise the head restraint to the extended position (center seat). Do not remove the head restraint.

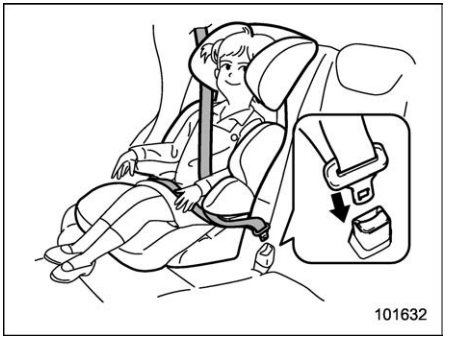

2. Place the booster seat/cushion and then sit the child on it. The child should sit well back on the booster seat/cushion.
3. Run the lap and shoulder belt following the instructions provided by its manufacturer. For booster seat/cushion with a belt guide, use the seatbelt through the belt guide.
4. Insert the tongue plate into the buckle until you hear a click. Take care not to twist the seatbelt.
   Make sure the shoulder belt is positioned across the center of child’s shoulder and that the lap belt is positioned as low as possible on the child’s hips.

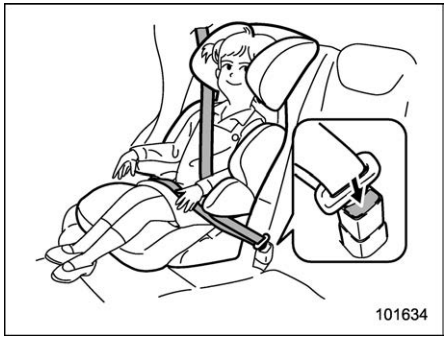

5. To unfasten the seatbelt, press the release button on the seatbelt buckle and allow the belt to retract.

WARNING

- **Never use a belt that is twisted or reversed. In an accident, this can increase the risk or severity of injury to the child.**
- **Never place the shoulder belt under the child's arm or behind the child's back. If an accident occurs, this can increase the risk or severity of injury to the child.**
- **The seatbelt should fit snugly in order to provide full restraint. Loose fitting belts are not as effective in preventing or reducing injury.**
- **Place the lap belt as low as possible on the child's hips. A high-positioned lap belt will increase the risk of sliding under the lap belt and of the lap belt sliding up over the abdomen, and both can result in serious injury or death.**
- **Make sure the shoulder belt is positioned across the center of child's shoulder. Placing the shoulder belt over the neck may result in neck injury during sudden braking or in a collision.**

Installation of Child Restraint Systems by Use of Lower and Tether Anchorages (LATCH)

▼ **Lower and tether anchorages**

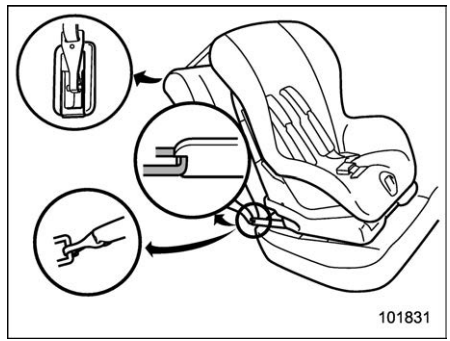

WARNING

- **Attach the child restraint system to the anchors properly. When using the LATCH anchors, be sure that there are no foreign objects around the anchors. Make sure the child restraint system is securely attached. Otherwise it may cause death or serious injury to children or other passengers in sudden braking, swerving, or accidents.**

– CONTINUED –

- **When installing a child restraint system using LATCH anchors with the rear seatbelt fastened, ensure that the rear seatbelt does not become caught in the child restraint system or the lower LATCH anchorages.**

NOTE

The seatbelt warning system of the rear seats detects if any of the seats are occupied by a passenger. Installing a child restraint system in the rear seating area, using the LATCH anchors, may result in the activation of the passenger seatbelt warning light and chime. Fastening the rear seatbelt prior to installing the child restraint system will avoid activating the passenger seatbelt warning light and chime. For details, refer to "Rear passenger's seats" ☞P157.

Some types of child restraint systems can be installed on the rear seat of your vehicle without use of the seatbelts. Such child restraint systems are secured to the dedicated anchorages provided on the vehicle body.

The lower and tether anchorages are sometimes referred to as the LATCH system (**L**ower **A**nchors and **T**ethers for **CH**ildren).

102866-M

Your vehicle is equipped with 5 lower anchorages (U.S.-spec. models), 4 lower anchorages (other models) and 3 tether anchorages for accommodating such child restraint systems.

▽ Lower anchorages

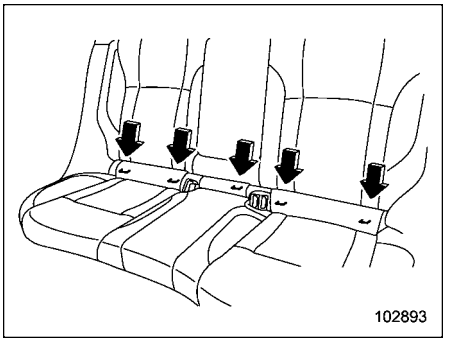

102893

U.S.-spec. models

⚠ WARNING

Do not connect two or more lower hooks onto the same anchorage (bar).

There are a total of 5 lower anchorages at the rear seat. The second lower anchorage from the right side is used for both the right seat and center seat. Each lower anchorage is located where the seat cushion meets the seatback.

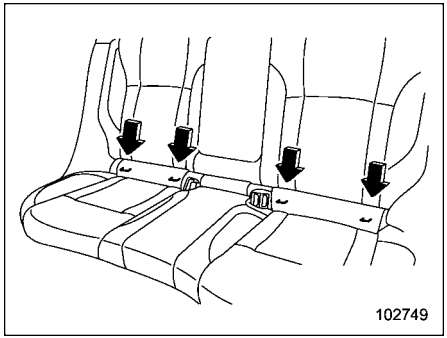

Canada-spec. models

WARNING

Do not connect two or more lower hooks onto the same anchorage (bar).

2 lower anchorages are provided for installing a child restraint system in the rear seat window-side seating positions. Lower anchorages for window-side seating positions may be used for a seat in the center seating position if a child restraint system manufacturer's instructions permit and specify using anchors as far apart as those in this vehicle. Each lower anchorage is located where the seat cushion meets the seatback.

▽ **Tether anchorages**

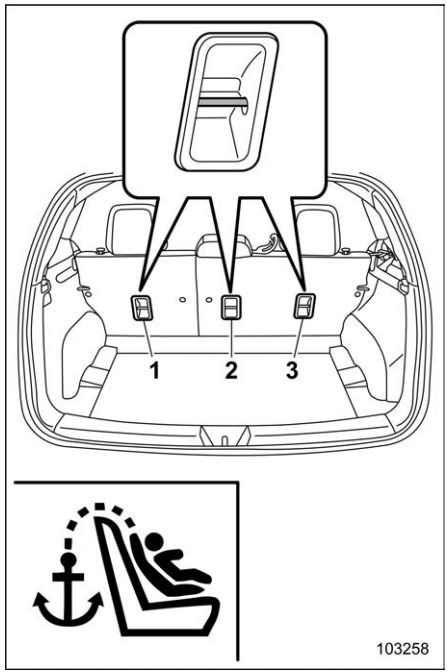

1 For the left seat
2 For the center seat
3 For the right seat

The tether anchorages are provided at the locations shown in the above illustration.

For details, refer to "Tether Anchorages" ☞P70.

▽ **To install a child restraint system using lower and tether anchorages**

WARNING

Before installing a child restraint system, be sure to confirm that the seatback is securely locked into place. Otherwise, in an accident, serious injury or death could result.

1. Move the seatback back and forth to confirm that it is securely locked into place.
   – Check that the red colored unlocking marker on the lock release knob is not visible. For details, refer to "Folding Down the Rear Seatback" ☞P35.

– CONTINUED –

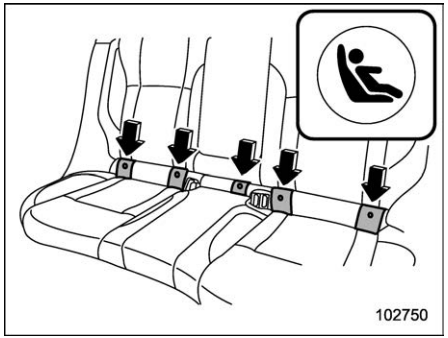

U.S.-spec. models

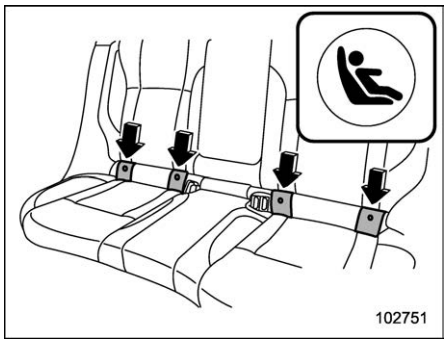

Canada-spec. models

2. You will find "" marks at the bottoms of the rear seatback. These marks indicate the positions of the lower anchorages.

Each lower anchorage is located behind the cover of seatback bottom.

CAUTION

When you install a child restraint system, follow the manufacturer's instructions supplied with it. After installing the child restraint system, check to ensure that it is held securely in position. If it is not held tight and secure, the danger of your child suffering personal injury in the event of an accident may be increased.

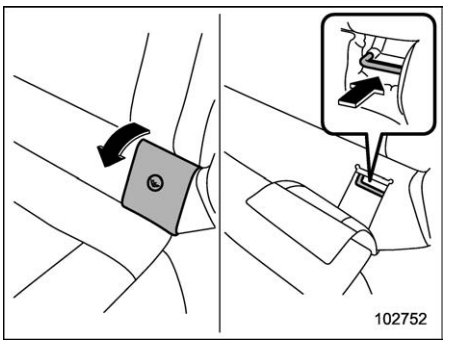

Peel off the anchorage cover completely from the selected side of the rear seatback to expose the lower anchorages to be used for installation of the child restraint system.

If it is hard to install the child restraint system because the anchorage cover returns to the original position, press the anchorage cover to the seat cushion until it is flat.

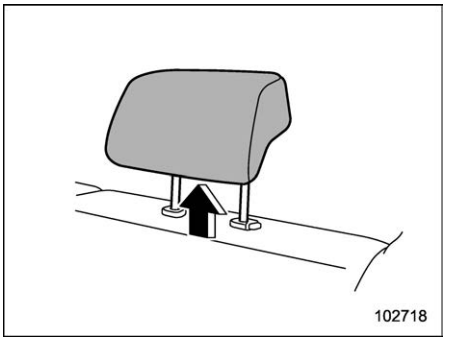

3. If the child restraint system makes contact with the head restraint of the rear seating position where the child restraint system is to be installed, perform the following procedure.
   – Except rear center seat: Remove the head restraint.
   – Rear center seat: Raise the head restraint to the extended position. If the child restraint system still makes contact, remove the head restraint.

For details, refer to "Head Restraint Adjustment" ☞P37.

CAUTION

Store the removed head restraint in the cargo area. Do not place the head restraint in the passenger compartment to prevent it from being thrown around in the passenger compartment in a sudden stop or a sharp turn.

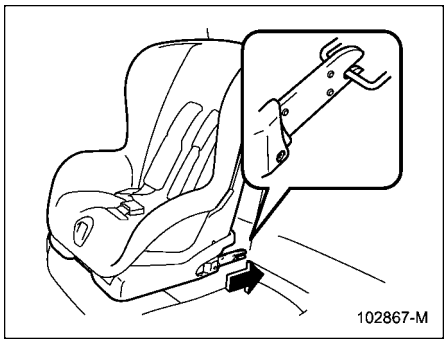

4. While following the instructions supplied by the child restraint system manufacturer, connect the lower hooks onto the lower anchorages located at "" marks on the bottom of the rear seatback. When the hooks are connected, make sure the adjacent seatbelts are not caught.

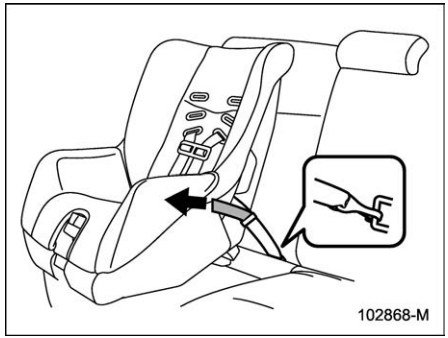

5. If your child restraint system is a flexible attachment type (which uses tether belts), push the child restraint system into the seat cushion and pull both left and right lower tether belts up to secure the child restraint system by taking up the slack in the belt.
6. Attach the tether hook onto the tether anchorage and tighten the tether strap firmly. For additional instructions, refer to "Tether Anchorages" ☞P70.

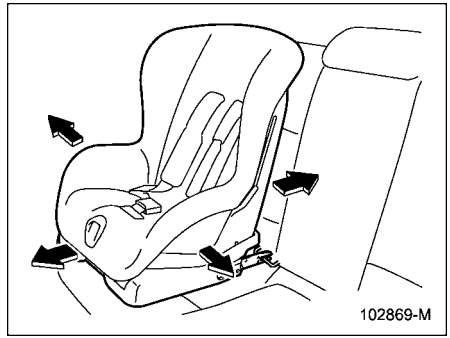

7. Before having a child sit in the child restraint system, try to move it back and forth and right and left to check if it is firmly secured. Sometimes a child restraint system can be more firmly secured by pushing it down into the seat cushion. It should not be possible to move the child restraint system more than 1 in (2.5 cm).
8. To remove the child restraint system, follow the reverse procedures of installation.

SUBARU recommends that you check with a certified Child Passenger Safety Technician to ensure the proper installation of your child restraint system. For more information, and to locate the closest inspection location in the U.S., refer to the National Highway Traffic Safety Adminis-

– CONTINUED –

tration (NHTSA) website. In Canada, check with Transport Canada.

■ Tether Anchorages

Your vehicle is equipped with 3 tether anchorages so that a child restraint system having a tether can be installed in the rear seat. When installing a child restraint system using tether, proceed as follows, while observing the instructions by the child restraint system manufacturer.

Since a tether can provide additional stability by offering another connection between a child restraint system and the vehicle, we recommend that you use a tether whenever one is required or available.

▼ Tether anchorage location

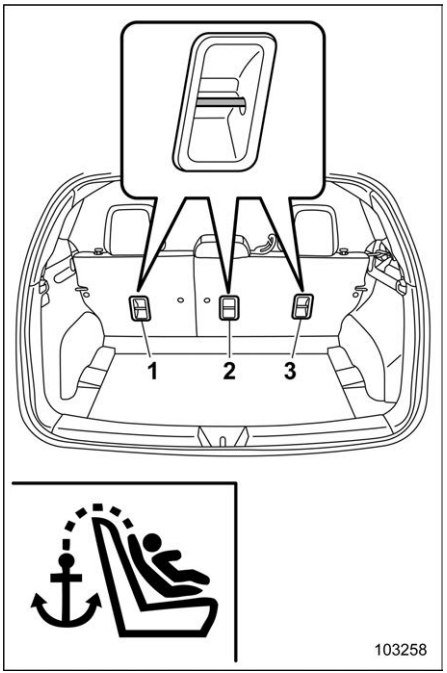

1 For the left seat
2 For the center seat
3 For the right seat

Three tether anchorages are installed on the back side of the rear seatback.

▼ To hook the tether

⚠ CAUTION

- **Except for the center seating position, remove the head restraint when mounting a child restraint system. Otherwise, it might be possible that the tether anchorage cannot be fastened tightly.**
- **Store the head restraint that has been removed in the cargo area. Do not place the head restraint in the passenger compartment to prevent it from being thrown around in the passenger compartment in a sudden stop or a sharp turn.**
- **For the center seating position, raise the center head restraint to the extended position when mounting a child restraint system. Otherwise, it will be impossible to use the seatbelt guide that is attached to the head restraint correctly.**

  The seatbelt guide is essential for routing the belt webbing at the center seating position. For information about using the seatbelt guide, refer to “Rear center

seatbelt” ☞**P44.**

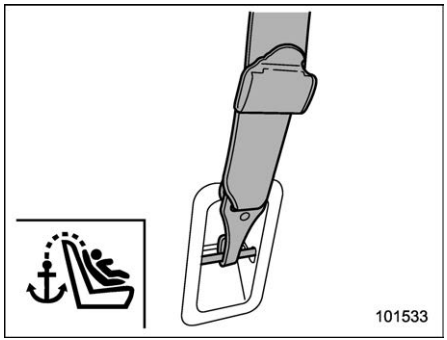

1. Attach the tether strap to the appropriate tether anchorage.
   For the center seating position, route the tether strap under the head restraint as illustrated below.

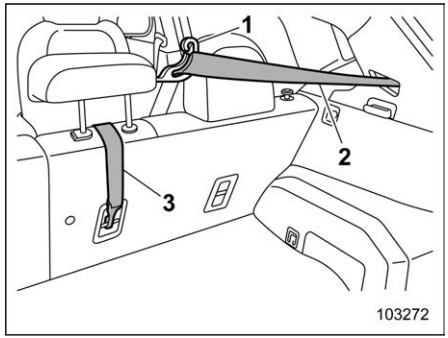

1 Seatbelt guide
2 Seatbelt of the center seating position
3 Tether strap

2. Tighten the tether strap securely.

SUBARU recommends that you check with a certified Child Passenger Safety Technician to ensure the proper installation of your child restraint system. For more information, and to locate the closest inspection location in the U.S., refer to the National Highway Traffic Safety Administration (NHTSA) website. In Canada, check with Transport Canada.

1-9. SRS Airbag (Supplemental Restraint System Airbag)

Supplemental Restraint System (SRS) name is used because the airbag system supplements the vehicle’s seatbelts.

Your vehicle is equipped with a supplemental restraint system in addition to a lap/shoulder belt at each front seating position and each rear window-side seating positions.

The system also controls seatbelt pretensioners. For operation instructions and precautions concerning the seatbelt pretensioner, refer to “Seatbelt Pretensioners” ☞P50.

■ General Precautions Regarding SRS Airbag System

⚠ WARNING

To obtain maximum protection in the event of an accident, the driver and all passengers must always wear seatbelts when in the vehicle. The SRS airbags are designed only to be a supplement to the primary protection provided by the seatbelt. They do not eliminate the need to fasten seatbelts. Used in combination with

– CONTINUED –

the seatbelts, the SRS airbag offers vehicle occupants the best possible protection in the event of a serious accident.

Not wearing a seatbelt increases the chance of severe injury or death in a crash even when the vehicle has the SRS airbag.

For instructions and precautions concerning the seatbelt system, refer to "Seatbelts" ☞P39.

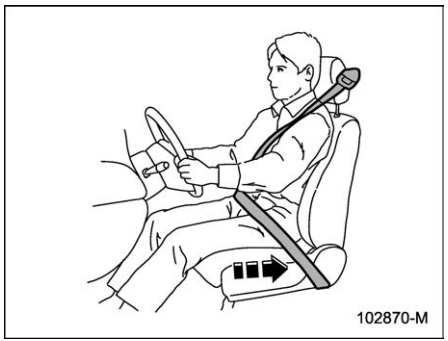

WARNING

The SRS airbags deploy with considerable speed and force. Occupants who are not seated in the proper upright position when the SRS airbag deploys could suffer very serious injuries. Because the SRS airbag needs enough space for deployment, the driver should always sit upright and well back in the seat as far from the steering wheel as practical while still maintaining full vehicle control, and the front passenger should move the seat as far back as possible and sit upright and well back in the seat.

WARNING

- **Do not sit or lean close to either front door. The SRS side airbags are stored in both front seat seatbacks next to the door, and they provide protection by deploying rapidly in the event of a side impact or an offset frontal collision. However, the force of SRS side airbag deployment can injure an occupant if they are too close to an SRS airbag.**
- **Since this vehicle is equipped with SRS curtain airbags, do not sit or lean close to the front or rear door on either side. Do not put body parts out of the window. The SRS curtain airbags on both sides of the cabin are stored in the roof side (between the front pillar and a point behind the rear quarter glass), and they provide protection by deploying rapidly in the event of a side impact, rollover or an offset frontal collision. However, the force of its deployment can injure an occupant if they are too close to an SRS airbag.**
- **Do not sit or lean close to the SRS airbag. Because the SRS airbag deploys with considerable speed and force to protect in high speed collisions, the force of an airbag can injure an occupant whose body is too close to SRS airbag.**

  It is also important to wear a seatbelt to help avoid injuries

that can result when the SRS airbag contacts an occupant who is not seated in the proper upright position.

Even when properly positioned, there remains a possibility that an occupant may suffer minor injuries, such as abrasions and bruises to the face or arms, because of the SRS airbag deployment force.

WARNING

- Keep arms away from either door or its internal trim. Vehicle occupants could be injured in the event of SRS side airbag deployment.
- Do not place any objects over or near the SRS airbag cover or between you and the SRS airbag. If the SRS airbag deploys, these objects could interfere with its proper operation and could be propelled inside the vehicle, causing injury.

CAUTION

- When the SRS airbag deploys, some smoke will be released. This smoke could cause breathing problems for people with a history of asthma or other breathing trouble. If you or your passengers have breathing problems after SRS airbag deploys, get fresh air promptly.
- A deploying SRS airbag releases hot gas. Occupants could get burned if they come into direct contact with the hot gas.

NOTE

- When you sell your vehicle, we urge you to inform the buyer that the vehicle is equipped with SRS airbags. Also, notify the buyer of the applicable section in this Owner's Manual.
- If the SRS airbag deploys, fuel supply will be cut off to reduce the risk of fire caused by leaking fuel. For details about restarting of the engine, refer to "If Your Vehicle Is Involved in an Accident" ☞P430.

■ General Precautions Regarding SRS Airbag System for Accessories and Any Objects

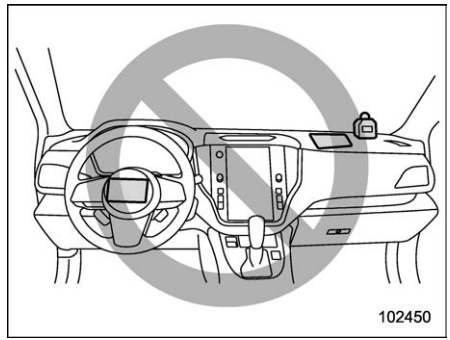

– CONTINUED –

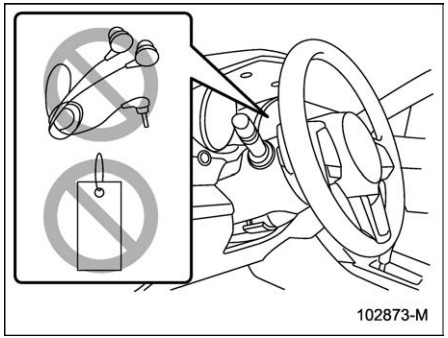

WARNING

- **Do not put any objects (including straps or cords) over the steering wheel pad, column cover, or dashboard.**
  - **These objects could be entangled with the steering wheel, preventing the SRS frontal airbag, etc. from operating properly.**
  - **If the SRS frontal airbag deploys, these objects could be propelled inside the vehicle, causing injury.**
- **Do not put any objects under the driver's side of the instrument panel. If the SRS knee airbag deploys, those objects could interfere with its proper operation and could be propelled inside the vehicle, causing injury.**
- **The key must not be attached to heavy, sharp or hard accessories, or another key. If the SRS knee airbag deploys, those objects could interfere with its proper operation and could be propelled inside the vehicle and cause injury.**

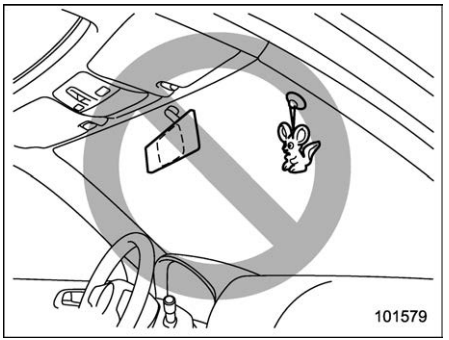

WARNING

Do not attach accessories to the windshield, or fit an extra-wide mirror over the inside rear view mirror. If the SRS airbag deploys, those objects could become projectiles that could seriously injure vehicle occupants.

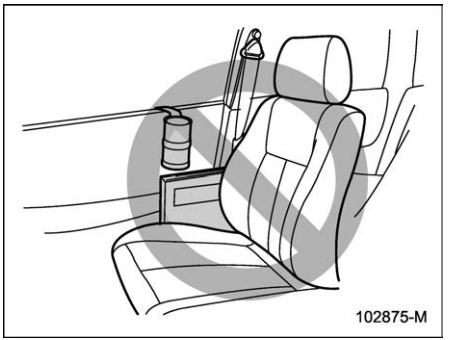

WARNING

- **Do not attach accessories to the door trim or near either SRS side airbags and do not place objects near the SRS side airbags. In the event of SRS side airbag deployment, they could be propelled dangerously toward the vehicle's occupants and cause injuries.**
- **Do not attach a hands-free microphone or any other accessory to a front pillar, a center pillar, a rear**

pillar, the windshield, a side window, an assist grip, or any other cabin surface that would be near a deploying SRS curtain airbag. A hands-free microphone or other accessory in such a location could be propelled through the cabin with great force by the curtain airbag, or it could prevent correct deployment of the curtain airbag. In either case, the result could be serious injuries.

- Never hang or place coat hangers or other hard or pointed objects near the side windows. If such items are present when the SRS curtain airbags deploy, they could be thrown through the passenger compartment and cause serious injuries. They could also prevent proper operation of the SRS curtain airbags.

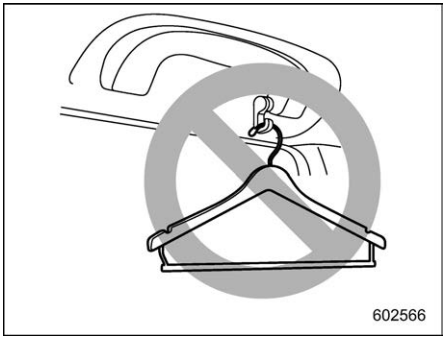

WARNING

Do not hang coat hangers or other hard or pointed objects on the coat hooks. If such items were hanging on the coat hooks during deployment of the SRS curtain airbags, they could cause serious injuries by coming off the coat hooks and being thrown through the cabin or by preventing deployment of the curtain airbags.

Before hanging clothing on the coat hooks, make sure there are no sharp objects in the pockets. Hang clothing directly on the coat hooks without using hangers.

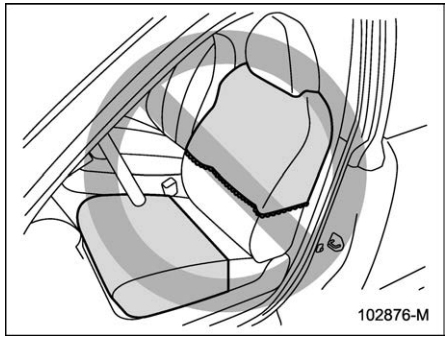

WARNING

- Do not put any kind of clothes or other objects over the driver's seat and front passenger's seatback and do not attach labels or stickers to the driver's seat and front passenger's seat surface on or near the SRS side airbag or the SRS seat cushion airbag. They could prevent proper deployment of the SRS side airbag or the SRS seat cushion airbag, reducing protection available to the occupant of the driver's seat or the front passenger's seat.
- Do not install a seat cover unless it is a genuine SUBARU seat

– CONTINUED –

cover exclusively designed for use with the SRS airbag. Even when using a genuine SUBARU seat cover, the SRS side airbag or the SRS seat cushion airbag may not function normally if the seat cover is not installed correctly.

■ General Precautions Regarding SRS Airbag System and Children

⚠ WARNING

SUBARU strongly recommends that ALL infants and children (including those in child restraint systems) sit in the REAR seat properly restrained in a child restraint system or in a seatbelt, whichever is appropriate for the child's age, height and weight. The SRS airbag deploys with considerable speed and force and can injure or even kill children, especially if they are not restrained or improperly restrained. Because children are lighter and weaker than adults, their risk of being injured from deployment is greater. According to accident statistics, children are safer when properly restrained in the rear seating positions than in the front seating positions. For instructions and precautions concerning child restraint systems, refer to "Child Restraint Systems" ☞P54.

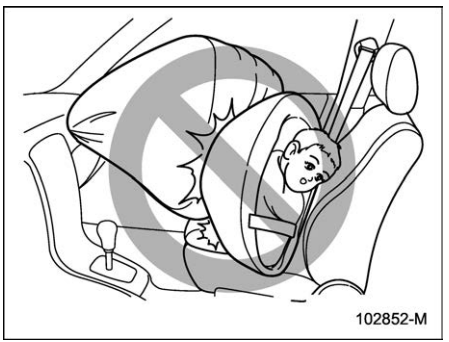

⚠ WARNING

NEVER INSTALL A REARWARD FACING CHILD RESTRAINT SYSTEM ON THE FRONT PASSENGER'S SEAT, AND NEVER INSTALL A FORWARD FACING CHILD RESTRAINT SYSTEM ON THE FRONT PASSENGER'S SEAT IF THE FRONT PASSENGER'S FRONTAL AIRBAG ON INDICATOR LIGHT ILLUMINATES. DOING SO RISKS SERIOUS INJURY OR DEATH TO THE CHILD BY PLACING THE CHILD'S HEAD TOO CLOSE TO THE SRS AIRBAG.

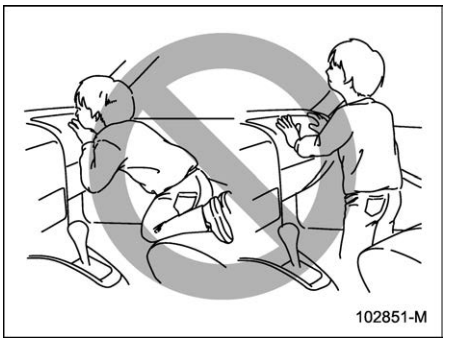

WARNING

Never allow a child to stand up or kneel on the front passenger's seat. The SRS airbag deploys with considerable force and can injure or even kill the child.

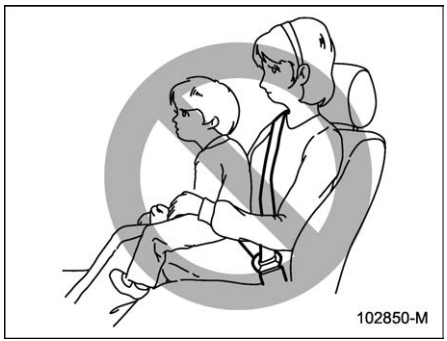

WARNING

Never hold a child on your lap or in your arms. The SRS airbag deploys with considerable force and can injure or even kill the child.

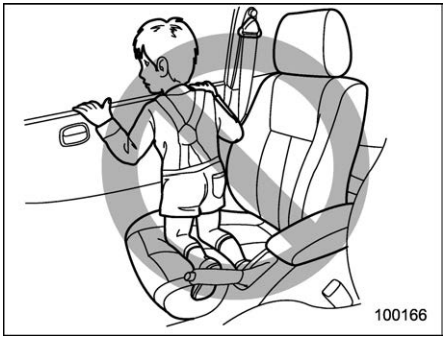

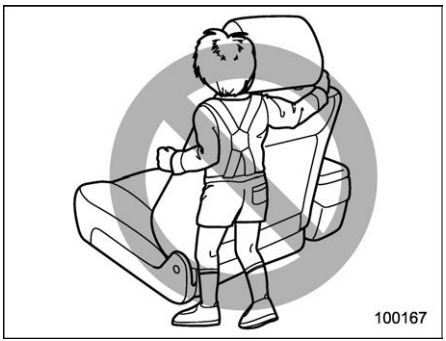

WARNING

- **Never allow a child to do the following.**
  - **Kneel on any passenger's seat facing the side window.**
  - **Wrap his/her arms around the front seat seatback.**
  - **Put his/her head, arms or other parts of the body out of the window.**

  In the event of an accident, the force of SRS side airbag and/or SRS curtain airbag deployment could injure the child seriously because his/her head, arms or other parts of the body are too close to the SRS side airbag and/or SRS curtain airbag.
- **Since your vehicle is also equipped with a front passenger's SRS frontal airbag, children and infants should be placed on the rear seat anyway and should be properly restrained at all times.**

– CONTINUED –

■ Components

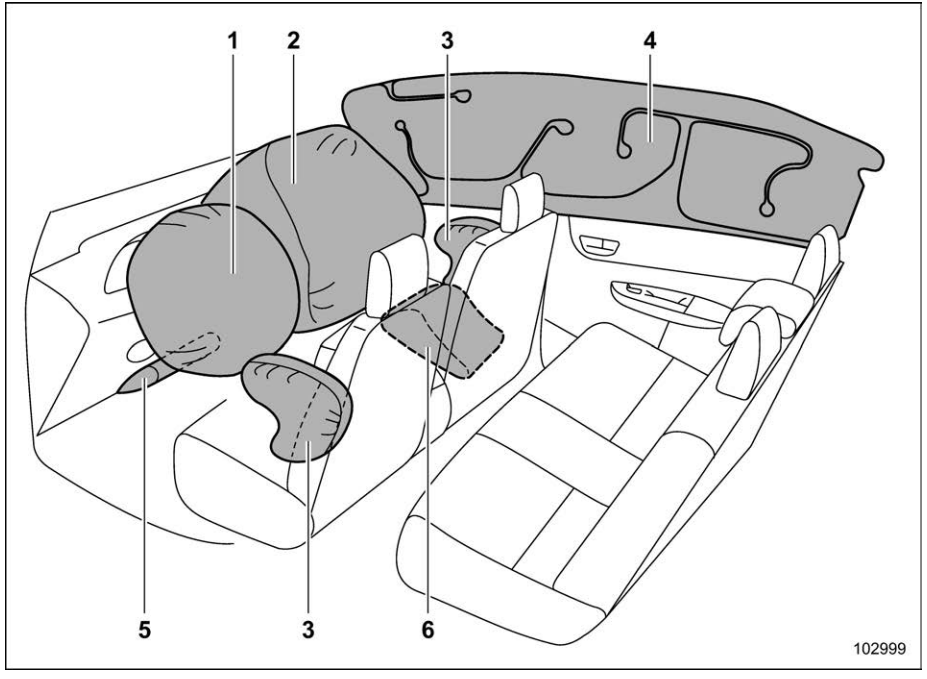

The SRS airbags are stowed in the following locations.

1 **Driver's SRS frontal airbag:** in the center portion of the steering wheel
2 **Front passenger's SRS frontal airbag:** near the top of the dashboard
3 **SRS side airbag:** in the door side of each front seat seatback
4 **SRS curtain airbag:** in the roof side (between the front pillar and a point over the rear seat)
5 **SRS knee airbag:** under the steering column
6 **SRS seat cushion airbag:** in the front passenger's seat cushion

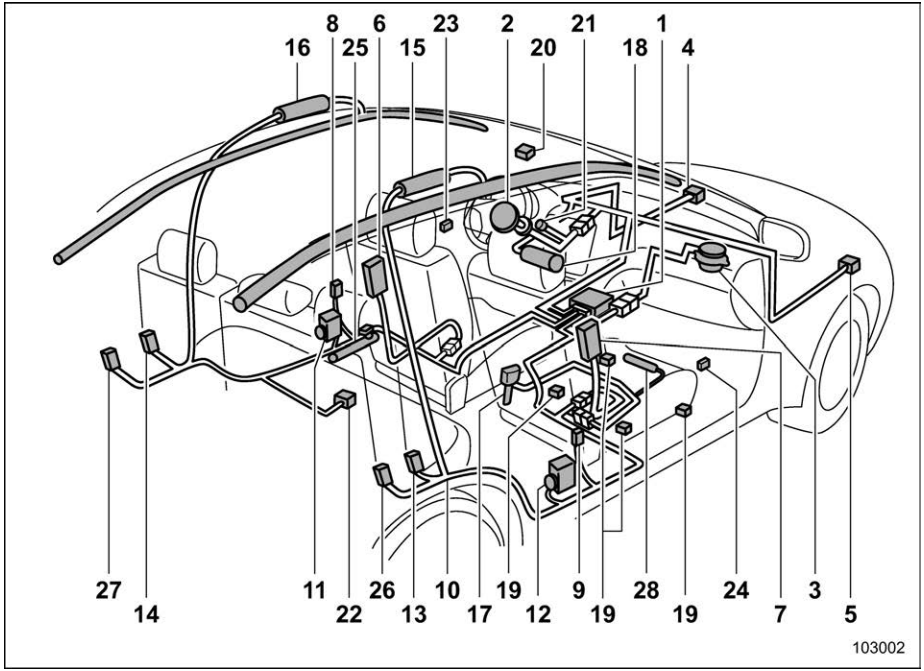

1 Airbag control module (including impact sensors and rollover sensor)
2 Frontal airbag module (driver's side)
3 Frontal airbag module (front passenger's side)
4 Front impact sensor (left-hand side)
5 Front impact sensor (right-hand side)
6 Side airbag module (driver's side)
7 Side airbag module (front passenger's side)
8 Side impact sensor (center pillar left-hand side)
9 Side impact sensor (center pillar right-hand side)
10 Airbag wiring
11 Seatbelt pretensioner (driver's side)
12 Seatbelt pretensioner and adaptive force limiter (front passenger's side)
13 Side impact sensor (rear wheel house right-hand side)
14 Side impact sensor (rear wheel house left-hand side)
15 Curtain airbag module (right-hand side)
16 Curtain airbag module (left-hand side)
17 Seatbelt buckle switch (front passenger's side)
18 Knee airbag module (driver's side)
19 Front passenger's occupant detection sensors
20 Front passenger's frontal airbag ON and OFF indicator lights
21 SRS airbag system warning light
22 Side impact sensor (under the rear center seat)
23 Side impact sensor (front door left-hand side)
24 Side impact sensor (front door right-hand side)
25 Lap belt pretensioner (driver's side)
26 Rear seatbelt pretensioner (front passenger's side)
27 Rear seatbelt pretensioner (driver's side)
28 Seat cushion airbag module (front passenger's side)

– CONTINUED –

■ SUBARU Advanced Frontal Airbag System

This vehicle is equipped with a SUBARU advanced frontal airbag system that complies with the new advanced frontal airbag requirements in the amended Federal Motor Vehicle Safety Standard (FMVSS) No. 208.

The SUBARU advanced frontal airbag system automatically determines the deployment force of the driver's SRS frontal airbag at the time of deployment as well as whether or not to activate the front passenger's SRS frontal airbag and, if activated, the deployment force of the SRS frontal airbag at the time of deployment.

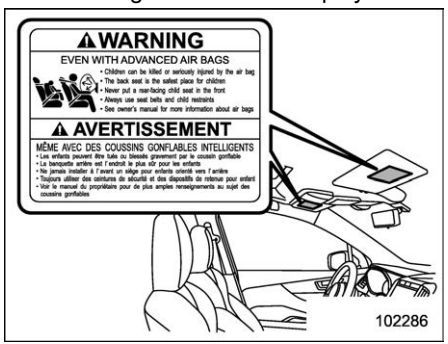

This vehicle has warning labels on the driver's and front passenger's sun visors beginning with the phrase "EVEN WITH ADVANCED AIR BAGS" and a tag attached to the glove box lid beginning with the phrase "Even with Advanced Air Bags". Make sure that you carefully read the instructions on the warning labels and tag.

Always wear your seatbelt. The SUBARU advanced frontal airbag system is a supplemental restraint system and must be used in combination with a seatbelt. All occupants should wear a seatbelt or be seated in an appropriate child restraint system.

For the locations of the SRS airbags, refer to "Components" ☞P78.

In a moderate to severe frontal collision, the following components deploy.

- SRS frontal airbag for driver
- SRS frontal airbag for front passenger
- SRS seat cushion airbag for front passenger
- SRS curtain airbag*1
- SRS side airbag*1
- SRS knee airbag for driver

*1: When an offset frontal collision that is severe enough to deploy the front airbag occurs.

These components supplement the seatbelts by reducing the impact to the occupant's head, chest and knees.

NOTE

Only driver's SRS frontal airbag and front passenger's SRS frontal airbag are controlled by the SUBARU advanced frontal airbag system.

▼ Driver's SRS frontal airbag

The driver's SRS frontal airbag uses a dual stage inflator. The inflator operates in different ways depending on the severity of impact.

▼ Front passenger's SRS frontal airbag

The front passenger's SRS frontal airbag uses a dual stage inflator. The inflator operates in different ways depending on the severity of impact.

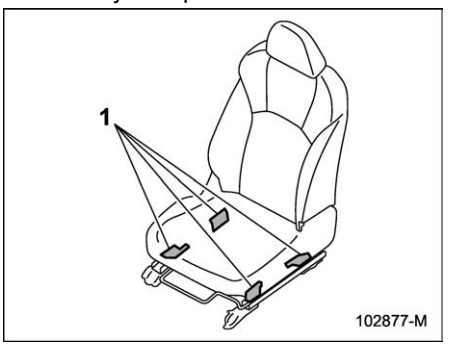

1 Occupant detection sensors

The occupant detection sensors are installed between the seat and seat rails, and monitor the physique and posture of the front passenger. Using this information, the occupant detection system determines whether the front passenger's SRS frontal airbag should be deployed or not.

The occupant detection system may not inflate the front passenger's SRS frontal airbag even when the driver's SRS frontal airbag deploys. This is normal. In this case, although the front passenger's SRS frontal airbag does not operate, the front passenger's seatbelt pretensioner operates with the driver's seatbelt pretensioner. For details about the seatbelt pretensioner, refer to "Seatbelt Pretensioners" ☞P50.

CAUTION

Observe the following precautions. Failure to do so may prevent the SUBARU advanced frontal airbag system from functioning correctly or cause the system to fail.

- **Do not apply any strong impact to the front passenger's seat such as by kicking.**
- **Do not let rear passengers rest their feet between the front seatback and seat cushion.**
- **Do not spill liquid on the front passenger's seat. If liquid is spilled, wipe it off immediately.**
- **Do not remove or disassemble the front passenger's seat.**
- **Do not install any accessory (such as an audio amplifier) other than a genuine SUBARU accessory under the front passenger's seat.**
- **Do not place anything (shoes, umbrella, etc.) under the front passenger's seat.**
- **Do not place any objects (books, etc.) around the front passenger's seat.**
- **Do not use the front passenger's seat with the head restraint removed.**
- **Do not leave any articles on the front passenger's seat or the seatbelt tongue and buckle engaged when you leave your vehicle.**
- **Do not put sharp object(s) on the seat or pierce the seat upholstery.**
- **Do not place a magnet near the seatbelt buckle and the seatbelt retractor.**
- **Do not use front seats with their backward-forward position and seatback not being locked into place securely. If any of them are not locked securely, adjust them again. For adjusting procedure, refer to "Manual Seat" ☞P31 (models equipped with manual seats only).**

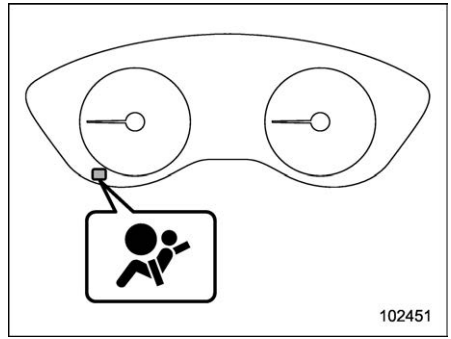

SRS airbag system warning light

If the seatbelt buckle switch and/or front passenger's occupant detection system have failed, the SRS airbag system warning light will illuminate. If the SRS airbag system warning light illuminates, immediately stop the vehicle in a safe place, and consult a SUBARU dealer.

If your vehicle has sustained impact, this

– CONTINUED –

may affect the proper function of the SUBARU advanced frontal airbag system. Have your vehicle inspected at your SUBARU dealer. Do not use the front passenger's seat while driving the vehicle to your SUBARU dealer.

▼ Passenger's frontal airbag ON and OFF indicator lights

ON: Front passenger's frontal airbag ON indicator light

OFF: Front passenger's frontal airbag OFF indicator light

Refer to "Front Passenger's Frontal Airbag ON and OFF Indicator Lights" ☞P158.

▼ Occupant detection system

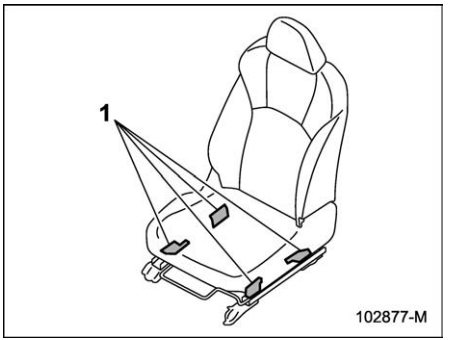

1 Occupant detection sensors

The occupant detection sensors are installed between the seat and seat rails, and monitor the physique and posture of the front passenger. Using this information, the occupant detection system determines whether the following airbags should be deployed or not.

- Front passenger's SRS frontal airbag
- Front passenger's SRS seat cushion airbag

⚠ WARNING

Do not kick the front passenger seat or subject it to severe impact. Otherwise, the SRS airbag system warning light may illuminate to indicate a malfunction of the front passenger occupant detection system. In this case, immediately stop the vehicle in a safe place, and consult a SUBARU dealer.

ON: Front passenger's frontal airbag ON indicator light

OFF: Front passenger's frontal airbag OFF indicator light

If the front passenger's frontal airbag ON and OFF indicator lights do not work properly, do not allow anyone to sit on the front passenger's seat and have the occupant detection system checked by your SUBARU dealer.

ON: Front passenger's frontal airbag ON indicator light

OFF: Front passenger's frontal airbag OFF indicator light

Also, if luggage are placed on the front passenger's seat, this may adversely affect the ability of the system to determine deployment. This may prevent the front passenger's frontal airbag ON and OFF indicator lights from working properly. Check that the indicator lights work properly.

When the OFF indicator light turns off and the ON indicator light illuminates, the front passenger's frontal airbag may deploy during a collision. Remove luggage from the front passenger's seat.

▼ Conditions in which front passenger's SRS frontal airbag is not activated

The front passenger's SRS frontal airbag will not be activated when any of the following conditions are met regarding the front passenger's seat:

- The seat is empty.
- The seat is equipped with an appropriate child restraint system and an infant or a child is restrained in it. (See WARNING that follows.)
- The front passenger's occupant detection system is malfunctioning.

WARNING

NEVER INSTALL A REARWARD FACING CHILD RESTRAINT SYSTEM ON THE FRONT PASSENGER'S SEAT EVEN IF THE FRONT PASSENGER'S SRS FRONTAL AIRBAG IS DEACTIVATED. Be sure to install it correctly in the REAR seat. Also, it is strongly recommended that any child seat or booster seat be installed in the REAR seat, and that even children who have outgrown a child restraint system be also seated in the REAR seat. This is because children sitting in the front passenger's seat may be killed or severely injured should the front passenger's SRS frontal airbag deploy. REAR seats are the safest place for children.

CAUTION

When the front passenger's seat is occupied by an infant in an appropriate child restraint system, observe the following precautions. Failure to do so may interfere with the proper operation of the occupant detection system, activating the front passenger's SRS frontal airbag even though that seat is occupied by the infant in the child restraint system.

- **Do not place any article on the seat other than the infant in the child restraint system.**
- **Do not place more than one infant in the child restraint system.**
- **Do not install any accessory such as a table or TV onto the seatback.**
- **Do not store a heavy load in the seatback pocket.**
- **Do not allow the rear seat occupant to place his/her hands or**

– CONTINUED –

legs on the front passenger's seatback, or allow him/her to pull the seatback.

▽ **If the front passenger's frontal airbag ON indicator light illuminates and the OFF indicator light turns off even when an infant or a small child is in a child restraint system (including booster seat)**

ON: Front passenger's frontal airbag ON indicator light

1. Turn the ignition switch to the "LOCK"/ "OFF" position.
2. Remove the child restraint system from the seat.
3. By referring to the child restraint manufacturer's recommendations as well as the child restraint system installation procedures in "Child Restraint Systems" ☞P54, correctly install the child restraint system.
4. Turn the ignition switch to the "ON" position and make sure that the front passenger's frontal airbag ON indicator light turns off and the OFF indicator light illuminates.

If still the ON indicator light remains illuminated while the OFF indicator light turns off, take the following actions.

- Ensure that no article is placed on the seat other than the child restraint system and the child occupant.
- Ensure that the backward-forward position and seatback of front passenger's seat are locked into place securely by moving the seat back and forth.
- Ensure that there is no article left in the seatback pocket.

If the ON indicator light still remains illuminated while the OFF indicator light turns off after taking the relevant corrective actions described above, relocate the child restraint system to the rear seat and immediately contact your SUBARU dealer for an inspection.

NOTE

When a child who has outgrown a child restraint system or a small adult is seated in the front passenger's seat, the SUBARU advanced frontal airbag system may or may not activate the front passenger's SRS frontal airbag depending on the occupant's seating posture. Children should always wear a seatbelt when sitting in the seat irrespective of whether the airbag is deactivated or activated. If the front passenger's SRS frontal airbag is activated (the ON indicator light remains illuminated while the OFF indicator light turns off), take the following action.

- **Ensure that no article is placed on the seat other than the occupant.**

If the ON indicator light still remains illuminated while the OFF indicator light turns off despite the fact that the actions noted above have been taken, seat the child in the rear seat and immediately contact your SUBARU dealer for an inspection. Even if the system has passed the dealer inspection, it is recommended that on subsequent trips the child always take the rear seat.

Children who have outgrown a child restraint system should always wear the seatbelt irrespective of whether the airbag is deactivated or activated.

▼ Conditions in which front passenger's SRS frontal airbag is activated

The front passenger's SRS frontal airbag will be activated for deployment upon impact when any of the following conditions are met regarding the front passenger's seat.

- When the seat is occupied by an adult.
- When certain items (e.g. jug of water) are placed on the seat.

When the front passenger's seat is occupied by an adult, observe the following precautions. Failure to do so may lessen the load on the front passenger's seat, deactivating the front passenger's SRS frontal airbag despite the fact that the seat is occupied by an adult. This may result in personal injury.

- Do not allow the rear seat occupant to lift the front passenger's seat cushion using his/her feet.
- Do not place any article under the front passenger's seat, or squeeze any article from behind and under the seat. This may lift the seat cushion.
- Do not squeeze any article between the front passenger's seat and side trim/pillar, door or center console box. This may lift the seat cushion.

▽ If the passenger's frontal airbag OFF indicator light illuminates and the ON indicator light turns off even when the front passenger's seat is occupied by an adult

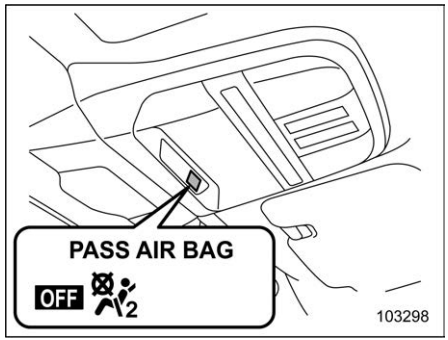

OFF: Front passenger's frontal airbag OFF indicator light

This can be caused by the adult incorrectly sitting in the front passenger's seat.

1. Turn the ignition switch to the "LOCK"/"OFF" position.
2. Ask the front passenger to set the seatback to the upright position, sit up straight in the center of the seat cushion, correctly fasten the seatbelt, position his/her legs out forward, and adjust the seat to the rearmost position.
3. Turn the ignition switch to the "ON" position.

If the OFF indicator remains illuminated while the ON indicator remains off, take the following actions.

1. Turn the ignition switch to the "LOCK"/"OFF" position.
2. Make sure that the front passenger does not use a blanket, extra seat cushion, seat cover, seat heater or massager, etc.
3. If wearing excessive layers of clothing, the front passenger should remove any unnecessary items before sitting in the front passenger's seat, or should sit in a rear seat.
4. Turn the ignition switch to the "ON" position and wait 6 seconds to allow the system to complete self-checking. Following the system check, both indicator lights turn off for 2 seconds. Now, the ON indicator light should illuminate while the OFF indicator light remains off.

If the OFF indicator light still remains illuminated while the ON indicator light remains off, ask the occupant to move to

– CONTINUED –

the rear seat and immediately contact your SUBARU dealer for an inspection.

▼ Operation

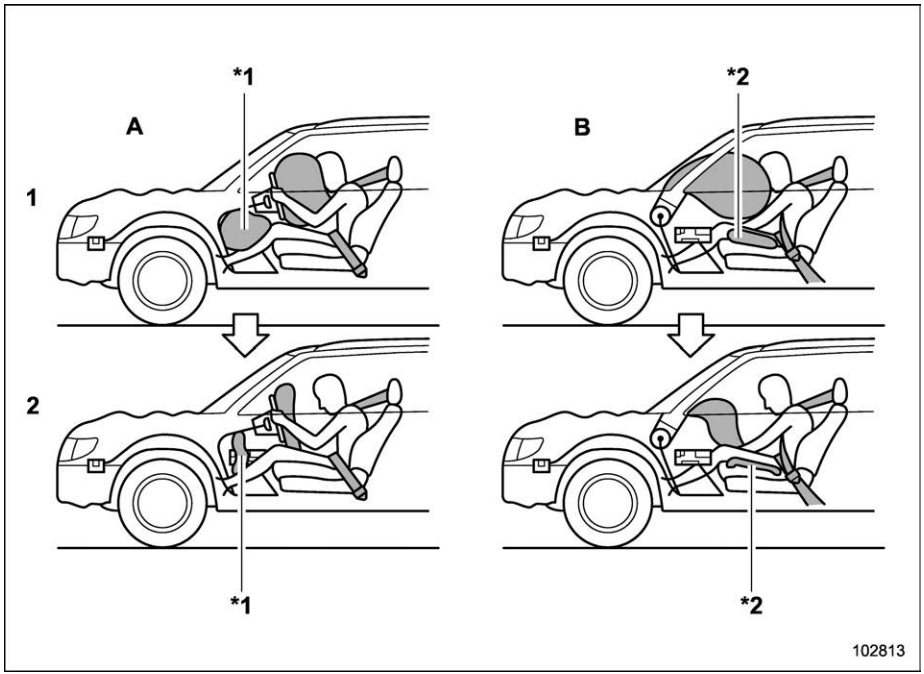

A Driver's side
B Passenger's side

1 SRS AIRBAGs deploy as soon as a collision occurs.
2 After deployment, SRS AIRBAGs start to deflate immediately so that the driver's vision is not obstructed.

*1: Knee airbag
*2: Seat cushion airbag

The SRS airbags can function only when the ignition switch is in the "ON" position.

The SUBARU advanced frontal airbag system is designed to determine the activation or deactivation condition of the front passenger's SRS frontal airbag depending on the characteristic of item(s) or person on the front passenger's seat monitored by the front passenger's occupant detection sensors. For this reason, only the driver's SRS frontal airbag may deploy in the event of a collision, but this does not mean failure of the system.

If the following sensors detect a predetermined amount of force during a frontal collision, the control module sends signals to the airbag module(s) (only driver's module or both driver's and front passenger's modules) instructing the module(s) to inflate the SRS frontal airbag(s).

– CONTINUED –

- The front impact sensors
- The impact sensors in the airbag control module

On the driver's side, the SRS knee airbag also inflates with the SRS frontal airbag.

▼ After deployment

After deployment, the SRS airbag immediately starts to deflate so that the driver's vision is not obstructed and the driver's ability to maintain control of the vehicle is not impaired.

Both when only the driver's SRS frontal airbag deploys and the driver's and front passenger's SRS frontal airbags deploy, the driver's and front passenger's seatbelt pretensioners operate at the same time.

When the SRS airbag deploys, a sudden, fairly loud inflation noise will be heard and some smoke will be released. These occurrences are a normal result of the deployment. This smoke does not indicate a fire in the vehicle.

⚠ CAUTION

Do not touch the SRS airbag system components around the steering wheel and dashboard with bare hands right after deployment. Doing so can cause burns because the components can be very hot as a result of deployment.

▼ Example of the type of accident

The driver's SRS frontal airbag and front passenger's SRS frontal airbag are designed as follows.

- To deploy in the event of an accident involving a moderate to severe frontal collision
- To function on a one-time-only basis

The driver's SRS frontal airbag and front passenger's SRS frontal airbag are not designed as follows.

- To deploy in most lesser frontal impacts*1
- To deploy in most side or rear impacts or in most rollover accidents*2

*1: Because the necessary protection can be achieved by the seatbelt alone.

*2: Because deployment of only the driver's SRS frontal airbag or both the driver's and front passenger's SRS frontal airbags would not protect the occupant in those situations.

SRS airbag deployment depends on the level of force experienced in the passenger compartment during a collision. That level differs from one type of collision to another, and it may have no bearing on the visible damage done to the vehicle itself.

▽ Example of accident in which the driver's/driver's and front passenger's SRS frontal airbag(s) will most likely deploy

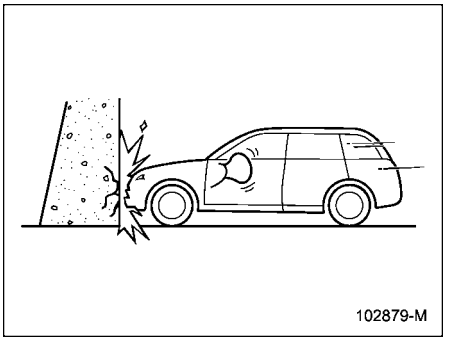

A head-on collision against a thick concrete wall at a vehicle speed of 12 to 19 mph (20 to 30 km/h) or higher activates only the driver's SRS frontal airbag or both driver's and front passenger's SRS frontal airbags. The airbag(s) will also be activated when the vehicle is exposed to a frontal impact similar in fashion and magnitude to the collision described above.

▽ **Examples of the types of accidents in which it is possible that the driver's/driver's and front passenger's SRS frontal airbag(s) will deploy**

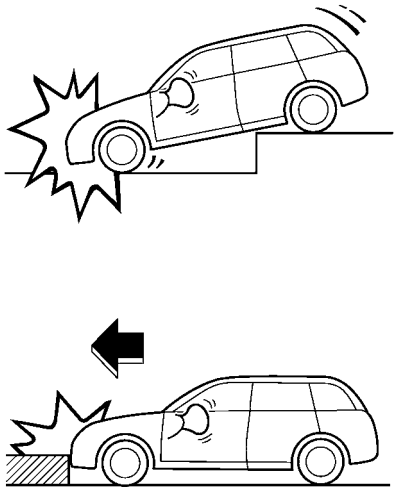

Only the driver's SRS frontal airbag or both driver's and front passenger's SRS frontal airbags may be activated when the vehicle sustains a hard impact in the undercarriage area from the road surface (such as when the vehicle plunges into a deep ditch, is severely impacted or knocked hard against an obstacle on the road such as a curb).

– CONTINUED –

▽ **Examples of the types of accidents in which deployment of the driver's/driver's and front passenger's SRS frontal airbag(s) is unlikely to occur**

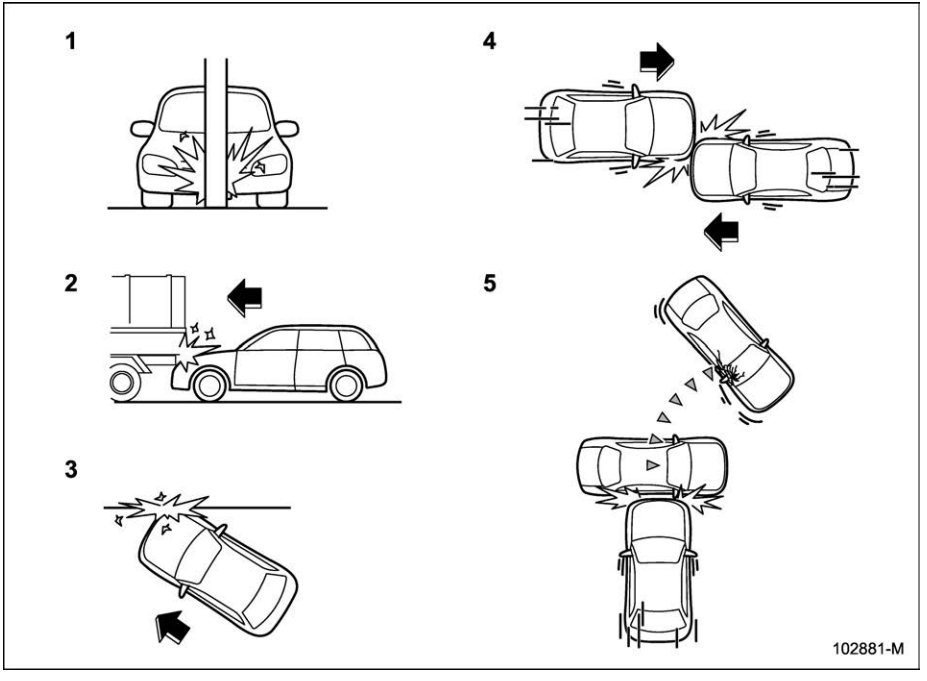

1 The vehicle strikes an object, such as a telephone pole or sign pole.
2 The vehicle slides under the load bed of a truck.
3 The vehicle sustains an oblique offset frontal impact.
4 The vehicle sustains an offset frontal collision.
5 The vehicle strikes an object that can move or deform, such as a parked vehicle.

There are many types of collisions which might not necessarily require deployment of driver's/driver's and front passenger's SRS frontal airbag(s). In the event of accidents like those illustrated, the driver's/driver's and front passenger's SRS frontal airbag(s) may not deploy depending on the level of accident forces involved.

▽ **Examples of the types of accidents in which the driver's/driver's and front passenger's SRS frontal airbag(s) are not designed to deploy in most cases**

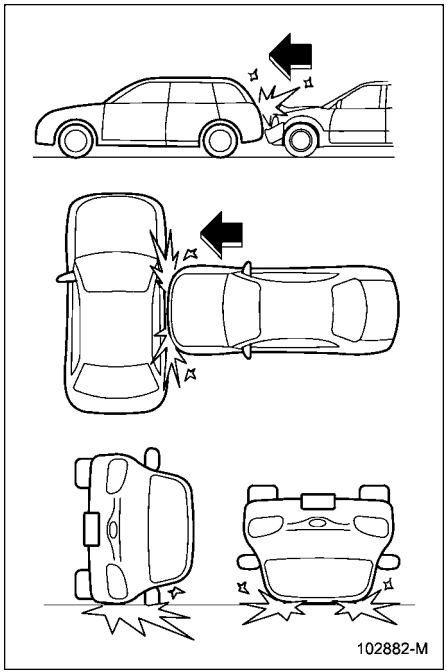

The driver's and front passenger's SRS frontal airbags are not designed to deploy in most of the following cases.

- If the vehicle is struck from the side or from behind
- If the vehicle rolls onto its side or roof
- If the vehicle is involved in a low-speed frontal collision

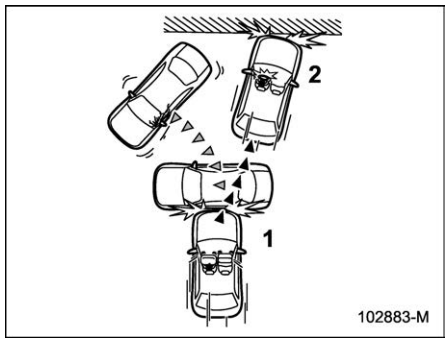

1 First impact
2 Second impact

In an accident where the vehicle is impacted more than once, the driver's and/or front passenger's SRS frontal airbag(s) will deploy only once.

Example: In the case of a double collision, first with another vehicle, then against a concrete wall in immediate succession, once either or both of the driver's and front passenger's SRS frontal airbags is/are activated on the first impact, it/they will not be activated on the second impact.

▼ **SRS seat cushion airbag operation**

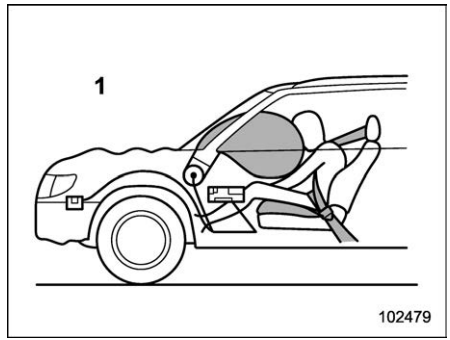

1 Passenger's side

⚠ WARNING

The SRS seat cushion airbag is designed not to deploy when the seatbelt for the corresponding seat is not worn. For safety reasons, all persons in the vehicle should wear their seatbelts.

The SRS seat cushion airbags are designed to deploy simultaneously when the SRS frontal airbags deploy. For details about the operating conditions, refer to

– CONTINUED –

"SUBARU Advanced Frontal Airbag System" ☞P80.

The front passenger's SRS seat cushion airbag is designed not to deploy in either of the following conditions.

- The front passenger's seatbelt is not fastened (even when the front passenger's frontal airbag ON indicator light illuminates while the OFF indicator light remains off).
- The front passenger's frontal airbag ON indicator light is off while the OFF indicator light illuminates.

NOTE

When the front passenger's SRS frontal airbag is deactivated by the occupant detection system, the front passenger's SRS seat cushion airbag is also deactivated.

■ SRS Side Airbag and SRS Curtain Airbag

▼ SRS side airbag

The SRS side airbag is stored in the door side of each front seat seatback, which bears an "SRS AIRBAG" mark.

In a moderate to severe side impact collision, the SRS side airbag on the impacted side of the vehicle deploys between the occupant and the door panel and supplements the seatbelt by reducing the impact on the occupant's chest and waist. The SRS side airbag operates only for front seat occupants.

In an offset frontal collision, SRS side airbags on both sides of the vehicle deploy between the occupant and the door panel and supplements the seatbelt by reducing the impact on the occupant's chest and waist.

▼ SRS curtain airbag

Your vehicle is equipped with a SUBARU SRS curtain airbag system that complies with the Federal Motor Vehicle Safety Standard (FMVSS) No. 226.

The SRS curtain airbag on each side of the cabin is stored in the roof side (between the front pillar and a point over the rear seat). An "SRS AIRBAG" mark is located at the top of each center pillar.

In a moderate to severe side impact collision, the SRS curtain airbag on the impacted side of the vehicle deploys between the occupant and the side window and supplements the seatbelt by reducing the impact on the occupant's head.

In a rollover, SRS curtain airbags on both sides of the vehicle deploy between the occupant and the side window and supplement the seatbelt by reducing the impact to the occupant's head.

In an offset frontal collision, SRS curtain airbags on both sides of the vehicle deploy between the occupant and the side window and supplement the seatbelt by reducing the impact to the occupant's head and chest.

▼ Operation

The following SRS airbags is active only when the ignition switch is in the “ON” position.

- Driver’s SRS side airbag
- Front passenger’s SRS side airbag
- SRS curtain airbag (right-hand side)
- SRS curtain airbag (left-hand side)

When the following sensors detect a certain amount of impact to the side of the vehicle or detect that the vehicle is leaning, airbag control units send signals to the airbag control modules to deploy the airbags.

- The side impact sensors
- The impact sensor in the airbag control module
- The rollover sensor in the airbag control module

Some of the airbags will deploy in a frontal collision. For details, refer to “SUBARU Advanced Frontal Airbag System” ☞P80. SRS airbags are controlled by their airbag control units and deploy as necessary to effectively protect passengers depending on the accident type. Therefore, these airbags may deploy simultaneously.

For the locations of the sensors and control modules, refer to “Components” ☞P78.

▼ After deployment

After the deployment, the SRS side airbag immediately starts to deflate.

The SRS curtain airbag remains inflated for a while following deployment then slowly deflates.

The SRS side airbag and SRS curtain airbag deploy even when no one occupies the seat on the side on which an impact is applied.

When the SRS side airbag and SRS curtain airbag deploy, a sudden, fairly loud inflation noise will be heard and some smoke will be released. These occurrences are a normal result of the deployment. This smoke does not indicate a fire in the vehicle.

⚠ CAUTION

Do not touch the SRS side airbag system components around the front seat seatback with bare hands right after deployment. Doing so can cause burns because the components can be very hot as a result of deployment.

After deployment, do not touch any part of the SRS curtain airbag system (from the front pillar to the part of the roof side over the rear seat). Doing so can cause burns because the components can be very hot as a result of deployment.

▼ Example of the type of accident

The SRS side airbag and SRS curtain airbag are designed as follows:

- To deploy in the event of an accident involving a moderate to severe side impact collision
- To function on a one-time-only basis

The SRS side airbag and SRS curtain airbag are not designed to deploy in the following cases:

- In most lesser side impacts
- In most frontal or most rear impacts (because the SRS side airbag and SRS curtain airbag deployment would not protect the occupant in those situations)

The SRS curtain airbags are also designed to deploy when the vehicle is in an extremely inclined state such as during a rollover. They are not designed to deploy in most lesser inclined state.

– CONTINUED –

SRS side airbag and SRS curtain airbag deployment depend on the level of force experienced in the passenger compartment during a side impact collision. That level differs from one type of collision to another, and it may have no bearing on the visible damage done to the vehicle itself.

▽ **Example of the type of accident in which the SRS side airbag will most likely deploy**

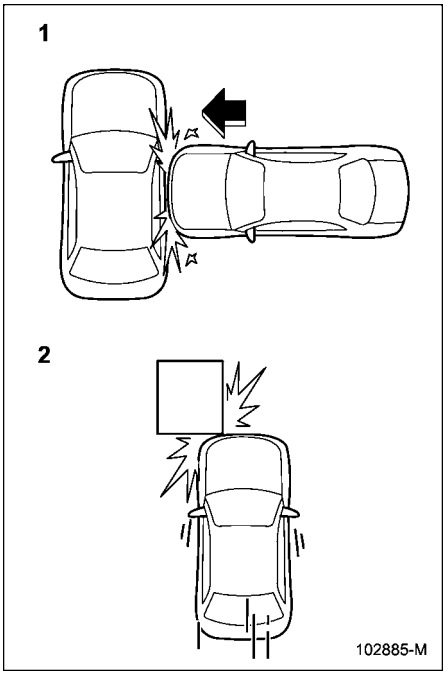

1 A severe side impact near the front seat.
2 An offset frontal collision that is severe enough to deploy the front airbag.

▽ **Examples of the types of accidents in which the SRS curtain airbag will most likely deploy**

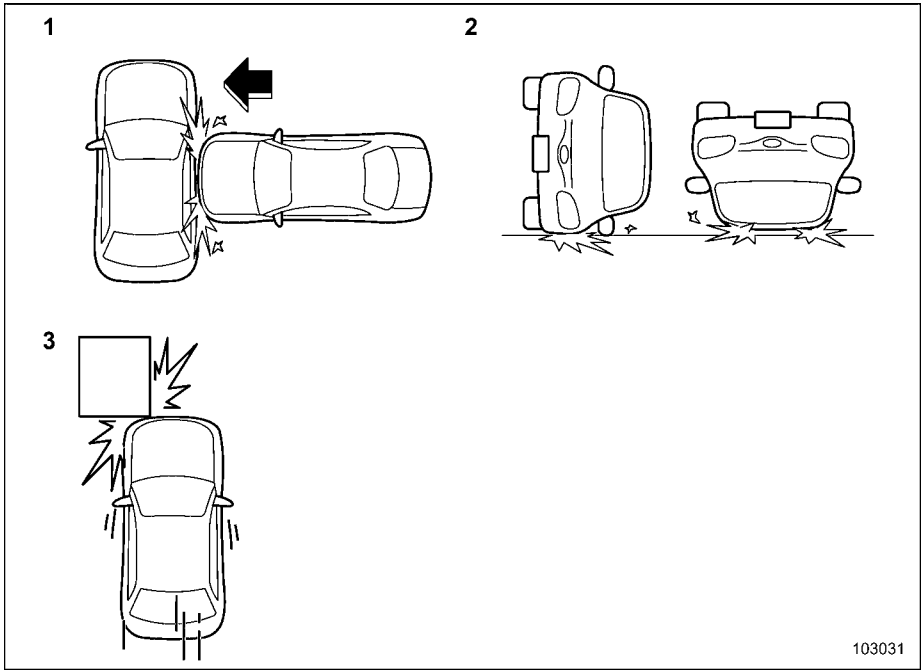

1 The vehicle is involved in a severe side impact near the front seat or the rear seat.
2 The vehicle rolls onto its side or the roof.
3 An offset frontal collision that is severe enough to deploy the front airbag.

– CONTINUED –

▽ **Examples of the types of accidents in which it is possible that the SRS side airbag and the SRS curtain airbag will deploy**

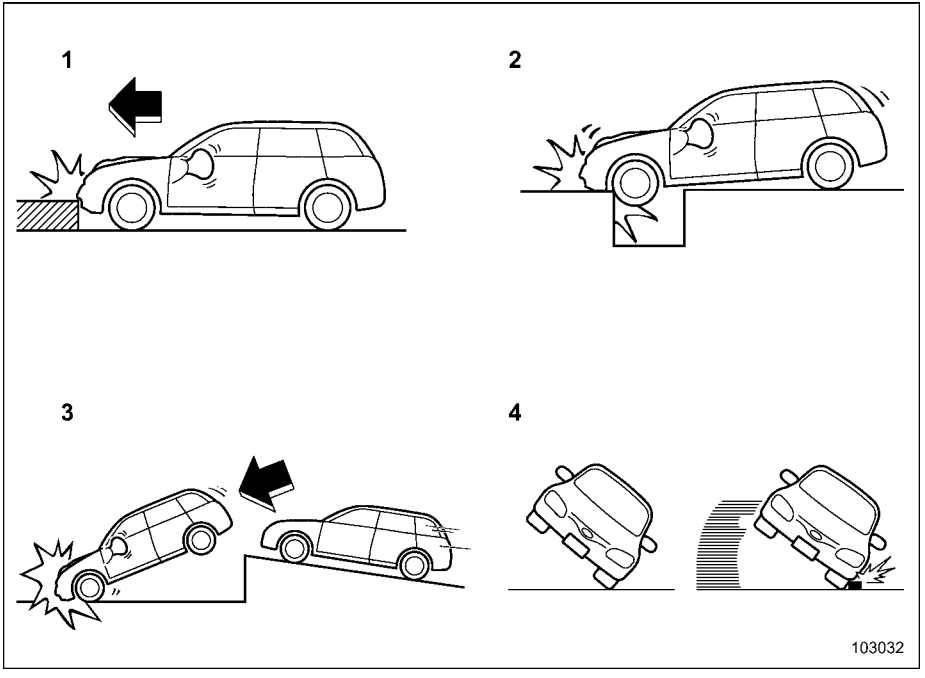

1 Hitting a curb, edge of pavement or hard surface
2 Falling into or jumping over a deep hole
3 Landing hard or vehicle falling
4 The angle of vehicle tip-up is marginal or the skidding vehicle's tires hit a curbstone laterally.

It is possible that the SRS side and curtain airbags will deploy if a serious impact occurs to the underside of your vehicle. Some examples are shown in the illustration.

▽ **Examples of the types of accidents in which the SRS side airbag is unlikely to deploy**

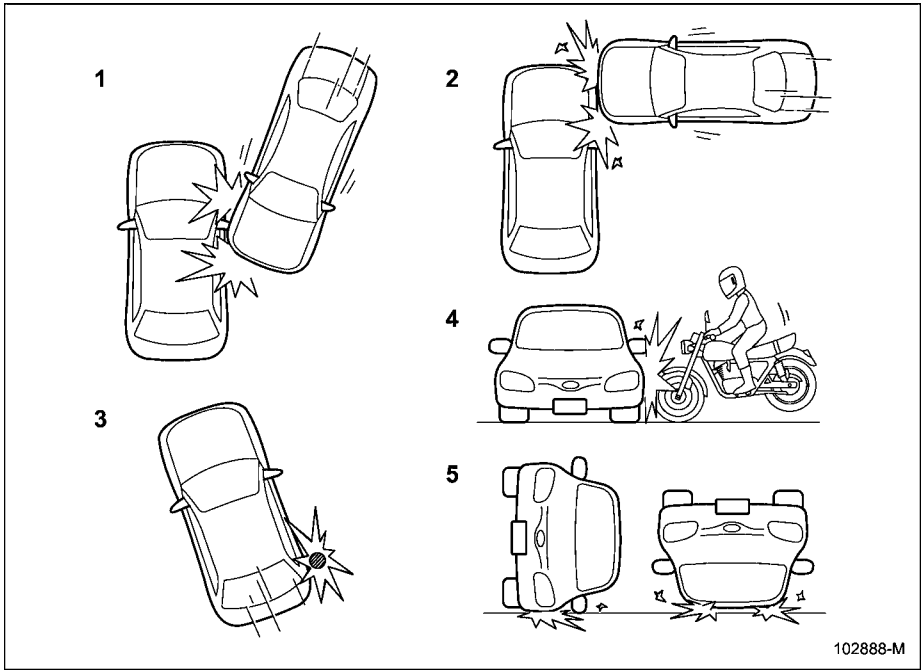

1 The vehicle is involved in an oblique side-on impact.
2 The vehicle is involved in a side-on impact in an area outside the vicinity of the passenger compartment.
3 The vehicle strikes a telephone pole or similar object.
4 The vehicle is involved in a side-on impact from a motorcycle.
5 The vehicle rolls onto its side or the roof.

There are many types of collisions which might not necessarily require SRS side airbag deployment. In the event of accidents like those illustrated, the SRS side airbag may not deploy depending on the level of accident forces involved.

– CONTINUED –

▽ Examples of the types of accidents in which the SRS curtain airbag is unlikely to deploy

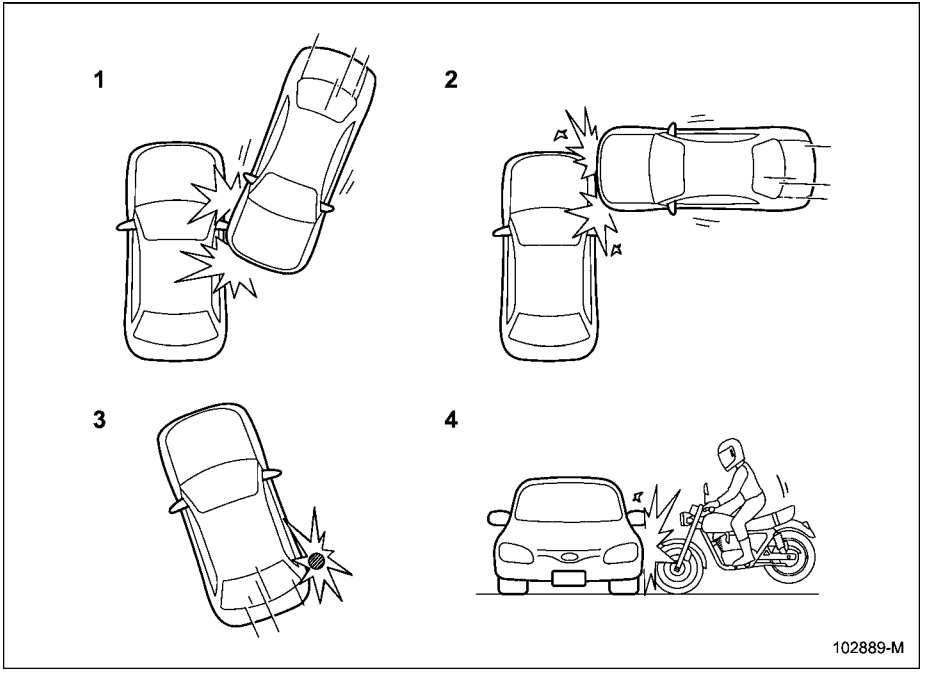

1 The vehicle is involved in an oblique side-on impact.
2 The vehicle is involved in a side-on impact in an area outside the vicinity of the passenger compartment.
3 The vehicle strikes a telephone pole or similar object.
4 The vehicle is involved in a side-on impact from a motorcycle.

There are many types of collisions which might not necessarily require SRS curtain airbag deployment. In the event of accidents like those illustrated, the SRS curtain airbag may not deploy depending on the level of accident forces involved.

▽ **Examples of the types of accidents in which the SRS side airbag and SRS curtain airbag are not designed to deploy in most cases**

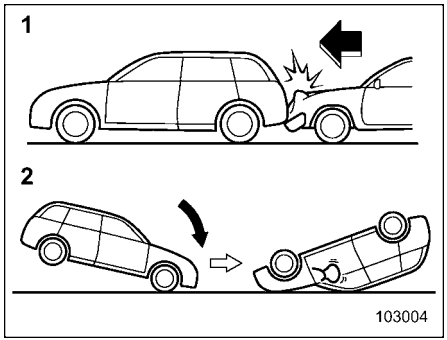

1 The vehicle is struck from behind.
2 The vehicle pitches end over end.

In the event of accidents like those illustrated, the SRS side airbag and SRS curtain airbag are not designed to deploy in most cases.

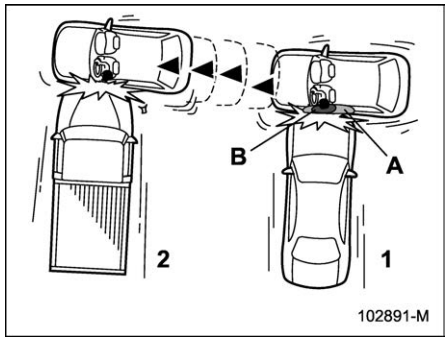

1 First impact
2 Second impact
A SRS curtain airbag
B SRS side airbag

In an accident where the vehicle is struck from the side more than once, the SRS side airbag and SRS curtain airbag deploy only once.

Example: In the case of a double side impact collision, first with one vehicle and immediately followed by another from the same direction, once the SRS side airbag and SRS curtain airbag are activated on the first impact, they will not be activated on the second.

■ SRS Airbag System Monitors

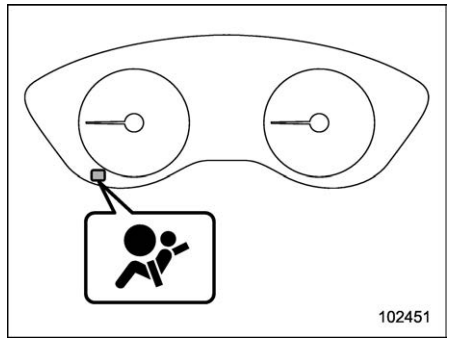

SRS airbag system warning light

A diagnostic system continually monitors the readiness of the SRS airbag system (including seatbelt pretensioners) with the ignition switch in the “ON” position. The SRS airbag system warning light will show normal system operation by illuminating for approximately 6 seconds when the ignition switch is turned to the “ON” position.

The diagnostic system monitors the components to ensure normal operation. For information on the components the system monitors, refer to “Components” ☞P78. Note that the diagnostic system does not monitor the SRS airbag system warning light itself.

– CONTINUED –

WARNING

If the warning light exhibits any of the following conditions, immediately stop the vehicle in a safe place, and consult a SUBARU dealer. Unless a technician checks and repairs the system as needed, the seatbelt pretensioners and/or the SRS airbag will not operate properly in the event of a collision, which may result in injury.

- Flashing or flickering of the warning light
- No illumination of the warning light when the ignition switch is first turned to the "ON" position
- Continuous illumination of the warning light
- Illumination of the warning light while driving

■ SRS Airbag System Servicing

WARNING

- When discarding an airbag module or scrapping the entire vehicle damaged by a collision, consult your SUBARU dealer.
- The SRS airbag has no user-serviceable parts. Do not use electrical test equipment on any circuit related to the SRS airbag system. For required servicing of the SRS airbag, consult your nearest SUBARU dealer. Tampering with or disconnecting the system's wiring could result in accidental inflation of the SRS airbag or could make the system inoperative, which may result in serious injury.

CAUTION

If you need service or repair in areas indicated in the following list, have the work performed by an authorized SUBARU dealer. The SRS airbag control module, impact sensors and airbag modules are stored in these areas.

- Under the center of the instrument panel
- On both the right and left sides at the front of the vehicle
- Steering wheel and column and nearby areas
- Bottom of the steering column and nearby areas
- Top of the dashboard on front passenger's side and nearby areas
- Each front seat and nearby area
- Inside each center pillar
- Inside each front door
- In each roof side (from the front pillar to a point over the rear seat)
- Between the rear seat cushion and rear wheel house on each side
- Under the rear center seat

In the event that the SRS airbag is deployed, replacement of the system should be performed only by an authorized SUBARU dealer. When the components of the SRS airbag system are replaced, use only genuine SUBARU parts.

NOTE

In the following cases, contact your SUBARU dealer as soon as possible.

- The front part of the vehicle was involved in an accident in which only the driver's SRS frontal airbag or both driver's and front passenger's SRS frontal airbags did not deploy.
- The pad of the steering wheel, the cover over the front passenger's

SRS frontal airbag, or either roof side (from the front pillar to a point over the rear seat) is scratched, cracked, or otherwise damaged.

- The center pillar, front door, rear wheel house or rear sub frame, or an area near these parts, was involved in an accident in which the SRS side airbag and SRS curtain airbag did not deploy.
- The fabric or leather of either front seatback is cut, frayed, or otherwise damaged.
- The rear part of the vehicle was involved in an accident in which no SRS airbag was deployed.

Precautions against Vehicle Modification

WARNING

- To avoid accidental activation of the system or rendering the system inoperative, which may result in serious injury, no modifications should be made to any components or wiring of the SRS airbag system.
  This includes following modifications.
  - Installation of custom steering wheels
  - Attachment of additional trim materials to the dashboard
  - Installation of custom seats
  - Replacement of seat fabric or leather
  - Installation of additional fabric or leather on the front seat
  - Attachment of a hands-free microphone or any other accessory to a front pillar, a center pillar, a rear pillar, the windshield, a side window, an assist grip, or any other cabin surface that would be near a deploying SRS curtain airbag.
  - Installation of additional electrical/electronic equipment such as a mobile two-way radio on or near the SRS airbag system components and/or wiring is not advisable. This could interfere with proper operation of the SRS airbag system.
  - Modifications on or inside the front door panels for the purpose of a speaker replacement or sound insulation
- The impact sensors, which detect the pressure of an impact, are located in the doors. Do not modify any components of the doors or door trims, such as the addition of door speakers for example. Any modifications to the doors will create a risk of the airbag system becoming inoperative or unintended airbag deployment.
- Installation of a tire of different size and construction from the tires specified on the vehicle placard attached to the driver's door pillar or specified for individual vehicle models in this Owner's Manual.

CAUTION

Do not perform any of the following modifications. Such modifications can interfere with proper operation of the SRS airbag system.

- Attachment of any equipment (bush bar, winches, snow plow, skid plate, etc.) other than genuine SUBARU accessory parts to the front end.

– CONTINUED –

- **Modification of the suspension system or front end structure.**
- **Attachment of any equipment (side steps or side sill protectors, etc.) other than genuine SUBARU accessory parts to the side body.**

Always consult your SUBARU dealer if you want to install any accessory parts on your vehicle.

How to Contact the Vehicle Manufacturer concerning Modifications for Persons with Disabilities That May Affect the Advanced Airbag System

Changing or moving any parts of the front seats, rear seat, seatbelts, front bumper, front side frame, radiator panel, instrument panel, combination meter, steering wheel, steering column, tire, suspension or floor panel can affect the operation of the SUBARU advanced airbag system. If you have any questions, you may contact the following SUBARU distributors.

<Continental U.S., Alaska and the District of Columbia>
Subaru of America, Inc.
Customer Advocacy Department
One Subaru Drive
P.O. Box 9103
Camden, NJ 08101-9877
1-800-SUBARU3 (1-800-782-2783)

<Hawaii>
Subaru Hawaii
2850-A Pukoloa St.,
Honolulu, HI 96819
877-215-0338

<Guam>
Shen's Corporation dba Prestige Automobiles
491 East Marine Corps Drive,
Dededo, Guam 96929
671-633-2698

<Puerto Rico>
Trebol Motors
296 Marginal JF Kennedy, San Juan, Puerto Rico
787-793-2828

<Canada>
Subaru Canada, Inc.
Customer Care
560 Suffolk Court, Mississauga, Ontario L5R 4J7
1-800-894-4212

There are currently no SUBARU distributors in any other U.S. territories. If you are in such an area, please contact the SUBARU distributor or dealer from which you bought your vehicle.

2-1. Keys (If Equipped) 106
Key Number Plate 106
2-2. Keyless Access with Push-Button Start System (If Equipped) 106
Safety Precautions 107
Locking and Unlocking with “Keyless Access” Entry Function 110
Unlock Using PIN Code Access 113
Power Saving Function 115
Power Saving Function of Access Key Fob 116
Disabling Keyless Access Function 116
Selecting Audible Signal Operation 119
Selecting Hazard Warning Flasher Operation 119
Warning Chimes and Warning Indicator 119
When Access Key Fob Does Not Operate Properly 119
Replacing Battery of Access Key Fob 119
Replacing Access Key Fob 119
Certification for Keyless Access with Push-Button Start System 119
2-3. Immobilizer 121
Security Indicator Light 121
Key Replacement 121
Certification for Immobilizer System 121
2-4. Remote Keyless Entry System 122
Locking the Doors 124
Unlocking the Doors 124
Opening the Rear Gate 124
Setting Audible Signal Operation 124
Selecting Hazard Warning Flasher Operation 125
Vehicle Finder Function 125
Sounding a Panic Alarm 125
Replacing the Battery 125
Replacing Lost Transmitters 125
Certification for Remote Keyless Entry System 125
2-5. Door Locks 127
Locking and Unlocking from the Outside 127
Locking and Unlocking from the Inside 128
Automatic Door Locking/Unlocking 129
Key Lock-In Prevention Function 129
Battery Drainage Reduction Function 130
2-6. Alarm System 131
Alarm System Operation 131
Arming the System 132
Disarming the System 133
Alarm System Setting 133
If You Have Accidentally Triggered the Alarm System 133
Valet Mode 134
2-7. Child Safety Locks 134
2-8. Windows 134
Power Window Operation 135
Initialization of Power Window (Windows with One-Touch Auto Up and Down Function) 137
2-9. Rear Gate 137
2-10. Moonroof (If Equipped) 139
Moonroof Switches 140
Sunshade 141

2-1. Keys (If Equipped)

NOTE

For models with “keyless access with push-button start system”, refer to “Keyless Access with Push-Button Start System” ☞P106.

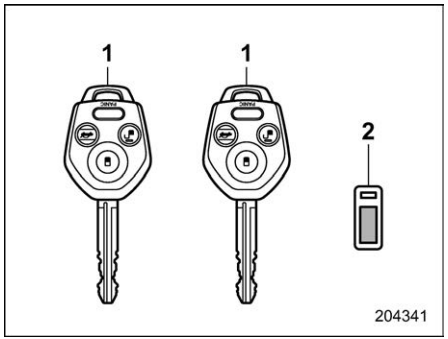

1 Master keys
2 Key number plate

The master key fit all locks on your vehicle.

- Ignition switch
- Driver’s door

NOTE

Locking/unlocking using the remote keyless entry system can also be controlled with the buttons on the key. For detailed information, refer to “Remote Keyless Entry System” ☞P122.

CAUTION

Do not attach a large key holder or key case to either key. If it bangs against your knees while you are driving, it could turn the ignition switch from the “ON” position to the “ACC” or “LOCK” position, thereby stopping the engine.

■ Key Number Plate

The key number is stamped on the key number plate attached to the key set. Write down the key number and keep it in another safe place, not in the vehicle. This number is needed to make a replacement key if you lose your key or lock it inside the vehicle. Refer to “Key Replacement” ☞P121.

2-2. Keyless Access with Push-Button Start System (If Equipped)

The following access key fobs are provided with the vehicle.

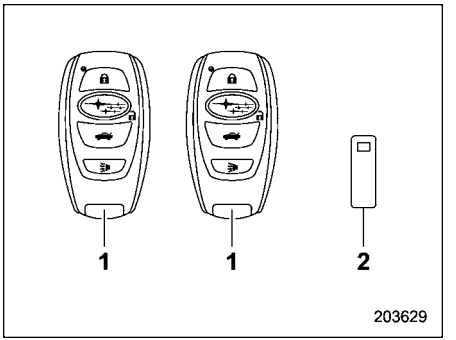

1 Access key fobs
2 Key number plate

The keyless access with push-button start system allows you to perform the following functions when you are carrying the access key fob.

- Locking and unlocking all the doors (including the rear gate and the fuel filler lid)
- Starting and stopping the engine. For detailed information, refer to “Starting and Stopping Engine (Models with

Push-Button Start System)” ☞P314.

- Arming and disarming the alarm system. For detailed information, refer to “Alarm System” ☞P131.

NOTE

- **Locking and unlocking by the remote keyless entry system can also be controlled with the buttons on the access key fob. For detailed information, refer to “Remote Keyless Entry System” ☞P122.**
- **Carefully store the key number plate supplied with the access key fob. It is necessary for vehicle repair and additional registration of access key fobs. For details, refer to “Key Replacement” ☞P121.**

An emergency key is attached to each access key fob.

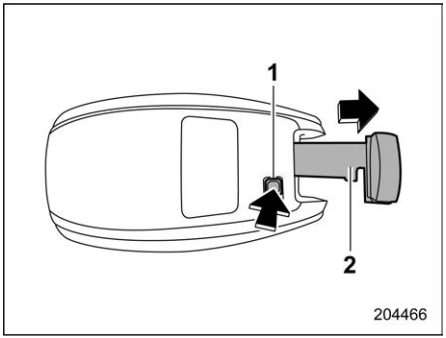

1 Release button
2 Emergency key

While pressing the release button of the access key fob, take out the emergency key.

The emergency key is used for the following operations.

- Locking and unlocking the driver’s door

■ Safety Precautions

WARNING

If you wear an implanted pacemaker or an implanted defibrillator, stay at least 8.7 in (22 cm) away from the transmitting antennas installed on the vehicle.

The radio waves from the transmitting antennas on the vehicle could adversely affect the operation of implanted pacemakers and implanted defibrillators.

If you wear electronic medical equipment other than an implanted pacemaker or an implanted defibrillator, before using the keyless access with push-button start system, refer to “Radio waves used for the keyless access with push-button start system” mentioned later, and contact the electronic medical equipment manufacturer for more information. The radio waves from the transmitting antennas on the vehicle could adversely affect the operation of the electronic medical equipment.

“Radio waves used for the keyless access with push-button start system”

- **The keyless access with push-button start system uses radio waves of the following frequency* in addition to the radio waves used for the remote keyless entry system. The radio waves are periodically output from the antennas installed on the vehicle as shown in the**

– CONTINUED –

following illustrations.
***: Radio frequency: 134 kHz**

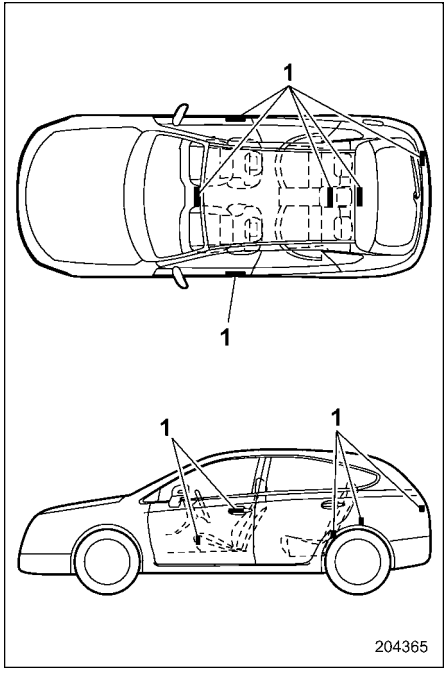

1 Antennas

CAUTION

- **Never leave or store the access key fob inside the vehicle or within 6.6 ft (2 m) around the vehicle (e.g., in the garage). The access key fob may be locked inside the vehicle, or the battery may discharge rapidly. Note that the push-button ignition switch may not turn on in some cases depending on the location of the access key fob.**
- **The access key fob contains electronic components. Observe the following precautions to prevent malfunctions.**
  - **It is recommended to have the access key fob battery replaced at an authorized SUBARU dealer to avoid the risk of damage.**
  - **Do not get the access key fob wet. If the access key fob gets wet, wipe it off immediately and let it dry completely.**
  - **Do not apply strong impacts to the access key fob.**
  - **Never leave the access key fob in direct sunlight or anywhere that may become hot, such as on the dashboard. It may damage the battery or cause circuit malfunctions.**
  - **Do not wash the access key fob in an ultrasonic washer.**
  - **Do not leave the access key fob in humid or dusty locations. Doing so may cause malfunctions.**
  - **Keep the access key fob away from magnetic sources.**
  - **Do not leave the access key fob near a personal computer or home electrical appliance.**
  - **Do not leave the access key fob near a battery charger or any electrical accessories.**
  - **Do not apply metallic window tint or attach metallic objects to the windows.**
  - **Do not fit non genuine accessories or parts.**
- **If the access key fob is dropped, the integrated emergency key inside may become loose. Be careful not to lose the emergency key.**
- **When traveling in an airplane, do not press the button of the access key fob. If any button of the access key fob is pressed, radio**

waves are emitted and may affect the operation of the airplane. In a bag, take measures to prevent the buttons from being pressed accidentally.

NOTE

- The operational/non-operational setting for the keyless access function can be changed. For the setting procedure, refer to "Disabling Keyless Access Function" ☞P116.
- For detailed information about the operation method for the push-button ignition switch while the keyless access function is switched to the non-operational mode, refer to "Access Key Fob – If Access Key Fob Does Not Operate Properly" ☞P426.
- The keyless access with push-button start system uses weak radio waves. The status of the access key fob and environmental conditions may interfere with the communication between the access key fob and the vehicle under the following conditions, and it may not be possible to lock or unlock the doors or start the engine.
  - When operating near a facility where strong radio waves are transmitted, such as a broadcast station and power transmission lines.
  - When products that transmit radio waves are used, such as an access key fob or a remote transmitter key of another vehicle.
  - When carrying the access key fob of your vehicle together with the access key fob or the remote transmitter of another vehicle.
  - When the access key fob is placed near wireless communication equipment such as a cell phone.
  - When the access key fob is placed near a metallic object.
  - When metallic accessories are attached to the access key fob.
  - When carrying the access key fob with an electronic appliance such as a laptop computer.
  - When the battery of the access key fob is discharged.
- The access key fob is always communicating with the vehicle and is continuously using the battery. Although the life of the battery varies depending on the operating conditions, it is approximately 1 to 2 years. If the battery becomes fully discharged, replace it with a new one.
- If an access key fob is lost, it is recommended that all of the remaining access key fobs be reregistered. For reregistration of an access key fob, contact a SUBARU dealer.
- For a spare access key fob, contact a SUBARU dealer.
- Up to 7 access key fobs can be registered for one vehicle.
- Do not leave the access key fob in the storage spaces inside the vehicle, such as the door pocket, dashboard or inside the cargo area. Vibrations may damage the key fob or turn on the switch, possibly resulting in a lockout.
- After the vehicle battery is discharged or replaced, initialization of the steering lock system may be required to start the engine. In this case, perform the following procedure to initialize the steering lock.
  (1) Turn the push-button ignition switch to the "OFF" position. For details, refer to "Switching Power Status" ☞P149.
  (2) Open and close the driver's door.
  (3) Wait for approximately 10 seconds.

– CONTINUED –

When the steering is locked, the initialization is completed.

- **Do not leave the access key fob in the following places.**
  - **On the instrument panel**
  - **On the floor**
  - **Inside the glove box**
  - **Inside the door trim pocket**
  - **On the rear seat**
  - **On the rear shelf**
  - **Inside the cargo area**

  If you do, the following situations may occur.
  - **The access key fob is mistakenly locked inside the vehicle.**
  - **A false warning issues although no malfunction actually occurs.**
  - **No warning issues even when a malfunction occurs.**

■ Locking and Unlocking with "Keyless Access" Entry Function

When the access key fob is carried within the operating range, all the doors (including the rear gate and the fuel filler lid) can be locked/unlocked just by touching the door handle.

NOTE

The vehicle can also be locked/unlocked with the remote keyless entry system. For details, refer to "Remote Keyless Entry System" ☞P122.

▼ Operating ranges

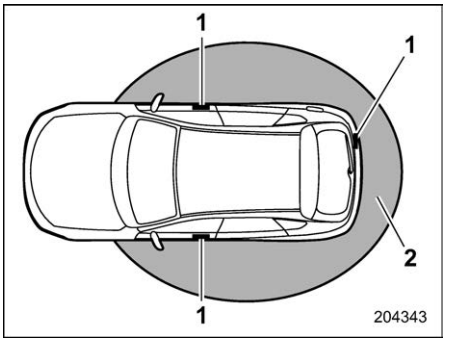

1 Antennas
2 Operating range

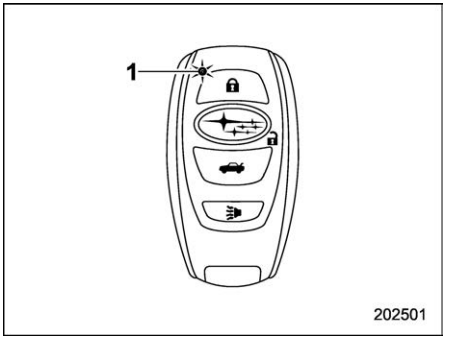

1 LED indicator

When the access key fob is within the operating range, the LED indicator on the access key fob flashes. When the keyless access functions are disabled, the LED indicator does not flash unless a button on the access key fob is pressed.

NOTE

- **If the access key fob is placed too close to the vehicle body, the keyless access functions may not operate properly. If it does not operate properly, repeat the operation from farther away.**
- **If the access key fob is placed near the ground or in an elevated location from the ground, even if it is in the indicated operating range, the key-**

less access function may not operate properly.

- When the access key fob is within the operating range, it is possible for anyone, even someone who is not carrying the access key fob, to operate the keyless access function. Note that the keyless access function can be operated only by the door handle, door lock sensor or rear gate opener button in the operating range in which the access key fob is detected.
- It is not possible to lock the doors, the rear gate and the fuel filler lid using the keyless access function when the access key fob is inside the vehicle. However, depending on the status of the access key fob and the environmental conditions, the access key fob may be locked inside the vehicle. Before locking the vehicle, make sure that you have the access key fob.
- When the battery of the access key fob is discharged, or when operating it in a location with strong radio waves or noise (e.g., near a radio tower, power plant, broadcast station or an area where wireless equipment is used), or while talking on a cell phone, the operating ranges may be reduced, or the keyless access function may not operate. In such a case, perform the procedure described in "Locking and Unlocking" ☞P426.
- The doors may lock or unlock when the car is being washed or exposed to a significant amount of water that touches the door handle while the key fob is still in the operating range.

▼ How to lock and unlock

It is possible to perform the following operations when you are carrying the access key fob.

- Lock and unlock the doors and the fuel filler lid.
- Lock and unlock the rear gate.

NOTE

- It is not possible to lock the doors, the rear gate and the fuel filler lid using the keyless access function when the push-button ignition switch is in the "ACC" or "ON" position. Refer to "Switching Power Status" ☞P149.
- If the door handle is gripped with a gloved hand, the door lock may not be released.
- If the door lock sensor is touched four times or more repeatedly, the system will ignore the sensor operation.
- When performing the locking procedure too quickly, locking may not complete. After performing the locking procedure, it is recommended to pull the rear door handle to confirm that the doors have been locked.
- If any of the doors (including the rear gate) is not fully closed, the following will occur to alert you.
  - An electronic chirp sounds five times.
  - The hazard warning flashers flash five times.
- If any of the doors or the rear gate is open, the doors, the rear gate and the fuel filler lid cannot be locked.
- Within 3 seconds after locking the doors and the rear gate using the keyless access function, it is not possible to unlock the doors and/or the rear gate using the keyless access function.
- When locking, be sure to carry the access key fob to prevent locking the access key fob in the vehicle.
- The setting of the hazard warning flasher operation can be changed by operating the center information display. For details, refer to "Car settings" ☞P201 (11.6-inch display models) or "Vehicle setting icons"

– CONTINUED –

☞P219 (dual 7.0-inch display models). Also, the setting of the hazard warning flasher operation can be changed by your SUBARU dealer. Contact your SUBARU dealer for details.

▽ Locking with the door lock sensor

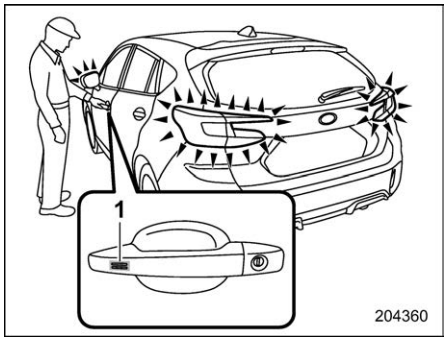

1 Door lock sensor

Carry the access key fob, close all the doors (including the rear gate) and touch the door lock sensor on the door handle. All the doors (including the rear gate and the fuel filler lid) will be locked. Also, an electronic chirp will sound once and the hazard warning flashers will flash once.

NOTE

After touching the door lock sensor to lock all of the doors (including the rear gate), if you touch the door lock sensor once more to attempt the lock operation without first unlocking the doors, nothing will happen, even if the door lock sensor is touched. In this case, perform the unlocking operation once first. You can then touch the door lock sensor to lock the doors.

▽ Locking with the rear lock button

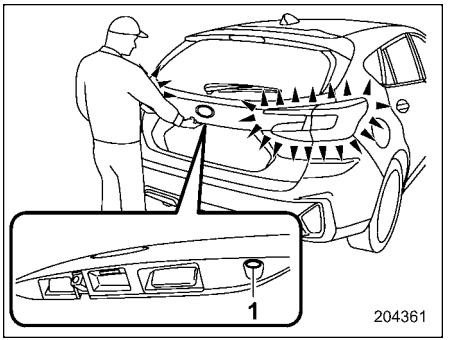

1 Rear lock button

Carry the access key fob, close all doors including the rear gate and press the rear lock button. The rear gate, the fuel filler lid and all doors will be locked. Also, the hazard warning flashers will flash once.

▽ Unlocking

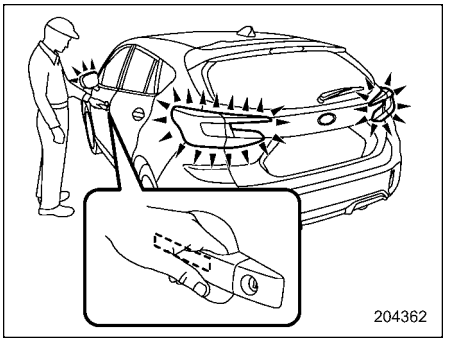

Carry the access key fob, and touch the sensor behind the door handle.

- When the driver's door handle is gripped, only the driver's door and the fuel filler lid will be unlocked.
- When the front passenger's door handle is gripped, all the doors (including the rear gate) and the fuel filler lid will be unlocked.

Also, an electronic chirp will sound twice and the hazard warning flashers will flash twice.

▽ **Opening rear gate**

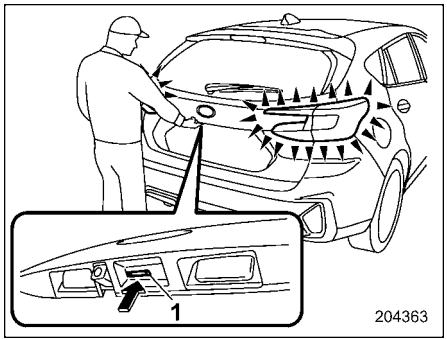

1 Rear gate opener button

Carry the access key fob, and press the rear gate opener button. Only the rear gate will be unlocked and opened. Also, an electronic chirp will sound twice and the hazard warning flashers will flash twice.

▼ **Door unlock selection function**

When the door is unlocked using the keyless access function, only the doors that were set and the fuel filler lid can be unlocked.

The settings can be changed with the following methods.

- The setting can be changed by operating the center information display. For details, refer to “Car settings” ☞P201 (11.6-inch display models) or “Vehicle setting icons” ☞P219 (dual 7.0-inch display models).
- The setting can be changed by a SUBARU dealer.

■ Unlock Using PIN Code Access

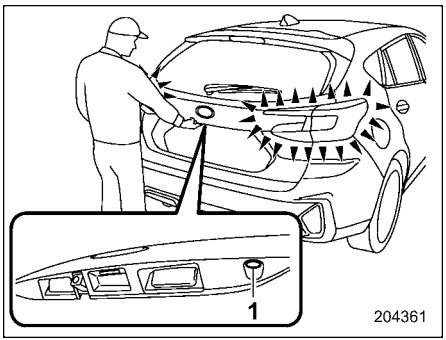

1 Rear lock button

While all the doors (including the rear gate and the fuel filler lid) are locked, you can unlock the doors without a key by operating the rear lock button.

NOTE

PIN Code Access will be helpful if the key is accidentally left in the vehicle. It is recommended that a 5-digit security code (PIN code) is registered.

– CONTINUED –

▼ Registration for a PIN code

Steps		Operation	Time from the previous step
1		Turn off the ignition switch.	—
2		Close all the doors (including the rear gate).	—
3		Press and hold the "🔒" button on the access key fob, then press and hold the rear lock button until a chirp sounds intermittently.	—
4		Press the "🔒" button on the access key fob.	Within 30 seconds
5		Input the PIN code using the rear lock button within 30 seconds after the chirp sound of step 4. For example, to register "32468" as the PIN code, perform the following procedure.	Within 30 seconds
	(1)	Press the button three times.	
	(2)	After a chirp sounds once, press the button twice.	
	(3)	After a chirp sounds once, press the button four times.	
	(4)	After a chirp sounds once, press the button six times.	
	(5)	After a chirp sounds once, press the button eight times.	
6		Perform step 5 again within approximately 30 seconds after the chirp starts sounding intermittently.	—
7		All doors will be unlocked and locked. Then the PIN code will be registered.	—

NOTE

Press the "🔒" button within 30 seconds of step 6 to end the preparation mode and move on to the registration stage. Unless the "🔒" button is pressed within 30 seconds after step 6, the PIN code registration will be canceled.

NOTE

- **Press the rear lock button ten times to enter “0”.**
- **Change the PIN code frequently to protect your vehicle from theft.**
- **If you have lent your vehicle to another person, confirm that the PIN code has not been changed or deleted. If the PIN code has been changed or deleted, reregister a new PIN code.**
- **If you make an error during the registration procedure, press the “🔒” or “🚗” button on the access key fob. Then start over from step 1.**
- **To protect your vehicle from theft, you cannot register “00000” to “99999” or “12345” as a PIN code.**
- **Do not register your vehicle license plate number or simple numbers such as “11122” or “12121” as a PIN code. Doing so will increase the risk of vehicle theft.**
- **When you try to register “22222”, the registered PIN code will be deleted. You cannot unlock the doors by PIN Code Access until a new code is registered.**
- **After registering a new PIN code, make sure that you can unlock the doors using the PIN code.**
- **The PIN code cannot be deleted while the keyless access function is disabled by operating the access key fob.**
- **Reregister the PIN code in the following case.**
  - **When you forget the PIN code**
  - **When you want to change the PIN code**

▼ Unlocking

Perform steps (1) to (5) of step 5 described in “Registration for a PIN code”.

NOTE

- **You cannot unlock by PIN Code Access in the following cases.**
  - **When the access key fob is within the operating ranges**
  - **When the ignition switch is in the “ACC” or “ON” position**
- **If you make an operation error during the unlocking procedure, start over with the unlocking procedure after waiting for 5 seconds or longer.**
- **To protect your vehicle from theft, a buzzer will sound if incorrect PIN codes are entered five times continuously. If this occurs, you cannot unlock the doors by PIN Code Access for 5 minutes.**

■ Power Saving Function

To protect the access key fob battery and the vehicle battery, the keyless access function will be disabled as follows.

- When the keyless access function and the remote keyless entry system have not been used:
  (1) 5 days after the push-button ignition switch has been turned off, communication between the antennas and the access key fob will be stopped.
  (2) 9 days after step (1), the sensors (both lock sensor and unlock sensor) on the front passenger’s door will be disabled.
- When the access key fob has been left in the operating range for 10 minutes or longer while all doors are locked, the keyless access function will be disabled.

▼ Recovery from power saving mode

When one of the following operations is performed, the keyless access function will be recovered.

- Unlock by gripping the door handle (only when the sensors on the front passenger’s door are not disabled) or pressing rear gate opener button on the rear gate.

– CONTINUED –

- Lock or unlock by the remote keyless entry system.
- Open a door and then close it.
- Turn the push-button ignition switch to the “ON” position.

■ Power Saving Function of Access Key Fob

This function stops the access key fob from receiving signals and helps minimize the battery consumption of the access key fob.

1. Press the “🔓” button twice while holding the “🔒” button.

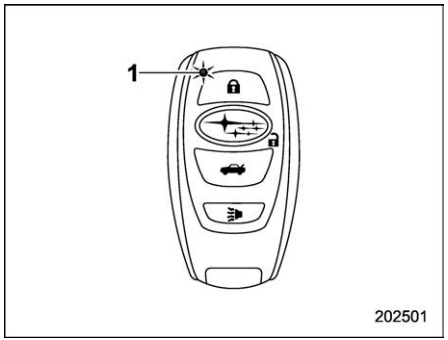

1 LED indicator

2. Confirm that the LED indicator blinks 4 times to notify that the setting is complete.

When the access key fob is in the power save mode, the keyless access function and push-button start system will not be available. To cancel the power save mode, press one of the buttons on the access key fob.

■ Disabling Keyless Access Function

⚠ WARNING

If you have an implanted pacemaker or an implanted defibrillator, perform the procedure “By operating the driver’s door” ☞P118 to disable the keyless access function. If you perform the procedure “By operating the access key fob” ☞P116, the operation of an implanted pacemaker or implanted defibrillator may be affected by the radio waves from the transmitting antennas installed on the vehicle.

When the vehicle is not going to be used for a long time, or when you choose not to use the keyless access function, the keyless access function can be disabled.

NOTE

- **If the access key is kept in or comes near the vehicle, the system becomes active and both the vehicle and access key batteries’ energy will be consumed. If this occurs frequently or continuously, both the vehicle and access key batteries can become fully drained.**
- **The locking and unlocking function by the remote keyless entry system is not disabled.**
- **To start the engine while the functions are disabled, perform the procedure described in “Starting Engine” ☞P427.**

▼ Disabling functions

▽ By operating the access key fob

To disable the keyless access function by operating the access key fob, register a PIN code for PIN Code Access. For details about registering a PIN code, refer to “Unlock Using PIN Code Access” ☞P113.

1. Open the driver's door.

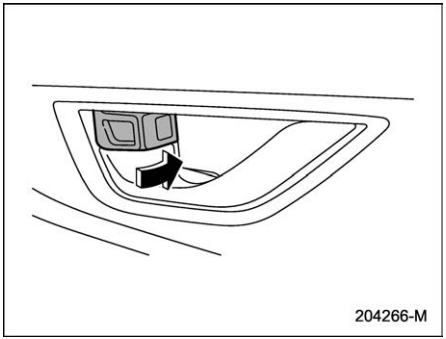

2. Rotate the lock lever forward.

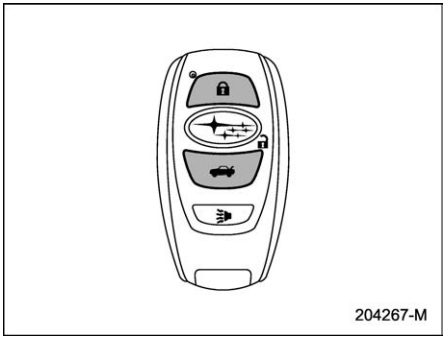

3. Press and hold the "🔓" button and "🚗" button on the access key fob simultaneously for more than 5 seconds.

A chirp sound will be heard, and the function will be disabled.

– CONTINUED –

▽ By operating the driver's door

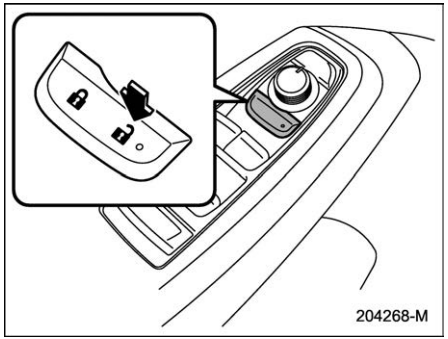

To disable the keyless access function by operating the driver's door, perform the following procedures.

Steps	Operation	Time	Status
1	Sit in the driver's seat, and close the door.	—	Close
2	Push "🔒" on the power door locking switch.	—	Close
3	Open the driver's door.	Within 5 sec.	Close→Open
4	Push "🔒" on the power door locking switch twice.	Within 5 sec.	Open
5	Close and open the driver's door twice.	Within 10 sec.	Open→Close→ Open→Close→Open
6	Push "🔒" on the power door locking switch twice while the door is open.	Within 10 sec.	Open
7	Close and open the driver's door once.	Within 10 sec.	Open→Close→Open
8	Close the door.	Within 5 sec.	Open→Close

A chirp will sound and the functions will be disabled.

NOTE

In steps 4 and 6, press the power door locking switch firmly. If the switch is not pressed firmly, the functions may not be disabled.

▼ **Enabling functions**

When the procedure to disable the functions is performed again, a chirp sound will be heard, and the functions are enabled.

NOTE

- **The keyless access function will be enabled only if you perform the procedure in the same manner you disabled the function (for example, when disabling by operating the driver's door, the function will not be enabled even if you operate the access key fob).**
- **Press the push-button ignition switch if you do not know the procedure in which the keyless access function was disabled.**
  - **When disabling by operating the driver's door: A chirp will not be heard.**
  - **When disabling by operating the access key fob: A chirp will be heard.**

■ Selecting Audible Signal Operation

Using an electronic chirp, the system will give you an audible signal when the doors are locked or unlocked. If desired, you can turn the audible signal off by operating the center information display. For details, refer to "Car settings" ☞P201 (11.6-inch display models) or "Vehicle setting icons" ☞P219 (dual 7.0-inch display models).

Furthermore, the volume setting of the audible signal can also be changed by a SUBARU dealer. Consult your SUBARU dealer for details.

■ Selecting Hazard Warning Flasher Operation

Using the hazard warning flasher, the system will give you a visible signal when the doors are locked or unlocked. If desired, you can turn the hazard warning flashers off by operating the center information display. For details, refer to "Car settings" ☞P201. The setting can also be changed by a SUBARU dealer. Consult your SUBARU dealer for details.

■ Warning Chimes and Warning Indicator

The keyless access with push-button start system is equipped with a warning chime and the access key warning indicator in order to minimize improper operations and help protect your vehicle from theft.

For details, refer to "Warning Chimes and Warning Indicator of the Keyless Access with Push-Button Start System" ☞P168.

■ When Access Key Fob Does Not Operate Properly

Refer to "Access Key Fob – If Access Key Fob Does Not Operate Properly" ☞P426.

■ Replacing Battery of Access Key Fob

Refer to "Replacing Battery of Access Key Fob" ☞P486.

■ Replacing Access Key Fob

Access key fobs can be replaced at SUBARU dealers. For more details, contact a SUBARU dealer.

■ Certification for Keyless Access with Push-Button Start System

- **U.S.-spec. models**

FCC ID: HYQ14AKB
FCC ID: Y8PSU19S-3
FCC ID: Y8PSSPIMB02

⚠ CAUTION

FCC WARNING

Changes or modifications not expressly approved by the party responsible for compliance could void

– CONTINUED –

the user's authority to operate the equipment.

This device complies with part 15 of the FCC Rules. Operation is subject to the following two conditions: (1) This device may not cause harmful interference, and (2) this device must accept any interference received, including interference that may cause undesired operation.

- **Canada-spec. models**
  - **Type 1**

NOTE

This device complies with Industry Canada's licence-exempt RSSs. Operation is subject to the following two conditions: (1) This device may not cause interference; and (2) This device must accept any interference, including interference that may cause undesired operation of the device.

REMARQUE

Le présent appareil est conforme aux CNR d'Industrie Canada applicables aux appareils radio exempts de licence. L'exploitation est autorisée aux deux conditions suivantes: (1) l'appareil ne doit pas produire de brouillage; (2) l'utilisateur de l'appareil doit accepter tout brouillage radioélectrique subi, même si le brouillage est susceptible d'en compromettre le fonctionnement.

203226

  - **Type 2**

NOTE

This device contains licence-exempt transmitter(s)/receiver(s) that comply with Innovation, Science and Economic Development Canada's licence-exempt RSS(s). Operation is subject to the following two conditions:

(1) This device may not cause interference.

(2) This device must accept any interference, including interference that may cause undesired operation of the device.

REMARQUE

L'émetteur/récepteur exempt de licence contenu dans le présent appareil est conforme aux CNR d'Innovation, Sciences et Développement économique Canada applicables aux appareils radio exempts de licence. L'exploitation est autorisée aux deux conditions suivantes :

1) L'appareil ne doit pas produire de brouillage;

2) L'appareil doit accepter tout brouillage radioélectrique subi, même si le brouillage est susceptible d'en compromettre le fonctionnement.

203833

2-3. Immobilizer

The immobilizer system is designed to prevent an unauthorized person from starting the engine. Only keys registered with your vehicle's immobilizer system can be used to operate your vehicle. If engine start is attempted with an unregistered access key fob or key, the engine will not start. Even if the engine does start, it will stop after a few seconds. This system, however, is not a 100% anti-theft guarantee.

CAUTION

- **Do not place the key under direct sunlight or anywhere it may become hot.**
- **Do not get the key wet. If the key gets wet, wipe it dry with a cloth immediately.**
- **Do not modify or remove the system. If modified or removed, the proper operation of the system cannot be guaranteed.**

NOTE

- **To protect your vehicle from theft, please pay close attention to the following security precautions:**
  - **Never leave your vehicle unattended with its keys inside.**
  - **Before leaving your vehicle, close all windows and the moonroof, and lock all the doors (including the rear gate and the fuel filler lid).**
  - **Do not leave spare keys or any record of your key number in the vehicle.**
- **The vehicle has a maintenance-free type immobilizer system.**

■ Security Indicator Light

Refer to "Security Indicator Light" ☞P173.

■ Key Replacement

Your key number plate will be required if you ever need a replacement key made. Any new key must be registered for use with your vehicle's immobilizer system before it can be used. The maximum number of keys that can be registered for use with one vehicle is as follows.

- Four (models without "keyless access with push-button start system")
- Seven (models with "keyless access with push-button start system")

One key that has already been registered is required in order to register a new key.

NOTE

If you lose a key, the lost key's ID code still remains in the memory of the vehicle's immobilizer system. For security reasons, the lost key's ID code should be erased from the memory. To erase the lost key's ID code, all keys that will be used are required.

For details about new key registration and erasing the lost key's ID code, contact your SUBARU dealer.

■ Certification for Immobilizer System

- **For models with "keyless access with push-button start system":**

Refer to "Certification for Keyless Access with Push-Button Start System" ☞P119.

– CONTINUED –

- **For models without "keyless access with push-button start system":**
  - **U.S.-spec. models**

FCC ID: Y8PSU22R-1

NOTE

This device complies with part 15 of the FCC Rules. Operation is subject to the following two conditions: (1) This device may not cause harmful interference, and (2) this device must accept any interference received, including interference that may cause undesired operation.

FCC WARNING

Changes or modifications not expressly approved by the party responsible for compliance could void the user's authority to operate the equipment.

204568

  - **Canada-spec. models**

NOTE

This device complies with Industry Canada's licence-exempt RSSs. Operation is subject to the following two conditions: (1) This device may not cause interference; and (2) This device must accept any interference, including interference that may cause undesired operation of the device.

REMARQUE

Le présent appareil est conforme aux CNR d'Industrie Canada applicables aux appareils radio exempts de licence. L'exploitation est autorisée aux deux conditions suivantes: (1) l'appareil ne doit pas produire de brouillage; (2) l'utilisateur de l'appareil doit accepter tout brouillage radioélectrique subi, même si le brouillage est susceptible d'en compromettre le fonctionnement.

203226

2-4. Remote Keyless Entry System

CAUTION

- **Do not expose the remote transmitter to severe shocks, such as those experienced as a result of dropping or throwing.**
- **Do not take the remote transmitter apart except when replacing the battery.**
- **Do not get the remote transmitter wet. If it gets wet, wipe it dry with a cloth immediately.**
- **When you carry the remote transmitter on an airplane, do not press the button of the remote transmitter while in the airplane. When any button of the remote transmitter is pressed, radio waves are sent and may affect the operation of the airplane. When you carry the remote transmitter in a bag on an airplane, take measures to prevent the buttons of the remote transmitter from being pressed.**

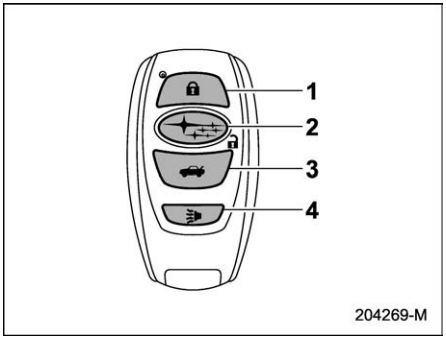

Access key fob
1 Lock/arm button
2 Unlock/disarm button
3 Rear gate unlock button
4 PANIC button

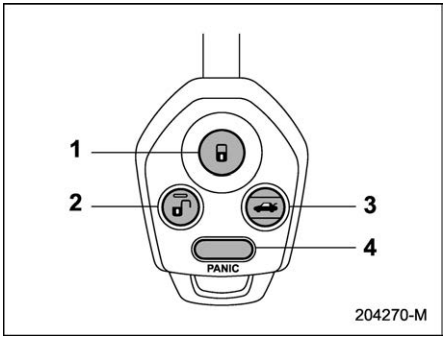

Transmitter
1 Lock/arm button
2 Unlock/disarm button
3 Rear gate unlock button
4 PANIC button

The remote keyless entry system has the following functions.

- Locking and unlocking all the doors (including the rear gate and the fuel filler lid)
- Unlock the rear gate
- Sounding a panic alarm
- Arming and disarming. For details, refer to “Alarm System” ☞P131.

The operable distance of the remote keyless entry system is approximately 30 feet (10 meters). However, this distance will vary depending on environmental conditions. The system’s operable distance will be shorter in areas near a facility or electronic equipment emitting strong radio waves such as a power plant, broadcast station, TV tower, or remote controller of home electronic appliances.

NOTE

- **For models with “keyless access with push-button start system”, the remote keyless entry system will not be activated when the push-button ignition switch is in any position other than the “OFF” position.**
- **For models without “keyless access with push-button start system”, the remote keyless entry system will not be activated when the key is inserted in the ignition switch.**
- **The hazard warning flashers will flash once or twice when the access key fob/transmitter button is pressed in the following cases.**
  - **When locking the doors**
  - **When unlocking the doors**
  - **When unlocking the rear gate**

– CONTINUED –

If desired, you can turn the hazard warning flashers off by operating the center information display. For details, refer to "Car settings" ☞P201 (11.6-inch display models) or "Vehicle setting icons" ☞P219 (dual 7.0-inch display models). The setting can also be changed by a SUBARU dealer. Consult your SUBARU dealer for details.

■ Locking the Doors

Press the "🔒" button to lock all the doors (including the rear gate and the fuel filler lid). An electronic chirp will sound once and the hazard warning flashers will flash once.

If any of the doors (including the fuel filler lid) is not fully closed, the following will occur to alert you that the doors are not properly closed.

- An electronic chirp sounds five times.
- The hazard warning flashers flash five times.

When you close the door, it will automatically lock and then the following will occur.

- An electronic chirp sounds once.
- The hazard warning flashers flash once.

■ Unlocking the Doors

Press the "🔓" button to unlock the driver's door and fuel filler lid. An electronic chirp will sound twice and the hazard warning flashers will flash twice. To unlock all the doors and the rear gate, briefly press the "🔓" button again within 5 seconds.

NOTE

If the interval between the first and second presses of the "🔓" button for unlocking all the doors is extremely short, the system may not respond.

■ Opening the Rear Gate

Press the "🚗" button to unlock the rear gate. An electronic chirp will sound twice and the hazard warning flashers will flash twice.

This operation setting can be changed by a SUBARU dealer. Consult your SUBARU dealer for details.

■ Setting Audible Signal Operation

Using an electronic chirp, the system will give you an audible signal when the doors lock and unlock.

Models with "keyless access with push-button start system":

If desired, you can turn the audible signal off by operating the center information display. For details, refer to "Car settings" ☞P201 (11.6-inch display models) or "Vehicle setting icons" ☞P219 (dual 7.0-inch display models). Furthermore, the volume setting of the audible signal can also be changed by a SUBARU dealer. Consult your SUBARU dealer for details.

Models without "keyless access with push-button start system":

Perform the following steps to deactivate the audible signal. Take the same steps to restore the function.

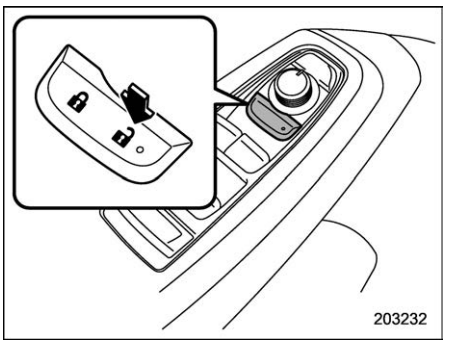

Steps		Operation	Time
1		Sit in the driver's seat.	—
2		Close all doors.	—
3	(1)	Press and hold "🔓" on the power locking switch.	Within 10 sec.
	(2)	Insert the key into the ignition switch and pull it out at least 6 times.	
4		Open and close the driver's door.	Within 10 sec.

The hazard warning flashers flash 3 times to indicate completion of the setting.

Your SUBARU dealer can perform the above procedure for you.

■ Selecting Hazard Warning Flasher Operation

Using the hazard warning flasher, the system will give you a visible signal when the doors are locked or unlocked. If desired, you can turn the hazard warning flashers off by operating the center information display. For details, refer to "Car settings" ☞P201 (11.6-inch display models) or "Vehicle setting icons" ☞P219 (dual 7.0-inch display models). The setting can also be changed by a SUBARU dealer. Consult your SUBARU dealer for details.

■ Vehicle Finder Function

Use this function to find your vehicle parked among many vehicles in a large parking lot. Provided you are within 30 feet (10 meters) of the vehicle, pressing the "🔒" button three times in a 5-second period will cause your vehicle's horn to sound once and its hazard warning flashers to flash three times.

NOTE

If the interval between presses is too short when you press the "🔒" button three times, the system may not respond to the signals from the remote transmitter.

■ Sounding a Panic Alarm

To activate the alarm, press the "PANIC" button once.

The horn will sound and the hazard warning flashers will flash.

To deactivate the panic alarm, press any button on the remote transmitter. If a button on the remote transmitter is not pressed, the alarm will be deactivated after approximately 30 seconds.

■ Replacing the Battery

Refer to "Replacing Battery" ☞P485.

■ Replacing Lost Transmitters

If you lose a transmitter or want to purchase additional transmitters (up to four or seven can be programmed), you should re-program all your transmitters for security reasons. The maximum number of transmitters that can be registered for use with one vehicle is as follows.

- Four (models without "keyless access with push-button start system")
- Seven (models with "keyless access with push-button start system")

For details, contact your SUBARU dealer and have the transmitters programmed into the remote keyless entry system.

■ Certification for Remote Keyless Entry System

- **U.S.-spec. models**

FCC ID: CWTB1G496

FCC ID: CWTD1G141

⚠ CAUTION

FCC CAUTION

Changes or modifications not expressly approved by the party responsible for compliance could void the user's authority to operate the equipment.

– CONTINUED –

This device complies with part 15 of the FCC Rules. Operation is subject to the following two conditions: (1) This device may not cause harmful interference, and (2) this device must accept any interference received, including interference that may cause undesired operation.

- **Canada-spec. models**
  - **Type 1**

NOTE

This device complies with Industry Canada's licence-exempt RSSs. Operation is subject to the following two conditions: (1) This device may not cause interference; and (2) This device must accept any interference, including interference that may cause undesired operation of the device.

REMARQUE

Le présent appareil est conforme aux CNR d'Industrie Canada applicables aux appareils radio exempts de licence. L'exploitation est autorisée aux deux conditions suivantes: (1) l'appareil ne doit pas produire de brouillage; (2) l'utilisateur de l'appareil doit accepter tout brouillage radioélectrique subi, même si le brouillage est susceptible d'en compromettre le fonctionnement.

203226

  - **Type 2**

NOTE

This device contains licence-exempt transmitter(s)/receiver(s) that comply with Innovation, Science and Economic Development Canada's licence-exempt RSS(s). Operation is subject to the following two conditions:

(1) This device may not cause interference.

(2) This device must accept any interference, including interference that may cause undesired operation of the device.

REMARQUE

L'émetteur/récepteur exempt de licence contenu dans le présent appareil est conforme aux CNR d'Innovation, Sciences et Développement économique Canada applicables aux appareils radio exempts de licence. L'exploitation est autorisée aux deux conditions suivantes :

1) L'appareil ne doit pas produire de brouillage;

2) L'appareil doit accepter tout brouillage radioélectrique subi, même si le brouillage est susceptible d'en compromettre le fonctionnement.

203833

2-5. Door Locks

■ Locking and Unlocking from the Outside

NOTE

If you unlock the driver's door with a key (including an emergency key) and open the door while the alarm system is armed, the alarm system is triggered and the vehicle's horn sounds. In this case, perform any of the following operations:

Models with "keyless access with push-button start system":

- **Press any button on the access key fob (except when the access key fob battery is discharged).**
- **Turn the push-button ignition switch to the "ACC" position.**
- **Carry the access key fob and perform either of the following procedures.**
  - **Grip the front door handle.**
  - **Press the rear gate opener button.**

Models without "keyless access with push-button start system":

- **Press any button on the remote transmitter (except when the transmitter battery is discharged).**
- **Insert the key into the ignition switch and turn the ignition switch to the "ON" position.**

For details about the alarm system, refer to "Alarm System" ☞P131.

▼ How to lock and unlock the vehicle using the key

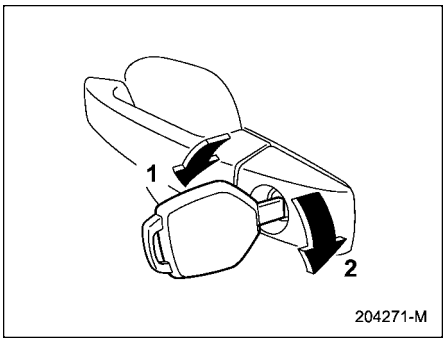

1 Rotate the key toward the front to lock.
2 Rotate the key toward the rear to unlock.

In this case, only the driver's side door is locked or unlocked.

NOTE

Models with "keyless access with push-button start system":

The emergency key is directional. If the key cannot be inserted, change the direction that the grooved side is facing and insert it again.

▼ How to lock the vehicle without using the key

To lock the door from outside without the key, the following methods are available.

▽ Locking using lock lever

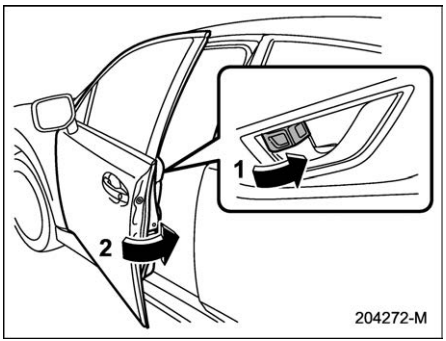

1 Rotate the lock lever forward.
2 Close the door.

In this way, only the door that was operated will be locked.

– CONTINUED –

▽ **Locking using power door locking switch**

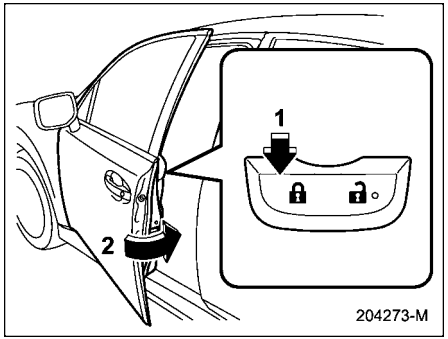

1 Press the 🔒 side of the power door locking switch.*
2 Close the door.

*: For details about the power door locking switch, refer to "How to operate the power door locking switches" ☞P129.

In this case, all the closed doors, the fuel filler lid and the rear gate are locked at the same time.

NOTE

Make sure that you do not leave the key inside the vehicle before locking the doors from the outside without the key.

■ Locking and Unlocking from the Inside

▼ **How to use the lock lever**

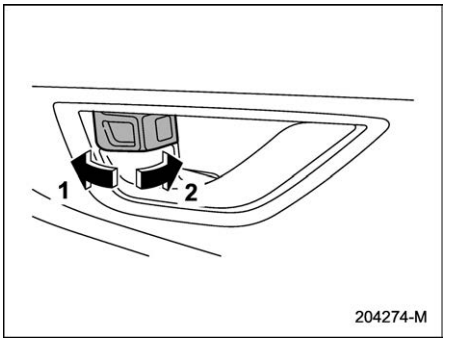

1 Rotate the lock lever rearward to unlock.
2 Rotate the lock lever forward to lock.

To lock the door from the inside, rotate the lock lever forward. To unlock the door from the inside, rotate the lock lever rearward.

The red mark on the lock lever appears when the door is unlocked.

Pull the inside door handle to open an unlocked door.

Always make sure that all the doors and the rear gate are closed before starting to drive.

⚠ WARNING

- **Keep all doors locked when you drive, especially when small children are in your vehicle.**

  Along with the proper use of seatbelts and child restraint systems, locking the doors reduces the chance of being thrown out of the vehicle in an accident.

  It also helps prevent passengers from falling out by preventing a door from being accidentally opened, and intruders from unexpectedly opening doors and entering your vehicle.
- **Do not pull the front door handle from inside while driving. The door could open even if it is locked.**

⚠ CAUTION

Do not pull the front inside door handle while operating the door lock. There is a risk that it will not be possible to open or lock the front doors.

▼ How to operate the power door locking switches

All the doors (including the rear gate and the fuel filler lid) can be locked and unlocked by pressing either side of the power door locking switches located on the driver's side and the front passenger's side doors.

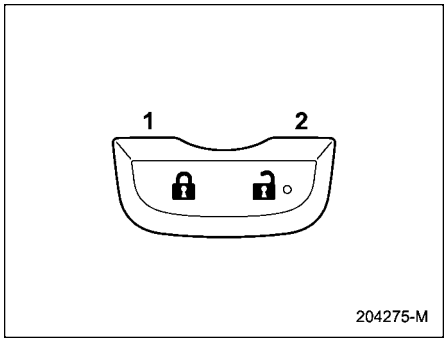

1 Lock
2 Unlock

NOTE

Make sure that you do not leave the key inside the vehicle before locking the doors from the outside using the power door locking switches.

■ Automatic Door Locking/Unlocking

All the doors (including the fuel filler lid) are automatically locked or unlocked under the following conditions.

- For automatic door locking
  - When the vehicle speed reaches 12 mph (20 km/h) or higher (factory default setting).
  - When the select lever is shifted into a position other than the "P" position.
- For automatic door unlocking
  - When the driver's door is open (factory default setting).
  - When the ignition switch is turned to OFF.
  - When the select lever is shifted into the "P" position.

NOTE

- **The automatic door lock and unlock setting can be changed with the center information display. Refer to "Car settings" ☞P201 (11.6-inch display models) or "Vehicle setting icons" ☞P219 (dual 7.0-inch display models).**
- **When locking the door by the power door locking switches, automatic door locking will not operate.**
- **When unlocking the door by the power door locking switches, automatic door unlocking will not operate.**
- **If the system detects a strong enough impact to deploy the airbags, all doors may be automatically unlocked. For further details, refer to "Automatic Door Locking/Unlocking Operation When Involved in an Accident" ☞P430.**
- **When getting out of the vehicle from a rear door, make sure to unlock all the doors by pushing the unlock side of the power door locking switch. If a rear door is unlocked from the inside door lever then the door is opened and closed, the Key lock-in prevention function will be triggered. All doors will be unlocked, the Key lock-in prevention warning indicator "" will appear and the warning chime will also sound.**

■ Key Lock-In Prevention Function

Under the following conditions, all the doors will not lock when the power door locking switch is pushed with the driver's door open.

- The key is still in the ignition switch (models without "keyless access with

– CONTINUED –

push-button start system”).

- The ignition switch is in the “ACC” or “ON” position (models with “keyless access with push-button start system”).

NOTE

- **When leaving the vehicle, make sure you are holding the key before locking the doors.**
- **When getting out of the vehicle from a rear door, make sure to unlock all the doors by pushing the unlock side of the power door locking switch.**
- **When getting out of the vehicle from a rear door, make sure to unlock all the doors by pushing the unlock side of the power door locking switch. If a rear door is unlocked from the inside door lever then the door is opened and closed, the Key lock-in prevention function will be triggered. All doors will be unlocked, the Key lock-in prevention warning indicator “ ” will appear and the warning chime will also sound.**
- **The factory setting (default setting) for this function is set as “operational”. This function’s operational/non-operational setting can be changed by a SUBARU dealer. Contact a SUBARU dealer for details.**

▼ Non-operation of key lock-in prevention function

When the system is set so that it does not operate, the doors are locked by the following operation.

- If the lock lever is turned to the front (“LOCK”) position with the driver’s door open and the driver’s door is then closed with the lock lever in that position, the driver’s door is locked.
- If the emergency key is used to lock the driver’s door from the outside of the vehicle, the door is locked.

■ Battery Drainage Reduction Function

Under various conditions, lights inside the vehicle will automatically turn off to reduce the risk of discharging the battery.

▼ Battery drainage reduction function for various conditions

This function will enter standby mode under the following conditions:

- The ignition switch is turned to the “OFF” position (models with “keyless access with push-button start system”).
- The key is removed from the ignition key cylinder (models without “keyless access with push-button start system”).

If the following actions are not performed within 10 minutes, while the function is in standby mode, any room lights that are on will automatically turn off.

Turning off lights	– Map light – Dome light – Ignition switch light*1 – Cargo area light – Vanity mirror light*3
Actions	– Turn the ignition switch to the “ACC” or “ON” position. – Open or close the doors, including the rear gate. – Push the unlock button on the access key fob or transmitter. – Hold the front door handle and unlock it while holding the access key fob.*1 – Insert the key into the keyhole of the ignition switch.*2 – Come close to the vehicle that the front door was locked while holding the access key fob (if OFF delay timer setting for period of time is not off).*1 – Push the panic button on the access key fob or transmitter.

*1: Models with “keyless access with push-button start system”
*2: Models without “keyless access with push-button start system”
*3: If equipped

Perform the action in the above table to illuminate the lights again when the battery drainage reduction function is active.

NOTE

- **The battery drainage reduction function cannot be turned off.**
- **If the battery drainage reduction function is in operation when a door is open, the target room light will not be illuminated.**
- **To protect the battery from battery drainage, make sure that all doors, including the rear gate, are completely closed when leaving the vehicle.**

2-6. Alarm System

The alarm system helps to protect your vehicle and valuables from theft. The horn sounds and the hazard warning flashers flash if someone attempts to break into your vehicle.

For models with "keyless access with push-button start system":

The system can be armed or disarmed with the keyless access function or access key fob.

The system will not be activated when the push-button ignition switch is in the "ACC" or "ON" position.

For models without "keyless access with push-button start system":

The system can be armed or disarmed with the remote transmitter.

The system will not be activated when the key is inserted into the ignition switch.

Your vehicle's alarm system has been set for activation at the time of shipment from the factory. You can set the system for deactivation yourself or have it done by your SUBARU dealer.

■ Alarm System Operation

When the alarm system is armed, it is triggered by the opening any of the doors, the rear gate or engine hood.

The alarm system will activate the following alarms when triggered.

- The vehicle's horn will sound for 30 seconds.
- The hazard warning flashers will flash for 30 seconds.

If any of the doors, the rear gate or engine hood remains open after the 30-second period, the horn will continue to sound for a maximum of 3 minutes. If the door, rear gate or engine hood is closed while the horn is sounding, the horn will stop sounding with a delay of up to 30 seconds.

NOTE

The alarm system can be set to trigger the illumination of the following interior lights.

- **Map lights (illuminates only when the door interlock switch is in the "DOOR" position)**
- **Dome light (illuminates only when the dome light switch is in the "DOOR" position)**

The notifications regarding the map lights and dome light are deactivated

– CONTINUED –

as the factory setting. A SUBARU dealer can activate the system. Contact your SUBARU dealer for details.

■ Arming the System

The alarm system becomes armed when the following operation is performed.

1. Close all windows and the moonroof (if equipped) and turn the ignition switch to the “OFF” position.
2. Carry the key and get out of the vehicle.
3. Make sure that the engine hood is locked.
4. Lock the doors using any of the following methods.
   - Locking using the remote keyless entry system. For details, refer to “Remote Keyless Entry System” ☞P122.
   - Locking using the keyless access function (if equipped). For details, refer to “Locking with the door lock sensor” ☞P112.
   - Locking using the power door locking switch. For details, refer to “Locking using power door locking switch” ☞P128.

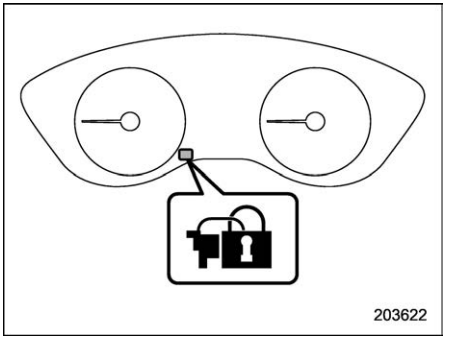

Security indicator light

NOTE

- **All doors, the rear gate and fuel filler lid will lock, an electronic chirp will sound once, the hazard warning flashers will flash once, and the security indicator light will start flashing rapidly.**
- **If any of the doors or the rear gate is not fully closed, an electronic chirp sounds five times and the hazard warning flashers flash five times to alert you that the doors (or the rear gate) are not properly closed. When you close the door, doors will automatically lock and the system will automatically arm in 30 seconds.**

5. Approximately 30 seconds later, the system will enter surveillance state.

When the system is in surveillance state, the security indicator light will then flash slowly (twice approximately every 2 seconds), indicating that the system has been armed for surveillance.

NOTE

- **The system can be armed even if the windows and/or moonroof are open. Always make sure that they are fully closed before arming the system.**
- **The 30-second standby time can be eliminated if you prefer. Have it performed by your SUBARU dealer.**
- **If any of the following actions is done during the standby period, the system will not switch to the surveillance state.**
  - **Doors (including the rear gate) are unlocked using the access key fob/remote transmitter.**
  - **Doors (including the rear gate) are unlocked using the keyless access function (models with “keyless access with push-button start system”).**
  - **Any door (including the engine hood) is opened.**
  - **The ignition switch is turned to the “ON” position (models with-**

out "keyless access with push-button start system").
- **Push-button ignition switch is turned to the "ACC" position (models with "keyless access with push-button start system").**

■ Disarming the System

Perform either of the following procedures.

- Briefly press an unlock button (for less than 2 seconds) on the access key fob/remote transmitter.
- Carry the access key fob and perform either of the following procedures (models with "keyless access with push-button start system").
  - Grip the front door handle.
  - Press the rear gate opener button.
  - Unlock using the PIN code access.

The flashing of the security indicator light will then change slowly (once approximately every 3 seconds from twice approximately every 2 seconds), indicating that the alarm system has been disarmed.

▼ Emergency disarming

If you cannot disarm the system using the access key fob/transmitter (i.e., the transmitter is lost, broken or the transmitter battery is too weak), you can disarm the system without using the access key fob/remote transmitter.

The system can be disarmed if you turn the ignition switch from the "LOCK"/"OFF" position to the "ON" position with a registered key/access key fob.

NOTE

For models with "keyless access with push-button start system", if the access key fob battery is discharged, perform the procedure described in "Switching Power Status" ☞P426. In such a case, replace the battery immediately. Refer to "Replacing Battery of Access Key Fob" ☞P486.

■ Alarm System Setting

To change the setting of your vehicle's alarm system for activation or deactivation, do the following.

1. Disarm the alarm system. Refer to "Disarming the System" ☞P133.
2. Sit in the driver's seat and shut all doors, the rear gate and engine hood.
3. Turn the ignition switch to the "ON" position.
4. Hold down "🔒" of the driver's power door locking switch, open the driver's door within the following 1 second, and wait 10 seconds without releasing the switch. The setting will then be changed as follows.

Setting status	Combination meter display (color LCD)	Horn
Activate	AL ON	Once
Deactivate	AL OFF	Twice

NOTE

You may have the above setting change done by your SUBARU dealer.

■ If You Have Accidentally Triggered the Alarm System

▼ To stop the alarm

Do any of the following operations:

- Press any button on the access key fob/remote transmitter.
- Turn the ignition switch to the "ON" position (models without "keyless access with push-button start system").
- Turn the push-button ignition to the "ACC" position (models with "keyless access with push-button start system").

NOTE

Only registered keys will stop the alarm. If the immobilizer transponder is not registered, the alarm will not stop.

– CONTINUED –

■ Valet Mode

When you choose the valet mode, the alarm system does not operate. In valet mode, the remote transmitter is used only for locking and unlocking the doors and panic activation.

To enter the valet mode, change the setting of your vehicle's alarm system to deactivation mode. Refer to "Alarm System Setting" ☞P133. The security indicator light will continue to flash once every 3 seconds, indicating that the system is in the valet mode.

To exit valet mode, change the setting of your vehicle's alarm system to activation mode. Refer to "Alarm System Setting" ☞P133.

2-7. Child Safety Locks

⚠ WARNING

Always turn the child safety locks to the "LOCK" position when children sit on the rear seat. Serious injury could result if a child accidentally opens the door and falls out.

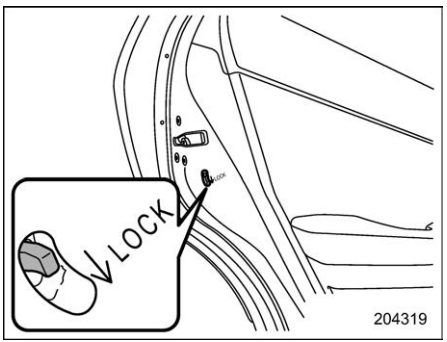

Each rear door has a child safety lock. When the child safety lock lever is in the "LOCK" position, the door cannot be opened from inside. The door can only be opened from the outside.

2-8. Windows

⚠ WARNING

To avoid serious personal injury caused by entrapment, always conform to the following instructions without exception.

- **When operating the power windows, be extremely careful to prevent anyone's body parts or any other objects from being caught in the window.**
- **Always lock the passengers' windows using the lock switch when children are riding in the vehicle.**
- **Always carry the key when you leave the vehicle for safety reasons and never allow an unattended child to remain in the vehicle. Failure to follow this procedure could result in injury to a child operating the power window.**

NOTE

- **If the power window system detects resistance, an impact or abnormality, the window operation may be automatically stopped to prevent**

further jamming, entrapment or malfunction.
- **The closing window slides down slightly and stops.**
- **The opening window stops sliding down.**

- **The power window system may detect resistance, an impact or an abnormality in the following cases.**
  - **A substantial sized object is caught between the window and the window frame.**
  - **A foreign object is caught between the window and the window frame.**
  - **The vehicle drives over a deep pothole.**
- **The window cannot be closed for a few seconds after the window is automatically stopped by the system.**

■ Power Window Operation

▼ Power window switches

- Driver's side power window switches:

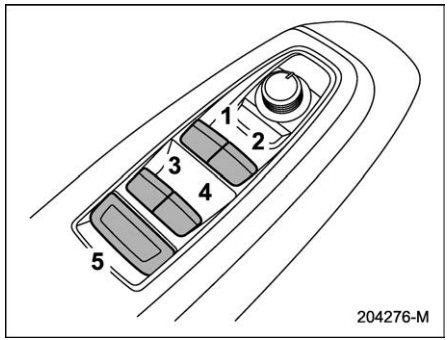

1 For front left window*
2 For front right window*
3 For rear left window
4 For rear right window
5 Lock switch
*: With one-touch auto up and down feature

All door windows can be controlled by the power window switch cluster on the driver side door.

The power windows operate when the power window switch illuminates or the ignition switch is in the "ON" position.

- Passenger's side power window switches:

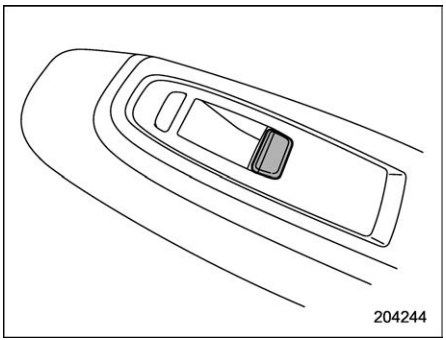

Each passenger's window can be controlled by the power window switch located on the door.

- Front passenger's window

The power window operates when the power window switch illuminates or the ignition switch is in the "ON" position.

- Rear passenger's windows

The power windows operate only when the ignition switch is in the "ON" position.

– CONTINUED –

▼ Operating the window

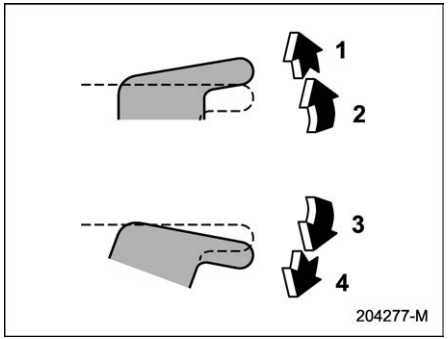

With one-touch auto up and down feature

1 Automatically close*
2 Close
3 Open
4 Automatically open*

*: To stop the window halfway, operate the switch to the opposite side.

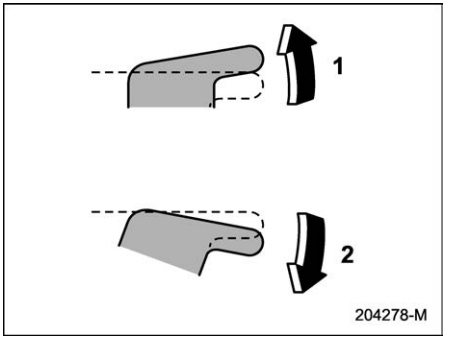

Without one-touch auto up and down feature

1 Close
2 Open

NOTE

Avoid the following.

- **Continuously operating a switch in the same direction after the window is fully closed or fully opened.**
- **Continuously operating three or more switches all at once in the same direction after the windows are fully closed or fully opened.**

Either of the operations described above may cause the power window breaker to operate making it impossible to open or close the window. Be sure to initialize the power windows. Refer to "Initialization of Power Window (Windows with One-Touch Auto Up and Down Function)" ☞P137.

▼ Anti-entrapment function (windows with one-touch auto up and down function)

While closing the window automatically, if the window senses a substantial enough object trapped between the window and the window frame, it automatically moves down slightly and stops.

If a foreign object is caught while window is opening automatically, the window will stop.

⚠ CAUTION

- **Never attempt to test the power window operation using body parts.**
- **If an object is caught just before the window fully closes, the system may not operate properly.**

NOTE

- **If a window detects an impact similar to that caused by trapping an object (for example, when the vehicle encounters a deep pothole), the anti-entrapment function may operate.**

- **You cannot close the window for a few seconds after the anti-entrapment function operates.**

▼ **Off delay function (windows with one-touch auto up and down function)**

The windows can be operated for approximately 40 seconds even after the ignition switch is turned to the “ACC” or “OFF” position. If a front door is opened within 40 seconds, the off delay function is canceled.

▼ **Locking the passengers’ windows**

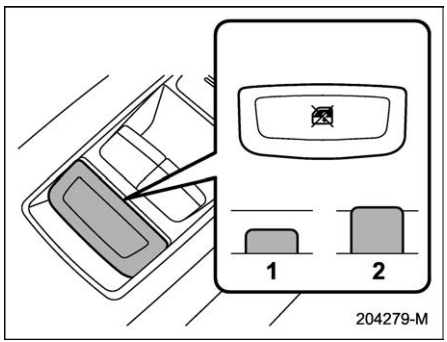

1 Lock
2 Unlock

When the lock switch is in the lock position, the rear passenger’s window switches on the driver side door and the passengers’ window switches cannot be operated.

When the indicator on the window switches does not illuminate, the window switch cannot be operated.

■ Initialization of Power Window (Windows with One-Touch Auto Up and Down Function)

If the one-touch auto up and down function or off delay function does not operate properly, operate each window according to the following procedure in order to initialize the power window system.

1. Close the door.
2. Turn the ignition switch to the “ON” position.
3. Open the window completely and then press and hold down the power window switch for approximately 1 second.
4. Close the window completely and then pull and hold the power window switch for approximately 1 second.

2-9. Rear Gate

⚠ CAUTION

When loading and unloading cargo, be careful not to come in contact with the hot engine exhaust gas or the exhaust pipe, because they could burn you.

NOTE

Avoid keeping the rear gate open for more than a few hours. Doing so may drain the vehicle battery.

The rear gate can be locked and unlocked using any of the following systems.

- Power door locking switch: Refer to “Locking and Unlocking from the Inside” ☞P128.
- Keyless access with the push-button start system: Refer to “Keyless Access with Push-Button Start System” ☞P106.
- Remote keyless entry system: Refer to “Remote Keyless Entry System” ☞P122.
- Locking and unlocking from the outside with the emergency key (models with double locking system): Refer to “Locking and Unlocking from the Outside”

– CONTINUED –

☞P127.

Opening the rear gate:

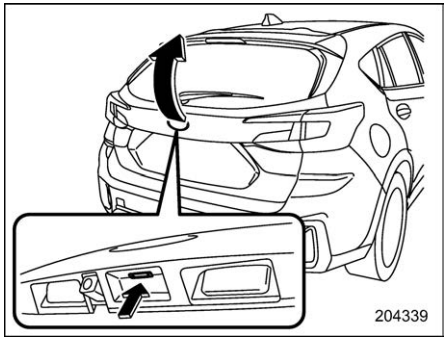

Rear gate opener button

1. Open the rear gate using the appropriate method.

	Models with the access key	Models without the access key
When the rear gate is locked	Press and hold the rear gate opener button while carrying the access key.	Unlock the rear gate, and then press and hold the rear gate opener button.
When the rear gate is unlocked	Press and hold the rear gate opener button.	

2. Hold the rear gate and lift it up slowly.

NOTE

If the rear gate cannot be opened due to a discharged vehicle battery, a malfunction in the door locking/unlocking system or other causes, you can unlock it by manually operating the rear gate lock release lever. For the procedure, refer to "Rear Gate – If the Rear Gate Cannot Be Opened" ☞P427.

Closing the rear gate:

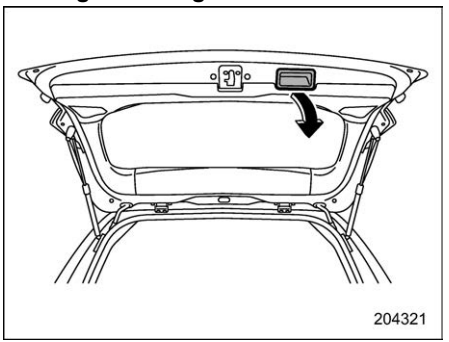

Lower the rear gate slowly and push down firmly until the latch engages.

The rear gate can be lowered easily if you pull down on the inside handle as shown in the illustration.

⚠ WARNING

- **To prevent dangerous exhaust gas from entering the vehicle, always keep the rear gate closed while the engine is running.**
- **Do not attempt to shut the rear gate while holding the recessed grip. Also do not close the rear gate by pulling the grip from inside the cargo space. There is a danger of your hand being caught and injured.**

⚠ CAUTION

- **Do not jam a plastic bag in or place cellophane tape on the rear gate stays or scratch the stays while loading or unloading cargo. That could cause leakage of gas from the stays, which may result in their inability to hold the rear gate open.**
- **Be careful not to hit your head or face on the rear gate when opening or closing the rear gate and when loading or unloading cargo.**
- **Never attempt to close the rear gate by grabbing or pressing on the outer metal surface or da-**

mage may result.

- Always use the inside handle to avoid damaging the exterior surface of the gate.

2-10. Moonroof (If Equipped)

WARNING

Never let anyone's hands, arms, head or any objects protrude from the moonroof. A person could be seriously injured if any of the following conditions occur.

- The vehicle stops suddenly.
- The vehicle turns sharply.
- The vehicle is involved in an accident.
- Body parts protruding from the vehicle are struck by outside objects.

To avoid serious personal injury caused by entrapment, always conform to the following instructions without exception.

- Before closing the moonroof, make sure that no one's hands, arms, head or other objects will be accidentally caught in the moonroof.
- Always carry the key when you leave the vehicle for safety reasons and never allow an unattended child to remain in the vehicle. Failure to follow this procedure could result in injury to a child operating the moonroof.
- Never try to check the anti-entrapment function by deliberately placing part of your body in the moonroof.

CAUTION

- Do not sit on the edge of the open moonroof.
- Do not operate the moonroof if falling snow or extremely cold conditions have caused it to freeze shut.
- The anti-entrapment function does not operate when the moonroof is being tilted down. Be sure to confirm that it is safe to tilt the moonroof down before doing so.
- If the moonroof does not close, have the system checked by a SUBARU dealer.

The moonroof has both tilting and sliding functions.

The moonroof operates only when the ignition switch is in the "ON" position.

– CONTINUED –

■ Moonroof Switches

▼ Tilting moonroof

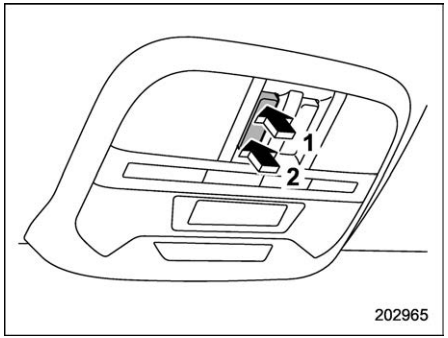

1 Up
2 Down

To raise the moonroof, press and hold the switch in the up side and release. To lower the moonroof, press and hold the switch in the down side.

NOTE

Release the switch after the moonroof has been raised or has been lowered completely. Pressing the switch continuously may cause damage to the moonroof.

▼ Sliding moonroof

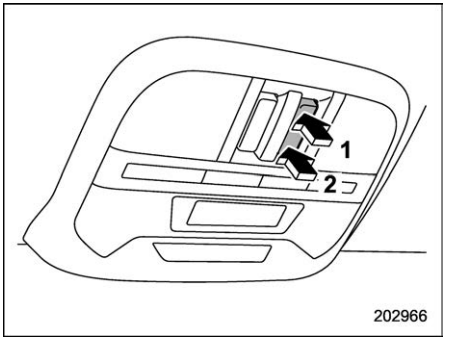

1 Open
2 Close

Opening the moonroof:

To open the moonroof using the automatic function, press and hold the open side of the switch and then release it.

To stop the moonroof at a selected midway position while opening it, momentarily press the open or close side of the switch.

The sunshade will also be opened together with the moonroof. The moonroof will stop at a position approximately 0.6 in (1.5 cm) away from the fully opened position.

Press the open side of the switch again to open the moonroof completely.

Closing the moonroof:

To close the moonroof using the automatic function, press and hold the close side of the switch and then release it.

To stop the moonroof at a selected midway position while closing it, momentarily press the open or close side of the switch.

NOTE

- **After washing the vehicle or after it rains, wipe away water on the roof prior to opening the moonroof to prevent drops of water from falling into the passenger compartment.**
- **Driving with the moonroof fully open can cause an annoying sound to be generated at high speeds. If this occurs, use the moonroof at the initial stop position of 0.6 in (1.5 cm) away from the fully opened position.**
- **For the sake of safety, it is recommended that you avoid driving with the moonroof fully opened.**

▼ Anti-entrapment function

When the moonroof senses a substantial enough object trapped between its glass and the vehicle's roof during closure, it automatically moves back to the fully open position and stops there. The anti-entrapment function may also be activated by a

strong shock on the moonroof even when there is nothing trapped.

CAUTION

Never attempt to test this function using fingers, hands or other parts of your body.

NOTE

For the sake of safety, it is recommended that you avoid driving with the moonroof fully opened.

■ Sunshade

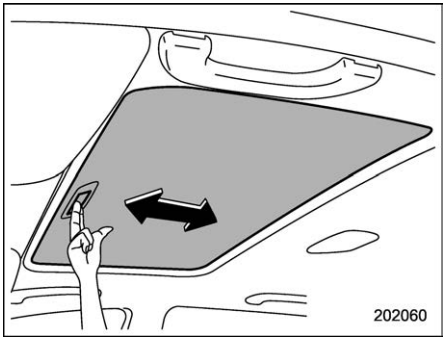

The sunshade can be slid forward or backward by hand while the moonroof is closed.

If the moonroof is opened, the sunshade also moves back.

3-1. Ignition Switch (Models without Push-Button Start System) 146
Key Positions 146
Key Reminder Chime 147
Ignition Switch Light 147
3-2. Push-Button Ignition Switch (Models with Push-Button Start System) 148
Safety Precautions 148
Operating Range for Push-Button Start System ... 148
Switching Power Status 149
When Access Key Fob Does Not Operate Properly 150
3-3. Hazard Warning Flasher 150
3-4. Meters and Gauges 150
Speedometer 150
Tachometer 151
Odometer 151
Double Trip Meter 151
Fuel Gauge 152
Engine Coolant Temperature Gauge 152
Combination Meter Settings 153
3-5. Illumination Brightness Control 153
Auto Dimmer Cancel Function 154
3-6. Warning and Indicator Lights 154
Seatbelt Warning Light and Chime 155
SRS Airbag System Warning Light 158
Front Passenger's Frontal Airbag ON and OFF Indicator Lights 158
CHECK ENGINE Warning Light/Malfunction Indicator Light 159
Charge Warning Light 160
Oil Pressure Warning Light 160
Engine Low Oil Level Warning Light 160
AT OIL TEMP Warning Light 160
Low Tire Pressure Warning Light (U.S.-Spec. Models) 161
ABS Warning Light 162
Brake System Warning Light 163
Electronic Parking Brake Indicator Light 164
Auto Vehicle Hold Indicator Light 165
Low Fuel Warning Light 165
Door Open Indicator Light 166
Engine Hood Open Warning Light 166
Windshield Washer Fluid Warning Light 166
All-Wheel Drive Warning Light 166
Power Steering Warning Light 166
Vehicle Dynamics Control Warning Light/ Vehicle Dynamics Control Operation Indicator Light 167
Vehicle Dynamics Control OFF Indicator Light 168
Warning Chimes and Warning Indicator of the Keyless Access with Push-Button Start System (If Equipped) 168
Security Indicator Light 173
SI-DRIVE Indicator (If Equipped) 174
Select Lever/Gear Position Indicator 174
Turn Signal Indicator Lights 174
High Beam Indicator Light 174
High Beam Assist Indicator 174
Automatic Headlight Beam Leveler Warning Light 174
LED Headlight Warning Light 175

Steering Responsive Headlight OFF Indicator Light 175
Steering Responsive Headlight Warning Light 175
Headlight Indicator Light 175
Front Fog Light Indicator Light (If Equipped) 175
Auto Start Stop Warning Light (Yellow) 175
Auto Start Stop OFF Indicator Light 175
Auto Start Stop Indicator Light (Green) 175
Auto Start Stop No Activity Detected Indicator Light 176
BSD/RCTA Warning Indicator (If Equipped) 176
BSD/RCTA OFF Indicator (If Equipped) 176
Icy Road Surface Warning Indicator 176
RAB Warning Indicator (If Equipped) 176
RAB OFF Indicator (If Equipped) 176
Sonar Audible Alarm OFF Indicator (If Equipped) 176
Driver Monitoring System Operation Indicator Light (Green) (If Equipped) 177
Driver Monitoring System Warning Light (Yellow) (If Equipped) 177
Driver Monitoring System OFF Indicator Light (If Equipped) 177
Driver Monitoring System Temporary Stop Indicator Light (If Equipped) 177
3-7. Combination Meter Display (Color LCD) 177
Basic Operation 178
Welcome Screen (Opening Animation) and Good-Bye (Ending Animation) Screen 179
Warning Screen 179
Meter Information Screen 179
Telltale Screen 181
Basic Screens 182
Digital Speed Screen 185
3-8. Center Information Display (CID) 186
Features 186
Welcome Screen 186
Good-Bye Screen 187
Interruption Screen 187
Touch Screen Operations 187
11.6-Inch Display Models 188
Dual 7.0-Inch Display Models 211
3-9. Clock 225
Setting the Clock Manually 225
Setting the Clock Automatically 226
Time Zone (Models with Navigation System) 227
Daylight Saving Time (Models with Navigation System) 227
3-10. Valet Mode 228
Activation of Valet Mode 228
Deactivation of Valet Mode 229
3-11. Light Control Switch 229
Headlights 230
High/Low Beam Change (Dimmer) 233
Headlight Flasher 233
High Beam Assist Function 233
Daytime Running Light System 236
3-12. Steering Responsive Headlight (SRH) 237
3-13. Headlight Beam Leveler 238
3-14. Front Fog Light Switch (If Equipped) 238
3-15. Turn Signal Lever 239
One-Touch Lane Changer 239

3-16. Wiper and Washer 240
Windshield Wiper and Washer Switches..... 241
Rear Window Wiper and Washer Switch..... 242
3-17. Defogger and Deicer..... 243
3-18. Mirrors 245
Inside Mirror (without Auto-Dimming Function) (If Equipped)..... 245
Auto-Dimming Mirror (If Equipped)..... 245
Auto-Dimming Mirror/Compass (If Equipped)..... 246
Auto-Dimming Mirror/Compass with HomeLink® (If Equipped) 247
Outside Mirrors 255
3-19. Tilt/Telescopic Steering Wheel 256
Heated Steering Wheel System (If Equipped) 256
3-20. Horn 257

3-1. Ignition Switch (Models without Push-Button Start System)

WARNING

- **Never turn the ignition switch to "LOCK" while the vehicle is being driven or towed because that will lock the steering wheel, preventing steering control. And when the engine is turned off, it takes a much greater effort than usual to steer.**
- **Before leaving the vehicle, always remove the key from the ignition switch for safety and never allow an unattended child to remain in the vehicle. Failure to follow this procedure could result in injury to a child or others. Children could operate the power windows, the moonroof or other controls or even make the vehicle move.**

CAUTION

Do not attach a large key holder or key case to either key. If it banged against your knees or hands while you are driving, it could turn the ignition switch from the "ON" position to the "ACC" or "LOCK" position, thereby stopping the engine. Also, if the key is attached to a key holder or to a large bunch of other keys, centrifugal force may act on it as the vehicle moves, resulting in unwanted turning of the ignition switch.

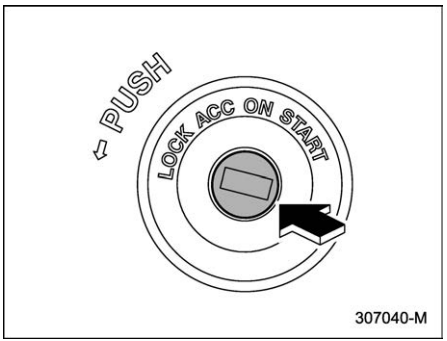

The ignition switch has four positions: LOCK, ACC, ON and START.

NOTE

- **Keep the ignition switch in the "LOCK" position when the engine is not running.**
- **Using electrical accessories for a long time with the ignition switch in the "ON" or "ACC" position can cause the battery to go dead.**
- **If the ignition switch will not move from the "LOCK" position to the "ACC" position, turn the steering wheel slightly to the left and right as you turn the ignition switch.**

■ Key Positions

Position	Description
LOCK	The key can only be inserted or removed in this position. The ignition switch will lock the steering wheel when you remove the key.
ACC	In this position the electrical accessories (audio, accessory power outlet, etc.) can be used.
ON	This is the normal operating position after starting the engine.
START	The engine is started in this position.

CAUTION

Do not turn the ignition switch to the "START" position while the engine is running.

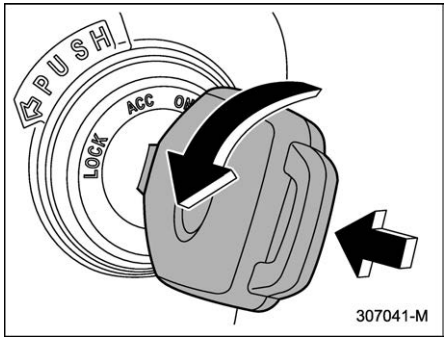

NOTE

- **To turn the key from the “ACC” to “LOCK” position:**
  - **Place the select lever in the “P” position.**
  - **Push in and turn the key.**
- **If your registered key fails to start the engine, pull out the key once (the security indicator light will blink), and then insert the key again and turn it to the “START” position again to restart the engine.**

- **The engine may not start in the following cases:**

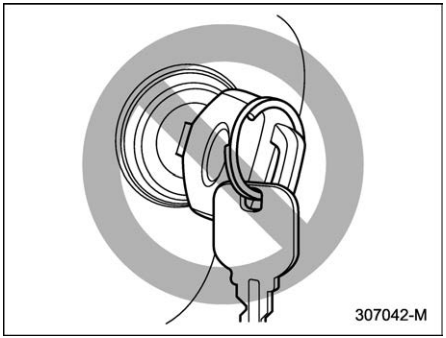

  - **The key grip is touching another key or a metallic key holder.**

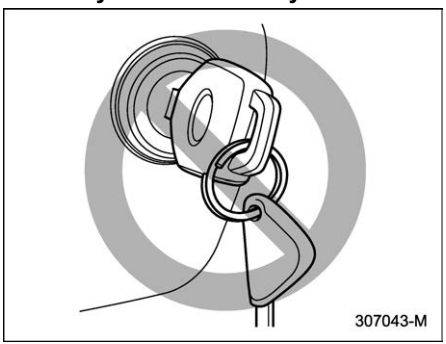

  - **The key is near another key that contains an immobilizer transponder.**
  - **The key is near or touching another transmitter.**

■ Key Reminder Chime

The reminder chime sounds when the driver’s door is opened and the ignition switch is in the “LOCK” or “ACC” position.

The chime stops under the following conditions.

- The ignition switch is turned to the “ON” position.
- The key is removed from the ignition switch.
- The driver’s door is closed.

■ Ignition Switch Light

For easy access to the ignition switch in the dark, the ignition switch light illuminates when driver’s door is opened or when the driver’s door is unlocked using the remote keyless entry transmitter.

The light remains illuminated for approximately 30 seconds and gradually turns off under the following conditions.

- The driver’s door is closed.
- The doors are unlocked using the remote keyless entry transmitter.

– CONTINUED –

The light gradually turns off under the following conditions.

- The ignition switch is turned to the “ON” position.
- The doors are locked using the remote keyless entry transmitter.

3-2. Push-Button Ignition Switch (Models with Push-Button Start System)

■ Safety Precautions

Refer to “Safety Precautions” ☞P107.

■ Operating Range for Push-Button Start System

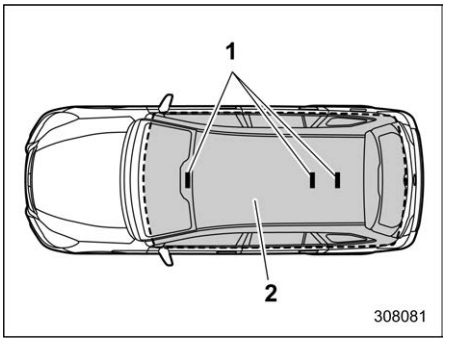

1 Antennas
2 Operating range

NOTE

- **If the access key fob is not detected within the operating range of the antennas inside the vehicle, the push-button ignition switch and the engine start cannot be operated.**
- **Even when the access key fob is outside the vehicle, if it is placed too close to the glass, it may be possible to switch the power or to start the engine.**
- **Do not leave the access key fob in the following places. It may become impossible to operate the push-button ignition switch and the engine start.**
  - **On the instrument panel**
  - **On the floor**
  - **Inside the glove box**
  - **Inside the door trim pocket**
  - **On the rear seat**
  - **At the corner of the cargo area**
- **When operating the push-button ignition switch or starting the engine, if the access key fob battery is discharged, perform the procedure described in “Access Key Fob – If Access Key Fob Does Not Operate Properly” ☞P426. In such a case, replace the battery immediately. Refer to “Replacing Battery of Access Key Fob” ☞P486.**

Switching Power Status

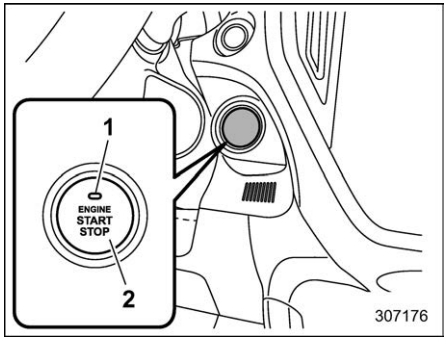

1 Operation indicator
2 Push-button ignition switch

The power status is switched every time the push-button ignition switch is pressed.

1. Carry the access key fob, and sit in the driver's seat.
2. Make sure the select lever is in the "P" position.
3. Press the push-button ignition switch without depressing the brake pedal. Every time the button is pressed, the power is switched in the sequence of "OFF", "ACC", "ON" and "OFF". When the engine is stopped and the push-button ignition switch is in "ACC" or "ON", the operation indicator on the push-button ignition switch illuminates in orange.

Power status	Indicator color	Operation
OFF	Turned off	Power is turned off.
ACC	Orange	The following systems can be used: audio and accessory power outlet.
ON	Orange (while engine is stopped)	All electrical systems can be used.
	Turned off (while engine is running)	

CAUTION

- **To prevent the vehicle battery from discharging, do not leave the push-button ignition switch in the "ON" or "ACC" position for a long time.**
- **To avoid a malfunction, observe the following precautions.**
  - **Do not spill drinks or other liquids on the push-button ignition switch.**
  - **Do not touch the push-button ignition switch with a hand that is soiled with oil or other contaminants.**
- **If the push-button ignition switch does not operate smoothly, stop the operation. Contact a SUBARU dealer immediately.**
- **If the operation indicator on the push-button ignition switch does not illuminate even when the instrument panel illumination is turned on, have the vehicle inspected at a SUBARU dealer.**
- **If the vehicle was left in the hot sun for a long time, the surface of the push-button ignition switch may get hot. Be careful not to burn yourself.**

NOTE

- **When operating the push-button ignition switch, firmly press it all the way.**
- **If the push-button ignition switch is pressed quickly, the power may not turn on or off.**
- **If the indicator light on the push-button ignition switch flashes in green when the push-button ignition switch is pressed, steering is**

– CONTINUED –

locked. When this occurs, press the push-button ignition switch while turning the steering wheel left and right.

▼ **Battery drainage reduction function**

When the push-button ignition switch is left in the “ACC” position for approximately 20 minutes or the “ON” position (the engine is not running) for approximately 1 hour, the push-button ignition switch will be automatically switched to “OFF” to reduce the possibility of the battery going dead. (This function is activated when the select lever is in the “P” position.)

■ When Access Key Fob Does Not Operate Properly

Refer to “Access Key Fob – If Access Key Fob Does Not Operate Properly” ☞P426.

3-3. Hazard Warning Flasher

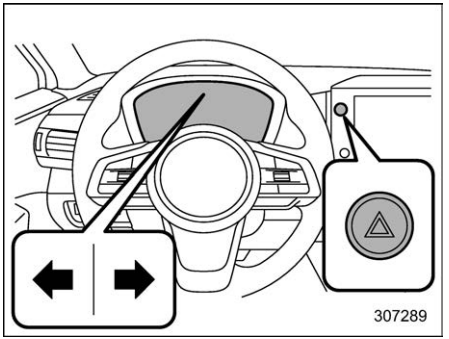

The hazard warning flasher is used to warn other drivers when you have to park your vehicle under emergency conditions. The hazard warning flasher works with the ignition switch in any position.

To turn on the hazard warning flasher, press the hazard warning flasher switch on the instrument panel. All the turn signal lights and the turn signal indicator lights will flash. To turn off the flasher, press the switch again.

NOTE

When the hazard warning flasher is on, the turn signals do not work.

3-4. Meters and Gauges

NOTE

Liquid crystal displays are used in some of the meters and gauges in the combination meter. You will find their indications hard to see if you wear polarized glasses.

■ Speedometer

The speedometer shows the vehicle speed.

NOTE

The initial movement of the meter needles and gauge needles that occurs when the ignition switch is turned to the “ON” position can be activated or deactivated.

For details, refer to “General settings” ☞P196 (11.6-inch display models) or “General settings” ☞P213 (dual 7.0-inch display models).

■ Tachometer

The tachometer shows the engine speed in thousands of revolutions per minute.

⚠ CAUTION

Do not operate the engine with the pointer of the tachometer in the red zone. In this range, fuel injection will be cut by the engine control module to protect the engine from overrevving. The engine will resume running normally after the engine speed is reduced below the red zone.

NOTE

The initial movement of the meter needles and gauge needles that occurs when the ignition switch is turned to the "ON" position can be activated or deactivated.

For details, refer to "General settings" ☞P196 (11.6-inch display models) or "General settings" ☞P213 (dual 7.0-inch display models).

■ Odometer

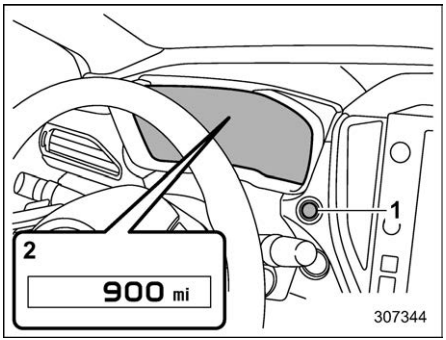

1 TRIP RESET switch
2 Odometer

This meter displays the odometer when the ignition switch is in the "ON" position.

The odometer shows the total distance that the vehicle has been driven.

NOTE

If you press the TRIP RESET switch when the ignition switch is in the "LOCK"/"OFF" or "ACC" position, the odometer/trip meter will light up. The indicators will turn off when the TRIP RESET switch is not operated for approximately 10 seconds.

■ Double Trip Meter

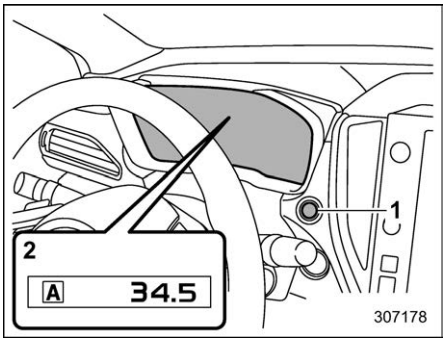

1 TRIP RESET switch
2 Trip meter

This meter displays the two trip meters when the ignition switch is in the "ON" position.

The trip meter shows the distance that the vehicle has been driven since you last set it to zero.

The display can be switched as shown in the following sequence by pressing the TRIP RESET switch.

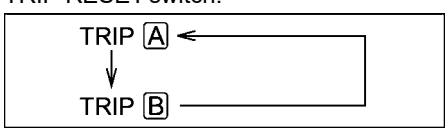

– CONTINUED –

To reset the trip meter, select either the A trip or B trip meter, then press and hold the TRIP RESET switch.

CAUTION

To ensure safety, do not attempt to change the function of the indicator during driving, as an accident could result.

NOTE

- **If the connection between the combination meter and battery is broken for any reason such as vehicle maintenance or fuse replacement, the data recorded on the trip meter will be lost.**
- **If you press the TRIP RESET switch when the ignition switch is in the "LOCK"/"OFF" or "ACC" position, the odometer/trip meter will light up. It is possible to switch between the A trip meter and B trip meter indications while the odometer/trip meter is lit up.**
  In addition, it is possible to reset the trip meter by pressing and holding the TRIP RESET switch.
  The indicators will turn off when the TRIP RESET switch is not operated for approximately 10 seconds.

■ Fuel Gauge

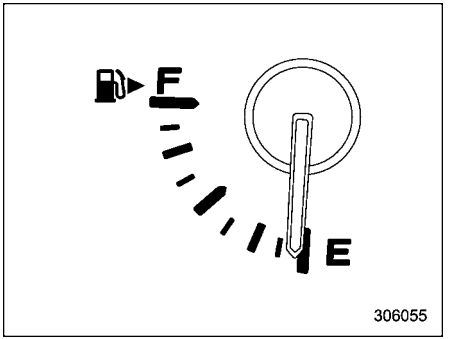

The fuel gauge shows the approximate amount of fuel remaining in the tank.

When the ignition switch is in the "LOCK"/"OFF" or "ACC" position, the fuel gauge shows "E" even if the fuel tank contains fuel.

The gauge may move slightly due to fuel level movement in the tank (e.g., during braking, turning or acceleration).

NOTE

- **You will see the "⛽▶" sign in the fuel gauge. This indicates that the fuel filler lid is located on the right side of the vehicle.**
- **If you press the TRIP RESET switch while the ignition switch is in the "LOCK"/"OFF" or "ACC" position, the fuel gauge will light up and indicate the amount of fuel remaining in the tank.**
  The gauge will turn off when the TRIP RESET switch is not operated for approximately 10 seconds.

■ Engine Coolant Temperature Gauge

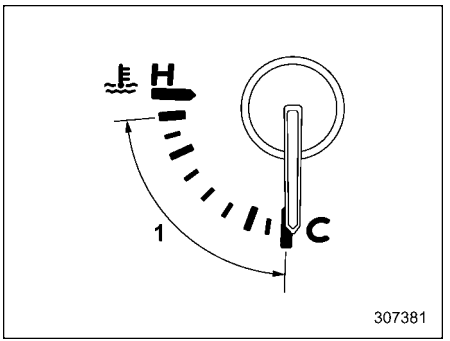

1 Normal operating range

The temperature gauge shows engine coolant temperature when the ignition switch is in the "ON" position.

The coolant temperature will vary in accordance with the outside temperature and driving conditions.

We recommend that you drive moderately until the pointer of the temperature gauge reaches near the middle of the range. Engine operation is optimum with the engine coolant at this temperature range and high revving operation when the engine is not warmed up enough should be avoided.

CAUTION

If the pointer exceeds the normal operating range, safely stop the vehicle as soon as possible.

Refer to "Engine Overheating" ☞P420.

■ Combination Meter Settings

Meter settings can be set on the center information display. For details, perform the procedures described in "General settings" ☞P196 (11.6-inch display models) or "General settings" ☞P213 (dual 7.0-inch display models).

3-5. Illumination Brightness Control

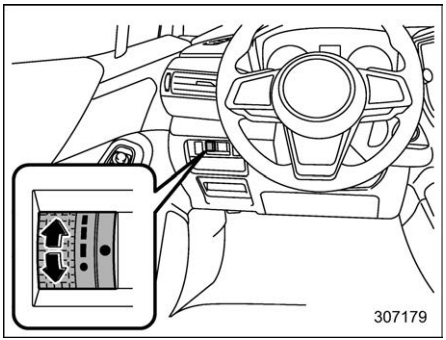

The illumination brightness of the combination meter and center information display dims under the following conditions.

- The light switch is in the "≣DOE" or "≣D" position when the ambient light is dark.
- The light switch is in the "AUTO" position and the headlights illuminate automatically.

You can adjust the illumination brightness for better visibility.

To brighten, turn the control dial upward.

To darken, turn the control dial downward.

NOTE

- **When the control dial is turned fully upward, the illumination brightness becomes the maximum and the automatic dimming function does not work at all.**
- **The brightness setting is not canceled even when the ignition switch is turned to the "LOCK"/"OFF" position.**
- **The operation method of illumination brightness will differ depending whether or not "Brightness Dial" in the center information display is on. Refer to the operation method indicated the following table.**

"Brightness Dial" is on.

Operational item	Combination meter	Center information display
Control dial	Available	Available
"Brightness"*1 on the center information display	Not available	Not available

– CONTINUED –

“Brightness Dial” is off.

Operational item	Combination meter	Center information display
Control dial	Available	Not available
“Brightness” on the center information display	Not available	Available

***1: When “Brightness Dial” is on, “Brightness” on the center information display is not available.**

For details about “Brightness Dial” on/off settings, refer to “General settings” ☞P196 (11.6-inch display models) or “General settings” ☞P213 (dual 7.0-inch display models).

■ Auto Dimmer Cancel Function

When the ambient light is bright, the illumination brightness is set to the maximum regardless of the position of the control dial. In this case, you cannot adjust the illumination brightness by using the control dial. When the ambient light is dark, you can dim the illumination brightness as described above.

The operational/non-operational setting and sensitivity of the auto dimmer cancel function can be changed by your SUBARU dealer. Contact your SUBARU dealer for details.

3-6. Warning and Indicator Lights

Several of the warning and indicator lights illuminate momentarily and then go out when the ignition switch is initially turned to the “ON” position. This permits checking the operation of the bulbs.

Apply the parking brake and turn the ignition switch to the “ON” position. For the system check, the following lights illuminate and turn off after several seconds or after the engine has started:

: Seatbelt warning light (The seatbelt warning light turns off only when the driver fastens the seatbelt.)/Front passenger’s seatbelt warning light (The seatbelt warning light turns off only when the front seat passenger fastens the seatbelt.)

: Rear seatbelt warning light

: SRS airbag system warning light

ON : Front passenger’s frontal airbag ON indicator light

OFF : Front passenger’s frontal airbag OFF indicator light

CHECK ENGINE / : CHECK ENGINE warning light/ Malfunction indicator light

: Charge warning light

: Oil pressure warning light

: Engine low oil level warning light

ABS / (ABS): ABS warning light

: Vehicle Dynamics Control warning light/ Vehicle Dynamics Control operation indicator light

: Vehicle Dynamics Control OFF indicator light

BRAKE / (!): Brake system warning light

PARK / (P): Electronic parking brake indicator light

: Power steering warning light

(!): Low tire pressure warning light (U.S.-spec. models)

: Low fuel warning light

(A): Auto Start Stop warning light (yellow)

If any lights fail to illuminate, it indicates a burned-out bulb or a malfunction of the corresponding system.

Consult your authorized SUBARU dealer for repair.

■ Seatbelt Warning Light and Chime

Your vehicle is equipped with a seatbelt warning device at the driver's and passenger's seat, as required by current safety standards.

▼ Driver's and front passenger's seats

With the ignition switch turned to the "ON" position, this device reminds the driver and front passenger to fasten their seatbelts by illuminating the warning lights in the locations indicated in the following illustration and sounding a chime.

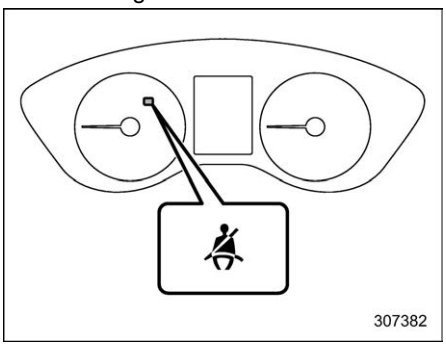

Driver's warning light

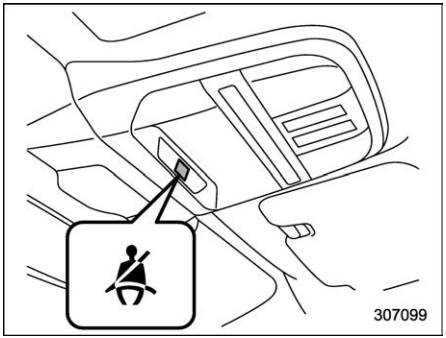

Front passenger's warning light

When the ignition switch is turned to the "ON" position, the driver's and/or front passenger's warning light will illuminate, then it will blink for several seconds. If the seatbelt of the driver's seat is not fastened, the warning chime may make a beep sound.

NOTE

- **If the driver's and/or front passenger's seatbelt(s) are/is not fastened while driving, the seatbelt warning system operates as follows according to the vehicle speed.**
  - **The warning light will illuminate when the vehicle speed is approximately 4 mph (6 km/h) or less.**

– CONTINUED –

- **The warning light will blink, and the warning chime will make a beep sound when the vehicle speed is between approximately 4 mph (6 km/h) and 13 mph (20 km/h). The warning chime will stop when the vehicle stops.**
- **The warning light will blink, and the warning chime will sound loudly when 15 seconds have elapsed when the vehicle speed is between approximately 4 mph (6 km/h) and 13 mph (20 km/h).**
- **The warning light will blink, and the warning chime will sound loudly when the vehicle speed is approximately more than 13 mph (20 km/h).**

- **The warning light will turn off and the warning chime will stop when the seatbelt is fastened.**

If there is no passenger on the front passenger's seat, the seatbelt warning system for the front passenger's seat will be deactivated. The front passenger's seatbelt warning system monitors whether or not there is a passenger on the front passenger's seat.

CAUTION

Observe the following precautions. Failure to do so may prevent the device from functioning correctly or cause the device to fail.

- **Do not install any accessory such as a table or TV onto the seatback.**
- **Do not store a heavy load in the seatback pocket.**
- **Do not allow the rear seat occupant to place his/her hands or legs on the front passenger's seatback, or allow him/her to pull the seatback.**
- **Do not use front seats with their backward-forward position and seatback not being locked into place securely. If any of them are not locked securely, adjust them again. For adjusting procedure, refer to "Front Seats" ☞P28.**

If the seatbelt warning system for the front passenger's seat does not function correctly (e.g., it is activated even when the front passenger's seat is empty or it is deactivated even when the front passenger has not fastened his/her seatbelt), take the following actions.

- Ensure that no article is placed on the seat other than a child restraint system and its child occupant, although we strongly recommend that all children sit in the rear seat properly restrained.
- Ensure that there is no article left in the seatback pocket.
- Ensure that the backward-forward position and seatback of front passenger's seat are locked into place securely by moving the seat back and forth.

If still the seatbelt warning system for front passenger's seat does not function correctly after taking relevant corrective actions described above, immediately contact your SUBARU dealer for an inspection.

▼ **Rear passenger's seats**

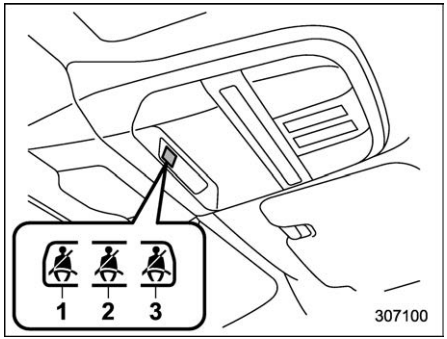

Rear seatbelt warning light

1 Rear left seat
2 Rear center seat
3 Rear right seat

With the ignition switch turned to the "ON" position, the seatbelt warning light and chime reminds the rear passenger to fasten their seatbelt by illuminating the warning lights in the locations indicated in the above illustration and sounding a chime.

WARNING

- **The driver must check that all the passengers have fastened their seatbelts properly since the seatbelt warning system may not detect passengers under the following circumstances.**
  - **When cushions or child restraint systems, etc., are used.**
  - **When a child or small adult is sitting in the seat.**
- **Observe the following precautions**
  - **Do not apply any strong impact to the rear seat.**
  - **Do not fold the seatback forward when objects are on the seat.**
  - **Do not spill liquid on the rear seat. If liquid is spilled, wipe it off immediately.**
  - **Do not remove or disassemble the rear seat.**

NOTE

- **The seatbelt warning system of the rear seat detects if the seat is occupied by a passenger. Heavy cargo or large pets on the rear seat may result in the activation of the passenger seatbelt warning light and chime. Fastening the rear seatbelt prior to loading cargo or large pets will avoid activating the passenger seatbelt warning light and chime.**
- **When folding the rear seat, ensure that the seat is empty prior to folding. Items caught between the seat bottom and seatback, when folded, may damage the seat surface or activate the passenger seatbelt warning light and chime.**

If passengers in the rear seats do not fasten their seatbelts while the ignition switch is turned to the "ON" position, the seatbelt warning lights will illuminate or blink to indicate that their seatbelts are not fastened.

NOTE

- **If the rear passenger's seatbelt(s) are/is still not fastened while driving, the seatbelt warning system operates as follows according to the vehicle speed.**
  - **The warning light will illuminate when the vehicle speed is approximately 4 mph (6 km/h) or less.**
  - **When the vehicle speed is approximately between 4 mph (6 km/h) and 13 mph (20 km/h), the seatbelt warning lights will blink and a warning chime will sound. The chime will make a beep sound for 15 seconds, and it then**

– CONTINUED –

will become louder and continue for 35 seconds. The warning light will blink for 50 seconds, then it will illuminate steadily and the chime will stop.

– The warning light will blink, and the beep will sound loudly for 35 seconds when the vehicle speed is approximately more than 13 mph (20 km/h). After 35 seconds, the blinking warning light will illuminate steadily and the chime will stop. The warning lights will continue to illuminate until their seatbelts are fastened.

- **The warning light will turn off and the warning chime will stop when the seatbelt is fastened.**

■ SRS Airbag System Warning Light

WARNING

If the warning light exhibits any of the following conditions, immediately stop the vehicle in a safe place, and consult a SUBARU dealer. Unless a technician checks and repairs the system as needed, the seatbelt pretensioners and/or the SRS airbag will not operate properly in the event of a collision, which may result in injury.

- **Flashing or flickering of the warning light**
- **No illumination of the warning light when the ignition switch is first turned to the "ON" position**
- **Continuous illumination of the warning light**
- **Illumination of the warning light while driving**

For details about the components monitored by the warning light, refer to "SRS Airbag System Monitors" ☞P99.

■ Front Passenger's Frontal Airbag ON and OFF Indicator Lights

ON: Front passenger's frontal airbag ON indicator light

OFF: Front passenger's frontal airbag OFF indicator light

For details about the operating conditions of SRS seat cushion airbag, refer to "SUBARU Advanced Frontal Airbag System" ☞P80.

The front passenger's frontal airbag ON and OFF indicator lights show you the status of the front passenger's SRS frontal airbag.

The indicator lights are located as shown in the illustration.

When the ignition switch is turned to the

"ON" position, both the ON and OFF indicator lights illuminate for 6 seconds during which time the system is checked. Following the system check, both indicator lights turn off for 2 seconds. After that, one of the indicator lights illuminates depending on the status of the front passenger's SRS frontal airbag determined by the SUBARU advanced frontal airbag system monitoring.

If the front passenger's SRS frontal airbag is activated, the passenger's frontal airbag ON indicator light will illuminate while the OFF indicator light will remain off.

If the front passenger's SRS frontal airbag is deactivated, the passenger's frontal airbag ON indicator light will remain off while the OFF indicator light will illuminate.

With the ignition switch turned to the "ON" position, if both the ON and OFF indicator lights remain illuminated or off simultaneously even after the system check period, the system is malfunctioning. Contact your SUBARU dealer immediately for an inspection.

■ CHECK ENGINE Warning Light/Malfunction Indicator Light

CHECK ENGINE /

CAUTION

If the CHECK ENGINE warning light/malfunction indicator light illuminates while you are driving, have your vehicle checked/repaired by your SUBARU dealer as soon as possible. Continued vehicle operation without having the emission control system checked and repaired as necessary could cause serious damage, which may not be covered by your vehicle's warranty.

If this light illuminates steadily or blinks while the engine is running, it may indicate that there is at least one problem or potential problem somewhere in the emission control system.

▼ If the light illuminates constantly

If the light illuminates constantly while driving or does not turn off after the engine starts, an emission control system malfunction has been detected.

You should have your vehicle checked by an authorized SUBARU dealer immediately.

NOTE

This light also illuminates when the fuel filler cap is not tightened until it clicks.

If you have recently refueled your vehicle, the cause of the CHECK ENGINE warning light/malfunction indicator light coming on could be a loose or missing fuel filler cap. Remove the cap and retighten it until it clicks. Make sure nothing is interfering with the sealing of the cap. Tightening the cap will not make the CHECK ENGINE warning light/malfunction indicator light turn off immediately. It may take several driving trips. If the light does not turn off, take your vehicle to your authorized SUBARU dealer immediately.

▼ If the light is blinking

If the light is blinking while driving, an engine misfire condition has been detected which may damage the emission control system.

To prevent serious damage to the emission control system, you should conform to the following instructions.

- Reduce vehicle speed.
- Avoid hard acceleration.
- Avoid steep uphill grades.
- Reduce the amount of cargo, if possible.

– CONTINUED –

The CHECK ENGINE warning light/malfunction indicator light may stop blinking and illuminate steadily after several driving trips. You should have your vehicle checked by an authorized SUBARU dealer immediately.

■ Charge Warning Light

If this light illuminates when the engine is running, it may indicate that the charging system is not working properly.

If the light illuminates while driving or does not turn off after the engine starts, stop the engine at the first safe opportunity and check the drive belt. If the drive belt is loose, broken or if the drive belt is in good condition but the light remains illuminated, contact your nearest SUBARU dealer immediately.

■ Oil Pressure Warning Light

CAUTION

Do not operate the engine with the oil pressure warning light on. This may cause serious engine damage.

If this light illuminates when the engine is running, it may indicate that the engine oil pressure is low and the lubricating system is not working properly.

If the light illuminates while driving or does not turn off after the engine starts, stop the engine at the first safe opportunity and contact your nearest SUBARU dealer immediately.

■ Engine Low Oil Level Warning Light

This light appears when the engine oil level decreases to the lower limit.

If the warning light appears, check the engine oil level on a level surface. When the engine oil level is not within the normal range, refill with engine oil. Refer to “Engine Oil” ☞P451. After adding or changing the engine oil, warm up the engine and stop it on a level surface, then start the engine after a lapse of 1 minute or more. Confirm that the warning light has turned off after the engine has started. If the warning light does not turn off after refilling the engine oil, or the light appears even though the engine oil level is within the normal range, have the vehicle checked by a SUBARU dealer.

NOTE

- **The oil level will be detected by the system just after turning the ignition switch to the “OFF” position. If the oil level is below the lower limit when the ignition switch is turned to the “ON” position, the engine low oil level warning light will turn on.**
- **When the vehicle is parked on a steep slope, the engine low oil level warning light may not illuminate even if the oil level is below the lower limit to avoid erroneous lighting.**

■ AT OIL TEMP Warning Light

If this light illuminates when the engine is running, it may indicate that the transmission fluid temperature is too hot.

If the light illuminates while driving, immediately stop the vehicle in a safe place and let the engine idle until the warning light turns off.

▼ Transmission control system warning

If the AT OIL TEMP warning light flashes after the engine has started, it may indicate that the transmission control system is not working properly. Contact your nearest SUBARU dealer for service immediately.

Low Tire Pressure Warning Light (U.S.-Spec. Models)

When the ignition switch is turned to the "ON" position, the low tire pressure warning light will illuminate for approximately 2 seconds to check that the tire pressure monitoring system (TPMS) is functioning properly. If there is no problem and all tires are properly inflated, the light will go out.

Each tire, including the spare (if provided), should be checked monthly when cold and inflated to the inflation pressure recommended by the vehicle manufacturer on the vehicle placard or tire inflation pressure label. (If your vehicle has tires of a different size than the size indicated on the vehicle placard or tire inflation pressure label, you should determine the proper tire inflation pressure for those tires.)

As an added safety feature, your vehicle has been equipped with a tire pressure monitoring system (TPMS) that illuminates a low tire pressure telltale when one or more of your tires is significantly under-inflated. Accordingly, when the low tire pressure telltale illuminates, you should stop and check your tires as soon as possible, and inflate them to the proper pressure. Driving on a significantly under-inflated tire causes the tire to overheat and can lead to tire failure. Under-inflation also reduces fuel efficiency and tire tread life, and may affect the vehicle's handling and stopping ability.

Please note that the TPMS is not a substitute for proper tire maintenance, and it is the driver's responsibility to maintain correct tire pressure, even if under-inflation has not reached the level to trigger illumination of the TPMS low tire pressure telltale.

Your vehicle has also been equipped with a TPMS malfunction indicator to indicate when the system is not operating properly. The TPMS malfunction indicator is combined with the low tire pressure telltale. When the system detects a malfunction, the telltale will flash for approximately one minute and then remain continuously illuminated. This sequence will continue upon subsequent vehicle start-ups as long as the malfunction exists. When the malfunction indicator is illuminated, the system may not be able to detect or signal low tire pressure as intended. TPMS malfunctions may occur for a variety of reasons, including the installation of replacement or alternate tires or wheels on the vehicle that prevent the TPMS from functioning properly. Always check the TPMS malfunction telltale after replacing one or more tires or wheels on your vehicle to ensure that the replacement or alternate tires and wheels allow the TPMS to continue to function properly.

Should the warning light illuminate steadily after blinking for approximately one minute, have the system inspected by your nearest SUBARU dealer as soon as possible.

WARNING

If this light does not illuminate briefly after the ignition switch is turned on or the light illuminates steadily after blinking for approximately one minute, you should have your Tire Pressure Monitoring System checked at a SUBARU dealer as soon as possible.

If this light illuminates while driving, never brake suddenly. Instead, perform the following procedure. Otherwise an accident involving serious vehicle damage and serious personal injury could occur.

1) **Keep driving straight ahead while gradually reducing speed.**
2) **Slowly pull off the road to a safe place.**

If this light still illuminates while driving after adjusting the tire pressure, a tire may have significant

– CONTINUED –

damage and a fast leak that causes the tire to lose air rapidly. If you have a flat tire, refer to "Flat Tires" ☞P407.

When a replacement tire is mounted or a wheel rim is replaced without the original pressure sensor/transmitter being transferred, the Low tire pressure warning light will illuminate steadily after blinking for approximately one minute. This indicates the TPMS is unable to monitor all four road wheels. Contact your SUBARU dealer as soon as possible for tire and sensor replacement and/or system resetting. If the light illuminates steadily after blinking for approximately one minute, promptly contact a SUBARU dealer to have the system inspected.

CAUTION

The tire pressure monitoring system is NOT a substitute for manually checking tire pressure. The tire pressure should be checked periodically (at least monthly) using a tire gauge. After any change to tire pressure(s), the tire pressure monitoring system will not re-check tire inflation pressures until the vehicle is first driven more than 25 mph (40 km/h). After adjusting the tire pressures, increase the vehicle speed to at least 25 mph (40 km/h) to start the TPMS re-checking of the tire inflation pressures. If the tire pressures are now above the severe low pressure threshold, the low tire pressure warning light should turn off a few minutes later. Therefore, be sure to install the specified size for the front and rear tires.

■ ABS Warning Light ABS / (ABS)

CAUTION

- **If any of the following conditions occur, we recommend that you have the ABS repaired at the first available opportunity by your SUBARU dealer.**
  - **The warning light does not illuminate when the ignition switch is turned to the "ON" position.**
  - **The warning light illuminates when the ignition switch is turned to the "ON" position, but it does not turn off even after starting the vehicle.**
  - **The warning light illuminates during driving.**
- **When the warning light is on (and brake system warning light is off), the ABS function shuts down; however, the conventional brake system continues to operate normally.**

The ABS warning light illuminates together with the brake system warning light if the EBD system malfunctions. For further details of the EBD system malfunction warning, refer to "Brake System Warning Light" ☞P163.

NOTE

If the warning light behavior is as described in the following conditions, the ABS may be considered normal.

- **The warning light illuminates right after the engine is started but turns off immediately, remaining off.**
- **The warning light remains illuminated after the engine has been started, but it turns off while driving.**
- **The warning light illuminates during driving, but it turns off immediately and remains off.**

When driving with an insufficient battery voltage such as when the engine is jump started, the ABS warning light may illuminate. This is due to the low battery voltage and does not indicate a malfunction. When the battery becomes fully charged, the light will turn off.

■ Brake System Warning Light BRAKE / (!)

WARNING

- **Driving with the brake system warning light on is dangerous. This indicates your brake system may not be working properly. If the light remains illuminated, have the brakes inspected by a SUBARU dealer immediately.**
- **If at all in doubt about whether the brakes are operating properly, do not drive the vehicle. Have your vehicle towed to the nearest SUBARU dealer for repair.**
- **If the brake system warning light illuminates, the electronic parking brake system may be malfunctioning. Immediately stop your vehicle in a safe location, use tire stops under the tires to prevent the vehicle from moving and contact your SUBARU dealer. For details, refer to "Electronic Parking Brake" ☞P340.**

NOTE

- **Even if the brake system warning light illuminates, if the warning light behavior is as described in the following examples, the electronic parking brake system is not malfunctioning.**
  - **The warning light turns off when the electronic parking brake is applied or released.**
  - **The warning light turns off when the ignition switch is turned to the "ON" position again.**
- **The brake system warning light may illuminate immediately after the engine is started. However, it is not malfunctioning if the warning light turns off after the electronic parking brake is released.**
- **The brake system warning light may illuminate after the electronic parking brake is frequently applied and released. However, the electronic parking brake system is not malfunctioning if the light turns off after a short period of time.**
- **When the engine is started while the electronic parking brake is applied/released, the system may judge an abnormal situation and the warning light may illuminate. If the warning light illuminates, turn the ignition switch once to the "LOCK"/"OFF" position and then restart the engine. Then, apply/release the electronic parking brake. If the warning light turns off, the system will be restored.**

This light has the following functions.

▼ Brake fluid level warning

This light illuminates when the brake fluid level has dropped to near the "MIN" level of the brake fluid reservoir with the ignition switch in the "ON" position and with the parking brake fully released.

If the brake system warning light should illuminate while driving (with the parking brake fully released and with the ignition switch positioned in "ON"), it could be an indication of leaking of brake fluid or worn brake pads. If this occurs, immediately stop the vehicle at the nearest safe place and check the brake fluid level. If the fluid level is below the "MIN" mark in the reservoir, do not drive the vehicle. Have the vehicle towed to the nearest SUBARU dealer for repair.

– CONTINUED –

▼ **Electronic Brake Force Distribution (EBD) system warning**

If the warning light remains on even though the parking brake is released, the brake fluid level may be low or there could be a problem with the EBD system. Park the vehicle in a safe place immediately and contact a SUBARU dealer.

▼ **Electronic brake booster warning**

The brake system warning light illuminates when the electronic brake booster is malfunctioning. In addition, the warning messages "Brake System" and "Check Owner's Manual" are displayed alternately on the combination meter display (color LCD). If the warning light illuminates, promptly park in a safe location as soon as possible and contact your SUBARU dealer.

▼ **Electronic parking brake system warning**

The brake system warning light illuminates when the electronic parking brake system is malfunctioning. If the warning light illuminates, promptly park in a safe location as soon as possible and contact your SUBARU dealer.

The brake system warning light remains illuminated when the parking brake cannot be released even if the parking brake switch is pushed. For details, refer to "Electronic Parking Brake" ☞P340.

▽ **Frequent operation warning**

The brake system warning light illuminates and a chirp sound will be heard if the parking brake switch is operated too frequently. In this case, the operation of the parking brake switch is restricted to protect the electronic parking brake system.

■ Electronic Parking Brake Indicator Light PARK / (P)

▼ **Parking brake indicator**

The light illuminates with the parking brake applied while the ignition switch is in the "ACC" or "ON" position. It turns off when the parking brake is fully released.

▼ **Electronic parking brake system warning**

⚠ WARNING

- **When you release the electronic parking brake while the engine is running, the electronic parking brake indicator light will turn off. However, if the light still illuminates, stop the vehicle in a safe location immediately and have the system inspected by a SUBARU dealer.**
- **If at all in doubt about whether the brakes are operating properly, do not drive the vehicle. Have your vehicle towed to the nearest SUBARU dealer for repair.**
- **If the electronic parking brake indicator light flashes, the electronic parking brake system may be malfunctioning. Immediately stop your vehicle in a safe location, use tire stops under the tires to prevent the vehicle from moving and contact your SUBARU dealer. For details, refer to "Electronic Parking Brake" ☞P340.**

NOTE

- **When the ignition switch is turned to the "LOCK"/"OFF" position with the electronic parking brake applied, the electronic parking brake indicator light remains illuminated for approximately 30 seconds and then turns off.**
- **When the electronic parking brake switch is pulled to apply the electronic parking brake while the ignition switch is in the "LOCK"/"OFF" position, the electronic parking brake indicator light illuminates, remains**

illuminated for approximately 30 seconds and then turns off.

- **Even if the electronic parking brake indicator light flashes, if the warning light behavior is as described in the following examples, the electronic parking brake system is not malfunctioning.**
  - **The indicator light turns off when the electronic parking brake is released.**
- **The electronic parking brake indicator light may flash immediately after the engine is started. However, it is not malfunctioning if the indicator light turns off after the electronic parking brake is released.**
- **The electronic parking brake indicator light may flash after the electronic parking brake is frequently applied and released. However, the electronic parking brake system is not malfunctioning if the light turns off after a short period of time.**

The electronic parking brake indicator light flashes when the electronic parking brake system is malfunctioning. If the indicator light flashes, promptly park in a safe location as soon as possible and contact your SUBARU dealer.

The electronic parking brake indicator light remains illuminated when the parking brake cannot be released even if the parking brake switch is pushed. For details, refer to "Electronic Parking Brake" ☞P340.

▽ **Parking brake apply inhibit warning**

The electronic parking brake indicator light flashes for 10 seconds and a chirp sound will be heard if the parking brake switch is operated when the parking brake cannot be applied.

▽ **Frequent operation warning**

The electronic parking brake indicator light flashes for 10 seconds and a chirp sound will be heard if the parking brake switch is operated too frequently. In this case, the operation of the parking brake switch is restricted to protect the electronic parking brake system.

NOTE

Wait until the indicator light turns off.

■ Auto Vehicle Hold Indicator Light

CAUTION

If the Auto Vehicle Hold indicator light does not illuminate even when "Auto Vehicle Hold (AVH)" is touched to activate the Auto Vehicle Hold function, the electronic parking brake system may be malfunctioning.

This indicator illuminates when the Auto Vehicle Hold is activated. This indicator blinks while the vehicle is stopped by the Auto Vehicle Hold function. For details, refer to "Auto Vehicle Hold function" ☞P343.

■ Low Fuel Warning Light

The low fuel warning light illuminates when the tank is nearly empty approximately 2.3 US gal (9.0 liters, 1.9 Imp gal). It only operates when the ignition switch is in the "ON" position.

CAUTION

Promptly put fuel in the tank whenever the low fuel warning light illuminates. Engine misfires as a result of an empty tank could cause damage to the engine.

– CONTINUED –

■ Door Open Indicator Light

When any of the doors or the rear gate is not fully closed, the door open indicator light appears. This function is effective even if the ignition switch is in the “LOCK”/ “OFF” or “ACC” position or the key is removed from the ignition switch (models without “keyless access with push-button start system”).

The open door is indicated by the corresponding part of the door open indicator light.

Always make sure this indicator does not appear before you start to drive.

■ Engine Hood Open Warning Light

The warning light illuminates if the engine hood is not fully closed. This function is effective even if the ignition switch is in the “OFF” or “ACC” position.

Always make sure this light is not illuminated before you start to drive.

■ Windshield Washer Fluid Warning Light

This light appears when the fluid level in the windshield washer fluid tank decreases to the lower limit (approximately 0.6 US qt (0.6 liters, 0.5 Imp qt)).

■ All-Wheel Drive Warning Light

WARNING

Continued driving with the AWD warning light flashing can lead to powertrain damage. If the AWD warning light flashes, promptly park in a safe location and then check whether all four tires are the same diameter and whether any of the tires has a puncture or has lost air pressure for some other reason.

This light flashes if the vehicle is driven with tires of different diameters fitted on its wheels or with the air pressure excessively low in any of its tires.

■ Power Steering Warning Light

While the engine is running, this warning light illuminates when a malfunction has been detected in the electric power steering system.

CAUTION

When the power steering warning light is illuminated, there may be more resistance when the steering wheel is operated. Drive carefully to the nearest SUBARU dealer and have the vehicle inspected immediately.

NOTE

If the steering wheel is operated in the following ways, the power steering control system may temporarily limit the power assist in order to prevent the system components, such as the control computer and drive motor, from overheating.

- **The steering wheel is operated frequently and turned sharply while the vehicle is maneuvered at extremely low speeds, such as while frequently turning the steering wheel during parallel parking.**
- **The steering wheel remains in the fully turned position for a long period of time.**

At this time, there will be more resistance when steering. However, this is not a malfunction. Normal steering force will be restored after the steering

wheel is not operated for a while and the power steering control system has an opportunity to cool down. However, if the power steering is operated in a non-standard way which causes power assist limitation to occur too frequently, that may result in a malfunction of the power steering control system.

■ Vehicle Dynamics Control Warning Light/Vehicle Dynamics Control Operation Indicator Light

▼ Vehicle Dynamics Control warning light

CAUTION

The Vehicle Dynamics Control system provides its ABS control through the electrical circuit of the ABS. Accordingly, if the ABS is inoperative, the Vehicle Dynamics Control system becomes unable to provide ABS control. As a result, the Vehicle Dynamics Control system becomes inoperative, causing the warning light to illuminate. Although both the Vehicle Dynamics Control and ABS are inoperative in this case, the ordinary functions of the brake system are still available. You will be safe while driving in this condition, but drive carefully and have your vehicle checked at a SUBARU dealer as soon as possible.

NOTE

- **If the electrical circuit of the Vehicle Dynamics Control system itself malfunctions, the warning light only illuminates. At this time, the ABS (Anti-lock Brake System) remains fully operational.**
- **The warning light illuminates when the electronic control system of the ABS/Vehicle Dynamics Control system malfunctions.**
- **The Vehicle Dynamics Control warning light, ABS warning light, and brake system warning light illuminate simultaneously if the EBD system malfunctions. For further details of the EBD system malfunction warning, refer to "Electronic Brake Force Distribution (EBD) system warning" ☞P164.**

The Vehicle Dynamics Control system is probably inoperative under any of the following conditions. Have your vehicle checked at a SUBARU dealer immediately.

- The warning light does not illuminate when the ignition switch is turned to the "ON" position.
- The warning light illuminates while the vehicle is running.

NOTE

If the warning light behavior is as described in the following examples, the Vehicle Dynamics Control system may be considered normal.

- **The warning light illuminates right after the engine is started but turns off immediately and remains off.**
- **The warning light illuminates after the engine has started and turns off while the vehicle is subsequently being driven.**
- **The warning light illuminates during driving, but turns off immediately and remains off.**

▼ Vehicle Dynamics Control operation indicator light

The indicator light flashes during activation of the skid suppression function and during activation of the traction control function.

NOTE

- **The light may remain illuminated for a short period of time after the**

– CONTINUED –

engine has been started, especially in cold weather. This does not indicate the existence of a problem. The light should turn off as soon as the engine has warmed up.

- **The indicator light illuminates when the engine has developed a problem and the CHECK ENGINE warning light/malfunction indicator light is on.**

The Vehicle Dynamics Control system is probably malfunctioning under the following condition. Have your vehicle checked at a SUBARU dealer as soon as possible.

- The light does not turn off even after the lapse of several minutes (the engine has warmed up) after the engine has started.

■ Vehicle Dynamics Control OFF Indicator Light

The light illuminates when “Vehicle Dynamics Control” is selected to deactivate the Vehicle Dynamics Control system.

The Vehicle Dynamics Control system is probably malfunctioning under any of the following conditions. We recommend that you have your vehicle checked at a SUBARU dealer immediately.

- The light does not illuminate while the system check.
- The light does not turn off even after a period of approximately 2 seconds after the ignition switch has been turned to the “ON” position.

■ Warning Chimes and Warning Indicator of the Keyless Access with Push-Button Start System (If Equipped)

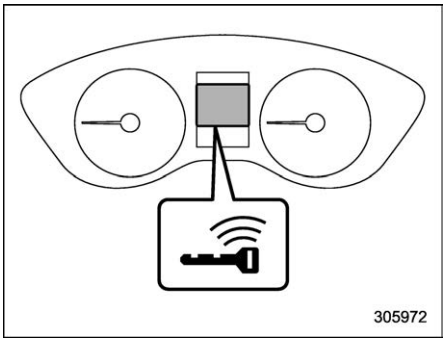

Access key warning indicator

The keyless access with push-button start system is equipped with a warning chime and the access key warning indicator in order to minimize improper operations and help protect your vehicle from theft.

When the warning chime sounds and/or the warning indicator appears, take the appropriate action.

You cannot turn the warning chimes off. However, the volume setting of the outside warning chime can be changed by a SUBARU dealer. Consult your SUBARU dealer for details.

WARNING

Never drive the vehicle if the indicator on the push-button ignition switch is flashing in green when starting the engine. This indicates the status that the steering wheel is not released and could result in an accident involving serious injury or death.

CAUTION

- **When starting the engine again after the operation indicator on the push-button ignition switch flashes in green, if the operation indicator is still flashing in green, there could be a steering lock malfunction. Contact your SUBARU dealer as soon as possible.**

- When the operation indicator on the push-button ignition switch flashes in orange, contact a SUBARU dealer immediately.

NOTE

- Even when the access key fob is within the operating ranges inside the vehicle, the access key warning for engine start may be provided depending on the status of the access key fob and the environmental conditions.
- When the access key fob is taken out of the vehicle through an open window, the access key takeout warning or passenger access key takeout warning will not be provided.

▼ List of warnings

CAUTION

When any of the following warnings occurs even if the access key warning indicator does not appear, take the appropriate action.

– CONTINUED –

Inside warning chime	Outside warning chime	Operation indicator on push-button ignition switch	Status	Action
Ding, ding ... (intermittent)	—	—	The driver's door is opened while the push-button ignition switch is "ACC" position and the select lever is in the "P" position.	Switch the push-button ignition switch to "OFF", or close the driver's door. When exiting the vehicle, be sure to switch the push-button ignition switch to "OFF".
			The push-button ignition switch is switched to "OFF" while the driver's door is open.	Close the driver's door.
Ding	Short beep (2 seconds)	—	**Lockout warning:** The doors are locked by following methods when an access key fob is left in the car. ● The door is closed when the lock lever of the door is in the lock position. ● The door is closed when the power door locking switch is in the lock position.	Take out the access key fob from the vehicle, and lock the doors. The doors cannot be locked while the access key fob is inside the vehicle. A chirp sound will be heard, and all doors will be unlocked.
—	Short beep (2 seconds)	—	**Access key lock-in warning:** The door lock sensor is touched while the push-button ignition switch is "OFF" and the access key fob is inside the vehicle.	Take out the access key fob from the vehicle, and lock the doors. If the access key fob is inside the vehicle, the doors cannot be locked.
—	Beep, beep, beep, beep, beep (5 times)	—	**Door ajar warning:** The door lock sensor is touched while the ignition switch is in the "OFF" position and one of the doors including the rear gate is opened.	Close the doors securely and lock them. If one of the doors including the rear gate is opened, the doors cannot be locked.
Ding	Long beep (60 seconds max.)	—	**Power warning:** The door lock sensor is touched while you are carrying the access key fob, the push-button ignition switch is in a position other than "OFF" and the select lever is in the "P" position.	Return the access key fob inside the vehicle, or switch the push-button ignition switch to "OFF". If the push-button ignition switch is not switched to "OFF", the doors cannot be locked.
Ding, ding ... (7 seconds)	—	—	**Access key warning:** The vehicle is driven while the access key fob is not inside the vehicle.	Carry the access key fob, and drive the vehicle.

Inside warning chime	Outside warning chime	Operation indicator on push-button ignition switch	Status	Action
Ding	—	—	**Access key warning for engine start:** The push-button ignition switch is pressed while the access key fob is not inside the vehicle.	Carry the access key fob, and press the push-button ignition switch.
Ding	Beep, beep, beep (3 times)	—	**Access key takeout warning:** The driver exits the vehicle with the access key fob and closes the driver's door while the push-button ignition switch is in a position other than "OFF" and the select lever is in a position other than the "P" position.	Switch the push-button ignition switch to "OFF", and get out of the vehicle.
Ding	Beep, beep, beep (3 times)	—	**Passenger access key takeout warning:** A fellow passenger exits the vehicle with the access key fob and closes a door other than the driver's door while the push-button ignition switch is in a position other than "OFF".	Return the access key fob to inside the vehicle, or switch the push-button ignition switch to "OFF".
Long beep (continuous)	Long beep (continuous)	—	**Access key takeout without "P" position warning:** The driver exits the vehicle with the access key fob and closes the driver's door while the push-button ignition switch is in a position other than "OFF" and the select lever is in a position other than the "P" position.	Shift the select lever to the "P" position, switch the push-button ignition switch to "OFF" and exit the vehicle.
Long beep (continuous)	—	—	**Select lever position warning:** ● Case 1: The engine is turned off by pressing the push-button ignition switch while the select lever is in a position other than the "P" position. ● Case 2: The driver's door is opened while the push-button ignition switch is in a position other than "OFF" and the select lever is in a position other than the "P" position.	● Case 1: Start the engine, shift the select lever to the "P" position, switch the push-button ignition switch to "OFF" and exit the vehicle. ● Case 2: Shift the select lever to the "P" position, switch the push-button ignition switch to "OFF" and exit the vehicle.

– CONTINUED –

Inside warning chime	Outside warning chime	Operation indicator on push-button ignition switch	Status	Action
Ding	—	—	The battery of the access key fob is low.	Replace the battery of the access key fob.
Ding	—	Flashes in green (15 seconds max.)	**Steering lock warning:** The engine start procedure is performed, but the steering is still locked.	While turning the steering wheel right and left lightly, depress the brake pedal and press the push-button ignition switch.
Ding	—	Flashes in orange	**System malfunction warning:** A malfunction is detected in the power system or steering lock.	Contact a SUBARU dealer immediately and have the vehicle inspected.

■ Security Indicator Light

This indicator light shows the status of the alarm system. It also indicates operation of the immobilizer system.

▼ Alarm system

It blinks to show the driver the operational status of the alarm system. For detailed information, refer to “Alarm System” ☞P131.

▼ Immobilizer system

The security indicator light starts blinking in the following conditions.

For models with “keyless access with push-button start system”:

- Immediately after the push-button ignition switch is turned to the “OFF” position.
- Immediately after the driver’s door is opened or closed when all of the following conditions are met.
  - The push-button ignition switch is in the “ON” or “ACC” position.
  - The engine is not running.

In the event that an unauthorized key is used (for example, the key is unregistered or the ID code does not match), the power is not switched to “ON” and the security indicator light continues blinking.

For models without “keyless access with push-button start system”:

- Approximately 60 seconds after the ignition switch is turned from the “ON” position to the “ACC” or “LOCK” position.
- Immediately after the key is pulled out.

If the indicator light does not blink in the above conditions, it may indicate that immobilizer system may be malfunctioning. Contact your nearest SUBARU dealer immediately.

In the event that an unauthorized key (for example, an unauthorized duplicate) is used, the security indicator light illuminates. For details about the immobilizer system, refer to “Immobilizer” ☞P121.

NOTE

- **The security indicator light remains off in the following conditions. It means that the matching of the ID code is completed and the immobilizer system is deactivated, and it does not indicate a malfunction.**

  Models with “keyless access with push-button start system”:
  - **While the engine is running**
  - **The push-button ignition switch has been turned to the “ON” or “ACC” position and the driver’s door has not been opened or closed**

  Models without “keyless access with push-button start system”:
  - **While the engine is running**
  - **For approximately 60 seconds after the ignition switch is turned from the “ON” position to the “ACC” or “LOCK” position**
  - **When the ignition switch is in the “ON” position**

- **Even if a malfunction occurs, such as the security indicator light flashes irregularly, it will not affect the functionality of the immobilizer system.**

– CONTINUED –

■ SI-DRIVE Indicator (If Equipped)

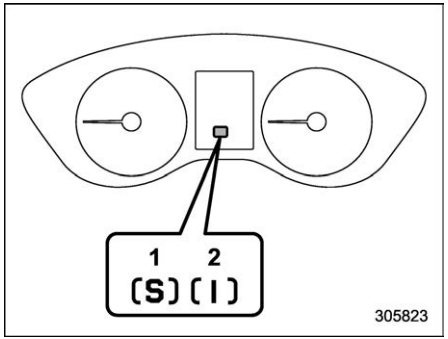

SI-DRIVE indicator

1 Sport (S) mode
2 Intelligent (I) mode

This light indicates the current SI-DRIVE mode.

For details of SI-DRIVE mode, refer to "SI-DRIVE" ☞P330.

■ Select Lever/Gear Position Indicator

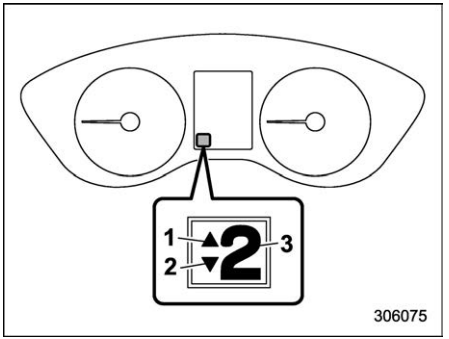

1 Upshift indicator
2 Downshift indicator
3 Select lever/gear position indicator

The select lever position is displayed on the indicator.

When the manual mode is selected, the gear position indicator, which shows the current gear selection, and the available up shift/downshift indicator light up. Refer to "Selection of Manual Mode" ☞P328.

■ Turn Signal Indicator Lights

These lights show the operation of the turn signal or lane change signal.

If the indicator lights do not blink or blink rapidly, the turn signal bulb may be burned out. Replace the bulb as soon as possible. Refer to "Replacing Bulbs" ☞P481.

■ High Beam Indicator Light

This light shows that the headlights are in the high beam mode.

This indicator light also illuminates when operating the headlight flasher.

■ High Beam Assist Indicator

This indicator appears when the high beam assist function is activated. For details about the high beam assist function, refer to "High Beam Assist Function" ☞P233.

■ Automatic Headlight Beam Leveler Warning Light

This light illuminates when the automatic headlight beam leveler does not operate normally.

If this light illuminates while driving, have your vehicle inspected at your SUBARU dealer.

■ LED Headlight Warning Light

This light illuminates if the LED headlights malfunction. Have your vehicle inspected at a SUBARU dealer as soon as possible.

■ Steering Responsive Headlight OFF Indicator Light

SRH OFF

This light illuminates when the Steering Responsive Headlight function is off. For details about the on/off setting, refer to "Car settings" ☞P201.

■ Steering Responsive Headlight Warning Light

SRH

The light illuminates when a malfunction occurs in the Steering Responsive Headlight. Refer to "Steering Responsive Headlight (SRH)" ☞P237.

■ Headlight Indicator Light

This indicator light illuminates under the following conditions.

- The light switch is turned to the "≡DOE≡" or "≡D" position.
- The light switch is in the "AUTO" position and the headlights illuminate automatically.

■ Front Fog Light Indicator Light (If Equipped)

This indicator light illuminates while the front fog lights are illuminated.

■ Auto Start Stop Warning Light (Yellow)

CAUTION

If the Auto Start Stop warning light is illuminated in yellow, there may be a malfunction in the Auto Start Stop system. When starting the engine again after the Auto Start Stop warning light illuminates, if it is still illuminating, we recommend that you have your vehicle inspected at a SUBARU dealer as soon as possible.

The Auto Start Stop warning light will illuminate in yellow if you open the engine hood when the engine has been temporarily stopped by the Auto Start Stop system.

In this case, to ensure safety, the engine will not be automatically restarted, even if you release the brake pedal. Use normal operation to restart the engine.

■ Auto Start Stop OFF Indicator Light

A OFF

This light will illuminate when "Auto Start Stop" is touched to prevent the Auto Start Stop system from operating. It will turn off when "Auto Start Stop" is touched once more to enable operation of the Auto Start Stop system. For details about the setting, refer to "Car settings" ☞P201 (11.6-inch display models) or "Setting of the lower display" ☞P216 (dual 7.0-inch display models).

CAUTION

If the Auto Start Stop OFF indicator light does not illuminate when "Auto Start Stop" is touched, we recommend that you contact a SUBARU dealer for an inspection as soon as possible.

■ Auto Start Stop Indicator Light (Green)

This indicator light illuminates when the engine has been temporarily stopped by the Auto Start Stop system. It will turn off when the engine is restarted.

– CONTINUED –

■ Auto Start Stop No Activity Detected Indicator Light

When a vehicle is stopped, the indicator light illuminates when the operating condition of the Auto Start Stop system is not met. The light will turn off when the vehicle starts driving. Refer to “Non-operational conditions” ☞P350.

■ BSD/RCTA Warning Indicator (If Equipped)

This warning indicator appears on the combination meter display (color LCD) when the BSD (Blind Spot Detection) or RCTA (Rear Cross Traffic Alert) is malfunctioning for any reason. For further details, refer to “BSD/RCTA Warning Indicator” ☞P364. If this indicator remains displayed, have your vehicle inspected by your SUBARU dealer as soon as possible.

■ BSD/RCTA OFF Indicator (If Equipped)

This indicator appears on the combination meter display (color LCD) when “Rear Vehicle Detection (BSD/RCTA)” is touched to deactivate the BSD (Blind Spot Detection) and RCTA (Rear Cross Traffic Alert), or when the BSD/RCTA is suspended temporarily. For details, refer to “BSD/RCTA OFF Indicator” ☞P363.

■ Icy Road Surface Warning Indicator

When the outside temperature is 37°F (3°C) or less, the icy road surface warning indicator will illuminate to inform the driver that the road surface may be frozen.

NOTE

- **The outside temperature indicator shows the temperature in the area around the sensor. However, the temperature may not be indicated correctly or the update may be delayed in the following conditions.**
  - **While parking or driving at low speeds**
  - **When the outside temperature changes suddenly (example: when going in and out of an underground parking area or when passing through a tunnel)**
  - **When starting the engine after being parked for a certain period of time**
- **The icy road surface warning indicator should be treated only as a guide. Be sure to check the condition of the road surface before driving.**
- **Once the icy road surface warning indicator appears, it will not disappear unless the outside temperature has increased to 41°F (5°C) or higher.**

■ RAB Warning Indicator (If Equipped)

This indicator illuminates if the Reverse Automatic Braking (RAB) system malfunctions. Refer to “Reverse Automatic Braking (RAB) System” ☞P367.

■ RAB OFF Indicator (If Equipped)

This indicator illuminates when the Reverse Automatic Braking (RAB) system is turned OFF, or when the Reverse Automatic Braking (RAB) system is suspended temporarily. Refer to “Reverse Automatic Braking (RAB) System” ☞P367.

■ Sonar Audible Alarm OFF Indicator (If Equipped)

This indicator illuminates when the Sonar Audible Alarm is turned OFF. For the setting procedure, refer to “Car settings” ☞P201.

■ Driver Monitoring System Operation Indicator Light (Green) (If Equipped)

This indicator illuminates when the Driver Monitoring System is activated. Refer to “Driver Monitoring System operation indicator light (green)” ☞P386.

■ Driver Monitoring System Warning Light (Yellow) (If Equipped)

This warning light illuminates if the Driver Monitoring System malfunctions. We recommend that you have your vehicle inspected at a SUBARU dealer as soon as possible. Refer to “Driver Monitoring System warning light (yellow)” ☞P386.

■ Driver Monitoring System OFF Indicator Light (If Equipped)

This indicator illuminates when “Driver Monitoring System” is touched to deactivate the Driver Monitoring System. Refer to “Driver Monitoring System OFF indicator light” ☞P386.

■ Driver Monitoring System Temporary Stop Indicator Light (If Equipped)

This indicator illuminates when the Driver Monitoring System is temporarily stopped. Refer to “Driver Monitoring System temporary stop indicator light” ☞P386.

NOTE

The Driver Monitoring System stops temporarily in the following circumstances.

- **The temperature of the Driver Monitoring System unit is high.**

3-7. Combination Meter Display (Color LCD)

⚠ WARNING

Always pay adequate attention to safe driving when operating the combination meter display (color LCD) while the vehicle is in motion. When operation of the combination meter display (color LCD) interferes with your ability to concentrate on driving, stop the vehicle before performing operations on the screen. Also, do not concentrate on the display while driving. Doing so may cause you to look away from the road and could result in an accident.

Various information will be shown on the combination meter display (color LCD). Also, a warning message will appear on the display if a malfunction is detected. In addition, several settings for the displayed content can be performed.

– CONTINUED –

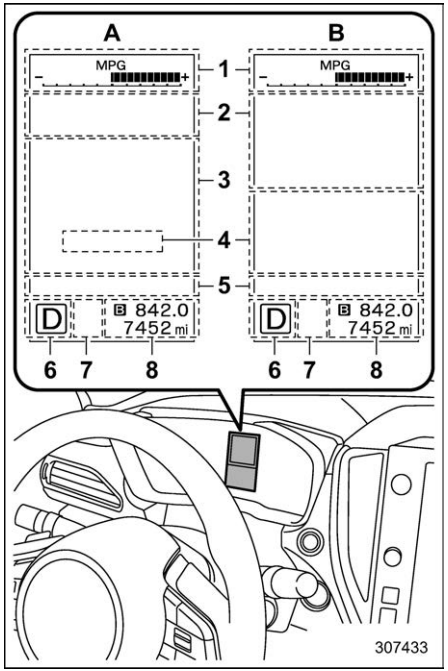

Combination meter display (color LCD)

1 Meter information screen (Refer to “Meter Information Screen” ☞P179.)
2 Warning screen (Refer to “Warning Screen” ☞P179.)/Basic screen (Refer to “Basic Screens” ☞P182.)
3 EyeSight screen*
4 Digital speed screen (Refer to “Digital Speed Screen” ☞P185.)
5 Telltale screen (Refer to “Telltale Screen” ☞P181.)
6 Select lever/gear position indicator (Refer to “Select Lever/Gear Position Indicator” ☞P174.)
7 SI-DRIVE indicator (if equipped) (Refer to “SI-DRIVE Indicator” ☞P174.)
8 Odometer (Refer to “Odometer” ☞P151.)/Double trip meter (Refer to “Double Trip Meter” ☞P151.)

A: Activating the EyeSight system
B: Deactivating the EyeSight system

*: For details, refer to the separate EyeSight Owner’s Manual.

■ Basic Operation

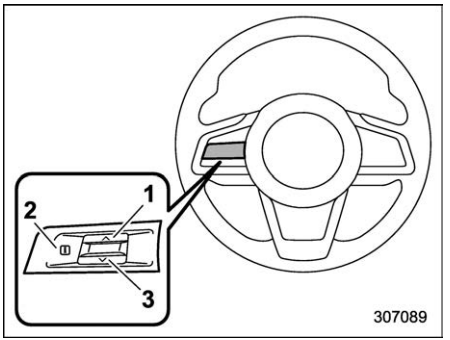

Control switches

1 ∧
2 ⓘ
3 ∨

By operating ∧ or ∨ of the control switches, the screens can be changed.

If there are some useful messages, such as vehicle information, warning information, etc., they will interrupt the current screen, and appear on the display accompanied by a beep. If such a screen is displayed, take proper action according to the message shown on the screen.

The warning screen will return to the original screen after a few seconds. While the ⓘ information reminder is shown on the display, it may be possible to display

the warning screen again. To recall the message marked with [i] on the display, press the [i] switch on the steering wheel.

■ Welcome Screen (Opening Animation) and Good-Bye (Ending Animation) Screen

Welcome screen and Good-bye screen are motion graphic displayed on the combination meter display and center information display upon entering and exiting the vehicle.

When the driver's door is opened and closed after unlocking the door, the welcome screen (opening animation) will appear on the combination meter display (color LCD) for approximately 20 seconds.

When the ignition switch is turned to the "LOCK"/"OFF" position, the combination meter display (color LCD) gradually turns off by showing good-bye screen (ending animation).

NOTE

- **The welcome screen and the good-bye screen may differ in the actual words and appearance.**
- **The basic screen will be shown when the ignition switch is turned to the "ON" position while the welcome screen is displayed.**
- **Once the welcome screen appears, it takes a certain period of time to display it again.**
- **If the ignition switch is operated after unlocking the driver's door, the welcome screen will not appear even when the driver's door is opened and closed.**
- **The welcome screen will disappear when you lock the driver's door by using the remote keyless entry system (all models) or the keyless access function (if equipped) while the welcome screen is displayed.**
- **The welcome screen including the audio/navigation unit can be set to on or off.**
- **The welcome screen can be set to on or off. For details, refer to "General settings" ☞P196 (11.6-inch display models) or "General settings" ☞P213 (dual 7.0-inch display models).**
- **The good-bye screen can be set to on or off. For details, refer to "General settings" ☞P196 (11.6-inch display models) or "General settings" ☞P213 (dual 7.0-inch display models).**

■ Warning Screen

Example of warning

If there is a warning message or a maintenance notification, it will appear on combination meter display (color LCD). Take the appropriate actions based on the messages indicated.

■ Meter Information Screen

The meter information screen can be changed. For details, refer to "General settings" ☞P196 (11.6-inch display models) or "General settings" ☞P213 (dual 7.0-inch display models).

– CONTINUED –

▼ **ECO gauge**

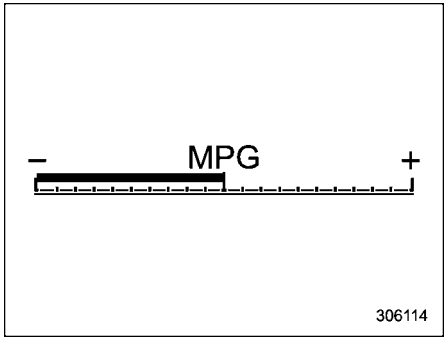

The ECO gauge shows the difference between the average rate of fuel consumption since the trip meter was last reset and the current rate of fuel consumption.

The ECO gauge indicates the current fuel efficiency as shown in the following chart.

Displayed unit	Needle position	
	"+" side	"–" side
MPG	Better	Poorer
l/100km	Poorer	Better

NOTE

- **The ECO gauge shows only an approximate indication.**
- **After resetting the trip meter, the average rate of fuel consumption is not shown until driving 0.6 miles (1 km). Until that time, the ECO gauge does not operate.**

▼ **Clock and temperature**

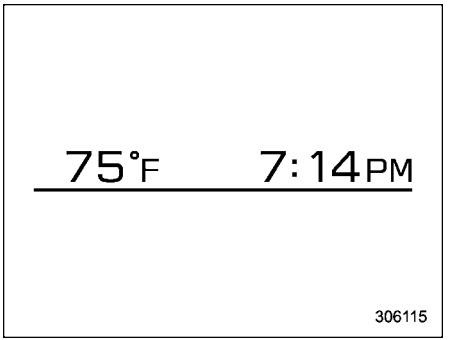

This screen displays the clock and outside temperature.

NOTE

- **The clock can be displayed in either 12-hour display or 24-hour display. For details, refer to "Clock" ☞P225.**
- **The outside temperature indicator shows the temperature in the area around the sensor. However, the temperature may not be indicated correctly or the update may be delayed in the following conditions.**
  - **While parking or driving at low speeds**
  - **When the outside temperature changes suddenly (example: when going in and out of an underground parking area or when passing through a tunnel)**
  - **When starting the engine after being parked for a certain period of time**
- **You can set the temperature units to be displayed in Fahrenheit (°F) or Celsius (°C). For details, refer to "Car settings" ☞P201 (11.6-inch display models) or "Vehicle setting icons" ☞P219 (dual 7.0-inch display models).**

▼ **Compass (if equipped)**

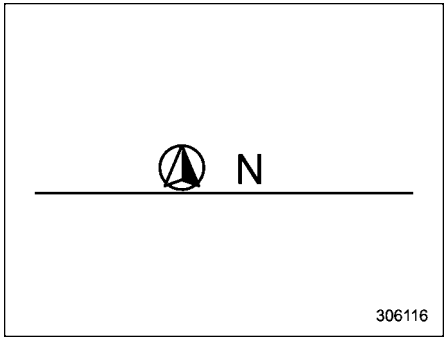

The direction of the vehicle is displayed.

▼ **Driving range on remaining fuel**

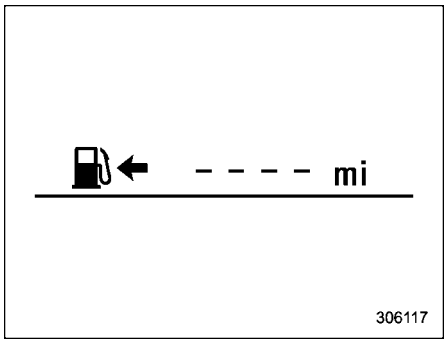

NOTE

The driving range on the remaining fuel is only a guide. The indicated value may differ from the actual driving range on the remaining fuel, so you must immediately fill the tank when the low fuel warning light illuminates.

■ Telltale Screen

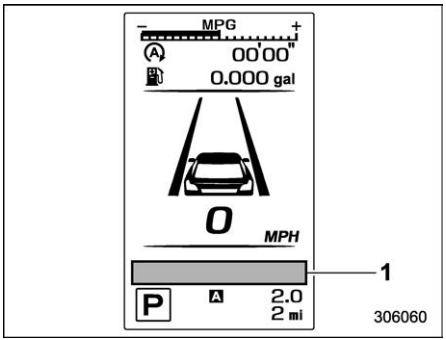

1 Telltale screen

When the corresponding situation occurs, the following telltales will be displayed on the telltale screen.

NOTE

- **When there is warning information to display, it will be displayed in five warning indicators, starting on the left in ascending order of severity.**
- **If there are 6 or more warning messages to display, the indicators will be displayed in sequential order.**

Mark	Name	Page
	Door open indicator light	166
	Engine hood open warning light	166
	LED headlight warning light	175
	High beam assist indicator	174
SRH OFF	Steering Responsive Headlight OFF indicator light	175
SRH	Steering Responsive Headlight warning light	175
	Engine low oil level warning light	160
AT OIL TEMP	AT OIL TEMP warning light	160
AWD	All-Wheel Drive warning light	166

– CONTINUED –

Mark	Name	Page
RAB	RAB warning indicator (if equipped)	176
RAB OFF	RAB OFF indicator (if equipped)	176
	Sonar Audible Alarm OFF indicator (if equipped)	176
	BSD/RCTA warning indicator (if equipped)	176
OFF	BSD/RCTA OFF indicator (if equipped)	176
	Auto Start Stop warning light (yellow)	175
	Auto Start Stop indicator light (green)	175
OFF	Auto Start Stop OFF indicator light	175
	Auto Start Stop No Activity Detected indicator light	176
	Automatic headlight beam leveler warning light	174
	Windshield washer fluid warning light	166

Mark	Name	Page
	Driver Monitoring System operation indicator light (green) (if equipped)	177
	Driver Monitoring System warning light (yellow) (if equipped)	177
OFF	Driver Monitoring System OFF indicator light (if equipped)	177
	Driver Monitoring System temporary stop indicator light (if equipped)	177
	Icy road surface warning light	176

■ Basic Screens

By operating the ∧ or ∨ switch on the steering wheel, you can change the screen that is always displayed.

Average fuel consumption screen:

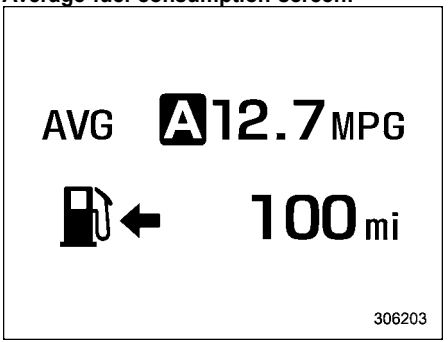

AVG: Average fuel consumption
⛽←: Driving range on remaining fuel

This screen displays the average rate of fuel consumption since the trip meter was last reset.

NOTE

The driving range on the remaining fuel is only a guide. The indicated value may differ from the actual driving range on the remaining fuel, so you must immediately fill the tank when the low fuel warning light illuminates.

Current fuel consumption screen:

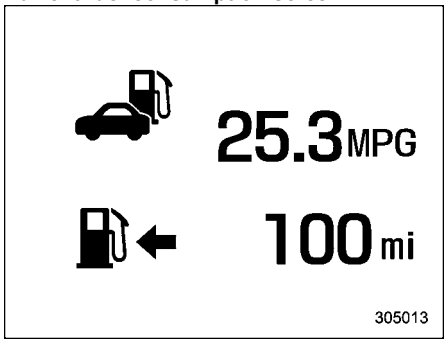

: Current fuel consumption
: Driving range on remaining fuel

NOTE

The driving range on the remaining fuel is only a guide. The indicated value may differ from the actual driving range on the remaining fuel, so you must immediately fill the tank when the low fuel warning light illuminates.

Driving information screen:

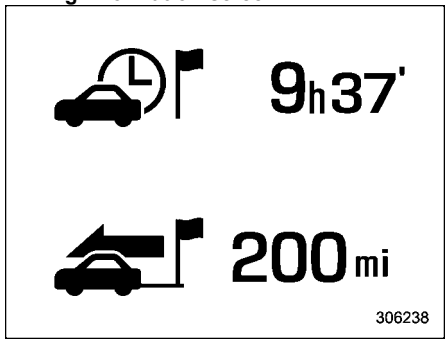

: Journey time
: Journey distance

This screen displays the journey time (the time that has elapsed since the ignition switch was turned to the “ON” position) and journey distance (the distance that has been driven since the ignition switch was turned to the “ON” position).

Auto Start Stop screen:

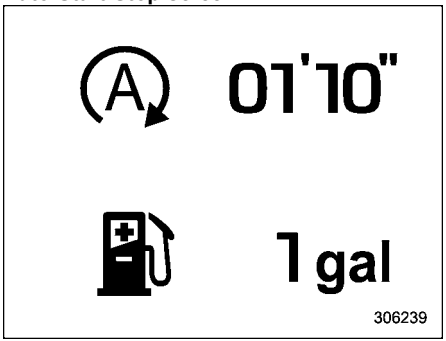

: The total amount of time that the engine was stopped by means of the Auto Start Stop system
: The total amount of fuel saved due to the engine being stopped by the Auto Start Stop system

The indicated values are calculated from the most recent reset of the currently displayed trip meter to the current time. The indication ranges are as follows.

- Total amount of time: from 00′00″ to 9999h59′59″
- Total amount of fuel saved: from 0 gal to 9999.999 gal

NOTE

- **When the trip meter is reset, the corresponding accumulated time and the amount of fuel saving are**

– CONTINUED –

also reset.

- **The time spent with the engine stopped by means of the Auto Start Stop system is also added to the journey time.**

TPMS screen (U.S.-spec. models):

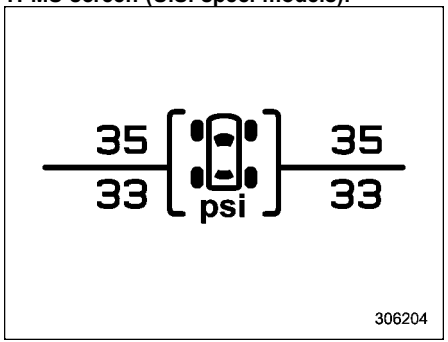

This screen displays each tire pressure.

When a tire is deflated, the deflated tire and the tire pressure will be displayed on the screen in yellow.

NOTE

- **The tire pressure values are displayed several minutes after driving.**
- **You can set the tire pressure units. For details about setting the units, refer to "General settings" ☞P196 (11.6-inch display models) or "General settings" ☞P213 (dual 7.0-inch display models).**
- **Once the tire pressure monitoring system detects the low tire pressure, the tire pressure values will display in yellow until the system detects the normal tire pressure.**
- **Immediately adjust the tire pressure when the warning light illuminates. When the tire pressure monitoring system detects the adjusted tire pressure, the warning light will turn off and the tire pressure values will turn to white.**
- **For information about the specified value of the air pressure, refer to "Tires" ☞P495.**

Compass screen (if equipped):

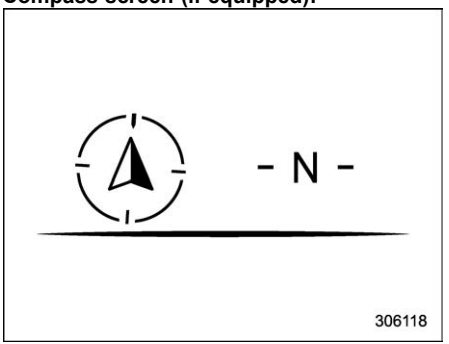

The direction of the vehicle is displayed.

Navigation screen (if equipped):

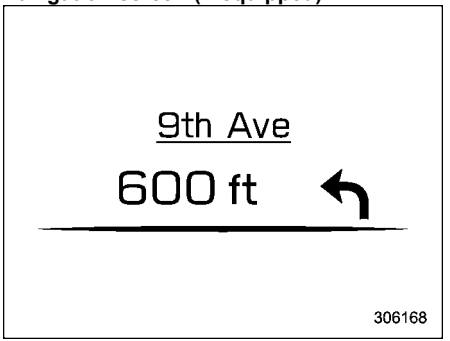

When the route guidance is set in the navigation system, this item shows the navigation route information. For details about the navigation system, refer to the separate navigation/audio Owner's Manual.

Audio screen:

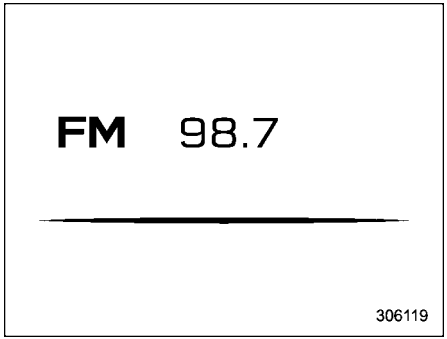

The audio screen shows the status of audio information. For details about the audio system, refer to the separate navigation/audio Owner's Manual.

Clock and outside temperature screen:

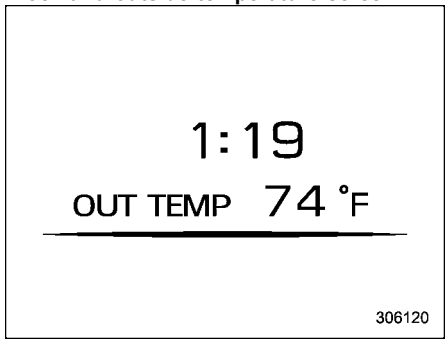

This screen displays the clock and outside temperature. For details about clock setting, refer to "Clock" ☞P225.

NOTE

- **The outside temperature indicator shows the temperature in the area around the sensor. However, the temperature may not be indicated correctly or the update may be delayed in the following conditions.**
  - **While parking or driving at low speeds**
  - **When the outside temperature changes suddenly (example: when going in and out of an underground parking area or when passing through a tunnel)**
  - **When starting the engine after being parked for a certain period of time**
- **You can set the temperature units to be displayed in Fahrenheit (°F) or Celsius (°C). For details, refer to "General settings" ☞P196 (11.6-inch display models) or "General settings" ☞P213 (dual 7.0-inch display models).**

■ Digital Speed Screen

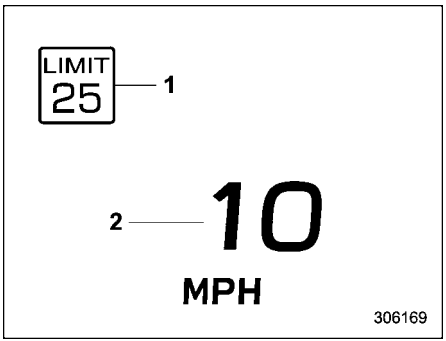

1 Speed limit indicator (if equipped)
2 Vehicle speed

This screen displays the current vehicle speed.

3-8. Center Information Display (CID)

WARNING

Always pay attention to safe driving when operating the center information display while the vehicle is in motion. When operation of the center information display is disturbing your awareness and ability to concentrate on driving, stop the vehicle in a safe place before performing operations on the display. Also, do not concentrate on the display while driving. Doing so could result in an accident.

■ Features

All information is displayed on the center information display, including vehicle settings, vehicle status, navigation system (if equipped) operation, audio operation, and climate control operation.

Items	Page for 11.6-inch display models	Page for dual 7.0-inch display models
Interruption screen	187	
Vehicle status and maintenance information	188	216
Vehicle settings	195	213/216
Climate control operations	195	212
Rear view camera	353	
Navigation system	Refer to the navigation/ audio Owner's Manual.	
Audio/telephone	Refer to the navigation/ audio Owner's Manual.	
EyeSight	Refer to the Owner's Manual supplement for the EyeSight system.	

The center information display can also be used to set and initialize the center information display itself.

NOTE

- **When the vehicle is in motion, certain functions and selections may not be available.**
- **The language and units for both the center information display and the combination meter display (color LCD) can be changed. For details, refer to "General settings" ☞P196 (11.6-inch display models) or "General settings" ☞P213 (dual 7.0-inch display models).**
  For details about unit settings, refer to "Car settings" ☞P201 (11.6-inch display models) or "Vehicle setting icons" ☞P219 (dual 7.0-inch display models).
- **The images displayed in this Owner's Manual are sample images. The actual image may vary depending on the region and vehicle specifications.**

■ Welcome Screen

Welcome screen and Good-bye screen are motion graphic displayed on the combination meter display and center information display upon entering and exiting the vehicle.

When the driver's door is opened and closed, the welcome screen will appear for a short time.

NOTE

- **The welcome screen will disappear when the ignition switch is turned to the "ON" position while the welcome screen is shown.**

- **The welcome screen can be turned on or off. For details, refer to "General settings" ☞P196 (11.6-inch display models) or "General settings" ☞P213 (dual 7.0-inch display models).**
- **For a certain period of time after the welcome screen has once appeared, it may not appear again even when the driver's door is opened and closed. This does not indicate a malfunction.**

■ Good-Bye Screen

The good-bye screen will be displayed under the following conditions.

- The driver's door is opened after the ignition switch is put in the "OFF" position.
- 3 minutes have passed after the ignition switch is put in the "OFF" position with the driver's door closed.
- 10 minutes have passed when the hands-free phone is used after the ignition switch is put in the "OFF" position.
- The battery voltage is low when the ignition switch is put in the "OFF" position.

■ Interruption Screen

Useful messages, such as reminders, weather information (if equipped) and traffic information (if equipped) may interrupt the current screen and appear on the display accompanied by a beep. Take the proper action according to the message.

■ Touch Screen Operations

The center information display has a touch screen. Operations are performed by touching the touch screen directly.

▼ Touch

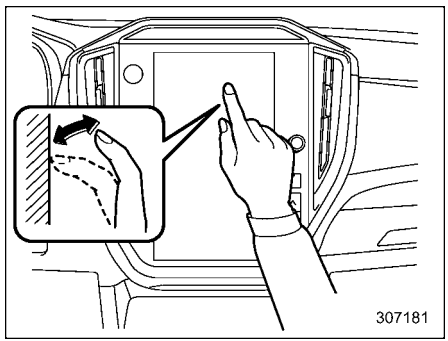

Quickly touch and release once.

▼ Drag

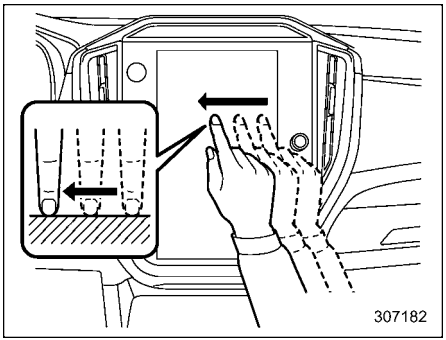

Touch the screen and move the screen to the desired position.

– CONTINUED –

▼ **Swipe**

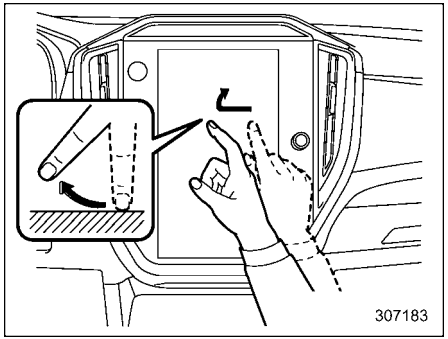

Quickly move the screen by swiping with your finger.

NOTE

Swipe operations may not be performed smoothly in high altitudes.

■ 11.6-Inch Display Models

NOTE

For dual 7.0-inch display models, refer to "Dual 7.0-Inch Display Models" ☞P211.

▼ **Touch screen**

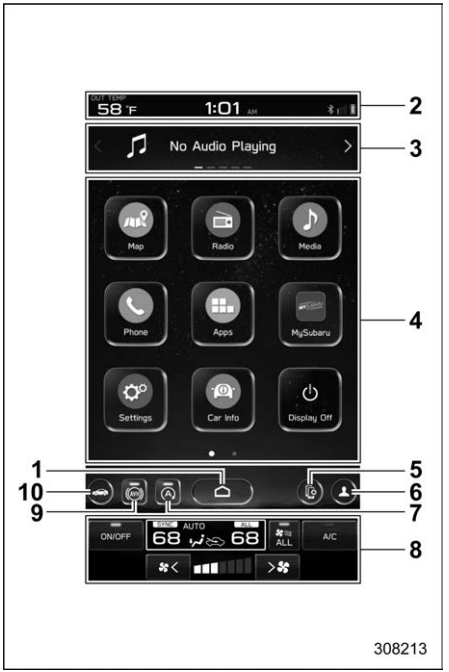

1 HOME icon (Refer to "HOME icon" ☞P195.)
2 Status bar (Refer to "Status bar" ☞P188.)
3 Information bar (Refer to "Information bar" ☞P189.)
4 Main screen (Refer to "Main screen" ☞P195.)
5 Manage device icon (Refer to the separate navigation/audio Owner's Manual)
6 Driver profiles icon (Refer to "Driver profiles icon" ☞P195.)
7 Auto Start Stop ON/OFF icon (Refer to "Auto Start Stop ON/OFF icon" ☞P191.)
8 Climate control screen (Refer to "Climate control screen" ☞P195.)
9 Auto Vehicle Hold (AVH) ON/OFF icon (Refer to "Auto Vehicle Hold (AVH) ON/OFF icon" ☞P192.)
10 Car settings icon (Refer to "Car settings icon" ☞P193.)

While the ignition switch is in the "ACC" or "ON" position, the touch panel will activate.

▽ **Status bar**

The outside temperature and clock are displayed on the status bar.

NOTE

- **The outside temperature indicator shows the temperature around the sensor. However, the temperature may not be indicated correctly or the update may be delayed in the following conditions.**
  - **While parking or driving at low speeds**
  - **When the outside temperature changes suddenly (example: when going in and out of an**

underground parking area or when passing through a tunnel)
  - When starting the engine after being parked for a certain period of time
- You can set the temperature to be displayed in Fahrenheit (°F) or Celsius (°C). For details, refer to "General settings" ☞P196.
- The clock can be displayed in either 12-hour display or 24-hour display. For details, refer to "General settings" ☞P196.
- Touch the clock on the status bar to display the clock setting screen. Refer to "Clock" ☞P225.
- For details about Bluetooth device information, refer to the navigation/audio Owner's Manual.

▽ **Information bar**

Swipe the information bar or touch < or > on the information bar to switch the item displayed.

Audio screen:

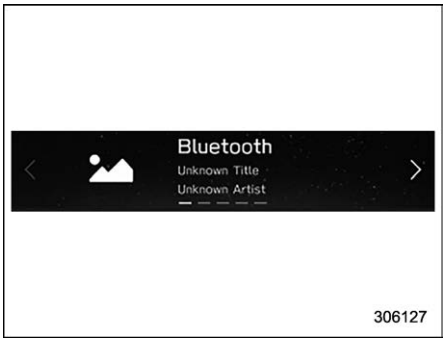

The screen of the currently selected audio source is displayed.

For details about how to use the audio set, refer to the separate navigation/audio Owner's Manual.

Navigation screen (models with navigation system):

The directions to the destination are displayed on the screen.

NOTE

When a destination is not set in the navigation system, the compass orientation, street name and speed limit remain displayed on the screen.

– CONTINUED –

Favorite screen:

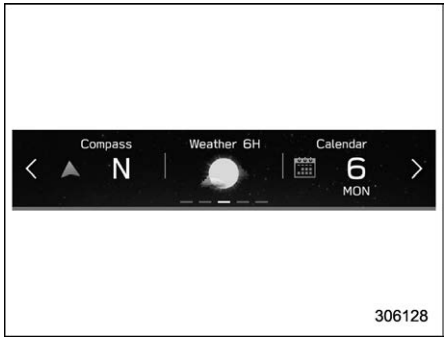

Favorite screen

This screen displays up to three optional pieces of information that can be selected from the following items.

Item	Details
Water Temp Norm	Engine coolant temperature
Oil Temp 158 °F	Engine oil temperature
AVG. A Speed 0 MPH	Average vehicle speed
Accel 49 %	Accelerator opening ratio
Angle 0°	Vehicle posture
Compass N	Direction of the vehicle*1
Weather 3H	Weather information for the next three hours*2
Weather 6H	Weather information for the next six hours*2
Speed Limit LIMIT 25	Posted speed limit of the road you are currently driving on*1
Calendar 6 MON	Calendar
Fuel ECO MPG Driver A	Driver Monitoring System*1 information and the average fuel consumption of driver
	Nothing is displayed.

*1: If equipped
*2: Models with SiriusXM Satellite Radio

NOTE

Some items may not be shown depending on the model and specifications.

The items shown on the favorite screen can be changed. For details, refer to “Favorite Widgets” ☞P206.

Weather information screen (if equipped):

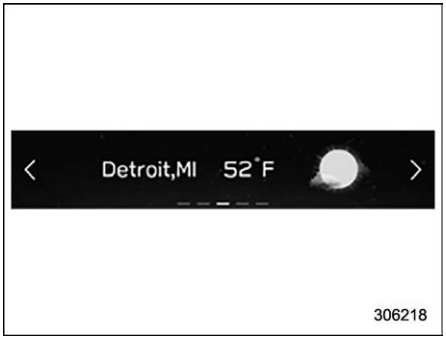

NOTE

- **When all of the following conditions are satisfied, weather information is displayed.**
  - **The vehicle is equipped with an audio and navigation system for SiriusXM satellite radio.**
  - **The SiriusXM satellite radio subscription is active.**
- **The weather forecast for the set destination remains displayed until a new destination is set or until the destination is reached.**
- **Depending on the reception timing of XM, the weather information may be delayed.**

▽ Main screen

For details about the following menu, refer to the separate navigation/audio Owner's Manual.

- Radio
- Media
- Phone
- Map
- Apps
- Add to Shortcut

For details about the following menu, refer to the Owner's Manual supplement for "SUBARU STARLINK Safety and Security".

- MySubaru

▽ Auto Start Stop ON/OFF icon

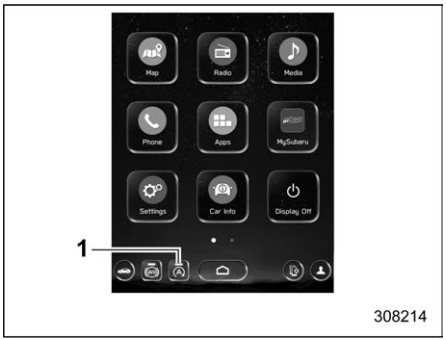

1 Auto Start Stop indicator (green)

Touching "Ⓐ" deactivates the Auto Start Stop system and turns off the Auto Start Stop indicator (green) on the screen. Touching "Ⓐ" again activates the Auto Start Stop system and turns on the Auto Start Stop indicator (green). Refer to "To turn on/off the Auto Start Stop system" ☞P351.

– CONTINUED –

▽ Auto Vehicle Hold (AVH) ON/OFF icon

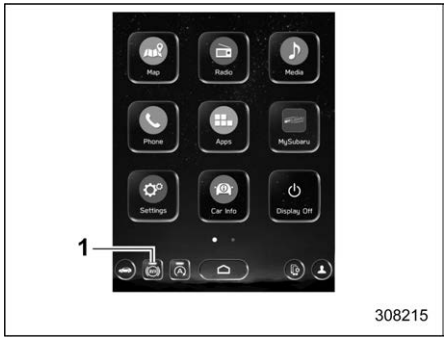

1 Auto Vehicle Hold (AVH) indicator (green)

Touching "(AVH)" deactivates the Auto Vehicle Hold (AVH) and turns off the Auto Vehicle Hold (AVH) indicator (green) on the screen. Touching "(AVH)" again activates the Auto Vehicle Hold (AVH) and turns on the Auto Vehicle Hold (AVH) indicator (green). Refer to "Auto Vehicle Hold function" ☞P343.

▽ Vehicle Dynamics Control icon

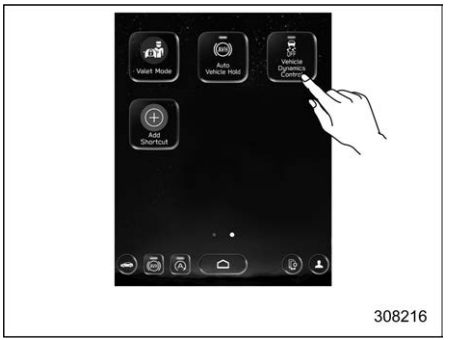

To turn the Vehicle Dynamics Control on and off, touch the "Vehicle Dynamics Control" icon.

When the Vehicle Dynamics Control system is turned off during engine operation, the Vehicle Dynamics Control OFF indicator light on the combination meter illuminates.

The Vehicle Dynamics Control system will be deactivated. When "Vehicle Dynamics Control" icon has been touched again to reactivate the Vehicle Dynamics Control system, the Vehicle Dynamics Control OFF indicator light turns off.

Refer to "To Turn On/Off the Vehicle Dynamics Control System" ☞P337.

▽ Display Off

Activation of the display off mode:

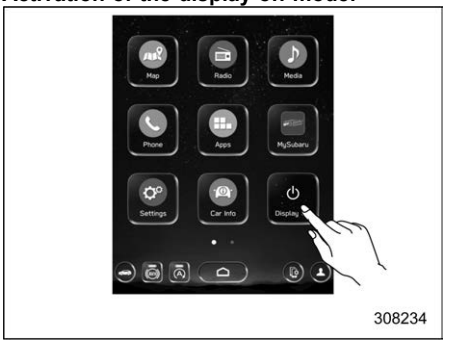

Touch "Display Off".

Deactivation of the display off mode:

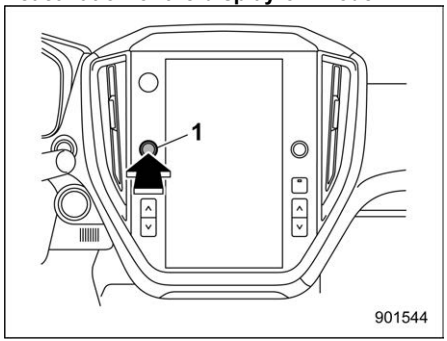

1 Volume knob

Press and hold the volume knob to turn the screen back on.

▽ Car settings icon

Touch 🚗 to display the items that are changeable while driving.

– CONTINUED –

Item		Available settings	Page reference for the vehicle system operation	Page reference for the setting procedure
1st menu	2nd menu			
Vehicle Control	Vehicle Dynamics Control	ON/OFF	337	205
	Cruise Control Acceleration	Eco/Comfort/Standard/Dynamic	*2	—
	Auto Vehicle Hold (AVH)	ON/OFF	343	205
	Steering Responsive Headlights (SRH)	ON/OFF	237	205
	Auto Start Stop	ON/OFF	351	205
Driving Assistance	Pre-Collision Braking	Setting ON/Setting OFF	*2	—
	Forward Collision Warning	Far/Normal/Near		
	Lane Departure	All Functions/Lane Departure Prevention Function Only/Warning Buzzer Only/OFF		
	Rear Vehicle Detection (BSD/RCTA)*1	ON/OFF	363	205
	Driver Monitoring System*1	ON/OFF	378	205
More Settings	Warning Volume	Min/Mid/Max	362, 376 and *2	—
	Units	km, km/h, Liter/ Miles, MPH, Gallon	150 and 177	205

*1: If equipped
*2: For details about the EyeSight system, refer to the Owner's Manual supplement for the EyeSight system.

▽ Driver profiles icon

Touch 👤 (driver profiles icon) to confirm the driver's information. For details, refer to the separate navigation/audio Owner's Manual.

▽ Manage devices icon

Touch the manage devices icon to pair your vehicle's system with a device that uses Android Auto, Apple CarPlay, or a similar application. For details, refer to the separate navigation/audio Owner's Manual.

▽ HOME icon

Touch ⌂ (HOME) to display the top menu.

▽ Climate control screen

The climate control status is shown on the screen.

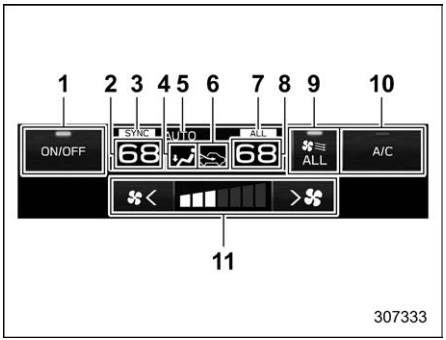

1 Climate control ON/OFF icon
2 Set temperature indicator (driver's side)
3 SYNC mode indicator
4 Airflow mode
5 Climate control mode
6 Air inlet selection
7 Dynamic Ventilation mode indicator
8 Set temperature indicator (passenger's side)
9 Dynamic Ventilation ON/OFF icon
10 Customizable icon
11 Fan speed control

When operating the climate control system, the main screen switches to the climate control screen. For details, refer to "Climate Control Panel" ☞P260.

▼ Main screen

To display the main screen, touch ⌂ (HOME).

In this Owner's Manual, the following settings will be explained. For details about other items, refer to the separate navigation/audio Owner's Manual.

– "Settings" → "General"
– "Settings" → "Car"
– "Car Info"

– CONTINUED –

▽ General settings

Set the time and display general items.

307841

1. Touch (HOME).
2. → (Settings)
3. → “General”
4. Select the preferred menu.

The setting adjustments to the following items can be manually changed to meet your personal requirements.

Item			Available settings	Page reference for the vehicle system operation	Page reference for the setting procedure
1st menu	2nd menu	3rd menu			
General	Clock	Time Setting*1*2	AUTO/Manual	225	225
		Time Setting*3	Sync With Phone/Manual		
		Time Zone*1	AUTO/Pacific/Mountain/Central/Eastern/Atlantic/Newfoundland/Hawaii/Alaska		205
		Daylight Saving Time*1	AUTO/ON (+1 hour)/OFF		205
		Clock Format	12H/24H		205
	Display	Display Off	Turn the screen off.	—	205
		Brightness Dial	ON/OFF	153	205
		Brightness/Contrast	Set and adjust the brightness and contrast of the display.	205	205
	Wi-Fi Settings	Wi-Fi	ON/OFF	*6	—
		Connected to:	Select the registered devise.		
		Available Wi-Fi Networks	Add		
		Wi-Fi Protected Setup	PIN Setup/Push Button Setup		
		Registered Wi-Fi Networks	—		
	Wi-Fi Security Information	Wi-Fi Security Information (AP mode)	—		

– CONTINUED –

Item			Available settings	Page reference for the vehicle system operation	Page reference for the setting procedure
1st menu	2nd menu	3rd menu			
General	Wi-Fi Hotspot	Wi-Fi Hotspot	ON/OFF	*7	—
		Wi-Fi name (SSID):	—		
		Security Type:	—		
		Password:	—		
		Broadcast Frequency:	—		
		SSID Broadcast	ON/OFF		
		Connected Devices:	—		
	Reminder Screen	Maintenance	ON/OFF	187	205
		Birthday	ON/OFF		205
		Anniversary	ON/OFF		205
	Valet Mode	Passcode Setting*8	Keyboard: Enter New Passcode	228	205
		Activate Valet Mode	Keyboard: Enter Your Passcode		
		Change Passcode	Keyboard: Change Passcode		
	Meter Screen	Gauge Initial Movement	ON/OFF	150	205
		Meter Information Screen	Eco Gauge, OUT TEMP/Clock, Compass*1, Gas Range	179	205
		Turn by Turn Screen Interruption*1	ON/OFF	182	205
	Camera	Rear Camera Delay Control	ON/OFF	354	205
		Steering Angle Lines	ON/OFF	355	205

Item			Available settings	Page reference for the vehicle system operation	Page reference for the setting procedure
1st menu	2nd menu	3rd menu			
General	Climate Control	Customize Climate Button	A/C/MAX A/C/AUTO/Recirculation/SYNC	267	205
	Temperature Units	°F/°C	—	188	205
	Language	—	English/Français/Español	177 and 186	205
	Tire Pressure Units*5	—	kPa/PSi	182	205
	Home Screen Shortcuts	—	ON/OFF	*6	205
	Welcome Screen	—	ON/OFF	179	205
	Goodbye Screen	—	ON/OFF	179	205
	Favorite Widgets	—	Set a favorite widget from the list.	189	206
	Birthday List	—	Set a birthday.	187	206
	Anniversary List	—	Set an anniversary day.	187	207
	Periodic Rest Notification*1	—	ON/OFF	*6	—
	Software Update	—	—		
	Factory Data Reset	—	Reset/Cancel		
	System Information	—	—		
	Free/Open Source Software Information	—	—		

– CONTINUED –

*1: Models with navigation system
*2: Models with SUBARU STARLINK Safety and Security without navigation system
*3: Models without SUBARU STARLINK Safety and Security or navigation system
*4: Models without navigation system
*5: If equipped
*6: For details about the audio and navigation system, refer to the Owner's Manual supplement for the audio and navigation system.
*7: For details, refer to the Owner's Manual supplement for "SUBARU STARLINK Safety and Security".
*8: Displayed until valet mode is set.

NOTE

Touch ⓘ to display the explanation of the items.

▽ Car settings

Perform the EyeSight system setting and vehicle setting.

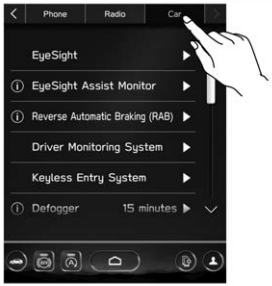

307842

1. Touch (HOME).
2. → (Settings)
3. → “Car”
4. Select the preferred menu.

– CONTINUED –

The setting adjustments to the following items can be manually changed to meet your personal requirements.

Item			Available settings	Page reference for the vehicle system operation	Page reference for the setting procedure
1st menu	2nd menu	3rd menu			
Car	EyeSight	Pre-Collision Braking	Setting ON/Setting OFF	*3	—
		Forward Collision Warning	Far/Normal/Near		
		Lane Departure	All Functions/Lane Departure Prevention Function Only/ Warning Buzzer Only/OFF		
		Cruise Control Acceleration	Eco/Comfort/Standard/Dynamic		
		Lead Vehicle Acquisition Sound	ON/OFF		
		Lead Vehicle Moving Monitor	ON/OFF		
		Select Drive on Left/Drive on Right	Right Lane/Left Lane		
	Reverse Automatic Braking (RAB)*1	Sonar Audible Alarm	ON/OFF	367	205
	Driver Monitoring System*1	Driver Monitoring System	ON/OFF	378	205
		Repeat Facial Scan	Perform the user recognition.		207
		User Recognition	ON/OFF		205
		Register User	Register the user.		207
		Delete User	Delete the registered user.		207
		Delete All Users	Delete all registered users.		207

Item			Available settings	Page reference for the vehicle system operation	Page reference for the setting procedure
1st menu	2nd menu	3rd menu			
Car	Keyless Entry System	Audible Signal*1*2	ON/OFF	119 and 124	205
		Hazard Warning Flasher	ON/OFF	119 and 125	205
		Driver Door Unlock*1	Driver Door Only/All	113	205
		Rear Gate/Trunk Unlock*1	Rear Gate/Trunk Only, All	113	205
	Defogger	—	15 minutes/Continuous	243	205
	Interior Light	—	10 seconds/20 seconds/30 seconds/OFF	281	205
	Auto Light Sensor	Light Sensitivity	Min/Low/Mid/Max	230	205
		Wiper Link	ON/OFF	231	205
	Welcome Lighting	Approaching Time Set	30 seconds/60 seconds/90 seconds/OFF	231	205
		Leaving Time Set	30 seconds/60 seconds/90 seconds/OFF		205
	One-Touch Lane Changer	—	ON/OFF	239	205
	Auto Door Lock/Unlock	Auto Door Lock	Vehicle Speed/Shift into or out of PARK/OFF	129	205
		Auto Door Unlock	Ignition OFF/Driver Door Open/Shift into or out of PARK/OFF		205

– CONTINUED –

Item			Available settings	Page reference for the vehicle system operation	Page reference for the setting procedure
1st menu	2nd menu	3rd menu			
Car	Rear Seat Reminder	—	ON/OFF	53	205
	Vehicle Dynamics Control	—	ON/OFF	337	205
	Auto Vehicle Hold (AVH)	—	ON/OFF	343	205
	Auto Start Stop	—	ON/OFF	351	205
	Rear Vehicle Detection (BSD/RCTA)*1	—	ON/OFF	363	205
	Steering Responsive Headlights (SRH)	—	ON/OFF	237	205
	Warning Volume	—	Min/Mid/Max	362, 376 and *3	205
	Units	—	km, km/h, Liter/Miles, MPH, Gallon	150 and 177	205

*1: If equipped
*2: This setting also works as the On/Off setting of the power rear gate buzzer for starting operation. However, you cannot change the warning buzzer setting for a detecting jam, etc.
*3: For details about EyeSight system, refer to the Owner's Manual supplement for the EyeSight system.

NOTE

Touch ⓘ to display the explanation of the items.

▼ How to select items on the screen

▽ ON/OFF setting

306133

Example

Touch the changing menu and select ON or OFF.

▽ Selecting

306134

Example

Touch the preferred item.

▼ How to set items on the screen

▽ Brightness/Contrast

Set and adjust the brightness and contrast of the center information display.

NOTE

"Brightness" can only be adjusted when "Brightness Dial" is off. Refer to "General settings" ☞P196.

1. Touch (HOME).
2. → (Settings)
3. → "General"
4. → "Display"
5. → "Brightness/Contrast"

306135

6. Drag ● to adjust the brightness and contrast.

– CONTINUED –

Touch “Default” to revert to the factory setting.

▽ Favorite Widgets

306136

The menu on the favorite screen can be customized.

1. Touch (HOME).
2. → (Settings)
3. → “General”
4. → “Favorite Widgets”
5. Select the icon of the display position.
6. Select the display item.

▽ Birthday List

If a birthday or anniversary is approaching, a message will be shown when the ignition switch is turned to the “ON” position. This function can be set to on or off by “Reminder Screen”. For details, refer to “General settings” ☞P196.

1. Touch (HOME).
2. → (Settings)
3. → “General”
4. → “Birthday List”

306137

5. → “Add”

306138

6. Enter the name.
7. → “Next”

306139

8. Enter the date.
9. → “OK”

NOTE

A maximum of 5 birthdays can be stored.

▽ Anniversary List

The procedure for setting an anniversary is the same as “Birthday List” ☞P206, except that in step 4 “Anniversary List” is selected.

▽ Driver Monitoring System (if equipped)

The Driver Monitoring System settings can be changed.

For setting method for the following menu on the Driver Monitoring System, refer to “ON/OFF setting” ☞P205.

- Driver Monitoring System
- User Recognition

Repeat Facial Scan:

1. Touch (HOME).
2. → (Settings)
3. → “Car”
4. → “Driver Monitoring System”
5. → “Repeat Facial Scan”

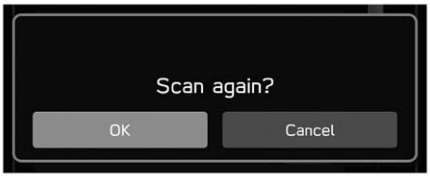

306140

6. → “OK”
7. While seated in the driver’s seat, face forward and wait for a few moments. When the scan is completed, the completion screen is displayed on the center information display.

Register User:

1. Touch (HOME).
2. → (Settings)
3. → “Car”
4. → “Driver Monitoring System”
5. → “Register User”

306141

6. Select the preferred user from the list.

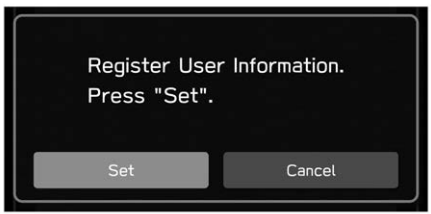

307303

7. → “Set”
8. While seated in the driver’s seat, face forward and wait for a few moments.

– CONTINUED –

306143

When the screen changes, the registration of the facial scan is completed.

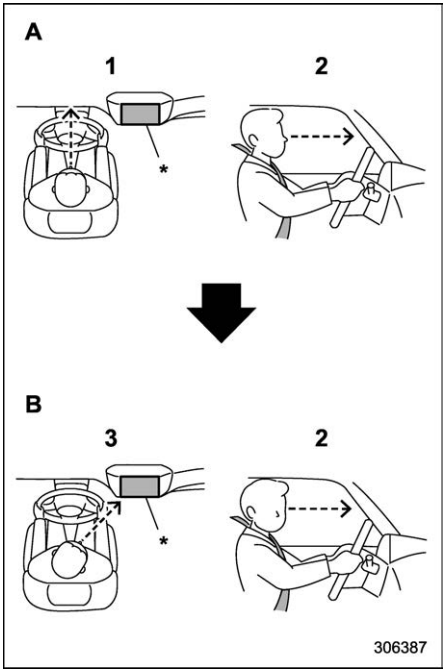

306387

A Forward direction
B Display direction
1 Face forward.
2 Do not lower your chin.
3 Face the display.
*: Display

NOTE

- **If user registration cannot be performed, turn your face forward as shown in the illustration, then turn to the display.**
- **There are some cases where user registration cannot be registered properly. In those cases, refer to "Driver Monitoring System" ☞P378.**
- **If "Unable to register. Try again." appears, repeat the procedure beginning from step 5.**

306138

9. Enter the name.
10. → "Next"

306144

11. Select the preferred icon.
12. → “Set”

NOTE

- **An existing user can be overwritten by selecting a registered number. When a user is registered by overwriting, the individual fuel economy data is reset.**
- **When “User Recognition” is set to OFF, user registration cannot be selected.**

Delete User:

1. Touch (HOME).
2. → (Settings)
3. → “Car”
4. → “Driver Monitoring System”
5. → “Delete User”

306147

6. Select the preferred user from the list.

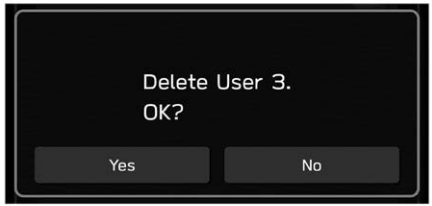

306148

7. → “Yes”

– CONTINUED –

Delete All Users:

1. Touch (HOME).
2. → (Settings)
3. → “Car”
4. → “Driver Monitoring System”
5. → “Delete All Users”

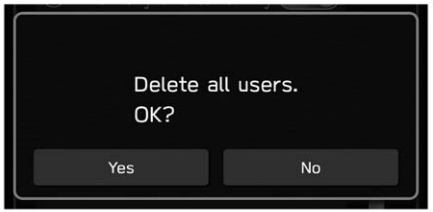

306149

6. → “Yes”

▼ Car information screen

1. Touch (HOME) to display the top menu.

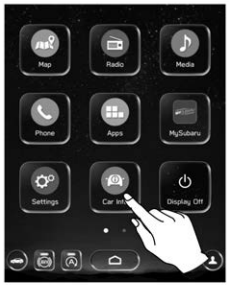

308218

2. → (Car Info)

▽ Driving Statistics screen

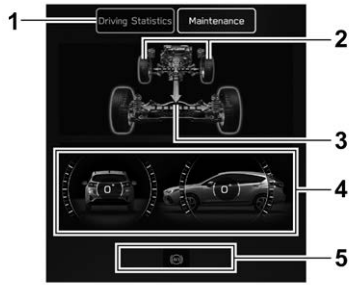

307407

1 Driving Statistics
2 Steering angle
3 Running condition
4 Vehicle posture
5 Telltale screen

This screen displays the driving status of the vehicle and the operation status functions. For functions that are operating, the indicator will illuminate or flash.

NOTE

- **The vehicle posture indication may differ from the actual vehicle posture.**
- **The vehicle posture angle varies not only due to the angle of the road surface, but also due to the vehicle tilt caused by the occupants, cargo,**

and acceleration or deceleration.

▽ **Maintenance screen**

307082

Maintenance reminders can be set.

Engine Oil change reminder:

1. Touch "Maintenance" from the 2nd menu in the car info screen.
2. → ⚙ (Engine Oil)
3. Select "Notification Date" or "Notification Distance" of the reminder.
4. → "Set"
5. → ☒

Oil Filter change reminder:

The setting procedure is the same as the "Engine Oil" reminder, but touch the "Oil Filter" item in step 2.

Tires rotation reminder:

The setting procedure is the same as the "Engine Oil" reminder, but touch the "Tires" item in step 2.

Maintenance Schedule setting:

The setting procedure is the same as the "Engine Oil" reminder, but touch the "Maintenance Schedule" item in step 2.

NOTE

- **Touch "Reset" to reset each setting.**
- **Touch "Default" to revert to the default value.**
- **For details about "Auto", refer to the Owner's Manual supplement for "SUBARU STARLINK Safety and Security".**

■ Dual 7.0-Inch Display Models

NOTE

For 11.6-inch display models, refer to "11.6-Inch Display Models" ☞P188.

▼ **Main screens**

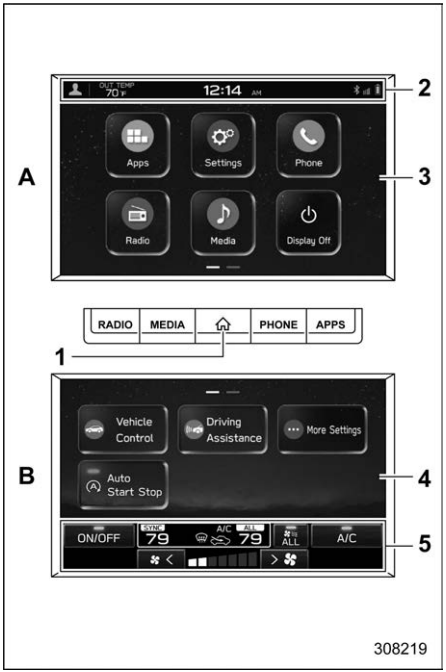

308219

A Upper display
B Lower display
1 HOME button (Refer to "HOME button" ☞P212.)
2 Status bar (Refer to "Status bar" ☞P212.)

– CONTINUED –

3 Upper main screen (Refer to “Setting of the upper display” ☞P213.)
4 Lower main screen (Refer to “Setting of the lower display” ☞P216.)
5 Climate control screen (Refer to “Climate control screen” ☞P212.)

While the ignition switch is in the “ACC” or “ON” position, the touch panel will activate.

▼ HOME button

Press ⌂ (HOME) to display the top menu.

▽ Status bar

The driver profiles icon, outside temperature and clock are shown on the display.

NOTE

- **The outside temperature indicator shows the temperature around the sensor. However, the temperature may not be indicated correctly or the update may be delayed in the following conditions.**
  - **While parking or driving at low speeds**
  - **When the outside temperature changes suddenly (example: when going in and out of an underground parking area or when passing through a tunnel)**
  - **When starting the engine after being parked for a certain period of time**
- **You can set the temperature to be displayed in Fahrenheit (°F) or Celsius (°C). For details, refer to “General settings” ☞P213.**
- **The clock can be shown in either 12-hour display or 24-hour display. For details about the setting, refer to “General settings” ☞P213.**
- **Touch the clock on the status bar to display the clock setting screen. Refer to “Clock” ☞P225.**

▽ Upper display

For details about items, refer to “Setting of the upper display” ☞P213.

For details about the following menu, refer to the separate navigation/audio Owner’s Manual.

- Radio
- Media
- Phone
- Apps
- Add to Shortcut

▽ Lower display

For details about the setting items, refer to “Setting of the lower display” ☞P216.

If this screen changes to the climate control screen, refer to “Dual 7.0-Inch Display Models” ☞P261.

▽ Climate control screen

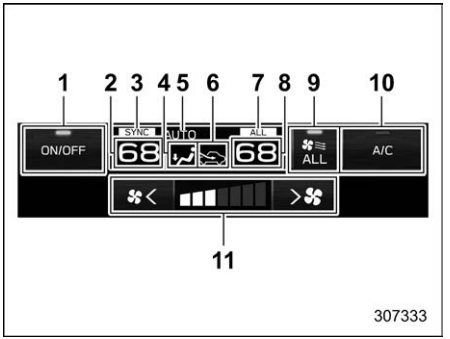

1 Climate control ON/OFF icon
2 Set temperature indicator (driver’s side)
3 SYNC mode indicator
4 Airflow mode
5 Climate control mode
6 Air inlet selection
7 Dynamic Ventilation mode indicator
8 Set temperature indicator (passenger’s side)
9 Dynamic Ventilation ON/OFF icon
10 Customizable icon
11 Fan speed control

When operating the climate control system, the main screen switches to the climate control screen. For details about climate control operation, refer to “Climate Control Panel” ☞P260.

▼ Setting of the upper display

In this Owner's Manual, the settings of the "General" menu will be explained. For details about other items, refer to the separate navigation/audio Owner's Manual.

▽ General settings

The "General" menu is used to set the display, language and time.

1. Press ⌂ (HOME).

308220

2. Touch ⚙ (Settings).
3. → "General"
4. Select the preferred menu.

– CONTINUED –

The setting adjustments to the following items can be manually changed to meet your personal requirements.

Item			Available settings	Page reference for the vehicle system operation	Page reference for the setting procedure
1st menu	2nd menu	3rd menu			
General	Clock	Time Setting	Sync With Phone/Manual	225	225
		Clock Format	12H/24H		226
	Display	Display Off	Turn the screen off.	—	222
		Brightness Dial	ON/OFF	—	222
		Brightness/Contrast	Set and adjust the brightness and contrast of the screen display and camera display.	—	222
	Reminder Screen	Maintenance	ON/OFF	187	222
		Birthday	ON/OFF		222
		Anniversary	ON/OFF		222
	Valet Mode	Passcode Setting*1	Keyboard: Enter New Passcode	228	205
		Activate Valet Mode	Keyboard: Enter Your Passcode		
		Change Passcode	Keyboard: Change Passcode		
	Meter Screen	Gauge Initial Movement	ON/OFF	150	222
		Meter Information Screen	Eco Gauge, OUT TEMP/Clock, Gas Range	179	222
	Camera	Rear Camera Delay Control	ON/OFF	354	222
		Steering Angle Lines	ON/OFF	355	222

Item			Available settings	Page reference for the vehicle system operation	Page reference for the setting procedure
1st menu	2nd menu	3rd menu			
General	Climate Control	Customize Climate Button	A/C/MAX A/C/AUTO/Recirculation/SYNC	267	222
	Temperature Unit	°F/°C	—	212	222
	Language	—	English/Français/Español	177 and 186	222
	Tire Pressure Units*2	—	kPa/PSi	182	222
	Home Screen Shortcuts	—	ON/OFF	*3	222
	Welcome Screen	—	ON/OFF	179	222
	Goodbye Screen	—	ON/OFF	179	222
	Birthday List	—	Set a birthday.	187	223
	Anniversary List	—	Set an anniversary day.	187	223
	Factory Data Reset	—	Reset/Cancel	*3	—
	System Information	—	—		
	Free/Open Source Software Information	—	—		

*1: Displayed until valet mode is set.
*2: If equipped
*3: For details about the audio and navigation system, refer to the Owner's Manual supplement for the audio and navigation system.

NOTE

Touch ⓘ to display the explanation of the items.

– CONTINUED –

▽ Display Off

Activation of the display off mode:

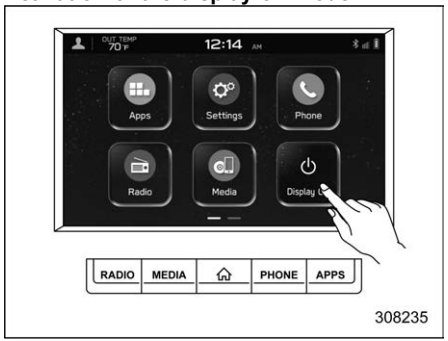

Touch “Display Off”.

Deactivation of the display off mode:

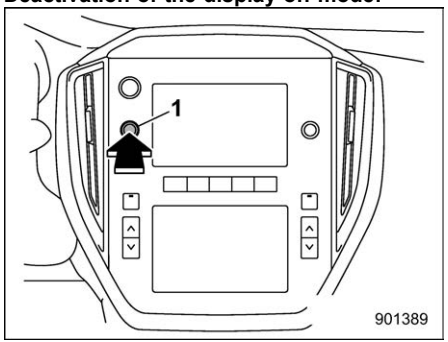

1 Volume knob

Press and hold the volume knob to turn the screen back on.

▼ Setting of the lower display

Touch (Car Settings). Refer to “Vehicle setting icons” ☞P219.

This screen displays the driving status of the vehicle and the operation status of the functions. Refer to “Driving Statistics” ☞P224.

Set the timing of the maintenance. Refer to “Maintenance” ☞P224.

▽ Vehicle settings while driving

Touch (Vehicle Control), (Driving Assistance), (More Settings), or (Auto Start Stop) to display the items that are changeable while driving.

Item			Available settings	Page reference for the vehicle system operation	Page reference for the setting procedure
1st menu	2nd menu	3rd menu			
Vehicle Control	Vehicle Dynamics Control	—	ON/OFF	337	222
	Cruise Control Acceleration	—	Eco/Comfort/Standard/Dynamic	*1	—
	Auto Vehicle Hold (AVH)	—	ON/OFF	343	222
	Steering Responsive Headlights (SRH)	—	ON/OFF	237	205
Driving Assistance	Pre-Collision Braking System	Pre-Collision Braking	Setting ON/Setting OFF	*1	—
		Forward Collision Warning	Far/Normal/Near		
	Lane Departure	—	All Functions/Lane Departure Prevention Function Only/ Warning Buzzer Only/OFF		
Auto Start Stop	—	—	ON/OFF	351	222
More Settings	Warning Volume	—	Min/Mid/Max	*1	222
	Units	—	km, km/h, Liter/ Miles, MPH, Gallon	150 and 177	222
	Auto Start Stop	—	ON/OFF	351	222

*1: For details about EyeSight system, refer to the Owner's Manual supplement for the EyeSight system.

– CONTINUED –

▽ Auto Start Stop ON/OFF icon

1 Auto Start Stop indicator (green)

Touching "Ⓐ" deactivates the Auto Start Stop system and turns off the Auto Start Stop indicator (green) on the screen. Touching "Ⓐ" again activates the Auto Start Stop system and turns on the Auto Start Stop indicator (green). Refer to "To turn on/off the Auto Start Stop system" ☞P351.

▽ Auto Vehicle Hold icon

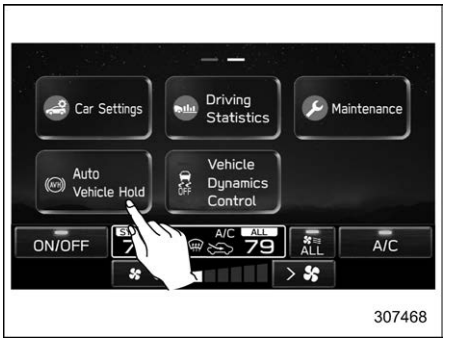

To turn the Auto Vehicle Hold function on and off, touch the "Auto Vehicle Hold" icon.

When the Auto Vehicle Hold function is turned off, the Auto Vehicle Hold indicator light will turn off.

Refer to "To turn on/off the Auto Vehicle Hold function" ☞P344.

NOTE

- **When the Auto Vehicle Hold function is on, the Auto Vehicle Hold indicator light on the combination meter turns on. The "Auto Vehicle Hold" indicator also turns on at the same time.**
- **When the Auto Vehicle Hold function is off, the Auto Vehicle Hold indicator light on the combination meter turns off. The "Auto Vehicle Hold" indicator also turns off at the same time.**

▽ Vehicle Dynamics Control icon

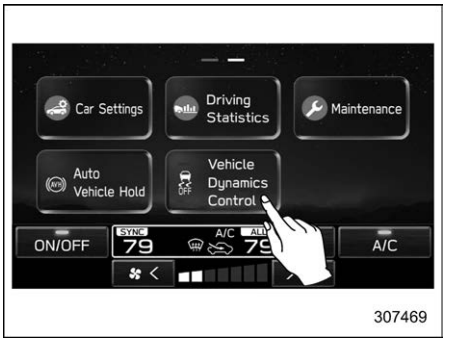

To turn the Vehicle Dynamics Control on and off, touch the "Vehicle Dynamics Control" icon.

When the Vehicle Dynamics Control system is turned off during engine operation, the Vehicle Dynamics Control OFF indicator light on the combination meter illuminates.

The Vehicle Dynamics Control system will be deactivated. When "Vehicle Dynamics Control" icon has been touched again to reactivate the Vehicle Dynamics Control system, the Vehicle Dynamics Control OFF indicator light turns off.

Refer to "To Turn On/Off the Vehicle

Dynamics Control System” ☞P337.

NOTE

- **When Vehicle Dynamics Control is on, the Vehicle Dynamics Control OFF indicator light on the combination meter turns off. The “Vehicle Dynamics Control” indicator turns on at the same time.**
- **When Vehicle Dynamics Control is off, the Vehicle Dynamics Control OFF indicator light on the combination meter turns on. The “Vehicle Dynamics Control” indicator turns off at the same time.**

▽ Vehicle setting icons

307470

1. Press ⌂ (HOME).
2. Touch (Car Settings).

– CONTINUED –

The setting adjustments to the following items can be manually changed to meet your personal requirements.

Item				Available settings	Page reference for the vehicle system operation	Page reference for the setting procedure
1st menu	2nd menu	3rd menu	4th menu			
Car Settings	EyeSight	Pre-Collision Braking System	Pre-Collision Braking	Setting ON/Setting OFF	*1	—
			Forward Collision Warning	Far/Normal/Near		
		Lane Departure	—	All Functions/Lane Departure Prevention Function Only/Warning Buzzer Only/OFF	*1	—
		Cruise Control Acceleration	—	Eco/Comfort/Standard/Dynamic	*1	—
		Lead Vehicle Acquisition Sound	—	ON/OFF	*1	222
		Lead Vehicle Moving Monitor	—	ON/OFF	*1	222
		Select Drive on Left/Drive on Right	—	Right Lane/Left Lane	*1	—
	Keyless Entry System	Hazard Warning Flasher	—	ON/OFF	125	222
		Audible Signal	—	ON/OFF	119 and 124	222
	Defogger	—	—	15 minutes/Continuous	243	222
	Interior Light	—	—	10 seconds/20 seconds/30 seconds/OFF	281	222
	Auto Light Sensor	Light Sensitivity	—	Min/Low/Mid/Max	230	222
		Wiper Link	—	ON/OFF	231	222

Item				Available settings	Page reference for the vehicle system operation	Page reference for the setting procedure
1st menu	2nd menu	3rd menu	4th menu			
Car Settings	Welcome Lighting	Approaching Time Set	—	30 seconds/60 seconds/90 seconds/OFF	231	222
		Leaving Time Set	—	30 seconds/60 seconds/90 seconds/OFF		222
	One-Touch Lane Changer	—	—	ON/OFF	239	222
	Auto Door Lock/Unlock	Auto Door Lock	—	Vehicle Speed/Shift into or out of PARK/OFF	129	222
		Auto Door Unlock	—	Ignition OFF/Driver Door Open/Shift into or out of PARK/OFF		222
	Rear Seat Reminder	—	—	ON/OFF	53	222
	Vehicle Dynamics Control	—	—	ON/OFF	337	222
	Auto Vehicle Hold (AVH)	—	—	ON/OFF	343	222
	Auto Start Stop	—	—	ON/OFF	351	222
	Warning Volume	—	—	Min/Mid/Max	*1	222
	Units	—	—	km, km/h, Liter/Miles, MPH, Gallon	150 and 177	222

*1: For details about EyeSight system, refer to the Owner's Manual supplement for the EyeSight system.

NOTE

Touch ⓘ to display the explanation of the items.

– CONTINUED –

▼ How to select items on the screen

▽ ON/OFF setting

306157

Example

Touch the changing menu and select ON or OFF.

▽ Selecting

306158

Example

Touch the preferred setting.

▼ How to set items on the screen

▽ Brightness/Contrast

Set and adjust the brightness and contrast of the center information display.

NOTE

"Brightness" can only be adjusted when "Brightness Dial" is off. Refer to "General settings" ☞P213.

1. Touch (HOME).
2. → (Settings)
3. → "General"
4. → "Display"
5. → "Brightness/Contrast"

306159

6. Drag ● to adjust the brightness and contrast.

Touch “Default” to revert to the factory setting.

▽ Birthday List

If a birthday or anniversary is approaching, a message will be displayed when the ignition switch is turned to the “ON” position. This function can be set to on or off by the “Reminder Screen”. For details, refer to “General settings” ☞P213.

1. Touch ⌂ (HOME).
2. → ⚙ (Settings)
3. → “General”
4. → “Birthday List”

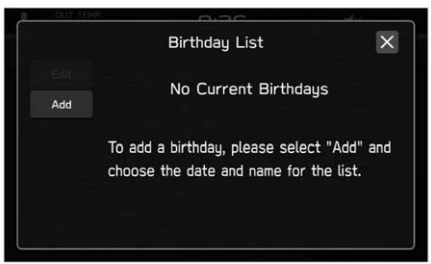

306160

5. → “Add”

306161

6. Enter the name.
7. → “Next”

306162

8. Enter the date.
9. → “OK”

NOTE

A maximum of 5 birthdays can be stored.

▽ Anniversary List

The procedure for setting an anniversary is the same as “Birthday List” ☞P223, except that in step 4 “Anniversary List” is selected.

– CONTINUED –

▼ Driving Statistics

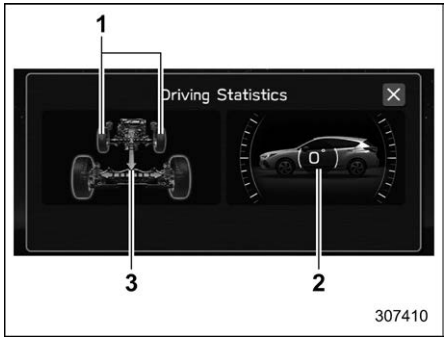

1 Steering angle
2 Vehicle posture
3 Running condition

This screen displays the driving status of the vehicle and the operation status of the functions. For functions that are operating, the indicator will illuminate or flash.

NOTE

- **The vehicle posture indication may differ from the actual vehicle posture.**
- **The vehicle posture angle varies not only due to the angle of the road surface, but also due to the vehicle tilt caused by the occupants, cargo, and acceleration or deceleration.**

▼ Maintenance

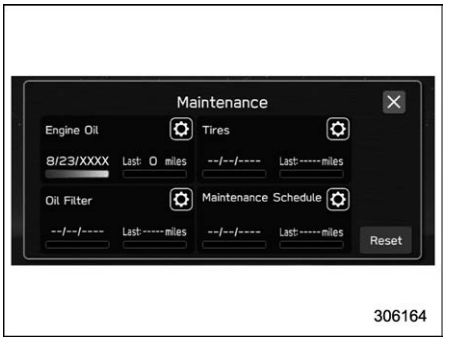

Maintenance reminders can be set.

Engine Oil setting:

1. Touch (Maintenance).
2. → (Engine Oil)
3. Select “Notification Date” or “Notification Distance” of the reminder.
4. → “Set”
5. → ☒

Oil Filter setting:

The setting procedure is the same as “Engine Oil” setting, but touch the “Oil Filter” item in step 2.

Tires setting:

The setting procedure is the same as “Engine Oil” setting, but touch the “Tires” item in step 2.

Maintenance Schedule setting:

The setting procedure is the same as “Engine Oil” setting, but touch the “Maintenance Schedule” item in step 2.

NOTE

- **Touch “Reset” to reset each setting.**
- **Touch “Default” to revert to the default value.**

3-9. Clock

For models with a genuine SUBARU navigation and/or audio system, the clock can be adjusted using either auto mode or manual mode.

■ Setting the Clock Manually

▼ Dual 7.0-inch display models

1. Turn the ignition switch to the “ON” position.

308221

2. Press ⌂ (HOME).
3. Touch ⚙ (Settings).
4. → “General”
5. → “Clock”
6. → “Time Setting”

306122

7. → “Manual”
8. → ∧ or ∨
9. → “OK”

NOTE

The clock setting screen can also be displayed by touching the clock on the status bar.

▼ 11.6-inch display models

1. Turn the ignition switch to the “ON” position.

308217

2. Touch ⌂ (HOME).
3. → ⚙ (Settings)
4. → “General”
5. → “Clock”
6. → “Time Setting”

– CONTINUED –

307080

7. → “Manual”
8. → ∧ or ∨
9. → “OK”

NOTE

The clock setting screen can also be displayed by touching the clock on the status bar.

■ Setting the Clock Automatically

▼ Dual 7.0-inch display models

1. Turn the ignition switch to the “ON” position.

308221

2. Press ⌂ (HOME).
3. Touch ⚙ (Settings).
4. → “General”
5. → “Clock”
6. → “Time Setting”

307081

7. → “Sync With Phone”

The clock will be set and adjusted automatically when a smartphone is connected via Bluetooth® for transferring phonebook data.

1. Register the smartphone to the audio system. For details, refer to “Bluetooth SETTINGS” in the supplemental Owner’s Manual for the audio/navigation system.
2. Transfer phonebook data to the system. For details, refer to “Bluetooth SETTINGS” in the supplemental Owner’s Manual for the audio/navigation system. The clock will be adjusted automatically.

NOTE

Depending on the model of smartphone, the settings of the connected smartphone may need to be changed. (ex: For iOS or other models, notification settings may need to be activated.) For details, check the instructions on connecting smartphones.

▼ **11.6-inch display models**

1. Turn the ignition switch to the “ON” position.

308217

2. Touch (HOME).
3. → (Settings)
4. → “General”
5. → “Clock”
6. → “Time Setting”
7. Models with navigation system:
   → “AUTO”
   Models with SUBARU STARLINK Safety and Security without navigation system:
   → “AUTO”
   Models without SUBARU STARLINK Safety and Security or navigation system:
   → “Sync With Phone”

▽ **Models with navigation system**

The clock will be set automatically where a GPS signal is available.

▽ **Models with SUBARU STARLINK Safety and Security without navigation system**

The clock will be set automatically where a DCM (Data Communication Module in vehicle cellular connection) signal is available.

▽ **Models without SUBARU STARLINK Safety and Security or navigation system**

The clock will be set and adjusted automatically when a smartphone is connected via Bluetooth® for transferring phonebook data.

1. Register the smartphone to the audio system. For details, refer to “Bluetooth SETTINGS” in the supplemental Owner’s Manual for the audio/navigation system.
2. Transfer phonebook data to the system. For details, refer to “Bluetooth SETTINGS” in the supplemental Owner’s Manual for the audio/navigation system. The clock will be adjusted automatically.

NOTE

Depending on the model of smartphone, the settings of the connected smartphone may need to be changed. (ex: For iOS or other models, notification settings may need to be activated.) For details, check the instructions on connecting smartphones.

■ Time Zone (Models with Navigation System)

You can configure the “Time Zone” setting on the clock setting screen.

If a GPS signal is available when “AUTO” is selected, “Time Zone” is set automatically. Refer to “Main screen” ☞P195 for the setting.

■ Daylight Saving Time (Models with Navigation System)

You can configure the “Daylight Saving Time” setting on the clock setting screen.

– CONTINUED –

If a GPS signal is available when “AUTO” is selected, “Daylight Saving Time” is set automatically. Refer to “Main screen” ☞P195 for the setting.

NOTE

- **When “Time Setting” is set to “AUTO”, you can change “Daylight Saving Time” and “Time Zone” settings.**
- **When “Daylight Saving Time” is set to “AUTO”, the “Time Zone” setting can only be set to “AUTO”.**

3-10. Valet Mode

When leaving your vehicle with a valet service, such as at a hotel or restaurant, you can set the valet mode, which disables the navigation, audio, and vehicle setting functions.

■ Activation of Valet Mode

307879

11.6-inch display models

308222

Dual 7.0-inch display models

1. Touch “Valet Mode”.

307145

11.6-inch display models

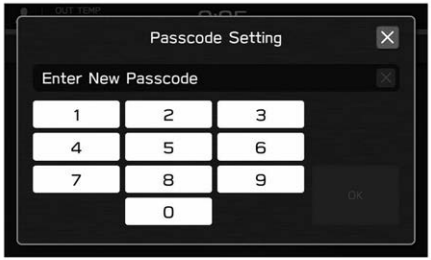

307247

Dual 7.0-inch display models

2. Enter the passcode.
3. Touch “OK”.

■ Deactivation of Valet Mode

308223

11.6-inch display models

307248

Dual 7.0-inch display models

1. Touch “Valet Mode” or select OFF (11.6-inch display models).
   Touch “Deactivate” (dual 7.0-inch display models).
2. Enter the passcode.
3. Touch “OK”.

NOTE

If you enter the passcode incorrectly three times in a row when setting or canceling valet mode, a message prompting you to contact a SUBARU dealer will be displayed, but it is still possible to enter the passcode even after the fourth attempt.

If you have forgotten your passcode, consult your SUBARU dealer.

3-11. Light Control Switch

⚠ CAUTION

- **Use of any lights for a long period of time while the engine is not running can cause the battery to discharge.**
- **Before leaving the vehicle, make sure that the light control switch is turned to the off position. If the vehicle is left unattended for a long time with the light control switch set to a position other than the off position, even though the lights will turn off after 10 minutes, the battery may be discharged.**

Models with “keyless access with push-button start system”:

The light control switch operates when the push-button ignition switch is in the “ACC” or “ON” position.

Regardless of the position of the light control switch, the illuminated lights are turned off when the push-button ignition switch is turned off.

– CONTINUED –

Models without “keyless access with push-button start system”:

The light control switch operates when the key is inserted in the ignition switch.

Regardless of the position of the light control switch, the illuminated lights are turned off when the key is removed from the ignition switch.

NOTE

The light control switch can be operated (except auto on/off headlights) even when under the following conditions.

- **When the push-button ignition switch is turned to the “OFF” position (models with “keyless access with push-button start system”)**
- **When the key is not inserted into the ignition switch (models without “keyless access with push-button start system”)**

If the driver’s door is opened while the headlights are illuminated under such conditions, a chirp sound will inform the driver that the lights are illuminated.

■ Headlights

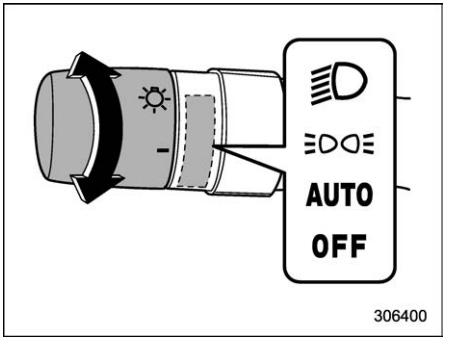

To turn on the headlights, turn the knob on the end of the light control switch.

“OFF” position (for U.S. models):

The headlights are all off.

Only when the following conditions are fulfilled, instrument panel illumination, headlights, parking lights, front side marker lights, rear side marker lights, tail lights and license plate lights are automatically on or off depending on the level of the ambient light.

- The engine is running.
- The parking brake is fully released.
- The select lever is in a position other than the “P” position.

“OFF” position (for Canada models):

The headlights are all off.*1*2

*1: When the light switch is switched to the “OFF” position while the vehicle is stopped, the lights turn off. Then the light switch will automatically return to the “AUTO” position.

*2: The headlights will automatically change to the AUTO mode when the following conditions are met:

- The engine is running.
- The parking brake is fully released.
- The select lever is in a position other than the “P” position.

“AUTO” position: Auto on/off headlights

When the ignition switch is in the “ON” position, the instrument panel illumination, headlights, parking lights, front side marker lights, rear side marker lights, tail lights and license plate lights are **automatically on or off** depending on the level of the ambient light.

NOTE

- **If the light control switch is in the “AUTO” position and the headlights do not turn on when it becomes dark outside, turn the light switch to the “⇶” position. If this happens, have your vehicle inspected by your SUBARU dealer as soon as possible.**

- **The light sensitivity of the auto on/off headlights can be changed by operating the center information display. For details, refer to "Car settings" ☞P201 (11.6-inch display models) or "Vehicle setting icons" ☞P219 (dual 7.0-inch display models). Also, the setting can be changed by a SUBARU dealer. Consult your SUBARU dealer for details.**

"≡DO≡" position:

Instrument panel illumination, parking lights, front side marker lights, rear side marker lights, tail lights and license plate lights are on.

"≡D" position:

Instrument panel illumination, headlights, parking lights, front side marker lights, rear side marker lights, tail lights and license plate lights are on.

▼ Auto-on/off wiper-linked headlights

While the light control switch is in the "AUTO" position, the headlights will automatically turn on when the windshield wipers operate several times. The headlights will automatically turn off approximately 1 minute after the wiper stops.

The ON/OFF setting of this function can be changed by operating the center information display. For details, refer to "Car settings" ☞P201 (11.6-inch display models) or "Vehicle setting icons" ☞P219 (dual 7.0-inch display models). Also, the setting can be changed by a SUBARU dealer. Consult your SUBARU dealer for details.

NOTE

The auto-on/off wiper-linked headlights may not operate depending on the level of ambient light.

▼ Welcome lighting function

The welcome lighting function turns on the low beam headlight for smooth approaching to or exiting from the vehicle at night or in a dark place.

The function is activated while all of the following conditions are met.

- The light control switch is in the "AUTO" position.
- It is dark enough to turn on the auto on/off headlights.

NOTE

If the engine is turned off after turning off the light switch, the welcome lighting function may not operate (for Canada models).

▽ When approaching

While the welcome lighting function is activated, the low beam headlights will automatically illuminate when unlocking the doors by using the remote keyless entry system.

The low beam headlights will remain illuminated for 30 seconds*1 and then turn off. However, if any of the following operations is done, the low beam headlights will turn off.

- The doors are locked.
- The light control switch is turned to a position other than "AUTO".

▽ When exiting

While the welcome lighting function is activated, the low beam headlights will remain illuminated even when either of the following operation is done.

- The push-button ignition switch is turned to the "OFF" status (models with "keyless access with push-button start system").
- The key is pulled out from the ignition switch (models without "keyless access with push-button start system").

The low beam headlights will turn off under any of the following conditions.

- 3 minutes have passed since the low beam headlights were illuminated by the welcome lighting function.

– CONTINUED –

- 30 seconds have passed since the door is opened and closed.*1
- The light control switch is turned to a position other than “AUTO”.
- The locking procedure is performed twice. When performing the unlocking procedure after performing the locking procedure, perform the locking procedure twice again.

*1: The setting for the period of time in which the low beam headlights remain on by the welcome lighting function can be changed by a SUBARU dealer. Contact your SUBARU dealer for details. Also, you can change the setting by operating the center information display. For details, refer to “Car settings” ☞P201 (11.6-inch display models) or “Vehicle setting icons” ☞P219 (dual 7.0-inch display models).

▼ Battery drainage reduction function

When the headlights are illuminated under the following conditions, the battery drainage reduction function will be active.

- The push-button ignition switch is turned to the “OFF” status (models with “keyless access with push-button start system”).
- The key is pulled out from the ignition switch (models without “keyless access with push-button start system”).

When the battery drainage reduction function is active, the following system operations help reduce the risk of battery discharge.

- The headlights turn off automatically after 10 minutes.
- When you open or close the door or operate the light control switch, the headlights will turn off automatically 10 minutes later.

NOTE

- **When you leave the vehicle, put the light control switch in the “OFF” position to prevent battery discharge.**
- **When you open or close the door or operate the light control switch after the headlights turn off automatically, the headlights will turn on again.**

▼ Sensor for the auto on/off headlights

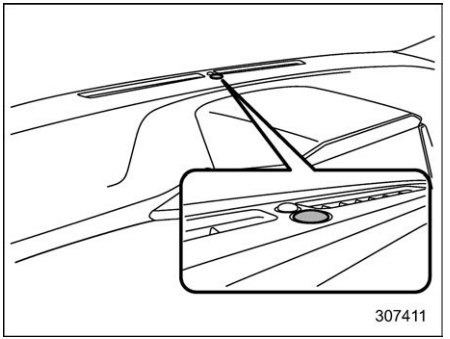

The sensor is on the dashboard as shown in the illustration.

⚠ CAUTION

If any object is placed on or near the sensor, the sensor may not detect the level of the ambient light correctly and the auto on/off headlights may not operate properly.

■ High/Low Beam Change (Dimmer)

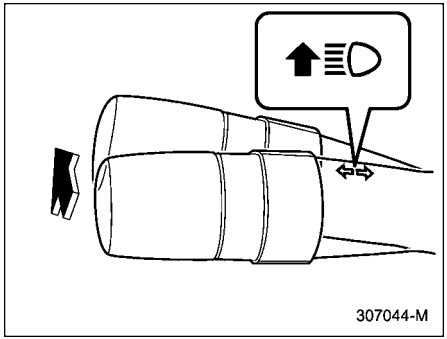

While the light control switch is in the "" or "AUTO" position in a dark place, the headlights will turn on.

Pushing the lever forward and releasing it will activate the high beam. Pulling the lever rearward and releasing it will switch the headlights to low beam.

When the light control switch is in the "AUTO" position, pushing the lever forward turns the High Beam Assist is on.

Refer to "High Beam Assist Function" ☞P233.

When the headlights are on high beam, the high beam indicator light "" on the combination meter is also on.

■ Headlight Flasher

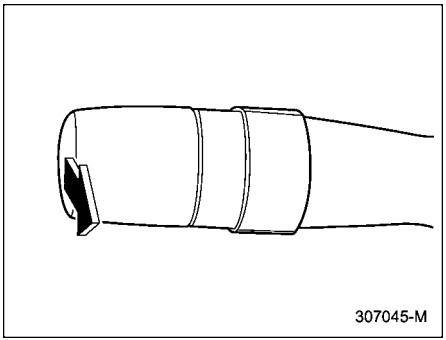

CAUTION

Do not hold the lever in the flashing position for more than just a few seconds.

To flash the headlights, pull the lever toward you and then release it. The high beam will stay on for as long as you hold the lever. The headlight flasher works even though the lighting switch is in the off position.

When the headlights are on high beam, the high beam indicator light "" on the combination meter also illuminates.

■ High Beam Assist Function

NOTE

- **The high beam assist function utilizes the stereo camera installed at the position of the front map lights.**
- **For details on how to handle the stereo camera, refer to the Owner's Manual supplement for the EyeSight system.**

The high beam assist function automatically changes the headlight from high beam to low beam (or vice versa).

When all of the following conditions are met, the headlight will change to high beam.

- When the vehicle speed increases to or above 20 mph (32 km/h).
- There is no preceding or oncoming vehicle.
- The forward area of the vehicle is dark.
- The road does not have a sharp curve.

When any of the following conditions are met, the headlight will change to low beam.

- When the vehicle speed decreases to or below 10 mph (16 km/h).
- When the forward area of the vehicle is bright.
- When there is a preceding or oncoming vehicle.

– CONTINUED –

- When the EyeSight system is malfunctioning or is temporarily stopped.

NOTE

- **Do not overestimate the capacity of the high beam assist function. The driver always has the responsibility to understand the surrounding situation, to drive safely, and to change the headlight mode manually if necessary.**
- **The factory setting (default setting) for this function is set as "operational". This setting can be changed to OFF (non-operation) at SUBARU dealers. For more details, contact a SUBARU dealer.**

▼ How to use the high beam assist function

The high beam assist function will be activated when all the following conditions are met.

- The light control switch is in the "AUTO" position and the low beam headlights are on automatically.
- The turn signal lever is pushed forward.

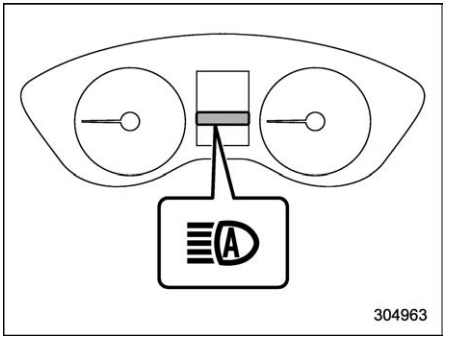

High beam assist indicator

When the high beam assist function is activated, the high beam assist indicator on the combination meter will illuminate.

NOTE

If the high beam assist function is malfunctioning or is temporarily stopped, the headlight will be fixed at low beam.

▼ How to temporarily lower the sensitivity of the high beam assist function

The sensitivity of the high beam assist function can be lowered by using the following operations.

1. After turning the ignition switch to the "ON" position, set the light control switch to the "AUTO" position and push the signal lever forward (high beam position).
2. After the high beam assist indicator on the combination meter will illuminate, turn the ignition switch to the "OFF" position.
3. Turn the ignition switch to the "ON" position and within approximately 15 seconds, press the "▲ / ▼" (following distance setting) switch more than 10 times consecutively.

When the sensitivity of the high beam assist function is lowered, the high beam assist indicator light "" on the combination meter display (color LCD) will flash.

NOTE

- **The sensitivity of the high beam assist function cannot be lowered in the following conditions.**
  - **Cruise control indicator is illuminated.**
  - **The EyeSight warning indicator (yellow) is illuminated.**
- **The sensitivity of the high beam assist function returns to normal level the next time the ignition switch is turned to the "LOCK"/ "OFF" position and the engine is restarted.**

▼ How to change the headlight mode manually

Change to the low beam:

- Set the light control switch to "".
- Pull the lever while the high beam is turning on and release it.

Change to the high beam:

Push the lever forward and release it.

At this time, the high beam assist function will turn off, the high beam assist indicator will turn off and the high beam indicator light will turn on.

NOTE

- **After manually changing the headlight mode to the high beam, if you turn on the high beam assist function, push the lever forward and release it.**
- **When manually changing the headlight mode to the high beam, if you turn the light control switch to the "" position, the parking lights, front side marker lights, rear side marker lights, tail lights and license plate lights will turn on.**

▼ Tips for the high beam assist system

- The high beam assist function recognizes the condition surrounding the vehicle based on the brightness of illumination ahead of your vehicle, etc. Therefore, the headlight mode may switch in some situations that do not match to the driver's sense.
- A bicycle or cargo cycle may not be detected.
- Under the following situations, the brightness of ambient illumination may not be detected correctly and the high beam assist function may not work properly. As a result, the glare of the high beam may disturb the oncoming vehicle or vehicle ahead. Also, the low beam mode may continue although there are no oncoming vehicles and vehicles ahead. In the such cases, change the headlight mode manually.
  - In bad weather (fog, snow, sand storm, heavy rain, etc.).
  - When the windshield glass is dirty or fogged.
  - When the windshield is cracked or damaged.
  - If there are lights similar to the headlights or the tail lights in the surrounding area.
  - When an oncoming vehicle or vehicle ahead is driven without its headlights and tail lights on.
  - If the headlights of an oncoming vehicle or the tail lights of a vehicle ahead are dirty or discolored, or if the light beams are not aimed correctly.
  - When a rapid change of brightness continues while driving.
  - When driving on a road with many ups and downs or uneven surfaces.
  - When driving on a road with many curves.
  - When there are some objects that reflect light strongly, such as a road sign or a mirror in vehicle ahead.
  - When the rear part of the vehicle ahead, such as a container, reflects light strongly.
  - When the headlights of your vehicle are damaged or dirty.
  - When your vehicle is tilted, such as in case the vehicle has a flat tire or is being towed.
  - When the stereo camera is deformed or the stereo camera lenses are dirty.
  - Immediately after the engine has started.
- In the following conditions, the headlight mode will not be automatically

– CONTINUED –

changed from the high beam to the low beam.
  - When your vehicle passes an oncoming vehicle suddenly in a blind curve.
  - When another vehicle passes in front of your vehicle.
  - When an oncoming vehicle or vehicle ahead comes in and out of view because of continuous curves, median strips, roadside trees, etc.
- If the stereo camera detects the light of the front fog lights of an oncoming vehicle, the headlight mode may change from the high beam to the low beam automatically.
- The headlight mode may change from the high beam to the low beam, or the low beam mode may continue, when affected by a street light, traffic signal, illumination of an advertisement board, or a reflective object such as a road sign and signboard.
- The timing of the change of headlight mode may differ due to the following factors.
  - Color or brightness of the headlights of an oncoming vehicle or the tail lights of a vehicle ahead.
  - The headlights of the oncoming vehicle or the tail lights of the vehicle ahead are covered with mud, snow, etc.
  - Movement and direction of an oncoming vehicle or a vehicle ahead.
  - When the headlights of an oncoming vehicle or the tail lights of a vehicle ahead illuminate on only one side.
  - When the oncoming vehicle or vehicle ahead is a motorcycle.
  - Conditions of a road (slope, curve, road surface, etc.).
  - Number of passengers and weight of loaded cargo.
  - Limitation of the detection ability of the stereo camera.

■ Daytime Running Light System

WARNING

When the daytime running lights are illuminated, the tail lights do not illuminate. When it becomes dark outside, turn the light switch to the "≡D" position to illuminate the headlights and tail lights. This will improve visibility and allow other drivers to see your vehicle more easily.

The daytime running lights will automatically illuminate when the following conditions are fulfilled.

- The engine is running.
- The parking brake is fully released.
- The light control switch is in "AUTO", "≡DOE" or "OFF".
- The select lever is in a position other than the "P" position.

NOTE

When the light switch is in the "≡DOE" position, the instrument panel illumination, front side marker lights, tail lights and license plate lights are also illuminated.

3-12. Steering Responsive Headlight (SRH)

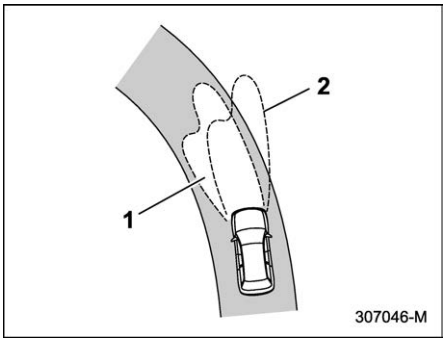

1 The target area of illumination when SRH is activated
2 The target area of illumination when SRH is not activated

SRH is a function that automatically moves the headlight beam to the left or right in accordance with the steering angle and vehicle speed. This function helps to improve the visibility at night by illuminating the road ahead at corners and intersections.

You can turn the SRH function on or off. The settings can be changed by using the center information display. For details, refer to “Car settings” ☞P201.

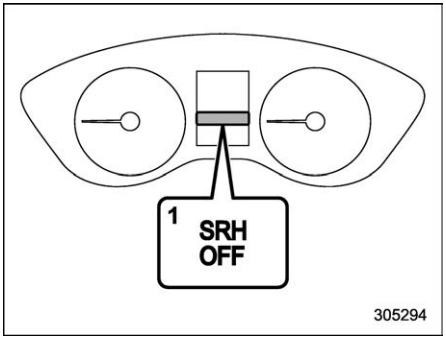

1 Steering Responsive Headlight OFF indicator light

The Steering Responsive Headlight OFF indicator light on the combination meter display (color LCD) turns off when SRH is turned on.

The Steering Responsive Headlight OFF indicator light on the combination meter display (color LCD) illuminates when SRH is turned off.

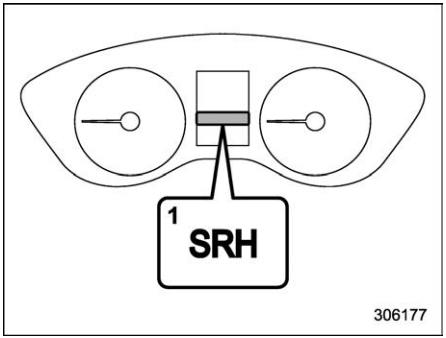

1 Steering Responsive Headlight warning light

If SRH is malfunctioning, the Steering Responsive Headlight warning light on the combination meter display (color LCD) illuminates and a message appears on the warning screen when the ignition switch is in the “ON” position. It indicates that SRH has been deactivated. Contact a SUBARU dealer for an inspection.

NOTE

- **The SRH function operative/non-operative status is kept when the engine is turned off, even if the engine is restarted.**
- **When you turn the ignition switch to the “ON” position, the Steering Responsive Headlight OFF indicator**

– CONTINUED –

light will illuminate and turn off after several seconds.

- **SRH only activates when the vehicle is traveling forward at the speed of approximately 5 mph (8 km/h) or more.**

3-13. Headlight Beam Leveler

The LED headlights produce more light than conventional halogen headlights.

When the vehicle is carrying a heavy load and the headlight beams are angled upwards, the driver of an oncoming vehicle may experience glare.

To prevent this, the automatic headlight beam leveler adjusts the headlights to the optimum height automatically depending on the load the vehicle is carrying.

CAUTION

In certain circumstances, the headlights may become misaligned, and the headlight beam leveler will not reset them to the proper angle. This may occur after transporting your vehicle on a flat-bed truck, or if the vehicle is parked and restarted on different angles. In such cases, have the headlight alignment checked by a SUBARU dealer.

3-14. Front Fog Light Switch (If Equipped)

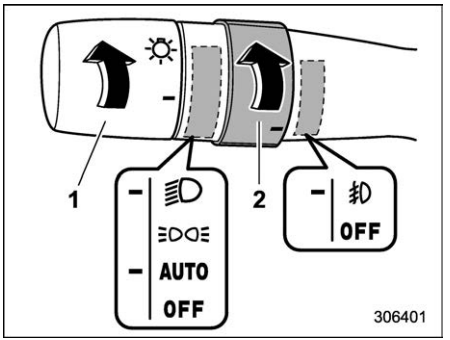

1 Headlight switch
2 Fog light switch

To turn on the front fog lights:

Turn the fog light switch to the "⇶" position while the headlights are in either of the following conditions.

- The headlight switch is in the "≣D" position with the low beam mode selected.
- The headlight switch is in the "AUTO" position and the low beam headlights turn on automatically.

To turn off the front fog lights:

Turn the fog light switch back down to the

"OFF" position.

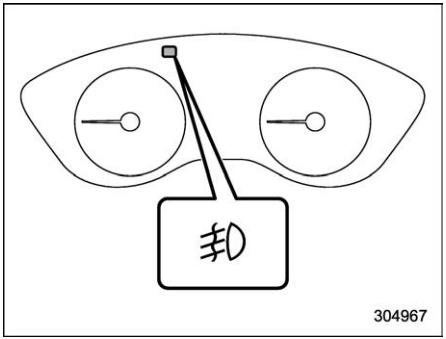

Front fog light indicator light

The indicator light located on the combination meter will illuminate when the front fog lights are on.

3-15. Turn Signal Lever

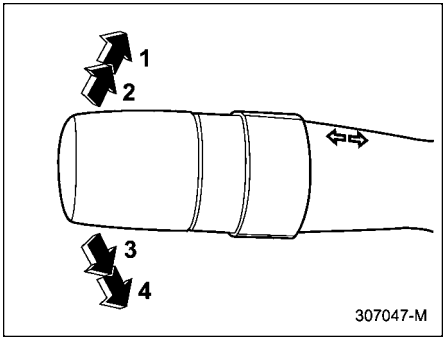

1 Right turn
2 Lane change right signal
3 Lane change left signal
4 Left turn

If the lever does not return after cornering, return the lever to the neutral position by hand.

To signal a lane change, push the turn signal lever up or down slightly and hold it during the lane change. The lever will return automatically to the neutral position when you release it.

■ One-Touch Lane Changer

To flash the turn signal and turn signal indicator light three times, push the turn signal lever up or down slightly and immediately release it.

NOTE

The operational/non-operational setting of the one-touch lane changer can be changed by a SUBARU dealer. Contact the nearest SUBARU dealer for details. The setting can also be changed by operating the center information display. For details, refer to "Car settings" ☞P201 (11.6-inch display models) or "Vehicle setting icons" ☞P219 (dual 7.0-inch display models).

3-16. Wiper and Washer

WARNING

In freezing weather, do not use the windshield washer until the windshield is sufficiently warmed by the defroster.

Otherwise the washer fluid can freeze on the windshield, blocking your view.

CAUTION

- **Do not operate the washer continuously for more than 10 seconds, or when the washer fluid tank is empty. This may cause overheating of the washer motor. Check the washer fluid level frequently, such as at fuel stops.**
- **Do not operate the wipers when the windshield is dry. This may scratch the glass, damage the blade rubbers and might cause the wiper motor to fail. Before operating the wiper on a dry windshield, always use the windshield washer.**
- **In freezing weather, be sure that the blade rubbers are not frozen to the windshield or rear window before switching on the wipers. Attempting to operate the wiper with the blade rubbers frozen to the window glass could cause not only the blade rubbers to be damaged but also might cause the wiper motor to fail. If the blade rubbers are frozen to the window glass, be sure to operate the defroster or windshield wiper deicer (if equipped) or rear window defogger before turning on the wiper.**
- **If the wipers stop during operation because of ice or some other obstruction on the window, this might cause the wiper motor to fail even if the wiper switch is turned off. If this occurs, promptly stop the vehicle in a safe location, turn the ignition switch to the "LOCK"/"OFF" position and clean the window glass to allow proper wiper operation.**
- **Use clean water if windshield washer fluid is unavailable. In areas where water freezes in winter, use SUBARU Windshield Washer Fluid or the equivalent. Refer to "Windshield Washer Fluid" ☞P472.**

  Also, when driving the vehicle when there are freezing temperatures, use non-freezing type wiper blades.
- **Do not clean the wiper blades with gasoline or a solvent, such as paint thinner or benzine. This will cause deterioration of the wiper blades.**

NOTE

- **The windshield wiper motor is protected against overloads by a circuit breaker. If the motor operates continuously under an unusually heavy load, the circuit breaker may trip to stop the motor temporarily. If this happens, park your vehicle in a safe location, turn off the wiper switch, and wait for approximately 10 minutes. The circuit breaker will reset itself, and the wipers will again operate normally.**
- **Clean your blade rubbers and window glass periodically with a washer solution to prevent streaking, and to remove accumulations of road salt or road film. Operate the windshield washer for at least 1 second so that**

washer solution will be sprinkled all over the windshield or rear window.

- **Grease, wax, insects, or other material on the windshield or the wiper blade results in jerky wiper operation and streaking on the glass. If you cannot remove the streaks after operating the windshield washer or if the wiper operation is jerky, clean the outer surface of the windshield and rear window using a sponge or soft cloth with a neutral detergent or mild-abrasive cleaner. Do not, however, use detergent to clean the blade rubbers. Use only a sponge or soft cloth (and no neutral detergent or mild abrasive cleaner) when you clean the blade rubbers. If you wipe the rubber of the blade strongly, the black coating component will peel off, which will cause the wiper to judder. Also, after wiping it off, check that the rubber has not come loose. After cleaning the window glass and wiper blade rubbers, be sure to rinse them with clean water. Rinse the window until the water does not form beads on the glass. This indicates that the glass is clean.**
- **If you cannot eliminate the streaking even after following this procedure, replace the wiper blades (or blade rubbers) with new ones. For replacement instructions, refer to "Replacement of Wiper Blades" ☞P473.**

■ Windshield Wiper and Washer Switches

The wiper operates only when the ignition switch is in the "ON" position.

▼ **Windshield wipers**

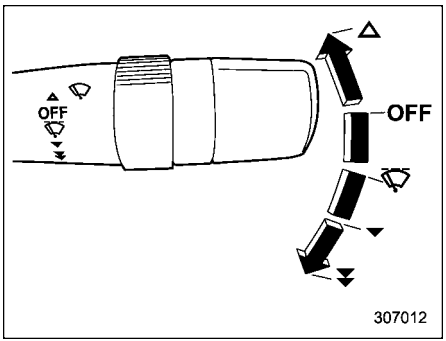

△ : Mist (for a single wipe)
OFF : Off
: Intermittent
▼ : Low speed
▼▼ : High speed

To turn the wipers on, push the wiper control lever down.

To turn the wipers off, return the lever to the "OFF" position.

For a single wipe of the wipers, push the lever up. The wipers operate until you release the lever.

▼ **Wiper intermittent time control**

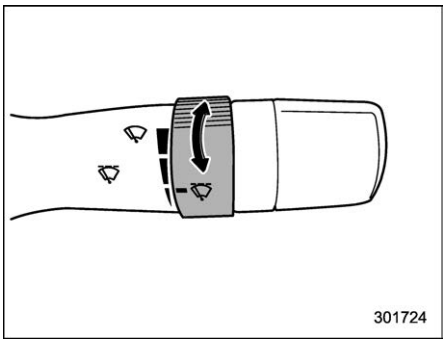

When the wiper switch is in the "" position, turn the dial to adjust the operating interval of the wiper. The operating interval can be adjusted in several steps from the shortest interval to the longest.

– CONTINUED –

▼ Windshield washer

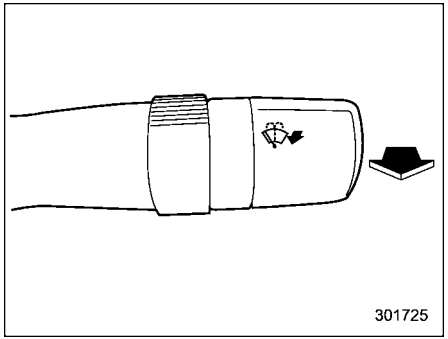

To wash the windshield, pull the wiper control lever toward you. The washer fluid sprays until you release the lever. The wipers operate while you pull the lever.

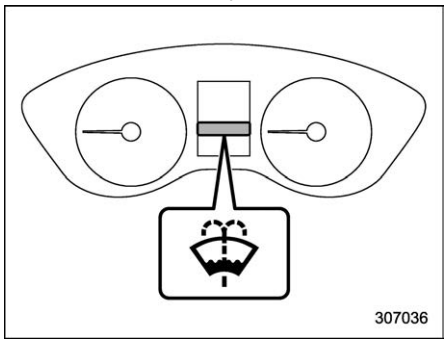

Windshield washer fluid warning light

NOTE

The windshield washer fluid warning light appears when the washer fluid level in the tank has dropped to the lower limit. If the warning light appears, refill the tank with fluid. For the tank refilling method, refer to "Windshield Washer Fluid" ☞P472.

■ Rear Window Wiper and Washer Switch

The wiper operates only when the ignition switch is in the "ON" position.

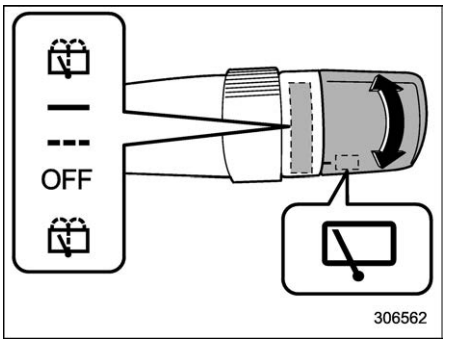

: Washer (accompanied by wiper operation)
▬: Continuous
▬▬▬: Intermittent
OFF: Off
: Washer (accompanied by wiper operation)

▼ Rear wiper

To turn the rear wiper on, turn the knob switch upward.

To turn the wiper off, return the knob switch to the "OFF" position.

With the switch turned to the "▬▬▬" position, the rear wiper will operate intermittently at intervals corresponding to the vehicle speed. In this position, when you move the select lever to the "R" position, the rear wiper will switch to continuous operation. When you move the select lever from the "R" (reverse) position to another position, the rear wiper will return to intermittent operation.

Reverse gear interlocked rear wiper:

Even if the rear wiper switch is in the "OFF" position, if the front windshield wiper is operating continuously, the rear wiper will operate intermittently when you move the select lever to the "R" (reverse) position.

The factory setting (default setting) of the reverse gear interlocked rear wiper is as follows.

- U.S.-spec. models: Non-operational
- Other models: Operational

This setting can be changed by a SUBARU dealer. We recommend that you consult your SUBARU dealer for details.

CAUTION

Do not attach anything that disturbs the rear wiper operation on the rear gate. Doing so may damage the rear wiper when it operates.

▼ **Washer**

To wash the rear window while the rear wiper is operating, turn the knob switch upward to the "" position. The washer fluid sprays until you release the knob.

To wash the rear window when the rear wiper is not in use, turn the knob switch downward to the "" position. The washer fluid sprays and the wiper operates until you release the knob.

Rear view camera washer (if equipped):

The rear view camera washer also operates while the rear window washer is operating.

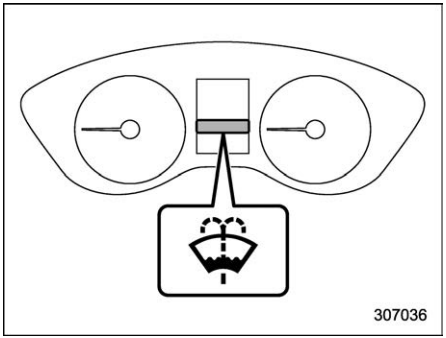

Windshield washer fluid warning light

NOTE

The windshield washer fluid warning light appears when the washer fluid level in the tank has dropped to the lower limit. If the warning light appears, refill the tank with fluid. For the tank refilling method, refer to "Windshield Washer Fluid" ☞P472.

3-17. Defogger and Deicer

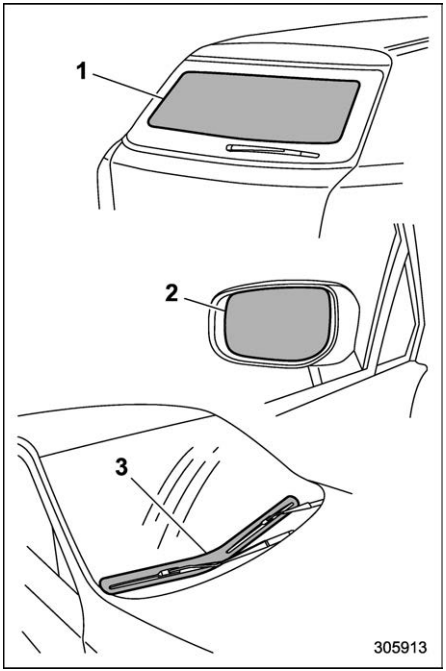

1 Rear window defogger
2 Outside mirror defogger (if equipped)
3 Windshield wiper deicer (if equipped)

– CONTINUED –

The defogger and deicer system is activated only when the ignition switch is in the “ON” position.

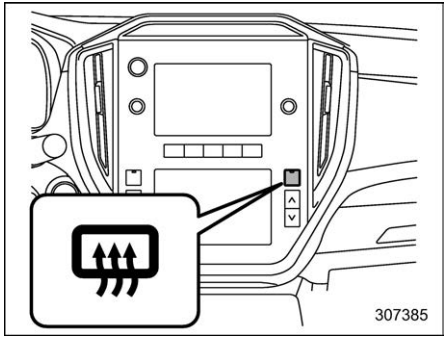

Defogger button (dual 7.0-inch display models)

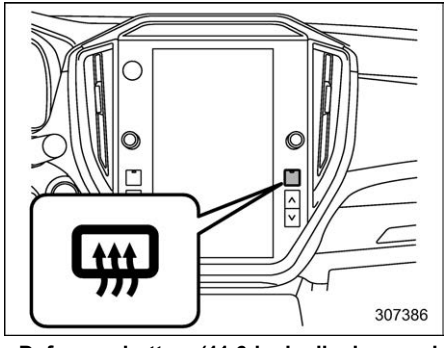

Defogger button (11.6-inch display models)

To activate the defogger and deicer system, press the defogger button. The rear window defogger, outside mirror defogger and windshield wiper deicer are activated simultaneously. The indicator light on the defogger button illuminates while the defogger and deicer system is activated.

To turn them off, press the defogger button again. They also turn off when the ignition switch is turned to the “ACC” or “LOCK”/ “OFF” position.

The defogger and deicer system will automatically shut off after approximately 15 minutes. If the rear window and outside mirrors have been cleared and the windshield wiper blade rubbers have been deiced completely before that time, press the defogger button to turn them off. If defrosting, defogging or deicing is not complete, you have to press the defogger button to turn them on again.

It is possible to set the defogger and deicer system for the continuous operation mode by operating the center information display. For details, refer to “Car settings” ☞P201 (11.6-inch display models) or “Vehicle setting icons” ☞P219 (dual 7.0-inch display models).

CAUTION

- **To prevent the battery from being discharged, do not operate the defogger and deicer system continuously for any longer than necessary.**
- **Do not use sharp instruments or window cleaner containing abrasives to clean the inner surface of the rear window. They may damage the conductors printed on the window.**

NOTE

- **Turn on the defogger and deicer system if the wipers are frozen to the windshield.**
- **If the windshield is covered with snow, remove the snow so that the windshield wiper deicer works effectively.**
- **While the defogger and deicer system is in the continuous operation mode:**
  - **If the vehicle speed remains at 9 mph (15 km/h) or lower for 15 minutes, the windshield wiper deicer system automatically stops operating. However, the rear window defogger system**

and outside mirror defogger system maintain continuous operation in this condition.

– If the vehicle battery voltage drops below the permissible level, continuous operation of the defogger system and deicer system is canceled and the system stops operating.

3-18. Mirrors

Always check that the inside and outside mirrors are properly adjusted before you start driving.

■ Inside Mirror (without Auto-Dimming Function) (If Equipped)

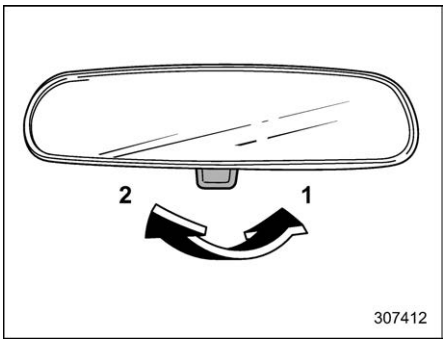

1 Normal position
2 Anti-glare position

Push the tab on the mirror for normal use. To reduce glare from the headlights of the vehicle behind you, pull the tab to the anti-glare position.

■ Auto-Dimming Mirror (If Equipped)

WARNING

To ensure safety, always adjust the mirrors and operate the switch before driving the vehicle. Perform the automatic dimming on/off operation only when necessary. Otherwise, an unexpected accident may occur.

CAUTION

- **When cleaning the mirror, use a paper towel or similar material dampened with glass cleaner. Do not spray glass cleaner directly on the mirror because that may cause the liquid cleaner to enter the mirror housing and damage the mirror.**
- **Sensors detecting brightness are located in front of and behind the mirror. Do not attach any object such as a sticker on the sensor areas or put any object over the mirror.**

– CONTINUED –

▼ How to use the auto-dimming mirror

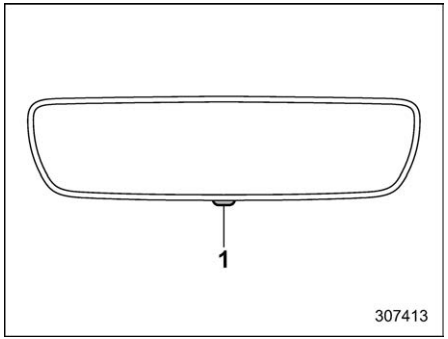

1 ON/OFF switch

1. Move the main body of the auto-dimming mirror and adjust the position so that you can view the rearward direction sufficiently.
2. Press the automatic dimming on/off switch to turn the automatic dimming function on or off. The automatic dimming function is enabled when the switch's green LED indicator is on.

NOTE

- **Sensors are located in front of and behind the mirror.**
- **Even with the mirror in the automatic dimming mode, the mirror surface turns bright if the select lever is shifted into the "R" position. This is to ensure good rearward visibility during reversing.**

■ Auto-Dimming Mirror/Compass (If Equipped)

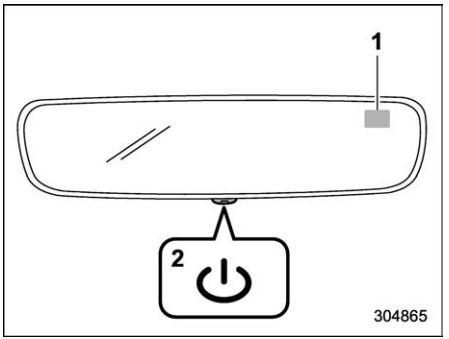

1 Compass
2 Switch

During nighttime driving, the auto-dimming feature senses distracting glare from vehicle headlights behind you and automatically dims to eliminate the glare and preserve your vision.

▼ To Operate the Auto-Dimming Feature

Press the "⏻" switch to turn the auto-dimming feature on/off. The auto-dimming feature is enabled when the switch's green LED indicator is on. The auto-dimming feature will default to on with each ignition cycle.

▼ To Operate the Compass Feature

1. To turn the compass feature on/off, press and hold the "⏻" switch for more than 3 seconds or until the display turns on/off. The compass feature will default to on with each ignition cycle.
2. If the display reads "C", slowly drive the vehicle in circles until compass is calibrated.

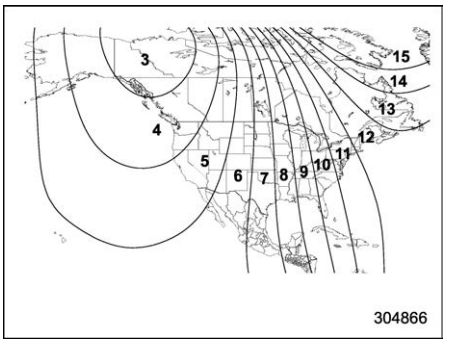

Compass calibration zones

3. To adjust for compass zone variance:
   (1) Find your current location and zone number on the map.
   (2) Press and hold the "⏻" switch for more than 6 seconds or until a zone number appears in the display.
   (3) Once the zone number appears in the display, toggle the "⏻" switch again until your current location zone number appears. After you stop pressing the switch, your new zone number will be saved. Within a few seconds, the display will show a compass direction.
4. If the vehicle's magnetics have changed or if the compass appears inaccurate, recalibrate the compass. Press and hold the "⏻" switch for more than 9 seconds or until a "C" appears in the display. Once a "C" appears in the display, slowly drive the vehicle in circles until compass is calibrated.

■ Auto-Dimming Mirror/Compass with HomeLink® (If Equipped)

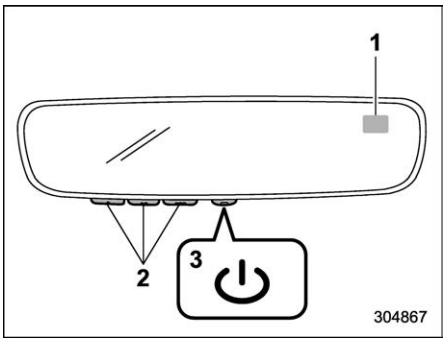

1 Compass
2 HomeLink® buttons
3 Switch

During nighttime driving, the auto-dimming feature senses distracting glare from vehicle headlights behind you and automatically dims to eliminate the glare and help preserve your vision.

▼ To Operate the Auto-Dimming Feature

Press the "⏻" switch to turn the auto-dimming feature on/off. The auto-dimming feature is enabled when the switch's green LED indicator is on. The auto-dimming feature will default to on with each ignition cycle.

▼ To Operate the Compass Feature (if equipped)

1. To turn the compass feature on/off, press and hold the "⏻" switch for more than 3 seconds or until the display turns on/off. The compass feature will default to on with each ignition cycle.
2. If the display reads "C", slowly drive the vehicle in circles until compass is calibrated.

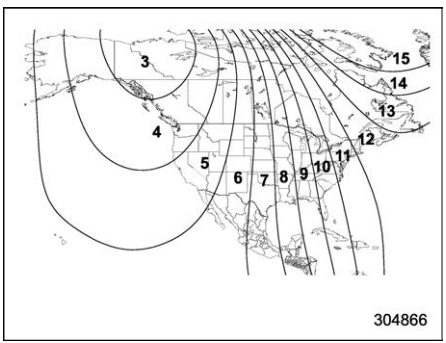

Compass calibration zones (U.S.)

– CONTINUED –

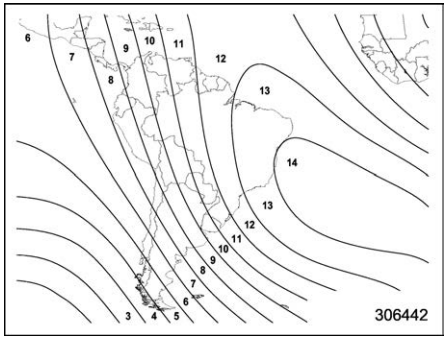

Compass calibration zones (South America)

3. To adjust for compass zone variance:
   (1) Find your current location and zone number on the map.
   (2) Press and hold the "⏻" switch for more than 6 seconds or until a zone number appears in the display.
   (3) Once the zone number appears in the display, toggle the "⏻" switch again until your current location zone number appears. After you stop pressing the switch, your new zone number will be saved. Within a few seconds, the display will show a compass direction.
4. If the vehicle's magnetics have changed or if the compass appears inaccurate, recalibrate the compass. Press and hold the "⏻" switch for more than 9 seconds or until a "C" appears in the display. Once a "C" appears in the display, slowly drive the vehicle in circles until compass is calibrated.

▼ HomeLink® Wireless Control System

The HomeLink® Wireless Control System provides a convenient way to replace up to three hand-held radio frequency remotes used to activate devices such as gate operators, garage door openers, entry door locks, security systems, even home lighting. The below steps are generic programming instructions; for Genie and Sommer garage door openers please go directly to the HomeLink® website. Additional information and programming videos can be found at www.HomeLink.com and www.youtube.com/HomeLinkGentex.

⚠ CAUTION

- **Before programming HomeLink® to a garage door opener or gate operator, make sure that people and objects are out of the way of the device to prevent potential harm or damage.**
- **When programming a garage door opener, it is advised to park outside of the garage.**
- **Do not use HomeLink® with any garage door opener that lacks safety stop and reverse features as required by U.S. federal safety standards (this includes any garage door opener model manufactured before April 1, 1982). A garage door that cannot detect an object signaling the door to stop and reverse does not meet current U.S. federal safety standards.**
- **It is also recommended that a new battery be placed in the hand-held remote (garage door opener remote) of the device for quicker and more accurate training.**
- **Turn the ignition switch to the "ON" or "ACC" position before programming and/or operating HomeLink®.**
- **Keep the hand-held remote (garage door opener remote) of the device you are programming for use in other vehicles as well as for future HomeLink® programming.**

- **For security reasons, when transferring ownership of your vehicle, it is recommended to delete the programmed HomeLink® buttons. Refer to "Erasing HomeLink® buttons" ☞P251.**

▽ Programming a New HomeLink® button

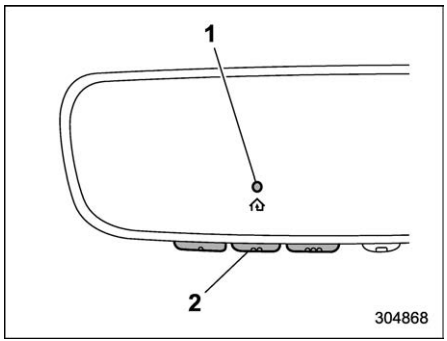

1 Indicator Light
2 HomeLink® buttons

1. Press and release the HomeLink® button that you would like to program. The HomeLink® indicator light will flash orange slowly (if not, refer to "Erasing HomeLink® buttons" ☞P251).

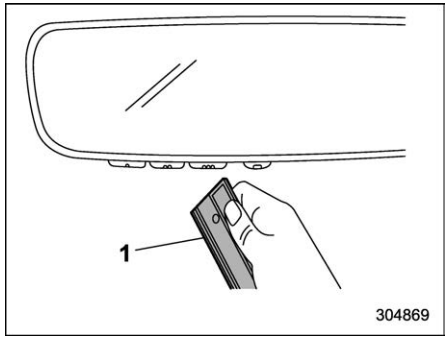

1 Garage door opener remote

2. Position the hand-held remote (garage door opener remote) 1 to 3 inches (2 to 8 cm) away from the HomeLink® button that you would like to program.

NOTE

Some hand-held remotes (garage door opener remotes) may actually train better at a distance of 6 to 12 inches (15 to 30 cm). Keep this in mind if you have difficulty with the programming process.

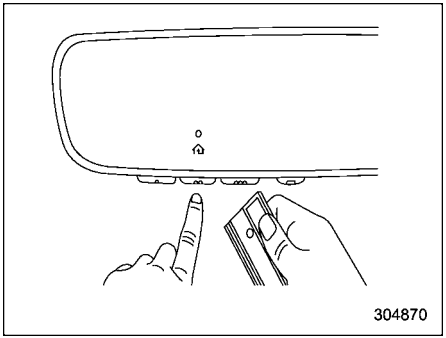

3. While the HomeLink® indicator light is flashing orange, press and hold the hand-held remote button. Continue pressing the hand-held remote button until the HomeLink® indicator light changes from orange to green. You may now release the hand-held remote button.

NOTE

Some devices may require you to replace this "Programming a New HomeLink® button" step 3 with procedures noted in the "Gate Operator / Canadian Programming" section. Refer to "Gate Operator/Canadian Programming" ☞P251.

– CONTINUED –

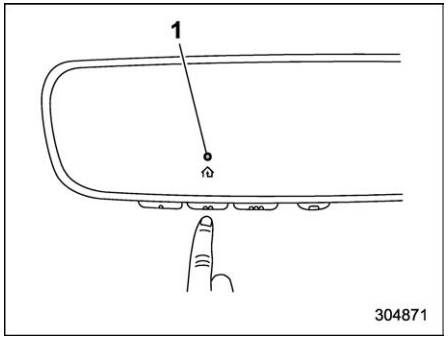

1 Indicator Light

4. Press the HomeLink® button that you would like to program and observe the indicator light.
   - If the indicator light remains constant green, your device should operate when the HomeLink® button is pressed. At this point, if your device operates, programming is complete.
   - If the indicator light rapidly flashes green, firmly press, hold for two seconds and release the HomeLink® button up to three times to complete the programming process. At this point if your device operates, programming is complete. If the device does not operate, continue with the next step of the programming instructions.

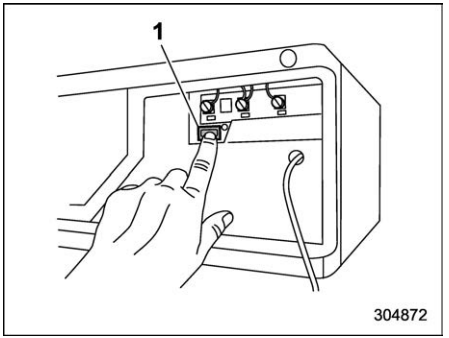

1 “Learn” button

5. At the garage door opener motor, (security gate motor, etc.) locate the “Learn”, “Smart”, or “Program” button. This can usually be found where the hanging antenna wire is attached to the motor-head unit (see the device’s manual to identify this button). The name and color of the button may vary by manufacturer.

NOTE

A ladder and/or second person may simplify the following steps.

6. Firmly press and release the “Learn”, “Smart”, or “Program” button. You now have 30 seconds in which to complete step 7.

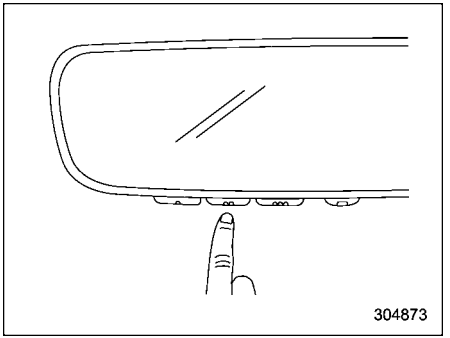

7. Return to the vehicle and firmly press, hold for 2 seconds and release the HomeLink® button up to three times. At this point programming is complete and your device should operate when the HomeLink® button is pressed and released.

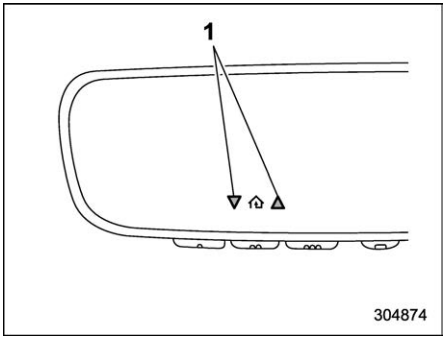

1 Status Indicators

8. If status indicator arrows appear next to the indicator light, please refer to "Garage Door Two-Way Communication" ☞P252.

In the event that there are still programming difficulties or questions, additional HomeLink® information and programming videos can be found at www.HomeLink.com and www.youtube.com/HomeLinkGentex. For Genie and Sommer garage door openers please go directly to the HomeLink® website.

▽ Gate Operator/Canadian Programming

Canadian radio-frequency laws require transmitter remote signals to "time-out" (or quit) after several seconds of transmission, which may not be long enough for HomeLink® to pick up the signal during programming. Similar to this Canadian law, some U.S. gate operators are designed to "time-out" in the same manner. The indicator LED on the hand-held remote will go off when the device times out, indicating that it has finished transmitting.

If you live in Canada or you are having difficulties programming a gate operator or garage door opener by using the programming procedures, replace "Programming a New HomeLink® button" step 3 with the following:

While the HomeLink® indicator light is flashing orange, press and release ("cycle") your device's hand-held remote every two seconds until the HomeLink® indicator light changes from orange to green. You may now release the hand-held remote button.

NOTE

If programming a garage door opener or gate operator, it is advised to unplug the device during the "cycling" process to prevent possible overheating.

Proceed with "Programming a New HomeLink® button" step 4 to complete.

▽ Using HomeLink®

To operate, simply press and release the programmed HomeLink® button. Activation will now occur for the trained device (i.e. garage door opener, gate operator, security system, entry door lock, home/office lighting, etc.). For convenience, the hand-held remote of the device may also be used at any time.

▽ Erasing HomeLink® buttons

To erase programming from the three buttons (individual buttons cannot be erased but can be "reprogrammed" as outlined below), follow the step noted:

Press and hold the two outer HomeLink® buttons for at least 10 seconds. The LED indicator will change from continuously lit to rapidly flashing. Release both buttons. Do not hold for longer than 20 seconds. HomeLink® is now ready to be programmed at any time beginning with "Programming a New HomeLink® button" - step 1.

– CONTINUED –

▽ Reprogramming a Single HomeLink® button

To program a previously trained button, follow these steps:

1. Press and hold the desired HomeLink® button. DO NOT release the button.
2. The indicator light will begin to slowly flash orange after 20 seconds. The HomeLink® button can be released at this point. Proceed with “Programming a New HomeLink® button” - step 3.
3. If you do not complete the programming of a new device to the button, it will revert to the previously stored programming.

▽ Garage Door Two-Way Communication

HomeLink® has the capability of communicating with your garage door opener. HomeLink® can receive and display “closing” or “opening” status messages from compatible garage door opener systems. At any time, HomeLink® can also recall and display the last recorded status communicated by the garage door opener to indicate your garage door being “closed” or “opened”.

HomeLink® has the capability of receiving this communication from the garage door opener at a range up to 820 feet (250 m). Range may be reduced by obstacles such as houses or trees. You may have to slow your vehicle speed to successfully receive the garage door opener communication.

▽ Programming Two-Way Communication

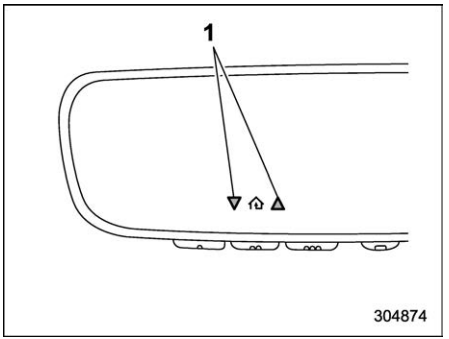

1 Status Indicators

Within 5 seconds after programming a new HomeLink® button, both of HomeLink’s garage door status indicators will flash rapidly green indicating that the garage door two-way communication has been enabled. If your garage door status indicators flashed, two-way communication programming is complete.

If the garage door status indicators do not flash, additional HomeLink® information and programming videos can be found online at www.HomeLink.com and www.youtube.com/HomeLinkGentex.

▽ Using Two-Way Communication

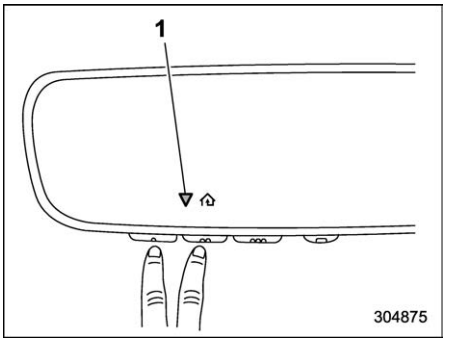

1 Status Indicator

Recall and display (at any time) the last recorded garage door status message communicated to HomeLink® by simultaneously pressing HomeLink® buttons 1 and 2 for 2 seconds. HomeLink® will display the last recorded status for 3 seconds.

If two-way communication programming is successful, HomeLink® will display the status of your garage door opener with arrow indicators (see below).

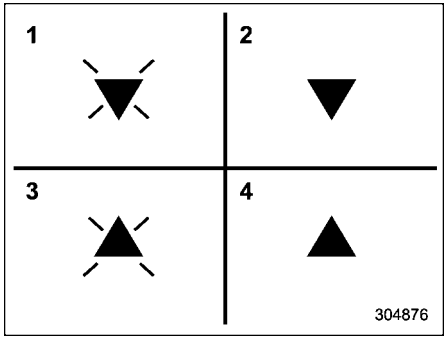

1 Garage Door Opener CLOSING (Blinking Orange)
2 Garage Door Opener CLOSED (Solid Green)
3 Garage Door Opener OPENING (Blinking Orange)
4 Garage Door Opener OPENED (Solid Green)

▽ Certification

In the event that there are still programming difficulties or questions, additional HomeLink® information and programming videos can be found at www.HomeLink.com, www.youtube.com/HomeLinkGentex, or by calling the toll-free HomeLink-hotline at 1-800-355-3515.

- **U.S.-spec. models**

⚠ CAUTION

FCC WARNING

Changes or modifications not expressly approved by the party responsible for compliance could void the user's authority to operate the equipment.

This device complies with FCC rules part 15 and Innovation, Science, and Economic Development Canada RSS-210. Operation is subject to the following two conditions: (1) This device may not cause harmful interference, and (2) This device must accept any interference that may be received including interference that may cause undesired operation. WARNING: The transmitter has been tested and complies with FCC and ISED rules.

Changes or modifications not expressly approved by the party responsible for compliance could void the user's authority to operate the device.

This equipment complies with FCC and ISED radiation exposure limits set forth for an uncontrolled environment. End Users must follow the specific operating instructions for satisfying RF exposure compliance. This transmitter must be at least 20 cm from the user and must not be co-located or operating in conjunction with any other antenna or transmitter.

306210

– CONTINUED –

- **Canada-spec. models**

This device complies with FCC rules part 15 and Innovation, Science, and Economic Development Canada RSS-210. Operation is subject to the following two conditions: (1) This device may not cause harmful interference, and (2) This device must accept any interference that may be received including interference that may cause undesired operation. WARNING: The transmitter has been tested and complies with FCC and ISED rules.

Changes or modifications not expressly approved by the party responsible for compliance could void the user's authority to operate the device.

This equipment complies with FCC and ISED radiation exposure limits set forth for an uncontrolled environment. End Users must follow the specific operating instructions for satisfying RF exposure compliance. This transmitter must be at least 20 cm from the user and must not be co-located or operating in conjunction with any other antenna or transmitter.

306210

Cet appareil est conforme aux règlements de la FCC, section 15, et au CNR-210 d'Innovation, Sciences et Développement économique Canada. Le fonctionnement est assujetti aux deux conditions suivantes : (1) cet appareil ne doit pas causer d'interférences nuisibles et (2) cet appareil doit accepter toute interférence reçue, y compris celle qui pourrait entraîner un dysfonctionnement. MISE EN GARDE : L'émetteur a subi des tests et est conforme aux règlements de la FCC et d'ISDE. Les changements ou modifications non approuvés explicitement par la partie responsable de la conformité pourraient rendre caduque l'autorisation de l'utilisateur de se servir du dispositif.

Cet appareil est conforme aux limites d'exposition aux radiations de la FCC et d'ISDE établies pour un environnement non contrôlé. Les utilisateurs finaux doivent respecter les instructions d'utilisation spécifiques pour satisfaire aux exigences de conformité aux expositions de RF. L'émetteur doit se trouver à 20 cm au minimum de l'utilisateur et ne doit pas être situé au même endroit que tout autre émetteur ou antenne ni fonctionner avec un autre émetteur ou antenne.

306211

HomeLink® and the HomeLink® house are registered trademarks of Gentex Corporation.

WARNING

- **When programming the HomeLink® Wireless Control System, you may be operating a garage door opener or other device. Make sure that people and objects are out of the way of the garage door or other device to prevent potential harm or damage.**
- **Do not use the HomeLink® Wireless Control System with a garage door opener that lacks the safety stop and reverse feature as required by applicable safety standards. A garage door opener which cannot detect an object, signaling the door to stop and reverse, does not meet these safety standards. Using a garage door opener without these features increases risk of serious injury or death. For more information, consult the HomeLink® website at www.homelink.com or call 1-800-355-3515.**

■ Outside Mirrors

▼ Convex mirror (passenger side)

WARNING

Objects look smaller in a convex mirror and farther away than when viewed in a flat mirror. Do not use the convex mirror to judge the distance of vehicles behind you when changing lanes. Use the inside mirror (or glance backwards) to determine the actual size and distance of objects that you view in convex mirror.

CAUTION

Make sure to adjust the mirrors before driving.

▼ Remote control mirror switch

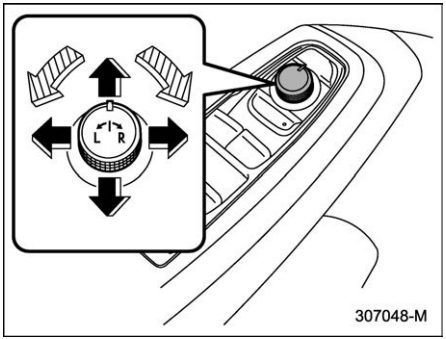

: Select side to adjust

: Direction control

The remote control mirrors operate when the ignition switch is in the “ON” or “ACC” position.

1. Turn the control switch to the side that you want to adjust. “L” is for the left mirror, “R” is for the right mirror.
2. Move the control switch in the direction you want to move the mirror.
3. Return the control switch to the neutral position to prevent unintentional operation.

NOTE

The mirrors can also be adjusted manually.

3-19. Tilt/Telescopic Steering Wheel

WARNING

- **Do not adjust the steering wheel tilt/telescopic position while driving. This may cause loss of vehicle control and result in personal injury.**
- **If the lever cannot be raised to the fixed position, adjust the steering wheel again. It is dangerous to drive without locking the steering wheel. This may cause loss of vehicle control and result in personal injury.**

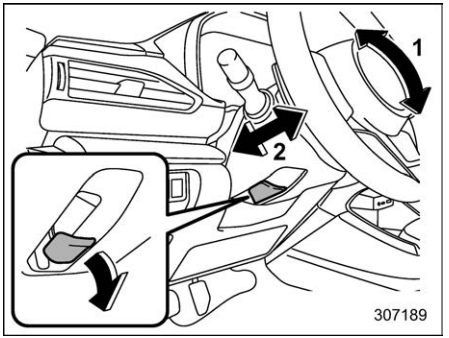

1 Tilt adjustment
2 Telescopic adjustment

1. Adjust the seat position. Refer to “Front Seats” ☞P28.
2. Pull the tilt/telescopic lock lever down.
3. Move the steering wheel to the desired level.
4. Pull the lever up to lock the steering wheel in place.
5. Make sure that the steering wheel is securely locked by moving it up and down, and forward and backward.

■ Heated Steering Wheel System (If Equipped)

The Heated Steering Wheel system warms the steering wheel at a constant temperature.

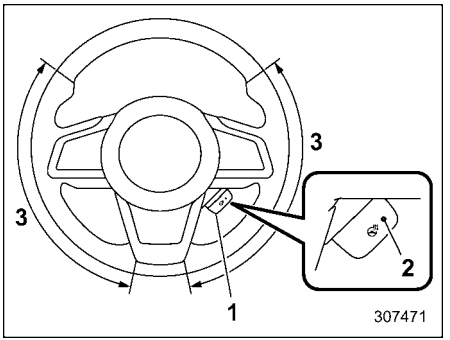

1 Heated Steering Wheel switch
2 Indicator light
3 Heated area

To turn on the Heated Steering Wheel system, pull the Heated Steering Wheel switch when the ignition switch is in the “ON” or “ACC” position. Then the steering wheel will be warmed and the indicator light on the switch will illuminate. To turn off the Heated Steering Wheel system, pull the switch again. Then the indicator light will turn off.

CAUTION

- **Use the Heated Steering Wheel system with the engine running. Otherwise, the battery voltage may drop below the permissible level and it may not be possible to start the engine.**
- **There is a possibility that people with delicate skin may suffer slight burns even at low temperatures if they use the Heated Steering Wheel for a long period of time. When using the Heated Steering Wheel, always be sure to warn the persons concerned.**
- **Do not cover the Heated Steering Wheel with an object such as a steering wheel cover. Doing so may cause the Heated Steering Wheel to overheat.**
- **Do not spill liquid on the steering wheel. If liquid is spilled, wipe it off immediately and dry it before using the Heated Steering Wheel system.**

NOTE

- **If the surface temperature of the steering wheel is approximately above 104°F (40°C) when the switch is turned on, the system will not heat the steering wheel. Then, the indicator light will continue to illuminate.**
- **The Heated Steering Wheel system will automatically turn off approximately 30 minutes after the system has been turned on.**
- **The temperature of the Heated Steering Wheel system cannot be adjusted.**

3-20. Horn

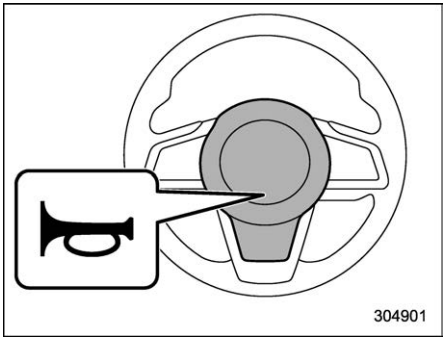

To sound the horn, push the horn pad.

4-1. Ventilator Control 260
Center Ventilators 260
Side Ventilators 260
4-2. Climate Control Panel 260
Dual 7.0-Inch Display Models 261
11.6-Inch Display Models 263
4-3. Automatic Climate Control Operation 265
Sensors 266
4-4. Manual Climate Control 267
Airflow Mode Selection 267
Dynamic Ventilation 268
Temperature Control 269
Fan Speed Control 270
Air Conditioner Control 270
Air Inlet Selection 270
To Turn Off the Climate Control System 271
4-5. Defrosting 271
4-6. Operating Tips for Heater and Air Conditioner 272
Cleaning Ventilator Grille 272
Efficient Cooling after Parking in Direct Sunlight 273
Lubrication Oil Circulation in the Refrigerant Circuit 273
Checking Air Conditioning System before Summer Season 273
Cooling and Dehumidifying in High Humidity and Low Temperature Weather Condition 273
Air Conditioner Compressor Shut-Off When Engine Is Heavily Loaded 273
Refrigerant for Your Climate Control System 273
4-7. Air Filtration System 274
Replacing the Cabin Air Filter 274

4-1. Ventilator Control

■ Center Ventilators

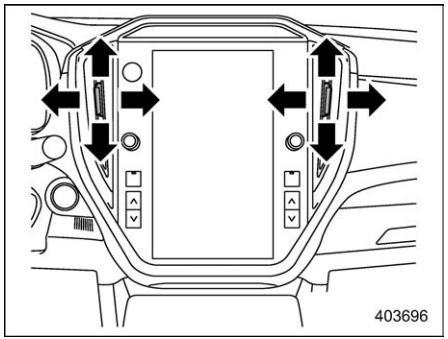

To adjust the airflow direction, move the tab. To close the ventilator, move the tab all the way down.

■ Side Ventilators

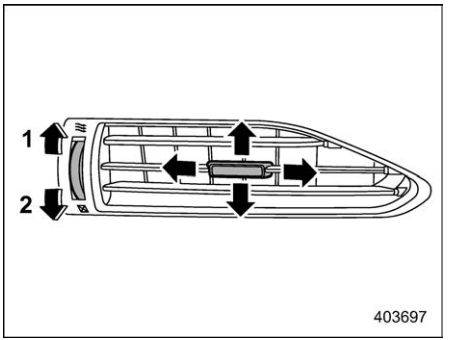

1 Open
2 Close

To adjust the airflow direction, move the tab.

4-2. Climate Control Panel

WARNING

- **The cooling function operates only when the engine is running.**
- **Do not leave children or adults who would normally require the support of others alone in your vehicle. Pets should not be left alone either. On hot, sunny days, temperatures in a closed vehicle could quickly become high enough to cause severe or possibly fatal injuries to people or animals.**

■ Dual 7.0-Inch Display Models

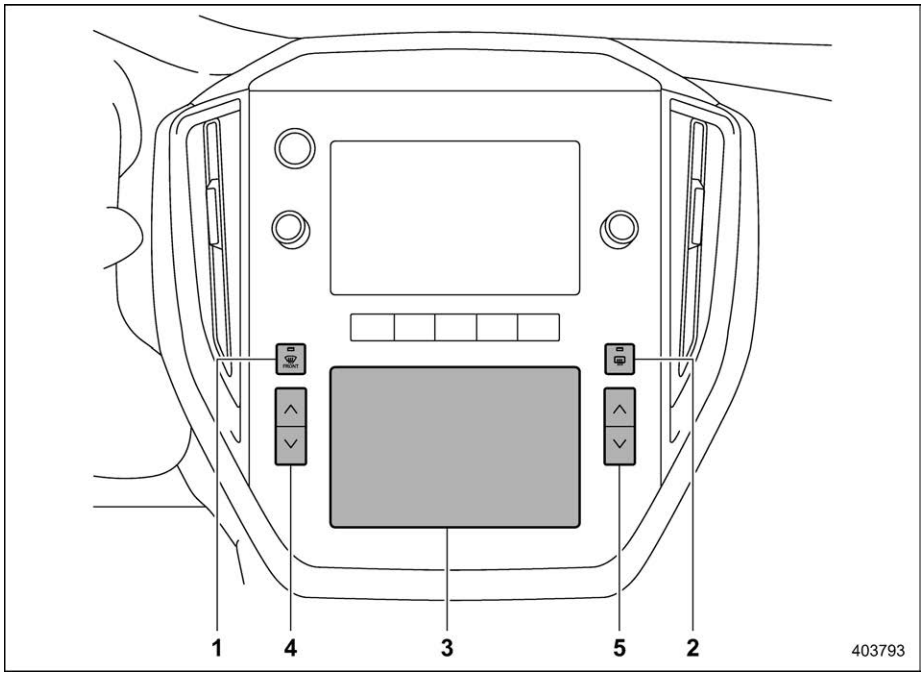

1 Defroster button (Refer to “Defrosting” ☞P271.)
2 Defogger button (Refer to “Defogger and Deicer” ☞P243.)
3 Climate control screen (lower display)
4 Driver’s side temperature control button (Refer to “Temperature Control” ☞P269.)
5 Passenger’s side temperature control button (Refer to “Temperature Control” ☞P269.)

– CONTINUED –

▼ Climate control screen

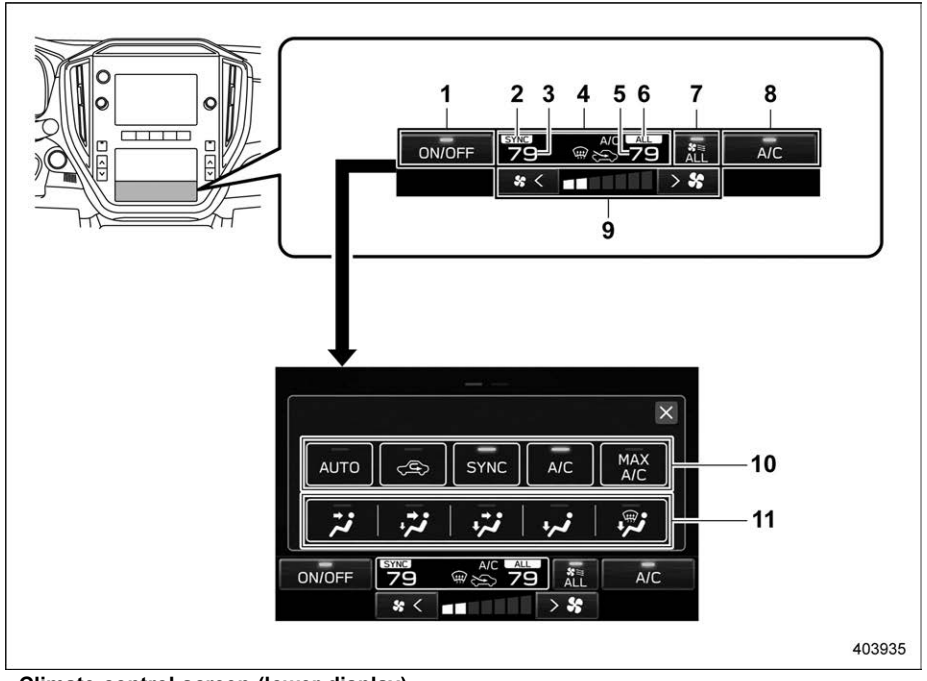

Climate control screen (lower display)

➡: Touch the climate control mode indicator

1 Climate control ON/OFF icon
2 SYNC mode indicator
3 Set temperature indicator (driver's side)
4 Climate control mode indicator
5 Set temperature indicator (passenger's side)
6 Dynamic Ventilation mode indicator
7 Dynamic Ventilation ON/OFF icon
8 Customizable icon*
9 Fan speed control
10 Climate control mode select icon
11 Airflow mode selection screen

*: The customizable icon can be changed to the favorite icon. Refer to "General settings" ☞P213.

■ 11.6-Inch Display Models

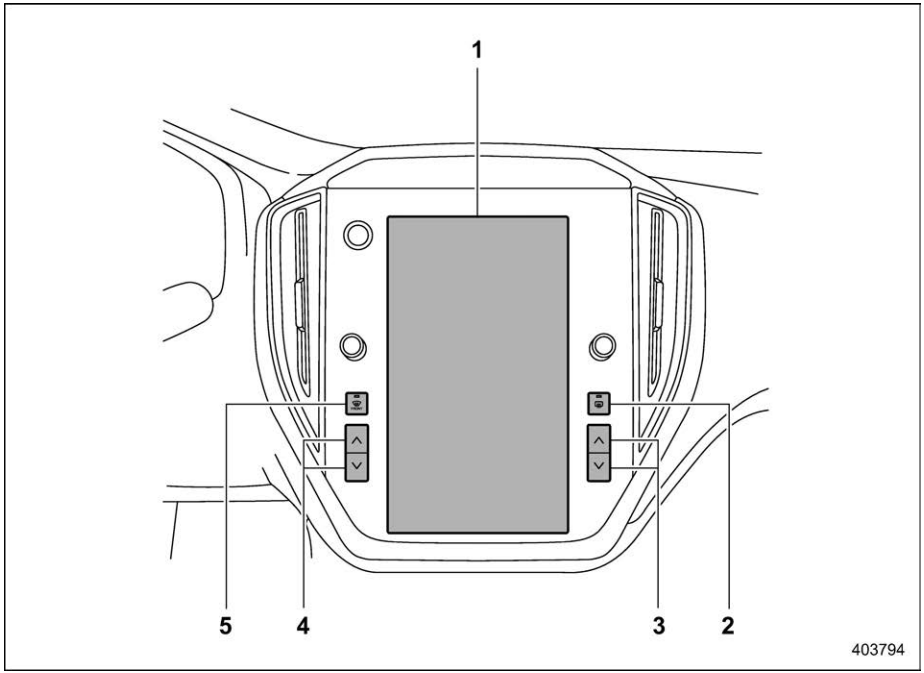

1 Climate control screen
2 Defogger button (Refer to “Defogger and Deicer” ☞P243.)
3 Passenger’s side temperature control button (Refer to “Temperature Control” ☞P269.)
4 Driver’s side temperature control button (Refer to “Temperature Control” ☞P269.)
5 Defroster button (Refer to “Defrosting” ☞P271.)

– CONTINUED –

▼ Climate control screen

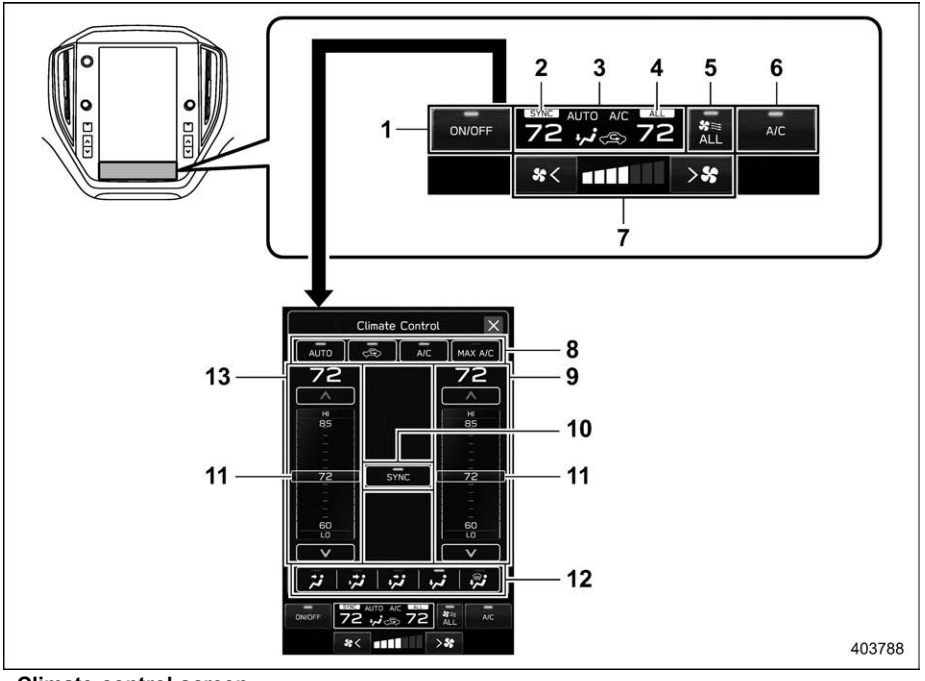

Climate control screen

➡: Touch the climate control mode indicator

1 Climate control ON/OFF icon
2 SYNC mode indicator
3 Climate control mode indicator
4 Dynamic Ventilation mode indicator
5 Dynamic Ventilation ON/OFF icon
6 Customizable icon*
7 Fan speed control
8 Climate control mode select icon
9 Temperature control screen (passenger's side)
10 SYNC icon
11 Temperature control bar
12 Airflow mode selection screen
13 Temperature control screen (driver's side)

*: The customizable icon can be changed to the favorite icon. Refer to "General settings" ☞P196.

4-3. Automatic Climate Control Operation

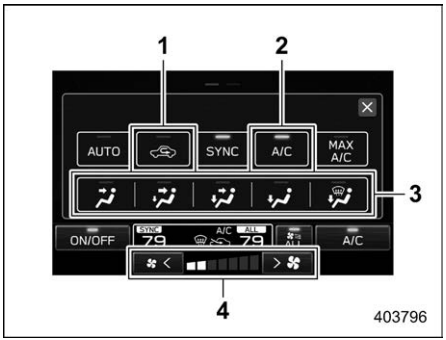

Climate control screen (dual 7.0-inch display models)

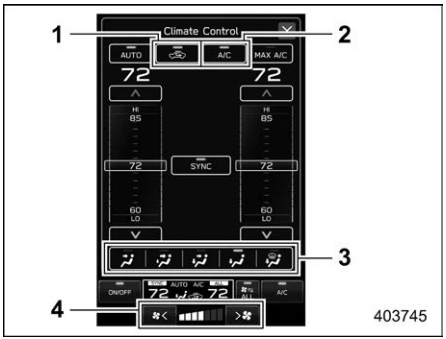

Climate control screen (11.6-inch display models)

1 Air inlet selection
2 Air conditioner
3 Airflow mode
4 Fan speed

When the auto mode is selected, the following functions are automatically controlled.

- Airflow mode
- Air inlet selection
- Air conditioner operation
- Fan speed

To activate this mode, perform the following.

"AUTO" is displayed on the customizable icon:

1. Touch "AUTO".
2. Set the preferred temperature. Refer to "Temperature Control" ☞P269.

"AUTO" is not displayed on the customizable icon:

1. Touch the climate control mode indicator.
2. Touch "AUTO".
3. Set the preferred temperature. Refer to "Temperature Control" ☞P269.

NOTE

- **Operate the automatic climate control system when the engine is running.**
- **Even when cooling is not necessary, the air conditioner will automatically turn on if the temperature is set much lower than the current outlet air temperature. Even in this case, the "A/C" indicator light on the climate control screen illuminates.**
- **The air conditioner may not operate in the following cases:**
  - **When the cabin temperature is low**
  - **When the ambient temperature decreases close to 32°F (0°C)**
- **The controllable temperature range may vary depending on the regional specifications of the vehicle.**

– CONTINUED –

- **When “AUTO” is displayed, if you operate the fan speed control or the airflow mode, press the defroster button, or turn on MAX A/C mode, the “AUTO” display will turn off. You can then manually control the system as desired using the climate control screen. To change the system back to auto mode, touch “AUTO”.**

To turn off the climate control system, touch “ON/OFF”.

At this time, the air inlet selection mode will differ depending on the auto mode and manual mode.

- When the air inlet selection is set to auto mode: Outside air circulation
- When the air inlet selection is set to manual mode: No change

When the ignition switch is changed to the “OFF”/“LOCK” or “ACC” position from “ON”, the air inlet mode will automatically change to the outside air mode regardless of whether it is the auto mode or manual mode.

■ Sensors

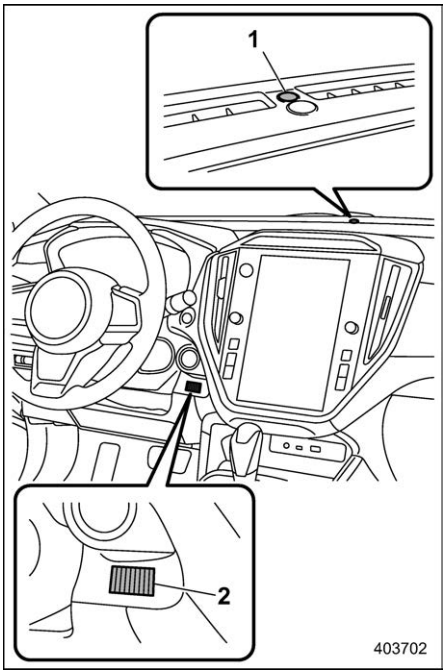

1 Solar sensor
2 Interior air temperature sensor

The automatic climate control system employs several sensors. These sensors are delicate. If they are treated incorrectly and become damaged, the system may not be able to control the interior temperature correctly. To avoid damaging the sensors, observe the following precautions:

– Do not subject the sensors to impact.
– Keep water away from the sensors.
– Do not cover the sensors.

4-4. Manual Climate Control

■ Airflow Mode Selection

Select the preferred airflow mode by the following operation.

1. Touch the climate control mode indicator.
2. Touch the preferred airflow mode.

Airflow modes are as follows.

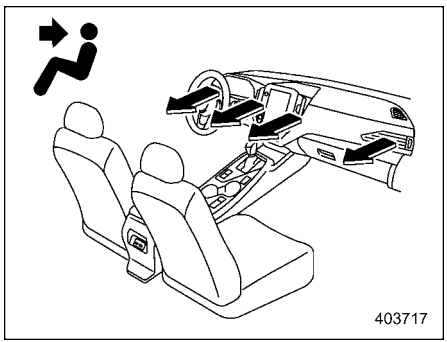

Ventilation: Instrument panel outlets

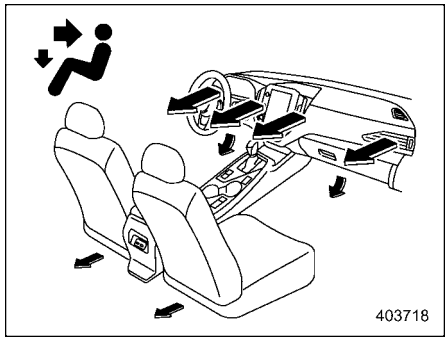

Ventilation 2: Instrument panel outlets and foot outlets

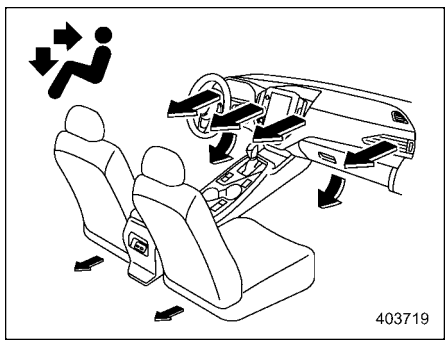

Bi-level: Instrument panel outlets and the foot outlets

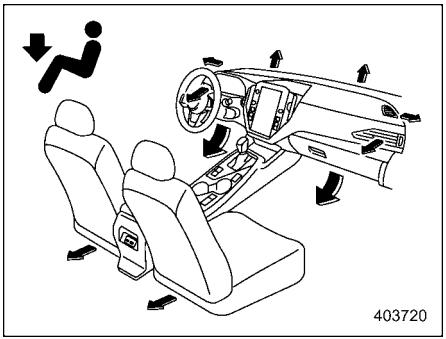

Heat: Foot outlets, both side outlets of the instrument panel and some through windshield defroster outlets (A small amount of air flows to the windshield and both side windows to prevent fogging.)

– CONTINUED –

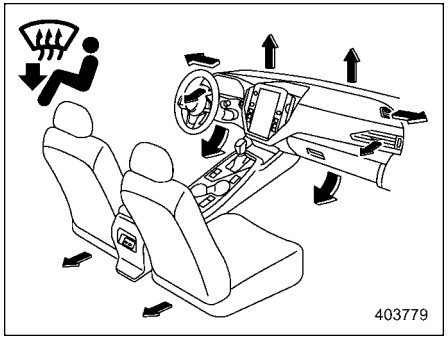

Heat-def: Windshield defroster outlets, foot outlets and both side outlets of the instrument panel

■ Dynamic Ventilation

Dynamic Ventilation is a system that uses sensors and other technology to judge that someone is sitting in the front passenger seat or rear seat and prioritizes the climate control for these seats when they are occupied.

When the push-button ignition switch is turned to the “ON” position, the climate control system automatically selects the Dynamic Ventilation mode according to where the vehicle occupants are sitting.

“DRIVER” mode (driver’s seat is only occupied):

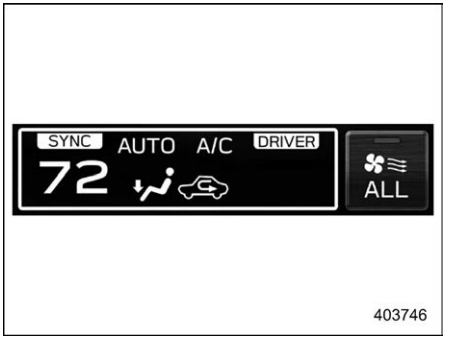

When the climate control system judges that the driver is the only vehicle occupant, “DRIVER” is displayed on the screen and the system directs the airflow only to the driver. To cancel the airflow “DRIVER” mode, touch the “ALL” icon, and “ALL” will be displayed instead of “DRIVER”, and airflow will be directed to all the seats.

“FRONT” mode (driver’s seat and front passenger’s seat are occupied):

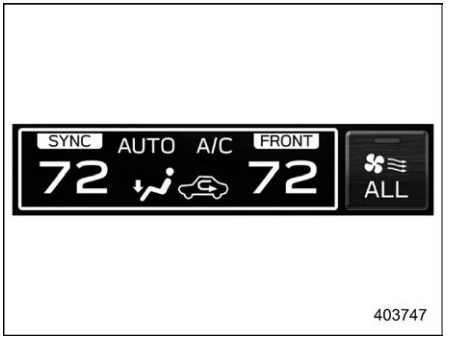

When the climate control system judges that the driver’s and passenger’s seats are occupied, “FRONT” is displayed on the screen and the system directs the airflow to the driver and front passenger. To cancel the airflow “FRONT” mode, touch the “ALL” icon, and “ALL” will be displayed instead of “FRONT”, and airflow is directed to all the seats.

"ALL" mode (rear seats are occupied by passengers):

403748

When the climate control system judges that there are passengers occupying the rear seats, "ALL" is displayed on the screen and the system directs the airflow to all vehicle occupants. To cancel the airflow "ALL" mode, touch the "ALL" icon and "DRIVER" or "FRONT" will be displayed on the screen depending on which passenger's seats are occupied and airflow will be directed to the seats depending on the airflow mode.

NOTE

- **Depending on the settings of the climate control system or other factors affecting the temperature inside the vehicle, the operation of the Dynamic Ventilation mode for occupants may differ from the operation displayed on the screen.**
- **The climate control system judges that the front passenger's seat is occupied by detecting such things as the fastening of the seatbelt, opening or closing of the door, and operation of the passenger's side temperature setting controls.**
- **If "FRONT" is displayed on the screen when the front passenger's door is opened and then closed and the climate control system subsequently judges that the front passenger's seat is not occupied, the screen will display "DRIVER" when the vehicle speed reaches approximately 13 mph (20 km/h).**
- **The climate control system judges that there are passengers occupying the rear seats according to the opening and closing of the rear doors. However, touching "ALL" icon will turn off the function that judges whether the rear doors are open or closed. To turn the function on again, turn the ignition switch to the "OFF"/"LOCK" position for approximately one hour.**
- **The system may not be able to judge the presence of passengers accurately, in which case this function may not operate properly.**

■ Temperature Control

Perform the following operation to regulate the temperature of airflow from the air outlets.

Temperature control buttons:

Press the temperature control button to the blue side (cool) or the red side (warm).

Temperature control screen (11.6-inch display models):

1. Touch the climate control mode indicator.
2. Select the preferred temperature by the following operation.
   - Touch and move the temperature control bar.
   - Touch the "∧"/"∨".
   - Touch the preferred temperature in the temperature control screen.

▼ MAX A/C mode

For quicker cooling, touch "MAX A/C" on the climate control mode select icon or customizable icon.

When the MAX A/C mode is on, the following settings will be changed auto-

– CONTINUED –

matically.

- The air conditioner will turn on.
- The temperature will be set on the lowest.
- The fan speed will be set on the maximum speed.
- The air inlet will be set to the recirculation mode.
- The airflow mode setting will be set to the ventilation mode.

To turn off the MAX A/C mode and return to the previous setting, touch “MAX A/C” again.

NOTE

For models with the Driver Monitoring System, MAX A/C mode will be canceled if the Driver Monitoring System completes user recognition again while MAX A/C mode is in use.

▼ SYNC mode

When the SYNC mode is turned on, both the driver’s and passenger’s side temperatures are synchronized using the driver’s side temperature control button and temperature control screen.

- If “SYNC” is displayed on the customizable icon, touch “SYNC” to turn the SYNC mode on or off.
- If a customizable icon other than “SYNC” is displayed, touch the climate control mode indicator. Then touch “SYNC” to turn the SYNC mode on or off.

When the SYNC mode is on, the SYNC mode indicator will be displayed. Touch “SYNC” again, press the passenger’s side temperature control button or operate the passenger’s side temperature control bar to cancel the SYNC mode. When the SYNC mode is off, the SYNC mode indicator will no longer be displayed. In this case, temperature control on the driver’s side and passenger’s side will be separated. The temperature will be controlled individually using the driver’s and passenger’s temperature control button and the driver’s and passenger’s temperature control bar.

■ Fan Speed Control

Select the preferred fan speed by touching [✱<] or [>✱] on the climate control screen.

■ Air Conditioner Control

The air conditioner operates only when the engine is running.

Perform the following operation while the fan is in operation to turn on the air conditioner.

- If “A/C” is displayed on the customizable icon, touch “A/C”. When the air conditioner is on, the “A/C” indicator illuminates. And A/C icon will be displayed on the climate control mode indicator.
- If a customizable icon other than “A/C” is displayed, touch the climate control mode indicator. Then touch “A/C” on the climate control mode select icon. When the air conditioner is on, “A/C” indicator illuminates. And A/C icon will be displayed on the climate control mode indicator.

To turn off the air conditioner, touch “A/C” again. The indicator light will turn off or it will be grayed out.

NOTE

For efficient defogging or dehumidifying in cold weather, turn on the air conditioner. However, if the ambient temperature decreases to approximately 32°F (0°C), the air conditioner and dehumidification system may not work properly.

■ Air Inlet Selection

Select the air inlet by touching the air inlet selection icon.

Recirculation mode:

Interior air is recirculated inside the vehicle. This mode is used for the following cases.

- When driving on a dusty road
- When you want cooling performance to increase (for example, in particularly hot weather)

Perform the following operation to select this mode.

- is displayed on the customizable icon:
  (1) Touch .
- is not displayed on the customizable icon:
  (1) Touch the climate control mode indicator.
  (2) Touch on the climate control mode select icon.

will be displayed on the climate control mode indicator.

Outside air circulation mode:

Outside air is drawn into the passenger compartment. This mode is used for the following cases.

- When the road is no longer dusty
- When the interior has cooled to a comfortable temperature

Perform the same operation as the recirculation mode to change the mode. will be displayed on the climate control mode indicator.

WARNING

Continued operation in the recirculation mode may fog up the windows. Switch to the outside air circulation mode as soon as the outside dusty condition clears.

NOTE

When outside air circulation is selected, the system may automatically adjust the air inlet setting depending on such factors as the temperature setting, the temperature inside the vehicle, or conditions outside the vehicle.

■ To Turn Off the Climate Control System

To turn off the climate control system, touch the climate control ON/OFF icon.

4-5. Defrosting

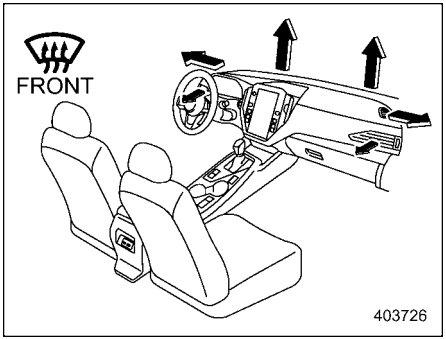

To defrost or dehumidify the windshield and front door windows, perform the following procedures.

- To select the "" mode, press the defroster button.
- To select the "" mode, touch "" on the airflow mode selection screen.

– CONTINUED –

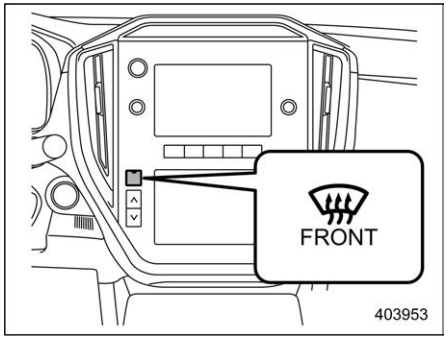

Defroster button (dual 7.0-inch display models)

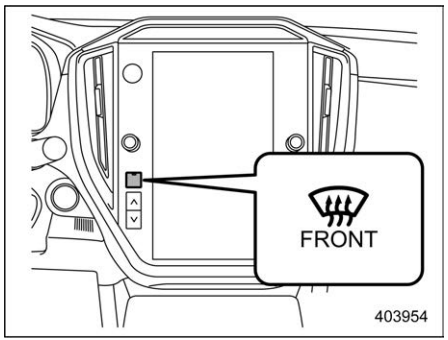

Defroster button (11.6-inch display models)

NOTE

- **When the "" or "" mode is selected, the air conditioner operates automatically regardless of the position of the air conditioner icon to defrost the windshield more quickly. However, the indicator on the air conditioner icon may not illuminate. At the same time, the air inlet selection is automatically set to the outside air circulation mode.**
- **After defrosting the windshield by pressing the defroster button "", pressing the button again returns the system to the setting that had been selected before the defroster was activated.**

4-6. Operating Tips for Heater and Air Conditioner

■ Cleaning Ventilator Grille

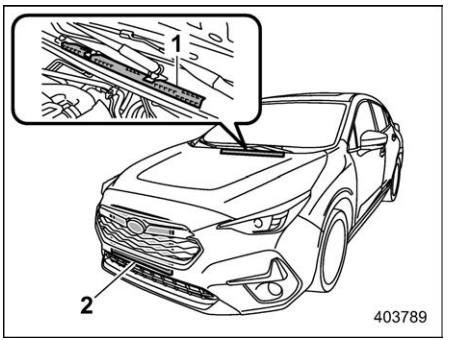

1 Front ventilator inlet grille
2 Condenser

Always keep the front ventilator inlet grille free of snow, leaves, or other obstructions to ensure efficient heating and defrosting. Since the condenser is located in front of the radiator, this area should be kept clean because cooling performance is impaired by any accumulation of insects and leaves on the condenser.

Efficient Cooling after Parking in Direct Sunlight

After parking in direct sunlight, drive with the windows open for a few minutes to allow outside air to circulate into the heated interior. This results in quicker cooling by the air conditioner. Keep the windows closed during the operation of the air conditioner for maximum cooling efficiency.

Lubrication Oil Circulation in the Refrigerant Circuit

Operate the air conditioner compressor at a low engine speed (at idle or low driving speeds) a few minutes each month during the off-season to circulate its oil.

Checking Air Conditioning System before Summer Season

Check the air conditioner unit for refrigerant leaks, hose conditions, and proper operation each spring. Have the air conditioning system checked by your SUBARU dealer.

Cooling and Dehumidifying in High Humidity and Low Temperature Weather Condition

Under certain weather conditions (high relative humidity, low temperatures, etc.) a small amount of water vapor emission from the air outlets may be noticed. This condition is normal and does not indicate any problem with the air conditioning system.

Air Conditioner Compressor Shut-Off When Engine Is Heavily Loaded

To improve acceleration and gas mileage, the air conditioner compressor is designed to temporarily shut off during air conditioner operation whenever the accelerator is fully depressed such as during rapid acceleration or when driving on a steep upgrade.

Refrigerant for Your Climate Control System

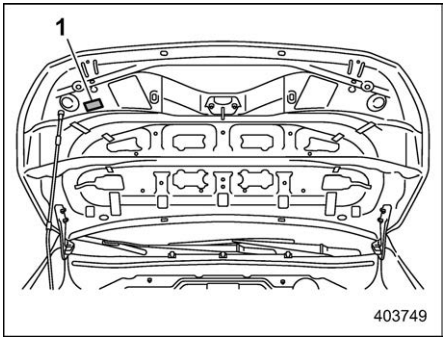

1 Air conditioner label

Your air conditioner uses ozone friendly refrigerant R-1234yf (HFO-1234yf).

Before adding, changing or checking the refrigerant, check the air conditioner label in the location shown in the illustration to confirm which type of refrigerant is used in your vehicle.

Consult your SUBARU dealer for service.

Repairs needed as a result of using the wrong refrigerant are not covered under warranty.

4-7. Air Filtration System

Your vehicle's air conditioning system is equipped with an air filtration system. Replace the cabin air filter according to the replacement schedule found in the "Warranty and Maintenance Booklet". This schedule should be followed to maintain the filter's dust collection ability. Under extremely dusty conditions, the filter should be replaced more frequently. Have your filter checked or replaced by your SUBARU dealer. For replacement, use only a genuine SUBARU air filter kit.

CAUTION

Contact your SUBARU dealer if the following occurs, even if it is not yet time to change the filter.

- **Reduction of the airflow through the vents.**
- **Windshield gets easily fogged or misted.**

NOTE

The filter can influence the air conditioning, heating and defroster performance if not properly maintained.

■ Replacing the Cabin Air Filter

1. Remove the glove box.
   (1) Open the glove box.

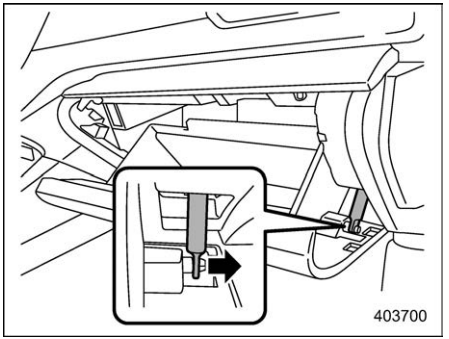

   (2) Remove the damper shaft from the glove box.

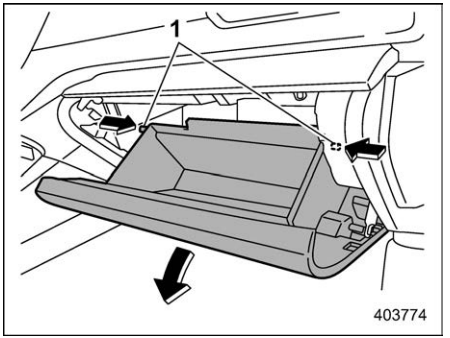

1 Stoppers

   (3) Push both sides of the glove box inward to unlock the stoppers and then pull down the glove box as far as it will go.

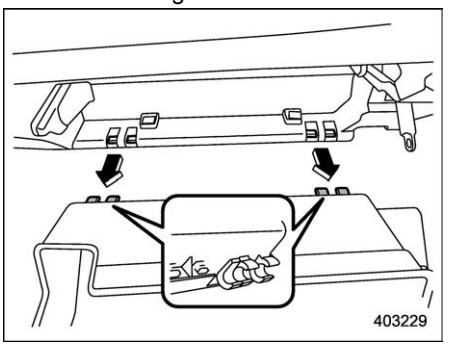

   (4) Pull out the glove box horizontally

and remove the hinge portion. When doing this, be careful not to damage the hinge.

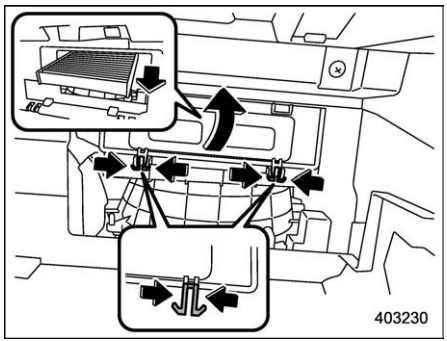

2. Remove the cabin air filter according to the following procedure in order to prevent dust on the air cleaner from falling to the inside of its housing.
   (1) Pinch both tabs and remove the filter cover.
   (2) Gently tilt down the end of the filter and slowly pull it out 0.4 in (1 cm).
   (3) Slowly pull out the rest of the filter.

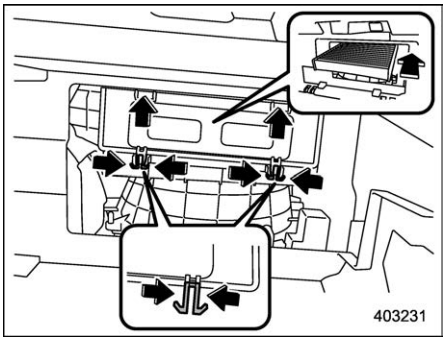

3. Replace the cabin air filter with a new one and then reinstall the cover.

CAUTION

The arrow mark on the filter must point UP.

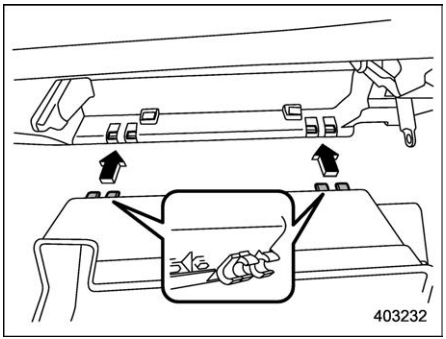

4. Reinstall the glove box, and connect the damper shaft.
5. Close the glove box.

5-1. Antenna 278
Roof Antenna 278

5-2. Audio Set 278

5-1. Antenna

■ Roof Antenna

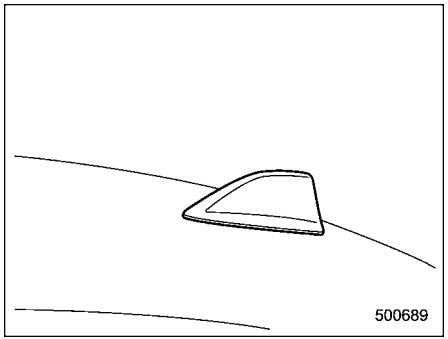

The satellite radio antenna and telematics antenna (if equipped) are installed in the center of the roof at the rear.

5-2. Audio Set

If your vehicle is equipped with a genuine SUBARU navigation system or audio system, refer to the separate navigation/ audio Owner's Manual for details.

6-1. Interior Light 280
Map Lights 280
Dome Light 280
Cargo Area Light 281
OFF Delay Timer 281
6-2. Sun Visors 281
Sun Visor Extension Plate 282
Vanity Mirror with Light (If Equipped) 282
6-3. Storage Compartment 283
Glove Box 283
Center Tray 283
Center Console 284
Center Console Tray 284
Storage Compartment 284
6-4. Cup Holder 285
Front Passenger's Cup Holder 285
Rear Passenger's Cup Holder (If Equipped) 285
6-5. Bottle Holders 286
6-6. Accessory Power Outlets 286
6-7. USB Power Supply 287
How to Use the USB Power Supply 288
6-8. Wireless Charger (If Equipped) 289
How to Use the Wireless Charger 290
Certification for the Wireless Charger 293
6-9. Ashtray (Dealer Option) 294
6-10. Assist Grip 295
6-11. Coat Hook 296
6-12. Floor Mat 296
6-13. Shopping Bag Hook 297
6-14. Cargo Area Cover (If Equipped) 298
Using the Cover 298
To Remove the Cover Housing 298
Stowage of the Cargo Area Cover 299
To Install the Cover Housing 299
6-15. Cargo Tie-Down Hooks 300
6-16. Under-Floor Storage Compartment 300

6-1. Interior Light

CAUTION

When leaving your vehicle, make sure the lights are turned off to avoid battery discharge.

■ Map Lights

▼ Map light switches

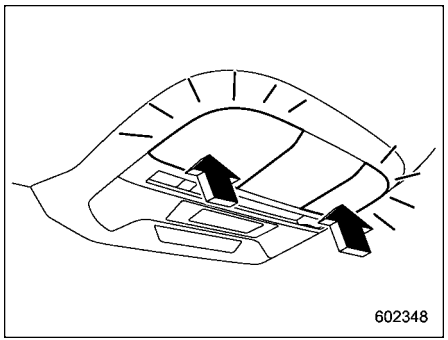

To turn on the map light, press the lens. To turn it off, press the lens again.

CAUTION

Do not keep watching the light source because they use bulbs. Doing so could damage your eyes.

▼ Door interlock switch

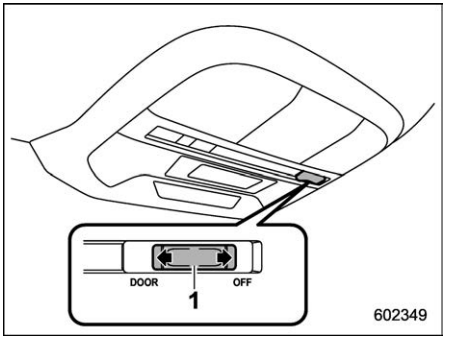

1 Door interlock switch

The door interlock switch has the following positions.

OFF: The map lights do not illuminate automatically in conjunction with a door opening. However, the lights can be turned on manually by pressing the map light lens.

DOOR: The map lights illuminate automatically when any of the doors (other than the rear gate) is opened even while the map light is off. Several seconds after all the doors (other than the rear gate) are closed, the map lights gradually turn off. For details, refer to “OFF Delay Timer” ☞P281.

■ Dome Light

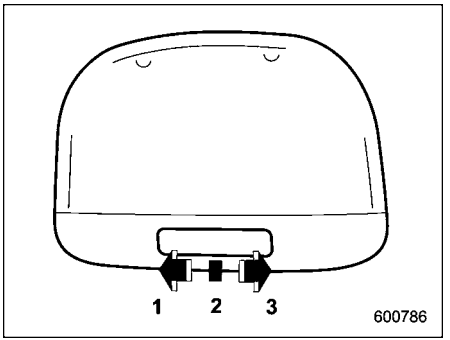

1 ON
2 DOOR
3 OFF

The dome light switch has the following positions.

ON: The light remains on continuously.

OFF: The light remains off.

DOOR: The dome light illuminates automatically in the following cases.

- Any of the doors or the rear gate is opened.
- The doors or the rear gate are unlocked using the keyless access function (if equipped). Refer to “Locking and Unlocking with “Keyless Access” Entry

Function” ☞P110.

- The doors or the rear gate are unlocked using the remote keyless entry system. Refer to “Remote Keyless Entry System” ☞P122.
- The ignition switch is turned from the “ACC” position to the “LOCK”/“OFF” position.

■ Cargo Area Light

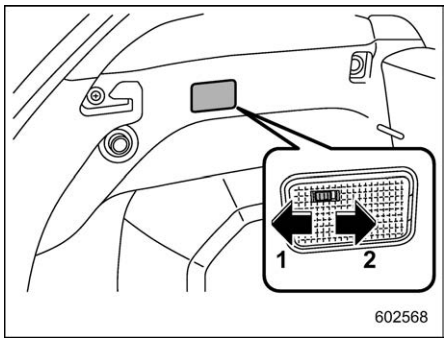

1 DOOR
2 OFF

DOOR: The light illuminates when the rear gate is opened. The light remains illuminated for several seconds and gradually turns off after the rear gate is closed.

OFF: The light remains off.

■ OFF Delay Timer

The following lights have an automatic illumination function.

- Dome light
- Map lights
- Cargo area light

When the door interlock switch is set to the “DOOR” position, the lights will automatically turn on and off depending on the locking and unlocking of the doors, the opening and closing of the doors, as well as the position of the ignition switch.

NOTE

The setting for the period of time in which the lights remain on (OFF delay timer) can be changed by operating the center information display. For details, refer to “Car settings” ☞P201 (11.6-inch display models) or “Vehicle setting icons” ☞P219 (dual 7.0-inch display models). Also, the setting of the lights remain on (OFF delay timer) can be changed by your SUBARU dealer. Contact your SUBARU dealer for details.

6-2. Sun Visors

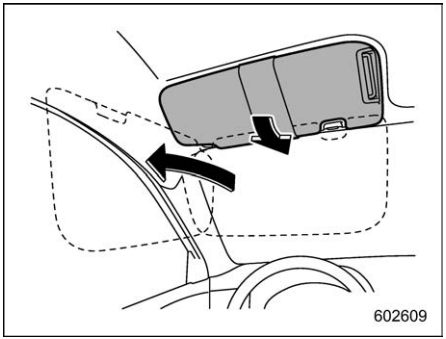

To block out glare, swing down the visors.

To use the sun visor at a side window, swing it down and move it sideways.

– CONTINUED –

Sun Visor Extension Plate

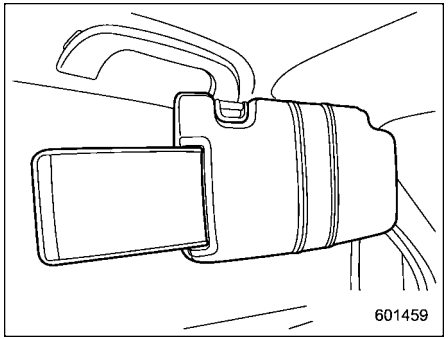

With the sun visor positioned over the side window, you can use the sun visor extension plate to prevent glare through the gap between the sun visor and center pillar. To use the extension plate, pull it toward the rear of the vehicle. When you have finished using it, stow it by pushing it toward the front of the vehicle.

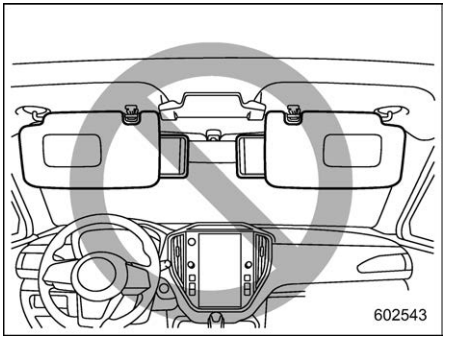

CAUTION

Do not pull out the extension plate with the sun visor positioned over the windshield. The extension plate would obstruct your view of the rearview mirror.

Vanity Mirror with Light (If Equipped)

CAUTION

Keep the vanity mirror cover closed while the car is being driven to avoid being blinded by glare.

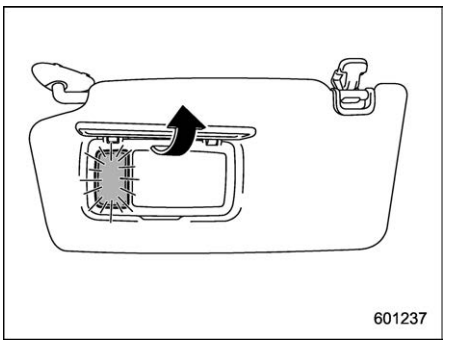

To use the vanity mirror, swing down the sun visor and open the vanity mirror cover.

The lights beside the vanity mirror illuminate when the mirror cover is opened.

NOTE

Use of the vanity mirror light for a long period of time while the engine is not running can cause battery discharge.

6-3. Storage Compartment

CAUTION

- **Always keep the storage compartment closed while driving to reduce the risk of injury in the event of sudden stops or an accident.**
- **Do not store the following items in the storage compartment. Otherwise, it may cause a fire or accident.**
  - **Spray cans, containers with flammable or corrosive liquids or any other dangerous items.**
  - **Plastic or other heat-vulnerable or flammable articles such as a lighter.**

■ Glove Box

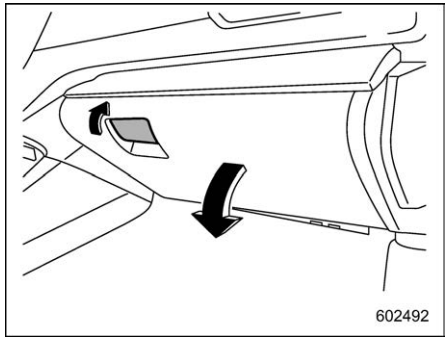

To open the glove box, pull the handle. To close it, push the lid firmly upward.

NOTE

When the instrument panel illumination is on, the light that illuminates the glove box (if equipped) is on. Refer to "Headlights" ☞P230.

■ Center Tray

The center tray is located below the center of the instrument panel.

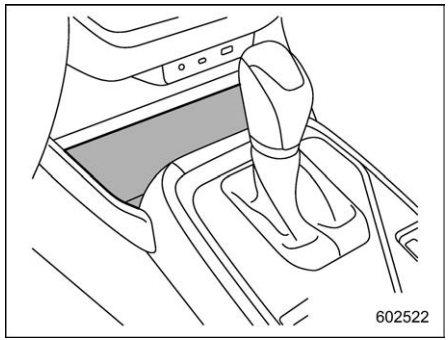

WARNING

For models with the wireless charger:

When the wireless charger is turned on, do not place coins, keys, clips, or other metal objects on the center tray. For details, refer to "Wireless Charger" ☞P289.

CAUTION

Do not use the center tray to hold objects that could roll out of the tray.

– CONTINUED –

- **You may get injured if objects are thrown out of the tray while the vehicle is in motion.**

NOTE

When the instrument panel illumination is on, the light that illuminates the center tray is on. Refer to "Headlights" ☞P230.

■ Center Console

The center console box provides a storage space.

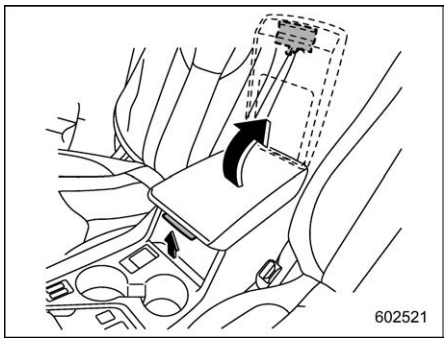

To open the lid, pull up the lock release lever.

■ Center Console Tray

The center console tray is located on the front side of the center console.

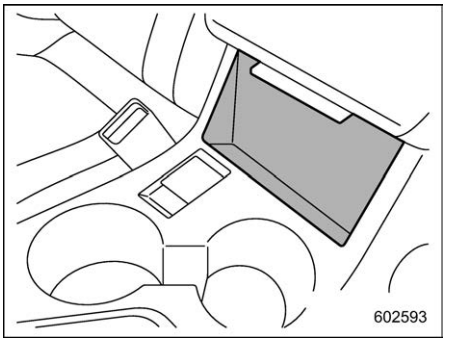

■ Storage Compartment

Apron trim side pockets are located on both sides of the cargo room.

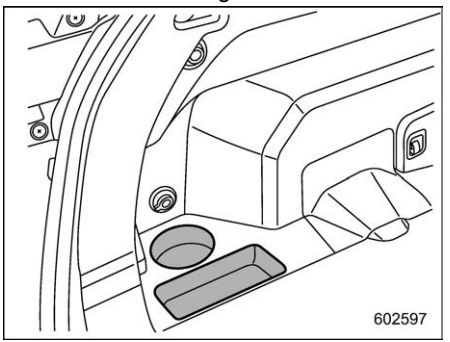

6-4. Cup Holder

CAUTION

Take care to avoid spills. Beverages, if hot, might burn you and/or your passengers. Spilled beverages may also damage upholstery, carpets or audio equipment.

■ Front Passenger's Cup Holder

CAUTION

- **Do not pick up a cup from the cup holder or put a cup in the holder while you are driving, as this may distract you and lead to an accident.**
- **Take care not to spill a beverage on the select lever or any switch(es) in the adjacent area. If the beverage is spilled, it may cause a malfunction of the select lever and/or switch(es).**

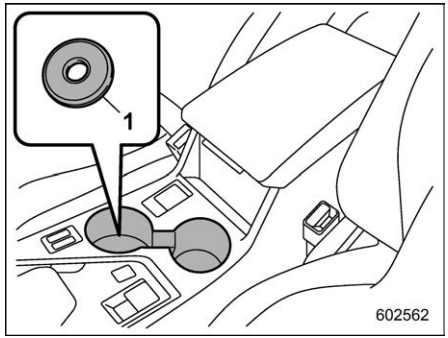

1 Spacer

The dual cup holder is built into the center console.

Place a spacer in it before putting in a small cup or can.

■ Rear Passenger's Cup Holder (If Equipped)

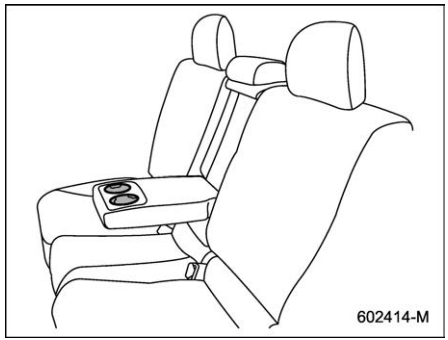

A dual cup holder is built into the armrest.

CAUTION

When a cup containing a beverage is in the cup holder, do not fold down or recline any seat. Otherwise, the beverage could spill while driving and, if the beverage is hot, it could burn you and/or your passengers.

6-5. Bottle Holders

CAUTION

- **Do not pick up a bottle from the bottle holder or put a bottle in the holder while you are driving, as this may distract you and lead to an accident.**
- **When placing a beverage in a bottle holder, make sure it is capped. Otherwise, the beverage could spill when opening/closing the door or while driving and, if the beverage is hot, it could burn you and/or your passengers.**

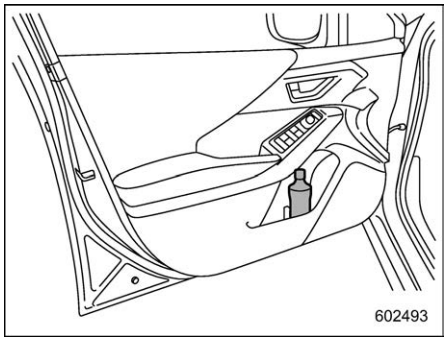

The bottle holder equipped on each door trim can be used to hold beverage bottles and other items.

6-6. Accessory Power Outlets

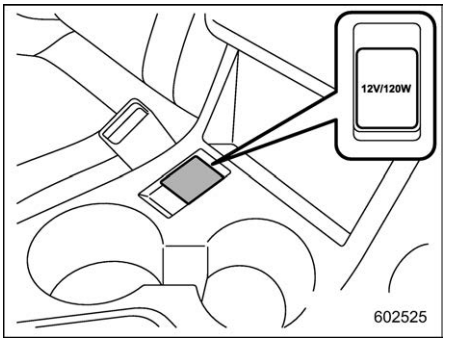

Power outlet

An accessory power outlet is provided in the center console. Electrical power (12 V DC) from the battery is available at any of the outlets when the ignition switch is in either the “ACC” or “ON” position.

You can use an in-vehicle electrical appliance by connecting it to an outlet.

The maximum power rating of an appliance that can be connected is **120 W**. Do not use an appliance which exceeds the indicated wattage for each outlet.

When using appliances connected to two or more outlets simultaneously, the total power consumed by them must not exceed 120 W.

CAUTION

- Do not attempt to use a cigarette lighter in the accessory power outlet.
- Do not place any foreign objects, especially metal ones such as coins or aluminum foil, into the accessory power outlet. That could cause a short circuit. Always put the cap on the accessory power outlet when it is not in use.
- Use only electrical appliances which are designed for 12 V DC.

  The maximum power rating of an appliance that can be connected is 120 W. Do not use an appliance which exceeds the indicated wattage for each outlet.

  When using appliances connected to two or more outlets simultaneously, the total power consumed by them must not exceed 120 W. Overloading the accessory power outlet can cause a short circuit. Do not use double adapters or more than one electrical appliance.
- If the plug on your electric appliance is either too loose or too tight for the accessory power outlet, this can result in a poor contact or cause the plug to get stuck. Only use plugs that fit properly.
- Use of an electric appliance in the accessory power outlet for a long period of time while the engine is not running can cause battery discharge.
- Before driving your vehicle, make sure that the plug and the cord on your electrical appliance will not interfere with your shifting gears and operating the accelerator and brake pedals. If they do, do not use the electrical appliance while driving.

6-7. USB Power Supply

CAUTION

- The specification of a USB terminal that can be used is the Type-A and Type-C. If a different specification of terminal is connected, power supply or charging may not be possible, or the device may malfunction.
- There is a risk that a connected device may malfunction or data may be damaged. The connection of a device shall be performed at your responsibility.
- To avoid an electric shock or a malfunction, observe the following precautions.
  - Do not connect a USB hub.
  - Do not insert any metal or other foreign object into the USB terminal.
  - Do not spill water or other liquid on the USB terminal.
- Be careful not to pull the connected cable. Doing so could break the USB terminal and the connected device.

– CONTINUED –

- **If a device is connected for a long time when the engine is not running, doing so may cause the risk of a discharged battery. Even when the engine is running, we recommend that you do not connect a device for an unnecessarily long time.**
- **Do not connect a malfunctioning device. Doing so may cause the risk of smoke and fire.**

NOTE

- **The rated voltage of each USB terminal is 5 V. For details about the maximum rated power, refer to "How to Use the USB Power Supply" ☞P288. Before connecting a device, be sure to read the instruction manual of the device and check whether or not this specification of the output is supported by the device. If a device that requires power exceeding the maximum rating is connected, power supply or charging may not be possible. Even if charging could be completed, the time required for charging may be longer than when the genuine charger for that device is used.**
- **Depending on the device, charging may be possible only when a special cable is used. In this case, be sure to connect the device using the special cable.**
- **When a device that communicates with a PC is connected, power supply or charging may not be possible.**
- **When connect a device for charging, disconnect the device promptly after charging is completed.**

■ How to Use the USB Power Supply

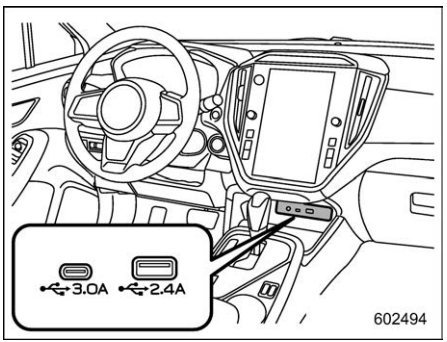

Type-A and Type-C

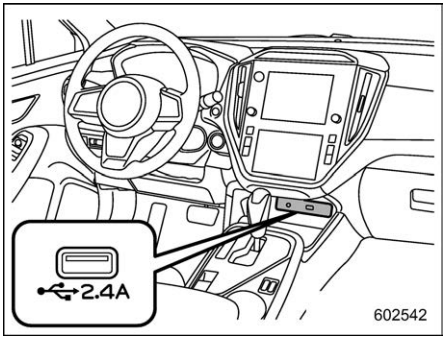

Type-A
Front seat USB power supply (an audio device can be connected and used)

– USB Type-A: DC 5 V/2.4 A*
– USB Type-C: DC 5 V/3.0 A*

*: The available electrical power of the two USB terminals is a maximum of 5.4 A.

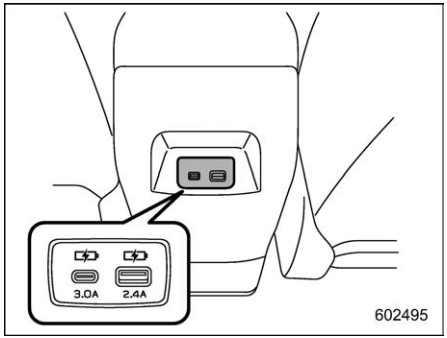

Console USB power supply (charge only) (if equipped)

– USB Type-A: DC 5 V/2.4 A*
– USB Type-C: DC 5 V/3.0 A*

*: The available electrical power of the two USB terminals is a maximum of 5.4 A.

Use the USB terminal to use or charge an electronic device.

When the ignition switch is in the “ACC” or “ON” position, the power can be supplied to the electronic device.

6-8. Wireless Charger (If Equipped)

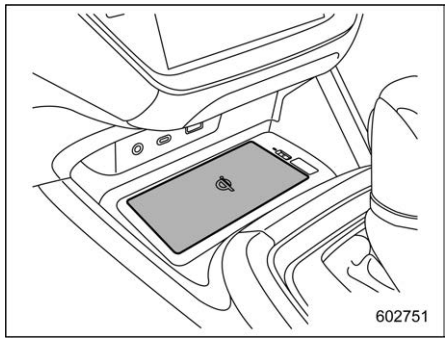

Wireless charger

To charge a cell phone, smartphone or a similar mobile device compatible with the Qi wireless charging standard, place the device in the charging area located below the center information display.

The “Qi” logo is a trademark of the Wireless Power Consortium.

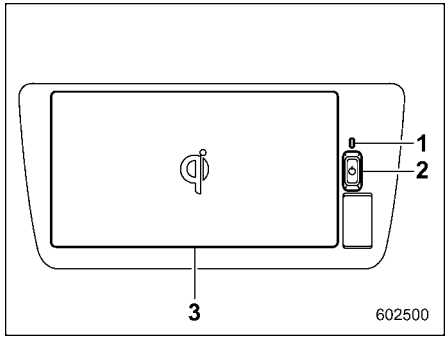

1 Indicator light
2 Power switch
3 Charging area

NOTE

Mobile devices and wireless chargers contain coils for charging. These coils allow the wireless charging system to charge a mobile device with a high level of charging efficiency. When your device is in the charging area, the wireless charger detects it and aligns an integrated moving coil with the coil in your device for charging. If vehicle vibration causes the two coils to become misaligned while the vehicle is in motion, the moving coil of the wireless charger automatically repositions itself and resumes charging.

– CONTINUED –

However, if the mobile device moves out of the charging area, charging will automatically stop.

■ How to Use the Wireless Charger

1. The wireless charger operate when the ignition switch is in the “ON” or “ACC” position.

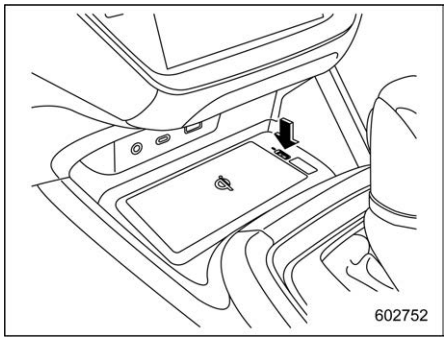

2. Press the power switch once to turn on the wireless charger. When the wireless charger is ON, the indicator light illuminates in green, and when the wireless charger is OFF, the indicator light turns off.

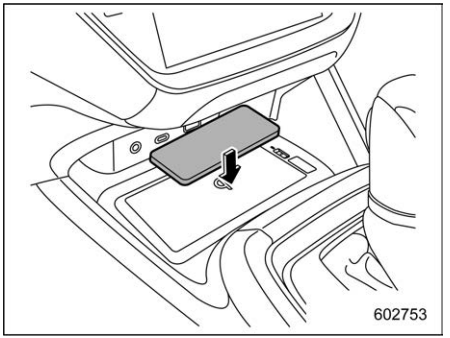

3. Place the mobile device so that the screen or keypad is facing up (the charging surface is facing downward). The center of the device must also be aligned with the center of the charging area. Depending on the mobile device, the charging coil may not be in the center of the device. In such cases, place the mobile device so that its charging coil is in the center of the charging area. The indicator light illuminates in orange during charging. If the indicator light does not illuminate in orange and device charging does not occur, move the device to the center of the charging area.
4. The indicator light illuminates in green when charging is complete.

NOTE

The power status of the wireless charger is stored even when the ignition switch is turned to the “OFF” position.

▼ How to use the quick charge

The following types of mobile devices support quick charging as opposed to normal charging (5 W).

- Mobile devices compliant with WPC* Ver. 1.2.4 and compatible with fast chargers can be charged up to 10 W.
- iPhone 8 (or later) with an iOS version compliant with WPC* Ver. 1.2.4 and compatible with 7.5 W charging.

* WPC: Wireless Power Consortium

1. Press the power switch three times to change to the quick-charging mode while your mobile device is charging in normal mode. The indicator light will change from orange to alternating green and orange when the wireless charger switches to the quick-charging mode.
2. When charging is complete, the quick-charging mode ends. To restart quick-charging, switch to the quick-charging mode again.

▼ Indicator light patterns

Indicator light	Interpretation
Off	The wireless charger is turned off
Green (illuminated)	Standby (ready for charging)*1
	Charging is complete*2
Orange (illuminated)	A mobile device is in the charging area (a mobile device is being detected)
	Charging
Green and orange illuminate alternately	Quick charging is in progress

*1: No power is output for charging when the wireless charger is in standby mode. Even if metal objects are placed on the charging tray in this state, they will not overheat.
*2: For some mobile devices, the indicator light remains orange even after charging is complete.

▼ List of warnings

Indicator light	Possible causes	Solution
Flashes orange once per second	A communication error occurred between the wireless charger and the access key fob.	If the engine is running, stop the engine and restart it. If the ignition switch is in “ACC”, start the engine once.
Repeatedly flashes orange three times	Metallic foreign object detected. A foreign object is detected between the mobile device and the charging area. The mobile device is out of alignment: The overheat prevention function of the charging coils was triggered because the mobile device’s charging coils were out of alignment with the charging area.	Remove any foreign objects between the mobile device and the charging area. Remove the mobile device from the charging area, check that the activation indicator light is illuminating in green again, and place the device in the center of the charging area. If there is a case or cover on your mobile device, be sure to remove it.
Repeatedly flashes orange four times	The temperature inside the wireless charger has increased.	Remove the mobile device from the charging area temporarily to stop charging. When the temperature of the heavy electrical equipment cools down, start charging the device again.

NOTE

If you hear noise on the AM radio while your device is charging, you may be able to reduce the noise by changing the charging frequency.

To change the charging frequency, press and hold the power switch to turn on the system.

After a certain amount of time, the indicator light will flash orange twice to indicate the frequency switch.

⚠ WARNING

- **For safety reasons, drivers must not operate a charging mobile device while driving.**

– CONTINUED –

- Do not charge small devices such as cordless headphones or lightweight cell phones while driving. Due to their light weight, these devices may be thrown from the charging tray resulting in an accident.
- The wireless power receiver can affect some implanted or other electrical medical devices. If you use a cardiac pacemaker, ventricular pacing pulse generator, cardioverter-defibrillator, or a similar device, consult with your physician before using the wireless charger.
- Before charging your device, make sure that there is no metal between the charging area and the mobile device. Metal objects may generate heat and cause burns when placed in the charging area.
- Do not apply strong force or impact to the charging area.
- Do not affix aluminum stickers to or place other metal objects in the charging area. Also, do not charge a mobile device that has aluminum stickers or other metal objects attached to it that may come in contact with the charging area. Metal objects may generate heat and cause burns when placed in the charging area.
- Do not disassemble, modify, or remove the wireless charger.
- Do not place magnetized objects in or near the charging area.
- During charging, do not cover your device with a cloth, etc.
- Do not charge your device in dusty conditions.
- Make sure that no foreign objects or liquids are placed or spilled in the wireless charger.

CAUTION

- Do not place the access key fob near the wireless charger.
- When your device is charging, keep any magnetic cards such as credit cards and precision devices such as watches away from the charging area. They may be damaged. To prevent discharging the vehicle battery, do not use the wireless charger for long periods of time when the engine is stopped.
- If the access key fob cannot be detected in the cabin, the battery cannot be charged. In addition, charging may be temporarily suspended when the remote keyless entry system is in operation, such as when opening and closing doors.
- Remove the device case to charge the mobile battery.
- Do not leave objects in the trays unattended for a long period of time. The paint on the trays may deteriorate depending on the type of device case or accessory.
- If your mobile device does not charge even after you place it in the charging area, remove the device case and any accessories.
- When the OS version of a mobile device is updated, the charging specifications may change significantly. Also, if the OS versions compatible with WPC change, the quick charging function may become unavailable. For details, check the website of your mobile device manufacturer.
- To prevent discharging the vehicle battery, do not use the wireless charger for long periods of

time when the engine is stopped.

NOTE

- This function is not available for devices larger than the charger tray.
- The wireless charger and mobile device will emit heat during charging, but this is not a malfunction.
- When your mobile device emits heat during charging, the mobile device's protective function may cancel charging.
- A beep will sound when the power switch of the wireless charger is pressed to turn the power ON or when a mobile device is being detected. This is not a malfunction.
- The fan may activate when the temperature rises, but this is not a malfunction.
- Qi standard wireless charger can be used on compatible devices. However, not all Qi standard devices and compatibility are guaranteed.

■ Certification for the Wireless Charger

- The U.S. and other FCC compliant countries

FCC ID: ACJ932AF2201

CAUTION

FCC CAUTION

Changes or modifications not expressly approved by the party responsible for compliance could void the user's authority to operate the equipment.

This equipment has been tested and found to comply with the limits for a wireless power charger, pursuant to part 18 of the FCC Rules.

This equipment generates, uses and can radiate radio frequency energy and, if not installed and used in accordance with the instructions, may cause harmful interference to radio communications.

However, there is no guarantee that interference will not occur in a particular installation.

If this equipment does cause harmful interference to radio communications, which can be determined by turning the equipment off and on, the user is encouraged to try to correct the interference by one or more of the following measures:

- **Reorient or relocate the receiving antenna.**
- **Increase the separation between the equipment and receiver.**
- **Connect the equipment into an outlet on a circuit different from that to which the receiver is connected.**

This equipment complies with FCC radiation exposure limits set forth for an uncontrolled environment and meets the FCC radio frequency (RF) Exposure Guidelines. This equipment should be installed and operated keeping the radiator at least 20 cm or more away from person's body.

NOTE

This device complies with part 15 and part 18 of the FCC Rules. Operation is subject to the following two conditions: (1) This device may not cause harmful interference, and (2) this device must accept any interference received, including interference that may cause

– CONTINUED –

undesired operation.

- Canada-spec. models

This device contains licence-exempt transmitter(s)/receiver(s) that comply with Innovation, Science and Economic Development Canada's licence-exempt RSS(s). Operation is subject to the following two conditions:

(1) This device may not cause interference.

(2) This device must accept any interference, including interference that may cause undesired operation of the device.

L'émetteur/récepteur exempt de licence contenu dans le présent appareil est conforme aux CNR d'Innovation, Sciences et Développement économique Canada applicables aux appareils radio exempts de licence. L'exploitation est autorisée aux deux conditions suivantes :

1) L'appareil ne doit pas produire de brouillage;

2) L'appareil doit accepter tout brouillage radioélectrique subi, même si le brouillage est susceptible d'en compromettre le fonctionnement.

CAUTION

This equipment complies with ISED radiation exposure limits set forth for an uncontrolled environment and meets RSS-102 of the ISED radio frequency (RF) Exposure rules. This equipment should be installed and operated keeping the radiator at least 20 cm or more away from person's body.

Cet équipement est conforme aux limites d'exposition aux rayonnements énoncées pour un environnement non contrôlé et respecte les règles d'exposition aux fréquences radioélectriques (RF) CNR-102 de l'ISDE. Cet équipement doit être installé et utilisé en gardant une distance de 20 cm ou plus entre le radiateur et le corps humain.

6-9. Ashtray (Dealer Option)

CAUTION

- **Do not use ashtrays as waste receptacles or leave a lighted cigarette in an ashtray. This could cause a fire.**
- **Always extinguish matches and cigarettes before putting them into the ashtray, and then close the ashtray securely. If you keep the ashtray open, the fire of the cigarette may spread to another cigarette butt and start a fire.**
- **Do not put flammable material in the ashtray.**
- **Do not leave a lot of cigarette butts in the ashtray.**

NOTE

Particles of ash and tobacco will accumulate around the hinges of the ashtray's inner lid. Clean them off using a toothbrush or a similar narrow-ended implement.

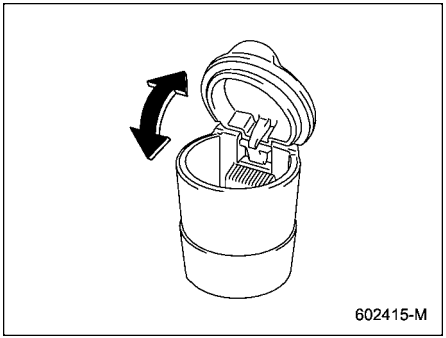

The portable ashtray can be installed in each cup holder or bottle holder. For the locations of the cup holders, refer to “Cup Holder” ☞P285. For the locations of the bottle holders, refer to “Bottle Holders” ☞P286.

When using the ashtray, open the lid of the ashtray. Fully close the lid after using the ashtray to help reduce residual smoke.

6-10. Assist Grip

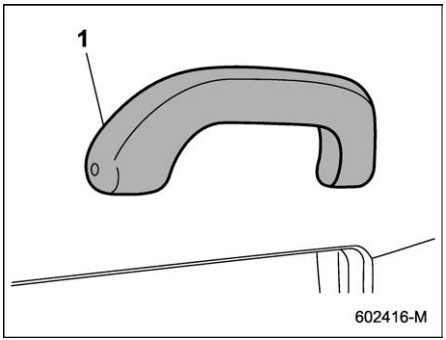

1 Assist grip

The assist grip is to be held to support the body of the passengers when they are in the seat and the vehicle is moving.

WARNING

Do not hold the assist grip when getting up from the seat. Holding and pulling the assist grip in the wrong way could break the grip and possibly cause injury.

CAUTION

Do not attach heavy objects to the assist grip. Doing so could break it and damage the object.

6-11. Coat Hook

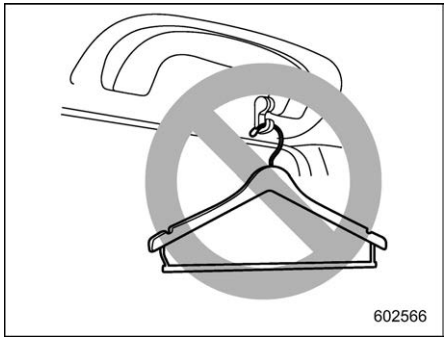

WARNING

Obey the following instructions.

- **Do not hang coat hangers or other hard or pointed objects on the coat hooks. Hang clothing directly on the coat hooks without using hangers.**
- **Before hanging clothing on the coat hooks, make sure there are no pointed objects in the pockets.**

If these instructions are ignored, the following may occur in sudden stops or in a collision.

- **Serious injuries by the items thrown through the cabin.**
- **Incorrect SRS curtain airbag deployment.**

CAUTION

Never hang anything on the coat hook that might obstruct the driver's view or that could cause injury in sudden stops or in a collision. And do not hang items on the coat hook that weigh 11 lbs (5 kg) or more.

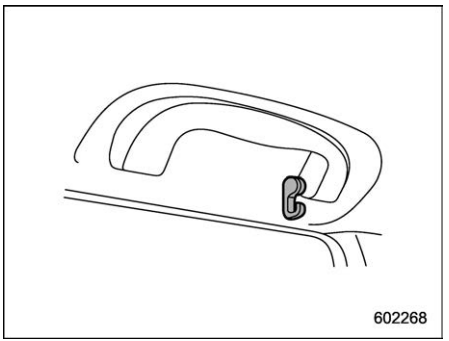

The coat hook is attached to each rear passenger's assist grip.

6-12. Floor Mat

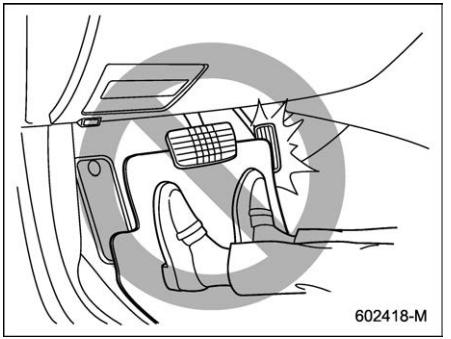

CAUTION

If the floor mat slips forward and interferes with the movement of the pedals during driving, it could cause an accident. Observe the following precautions to prevent the floor mat from slipping forward.

- **Be sure to use a genuine SUBARU floor mat designed with grommets in the correct locations.**
- **Make sure that the driver's floor mat is placed back in its proper location and is correctly secured on its retaining pins.**

- **Do not use more than one floor mat.**

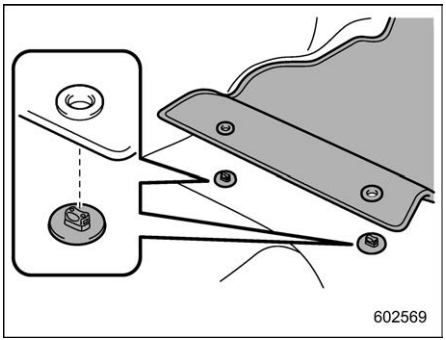

1. Insert the retaining hooks (clips) into the floor mat eyelets.

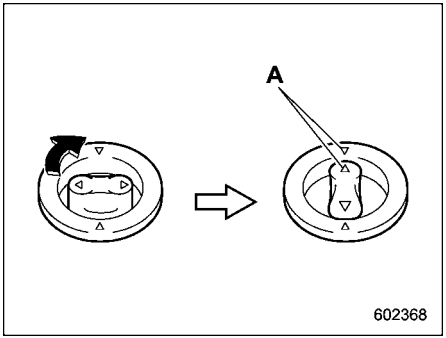

A: Align the triangle marks (△) when installing the floor mats.

2. Turn the upper knob of each retaining hook (clip) to secure the floor mats in place.

6-13. Shopping Bag Hook

CAUTION

Do not hang items on the shopping bag hook that weigh 6 lbs (3 kg) or more.

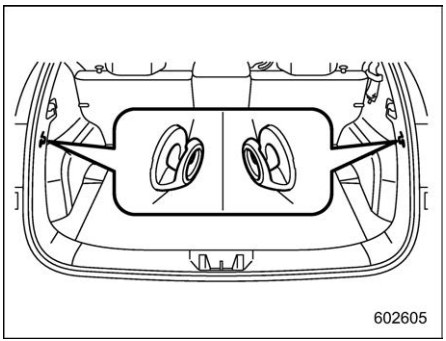

A shopping bag hook is attached to each side of the cargo area.

6-14. Cargo Area Cover (If Equipped)

The cargo area cover is provided for covering the cargo area and to protect its contents from direct sunlight. This cover is detachable to make room for additional cargo.

■ Using the Cover

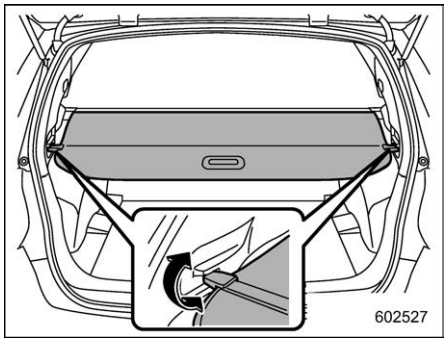

To extend the cover, pull the cargo area cover using the center hole, then insert its hooks into the catches as shown. To rewind it, unhook it from the catches and it will rewind automatically. You should hold on to the cover and guide it back into the cover housing while it is rewinding.

WARNING

Do not place anything on the extended cover. Putting excessive weight on the extended cover can break it and an object on the cover could tumble forward in the event of a sudden stop or collision. This could cause serious injury.

CAUTION

Be careful not to scratch the rear gate stays while extending and rewinding the cover.

Scratches on the stays could cause leakage of gas from the stays, which may result in their inability to hold the rear gate open.

■ To Remove the Cover Housing

1. Rewind the cover.

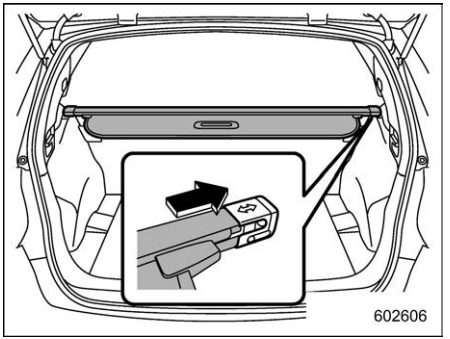

2. Push the cover housing to the right side and shorten it.
3. Take it off the retainer.

■ Stowage of the Cargo Area Cover

The cargo area cover can be stowed under the cargo floor as follows.

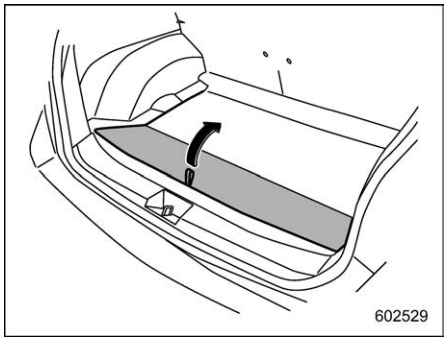

1. Raise and fold the rear end of the cargo floor board.

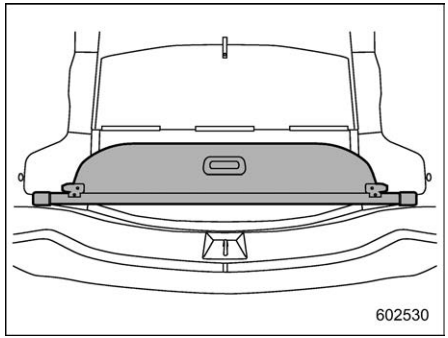

2. Stow the cover housing in the cargo area end.

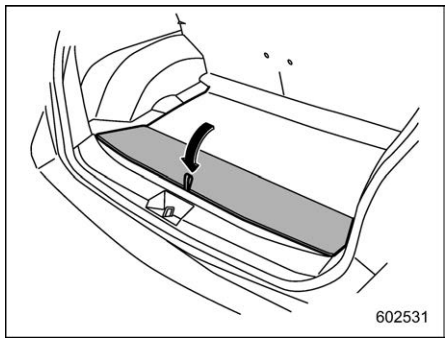

3. Put the cargo floor board back.

■ To Install the Cover Housing

The right end of the cargo area cover is a sliding structure.

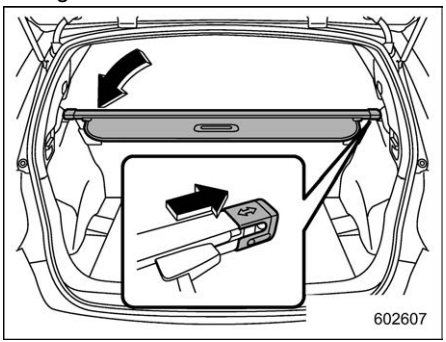

1. Insert the right end of the cover into the recessed portion with the arrow mark facing upward.
2. Hold the cover housing securely and insert the left end of the cover into the recessed portion.

6-15. Cargo Tie-Down Hooks

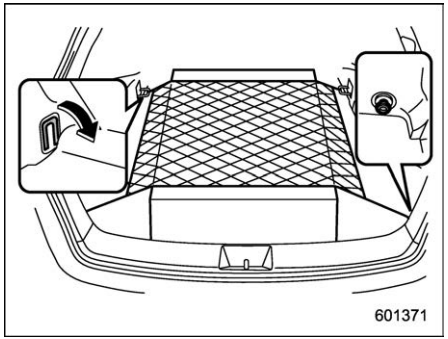

The cargo area is equipped with four tie-down hooks so that cargo can be secured with a cargo net or ropes.

When using the front tie-down hooks, turn them down out of the storing recesses.

CAUTION

The cargo tie-down hooks are designed only for securing light cargo. Never try to secure cargo that exceeds the capacity of the hooks. The maximum load capacity is 22 lbs (10 kg) per hook.

6-16. Under-Floor Storage Compartment

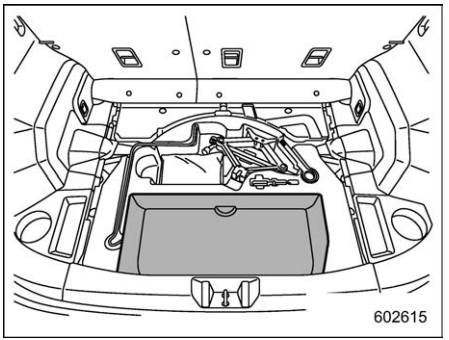

The subfloor storage compartment is located under the floor of the cargo area and can be used to store small items. To open the lid, pull the strap up.

CAUTION

- **Always keep the lid of the subfloor storage compartment closed while driving to reduce the risk of injury in the event of sudden stop or an accident.**
- **Do not store spray cans, containers with flammable or corrosive liquids or any other dangerous items in the subfloor storage compartment.**

7-1. Fuel 305
Fuel Requirements 305
Fuel Filler Lid and Cap 306
7-2. State Emission Testing (U.S. Only) 309
7-3. Preparing to Drive 311
7-4. Starting and Stopping the Engine (Models without Push-Button Ignition Switch) 311
General Precautions When Starting/Stopping Engine 311
Starting Engine 312
Stopping the Engine 313
Steering Lock 313
7-5. Starting and Stopping Engine (Models with Push-Button Start System) 314
Safety Precautions 314
Operating Range for Push-Button Start System 314
Starting Engine 314
Stopping Engine 315
When Access Key Fob Does Not Operate Properly 316
Steering Lock 316
7-6. Remote Engine Start System (Dealer Option) 317
Remote Engine Starter Transceiver (Fob) 317
Alternate Operation Method for Models with “Keyless Access with Push-Button Start System” 320
Entering the Vehicle While It Is Running via Remote Start (Models without “Keyless Access with Push-Button Start System”) 320
Entering the Vehicle While It Is Running via Remote Start (Models with “Keyless Access with Push-Button Start System”) 321
Entering the Vehicle Following Remote Engine Start Shutdown 321
Heating or Cooling the Interior of the Vehicle 321
Remote Transmitter Program (Remote Engine Starter Transceiver) 321
System Maintenance 322
Certification for Remote Engine Starter 323
7-7. Continuously Variable Transmission 324
Continuously Variable Transmission Features 324
Select Lever 325
Shift Lock Function 326
Selection of Manual Mode (If Equipped) 328
Selection of “L” (If Equipped) 329
Driving Tips 329
7-8. SI-DRIVE (If Equipped) 330
Intelligent (I) Mode 330
Sport (S) Mode 330
SI-DRIVE Switch 330
7-9. Power Steering 331
7-10. Braking 332
Braking Tips 332
Brake System 332
Disc Brake Pad Wear Warning Indicators 333
7-11. ABS (Anti-Lock Brake System) 334
ABS Self-Check 334
ABS Warning Light 334

7-12. Electronic Brake Force Distribution (EBD) System 335
EBD System Malfunctions 335
7-13. Vehicle Dynamics Control System 336
Vehicle Dynamics Control System Monitor 337
To Turn On/Off the Vehicle Dynamics Control System 337
7-14. Tire Pressure Monitoring System (TPMS) (U.S.-Spec. Models) 338
Certification for Tire Pressure Monitoring System 339
TPMS Screen 340
7-15. Parking Your Vehicle 340
Electronic Parking Brake 340
Parking Tips 346
7-16. Hill Start Assist System 347
7-17. Auto Start Stop System 348
System Operation 348
Displaying the Auto Start Stop System Status 352
System Warning 352
7-18. Rear View Camera 353
How to Use the Rear View Camera 354
Viewing Range on the Screen 354
Help Lines 355
7-19. BSD/RCTA (If Equipped) 357
System Features 358
System Operation 360
BSD/RCTA Approach Indicator Light/Warning Buzzer 361
BSD/RCTA OFF Indicator 363
BSD/RCTA Warning Indicator 364
To Turn On/Off the BSD/RCTA 364
Certification for the BSD/RCTA 365
Handling of Radar Sensors 366
7-20. Reverse Automatic Braking (RAB) System (If Equipped) 367
Reverse Automatic Braking (RAB) System Overview 368
Operating Conditions 369
Sonar Audible Alarm Function 372
Automatic Braking Function Operation 374
Canceling the Reverse Automatic Braking (RAB) System Operation 376
Reverse Automatic Braking (RAB) System ON/OFF Setting 376
RAB Warning Indicator 377
Handling of the Sonar Sensors 377
7-21. Driver Monitoring System (If Equipped) 378
User Recognition Function 382
Inattentive/Drowsy Driving Warning 384
Driver Monitoring System Indicator/Warning 385
Using the Driver Monitoring System 386
Registering and Deleting a User 387
Driver Monitoring System ON/OFF Settings 388
How to Get the Source Code That Uses Open Source Software 388

7-1. Fuel

CAUTION

- **Use of a fuel which is low in quality or use of an inappropriate fuel additive may cause damage to the engine and/or fuel system.**
- **Some gas stations, particularly those in high altitude areas, offer fuels posted as regular octane gasoline with an octane rating below 87 AKI (90 RON). Use of those fuels are not recommended.**

■ Fuel Requirements

The engine is designed to operate using **unleaded gasoline** with an octane rating of **87 AKI (90 RON) or higher**.

▼ Fuel octane rating

Using a gasoline with a lower octane rating can cause persistent and heavy knocking, which can damage the engine. Do not be concerned if your vehicle sometimes knocks lightly when you drive up a hill or when you accelerate. Contact your SUBARU dealer if you use a fuel with the specified octane rating and your vehicle knocks heavily or persistently.

▽ RON

This octane rating is the Research Octane Number.

▽ AKI

This octane rating is the average of the Research Octane and Motor Octane numbers and is commonly referred to as the Anti Knock Index (AKI).

▼ Unleaded gasoline

The neck of the fuel filler pipe is designed to accept only an unleaded gasoline filler nozzle. Under no circumstances should leaded gasoline be used because it will damage the emission control system and may impair driveability and fuel economy.

▼ Reformulated gasoline

SUBARU supports the use of reformulated gasoline when available. Reformulated gasoline has been blended to burn more cleanly and reduce vehicle emissions.

▼ MMT

Some gasoline contains an octane-enhancing additive called MMT (Methylcyclopentadienyl Manganese Tricarbonyl). If you use such fuels, your emission control system performance may deteriorate and the CHECK ENGINE warning light/malfunction indicator light may turn on. If this happens, return to your authorized SUBARU Dealer for service. If it is determined that the condition is caused by the type of fuel used, repairs may not be covered by your warranty.

▼ Gasoline for cleaner air

Your use of gasoline with detergent additives will help prevent deposits from forming in your engine and fuel system. This helps keep your engine in tune and your emission control system working properly, and is a way of doing your part for cleaner air. If you continuously use a high quality fuel with the proper detergent and other additives, you should never need to add any fuel system cleaning agents to your fuel tank.

Many gasolines are now blended with materials called oxygenates. Use of these fuels can also help keep the air cleaner. Oxygenated blend fuels, such as ethanol (ethyl or grain alcohol) may be used in your vehicle, but should contain no more than 15% ethanol for the proper operation of your SUBARU.

Do not use any gasoline that contains more than 15% ethanol, including from any pump labeled E30, E50 or E85 (which are only some examples of fuel containing more than 15% ethanol).

– CONTINUED –

In addition, some gasoline suppliers are now producing reformulated gasolines, which are designed to reduce vehicle emissions. SUBARU approves the use of reformulated gasoline.

If you are not sure what the fuel contains, you should ask your service station operators if their gasolines contain detergents and oxygenates and if they have been reformulated to reduce vehicle emissions.

As additional guidance, only use fuels suited for your vehicle as explained in the following.

- Fuel should be unleaded and have an octane rating no lower than that specified in this manual.
- Methanol (methyl or wood alcohol) is sometimes mixed with unleaded gasoline. Methanol can be used in your vehicle **ONLY** if it does not exceed 5% of the fuel mixture **AND** if it is accompanied by sufficient quantities of the proper cosolvents and corrosion inhibitors required to prevent damage to the fuel system. Do not use fuel containing methanol **EXCEPT** under these conditions.
- If undesirable driveability problems are experienced and you suspect they may be fuel related, try a different brand of gasoline before seeking service at your SUBARU dealer.
- Fuel system damage or driveability problems which result from the use of improper fuel are not covered under the SUBARU Limited Warranty.

■ Fuel Filler Lid and Cap

▼ Locations of the fuel filler lid

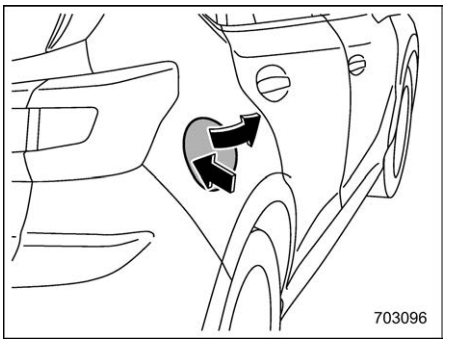

▼ Refueling

Only one person should be involved in refueling. Do not allow others to approach the area of the vehicle near the fuel filler pipe while refueling is in progress.

Be sure to observe any other precautions that are posted at the service station.

1. Before refueling, stop the vehicle, then turn off the ignition switch to turn off all the electrical components. At this time, the fuel filler lid also unlocks.

NOTE

When you lock the door, the fuel filler lid also locks. To unlock the fuel filler lid, perform one of the operations below.

- **Press the unlock button on the key fob.**
- **Press the unlock side of the power door locking switch.**

2. Push the rear side of the fuel filler lid.
3. The fuel filler lid opens automatically. Open it further by hand.

⚠ WARNING

Before opening the fuel filler cap, first touch the vehicle body or a metal portion of the fuel pump or similar object to discharge any static electricity that may be present on your body. If your body is carrying an electrostatic charge, there is a possibility that an electric spark could ignite the fuel, which could burn you. To avoid acquiring a new static electric charge, do not get back into the vehicle while refueling

is in progress.

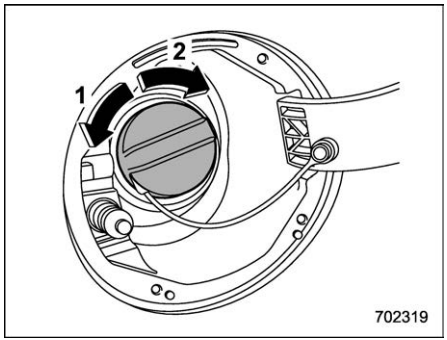

1 Open
2 Close

4. Remove the fuel filler cap by turning it slowly counterclockwise.

WARNING

- **Gasoline vapor is highly flammable. Before refueling, always turn the ignition switch to the "LOCK"/"OFF" position first and then close all vehicle doors and windows. Make sure that there are no lighted cigarettes, open flames or electrical sparks in the adjacent area. Only handle fuel outdoors. Quickly wipe up any spilled fuel.**
- **When opening the cap, grasp it firmly and turn it slowly to the left. Do not remove the cap quickly. Fuel may be under pressure and spray out of the fuel filler neck, especially in hot weather. If you hear a hissing sound while you are removing the cap, wait for the sound to stop and then slowly open the cap to prevent fuel from spraying out and creating a fire hazard.**

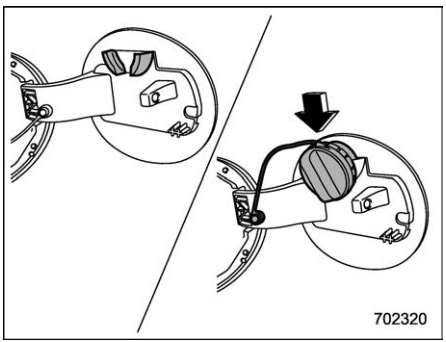

5. Set the fuel filler cap on the cap holder inside the fuel filler lid.

WARNING

- **When refueling, insert the fuel nozzle securely into the fuel filler pipe. If the nozzle is lifted or not fully inserted, its automatic stopping mechanism may not function, causing fuel to overflow the tank and creating a fire hazard.**
- **Stop refueling when the automatic stop mechanism on the fuel nozzle activates. If you continue to add fuel, temperature changes or other conditions may cause fuel to overflow from the tank and create a fire hazard.**

6. Stop filling the tank after the fuel filler pump automatically stops. Do not add any more fuel.
7. Put the cap back on and turn it clockwise until you hear a clicking noise. Be certain not to catch the tether under the cap while tightening.

CAUTION

Make sure that the cap is tightened until it clicks to prevent fuel spillage in the event of an accident.

– CONTINUED –

8. Close the fuel filler lid completely.

CAUTION

Do not let fuel spill on the exterior surfaces of the vehicle. Because fuel may damage the paint, be sure to wipe off any spilled fuel quickly. Paint damage caused by spilled fuel is not covered under the SUBARU Limited Warranty.

NOTE

- **You will see the "⛽▶" sign in the fuel gauge. This indicates that the fuel filler lid is located on the right side of the vehicle.**
- **If the fuel filler cap is not tightened until it clicks or if the tether is caught under the cap, the CHECK ENGINE warning light/malfunction indicator light may illuminate. Refer to "CHECK ENGINE Warning Light/ Malfunction Indicator Light" ☞P159.**
- **To lock the fuel filler lid, perform one of the operations below. However if these operations are performed when the fuel filler lid is open, the fuel filler lid will not lock when it is subsequently closed.**
  - **Press the "🔒" button on the key fob.**
  - **Press the lock side of the power door locking switch.**
- **When the doors are locked or unlocked using the automatic door lock system, the fuel filler lid will be locked or unlocked at the same time.**

CAUTION

- **Never add any cleaning agents to the fuel tank. The addition of a cleaning agent may cause damage to the fuel system.**
- **After refueling, turn the cap to the right until it clicks to ensure that it is fully tightened. If the cap is not securely tightened, fuel may leak out while the vehicle is being driven or fuel spillage could occur in the event of an accident, creating a fire hazard.**
- **Do not let fuel spill on the exterior surfaces of the vehicle. Because fuel may damage the paint, be sure to wipe off any spilled fuel quickly. Paint damage caused by spilled fuel is not covered under the SUBARU Limited Warranty.**
- **Always use a genuine SUBARU fuel filler cap. If you use the wrong cap, it may not fit or have proper venting and your fuel tank and emission control system may be damaged. It could also lead to fuel spillage and a fire.**
- **Immediately put fuel in the tank whenever the low fuel warning light illuminates. Engine misfires as a result of an empty tank could cause damage to the engine. Continuing to operate your vehicle at an extremely low fuel level may result in a reduction of engine performance.**

▼ If the fuel filler lid cannot be opened

If the fuel filler lid cannot be opened due to a malfunction or a dead battery, it can be opened from the cargo area.

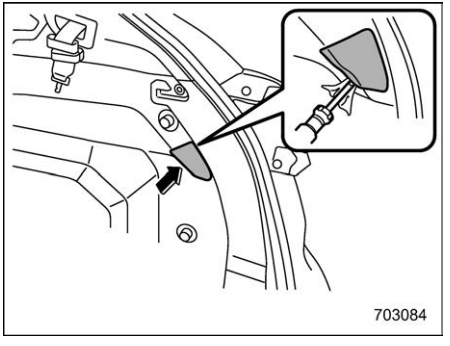

1. Cover the tip of a flat-head screwdriver with vinyl tape or cloth so that it will not scratch. Remove the access cover at the right-side of the cargo area trim using a flat-head screwdriver.

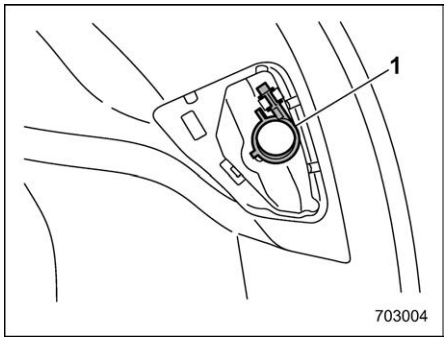

1 Clip

2. Remove the clip from the trim.

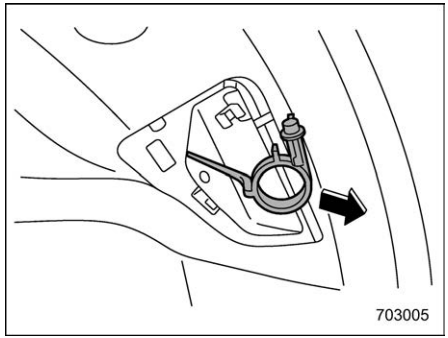

3. Pull the clip to unlock the fuel filler lid.

7-2. State Emission Testing (U.S. Only)

WARNING

Only use a four-wheel dynamometer when testing an All-Wheel Drive (AWD) model.

Testing of an AWD model must NEVER be performed on a single two-wheel dynamometer. Attempting to do so will result in uncontrolled vehicle movement and may cause an accident or injuries to persons nearby.

CAUTION

- **At state inspection time, remember to tell your inspection or service station in advance not to place your SUBARU AWD vehicle on a two-wheel dynamometer. Otherwise, serious transmission damage will result.**
- **Resultant vehicle damage due to improper testing is not covered under the SUBARU Limited Warranty and is the responsibility of the state inspection program or**

– CONTINUED –

its contractors or licensees.

California and a number of federal states have Inspection/Maintenance programs to inspect your vehicle's emission control system. If your vehicle does not pass this test, some states may deny renewal of your vehicle's registration.

Your vehicle is equipped with a computer that monitors the performance of the engine's emission control system. Certified emission inspectors will inspect the On-Board Diagnostic (OBDII) system as part of the state emission inspection process. The OBDII system is designed to detect engine and transmission problems that might cause the vehicle emissions to exceed allowable limits. OBDII inspections apply to all 1996 model year and newer passenger cars and trucks. Over 30 states plus the District of Columbia have implemented emission inspection of the OBDII system.

- The inspection of the OBDII system consists of a visual operational check of the "**CHECK ENGINE**" warning light/malfunction indicator light (MIL) and an examination of the OBDII system with an electronic scan tool.
- A vehicle passes the OBDII system inspection if proper operation of the "**CHECK ENGINE**" warning light/malfunction indicator light is observed, there are no stored diagnostic trouble codes, and the OBDII readiness monitors are all complete.
- A vehicle fails the OBDII inspection if the "**CHECK ENGINE**" warning light/malfunction indicator light is not properly operating (light is illuminated or is not working due to faulty LED (Light Emitting Diode)) or there is one or more diagnostic trouble codes stored in the vehicle's computer.
- A state emission inspection may reject (not pass or fail) a vehicle if the number of OBDII system readiness monitors "**NOT READY**" is greater than one. If the vehicle's battery has been recently replaced or disconnected, the OBDII system inspection may indicate that the vehicle is not ready for the emission test. Under this condition, the vehicle driver should be instructed to drive his/her vehicle for a few days to reset the readiness monitors and return for an emission re-inspection.
- Owners of rejected or failing vehicles should contact their SUBARU Dealer for service.

Some states still use dynamometers in their emission inspection program. A dynamometer is a treadmill or roller-like testing device that allows your vehicle's wheels to turn while the vehicle remains in one place. Prior to your vehicle being put on a dynamometer, tell your emission inspector not to place your SUBARU AWD vehicle on a two-wheel dynamometer. **Otherwise, serious transmission damage will result.**

The U.S. Environmental Protection Agency (EPA) and states using two-wheel dynamometers in their emission testing program have EXEMPTED SUBARU AWD vehicles from the portion of the testing program that involves a two-wheel dynamometer. There are some states that use four-wheel dynamometers in their testing program. When properly used, this equipment should not damage a SUBARU AWD vehicle.

Under no circumstances should the rear wheels be jacked off the ground, nor should the driveshaft be disconnected in an attempt to bypass AWD for state emission testing. An AWD vehicle must be tested using an AWD dynamometer with all 4 wheels driven and loaded.

7-3. Preparing to Drive

You should perform the following checks and adjustments every day before you start driving.

1. Check that all windows, mirrors, and lights are clean and unobstructed.
2. Check the appearance and condition of the tires. Also check tires for proper inflation.
3. Look under the vehicle for any sign of leaks.
4. Check that no small animals enter the engine compartment.
5. Check that the hood and rear gate are fully closed.
6. Check the adjustment of the seat.
7. Check the adjustment of the inside and outside mirrors.
8. Fasten your seatbelt. Check that your passengers have fastened their seatbelts.
9. Check the operation of the warning and indicator lights when the ignition switch is turned to the “ON” position.
10. Check the gauges, indicator and warning lights after starting the engine.

CAUTION

Trapping small animals in the cooling fan and drive belt may result in a malfunction. Check that no small animal enters the engine compartment and under the vehicle before starting the engine.

NOTE

Engine oil, engine coolant, brake fluid, washer fluid and other fluid levels should be checked daily, weekly or at fuel stops.

7-4. Starting and Stopping the Engine (Models without Push-Button Ignition Switch)

■ General Precautions When Starting/Stopping Engine

WARNING

- **Never start the engine from outside the vehicle (except when using the remote engine start system). It may result in an accident.**
- **Do not leave the engine running in locations with poor ventilation, such as a garage and indoors. The exhaust gas may enter the vehicle or indoors, and it may result in carbon monoxide poisoning.**
- **Do not start the engine near dry foliage, paper, or other flammable substances. The exhaust pipe and exhaust emissions can create a fire hazard at high temperatures.**

– CONTINUED –

CAUTION

- **If the engine is stopped during driving, the catalyst may overheat and burn.**
- **When starting the engine, be sure to sit in the driver's seat (except when using the remote engine start system).**

NOTE

- **Avoid racing and rapid acceleration immediately after the engine has started.**
- **After the engine starts, the engine speed will be kept high.**
- **On rare occasions, it may be difficult to start the engine depending on the fuel used and the driving condition (repeated short trips when the engine is not warmed up sufficiently). In such a case, it is recommended to switch to a different brand of fuel.**
- **On rare occasions, transient knocking may be heard from the engine when the accelerator is operated rapidly such as a rapid start-up and a rapid acceleration. This is not a malfunction.**
- **The engine starts more easily when the headlights, air conditioner and rear window defogger are turned off.**

■ Starting Engine

CAUTION

Do not operate the engine starter continuously for more than 10 seconds. If the engine fails to start after operating the engine starter for 5 to 10 seconds, wait for 10 seconds or more before trying again.

NOTE

- **It may be difficult to start the engine when the battery has been disconnected and reconnected (for maintenance or other purposes). This difficulty is caused by the electronically controlled throttle's self-diagnosis function. To overcome it, keep the ignition switch in the "ON" position for approximately 10 seconds before starting the engine.**
- **Do not shift the select lever while the engine starter is cranking.**

CAUTION

If you restart the engine while the vehicle is moving, shift the select lever into the "N" position. Do not attempt to place the select lever of a moving vehicle into the "P" position.

1. Apply the parking brake.
2. Turn off unnecessary lights and accessories.
3. Shift the select lever to the "P" or "N" position (preferably "P" position). The engine starter will only operate when the select lever is at the "P" or "N" position.
4. Turn the ignition switch to the "ON" position and check the operation of the warning and indicator lights. Refer to "Warning and Indicator Lights" ☞P154.
5. Turn the ignition switch to the "START" position **without** depressing the accelerator pedal. Release the key immediately after the engine has started.
   If the engine does not start, perform the following procedure.
   (1) Turn the ignition switch to the "LOCK" position and wait for at least 10 seconds. After checking that the parking brake is applied, turn the ignition switch to the "START" position while depressing

the accelerator pedal slightly (approximately a quarter of the full stroke). Release the accelerator pedal as soon as the engine starts.

(2) If this fails to start the engine, turn the ignition switch back to the "LOCK" position and wait for at least 10 seconds. Then fully depress the accelerator pedal and turn the ignition switch to the "START" position. If the engine starts, quickly release the accelerator pedal.

(3) If this fails to start the engine, turn the ignition switch again to the "LOCK" position. After waiting for 10 seconds or longer, turn the ignition switch to the "START" position without depressing the accelerator pedal.

(4) If the engine still does not start, contact your nearest SUBARU dealer for assistance.

6. Confirm that all warning and indicator lights have turned off after the engine has started. The fuel injection system automatically lowers the idle speed as the engine warms up.

While the engine is warming up, make sure that the select lever is at the "P" or "N" position and that the parking brake is applied.

■ Stopping the Engine

The ignition switch should be turned off only when the vehicle is stopped and the engine is idling.

⚠ WARNING

Do not stop the engine when the vehicle is moving. This will cause loss of power to the power steering and the brake booster, making steering and braking more difficult. It could also result in accidental activation of the "LOCK" position on the ignition switch, causing the steering wheel to lock.

1. Stop the vehicle completely.
2. Move the select lever to the "P" position.
3. Turn the ignition switch to the "LOCK/OFF" position.

The engine will stop, and the power will be switched off.

■ Steering Lock

After stopping the engine and the key is removed from ignition switch, the steering wheel will be locked due to the steering lock function.

When the engine is restarted, the steering lock will be automatically released.

▼ When the steering lock cannot be released

When you cannot unlock the steering wheel, perform the following steps.

1. Check that the parking brake is applied.
2. Turn off unnecessary lights and accessories.
3. Check that the select lever is set in the "P" position.
4. Depress the brake pedal and keep it depressed.
5. Turn the ignition switch to the "ON" position while turning the steering wheel left and right.

If you cannot unlock the steering wheel by doing the steps, contact your nearest SUBARU dealer.

7-5. Starting and Stopping Engine (Models with Push-Button Start System)

■ Safety Precautions

Refer to “Safety Precautions” ☞P107.

■ Operating Range for Push-Button Start System

Refer to “Operating Range for Push-Button Start System” ☞P148.

■ Starting Engine

WARNING

- **There are some general precautions when starting the engine. Carefully read the precautions described in “General Precautions When Starting/Stopping Engine” ☞P311.**
- **If the indicator on the push-button ignition switch flashes in green after the engine has started, never drive the vehicle. The steering is still locked, and it may result in an accident.**

CAUTION

- **When the operation indicator on the push-button ignition switch is flashing in orange, there may be a malfunction with the vehicle. Contact a SUBARU dealer immediately.**
- **If the indicator on the push-button ignition switch is flashing in green after the engine has started, it means that the steering is still locked. While moving the steering wheel right and left, depress the brake pedal, and press the push-button ignition switch.**
- **Do not continue pressing the push-button ignition switch for more than 10 seconds. Doing so could cause a malfunction. If the engine does not start, stop pressing the push-button ignition switch. Instead, press the push-button ignition switch without depressing the brake pedal to switch the power status to “OFF”. Wait 10 seconds, and then press the push-button ignition switch to start the engine.**

NOTE

- **When pressing the push-button ignition switch while depressing the brake pedal:**
  - **The engine starter operates for a maximum of 10 seconds and after starting the engine, the engine starter stops automatically.**
  - **The engine can be started regardless of the power status.**
- **If the engine does not start, check the security indicator light. Then press the push-button ignition switch without depressing the brake pedal to switch the power to “OFF”.**
  - **If the light had illuminated, try to start the engine again.**
  - **If the light had been off, press the push-button ignition switch while depressing the brake pedal more forcefully.**
- **The engine start procedures may not function depending on the radio wave conditions around the vehicle. In such a case, refer to “Starting Engine” ☞P427.**
- **If the vehicle battery is discharged, the steering cannot be unlocked. Charge the battery.**
- **It may be difficult to start the engine when the battery has been disconnected and reconnected (for main-**

tenance or other purposes). This difficulty is caused by the electronically controlled throttle's self-diagnosis function. To overcome it, keep the ignition switch in the "ON" position for approximately 10 seconds before starting the engine.

- **After the engine starts, the engine speed will be kept high.**
- **Do not shift the select lever while the engine starter is cranking.**

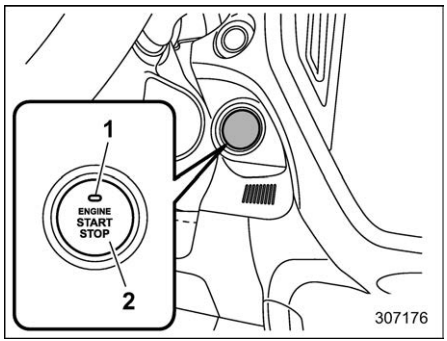

1 Operation indicator
2 Push-button ignition switch

When the push-button ignition switch is pressed while depressing the brake pedal, the engine will start. The starting procedure for the engine is as follows.

1. Carry the access key fob, and sit in the driver's seat.
2. Make sure the parking brake is applied.
3. Make sure the select lever is in the "P" position. The engine can also start when the select lever is in the "N" position, however, for safety reasons, start in the "P" position.
4. Depress the brake pedal until the operation indicator on the push-button ignition switch turns green. When starting with the select lever in the "N" position, the indicator does not turn green.
5. While depressing the brake pedal, press the push-button ignition switch.

NOTE

While pressing the select lever button in, the indicator on the push-button ignition switch will not turn green even when the select lever is in the "P" position.

■ Stopping Engine

1. Stop the vehicle completely.
2. Move the select lever to the "P" position.
3. Press the push-button ignition switch. The engine will stop, and the power will be switched off.

⚠ WARNING

- **Do not touch the push-button ignition switch during driving.**

  When the push-button ignition switch is operated as follows, the engine will stop.

  – The switch is pressed and held for 3 seconds or longer.

  – The switch is pressed briefly 3 times or more in succession.

  The power steering system will not operate either. A greater force will be required to steer, and it may result in an accident.
- **If the engine stops during driving, do not operate the push-button ignition switch or open any of the doors until the vehicle is stopped in a safe location. It is dangerous because the steering lock may be activated. Stop the vehicle in a safe place, and contact a SUBARU dealer immediately.**

⚠ CAUTION

- **Do not stop the engine while the select lever is in a position other than the "P" position.**

– CONTINUED –

- **If the engine is stopped while the select lever is in a position other than the "P" position, the power will be in "ACC". If the vehicle is left in this condition, the battery may be discharged.**

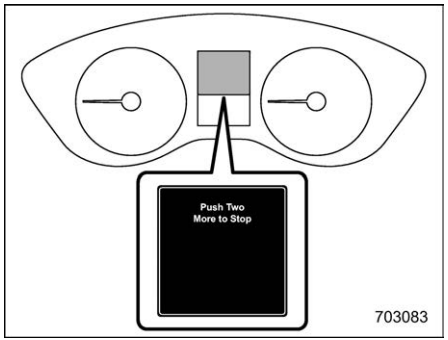

NOTE

- **If you press the push-button ignition switch while driving, the emergency engine stop interrupt screen alerts the driver by messages on the combination meter display (color LCD) and beeps.**
- **Although you can stop the engine by operating the push-button ignition switch, do not stop the engine during driving except in an emergency.**

■ When Access Key Fob Does Not Operate Properly

Refer to "Access Key Fob – If Access Key Fob Does Not Operate Properly" ☞P426.

■ Steering Lock

After stopping the engine and any door is opened, the steering wheel will be locked due to the steering lock function.

When the engine is restarted, the steering lock will be automatically released.

▼ When the steering lock cannot be released

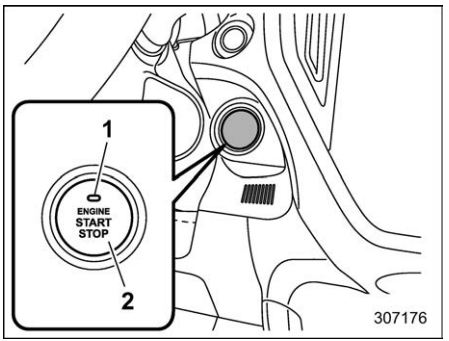

1 Operation indicator
2 Push-button ignition switch

When you cannot restart the engine due to the steering lock, check the status of operation indicator and perform the following steps.

▽ Operation indicator flashing in green

1. Check that the select lever is set in the "P" position.
2. Depress the brake pedal and keep it.
3. Press the push-button ignition switch while turning the steering wheel left and right.

▽ Operation indicator flashing in orange

There may be a malfunction in the steering lock function. Immediately contact your nearest SUBARU dealer.

7-6. Remote Engine Start System (Dealer Option)

WARNING

- **There are some general precautions when starting the engine. Carefully read the precautions described in "General Precautions When Starting/Stopping Engine" ☞P311.**
- **Do not remote start a vehicle in an enclosed environment (e.g. closed garage). Prolonged operation of a motor vehicle in an enclosed environment can cause a harmful build-up of carbon monoxide. Carbon monoxide is harmful to your health. Exposure to high levels of carbon monoxide can cause headaches, dizziness or in extreme cases unconsciousness and/or death.**

The remote engine start system allows you to start the engine from outside the vehicle. In addition, the remote engine start system can activate the heater or air conditioner, providing you with a comfortable cabin upon entry. For more details, refer to the Owner's Manual supplement for the remote engine start system.

NOTE

- **The length of time for which it is acceptable to allow the engine to remain idling may be bound by local laws and regulations. Check the local rules when using the remote engine start system.**
- **When taking your vehicle in for service, it is recommended that you inform the service personnel that your vehicle is equipped with a remote engine start system.**

■ Remote Engine Starter Transceiver (Fob)

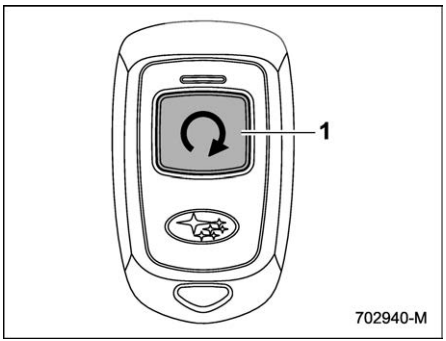

1 Fob button

▼ **Starting the engine**

NOTE

All vehicle doors and the engine hood must be closed prior to activating the remote engine start system. Any open entry point will prevent starting or cause the engine to stop.

The remote engine start system is activated by pressing the fob button on your remote engine starter transceiver (fob) twice within 3 seconds. If the fob is within operating range of the system and the start request is received, the following will occur.

- The fob flashes and beeps once.
- The horn sounds once.
- The side marker lights, tail lights, and parking lights flash once.

The system will check certain safety preconditions before starting, and if all conditions are met, the engine will start within 5 seconds. After the engine starts, the following will occur.

- The fob flashes and beeps twice.
- The horn sounds once.
- The side marker lights, tail lights, and parking lights flash once.

While the engine is idling via the remote engine start system, the following will

– CONTINUED –

occur.

- The side marker lights, tail lights, and parking lights remain illuminated.
- The fob button flashes once every 3 seconds.
- The power windows are disabled.

If the engine turns over but does not start (or starts and stalls) the remote engine start system will power off and then attempt to start the engine 3 additional times. The system will not attempt to restart the engine if it determines a vehicle malfunction is preventing starting. If the engine does not start after 3 additional attempts, the remote engine start request will be aborted.

▼ Stopping the engine

Press and hold the fob button for at least 2 seconds to stop the engine. The fob will flash and beep three times, indicating the engine has stopped. If the stop request is not received (for example, if the user is too far away from the vehicle), the fob will continue to flash once every 3 seconds. The system will automatically stop the engine after 15 minutes.

▼ Remote start safety features

For safety and security reasons, the remote engine start system will prevent starting (or stop the engine if running) and sound the horn twice if any of the following conditions is detected. In addition, the fob will flash and beep 3 times.

- The total run-time has exceeded 20 minutes.
- The brake pedal is depressed.
- A key is in the ignition switch (models without “keyless access with push-button start system”).
- The push-button ignition switch is in a position other than “OFF” (models with “keyless access with push-button start system”).
- The engine hood is open.
- The engine idle speed exceeds 3,500 rpm.
- The security alarm is triggered.
- The select lever is not in the “P” position.

If the system detects any door open during operation, it will prevent starting or stop the engine, and sound the horn and flash side marker lights, tail lights, and parking lights 6 times.

In addition to the items above, if the vehicle’s engine management system determines there is a safety risk due to a vehicle-related problem, the vehicle will power down and the horn will sound 3 times.

NOTE

- **If the alarm system is armed at the time of remote engine starter activation (the security indicator light on the combination meter is flashing), the alarm system will remain armed throughout the remote start run cycle.**
- **If the alarm system is disarmed at the time of remote engine starter activation (the security indicator light on the combination meter is not flashing), the alarm system will remain disarmed throughout the remote start run cycle.**

▼ Remote start operation - fob confirmation

Your remote engine starter fob is a bidirectional transceiver that can confirm system operation with several different visual and audible indications. The fob’s LED-backlit button and internal piezo buzzer will indicate the status of the system using the following the flash and beep sequences, provided the fob is within operational range of the system.

Precondition	Fob Indication		Meaning
	Flash	Beep	
Fob start button is being pressed	Continuous while button is held down	—	The fob is transmitting an RF signal
User attempts to start engine by pressing fob button twice within 3 sec	1 flash	1 beep	Engine start request received
	2 flashes	2 beeps	Engine started successfully
	1 flash every 3 sec	—	Engine idling
	3 flashes	3 beeps	Vehicle is in range but engine not started
Engine idling by remote engine start operation	1 flash every 3 sec	—	Engine idling
	3 flashes	3 beeps	Engine stopped by system time-out or for safety reasons (see sections above)
User attempts to stop engine by pressing and holding fob button for at least 2 sec	3 flashes	3 beeps	Engine stopped by user request
	1 flash every 3 sec	—	Stop request not received. Engine still idling.

– CONTINUED –

■ Alternate Operation Method for Models with “Keyless Access with Push-Button Start System”

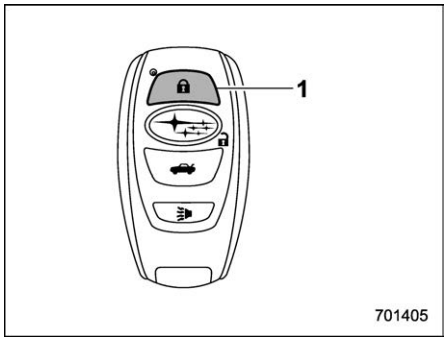

Access key fob
1 Lock button

An access key fob can be used as the remote engine start transmitter. Operate the lock button to start or stop the engine as follows.

▼ Before starting the engine

Before using the remote engine start system to start the engine, confirm the following conditions.

- The select lever is in the “P” position.
- All doors are closed.
- The engine hood is closed.
- The push-button ignition switch is in the “OFF” position.

▼ Starting the engine

To start the engine with remote engine start system, briefly press the lock button twice within 2 seconds, then press and hold the lock button for 3 seconds.

1. Press the lock button briefly. The hazard warning flashers then flash once and the buzzer chirps once.
2. Within 2 seconds, press the lock button briefly again. The hazard warning flashers then flash once again, and the buzzer chirps once again.
3. After step 2, immediately press and hold the lock button. The hazard warning flashers then flash three times, and the horn will honk once.
4. Approximately 3 seconds after step 3, release the lock button. The engine will then start successfully.

▼ Stopping the engine

Press and hold the lock button to stop the engine with remote engine start system.

▼ Remote start safety features

For detailed information, refer to “Remote start safety features” ☞P318.

■ Entering the Vehicle While It Is Running via Remote Start (Models without “Keyless Access with Push-Button Start System”)

1. Unlock the vehicle doors using the remote keyless entry system.

NOTE

If the vehicle’s doors are unlocked manually using the key, the vehicle’s alarm system will trigger (if the alarm system is armed prior to activating the remote engine start system) and the engine will turn off. Perform either of the following procedures to disarm the alarm system. Refer to “Alarm System” ☞P131.

- **Insert the key into the ignition switch and turn it to the “ON” position.**
- **Press any button on the remote keyless entry transmitter.**

2. Enter the vehicle. The engine will shut down when any door is opened.
3. Insert the key into the ignition switch and turn it to the “START” position to restart the engine.

■ Entering the Vehicle While It Is Running via Remote Start (Models with “Keyless Access with Push-Button Start System”)

1. Unlock the vehicle doors using the keyless access function and remote keyless entry system.

NOTE

If the vehicle’s doors are unlocked manually using the key, the vehicle’s alarm system will trigger (if the alarm system is armed prior to activating the remote engine start system) and the engine will turn off. Perform either of the following procedures to disarm the alarm system. Refer to “Alarm System” ☞P131.

- **Turn the push-button ignition switch to the “ACC” or “ON” position.**
- **Press any button on the access key fob.**

2. Enter the vehicle. The engine will remain running provided the access key fob is present and detected by the vehicle.
3. Press the push-button ignition switch once while depressing the brake pedal before driving your vehicle. The remote engine starter transceiver (fob) will flash and beep 3 times to indicate that the remote start system has been shut down.

■ Entering the Vehicle Following Remote Engine Start Shutdown

An alarm trigger may occur if the vehicle is opened by the remote keyless entry transmitter within a few seconds immediately following remote engine start shutdown.

■ Heating or Cooling the Interior of the Vehicle

After the system starts the engine, the heater or air conditioning will activate and heat or cool the interior to a factory default temperature setting, with automatic selected for all other settings.

■ Remote Transmitter Program (Remote Engine Starter Transceiver)

New transmitters can be programmed to the remote engine start system in the event that a transmitter is lost, stolen, damaged or additional transmitters are desired (the system will accept up to eight transmitters). New remote engine start transmitters can be programmed according to the following procedure.

1. Open the driver’s door (the driver’s door must remain open throughout the entire process).
2. Depress and hold the brake pedal.
3. Turn the ignition switch to “ON” then “LOCK”/“OFF”, back to “ON” then “LOCK”/“OFF”, back to “ON” then “LOCK”/“OFF”, then back to “ON” again and leave the ignition “ON” throughout the programming process.
4. The system will flash the side marker lights, tail lights and parking lights and honk the horn three times, indicating that the system has entered the transmitter learn mode.
5. Press and release the “ ” button on the transmitter that you want to program.
6. The system will flash the side marker lights, tail lights and parking lights and honk the horn one time, indicating that the system has learned the transmitter. Upon successful programming, the remote start confirmation transmitter button will flash one time.
7. Repeat step 5 for any additional transmitters (the system will accept up to eight transmitters).

– CONTINUED –

8. The system will exit the transmitter learn mode if the key is turned to the "LOCK"/"OFF" position, the door is closed or after 2 minutes.

■ System Maintenance

NOTE

For remote engine starter transceiver:

In the event that the vehicle's battery is replaced, discharged or disconnected, it will be necessary to start the vehicle a minimum of one time using the key prior to activating the remote engine start system. This is required to allow the vehicle electronic systems to re-synchronize.

▼ Changing the battery

⚠ CAUTION

- **Do not let dust, oil or water get on or in the remote engine start transmitter when replacing the battery.**
- **Be careful not to damage the printed circuit board in the remote engine start transmitter when replacing the battery.**
- **Be careful not to allow children to touch the battery and any removed parts; children could swallow them.**
- **There is a danger of explosion if an incorrect replacement battery is used. Replace only with the same or equivalent type of battery.**
- **Battery should not be exposed to excessive heat such as sunshine, fire or the like.**

For models with "keyless access with push-button start system":

Perform the procedure described in "Replacing Battery of Access Key Fob" ☞P486.

For remote engine starter transceiver:

The 3-volt lithium battery (model CR-2450) supplied in your remote engine start transmitter should last approximately one year, depending on usage. When the battery begins to weaken, you will notice a decrease in range (distance from the vehicle that your remote control operates). Follow the instructions below to change the remote engine start transmitter battery.

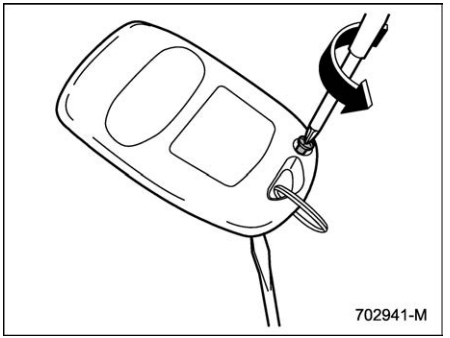

1. Remove the small phillips screw located on the back side lower left corner of the transmitter.
2. Carefully pry the remote engine start transmitter halves apart using a small flat-head screwdriver.

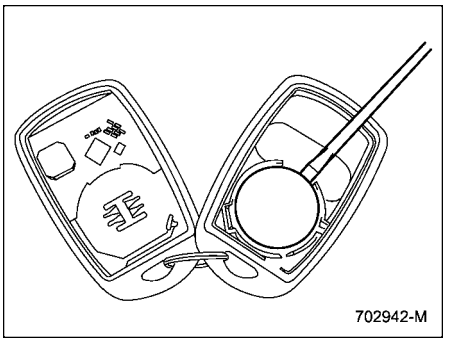

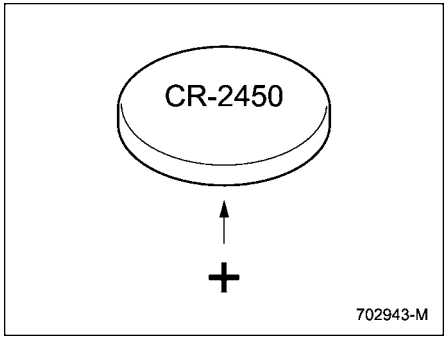

3. Remove the circuit board from the bottom half of the case and remove the battery and replace with new one. Be sure to observe the (+) sign on the old battery before removing it to ensure that the new battery is inserted properly (battery "+" should be pointed away from the transmitter circuit board on battery).
4. Carefully snap the case halves back together, reinstall the phillips screw and test the remote engine start system.

■ Certification for Remote Engine Starter

▼ U.S.-spec. models

⚠ CAUTION

FCC WARNING

Changes or modifications not expressly approved by the party responsible for compliance could void the user's authority to operate the equipment.

NOTE

This device complies with part 15 of the FCC Rules. Operation is subject to the following two conditions: (1) This device may not cause harmful interference, and (2) this device must accept any interference received, including interference that may cause undesired operation.

▼ Canada-spec. models

NOTE

This device complies with Industry Canada's licence-exempt RSSs. Operation is subject to the following two conditions: (1) This device may not cause interference; and (2) This device must accept any interference, including interference that may cause undesired operation of the device.

REMARQUE

Le présent appareil est conforme aux CNR d'Industrie Canada applicables aux appareils radio exempts de licence. L'exploitation est autorisée aux deux conditions suivantes: (1) l'appareil ne doit pas produire de brouillage; (2) l'utilisateur de l'appareil doit accepter tout brouillage radioélectrique subi, même si le brouillage est susceptible d'en compromettre le fonctionnement.

203226

7-7. Continuously Variable Transmission

WARNING

Do not shift from the "P" or "N" position into the "D" or "R" position while depressing the accelerator pedal. This may cause the vehicle to lurch forward or backward.

CAUTION

- **Observe the following precautions. Failure to observe these precautions could cause damage to the transmission.**
  - **Shift into the "P" or "R" position only after the vehicle has completely stopped.**
  - **Do not shift from the "D" position into the "R" position or vice versa until the vehicle has completely stopped.**
- **Do not race the engine for more than 5 seconds in any position except the "N" or "P" position when the brake is applied or when chocks are used in the wheels. This may cause the transmission fluid to overheat.**
- **Never move the vehicle rearward by inertia with the select lever set in a forward driving position or move the vehicle forward by inertia with the select lever set in the "R" position. Doing so may result in an unexpected accident or malfunction.**
- **When parking the vehicle, first securely apply the parking brake and then place the select lever in the "P" position. Do not park for a long time with the select lever in any other position as doing so could result in a dead battery.**

■ Continuously Variable Transmission Features

The continuously variable transmission is electronically controlled and provides an infinite number of forward speeds and 1 reverse speed. For some models, it also has a manual mode or an "L" position.

NOTE

- **When the engine coolant temperature is still low, the transmission will shift at higher engine speeds than when the coolant temperature is sufficiently high in order to shorten the warm-up time and improve driveability. The gearshift timing will automatically shift to the normal timing after the engine has warmed up.**
- **Immediately after transmission fluid is replaced, you may feel that the transmission operation is somewhat unusual. This results from invalidation of data which the on-board computer has collected and stored in memory to allow the transmission to shift at the most appropriate times for the current condition of your vehicle. Optimized shifting will be restored as the vehicle continues to be driven for a while.**
- **When driving under continuous heavy load conditions such as climbing a long, steep hill, the engine speed, vehicle speed and air conditioning system cooling performance may automatically be reduced. This is not a malfunction. This phenomenon results from the engine control function maintaining the cooling performance of the vehicle. The engine and vehicle speed will return to a normal speed when the engine is able to maintain the optimum cooling performance after the heavy load decreases. Driving under a heavy load must be performed with ex-**

treme care.

- **The continuously variable transmission is a chain type system that provides superior transmission efficiency for maximum fuel economy. At times, depending on varying driving conditions, a chain operating noise may be heard that is characteristic of this type of system.**
- **Place the shift boot to the original position after it is lifted. If the select lever is operated with the shift boot in the rolled up position, the shift boot may have tension and it may disturb the select lever operation.**

■ Select Lever

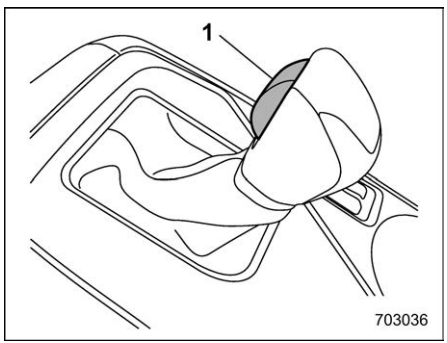

1 Select lever button

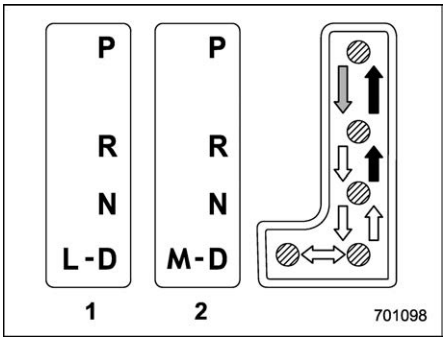

1 Models with “L” position
2 Models with manual mode

⇨ : With the brake pedal depressed, shift while pressing the select lever button in
➡ : Shift while pressing the select lever button in
⇨ : Shift without pressing the select lever button

The select lever has four positions, “P”, “R”, “N”, “D” and also has an “L” or “M” gate.

NOTE

- **For some models, to protect the engine while the select lever is in the “P” or “N” position, the engine is controlled so that the engine speed may not become too high even if the accelerator pedal is depressed hard.**
- **When you change the select lever position, make sure to move the select lever firmly to the selected position.**

▼ P (Park)

This position is for parking the vehicle and starting the engine. In this position, the transmission is mechanically locked to prevent the vehicle from rolling freely.

When you park the vehicle, first apply the parking brake, then shift into the “P” position. Do not hold the vehicle with only the mechanical friction of the transmission.

To shift the select lever from the “P” to any other position, you should depress the brake pedal fully then move the select lever. This prevents the vehicle from lurching when it is started.

▼ R (Reverse)

This position is for backing the vehicle. To shift from the “N” to “R” position, stop the vehicle completely then move the lever to the “R” position while pressing the select lever button in.

When the ignition switch has been turned to the “ACC” position, the movement of the select lever from the “N” to “R” position is only possible by depressing the brake pedal. For details, refer to “Shift Lock Function” ☞P326.

– CONTINUED –

▼ **N (Neutral)**

This position is for restarting a stalled engine. In this position, the transmission is neutral, meaning that the wheels and transmission are not locked. Therefore, the vehicle will roll freely, even on the slightest incline unless the parking brake or foot brake is applied.

Avoid coasting with the transmission in neutral. Engine braking has no effect in this condition.

WARNING

Do not drive the vehicle with the select lever in the "N" (neutral) position. Engine braking has no effect in this condition and the risk of an accident is consequently increased.

▼ **D (Drive)**

This position is for normal driving. The transmission shifts automatically and continuously into a suitable gear according to the vehicle speed and the acceleration you require. Also, while driving up and down a hill, the transmission assists and controls the driving performance and engine braking while corresponding to the road grade.

When more acceleration is required in "D" position, depress the accelerator pedal fully to the floor and hold that position. The transmission will automatically downshift. In this case, the transmission will operate like a conventional automatic transmission. When you release the pedal, the transmission will return to the original gear position.

If one of the shift paddles behind the steering wheel is operated while driving in the "D" position, the transmission will temporarily switch to the manual mode. In this mode, you can shift to any gear position using the shift paddles. For details about the manual mode, refer to "Selection of Manual Mode" ☞P328. Once the vehicle speed stabilizes, the transmission will switch from the manual mode back to the "D" position for normal driving.

▽ **While climbing a grade**

When driving up a hill, undesired upshift is prevented from taking place when the accelerator is released. This minimizes the chance of subsequent downshifting to a lower gear when accelerating again. This prevents repeated upshifting and downshifting resulting in a smoother operation of the vehicle.

NOTE

The transmission may downshift, depending on the way the accelerator pedal is depressed to accelerate the vehicle again.

■ Shift Lock Function

The shift lock function helps prevent the improper operation of the select lever.

- The select lever cannot be operated unless the ignition switch is turned to the "ON" position and the brake pedal is depressed.
- The select lever cannot be moved from the "P" position to any other position before the brake pedal is depressed. Depress the brake pedal first, and then operate the select lever.
- Only the "P" position allows you to turn the key from the "ACC" position to the "LOCK" position and remove the key from the ignition key cylinder (models without "keyless access with push-button start system").
- Only the "P" position allows you to turn the push-button ignition switch to the "OFF" position (models with "keyless access with push-button start system").
- If the ignition switch is turned to the "ACC" position while the select lever is in the "N" position, the select lever may not be moved to the "P" position without depressing the brake pedal and press-

ing the select lever button.

▼ Shift lock release

If the select lever cannot be operated, turn the ignition switch back to the “ON” position, then move the select lever to the “P” position with the select lever button pressed and the brake pedal depressed.

If the select lever does not move after performing the above procedure, check and confirm the following and release the shift lock accordingly.

- **When the select lever cannot be shifted from “P” to “N”:**

Refer to “Shift lock release using the shift lock release portion” ☞P327.

- **When the select lever cannot be shifted from “N” to “R” or “P”:**

Place the ignition switch in the “ACC” position, then move the select lever to the “P” position with the brake pedal depressed.

If the select lever still does not move, refer to “Shift lock release using the shift lock release portion” ☞P327.

If the shift lock cannot be released without using the shift lock release button in the above cases, there may be a malfunction in the shift lock system or the vehicle control system.

Contact a SUBARU dealer for an inspection as soon as possible.

▼ Shift lock release using the shift lock release portion

Perform the following procedure to release the shift lock.

1. Apply the parking brake and stop the engine.

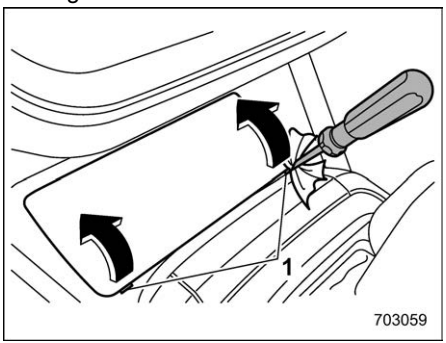

1 Slit

2. Cover the tip of a flat-head screwdriver with vinyl tape or cloth so that it will not scratch. Insert a flat-blade screwdriver into the two slits and then lift upward.

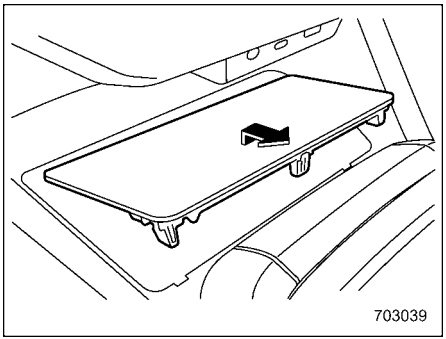

3. Remove the center tray or wireless charger (if equipped).

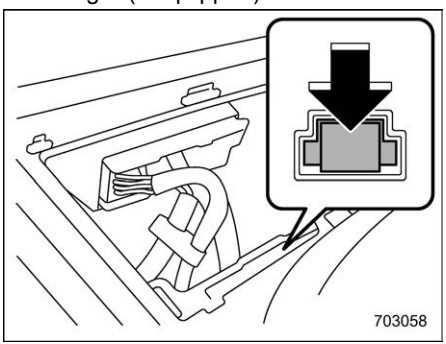

4. While depressing the brake pedal, press the shift lock release portion, and then move the select lever.

– CONTINUED –

If the select lever does not move after performing the above procedure, the shift lock system may be malfunctioning. Contact a SUBARU dealer for an inspection as soon as possible.

■ Selection of Manual Mode (If Equipped)

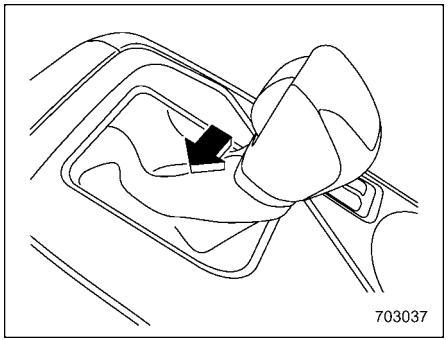

With the vehicle either moving or stationary, move the select lever from the “D” position to the “M” position to select the manual mode.

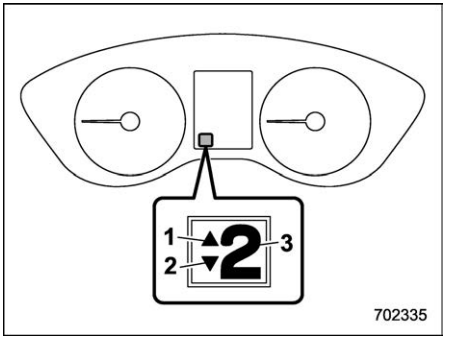

1 Upshift indicator
2 Downshift indicator
3 Gear position indicator

When the manual mode is selected, the gear position indicator and upshift indicator and/or downshift indicator on the combination meter illuminate. The gear position indicator shows the currently selected gear in the 1st-to-8th gear range. The upshift and downshift indicators show when a gearshift is possible. When the upshift indicator “▲” is on, upshifting is possible. When the downshift indicator “▼” is on, downshifting is possible. When both indicators are on, upshifting and downshifting are both possible. When the vehicle stops (for example, at traffic signals), the downshift indicator turns off.

Gearshifts can be performed using the shift paddle behind the steering wheel.

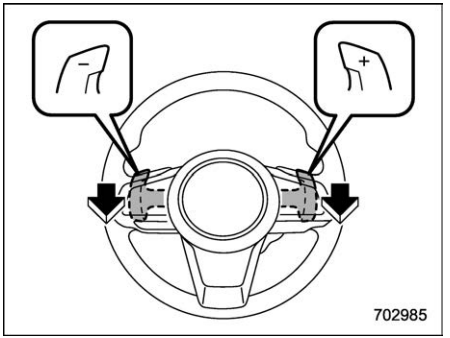

To upshift to the next higher gear position, pull the shift paddle that has “**+**” indicated on it. To downshift to the next lower gear position, pull the shift paddle that has “**–**” indicated on it.

To deselect the manual mode, return the select lever to the “D” position from the “M” position. While driving with the select lever in the “D” position, if you change gears by operating the shift paddle, the gear position indicator illuminates and shows the current gear condition.

⚠ CAUTION

Do not place or hang anything on the shift paddles. Doing so may result in

accidental gear shifting.

NOTE

Please read the following points carefully and bear them in mind when using the manual mode.

- **If you attempt to shift down when the engine speed is too high, i.e., when a downshift would push the tachometer needle beyond the red zone, beeps will be emitted to warn you that the downshift is not possible.**
- **If you attempt to shift up when the vehicle speed is too low, the transmission will not respond.**
- **You can perform a skip-shift (for example, from 4th to 2nd) by operating the shift paddle twice in rapid succession.**
- **The transmission automatically selects 1st gear when the vehicle stops moving.**
- **If the temperature of the transmission fluid becomes too high, the AT OIL TEMP warning light will illuminate. Immediately stop the vehicle in a safe place and let the engine idle until the warning light turns off.**

■ Selection of “L” (If Equipped)

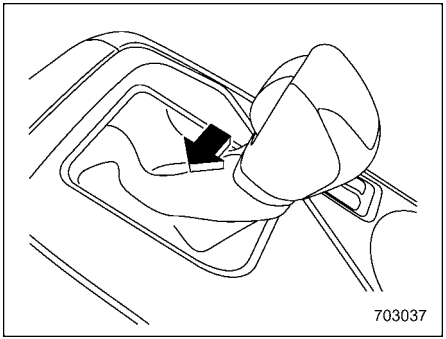

“L” is for using engine braking when going down a hill, etc. To select this mode, move the select lever from the “D” position to the “L” position.

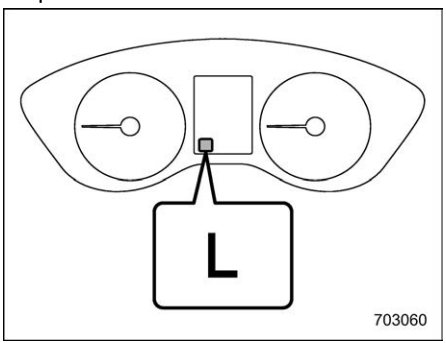

When selected, the indicator “L” will illuminate on the combination meter.

To deselect “L”, move the select lever to the “D” position.

■ Driving Tips

NOTE

If the accelerator and brake pedals are depressed at the same time, driving torque may be restrained. This is not a malfunction.

- On a road surface where there is a risk of wheelspin (for example, a snow- or gravel-covered road), you can pull away from a standstill safely and easily by first selecting the 2nd gear of the manual mode.
- Always apply the foot or parking brake when the vehicle is stopped in the “D” or “R” position.
- Make sure to apply the parking brake when parking your vehicle. Do not hold the vehicle with only the transmission.
- Do not keep the vehicle in a stationary position on an uphill grade by using the “D” position. Use the brake instead.
- The engine may, on rare occasions, knock when the vehicle rapidly accelerates or rapidly pulls away from a standstill. This phenomenon does not indicate a malfunction.

7-8. SI-DRIVE (If Equipped)

SI-DRIVE (SUBARU Intelligent Drive) works to maximize engine performance, control and efficiency.

This system consists of the following modes:

- Intelligent (I) mode
- Sport (S) mode

Intelligent (I) mode is selected when the push-button ignition switch is turned to the "ON" position. By adjusting the SI-DRIVE switch, the character of the power unit changes.

■ Intelligent (I) Mode

▼ **For smooth, efficient performance driving**

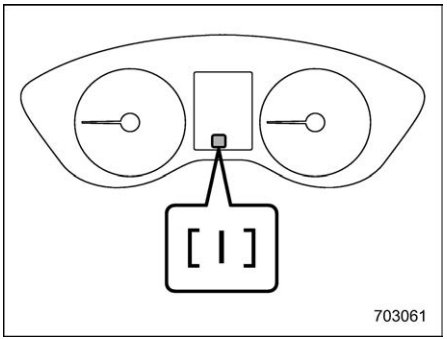

The linear acceleration characteristic of the Intelligent (I) mode is ideal for normal driving usage.

The Intelligent (I) mode provides well-balanced performance with greater fuel efficiency and smooth driveability without stress. Power delivery is moderate during acceleration for maximum fuel efficiency.

This is ideal for around-town driving and situations that do not require full power output. It provides better control in difficult driving conditions, such as slippery roads or loose surfaces, due to gentler throttle response.

■ Sport (S) Mode

▼ **For all-around performance driving**

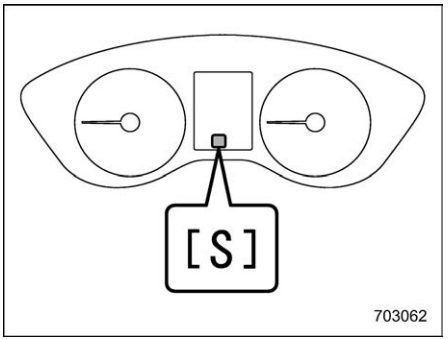

The Sport (S) mode provides the engine power desired by those who want to make the driving experience their own personal adventure.

■ SI-DRIVE Switch

NOTE

- **If any of the SI-DRIVE indicators blink, the SI-DRIVE system may be malfunctioning. Contact your SUBARU dealer.**
- **The default mode of the SI-DRIVE system is the Intelligent (I) mode. Once you turn off the engine, the previous setting mode is canceled and the SI-DRIVE system returns to**

the Intelligent (I) mode the next time you turn on the engine.

- **While the engine is running, if the CHECK ENGINE warning light/malfunction indicator light illuminates, the SI-DRIVE mode changes to the Intelligent (I) mode. In this case, it is not possible to change to another mode.**

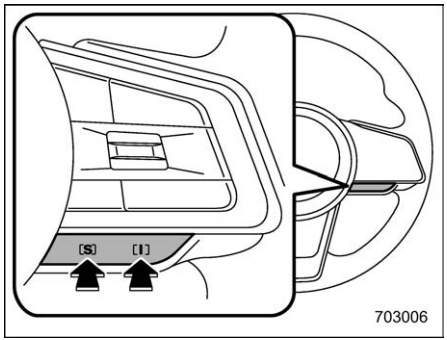

SI-DRIVE switch

To select the intelligent (I) mode, press the "I" side of the switch. To select the Sport (S) mode, press the "S" side of the switch.

7-9. Power Steering

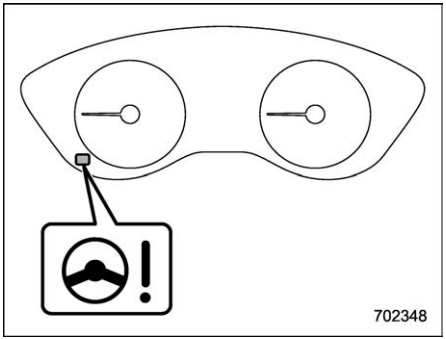

Power steering warning light

The vehicle is equipped with an electric power steering system. When the ignition switch is turned to the "ON" position, the power steering warning light on the combination meter illuminates to inform the driver that the warning system is functioning properly. Then, if the engine started, the warning light turns off to inform the driver that the steering power assist is operational.

CAUTION

When the power steering warning light is illuminated, there may be more resistance when the steering wheel is operated. Drive carefully to the nearest SUBARU dealer and have the vehicle inspected immediately.

NOTE

If the steering wheel is operated in the following ways, the power steering control system may temporarily limit the power assist in order to prevent the system components, such as the control computer and drive motor, from overheating.

- **The steering wheel is operated frequently and turned sharply while the vehicle is maneuvered at extremely low speeds, such as while frequently turning the steering wheel during parallel parking.**
- **The steering wheel remains in the fully turned position for a long period of time.**

At this time, there will be more resistance when steering. However, this is not a malfunction. Normal steering force will be restored after the steering wheel is not operated for a while and the power steering control system has an opportunity to cool down. However, if the power steering is operated in a non-standard way which causes power

– CONTINUED –

assist limitation to occur too frequently, this may result in a malfunction of the power steering control system.

7-10. Braking

■ Braking Tips

⚠ WARNING

Never rest your foot on the brake pedal while driving. This can cause dangerous overheating of the brakes and needless wear on the brake pads.

▼ When the brakes get wet

When driving in rain or after washing the vehicle, the brakes may get wet. As a result, brake stopping distance will be longer. To dry the brakes, drive the vehicle at a safe speed while lightly depressing the brake pedal to heat up the brakes.

▼ Use of engine braking

Remember to make use of engine braking in addition to foot braking. When descending a grade, if only the foot brake is used, the brakes may start working improperly because of brake fluid overheating, caused by overheated brake pads. To help prevent this, shift into a lower gear to get stronger engine braking.

▼ Braking when a tire is punctured

Do not depress the brake pedal suddenly when a tire is punctured. This could cause a loss of control of the vehicle. Keep driving straight ahead while gradually reducing speed. Then slowly pull off the road to a safe place.

■ Brake System

▼ Two separate circuits

Your vehicle has a dual circuit brake system. Each circuit works diagonally across the vehicle. If one circuit of the brake system should fail, the other half of the system still works. If one circuit fails, the brake pedal will go down much closer to the floor than usual and you will need to press it down much harder. And a much longer distance will be needed to stop the vehicle.

▼ Electronic brake booster

The vehicle is equipped with an electronic brake booster to provide additional braking force. Do not turn off the ignition switch while driving because that will turn off the brake booster, resulting in poor braking power.

The brakes will continue to work even when the brake booster completely stops functioning. If this happens, you will have to depress the pedal much harder than during normal braking, and the braking distance will increase.

NOTE

When the following operations are performed, an operating sound from the electronic brake boost control module may be heard. This is not a malfunction.

- **The brake pedal was operated.**
- **The driver's door was opened.**
- **The EyeSight function was activated.**
- **Several minutes have passed after the engine stopped.**

▽ **Supplemental booster function when pressure fails**

If there is a malfunction in the braking system, the power for the braking will be stored by controlling the hydraulic pressure of the VDC system.

When the brake pedal is depressed while the supplemental booster function is operating, an operation sound and brake pedal vibration may be generated.

▽ **Electronic brake booster warning**

The brake system warning light illuminates when the electronic brake booster is malfunctioning. In addition, the warning messages "Brake System" and "Check Owner's Manual" are displayed alternately on the combination meter display (color LCD). If the warning light illuminates, promptly park in a safe location as soon as possible and we recommend that you contact your SUBARU dealer. Refer to "Electronic brake booster warning" ☞P164.

▼ **Brake assist system**

WARNING

Do not be overconfident about the brake assist. It is not a system that brings more braking ability to the vehicle beyond its braking capability. Always use the utmost care when driving regarding vehicle speed and safe distance.

CAUTION

When you need to brake suddenly, continue depressing the brake pedal strongly to bring the effect of the brake assist.

Brake assist is a driver assistance system. It assists the brake power when the driver cannot depress the brake pedal strongly and the brake power is insufficient.

Brake assist generates the brake power according to the speed at which the driver depresses the brake pedal.

NOTE

When you depress the brake pedal strongly or suddenly, the following phenomena occur. However, even though these occur, they do not indicate any malfunctions, and the brake assist system is operating properly.

- **You might feel that the brake pedal is applied by lighter force and generates a greater braking force.**
- **You might hear the sound of ABS operating from the engine compartment.**

■ Disc Brake Pad Wear Warning Indicators

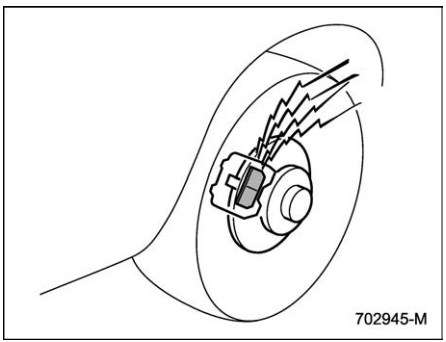

The disc brake pad wear warning indicators on the disc brakes give a warning

– CONTINUED –

noise when the brake pads are worn.

If a squeaking or scraping noise is heard from the disc brakes while braking, immediately have your vehicle inspected by the nearest SUBARU dealer.

7-11. ABS (Anti-Lock Brake System)

WARNING

Always use the utmost care in driving – overconfidence because you are driving with an ABS equipped vehicle could easily lead to a serious accident.

CAUTION

- **The ABS does not always decrease stopping distance. You should always maintain a safe following distance from other vehicles.**
- **When driving on badly surfaced roads, gravel roads, icy road, or over newly fallen snow, stopping distances may be longer for a vehicle with the ABS than one without. When driving under these conditions, therefore, reduce your speed and leave ample distance from other vehicles.**
- **When you feel the ABS operating, you should maintain constant brake pedal pressure. Do not pump the brake pedal since doing so may defeat the operation of the ABS.**

The ABS prevents the lock-up of wheels which may occur during sudden braking or braking on slippery road surfaces. This helps prevent the loss of steering control and directional stability caused by wheel lock-up.

When the ABS is operating, you may hear a chattering noise or feel a slight vibration in the brake pedal. This is normal when the ABS operates.

The ABS will not operate when the vehicle speed is below approximately 6 mph (10 km/h).

■ ABS Self-Check

You may feel a slight shock in the brake pedal and hear the operating noise of the ABS from the engine compartment just after the vehicle is started. This is caused by an automatic functional test of the ABS being carried out and does not indicate any abnormal condition.

■ ABS Warning Light

Refer to “ABS Warning Light” ☞P162.

7-12. Electronic Brake Force Distribution (EBD) System

The EBD system maximizes the effectiveness of the brakes by allowing the rear brakes to supply a greater proportion of the braking force. It functions by adjusting the distribution of braking force to the rear wheels in accordance with the vehicle's loading condition and speed.

The EBD system is an integral part of the ABS and uses some of the ABS components to perform its function of optimizing the distribution of braking force. If any of the ABS components used by the EBD function fails, the EBD system also stops working.

When the EBD system is operating, you may hear a chattering noise or feel a slight vibration in the brake pedal. This is normal and does not indicate a malfunction.

■ EBD System Malfunctions

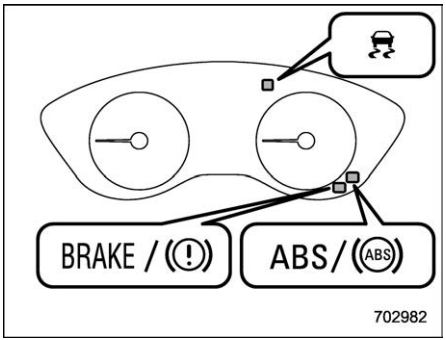

If a malfunction occurs in the EBD system, the system stops working and the following warning lights illuminate simultaneously.

- Brake system warning light
- ABS warning light
- Vehicle Dynamics Control warning light

If all of the warning lights remain on even though the parking brake is released, the brake fluid level may be low or there could be a problem with the EBD system. Park the vehicle in a safe place immediately and contact a SUBARU dealer.

⚠ WARNING

- **Driving with the brake system warning light on is dangerous. This indicates your brake system may not be working properly. If the light remains on, have the brakes inspected by a SUBARU dealer immediately.**
- **If at all in doubt about whether the brakes are operating properly, do not drive the vehicle. Have your vehicle towed to the nearest SUBARU dealer for repair.**

7-13. Vehicle Dynamics Control System

WARNING

Always use the utmost care in driving – overconfidence because you are driving with a Vehicle Dynamics Control system equipped vehicle could easily lead to a serious accident.

CAUTION

- **Even if your vehicle is equipped with Vehicle Dynamics Control system, winter tires should be used when driving on snow-covered or icy roads; in addition, vehicle speed should be reduced considerably. Simply having a Vehicle Dynamics Control system does not guarantee that the vehicle will be able to avoid accidents in any situation.**
- **Activation of the Vehicle Dynamics Control system is an indication that the road being traveled on has a slippery surface; since having Vehicle Dynamics Control is no guarantee that full vehicle control will be maintained at all times and under all conditions, its activation should be seen as a sign that the speed of the vehicle should be reduced considerably.**
- **Whenever suspension components, steering components, or an axle are removed from a vehicle equipped with the Vehicle Dynamics Control system, have an inspection of that system performed by an authorized SUBARU dealer.**
- **The following precautions should be observed in order to ensure that the Vehicle Dynamics Control system is operating properly.**
  - **All four wheels should be fitted with tires of the same size, type, and brand. Furthermore, the amount of wear should be the same for all four tires.**
  - **Keep the tire pressure at the proper level as shown on the tire inflation pressure label attached to the driver's side door pillar.**
- **If non-matching tires are used, the Vehicle Dynamics Control system may not operate correctly.**

In the event of wheelspin and/or skidding on a slippery road surface and/or during cornering and/or an evasive maneuver, the Vehicle Dynamics Control system adjusts the engine's output and the wheels' respective braking forces to help maintain traction and directional control.

- **Traction Control Function**

The traction control function is designed to prevent spinning of the driving wheels on slippery road surfaces, thereby helping to maintain traction and directional control. Activation of this function is indicated by flashing of the Vehicle Dynamics Control operation indicator light.

- **Skid Suppression Function**

The skid suppression function is designed to help maintain directional stability by suppressing the wheels' tendency to slide sideways during steering operations. Activation of this function is indicated by flashing of the Vehicle Dynamics Control operation indicator light.

NOTE

- **The Vehicle Dynamics Control system may be considered normal when the following conditions occur.**
  - **Slight twitching of the brake pedal is felt.**
  - **The vehicle or steering wheel shakes to a small degree.**
  - **An operating noise from the engine compartment is heard briefly when starting the engine and when driving off after starting the engine.**
  - **The brake pedal seems to jolt when driving off after starting the engine.**
- **In the following circumstances, the vehicle may be less stable than it feels to the driver. The Vehicle Dynamics Control System may therefore operate. Such operation does not indicate a system malfunction.**
  - **On gravel-covered or rutted roads**
  - **On unfinished roads**
  - **When the vehicle is fitted with snow tires or winter tires**
- **Activation of the Vehicle Dynamics Control system will cause operation of the steering wheel to feel slightly different compared to that for normal conditions.**
- **It is always important to reduce speed when approaching a corner, even if the vehicle is equipped with Vehicle Dynamics Control.**
- **Always turn off the engine before replacing a tire as failure to do so may render the Vehicle Dynamics Control system unable to operate correctly.**

■ Vehicle Dynamics Control System Monitor

Refer to “Vehicle Dynamics Control Warning Light/Vehicle Dynamics Control Operation Indicator Light” ☞P167 and “Vehicle Dynamics Control OFF Indicator Light” ☞P168.

■ To Turn On/Off the Vehicle Dynamics Control System

To turn the Vehicle Dynamics Control on and off, operate the center information display. Refer to “Car settings” ☞P201 (11.6-inch display models) or “Vehicle setting icons” ☞P219 (dual 7.0-inch display models).

Creating an adequate driving wheel slip by deactivating the Vehicle Dynamics Control system temporarily may help to escape from the following situations. Turn the Vehicle Dynamics Control system off when necessary.

- A standing start on a steeply sloping road with a snowy, gravel-covered, or otherwise slippery surface
- Extrication of the vehicle when its wheels are stuck in mud or deep snow

When turning off the Vehicle Dynamics Control system during engine operation, the Vehicle Dynamics Control OFF indicator light on the combination meter illuminates. The Vehicle Dynamics Control system will be deactivated. When “Vehicle Dynamics Control” has been touched again to reactivate the Vehicle Dynamics Control system, the Vehicle Dynamics Control OFF indicator light turns off.

You should not deactivate the Vehicle Dynamics Control system except under the above-mentioned situations.

⚠ CAUTION

The Vehicle Dynamics Control system helps prevent unstable vehicle motion such as skidding using control of the brakes and engine power. Do not turn off the Vehicle Dynamics Control system unless it is absolutely necessary. If you must turn off the Vehicle Dynamics Control sys-

– CONTINUED –

tem, drive very carefully based on the road surface condition.

NOTE

- **When "Vehicle Dynamics Control" has been touched to deactivate the Vehicle Dynamics Control system, the Vehicle Dynamics Control system automatically reactivates itself the next time the ignition switch is turned to the "OFF" position and the engine is restarted.**
- **When "Vehicle Dynamics Control" has been touched to deactivate the Vehicle Dynamics Control system, the vehicle's running performance is comparable with that of a vehicle that does not have a Vehicle Dynamics Control system. Do not deactivate the Vehicle Dynamics Control system except when absolutely necessary.**
- **Even when the Vehicle Dynamics Control system is deactivated, components of the brake control system may still activate. When the brake control system is activated, the Vehicle Dynamics Control operation indicator light flashes.**

7-14. Tire Pressure Monitoring System (TPMS) (U.S.-Spec. Models)

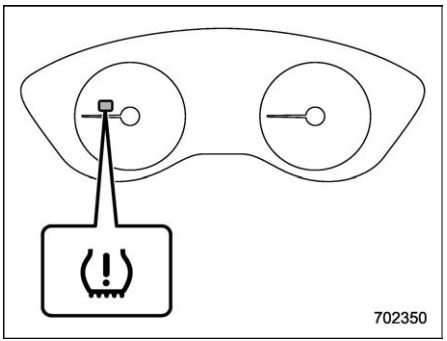

Low tire pressure warning light

The tire pressure monitoring system provides the driver with a warning message by sending a signal from a sensor that is installed in each wheel when tire pressure is severely low.

The tire pressure monitoring system will activate only when the vehicle is driven at speeds above 25 mph (40 km/h). Also, this system may not react immediately to a sudden drop in tire pressure (for example, a blow-out caused by running over a sharp object).

⚠ WARNING

- **If the low tire pressure warning light illuminates while driving, never brake suddenly. Instead, perform the following procedure. Otherwise an accident involving serious vehicle damage and serious personal injury could occur.**
  (1) Keep driving straight ahead while gradually reducing speed.
  (2) Slowly pull off the road to a safe place.
  (3) Check the pressure for all four tires and adjust the pressure to the COLD tire pressure shown on the tire inflation pressure label on the door pillar on the driver's side.

  Even when the vehicle is driven a very short distance, the tires get warm and their pressures increase accordingly. Be sure to let the tires cool thoroughly before adjusting their pressures to the standard values shown on the tire inflation pressure label. Refer to "Tires and Wheels" ☞P460. The tire pressure monitoring system does not function when the

vehicle is stationary. After adjusting the tire pressures, increase the vehicle speed to at least 25 mph (40 km/h) to start the TPMS rechecking of the tire inflation pressures. If the tire pressures are now above the severe low pressure threshold, the low tire pressure warning light should turn off a few minutes later.

If this light still illuminates while driving after adjusting the tire pressure, a tire may have significant damage and a fast leak that causes the tire to lose air rapidly. If you have a flat tire, refer to "Flat Tires" ☞P407.

- When a replacement tire is mounted or a wheel rim is replaced without the original pressure sensor/transmitter being transferred, the low tire pressure warning light will illuminate steadily after blinking for approximately one minute. This indicates the TPMS is unable to monitor all four road wheels. Contact your SUBARU dealer as soon as possible for tire and sensor replacement and/or system resetting.
- When a tire is repaired with liquid sealant, the tire pressure warning valve and transmitter may not operate properly. If a liquid sealant is used, contact your nearest SUBARU dealer or other qualified service shop as soon as possible. Make sure to replace the tire pressure warning valve and transmitter when replacing the tire. You may reuse the wheel if there is no damage to it and if the sealant residue is properly cleaned off. Do not inject any tire liquid or aerosol tire sealant into the tires, as this may cause a malfunction of the tire pressure sensors. If the light illuminates steadily after blinking for approximately one minute, promptly contact a SUBARU dealer to have the system inspected.

⚠ CAUTION

Do not place metal film or any metal parts under the driver's seat. This may cause poor reception of the signals from the tire pressure sensors, and the tire pressure monitoring system will not function properly.

■ Certification for Tire Pressure Monitoring System

▼ U.S.-spec. models

⚠ CAUTION

FCC WARNING

Changes or modifications not expressly approved by the party responsible for compliance could void the user's authority to operate the equipment.

NOTE

This device complies with part 15 of the FCC Rules. Operation is subject to the following two conditions: (1) This device may not cause harmful interference, and (2) this device must accept any interference received, including

– CONTINUED –

interference that may cause undesired operation.

■ TPMS Screen

306204

This screen displays each tire pressure. Refer to “Basic Screens” ☞P182.

7-15. Parking Your Vehicle

⚠ WARNING

- **Never leave unattended children or pets in the vehicle. They could accidentally injure themselves or others through inadvertent operation of the vehicle. Also, on hot or sunny days, the temperature in a closed vehicle could quickly become high enough to cause severe or possibly fatal injuries to them.**
- **Do not park the vehicle over flammable materials such as dry grass, waste paper or rags, as they may burn easily if they come near hot engine or exhaust system parts.**
- **Be sure to stop the engine if you take a nap in the vehicle. If engine exhaust gas enters the passenger compartment, occupants in the vehicle could die from carbon monoxide (CO) contained in the exhaust gas.**

■ Electronic Parking Brake

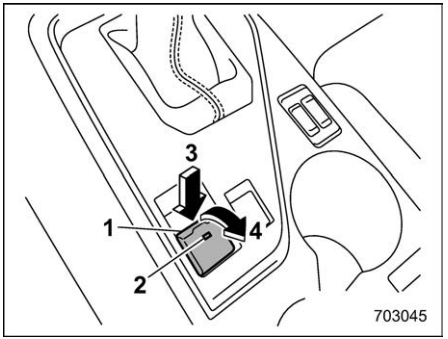

1 Electronic parking brake switch
2 Indicator light
3 Release the electronic parking brake
4 Apply the electronic parking brake

⚠ WARNING

- **Before exiting the vehicle, make sure that you turn off the engine. Otherwise, the parking brake may be released and an accident may occur.**
- **If the brake system warning light turns on, the electronic parking brake system may be malfunctioning. Immediately stop your vehicle in a safe location, use tire stops under the tires to prevent**

the vehicle from moving and contact your SUBARU dealer.

- **If the electronic parking brake is operated under the following conditions, the electronic parking brake indicator light may flash.**
  - **The brake is overheated.**
  - **The vehicle is on a steep slope.**

  In such cases, the vehicle may start to move which may lead to an accident. Always use the tire stops.

CAUTION

- **When the electronic parking brake cannot be applied due to a malfunction, contact your SUBARU dealer immediately for an inspection. If you have to park your vehicle in such conditions, perform the following procedure.**
  - **Stop your vehicle in a flat location.**
  - **Shift the select lever in the "P" position. When the select lever cannot be shifted into the "P" position, you must release shift lock. Refer to "Shift Lock Function" ☞P326.**
  - **Use tire stops under the tires to prevent the vehicle from moving.**
- **Never drive with the parking brake applied. Doing so will cause unnecessary brake pad wear. Before driving off, always make sure that the parking brake has been released and the brake system warning light has turned off.**

Your vehicle is equipped with an electronic parking brake. You can apply/release the parking brake by operating the parking brake switch.

To apply: Depress the brake pedal and pull up the parking brake switch.

To release: Press the parking brake switch firmly while the ignition switch is in the "ON" position and the brake pedal is depressed.

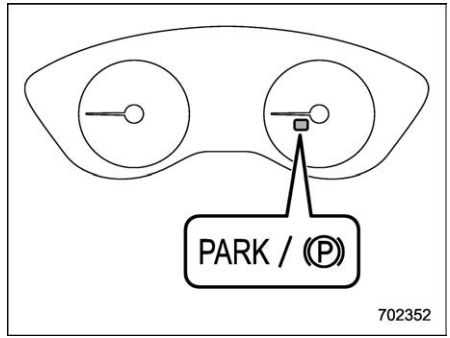

Electronic parking brake indicator light

When the parking brake is applied while the ignition switch is in the "ON" position, the following indicator lights illuminate.

- The indicator light on the parking brake switch
- The electronic parking brake indicator light on the combination meter (for details, refer to "Electronic Parking Brake Indicator Light" ☞P164.)

NOTE

- **The parking brake will not be released under the following conditions even if the parking brake switch is pressed.**
  - **The ignition switch is in the "ACC" or "LOCK"/"OFF" position.**

– CONTINUED –

– The brake pedal is not depressed.

- The electronic parking brake system uses motors to apply the parking brake. Therefore, operating sounds from the motors will be heard when applying or releasing the parking brake. Make sure that the motor sounds are heard when applying or releasing the parking brake.
- When the electronic parking brake system has a malfunction or the electronic parking brake operation is prohibited temporarily, if the parking brake switch is operated, a chirp sound is heard and the electronic parking brake indicator light flashes.
- When you cannot release the parking brake due to, for example, a system malfunction, contact your SUBARU dealer and have your SUBARU dealer release the parking brake.
- If the operation of the electronic parking brake switch is stopped midway or performed extremely slowly, the system may detect an error and turn on the brake system warning light. However, this does not indicate a malfunction if the warning light turns off after operating the switch.
- When the electronic parking brake has not been used for a long period of time, the electronic parking brake may operate automatically after the ignition switch is turned to the "LOCK"/"OFF" position. This occurs due to checking the proper operation of the electronic parking brake and does not indicate a malfunction.
- If the electronic parking brake switch is malfunctioning and the electronic parking brake cannot be released, refer to the instructions described in "Automatic release function by accelerator pedal" ☞P342.
- After activating the electronic parking brake, you may hear a short sound several minutes after the electronic parking brake indicator light and the indicator light on the electronic parking brake switch illuminate as the system confirms proper engagement. This sound is different from the apply and release sound.
  This can occur:
  – If the brakes are extremely hot.
  – If the car is parked on a steep incline.
  – If the electronic parking brake is applied after the ignition switch is turned OFF.
  This is a normal operating sound under any of these conditions.
- The Auto Start Stop system is deactivated while the electronic parking brake is applied.
- If you operate the electronic parking brake switch while the Auto Start Stop system is activated, the Auto Start Stop system will be deactivated. The electronic parking brake will activate after the engine is restarted. After the electronic parking brake indicator light is illuminated, release your foot from the brake pedal.
- When starting the engine or restarting the engine using the Auto Start Stop system, if you operate the electronic parking brake switch, the electronic parking brake indicator light may flash temporarily. However, this is not a malfunction if the light turns off after the electronic parking brake is deactivated.

▼ Automatic release function by accelerator pedal

The electronic parking brake system has an automatic release function. The parking brake will be automatically released by

depressing the accelerator pedal. However, the automatic release function does not operate under the following conditions.

- Any door (other than the rear gate) is open.
- The driver's seatbelt is not fastened.

If the parking brake is automatically released, the electronic parking brake indicator light and the indicator light on the parking brake switch turn off.

NOTE

Even if you have applied the parking brake, the parking brake will be automatically released when the accelerator pedal is depressed.

▼ Auto Vehicle Hold function

The Auto Vehicle Hold function will automatically keep the vehicle stopped even after releasing the brake pedal when the vehicle is at a complete stop, such as at traffic signals.

⚠ WARNING

- **Do not use the Auto Vehicle Hold function on a steep hill or slippery road. The vehicle may move even when using the Auto Vehicle Hold function, causing serious injury or accidents.**
- **Do not use the Auto Vehicle Hold function to park the vehicle. The vehicle may move unexpectedly, causing serious injury or accidents. Make sure to shift the select lever to the "P" position and apply the electronic parking brake in the following cases.**
  - **When you are going to park your vehicle.**
  - **When passengers are getting in or out of the vehicle.**
  - **When you are loading or unloading.**
- **When using the Auto Vehicle Hold function, do not release the brake pedal before the Auto Vehicle Hold operation indicator illuminates. The vehicle may move unexpectedly, causing serious injury or accidents.**
- **Deactivate the Auto Vehicle Hold function in the following cases. Otherwise, the vehicle may move unexpectedly, causing serious injury or accidents.**
  - **When washing your vehicle in an automatic car wash**
  - **When being towed**

⚠ CAUTION

- **When stopping on a steep slope with the Auto Vehicle Hold function turned on, the electronic parking brake may be automatically applied. Then the electronic parking brake indicator light will flash. In such a case, depress and hold the brake pedal while stopping. Otherwise, the vehicle may move.**
- **When being towed, turn off the Auto Vehicle Hold function.**

NOTE

We recommend turning on the Auto Vehicle Hold function when stopping on an incline. If the Auto Vehicle Hold function is turned off, the vehicle may roll backward when driving off.

– CONTINUED –

▽ **To turn on/off the Auto Vehicle Hold function**

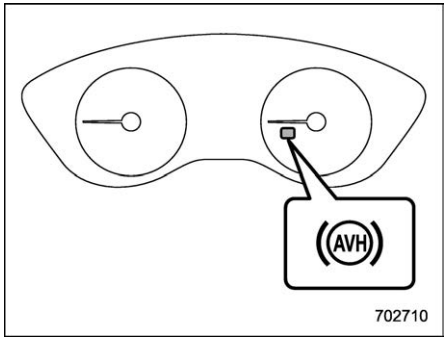

Auto Vehicle Hold indicator light

To turn the Auto Vehicle Hold function on and off, operate the center information display. Refer to “Auto Vehicle Hold (AVH) ON/OFF icon” ☞P192 (11.6-inch display models) or “Vehicle setting icons” ☞P219 (dual 7.0-inch display models).

When the Auto Vehicle Hold function is turned ON, the Auto Vehicle Hold indicator light will turn on.

NOTE

- **When the electronic parking brake system has a malfunction while the Auto Vehicle Hold function is turned on, a chirp will sound, the Auto Vehicle Hold indicator light will turn off and the brake system warning light will turn on.**
- **Every time when starting the engine, the Auto Vehicle Hold function will be set to “OFF”.**

▽ **To operate the Auto Vehicle Hold function**

Stop the vehicle by depressing the brake pedal when all of the following conditions are met. Then the Auto Vehicle Hold function will operate.

- Driver’s door is closed.
- The driver’s seatbelt is fastened.
- The select lever is in a position other than the “P” position.

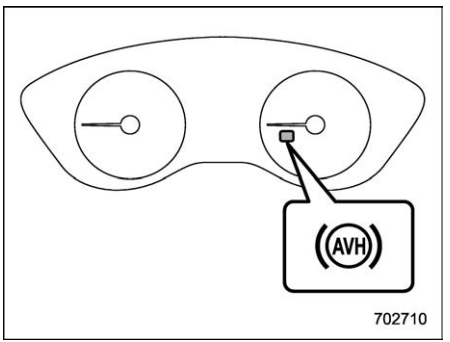

Auto Vehicle Hold indicator light

While the vehicle is kept stopped by the Auto Vehicle Hold function, the Auto Vehicle Hold indicator light will flash.

▽ **To release the Auto Vehicle Hold function**

Perform any of the following operations to release the Auto Vehicle Hold function.

- Depress the accelerator pedal.
- Depress the brake pedal again.
- Apply the electronic parking brake.
- Shift the select lever to the “P” position with the brake pedal pressed.
- Deactivate the Auto Vehicle Hold function operating with the center information display while depressing the brake pedal.

When the Auto Vehicle Hold function is released, the Auto Vehicle Hold indicator light will change from flashing to illuminated.

Under any of the following conditions, the Auto Vehicle Hold function will be automatically released and the electronic parking brake will be automatically applied.

- The Auto Vehicle Hold function has been in operation for 10 minutes.
- The driver’s seatbelt is unfastened.
- The ignition switch is turned to the

"LOCK"/"OFF" position.

- The vehicle is stopped on a steep slope.
- The Auto Vehicle Hold function is malfunctioning.

In such cases, the Auto Vehicle Hold indicator light will turn off and the electronic parking brake indicator light will illuminate.

▽ **Tips**

- When the electronic parking brake is automatically applied with the vehicle kept stopped by the Auto Vehicle Hold function, release the electronic parking brake by either of the following operations before starting off. Then make sure that the electronic parking brake indicator light is off.
  - Depress the accelerator pedal with the driver's seatbelt fastened and with the doors closed.
  - Press the electronic parking brake switch with the brake pedal depressed.
- Under certain conditions, including a malfunction of the Auto Vehicle Hold, a warning buzzer will sound and a warning message will appear on the combination meter display (color LCD). All warning messages should be strictly observed.
- On a steep slope, the vehicle cannot be kept stopped by the Auto Vehicle Hold function. In such a case, depress and hold the brake pedal.
- When stopping on a steep slope with the Auto Vehicle Hold function activated, the electronic parking brake may be automatically applied after stopping, then the electronic parking brake indicator light may flash. In such a case, depress and hold the brake pedal while stopped. Otherwise, the vehicle may move. When getting out of the vehicle, stop the vehicle on a flat surface, then apply the electronic parking brake.
- If the Auto Vehicle Hold indicator light does not illuminates even after touching "Auto Vehicle Hold (AVH)" with the operating conditions met, the function may have a malfunction. Contact your SUBARU dealer for an inspection.
- You may hear a sound while the Auto Vehicle Hold function is keeping your vehicle stopped. This is normal, and does not represent a malfunction.
- When you depress the brake pedal to release the Auto Vehicle Hold function, an operation sound or vibration may be generated, or the brake pedal may return slowly. This is not a malfunction.
- While the vehicle is kept stopped by the Auto Vehicle Hold function, the brake pedal may feel stiff. However, this is not a malfunction.
- When using the Auto Vehicle Hold function, depress the brake pedal firmly. Otherwise, the Auto Vehicle Hold may not operate.

▼ **Emergency brake**

⚠ CAUTION

Use the emergency brake only in case of an emergency. If the emergency brake is excessively used, the brake parts will wear down faster or the brake may not work sufficiently due to brake overheating.

NOTE

- **While using the emergency brake, the electronic parking brake indicator light and the indicator light on the parking brake switch illuminate and a chirp sounds.**
- **While using the emergency brake, a sound may be heard from the engine compartment. This is the operating sound of the brake that is activated by the Vehicle Dynamics Control system, and does not indicate a malfunction.**

– CONTINUED –

If the foot brake has a malfunction, you can stop the vehicle by pulling the parking brake switch continuously.

While applying the emergency brake, the electronic parking brake indicator light and the indicator light on the parking brake switch illuminate and a chirp sounds.

▼ **Electronic parking brake system warning**

CAUTION

If the brake system warning light turns on, the electronic parking brake system may be malfunctioning. Immediately stop your vehicle in the nearest safe location and contact your SUBARU dealer.

If a malfunction occurs in the electronic parking brake system, the brake system warning light turns on. Refer to “Electronic parking brake system warning” ☞P164.

■ Parking Tips

When parking your vehicle, always perform the following items.

- Apply the parking brake.
- Place the select lever in the “P” (Park) position.

Never rely on the transmission alone to hold the vehicle.

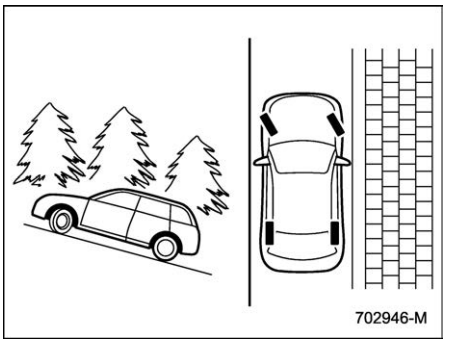

When parking on a hill, always turn the steering wheel as described here. When the vehicle is headed up the hill, the front wheels should be turned away from the curb.

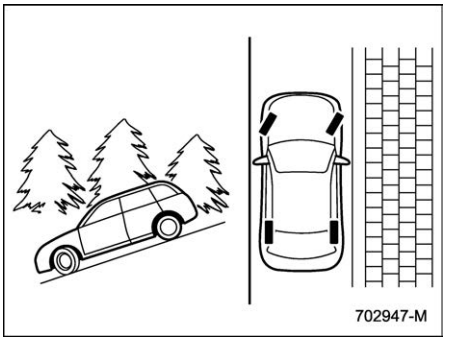

When facing downhill, the front wheels should be turned into the curb.

7-16. Hill Start Assist System

CAUTION

- **The Hill start assist system is a device only for helping the driver to START the vehicle on an uphill grade. To prevent accidents when the vehicle is parked on a slope, be sure to firmly set the parking brake. When setting the parking brake, make sure that the vehicle remains stationary when the brake pedal is released.**
- **Do not turn the ignition switch to the "OFF" position while the Hill start assist system is operating. The Hill start assist system will deactivate, causing an accident.**

The Hill start assist system is a device to make the following vehicle operations easier.

NOTE

- **The Hill start assist system will activate when the Auto Vehicle Hold function is deactivated.**
- **The Hill start assist system will deactivate when the Auto Vehicle Hold function is activated.**

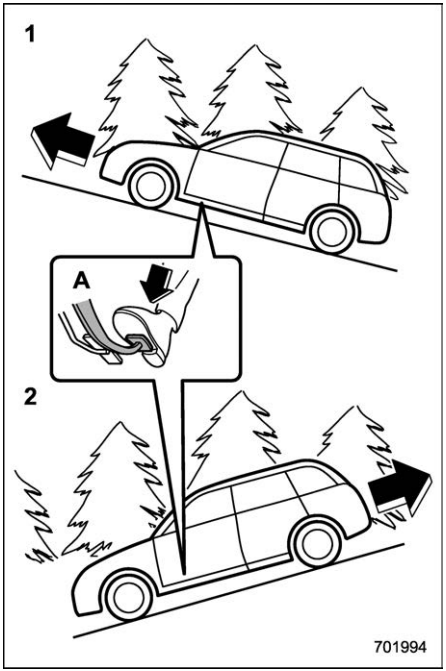

1 Starting forward facing uphill
2 Starting backward facing downhill
A Brake pedal

In both these cases, the Hill start assist system operates under the following condition.

- When the vehicle has stopped with the brake pedal depressed.

Braking power is maintained temporarily (for approximately 2 seconds) by the Hill start assist system after the brake pedal is released. The driver is therefore able to start the vehicle in the same way as on a level grade, just using the accelerator pedal.

If the braking power of the Hill start assist system is insufficient after the brake pedal is released, apply more braking power by depressing the brake pedal again.

The Hill start assist system may not operate on slight grades. Also, the Hill start assist system does not operate in the following cases.

– CONTINUED –

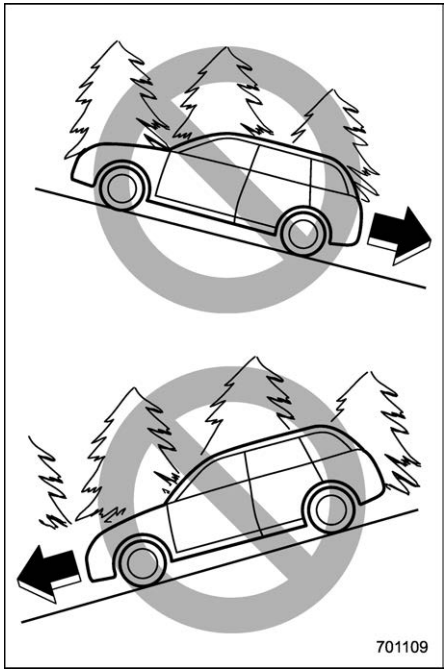

- When starting backward facing uphill
- When starting forward facing downhill
- While the parking brake is applied
- While the ignition switch is in the “ACC” or “OFF” position
- While the Vehicle Dynamics Control warning light is illuminated. Refer to “Vehicle Dynamics Control Warning Light/Vehicle Dynamics Control Operation Indicator Light” ☞P167.
- While the Auto Start Stop warning light is illuminated. Refer to “Auto Start Stop Warning Light (Yellow)” ☞P175.

When starting in reverse and using the Hill start assist system, a braking effect may be felt even after the brake pedal has been released.

NOTE

A slight jolt may be felt when the vehicle begins to move forward after being reversed.

7-17. Auto Start Stop System

The Auto Start Stop system is designed to automatically stop and restart the engine when the vehicle is stationary for a short period of time (while waiting for a traffic light or in a traffic jam) after the engine has warmed up. The system operates in order to reduce fuel consumption, exhaust emissions and undesired idling noise.

■ System Operation

⚠ WARNING

Turn off the Auto Start Stop system before towing the vehicle.

⚠ CAUTION

The Auto Start Stop system is designed to automatically stop and restart the engine for a short period of time during idling. Do not use the system when parking the vehicle normally.

So that it can be used safely and comfortably, in addition to driver operations, the Auto Start Stop system is designed to constantly monitor the vehicle conditions

as well as the environment inside and outside the vehicle, in order to control stopping and restarting of the engine.

After the vehicle has been completely stopped by depressing the brake pedal with the select lever in the “D” position, the engine will be automatically stopped.

If you release the brake pedal with the select lever kept in the “D” position, the engine will be automatically restarted.

However, when the Auto Vehicle Hold indicator light illuminates, the engine will not restart.

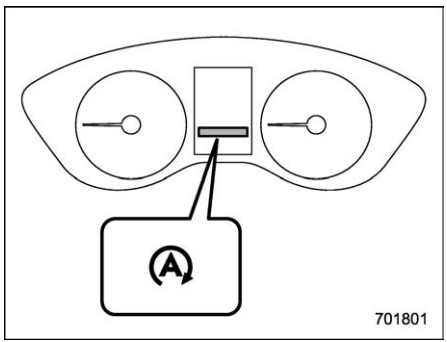

Auto Start Stop indicator light (green)

If the engine is temporarily stopped by the system, the Auto Start Stop indicator light on the combination meter will illuminate in green. This indicator light will turn off when the system restarts the engine.

NOTE

- **After starting the engine, if the vehicle is left idling without being driven, the Auto Start Stop system will not operate.**
- **Your vehicle is equipped with a special high-performance battery. When replacing the vehicle battery, be sure to replace it with a genuine SUBARU battery (or equivalent) designed specifically for use in a vehicle equipped with the Auto Start Stop system. For details, we recommend that you consult your SUBARU dealer.**

▼ Operational conditions

The engine can be automatically stopped by the Auto Start Stop system when all of the following conditions are met.

- The engine is sufficiently warmed up.
- The engine hood is closed.
- The driver’s door is closed.
- The driver’s seatbelt is fastened.
- The CHECK ENGINE warning light/ malfunction indicator light is off.*1
- The airflow mode selection is set to a mode other than “” mode.
- The rear window defogger is not in use.

After the vehicle is stopped, the engine will be automatically stopped when the following conditions are met.

- The steering wheel is in the straight ahead position.
- The steering wheel is not being operated.

*1: Even if the CHECK ENGINE warning light/ malfunction indicator light is illuminated, the Auto Start Stop system may operate when the system recovers from the malfunction.

NOTE

- **After the vehicle is stopped, the engine may not automatically stop under the following conditions.**
  - **The vehicle is stopped on a road with a steep slope.**
  - **The vehicle is stopped by hard braking.**
- **After the vehicle is stopped, the engine may not automatically stop if the brake pedal is not fully depressed. Make sure to depress the brake pedal firmly when stopping the vehicle.**
- **In the following cases, it may take some time for the Auto Start Stop system to operate.**
  - **When the battery is discharged because the vehicle has not been**

– CONTINUED –

used for a long period of time, etc.
- **The coolant temperature is low.**
- **When the battery terminals have been reconnected after replacing the battery, etc.**

▼ Non-operational conditions

In any of the following cases, the Auto Start Stop system will not operate.

- When the Auto Start Stop warning light/ Auto Start Stop OFF indicator light is illuminating.
- When the CHECK ENGINE warning light/malfunction indicator light is illuminating.*1
- The electronic parking brake is applied.
- When the engine hood is opened.
- When the CVT fluid is not sufficiently warmed up.
- When the temperature of the CVT fluid is abnormally high.
- When the vehicle battery is not in good condition.
- When using the climate control system, the temperature difference between the setting temperature and the temperature inside the vehicle is significant.
- When using the climate control system, the amount of air flow is significant.

*1: Even if the CHECK ENGINE warning light/ malfunction indicator light is illuminated, the Auto Start Stop system may operate when the system recovers from the malfunction.

NOTE

The Auto Start Stop system may not operate in the following cases:

- **The CHECK ENGINE warning light/ malfunction indicator light or other warning lights on the combination meter are illuminated or flashing.**
- **You are driving the vehicle in a high-elevation area.**

▼ Engine restart operational conditions

In any one of the following cases, the engine will be automatically restarted even if the brake pedal is kept depressed.

- When slightly releasing the brake pedal on road with a steep slope and the vehicle begins rolling.
- When further depressing the brake pedal.
- When depressing the accelerator pedal.
- When you move the select lever to the “R” position.
- When turning the steering wheel.
- When operating the electronic parking brake switch.
- When the air flow mode selection set to “⊞” mode.
- When the climate control system can no longer maintain the set temperature.
- When unbuckling the driver’s seatbelt.
- When opening the driver’s door.
- When activating the rear window defogger.
- When the Auto Vehicle Hold function is released, refer to “Auto Vehicle Hold function” ☞P343.

▼ Engine restart non-operational conditions

⚠ WARNING

Do not open the engine hood when the Auto Start Stop system is in operation. It may cause the vehicle to move while on a slope, the steering wheel operation may become heavy, or the brakes may not work well, which can create dangerous conditions.

To ensure safety, the engine will not be automatically restarted if the engine hood is opened when the Auto Start Stop system is in operation, even if the brake

pedal is released. In this case, check the surrounding area and restart the engine by normal operation.

Also, when the Auto Vehicle Hold operation indicator light is illuminated, the engine will not restart.

NOTE

- **When the Auto Start Stop system is in operation, the brake pedal may feel stiff. However, this is not a malfunction.**
- **When the battery is discharged, the engine will be automatically restarted even if you keep the brake pedal depressed.**
- **In the following cases, the length of time that the engine is temporarily stopped by the Auto Start Stop system may be shorter.**
  - **When the climate control system is in operation.**
  - **When the outside temperature is high, or when it is low (because the climate control system can no longer maintain the set temperature).**
  - **When consumption of electricity by electrical components is high.**
- **When the engine is automatically restarted by the Auto Start Stop system, the power provided via the accessory power outlet will be reduced. Depending on the connected appliance, the power of the appliance may temporarily turn off.**

▼ Auto Start Stop warning light

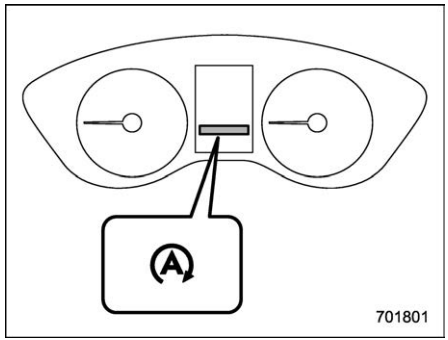

Auto Start Stop warning light (yellow)

The Auto Start Stop warning light will illuminate in yellow when initially turning the ignition switch to the “ON” position. The light will turn off after the engine has started.

⚠ CAUTION

If the Auto Start Stop warning light does not turn off after the engine has started, the Auto Start Stop system may be malfunctioning. Contact your authorized SUBARU dealer for an inspection.

▼ To turn on/off the Auto Start Stop system

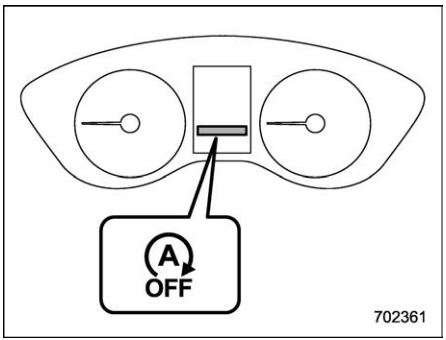

Auto Start Stop OFF indicator light

To turn the Auto Start Stop system on and off, operate the center information display. Refer to “Car settings” ☞P201 (11.6-inch display models) or “Vehicle setting icons” ☞P219 (dual 7.0-inch display models).

When the Auto Start Stop system is turned OFF, the Auto Start Stop OFF indicator light on the combination meter display (color LCD) will illuminate.

While the engine is temporarily stopped by the system, if the Auto Start Stop system turns off, the engine will be restarted even if you do not release the brake pedal.

– CONTINUED –

NOTE

- **If the engine is restarted when the Auto Start Stop system is not operational and the ignition switch has been turned to the "OFF" position, the Auto Start Stop system will turn on again.**
- **Be sure to turn the ignition switch to the "OFF" position when leaving the vehicle. Failure to do so could result in the battery discharging.**

▼ Auto Start Stop No Activity Detected indicator light

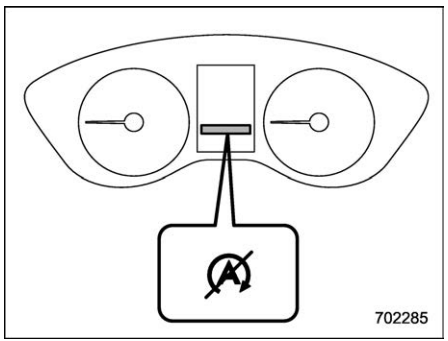

Auto Start Stop No Activity Detected indicator light

If the operational conditions are not met when the vehicle is stopped, the engine will not stop and the Auto Start Stop No Activity Detected indicator light will illuminate. It will turn off when the vehicle begins to drive.

■ Displaying the Auto Start Stop System Status

Approximate indications of the time that the engine has been stopped by the Auto Start Stop system and/or the amount of fuel saved can be displayed on the combination meter display (color LCD). For details, refer to "Basic Screens" ☞P182.

■ System Warning

So that it can be used safely and comfortably, the Auto Start Stop system is designed to constantly monitor the vehicle conditions as well as the environment inside and outside the vehicle in addition to driver operations, and to provide various warnings to the driver via the warning light and/or indicator light illuminating and a buzzer sounding. For details about the warning light and indicator light, refer to "Auto Start Stop Warning Light (Yellow)" ☞P175.

▼ Warning buzzer

The buzzer will sound when the engine hood is opened while the engine is stopped by the Auto Start Stop system.

When this occurs, the buzzer will stop sounding when the following operations are performed.

- The engine is restarted by normal operation. (Refer to "Preparing to Drive" ☞P311.)
- The ignition switch is turned to the "OFF" position.

▼ Display of warning messages

If a warning message is displayed on the combination meter display (color LCD) while driving, a malfunction may have occurred in the Auto Start Stop system. In this case, the Auto Start Stop warning light will illuminate. Have your vehicle inspected at a SUBARU dealer as soon as possible.

7-18. Rear View Camera

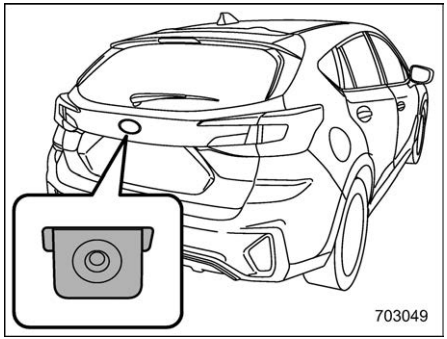

A rear view camera is attached to the rear gate. When the ignition switch is in the "ON" position and the select lever is set to "R", the rear view camera automatically displays the rear view image behind the vehicle on the center information display.

WARNING

- **Since the rear view camera uses a wide-angle lens, the image on the monitor is different from the actual view in terms of distance.**
- **Since the range of the image on the monitor is limited, always check the rear view and the surrounding area with your eyes and mirrors, and move backward at a slow speed. Moving backward only by checking the rear view image from the camera could cause an accident.**
- **Do not disassemble or modify the camera, switch or wiring. If smoke comes out or you smell a strange odor, stop using the rear view camera immediately. Contact your SUBARU dealer for an inspection. Continued use may result in accident, fire or electric shock.**

CAUTION

- **When washing your vehicle with a high-pressure washer, do not allow water to touch the camera directly. Entry of water in the camera lens may result in condensation, malfunction, fire or electric shock.**
- **Since the camera is a precision device, do not subject it to strong impacts. Otherwise, malfunction, fire or electric shock may occur.**
- **If mud or snow sticks to or is frozen on the camera, you must be very careful when removing it. Otherwise, damage to the camera may cause a fire or electric shock. Pour water or lukewarm water over the camera to remove mud and ice, and wipe it with a soft, dry cloth.**
- **Do not put a flame close to the camera or wiring. Otherwise, damage or fire may occur.**
- **When replacing the fuse, be sure to use a fuse with the specified rating. Use of a fuse with a different rating may result in a malfunction.**
- **If you use the rear view camera for a long time while the engine is not operated, the battery may become completely discharged.**

NOTE

- **Do not wipe the camera with alcohol, benzine or paint thinner. Otherwise, discoloration may occur. To remove contamination, wipe the camera with a cloth moistened with a diluted neutral detergent. Then wipe it with a soft, dry cloth.**
- **When waxing the vehicle, be careful not to apply the wax to the camera. If it comes in contact with the camera, moisten a clean cloth with a diluted**

– CONTINUED –

neutral detergent to remove the wax.

- **The camera lens has a hard coating to help prevent scratches. However, when washing the vehicle or cleaning the camera lens, be careful not to scratch the camera lens. Do not use a washing brush directly on the camera lens. The image quality of the rear view camera may deteriorate.**
- **Strong light shined on the camera lens may develop vertical lines around the light source. This is not a malfunction.**
- **Under the fluorescent light, the display may flicker. However, this is not a malfunction.**
- **The image of the rear view camera may be slightly different from the actual color of the objects.**
- **If there is a malfunction on the center information display, refer to "Malfunctions of the Center Information Display" ☞P428.**

■ How to Use the Rear View Camera

When the select lever is set to "R", the rear view camera automatically displays the rear view image from the vehicle. When the lever is set to other positions, the image before setting to "R" is displayed.

1. Set the ignition switch to "ON".
2. Set the select lever to "R".

NOTE

- **The image of the rear view camera is horizontally reversed as is the case with the vehicle inside mirror or the outside mirror.**
- **When "Rear Camera Delay Control" is on, the rear view image will be displayed on the center information display for a certain period of time after the select lever is shifted to a position other than the "P" position from "R". To turn the function on and off, refer to "General settings" ☞P196 (11.6-inch display models) or "General settings" ☞P213 (dual 7.0-inch display models).**
- **It may be difficult to see the image of the rear view camera in the following cases. This is not a malfunction of the camera.**
  - **The vehicle is in a dark place (at night, in a tunnel, etc.).**
  - **The vehicle is in an extremely hot or cold place.**
  - **An object (such as raindrops, snow, dirt, etc.) that disturbs the view of the rear view camera sticks to the lens of the camera.**
  - **Strong light is shining directly on the camera lens (occasionally, there are vertical lines on the screen).**

■ Viewing Range on the Screen

⚠ CAUTION

The range that can be viewed with the rear view camera is limited. Always be sure to check with your eyes when moving backward and proceed slowly. Otherwise, it may cause an accident or injury.

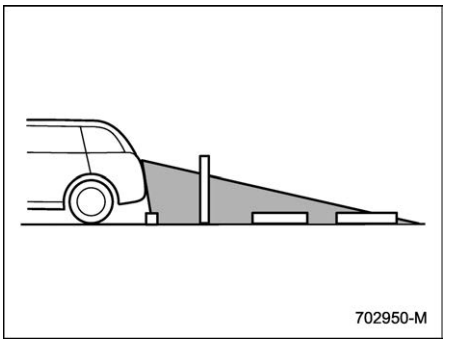

Range of view

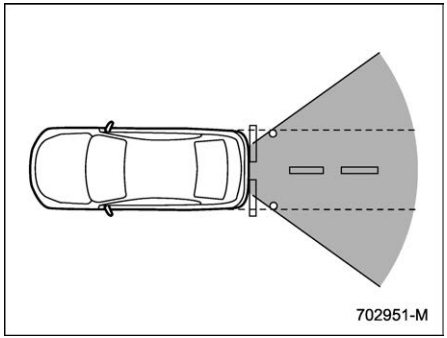

Range of view

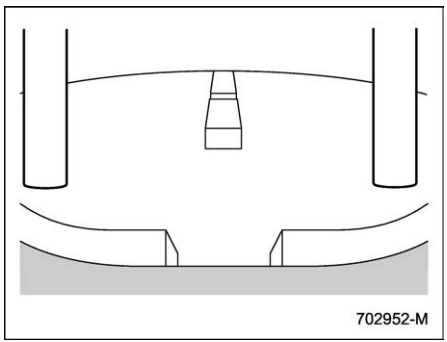

Image from camera

The area from the rear end of the bumper can be viewed. Areas at both ends of the bumper and areas just under the bumper cannot be viewed.

Also, the image from the rear view camera looks shorter than the actual distance.

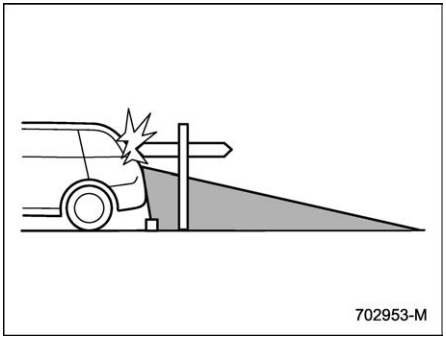

Range of view

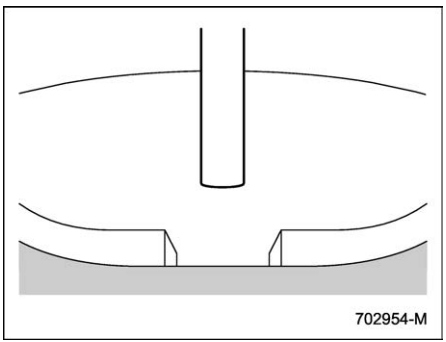

Image from camera

The area above the camera cannot be viewed. If there is an object that has a wide projection on its upper part such as a sign pole behind the vehicle, the projection cannot be seen on the screen.

■ Help Lines

The help lines are a guide to help you realize the actual distance from the screen image.

NOTE

If you shift to the “R” range within several seconds after turning on the ignition switch, the warning message may not be displayed. Wait for several seconds after turning on the ignition switch before shifting to the “R” range. Then, the warning message will be displayed.

– CONTINUED –

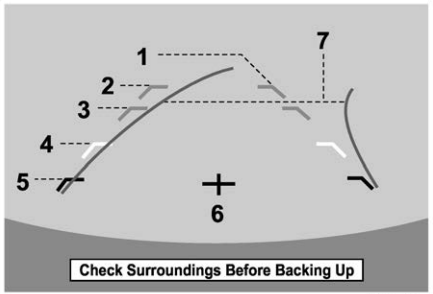

702392

Help lines

1 Vehicle width line (oblique vertical line)
2 Approx. 10 ft (3 m) from the bumper (green horizontal line)
3 Approx. 6 ft (2 m) from the bumper (green horizontal line)
4 Approx. 3 ft (1 m) from the bumper (yellow horizontal line)
5 Approx. 1.5 ft (0.5 m) from the bumper (red horizontal line)
6 Vehicle centerline
7 Dynamic guidelines

When the select lever is set to “R”, the monitor screen displays the help lines together with the rear view image.

CAUTION

- **When moving backward, always check the back with your eyes without relying on the help lines. Otherwise, it may cause an accident or injury.**
- **The actual position may be different from the indication of the help lines.**
- **Differences may occur due to the number of passengers or the loaded cargo.**
- **When the vehicle is on a slope or inclined against the road, the indication is different from the actual position.**

NOTE

When “Steering Angle Lines” is off, the dynamic guidelines will disappear on the center information display. To turn the dynamic guidelines on and off, refer to “General settings” ☞P196 (11.6-inch display models) or “General settings” ☞P213 (dual 7.0-inch display models).

▼ Difference between screen image and actual road

The distance markers show the distance for a level road when the vehicle is not loaded. It may be different from the actual distance depending on the loading conditions or road conditions.

▽ When there is an upward slope at the back

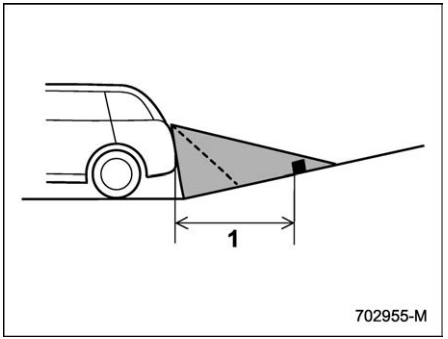

702955-M

1 3 ft (1 m)

The distance on the screen looks farther than the actual distance.

▽ **When there is a downward slope at the back**

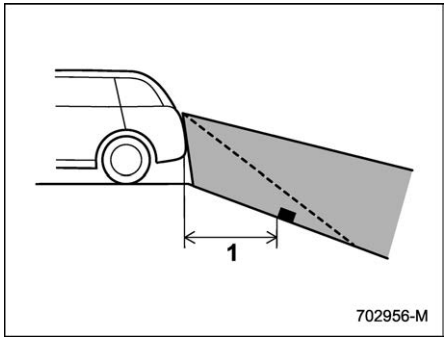

1 3 ft (1 m)

The distance on the screen looks nearer than the actual distance.

NOTE

When cargo is loaded, the rear view distance on the screen looks farther than the actual distance as in an upward slope.

▼ **Feature of distance marker**

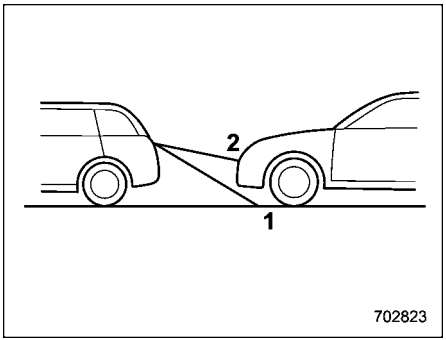

1 3 ft (1 m) line
2 10 ft (3 m) line

The distance marker shows the distance on the road. If there is a car or another object close behind, distance cannot be correctly displayed.

7-19. BSD/RCTA (If Equipped)

The BSD/RCTA consists of radar sensors with Blind Spot Detection and Rear Cross Traffic Alert.

These functions of BSD/RCTA are the systems that detect objects and vehicles to the rear and draw attention to the driver when changing a lane or when driving in reverse.

⚠ WARNING

The driver is responsible for driving safely. Always be sure to check the surroundings with your eyes when changing lanes or reversing the vehicle.

The system is designed to assist the driver in changing lanes or reversing safely by monitoring the rear and side areas of the vehicle. However, you cannot rely on this system alone in assuring the safety during a lane change or reversing. Overconfidence in this system could result in an accident and lead to serious injury or death. Since the system operation has various limitations, the flashing or illumination of the BSD/RCTA approach indicator light

– CONTINUED –

may be delayed, or the warning buzzer may be delayed or inoperative, even if there is a vehicle traveling in a neighboring lane or approaching your vehicle from either side.

The driver is responsible for paying attention to the rear and side areas of the vehicle.

■ System Features

BSD/RCTA consists of the following functions.

- To detect a vehicle in a blind spot on an adjacent lane or a vehicle approaching at high speed while driving the vehicle (Blind Spot Detection)
- To detect a vehicle approaching from the right or left while reversing the vehicle (Rear Cross Traffic Alert)

The system uses radar sensors for the following features.

NOTE

The BSD/RCTA radar sensor is approved under the radio wave related laws of each country. For details, refer to "Certification for the BSD/RCTA" ☞P365.

▼ Blind Spot Detection (BSD)

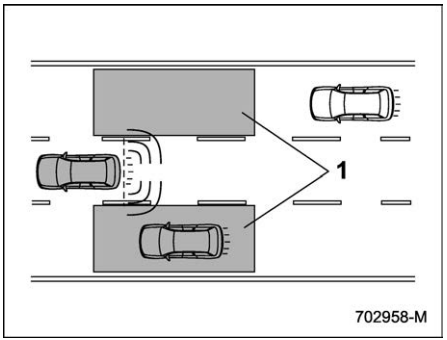

1 Operating range

The system notifies the driver of the presence of vehicles in its blind spot.

- If the system detects a vehicle in its blind spot, it warns the driver by illuminating the BSD/RCTA approach indicator light(s) on the outside mirror (s).
- If the driver operates the turn signal lever in the direction where the BSD/RCTA approach indicator light is illuminating, the system warns the driver of dangers by flashing the BSD/RCTA approach indicator light.

▽ Lane Change Assist (LCA)

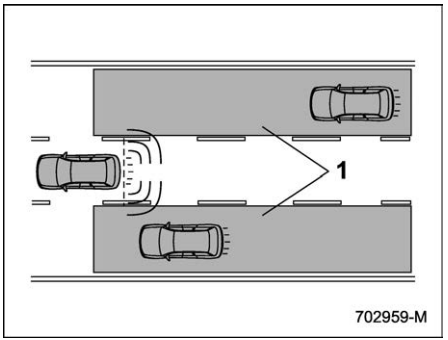

1 Operating range

The system notifies the driver of vehicles approaching at a high speed in the neighboring lanes.

- If the system detects a vehicle approaching at a high speed in the neighboring lanes, it warns the driver of dangers by illuminating the BSD/RCTA approach indicator light(s) on the outside mirror(s).
- If the driver operates the turn signal lever in the direction where the BSD/RCTA approach indicator light is illuminating, the system warns the driver of dangers by flashing the BSD/RCTA approach indicator light.

▼ Rear Cross Traffic Alert (RCTA)

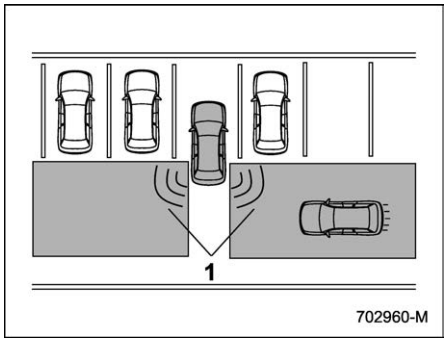

1 Operating range

The system notifies the driver of another vehicle approaching from either side when driving in reverse. This feature helps the driver check the rear and side areas of the vehicle when moving backward.

If the system detects a vehicle approaching from either side while moving backward, it warns the driver of dangers in the following way.

- The BSD/RCTA approach indicator light(s) on the outside mirror(s) flashes.
- A warning buzzer sounds.
- An icon appears on the center information display.

▽ Limitations of the detectability of RCTA

Since the detectability of RCTA is limited, the RCTA may not operate properly in angled parking.

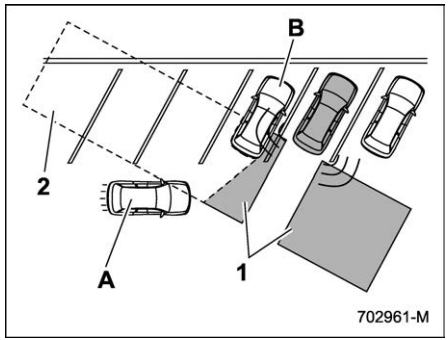

Example 1

1 The detection range of the radar sensors
2 Area out of detection range of the radar sensors
A Vehicle that may not be detected
B Parked vehicle

⚠ WARNING

An approaching vehicle (A) may not be detected because the detection range is limited by the parked vehicle (B). Always be sure to check the surroundings with your eyes when reversing the vehicle.

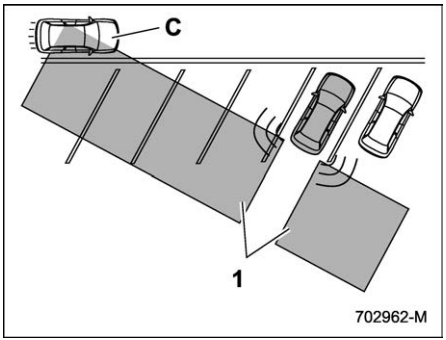

Example 2

1 The detection range of the radar sensors
C Vehicle that may be detected

NOTE

The system may detect that a vehicle (C) is passing in front of your vehicle. Always be sure to check the surroundings with your eyes when reversing the vehicle.

– CONTINUED –

■ System Operation

▼ Operating conditions

The BSD/RCTA will operate when all of the following conditions are met.

- The ignition switch is in the “ON” position.
- The BSD/RCTA warning indicator and BSD/RCTA OFF indicator are turned off.
- The vehicle is driven at speeds above 7 mph (12 km/h) (except when reversing).
- The select lever is in the “R” position (RCTA only).

The BSD/RCTA will not operate in the following situations.

- The BSD/RCTA OFF indicator appears.
- The vehicle speed is below 6 mph (10 km/h) even when the BSD/RCTA OFF indicator does not appear (except when reversing).

NOTE

- **In the following cases, the BSD/RCTA will stop operating and the BSD/RCTA warning indicator will appear.**
  - **When a malfunction occurs in the system, including the BSD/RCTA approach indicator light**
- **If the BSD/RCTA warning indicator appears, exercise proper caution. For details, refer to “BSD/RCTA Warning Indicator” ☞P364.**
- **In the following cases, the BSD/RCTA will temporarily stop operating (or may stop operating) and the BSD/RCTA OFF indicator will appear.**
  - **When the radar sensor becomes significantly misaligned (If the orientation of the radar sensor is shifted for any reason, readjustment is required. Have the sensor adjusted at a SUBARU dealer.)**
  - **When a large amount of snow or ice sticks to the rear bumper surface around the radar sensors**
  - **When the vehicle is driven on a snow-covered road or in an environment in which there are no objects around (such as in a desert) for a prolonged period of time**
  - **When the temperature around the radar sensors increases excessively due to long driving on uphill grades in the summer, etc.**
  - **When the temperature around the radar sensors becomes extremely low**
  - **When the vehicle battery voltage lowers**
  - **When the vehicle voltage exceeds the battery voltage rating**

  The BSD/RCTA will resume operation once these conditions are corrected, and the BSD/RCTA OFF indicator will disappear. However, if the BSD/RCTA OFF indicator appears for a prolonged period of time, have the system inspected at a SUBARU dealer as soon as possible.
- **The detectability of the radar sensors is restricted. The BSD/RCTA detection may be impaired and the system may not operate properly under the following conditions.**
  - **When the rear bumper around the radar sensors is distorted**
  - **When ice, snow or mud adheres to the rear bumper surface around the radar sensors**
  - **When stickers, etc. are affixed on the areas of the radar sensors on the rear bumper**
  - **During adverse weather conditions such as rain, snow or fog**
  - **When driving on wet roads such as snow-covered roads and through puddles**

- **The radar sensors may not detect or may have difficulty detecting the following vehicles and objects.**
  - **Small motorcycles, bicycles, pedestrians, stationary objects on the road or road side, etc.**
  - **Vehicles with body shapes that the radar may not reflect (vehicles with lower body height such as a trailer with no cargo and sports cars)**
  - **Vehicles that are not approaching your vehicle even though they are in the detection area (either on a neighboring lane to the rear or beside your vehicle when reversing) (The system determines the presence of approaching vehicles based on data detected by the radar sensors.)**
  - **Vehicles traveling at significantly different speeds**
  - **Vehicles driving in parallel at almost the same speed as your vehicle for a prolonged time**
  - **Oncoming vehicles**
  - **Vehicles in a lane beyond the neighboring lane**
  - **Vehicles traveling at a significantly lower speed that you are trying to overtake**
- **On a road with extremely narrow lanes, the system may detect vehicles driving in a lane next to the neighboring lane.**

■ BSD/RCTA Approach Indicator Light/Warning Buzzer

While the BSD/RCTA is active, the following item(s) will operate to alert the driver:

- The BSD/RCTA approach indicator light (when there are vehicles in the neighboring lanes).
- The BSD/RCTA approach indicator light and warning buzzer (when a vehicle is approaching from the left or right side while your vehicle is reversing)

▼ BSD/RCTA approach indicator light

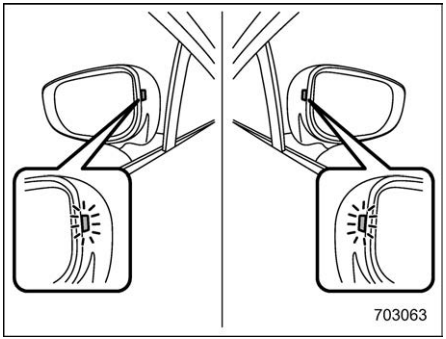

BSD/RCTA approach indicator light

It is mounted on each side of the outside mirrors.

The indicator light will illuminate when a vehicle approaching from behind is detected.

The indicator light will flash to warn the driver of dangers under the following conditions.

- While the indicator light is illuminating, if the turn signal lever is operated toward the side in which this light turned on
- When reversing the vehicle while the system detects a vehicle approaching from either side

– CONTINUED –

▽ **BSD/RCTA approach indicator light dimming function**

When the headlights are turned on, the brightness of the BSD/RCTA approach indicator light will be reduced.

NOTE

- **You may have difficulty seeing the BSD/RCTA approach indicator light under the following conditions.**
  - **When sunlight shines directly on it**
  - **When the headlight beams from a vehicle traveling behind shines directly on it**
- **While the illumination brightness control dial is in the fully upward position, even if the headlights are turned on, the brightness of the BSD/RCTA approach indicator light will not be reduced. For details about the illumination brightness control dial, refer to "Illumination Brightness Control" ☞P153.**

▼ **BSD/RCTA approach warning buzzer (only when reversing)**

A warning buzzer sounds along with flashing of the BSD/RCTA approach indicator light to warn the driver of dangers.

The setting of the warning buzzer volume can be changed by operating the center information display. For details, refer to "Car settings" ☞P201 (11.6-inch display models) or "Vehicle setting icons" ☞P219 (dual 7.0-inch display models).

▼ **Safety tips regarding the BSD/RCTA approach indicator light/warning buzzer**

- In the following cases, operation of the BSD/RCTA approach indicator light and the warning buzzer may be delayed or the system may fail to issue these warnings.
  - When a vehicle moves to the neighboring lane from a lane next to the neighboring lane
  - When driving on a steep incline or on repeated sharp uphill and downhill grades
  - When going beyond a pass
  - When both your vehicle and a vehicle driving on a neighboring lane are driving on the far side of each lane.
  - When several narrowly-spaced vehicles are approaching in a row
  - In low radius bends (tight bends or when making turns at an intersection)
  - When there is a difference in height between your lane and the neighboring lane
  - Immediately after the BSD/RCTA is activated by touching "Rear Vehicle Detection (BSD/RCTA)"
  - Immediately after the select lever is shifted to the "R" position
  - When extremely heavy cargo is loaded in the cargo area
- During reversing, operation of the BSD/RCTA approach indicator light and the warning buzzer may be delayed or the system may fail to issue these warnings under the following conditions.
  - When backing out of an angled parking space
  - When a large-sized vehicle is parked next to your vehicle (That vehicle prevents the propagation of radar waves.)
  - When reversing on sloped roads
  - When reversing at a high speed

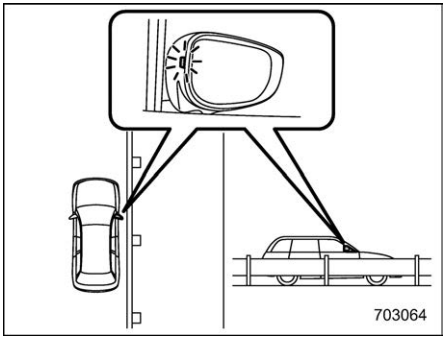

- The BSD/RCTA approach indicator light may illuminate when driving close to solid objects on the road or road side (such as guardrails, tunnels and side-walls).
- When turning at an intersection in urban areas, or a multilane intersection, the BSD/RCTA approach indicator light may flash.
- If a building or a wall exists in the reversing direction, the BSD/RCTA approach indicator light may flash and the warning buzzer may sound.
- In the following cases, the system may detect a vehicle driving two lanes away from your vehicle.
  - When your vehicle drives on the near side of its lane from the corresponding vehicle
  - When the vehicle driving two lanes away drives on the near side of its lane from your vehicle

■ BSD/RCTA OFF Indicator

▼ System temporary stops

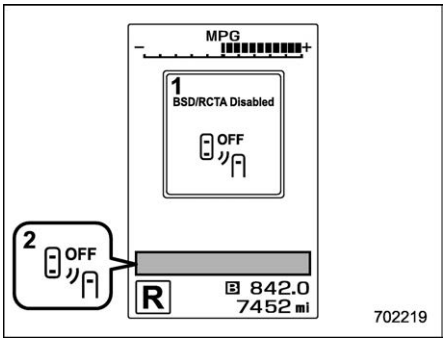

1 BSD/RCTA temporary stop message
2 BSD/RCTA OFF indicator

This display appears when the system is used at extremely high or low temperatures or when abnormal voltage exists. Once these conditions are corrected, the system will recover from the temporary stop condition and the indicator will disappear.

If the indicator remains displayed for a prolonged time, have the system inspected at a SUBARU dealer.

▼ System temporary stops due to reduced radar sensitivity

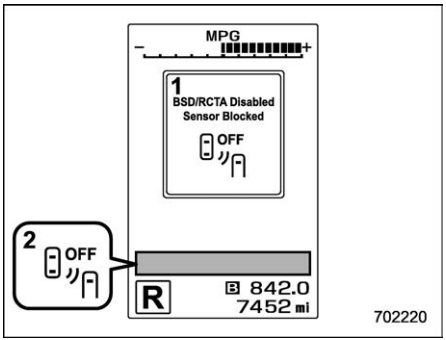

1 BSD/RCTA temporary stop message due to reduced radar sensitivity
2 BSD/RCTA OFF indicator

This display appears when the detectability of the radar sensors is reduced. Once the condition is corrected, the system will recover from the temporary stop condition and the indicator will disappear.

If the indicator remains displayed for a prolonged time, have the system inspected at a SUBARU dealer.

– CONTINUED –

■ BSD/RCTA Warning Indicator

▼ System malfunction

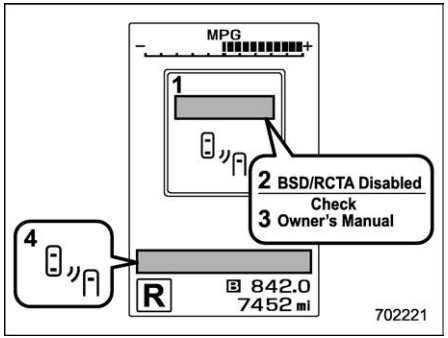

1 BSD/RCTA malfunction message
2 At first, this message will appear
3 Then this message will appear
4 BSD/RCTA warning indicator

This display appears when a malfunction occurs in the system. Contact a SUBARU dealer and have the system inspected.

■ To Turn On/Off the BSD/RCTA

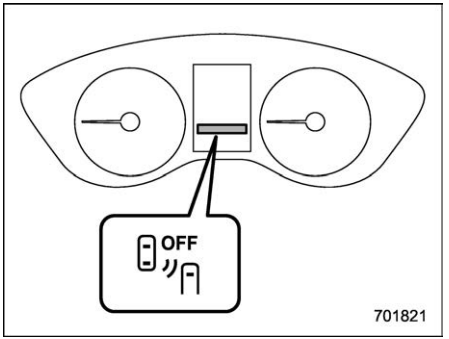

BSD/RCTA OFF indicator

To turn the BSD/RCTA system on and off, operate the center information display. Refer to “Car settings” ☞P201.

When the BSD/RCTA system is turned OFF, the BSD/RCTA OFF indicator on the combination meter display (color LCD) will illuminate.

NOTE

- **In the following cases, turn off the BSD/RCTA system. The system may not operate properly due to blocked radar waves.**
  - **When towing a load**
  - **When a bicycle carrier or other item is fitted to the rear of the vehicle**
  - **When using a chassis dynamometer or free roller device, etc.**
  - **When running the engine and making the wheels rotate while lifting up the vehicle**
- **If the ignition switch is turned to the “LOCK”/“OFF” position, the last known status of the system is maintained. For example, if the ignition switch is turned to the “LOCK”/“OFF” position with the BSD/RCTA deactivated, the BSD/RCTA remains deactivated the next time the ignition switch is turned to the “ON” position.**

Certification for the BSD/ RCTA

- **The U.S. and other FCC compliant countries**

FCC ID: OAYSRR3A

CAUTION

FCC WARNING

Changes or modifications not expressly approved by the party responsible for compliance could void the user's authority to operate the equipment.

This device complies with part 15 of the FCC Rules. Operation is subject to the following two conditions: (1) This device may not cause harmful interference, and (2) this device must accept any interference received, including interference that may cause undesired operation.

- **Canada-spec. models**

This device contains licence-exempt transmitter(s)/receiver(s) that comply with Innovation, Science and Economic Development Canada's licence-exempt RSS(s). Operation is subject to the following two conditions:

1. This device may not cause interference.
2. This device must accept any interference, including interference that may cause undesired operation of the device.

Radiofrequency radiation exposure information:

This equipment complies with radiation exposure limits set forth for an uncontrolled environment. This equipment should be installed and operated with minimum distance of 20 cm between the radiator and your body.

D01028

L'émetteur/récepteur exempt de licence contenu dans le présent appareil est conforme aux CNR d'Innovation, Sciences et Développement économique Canada applicables aux appareils radio exempts de licence. L'exploitation est autorisée aux deux conditions suivantes:

1. L'appareil ne doit pas produire de brouillage;
2. L'appareil doit accepter tout brouillage radioélectrique subi, même si le brouillage est susceptible d'en compromettre le fonctionnement.

Informations sur l'exposition aux rayonnements radiofréquences:

Cet équipement est conforme aux limites d'exposition aux rayonnements définies pour un environnement non contrôlé. Cet équipement doit être installé et utilisé avec un minimum de 20 cm de distance entre la source de rayonnement et votre corps.

D01029

– CONTINUED –

■ Handling of Radar Sensors

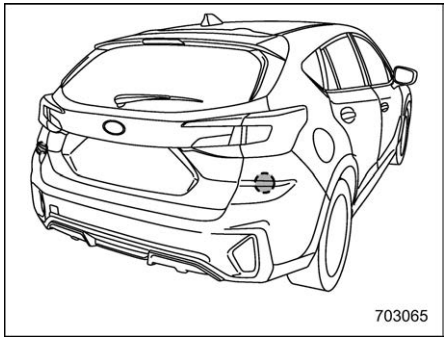

Radar sensors

The radar sensors, one on each side of the vehicle, are mounted inside the rear bumper.

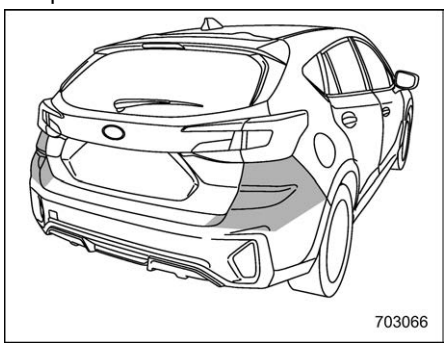

CAUTION

To ensure correct operation of the BSD/RCTA, observe the following precautions.

- **Always keep the bumper surface near the radar sensors clean.**
- **Do not affix any stickers or other items on the bumper surface near the radar sensors. For details, consult your SUBARU dealer.**
- **Do not modify the bumper near the radar sensors.**
- **Do not paint the bumper near the radar sensors.**
- **Do not expose the bumper near the radar sensors to strong impacts. If a sensor becomes misaligned, a system malfunction may occur, including the inability to detect vehicles entering the detection areas. If any strong shock is applied to the bumper, be sure to contact your SUBARU dealer for inspection.**
- **Do not disassemble the radar sensors.**

NOTE

If the radar sensors require repair or replacement, or the bumper area around the radar sensors requires repair, paintwork or replacement, contact your SUBARU dealer for assistance.

7-20. Reverse Automatic Braking (RAB) System (If Equipped)

Reverse Automatic Braking (RAB) is a system designed to help avoid collisions or reduce collision damage when reversing the vehicle. If a wall or an obstacle is detected in the reversing direction, the system will notify the driver with a warning sound and may activate the vehicle's brakes automatically.

WARNING

- **Reverse Automatic Braking (RAB) is not a system intended to replace the driver's responsibility to check their surroundings for vehicles or obstacles to avoid a collision.**
- **The driver is responsible for driving safely. Before reversing, be sure to first depress the brake pedal and visually check the surroundings.**
- **There are some cases in which the vehicle cannot avoid collision, because the system operation has limitations. The warning sound or automatic braking may be delayed or may not operate at all even when an obstacle is present.**
- **Make sure to set the Automatic Braking function to OFF when the vehicle is on the free roller or on the chassis dynamometer. Otherwise, the vehicle may move and it may cause an accident.**
- **The system is not designed to detect people (including children), animals or other moving objects.**
- **Depending on the vehicle condition or the surrounding environment, the sonar sensor's ability to detect objects may become unstable.**
- **When an attachment part (trailer hitch, bicycle carrier, bumper guard) is installed on the rear of the vehicle, turn off the Reverse Automatic Braking (RAB). If this function is on when an attachment or a similar part is installed, it may result in a system malfunction that causes an accident resulting in serious damage, injury or death.**

NOTE

The Reverse Automatic Braking (RAB) system records and stores the following data when automatic braking operates. It does not record conversations, personal information or other audio data.

- **Distance from the object**
- **Vehicle speed**
- **Accelerator pedal operation status**
- **Brake pedal operation status**
- **Select lever position**
- **Outside temperature**
- **The sensitivity setting of the sonar sensors**

SUBARU and third parties contracted by SUBARU may acquire and use the recorded data for the purpose of vehicle research and development. SUBARU and third parties contracted by SUBARU will not disclose or provide the acquired data to any other third party except under the following conditions.

- **The vehicle owner has given his/her consent.**
- **The disclosure/provision is based on a court order or other legally enforceable request.**
- **Data that has been modified so that the user and vehicle cannot be**

– CONTINUED –

identified is provided to a research institution for statistical processing or similar purposes.

■ Reverse Automatic Braking (RAB) System Overview

The Reverse Automatic Braking (RAB) system will operate the following 2 functions using 4 sonar sensors.

- **Sonar Audible Alarm function**

The Reverse Automatic Braking (RAB) system detects objects rearward and warns the driver by warning message on the center information display and warning beeps.

- **Automatic Braking function**

The Automatic Braking function detects objects rearward and if there is a high risk of a collision, the system decelerates the vehicle and controls the braking to reduce damage.

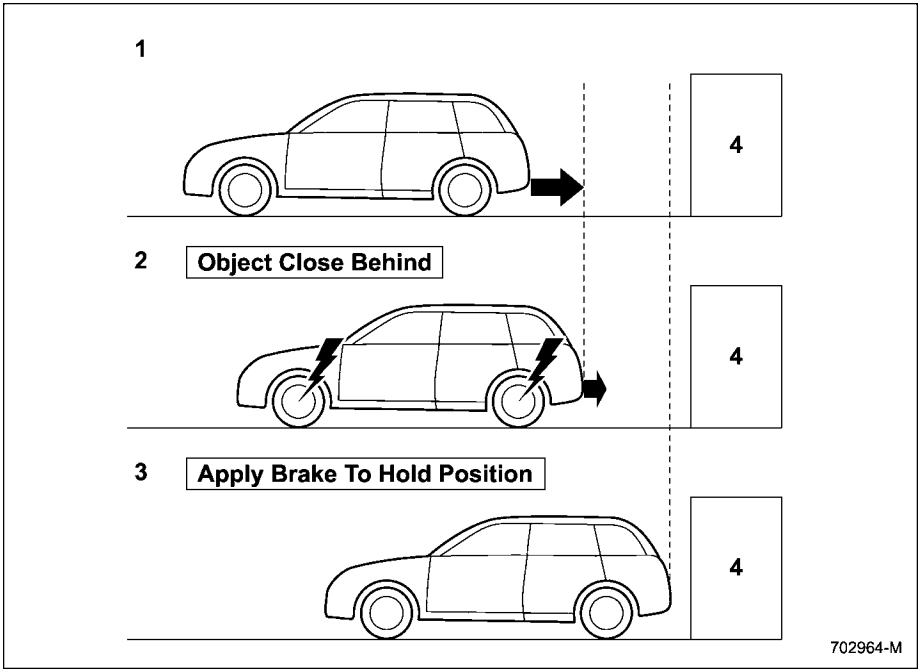

1 When reversing
2 When either strong automatic braking or torque control is applied to prevent collision (in this case, short warning beeps or continuous warning beeps will sound)
3 When the vehicle is stopped by the system (in this case, the continuous beep will remain sounding)
4 Object (e.g., a wall)

▼ **Detecting range**

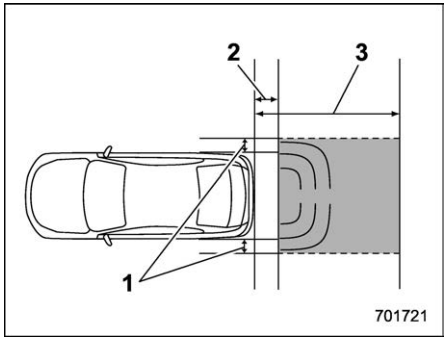

1 Detecting range (width): Approximately 6 in (15 cm) outside of the vehicle width
2 Range that the system cannot detect: Approximately 20 in (50 cm) behind the rear of the vehicle
3 Detecting range (length): Approximately 5 ft (1.5 m) from the rear of the vehicle

WARNING

If your vehicle is trapped on a railroad crossing and you are trying to escape by reversing through the crossing gate, the system may recognize the crossing gate as an obstacle and brake may activate. In this case, remain calm and either continue to depress the accelerator pedal or cancel the system. To cancel the system, refer to "Canceling the Reverse Automatic Braking (RAB) System Operation" ☞P376.

■ Operating Conditions

The Reverse Automatic Braking (RAB) system will operate when all of the following conditions are met.

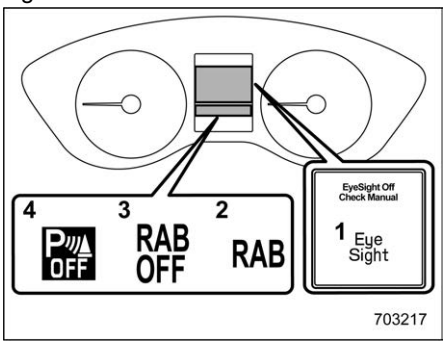

1 EyeSight warning indicator
2 RAB warning indicator
3 RAB OFF indicator
4 Sonar Audible Alarm OFF indicator

- The ignition switch is in the "ON" position.
- The EyeSight warning indicator is off.
- The RAB warning indicator is off.
- The RAB OFF indicator is off.
- The select lever is in the "R" position.
- Sonar Audible Alarm OFF indicator is off.

Sonar Audible Alarm function

- Sonar Audible Alarm is set to "ON".
- The vehicle speed is from 0 to 9 mph (0 to 15 km/h).

Automatic Braking function

- Automatic Braking is set to "ON".
- The vehicle speed is from 1 to 9 mph (1.5 to 15 km/h).

NOTE

- **In the following cases, the Reverse Automatic Braking (RAB) system will not operate. Promptly contact a SUBARU dealer to have the system inspected.**
  - **The EyeSight warning indicator is illuminated.**
  - **The RAB warning indicator is illuminated.**
- **In the following cases, the Reverse Automatic Braking (RAB) system cannot be operated.**
  - **The (EyeSight Temporary Stop indicator: White) is illuminated, and the messages corresponding to the EyeSight temporary stop are displayed on the combi-**

– CONTINUED –

nation meter display (color LCD). For details, refer to the Owner's Manual supplement for the EyeSight system.
  - The RAB OFF indicator is illuminated.
- In the following cases, the functions may not be able to properly work. Promptly contact a SUBARU dealer to have the system inspected.
  - A sticker, paint, or a chemical is applied to the sonar sensors or the rear bumper.
  - The rear bumper is modified.
  - The rear bumper has been removed and attached.
  - The ground clearance is changed due to the vehicle's loading condition or modification.
  - There is damage to the sonar sensors or the rear bumper.
  - The rear bumper is exposed to strong impact, or the rear bumper is deformed.
- On a steep hill, the system's automatic braking ability will be reduced.
- The system is designed to avoid collisions by automatic hard braking when the vehicle's reversing speed is less than approximately 3 mph (5 km/h). However, the system does not guarantee that the vehicle will be able to avoid collisions in any situation.
- If the vehicle is reversed at an extremely slow speed, the driver's operation may be prioritized. In this case, automatic braking will not operate.
- In the following situations, the system may not be able to detect an object correctly:
  - When the vehicle is approaching diagonally to an object
  - When the steering wheel is turned greatly
- The system may not be able to detect and apply the brake with the following objects.
  - Sharp or thin objects such as poles, fences and ropes which may not reflect the sound wave emitted from the sonar sensor.
  - Objects that are too close to the rear bumper when the select lever is set to the "R" position.
  - Objects with a surface which may not reflect the sound wave emitted from the sonar sensor such as a chain link fence.
- Objects the system is not designed to detect and apply brake.
  - Pedestrians.
  - Moving objects including moving vehicles.
  - Objects which absorbs sound waves such as cloth or snow.
  - Objects whose surface has a diagonal angle.
  - Objects that are low to the ground such as parking blocks.
  - Objects that are high above the ground such as objects hanging from above.
  - Objects that are out of range of the center of the vehicle in the horizontal direction.
  - Objects that are not perpendicular to the ground.
  - The surface of the object is uneven or wavy.
- When reversing the vehicle, the functions may not be able to work properly or may cause a system malfunction if the following conditions exist.

  High frequency sound from other sources are nearby:
  - Horn sound from another vehicle.
  - Engine sound from other vehicles.
  - Sound of an air brake.
  - Vehicle detection equipment or a sonar from another vehicle.

- A sound wave with a frequency similar to the vehicle's system is transmitted near by.
- A vehicle equipped with the same system is reversing toward your reversing direction.

Weather conditions:
- Extremely high or extremely low temperatures in which the area near the sonar sensor becomes too hot or too cold to operate.
- The sonar sensors or the rear bumper near the sonar sensors are exposed to heavy rain or a significant amount of water.
- Fog, snow or sandstorm, etc.
- Air is moving rapidly such as when a strong wind is blowing.

Parts attached to the rear bumper near the sonar sensor:
- Commercial electronic parts (fog light, fender pole, radio antenna) are attached.
- Parts that emit high frequency sound, such as a horn or speaker, are attached.

Vehicle conditions:
- Ice, snow or mud is adhered to the sonar sensors or the rear bumper near the sonar sensor.
- The vehicle is significantly inclined.
- The ground clearance is significantly reduced due to the vehicle's loading condition, etc.
- When the sonar sensor is misaligned due to a collision or an accident.

Surrounding environment:
- A cloth banner, flag, hanging branch or railroad crossing bars are present in the reversing direction.
- When reversing on a gravel or grassy area.
- When reversing in an area where objects or walls are adjacent to the vehicle such as narrow tunnels, narrow bridges, narrow roads or narrow garages.
- Wheel track or hole is present in the ground of the reversing direction.
- When reversing over a drainage cover (grating cover).

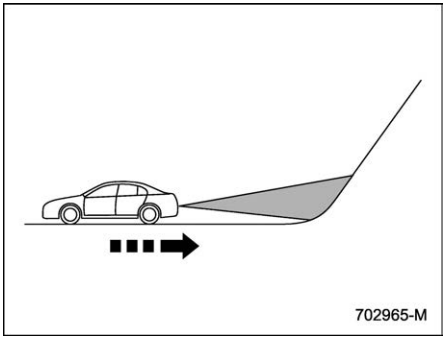

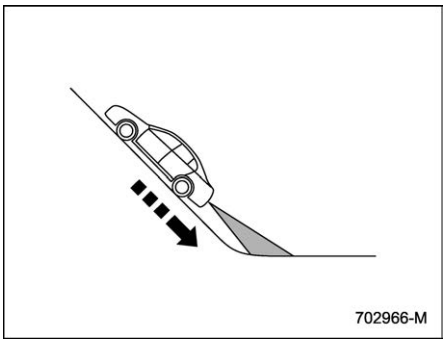

- The path of the reversing direction is inclined such as on a steep uphill.
- When reversing downhill.

– CONTINUED –

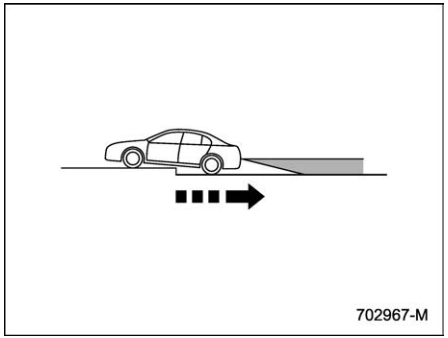

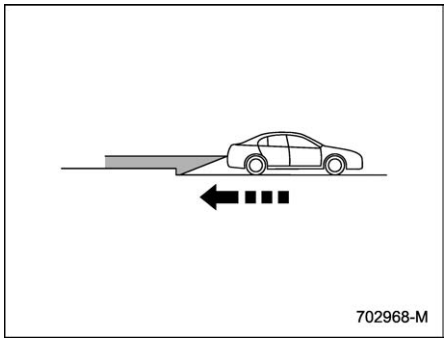

- **A curb or step is present in the reversing direction.**
- **Reversing in a garage with a low ceiling or a tunnel.**
- **There is a patch of snow rearward.**
- **There is a puddle of water.**
- **There is an obstacle that is next to an object.**
- **Going back along a wall.**
- **The area where the road starts touching dirt and snow**
- **When reversing on an uneven road.**

- **In circumstances such as the following, it may not be possible to avoid a collision even when the system operates normally.**
  - **Roads are slippery.**
  - **The tire air pressure is not correct.**
  - **The tires have become worn.**
  - **Tire chains are installed.**
  - **Tires which are not the designated size are installed.**
  - **Emergency repairs were performed using a puncture repair kit.**
  - **The suspension was modified.**
  - **Vehicle driving is unstable due to accident or malfunction.**
  - **The brake warning light is illuminated.**

■ Sonar Audible Alarm Function

When the Reverse Automatic Braking (RAB) system is in operation, audible warning beeps will sound to warn the driver of a potential collision in 3 levels: medium proximity, short proximity, closest proximity.

NOTE

It may take time to display the wall and sound warning beeps after the object was recognized by the Sonar Audible Alarm function.

Guideline of detecting range

Alert level	Range of detected object*	Distance indicator	Alarm pattern
Long proximity alert (object detected)	43 to 59 in (110 to 150 cm)	Green	No warning sound
Medium proximity alert (approaching the object)	28 to 43 in (70 to 110 cm)	Yellow	Short beeps
Short proximity alert (approaching closer to the object)	20 to 28 in (50 to 70 cm)	Orange	Rapid short beeps
Closest proximity alert (too close to the object)	20 in (50 cm) or less	Red	Continuous beep

*: Range of detection may vary depending on the environmental condition.

▼ Obstacle detected and alert level

When an object is detected in the reversing direction, the range of detected object will be shown on the center information display and combination meter display (color LCD).

A warning alarm will sound and, depending on the speed, either torque control to generate engine braking or automatic braking will be applied.

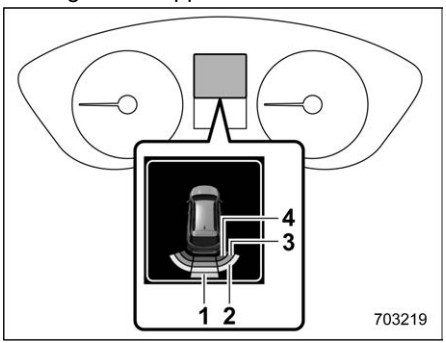

Combination meter display (color LCD)

1 Long proximity alert (green)
2 Medium proximity alert (yellow)
3 Short proximity alert (orange)
4 Closest proximity alert (red)

The alert levels are indicated on the center information display as shown in the following.

– CONTINUED –

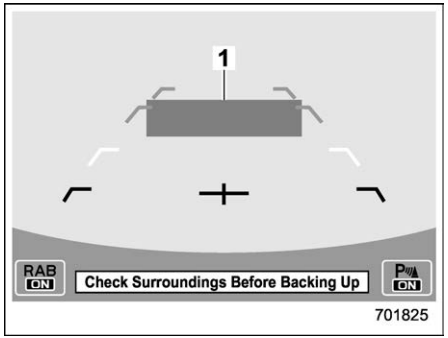

Long proximity alert (object detected)
1 Green: 43 to 59 in (110 to 150 cm)

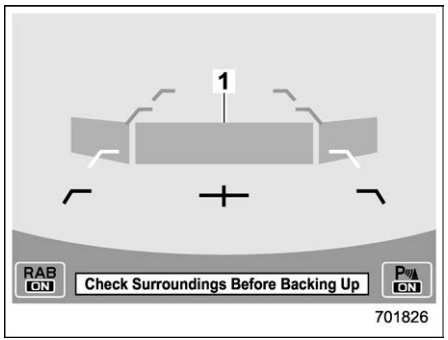

Medium proximity alert (approaching the object)
1 Yellow: 28 to 43 in (70 to 110 cm)

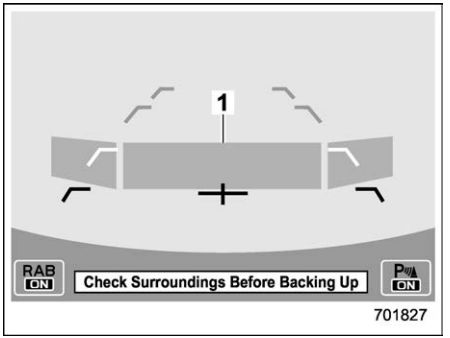

Short proximity alert (approaching the object closer)
1 Orange: 20 to 28 in (50 to 70 cm)

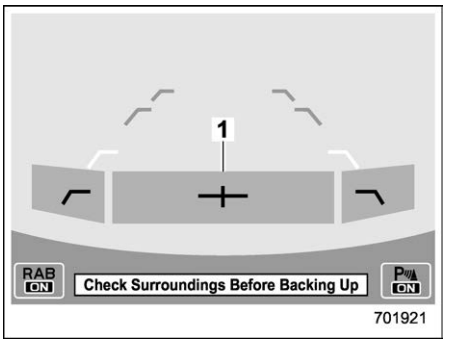

Closest proximity alert (too close to the object)
1 Red: 20 in (50 cm) or less

■ Automatic Braking Function Operation

▼ Object close behind warning

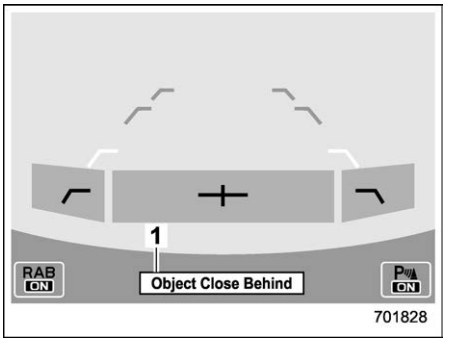

Automatic braking warning
1 Warning message

If the system determine the risk of collision with the object. Short warning beeps or continuous warning beeps will sound and either strong automatic braking or torque control will be applied to prevent collision.

At this time, a warning message is also displayed on the combination meter display (color LCD).

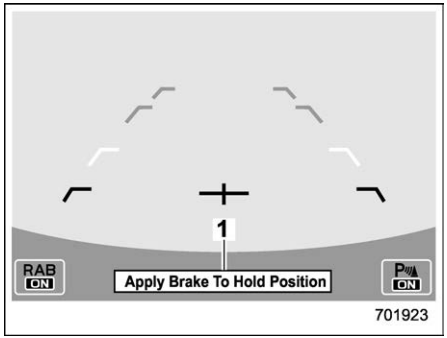

Depress brake pedal warning
1 Warning message

Make sure to depress the brake pedal once the vehicle has been stopped by automatic braking. Until the brake pedal is depressed, a message will be displayed on the center information display and the continuous beep will remain sounding.

At this time, a warning message is also displayed on the combination meter display (color LCD).

NOTE

The Sonar Audible Alarm function and Automatic Braking function are different in operation conditions. Therefore, there are cases in which only one of these functions will activate.

WARNING

Depress the brake pedal immediately after the system stops the vehicle by automatic braking. Depending on the conditions of the road surface and tires, the vehicle may not remain stopped, possibly leading to an accident.

▼ **After the vehicle is stopped by the system**

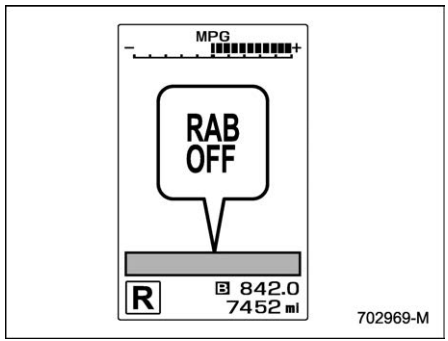

After the brake pedal is depressed, the RAB OFF indicator will illuminate and the system will temporarily stop operating. The RAB OFF indicator will turn off when the select lever is shifted to a position other than the “R” position.

The system will operate again the next time the select lever is shifted to the “R” position.

NOTE

- **In the following cases, after the vehicle has been stopped by the Reverse Automatic Braking (RAB) system, brake control is released and the electronic parking brake operates. For details about releasing the parking brake, refer to “Electronic Parking Brake” ☞P340.**
  - **When 2 minutes pass after the vehicle is stopped**
  - **When any door is opened**
- **The Reverse Automatic Braking (RAB) system may stop operating temporarily in the following cases and the RAB OFF indicator will illuminate.**
  - **Ice, snow or mud is adhered to the sonar sensors or the rear bumper near the sonar sensor.**
  - **Objects are too close to the rear bumper when the select lever is set to the “R” position.**
  - **The system detects sounds of a similar frequency to the RAB sonar.**
  - **The Vehicle Dynamics Control OFF mode is selected.**

– CONTINUED –

■ Canceling the Reverse Automatic Braking (RAB) System Operation

The Reverse Automatic Braking (RAB) system can be temporarily canceled by any of the following operations.

- While the vehicle is stopped by the operation of automatic braking, the brake pedal is depressed.
- While the vehicle is stopped by the operation of automatic braking, the accelerator pedal is depressed.
- The accelerator pedal is depressed continuously (In this case, limited acceleration will be canceled and the vehicle will continue reversing.)
- The select lever is shifted to a position other than the “R” position.

NOTE

The system will be canceled if the object is no longer detected.

■ Reverse Automatic Braking (RAB) System ON/OFF Setting

While the select lever is shifted to the “R” position, the below functions of the Reverse Automatic Braking (RAB) system can be set by operating the center information display.

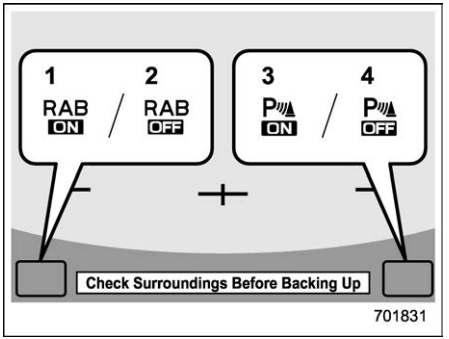

1 ON setting key of Automatic Braking function
2 OFF setting key of Automatic Braking function
3 ON setting key of the Sonar Audible Alarm function
4 OFF setting key of the Sonar Audible Alarm function

When the ON setting key is shown, the corresponding setting is ON.

Touch the ON setting key to turn the setting OFF.

When the OFF setting is shown, the corresponding setting is OFF.

Touch the OFF setting key to turn the setting ON.

When the Automatic Braking function or the Sonar Audible Alarm function is turned OFF, the following indicator(s) will illuminate.

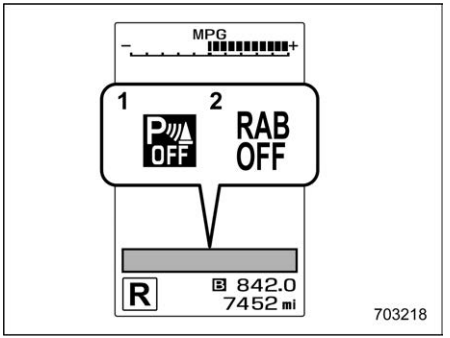

1 Sonar Audible Alarm OFF indicator
2 RAB OFF indicator

The RAB OFF indicator or the Sonar Audible Alarm OFF indicator will turn off when the corresponding function is turned ON.

NOTE

- **When the settings cannot be changed, the ON/OFF setting key will be grayed out.**
- **As soon as you turn off the ignition switch, the Reverse Automatic Braking (RAB) ON/OFF setting is stored in the system. Therefore, when you turn the ignition switch from the “OFF” state to the “ON” position,**

the Reverse Automatic Braking (RAB) setting will revert to the state that was set before the ignition switch was turned off.

- **When you turn the ignition switch off, the Sonar Audible Alarm ON/OFF settings will always reset, and the system will not store the settings of the function. Therefore, every time you turn the ignition switch to the "ON" position, the Sonar Audible Alarm will turn on automatically.**

Also, the following settings can be changed by operating the center information display.

- Warning volume
- Sonar Audible Alarm

For details, refer to "Car settings" ☞P201.

■ RAB Warning Indicator

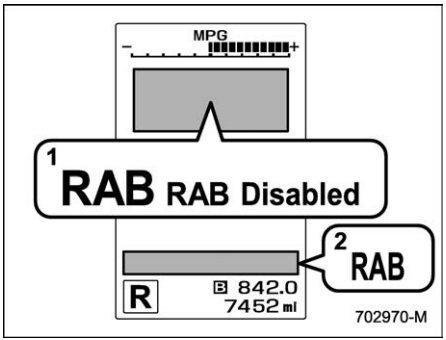

1 RAB malfunction message
2 RAB warning indicator

If the Reverse Automatic Braking (RAB) system malfunctions, the above indicator illuminates on the combination meter. Contact the nearest SUBARU dealer for details.

■ Handling of the Sonar Sensors

The 4 sonar sensors are located in the rear bumper. To ensure the proper operation of the Reverse Automatic Braking (RAB) system, observe the following precautions.

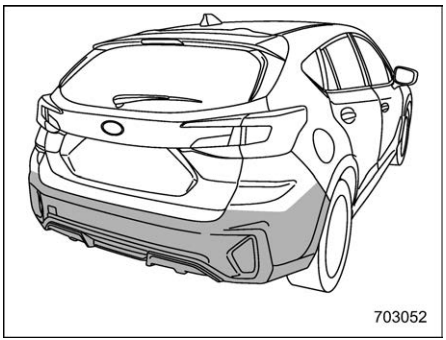

- Do not affix any stickers or other items on the sonar sensor or the rear bumper surface.
- Always keep the sonar sensor and the rear bumper surface clean.
- Do not modify rear bumper.
- Do not paint the rear bumper.
- Do not apply high pressure water to the sonar sensors with a high pressure car-washing machine.

– CONTINUED –

- Do not apply strong impacts to the rear bumper. If a sensor becomes misaligned, a system malfunction may occur, including inability to detect objects in the reversing direction. If any strong impact is applied to the rear bumper, contact a SUBARU dealer to have the system inspected.
- Do not disassemble the sonar sensors.

NOTE

If the sonar sensors require repair or replacement, or if the area of the rear bumper near the sonar sensors requires repair, paintwork or replacement, contact your SUBARU dealer for assistance.

7-21. Driver Monitoring System (If Equipped)

Driver Monitoring System is introduced as DriverFocus in some countries.

The Driver Monitoring System monitors possible cases when the driver is not paying attention to the forward direction, and also recognizes individual users.

This system warns the driver of inattentive/drowsy driving, and can support safe and comfortable driving by automatically retrieving the following settings.

– Climate control setting
– Meter setting
– Center information display setting

When a user is registered, various settings are automatically retrieved when the user enters the vehicle.

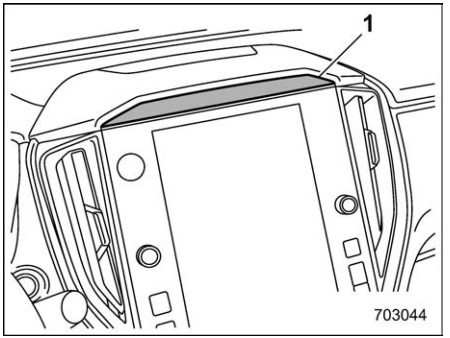

1 Camera

CAUTION

- **Always use the utmost care in driving**
  - **Overconfidence because you are driving a vehicle with the Driver Monitoring System could easily lead to a serious accident.**
- **This system cannot detect if the driver is feeling drowsy or is concentrating on safe driving.**
- **It cannot judge if the driver is awake or asleep, if their driving abilities have diminished, or if they are concentrating on safe**

driving.

- In some circumstances, the system may not be able to correctly detect the driver state.

NOTE

- The user recognition camera does not save images, audio, or video.
- The Driver Monitoring System may not operate correctly when sunlight is shining into the vehicle in the following ways.
  - Sunlight is shining directly (or through glass) onto the user recognition camera.
  - There are shadows on the driver's face caused by sunlight (or any light with a strong infrared component).
  - There are large momentary fluctuations in the strength of the sunlight (or any light with a strong infrared component) shining on the face.
- Correct detection may not be possible when a device that includes an infrared light source (such as a commercially available Driver Monitoring System) is installed in the vehicle interior.
- The Driver Monitoring System may not operate correctly at the following times when the driver is wearing glasses or sunglasses.
  - The sunglasses do not allow the easy passage of infrared light.
  - The surrounding scenery is reflected strongly in the lenses of the glasses or sunglasses.
  - The eyes are hidden by the frame of the glasses and the user recognition camera cannot detect the eyes.
  - The light from an infrared light source (LED) is reflected in the lenses of the glasses or sunglasses.
  - The driver is wearing an eyepatch.
  - The driver is wearing a hat set deeply over the eyes.
- Depending on the type of mask, correct detection of inattentive/drowsy driving may not be possible.
- Correct user recognition is not possible if the eyes, nose, or mouth is covered with a mask, muffler, sunglasses, or other item.
- The Driver Monitoring System may not operate correctly when the eyebrows, eyes, nose, or mouth is hidden due to item that is between the face and the system.
- If a thick cover is attached to the steering wheel, then depending on the position set for the tilt/telescopic steering wheel, the cover may block the system's view of the face, and the system and the Driver Monitoring System may not operate correctly.
- Do not attach any stickers to the user recognition camera or the infrared light source (LED). If the user recognition camera or infrared light source (LED) is covered by an obstruction, it will not be possible to correctly monitor the driver.
- If an accessory is hung from the inside mirror, correct detection may not be possible.
- Do not touch the user recognition camera or the infrared light source (LED) directly with your fingers. If there is dirt or a fingerprint on these parts, it will not be possible to correctly monitor the driver. If there is dirt or a fingerprint on these parts, either wipe them with a soft dry cloth, or wipe gently with a damp cloth after first firmly wringing the water out.
- If the surface of the user recognition camera or the infrared light source (LED) becomes scratched, correct detection may not be possible. Be

– CONTINUED –

careful that hard objects do not contact these parts.

- If there is condensation on the user recognition camera or the infrared light source (LED), correct detection may not be possible. If there is condensation on these parts, wipe it away with a soft dry cloth.
- When registering a user for user recognition, avoid closing your eyes as much as possible.
- If the user recognition success rate is low, it is possible that the user is not correctly registered. Delete the registered data and perform registration again.
- If a user frequently drives both with glasses and contact lenses, it is recommended that registration be performed both when wearing glasses and when wearing contact lenses.
- User recognition starts immediately after entering the vehicle, however if the user looks downward or at the driver side mirror for a long time, the user may not be recognized.
- When one person among twins or another pair of persons with similar facial features is registered, the other person may be incorrectly recognized as the registered user when entering the vehicle.
- If the person in the passenger's seat leans into the driver's seat, or in other cases when there are two or more faces near the driver's seat, the system may not operate correctly.
- There are cases when the system concludes that the user's eyes are closed when the user is looking downward during driving, such as when checking instruments or the navigation screen. In such cases, the drowsy driving warning buzzer may sound or the system may otherwise not operate correctly.
- If the eyes are narrowed when laughing or when there is a dazzling outside light, the system may judge that the eyes are closed and the drowsy driving warning buzzer may sound or the system may otherwise not operate correctly.
- The drowsy driving or asleep warning states are recognized from the length of time and percentage of time that the eyes are closed. The drowsy driving warning buzzer will not sound simply when the driver feels sleepy or yawns.
- Even when the driver does not feel sleepy, if his or her eyes are closed or if he or she blinks frequently, the drowsy driving warning buzzer may sound.
- The inattentive driving warning buzzer may sound if the driver leans forward or puts his or her head out of the window while driving.
- The inattentive driving warning buzzer will not sound when the vehicle is stopped or traveling at slow speed even if the driver is not looking ahead.
- The Driver Monitoring System collects and stores data regarding drivers' facial features. Facial recognition data is stored locally and does not leave the vehicle. It is not transmitted to or stored by SUBARU or anyone else. The Driver Monitoring System may be disabled and any stored driver data may be deleted by following the instructions below. If the Driver Monitoring System is disabled, it will be unable to provide any of its safety or convenience functions.

The functions which are available vary depending on the Driver Monitoring System setting and the user recognition function setting.

Available functions

			Driver Monitoring System*1	
			ON	OFF
User recognition function*2	ON	Inattentive/drowsy driving warning	Available	Not available
		User recognition function	Available	Not available
	OFF	Inattentive/drowsy driving warning	Available	Not available
		User recognition function	Not available	Not available

– CONTINUED –

Available function items

			Driver Monitoring System*1	
			ON	OFF
User recognition function*2	ON	Register User	Available	Not available
		Delete User	Available	Not available
		Delete All Users	Available	Not available
	OFF	Register User	Not available	Not available
		Delete User	Available	Not available
		Delete All Users	Available	Not available

*1: The system can be turned ON/OFF with the center information display. Refer to “Car settings” ☞P201.
*2: The function can be turned ON/OFF in the center information display customization settings. Refer to “Car settings” ☞P201.

The functions which are available vary depending on whether or not the user is registered.

Available functions

	The user is registered.	The user is not registered.
User recognition function	Available	Not available

■ User Recognition Function

When a user is registered, it is possible to retrieve the following settings.

▼ Meter personalization

- Combination meter display (color LCD) basic screen

Displays the screen which the user had selected at the time when he/she last exited the vehicle.

▼ Center information display personalization

- Center information display basic screen

Displays the screen which the user had selected at the time when he/she last exited the vehicle.

- Fuel consumption screen

Displays the average fuel economy for past driving by that user.

▼ Climate control personalization

- Climate control settings

Retrieves the preferred setting temperature, airflow mode selection, and other settings which the user had selected at the time when he/she last exited the vehicle.

NOTE

When a recognized user exits the vehicle while the MAX A/C mode is on

and the push engine switch is turned off, the system stores the setting configured before MAX A/C mode was turned on.

▼ Changing the personalization settings

Item		
Meter personalization*	Combination meter display (color LCD) basic screen	When the customization screen linked with the synchronized user function is selected and the setting is changed, it is automatically stored.
Driver Monitoring System ON/OFF status		

*: When the Driver Monitoring System is OFF, the Driver Monitoring System continues to store the conditions from immediately before the Driver Monitoring System was turned OFF even if the screen was selected and the setting was changed.

– CONTINUED –

■ Inattentive/Drowsy Driving Warning

While driving, the Driver Monitoring System monitors possible cases of driver inattention or drowsiness and warns the driver.

When the inattentive/drowsy driving warning activates, the buzzer sounds and an interrupt display appears.

NOTE

- **The inattentive/drowsy driving warning operates regardless of the status of the user recognition function.**
- **The inattentive driving warning does not activate when the turn signal is operating or when the select lever is in the "R" position.**
- **When the pre-collision brake system OFF indicator is illuminated on the combination meter display (color LCD), the inattentive driving warning activates at the same timing as usual even when a vehicle ahead or obstacle is detected. For details about the EyeSight system, refer to the Owner's Manual supplement for the EyeSight system.**

▼ **Inattentive driving warning**

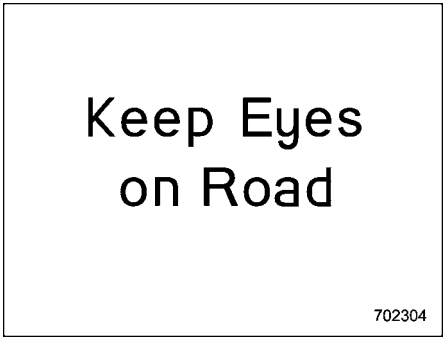

When the system monitors that the driver may be inattentive, it warns the driver.

When the inattentive driving warning activates, the buzzer sounds and an interrupt display appears on the combination meter display (color LCD).

When the EyeSight system has detected a vehicle ahead or obstacle in the forward direction, the inattentive driving warning may activate at earlier timing than usual.

Refer to the Owner's Manual supplement for the EyeSight system.

▼ Drowsy driving warning

Possible drowsiness is detected from the amount of driver eyelid closure, and a warning is given to the driver. When the drowsy driving warning activates, the buzzer sounds and an interrupt display appears.

	Combination meter display (color LCD)	Center information display	Warning chime
Drowsy driving	Stay Alert!	Stay Alert!	Beep, beep... (Continues until the driver's eyes open.)
Very drowsy			Beep, beep, beep, beep, beep (5 times)
Slightly drowsy	Take a Break!	—	Beep
Not drowsy	—	—	—

■ Driver Monitoring System Indicator/Warning

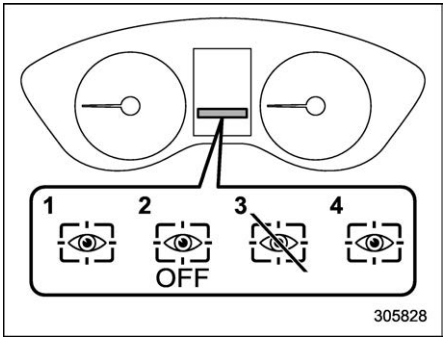

1 Driver Monitoring System operation indicator light (green)
2 Driver Monitoring System OFF indicator light
3 Driver Monitoring System temporary stop indicator light
4 Driver Monitoring System warning light (yellow)

The Driver Monitoring System indicator/warning indicates the status of the Driver Monitoring System on the combination meter display (color LCD).

NOTE

When the Driver Monitoring System OFF indicator, Driver Monitoring System temporary stop indicator, or Driver Monitoring System warning is illumi-

– CONTINUED –

nated, the Driver Monitoring System function cannot be used. In addition, the following items cannot be selected.

- **Register User**
- **Delete User**
- **Delete All Users**

▼ **Driver Monitoring System operation indicator light (green)**

This indicator illuminates when the Driver Monitoring System is operating.

▼ **Driver Monitoring System OFF indicator light**

This indicator illuminates when the user has turned off the Driver Monitoring System and the Driver Monitoring System is not operating.

▼ **Driver Monitoring System temporary stop indicator light**

This indicator illuminates when the Driver Monitoring System is temporarily stopped.

NOTE

The Driver Monitoring System stops temporarily in the following circumstances.

- **When the temperature of the main unit of the Driver Monitoring System is high or low.**
- **When the Driver Monitoring System cannot monitor the driver's eye movement.**
- **When the Driver Monitoring System cannot monitor the driver's eyebrows, eyes, nose or mouth.**
- **When the camera and the infrared light source (LED) are covered and the Driver Monitoring System cannot monitor the driver correctly.**

▼ **Driver Monitoring System warning light (yellow)**

This warning illuminates when there is a problem with the Driver Monitoring System. Contact a SUBARU dealer to have the system inspected.

■ Using the Driver Monitoring System

▼ **User recognition**

When a user is registered with the user recognition function, the Driver Monitoring System performs the following.

702400

1. When the door is opened and the push-button ignition switch is OFF, the user recognition screen appears and the Driver Monitoring system starts user recognition.
   The user recognition screen may not appear when the door is opened in some cases, such as when only a short time has passed after the push-button ignition switch was turned OFF. In such cases, user recognition starts when the door is closed however the user recognition screen does not appear.

2. Sit in the driver's seat and face forward for a few moments.
3. When user recognition is completed, the Hello screen appears on the combination meter display (color LCD).

At this time, climate control settings, combination meter display (color LCD) basic screen, center information display basic screen, and customization settings all change based on the user information.

NOTE

- **When a center information display operation switch is pressed, the user recognition screen is canceled, however user recognition continues.**
- **If user recognition fails, perform recognition again following the instructions, refer to "When a user is not recognized" ☞P387.**
- **User recognition is not performed while driving.**

▼ When a user is not recognized

In the following case, user recognition may not be possible and "User recognition stopped." may be displayed.

- There is an object blocking the camera.

Remove the obstacle and follow the reference procedure to perform user recognition again.

Refer to "Driver Monitoring System" ☞P207.

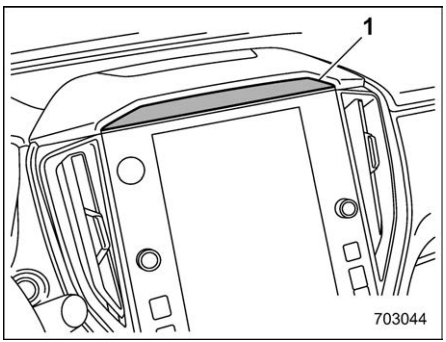

1 Camera

NOTE

- **User recognition may not be possible when there is dirt or fingerprints on the user recognition camera. To clean, either wipe using a soft cloth or else wipe gently using a moistened cloth that has been thoroughly wrung out.**
- **When the synchronized user function is turned OFF, manual repeat facial scan is not possible.**

■ Registering and Deleting a User

Users can be registered in the Driver Monitoring System, and registered users can be deleted. For the user registration and delete procedures, refer to "Driver Monitoring System" ☞P207.

NOTE

- **When the Driver Monitoring System OFF indicator, Driver Monitoring System temporary stop indicator, or Driver Monitoring System warning is illuminated, the following items cannot be selected.**
  - **Register User**
  - **Delete User**
  - **Delete All Users**
- **User information can also be deleted by resetting the center information**

– CONTINUED –

display to the factory default settings. When the settings are reset to the factory default settings, all user information is deleted. The settings cannot be reset to the factory default settings when the Driver Monitoring System is OFF.

■ Driver Monitoring System ON/OFF Settings

NOTE

- **When the Driver Monitoring System is turned OFF after user recognition was completed, the user recognition function stores the Driver Monitoring System ON/OFF state.**
- **Even when the Driver Monitoring System is set to OFF, the Driver Monitoring System automatically turns ON once the driver's door is opened and closed while the vehicle is stopped. This only occurs when the user recognition setting is ON. The system then reverts automatically to the OFF state.**
- **After the Driver Monitoring System was turned OFF, if the Driver Monitoring System is turned ON while the driver's door is open, user recognition may not occur correctly.**

▼ To turn on/off the Driver Monitoring System

To turn the Driver Monitoring System on and off, operate the center information display. Refer to "Car settings" ☞P201. When the Driver Monitoring System is turned OFF, the Driver Monitoring System OFF indicator on the combination meter display (color LCD) will illuminate.

NOTE

Even when the Driver Monitoring System is turned off, the user recognition does not switch on or off automatically.

▼ User recognition settings

The Driver Monitoring System User recognition function can be turned ON/OFF. For the setting procedure, refer to "Car settings" ☞P201.

NOTE

- **The user recognition function setting cannot be changed for each individual user.**
- **The default setting for the user recognition function is ON.**
- **When the user recognition function is turned OFF, the following items cannot be selected.**
  - **Repeat Facial Scan**
  - **Register User**

■ How to Get the Source Code That Uses Open Source Software

Free Open-Source Software Information

This product uses Free Open-Source Software (FOSS).

The license information and/or the source code of such FOSS can be found at the following URL:

http://www.embedded-carmultimedia.jp/RTOS/License/oss/DMS_0101/

8-1. New Vehicle Break-In Driving – the First 1,000 miles (1,600 km) 392
8-2. Fuel Economy Hints 392
8-3. Engine Exhaust Gas (Carbon Monoxide)..... 392
8-4. Catalytic Converter 393
8-5. Periodic Inspections 394
8-6. Driving in Foreign Countries 394
8-7. Frequent Driving Prevents Vehicle Battery from Discharging 394
8-8. Driving Precaution 395
8-9. Driving Tips for AWD Vehicles 395
8-10. Winter Driving 396
Operation during Cold Weather 396
Driving on Snowy and Icy Roads 398
Corrosion Protection 399
Snow Tires 399
Tire Chains 400
Rocking the Vehicle 400
8-11. Loading Your Vehicle 400
Vehicle Capacity Weight 401
GVWR and GAWR (Gross Vehicle Weight Rating and Gross Axle Weight Rating) 402
Roof Molding and Crossbar 402
8-12. Trailer Towing 404

8-1. New Vehicle Break-In Driving – the First 1,000 miles (1,600 km)

The performance and long life of your vehicle are dependent on how you handle and care for your vehicle while it is new. Follow these instructions during the first 1,000 miles (1,600 km):

- Do not race the engine. And do not allow engine speed to exceed 4,000 rpm except in an emergency.
- Do not drive at one constant engine or vehicle speed for a long time, either fast or slow.
- Avoid starting suddenly and rapid acceleration, except in an emergency.
- Avoid hard braking, except in an emergency.

The same break-in procedures should be applied to a newly installed or overhauled engine or when brake pads are replaced with new ones.

8-2. Fuel Economy Hints

The following suggestions will help to save your fuel.

- Select the proper gear position for the speed and road conditions.
- Avoid sudden acceleration or deceleration. Always accelerate gently until you reach the desired speed. Then try to maintain that speed for as long as possible.
- Do not pump the accelerator and avoid racing the engine.
- Avoid unnecessary engine idling.
- Keep the engine properly tuned.
- Keep the tires inflated to the correct pressure shown on the tire inflation pressure label, which is located under the door latch on the driver's side. Low pressure will increase tire wear and fuel consumption.
- Use the air conditioner only when necessary.
- Keep the front and rear wheels in proper alignment.
- Avoid carrying unnecessary luggage or cargo.
- The indication of the ECO gauge shows a reference for saving fuel. For details, refer to "ECO gauge" ☞P180.

8-3. Engine Exhaust Gas (Carbon Monoxide)

WARNING

- **Never inhale engine exhaust gas. Engine exhaust gas contains carbon monoxide, a colorless and odorless gas which is dangerous, or even lethal, if inhaled.**
- **Always properly maintain the engine exhaust system to prevent engine exhaust gas from entering the vehicle.**
- **Never run the engine in a closed space, such as a garage, except for the brief time needed to drive the vehicle in or out of it.**
- **Avoid remaining in a parked vehicle for a long time while the engine is running. If that is unavoidable, then use the ventilation fan to force fresh air into the vehicle.**
- **Always keep the front ventilator inlet grille free from snow, leaves or other obstructions to ensure that the ventilation system always works properly.**

- **If at any time you suspect that exhaust fumes are entering the vehicle, have the problem checked and corrected as soon as possible. If you must drive under these conditions, drive only with all windows fully open.**
- **Keep the rear gate closed while driving to prevent exhaust gas from entering the vehicle.**

NOTE

Due to the expansion and contraction of the metals used in the manufacture of the exhaust system, you may hear a crackling sound coming from the exhaust system for a short time after the engine has been shut off. This sound is normal.

8-4. Catalytic Converter

WARNING

- **Avoid fire hazards. Do not drive or park the vehicle anywhere near flammable materials (e.g. grass, paper, rags or leaves), because the catalytic converter operates at very high temperatures.**
- **Keep everyone and flammable materials away from the exhaust pipe while the engine is running. The exhaust gas is very hot.**

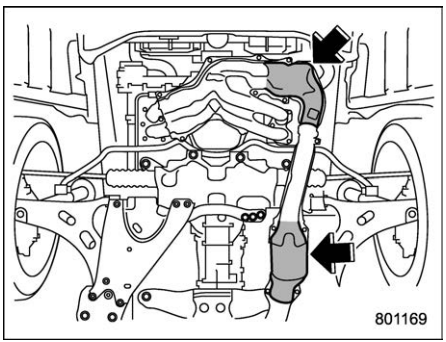

The catalytic converter is installed in the exhaust system. It serves as catalyst to reduce HC, CO and NOx in exhaust gases, thus providing cleaner exhaust.

To avoid damage to the catalytic converter:

- Use only unleaded gasoline. Even a small amount of leaded gasoline will damage the catalytic converter.
- Never start the engine by pushing or pulling the vehicle.
- Avoid racing the engine.
- Never turn off the ignition switch while the vehicle is moving.
- Keep your engine tuned-up. If you feel the engine running rough (misfiring, backfiring or incomplete combustion), have your vehicle checked and repaired by an authorized SUBARU dealer.
- Do not apply undercoating or rust prevention treatment to the heat shield of catalytic converter and the exhaust system.
- Do not drive with an extremely low fuel level.

8-5. Periodic Inspections

To keep your vehicle in the best condition at all times, always have the recommended maintenance services listed in the maintenance schedule in the “Warranty and Maintenance Booklet” performed at the specified time or mileage intervals.

8-6. Driving in Foreign Countries

When planning to use your vehicle in another country:

- Confirm the availability of the correct fuel. Refer to “Fuel Requirements” ☞P305.
- Comply with all regulations and requirements of each country.

8-7. Frequent Driving Prevents Vehicle Battery from Discharging

Vehicle batteries are a consumable item. If the battery charge is not maintained regularly, the battery will deteriorate and may require replacement sooner than expected. The battery is charged by running the engine. It is recommended to drive the car for a longer time occasionally to prevent the vehicle battery from becoming drained, especially if it is regularly driven only a short time daily (e.g. only 10 minutes) or if it is parked for 10 days or more. It may be possible to recover the state of charge and maintain the battery performance by driving for a longer time (e. g. more than 30 minutes). If you cannot drive enough, we recommend to charge the battery as needed. If no action is taken, the battery will become discharged. This is a normal characteristic of any battery.

8-8. Driving Precaution

WARNING

Never attempt to drive through pools and puddles, or roads flooded with water. Water entering the engine air intake or the exhaust pipe or water splashing onto electrical parts may damage your vehicle and may cause it to stall. In this case, contact your SUBARU dealer immediately. Regardless of its depth, it can wash away the ground from under your tires, resulting in possible loss of traction and even vehicle rollover.

CAUTION

After driving on gravel roads or rough roads, check the undercarriage of the vehicle body for any damage, deformation, or paint removal. If you notice any irregularities, contact a SUBARU dealer for an inspection as soon as possible.

8-9. Driving Tips for AWD Vehicles

WARNING

- **Always maintain a safe driving speed according to the road and weather conditions in order to avoid having an accident on a sharp turn, during sudden braking or under other similar conditions.**
- **Always use the utmost care in driving – overconfidence because you are driving an All-Wheel Drive vehicle could easily lead to a serious accident.**
- **When replacing or installing tire(s), all four tires must be the same for the following items.**
  (a) Size
  (b) Speed symbol
  (c) Load index
  (d) Circumference
  (e) Construction
  (f) Manufacturer
  (g) Brand (tread pattern)
  (h) Degrees of wear

  For items (a) to (c), you must obey the specification that is printed on the tire inflation pressure label. The tire inflation pressure label is located on the driver's door pillar.

  If all four tires are not the same in items (a) to (h), serious mechanical damage could be caused to the drivetrain of the car, and affect the followings.
  - **Ride**
  - **Handling**
  - **Braking**
  - **Speedometer/Odometer calibration**
  - **Clearance between the body and the tires**

  It also may be dangerous and lead to loss of vehicle control, and it can lead to an accident.

– CONTINUED –

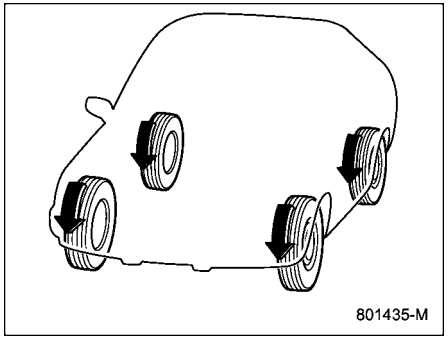

All-Wheel Drive distributes the engine power to all four wheels. AWD vehicles provide better traction when driving on slippery, wet or snow-covered roads and when moving out of mud, dirt and sand. By shifting power between the front and rear wheels, SUBARU AWD can also provide added traction during acceleration, and added engine braking force during deceleration.

Therefore, your SUBARU AWD vehicle may handle differently than an ordinary two wheel drive vehicle and it contains some features unique to AWD. For safety purposes as well as to avoid damaging the AWD system, you should keep the following tips in mind:

- An AWD vehicle is better able to climb steeper roads under snowy or slippery conditions than a two wheel drive vehicle. There is little difference in handling, however, during extremely sharp turns or sudden braking. Therefore, when driving down a slope or turning corners, be sure to reduce your speed and maintain an ample distance from other vehicles.
- Always check the cold tire pressure before starting to drive. The recommended tire pressure is provided on the tire inflation pressure label, which is located on the door pillar on the driver's side.
- Frequent driving of an AWD vehicle under hard-driving conditions such as steep hills or dusty roads will necessitate more frequent replacement of the following items than that specified in the "Warranty and Maintenance Booklet".
  - Engine oil
  - Brake fluid
  - Rear differential gear oil
  - Continuously variable transmission fluid
  - Front differential gear oil
- There are some precautions that you must observe when towing your vehicle. For detailed information, refer to "Towing" ☞P421.

8-10. Winter Driving

■ Operation during Cold Weather

Carry some emergency equipment, such as a window scraper, a bag of sand, flares, a small shovel and jumper cables.

Check the battery and cables. Cold temperatures reduce battery capacity. The battery must be in good condition to provide enough power for cold winter starts.

It normally takes longer to start the engine in very cold weather conditions. Use an engine oil of a proper grade and viscosity for cold weather. Using heavy summer oil will make it harder to start the engine.

Keep the door locks from freezing by squirting them with deicer or glycerin.

Forcing a frozen door open may damage or separate the rubber weather strips around the door. If the door is frozen, use hot water to melt the ice, and afterwards thoroughly wipe the water away.

Use a windshield washer fluid that contains an antifreeze solution. Do not use engine antifreeze or other substitutes because they may damage the paint of the vehicle.

If you fill the windshield washer tank with a fluid with a different concentration from the one used previously, purge the old fluid from the piping between the windshield washer tank and washer nozzles by operating the washer for a certain period of time. Otherwise, if the concentration of the fluid remaining in the piping is too low for the outside temperature, it may freeze and block the nozzles.

CAUTION

- **Adjust the washer fluid concentration appropriately for the outside temperature. If the concentration is inappropriate, sprayed washer fluid may freeze on the windshield and obstruct your view, and the fluid may freeze in the windshield washer tank.**
- **Be careful foreign matter does not contaminate the washer fluid when filling the tank. Contamination could cause malfunctions, such as clogging the pump.**
- **State or local regulations on volatile organic compounds may restrict the use of methanol, a common windshield washer anti-freeze additive. Washer fluids containing non-methanol anti-freeze agents should be used only if they provide cold weather protection without damaging your vehicle's paint, wiper blades or washer system.**

▼ Before driving your vehicle

Before entering the vehicle, remove any snow or ice from your shoes because that could make the pedals slippery and driving dangerous.

While warming up the vehicle before driving, check that the accelerator pedal, brake pedal, and all other controls operate smoothly.

Clear away ice and snow that has accumulated under the fenders to avoid making steering difficult. During severe winter driving, stop when and where it is safe to do so and check under the fenders periodically.

▼ Parking in cold weather

WARNING

Snow can trap dangerous exhaust gases under your vehicle. Keep snow clear of the exhaust pipe and from around your vehicle if you park the vehicle in snow with the engine running.

CAUTION

- **Do not use the parking brake when parking for long periods in cold weather since it could freeze in that position.**
- **When the vehicle is parked in snow or when it snows, raise the wiper blades off the glass to prevent damage to them.**
- **Under either of the following conditions, icing may develop on the brake system, which could cause poor braking action.**
  - **When the vehicle has been left parked after use on roads heavily covered with snow**
  - **When the vehicle has been left parked during a snowstorm**

  Check for snow or ice buildup on the suspension, disc brakes and brake hoses underneath the vehicle. If there is caked snow or ice, remove it, being careful not to damage the disc brakes and brake hoses and ABS harness.

– CONTINUED –

When parking for long periods in cold weather, you should observe the following tips.

1. Place the select lever in the “P” position.
2. Use tire stops under the tires to prevent the vehicle from moving.

▼ Refueling in cold weather

To help prevent moisture from forming in the fuel system and the risk of its freezing, use of an antifreeze additive in the fuel tank is recommended during cold weather.

Use only additives that are specifically designed for this purpose. When an anti-freeze additive is used, its effect lasts longer if the tank is refilled whenever the fuel level reaches half empty.

If your SUBARU is not going to be used for an extended period, it is best to have the fuel tank filled to capacity.

■ Driving on Snowy and Icy Roads

⚠ WARNING

Do not use the cruise control on slippery roads such as snowy or icy roads. This may cause loss of vehicle control.

⚠ CAUTION

Avoid prolonged continuous driving in snowstorms. Snow will enter the engine’s intake system and may hinder the airflow, which could result in engine shutdown or even breakdown.

To prevent skidding and slipping, avoid sudden braking, abrupt acceleration, high-speed driving, and sharp turning when driving on snowy or icy roads.

Always maintain ample distance between your vehicle and the vehicle ahead of you to avoid the need for sudden braking.

To supplement the foot brake, use the engine brake effectively to control the vehicle speed. (Shift into a lower gear when necessary.)

Avoid shifting down abruptly. Such behavior can cause the wheels to lock, possibly leading to loss of vehicle control.

An anti-lock brake system (ABS) enhances your vehicle’s braking performance on snowy and icy roads. For information about braking on slippery surfaces, refer to “ABS (Anti-Lock Brake System)” ☞P334 and “Vehicle Dynamics Control System” ☞P336.

▼ Wiper operation when snowing

Before driving in cold weather, make sure the wiper blade rubbers are not frozen to the windshield or rear window.

If the wiper blade rubbers are frozen to the windshield or rear window, perform the following procedure.

- To thaw the windshield wiper blade rubbers, use the defroster with the airflow selection in “” and the temperature set for maximum warmth until the wiper blade rubbers are completely thawed. Refer to “Defrosting” ☞P271.
- If your vehicle is equipped with a wiper deicer, use it. It is helpful to thaw the windshield wiper blade rubbers. Refer to “Defogger and Deicer” ☞P243.
- To thaw the rear wiper blade rubbers, use the rear window defogger. Refer to “Defogger and Deicer” ☞P243.

When driving in snow, if frozen snow starts to stick on the surface of the windshield despite wiper operation, use the defroster with the airflow selection in “” and the temperature set for maximum warmth. After the windshield gets warmed enough to melt the frozen snow on it, wash it away using the windshield washer. Refer to “Windshield washer” ☞P242.

Snow stuck on the wiper arm prevents the wiper from working effectively. If snow is stuck on the wiper arm, pull off the road to a safe place, then remove it. If you stop the vehicle at road side, use the hazard warning flasher to alert other drivers. Refer to “Hazard Warning Flasher” ☞P150.

We recommend use of non-freezing type wiper blades (winter blades) during the seasons you could have snow and freezing temperatures. Blades of this type give superior wiping performance in snowy conditions. Be sure to use blades that are suitable for your vehicle.

CAUTION

During high-speed driving, non-freezing type wiper blades may not perform as well as standard wiper blades. If this happens, reduce the vehicle speed.

NOTE

When the season requiring non-freezing type wiper blades is over, replace them with standard wiper blades.

■ Corrosion Protection

Refer to “Corrosion Protection” ☞P436.

■ Snow Tires

WARNING

- **When replacing or installing winter tire(s), all four tires must be the same for the following items.**

  (a) Size

  (b) Speed symbol

  (c) Load index

  (d) Circumference

  (e) Construction

  (f) Manufacturer

  (g) Brand (tread pattern)

  (h) Degrees of wear

  For items (a) to (c), you must obey the specification that is printed on the tire inflation pressure label. The tire inflation pressure label is located on the driver’s door pillar.

  If all four tires are not the same in items (a) to (h), serious mechanical damage could be caused to the drivetrain of the car, and affect the followings.

  – Ride

  – Handling

  – Braking

  – Speedometer/Odometer calibration

  – Clearance between the body and the tires

  It also may be dangerous and lead to loss of vehicle control, and it can lead to an accident.

- **Do not use a combination of radial, belted bias or bias tires since it may cause dangerous handling characteristics and lead to an accident.**

Your vehicle is equipped with “all season tires” which are designed to provide an adequate measure of traction, handling and braking performance in year-round driving. In winter, it may be possible to enhance performance through use of tires designed specifically for winter driving conditions.

If you choose to install winter tires on your vehicle, be sure to use the correct tire size and type. You must install four winter tires that are of the same size, construction, brand and load range and you should never mix radial, belted bias or bias tires since this may result in dangerous handling characteristics. When you choose a tire, make sure that there is enough clearance between the tire and vehicle

– CONTINUED –

body.

Remember to drive with care at all times regardless of the type of tires on your vehicle.

■ Tire Chains

CAUTION

Tire chains cannot be used on your vehicle because of the lack of clearance between the tires and vehicle body.

NOTE

When tire chains cannot be used, use of another type of traction device (such as spring chains) may be acceptable if use on your vehicle is recommended by the device manufacturer, taking into account tire size and road conditions. Follow the device manufacturer's instructions, especially regarding maximum vehicle speed.

To help avoid damage to your vehicle, drive slowly, readjust or remove the device if it is contacting your vehicle, and do not spin your wheels. Damage caused to your vehicle by use of a traction device is not covered under warranty.

Make certain that any traction device you use is an SAE class S device, and use it on the front wheels only. Always use the utmost care when driving with a traction device. Overconfidence because you are using a traction device could easily lead to a serious accident.

■ Rocking the Vehicle

If you must rock the vehicle to free it from snow, sand, or mud, depress the accelerator pedal slightly and move the select lever back and forth between "D" and "R" repeatedly. Do not race the engine. For the best possible traction, avoid spinning the wheels when trying to free the vehicle.

When the road surface is extremely slippery, you can obtain better traction by starting the vehicle with the transmission in 2nd than 1st.

For information on holding the transmission in 2nd position, refer to "Selection of Manual Mode" ☞P328.

8-11. Loading Your Vehicle

WARNING

Never allow passengers to ride on a folded rear seatback, in the cargo area. Doing so may result in serious injury.

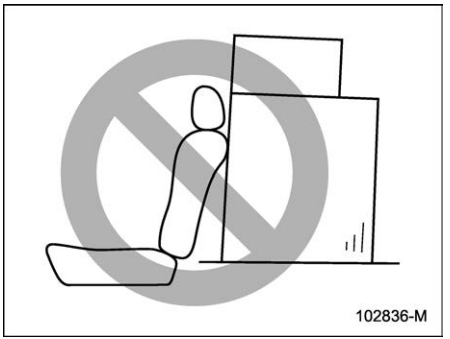

WARNING

- **Never stack luggage or other cargo higher than the top of the seatback because it could tumble forward and injure passengers in the event of a sudden stop or accident. Keep luggage or cargo low, as close to the floor as**

possible.

- When you carry something inside the vehicle, secure it whenever you can to prevent it from being thrown around inside the vehicle during sudden stops, sharp turns or in an accident.
- Do not pile heavy loads on the roof. These loads raise the vehicle's center of gravity and make it more prone to tip over.
- Secure long items properly to prevent them from shooting forward and causing serious injury during a sudden stop.
- Never exceed the maximum load limit. If you do, some parts on your vehicle can break, or it can change the way your vehicle handles. This could result in loss of control and cause personal injury. Also, overloading can shorten the life of your vehicle.
- Do not place anything on the extended cargo area cover. Such items could tumble forward in the event of a sudden stop or a collision. This could cause serious injury.

CAUTION

Do not carry spray cans, containers with flammable or corrosive liquids or any other dangerous items inside the vehicle.

NOTE

For better fuel economy, do not carry unneeded cargo.

■ Vehicle Capacity Weight

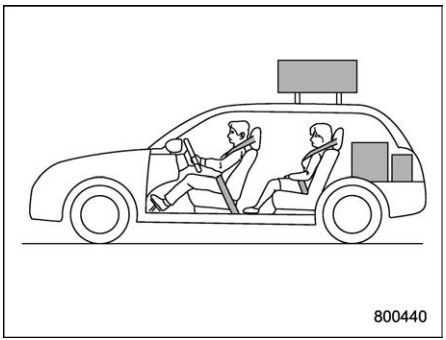

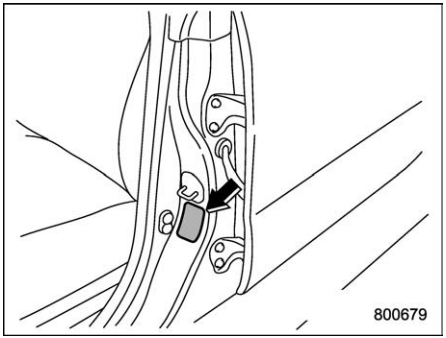

Vehicle placard

The load capacity of your vehicle is determined by weight, not by available cargo space. The maximum load you can carry in your vehicle is shown on the vehicle placard attached to the driver's side door pillar. It includes the total weight of the driver and all passengers and their belongings, any optional equipment such as roof rack or bike carrier, etc.

– CONTINUED –

GVWR and GAWR (Gross Vehicle Weight Rating and Gross Axle Weight Rating)

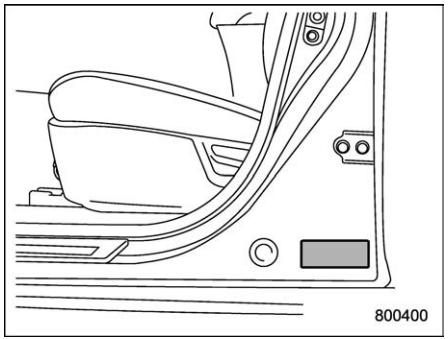

Certification label

The certification label attached to the driver's side door pillar shows GVWR (Gross Vehicle Weight Rating) and GAWR (Gross Axle Weight Rating).

The GVW (Gross Vehicle Weight) must never exceed the GVWR. GVW is the combined total of weight of the vehicle, fuel, driver, all passengers, luggage, any optional equipment and trailer tongue load. Therefore, the GVW changes depending on the situation.

In addition, the total weight applied to each axle (GAW) must never exceed the GAWR. The front and rear GAWs can be adjusted by relocating luggage inside the vehicle.

Even if the total weight of your luggage is lower than the vehicle capacity weight, either front or rear GAW may exceed the GAWR, depending on the distribution of the luggage.

When possible, the load should be evenly distributed throughout the vehicle.

If you carry heavy loads in the vehicle, you should confirm that GVW and front and rear GAWs are within the GVWR and GAWR by putting your vehicle on a vehicle scale, found at a commercial weighing station.

Do not use replacement tires with a lower load range than the originals because they may lower the GVWR and GAWR limitations. Replacement tires with a higher load range than the originals do not increase the GVWR and GAWR limitations.

Roof Molding and Crossbar

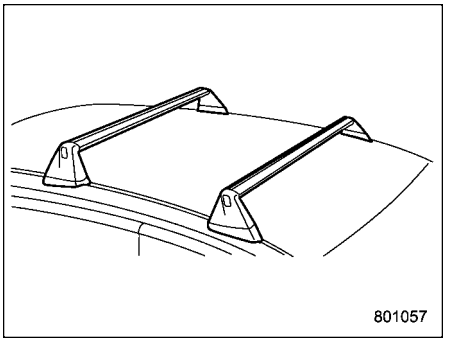

CAUTION

- **For cargo carrying purposes, the roof molding must be used together with a roof crossbar kit and the appropriate carrying attachment. Otherwise, damage to the roof or paint or a dangerous road hazard due to loss of cargo could result.**
- **When using the roof crossbar kit, make sure that the total weight of the crossbars, carrying attachment and cargo does not exceed the maximum load limit. Overloading may cause damage to the vehicle and create a safety**

hazard.

Cargo can be carried after securing the roof crossbar kit to the roof molding and installing the appropriate carrying attachment. When installing the roof crossbar kit, follow the manufacturer's instructions.

When carrying cargo on the roof using the roof crossbar kit and carrying attachments, never exceed the maximum load limit as explained below. You should also be careful that the vehicle does not exceed the Gross Vehicle Weight Rating (GVWR) and front and rear Gross Axle Weight Rating (GAWR). For information about loading cargo into or onto your vehicle, refer to "Loading Your Vehicle" ☞P400. The maximum total load on the roof (including crossbars, carrying attachments and cargo) must not exceed **176 lbs (80 kg)**. Refer to the crossbar installation instructions for the maximum crossbar capacity. Place the heaviest load at the bottom, close to the roof, and evenly distribute the cargo. Always properly secure all cargo.

▼ Installing carrying attachments on the crossbars

When installing any carrying attachments such as the load carriers, crossbars, bike carrier, ski carrier, kayak carrier, cargo basket, etc., follow the manufacturer's instructions of the load capacity and make sure that the attachments are securely installed. Use only attachments designed specifically for the crossbars. Before operating the vehicle, make sure that the cargo is properly secured on the attachment.

NOTE

Remember that the vehicle's center of gravity is altered with the weight of the load on the roof, thus affecting the driving characteristics.

Drive carefully. Avoid rapid starts, hard cornering and abrupt stops. Crosswind effects will be increased.

▼ Removal and installation of the crossbars

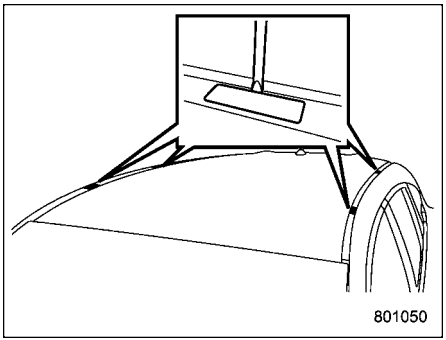

Each of the two roof moldings has two mounting points for crossbars. Each mounting point is fitted with a cover. Use a screwdriver to remove the covers. When installing the crossbars on the roof molding, follow the manufacturer's instructions.

8-12. Trailer Towing

CAUTION

Your vehicle is neither designed nor intended to be used for trailer towing. Therefore, never tow a trailer with your vehicle.

SUBARU assumes no responsibility for injuries or vehicle damage that may result from trailer towing, from any trailer towing equipment or from any errors or omissions in the instructions accompanying such equipment. SUBARU warranties do not apply to vehicle damage or malfunction caused by trailer towing.

9-1. If You Park Your Vehicle in an Emergency ... 406
9-2. Maintenance Tools ... 406
Under the Rear Floor ... 407
9-3. Flat Tires ... 407
Sealing a Flat Tire ... 407
Tire Pressure Monitoring System (TPMS) (U.S.-Spec. Models) ... 416
TPMS Screen (U.S.-Spec. Models) ... 417
9-4. Jump Starting ... 417
How to Jump Start ... 419
9-5. Engine Overheating ... 420
If Steam Is Coming from the Engine Compartment ... 420
If No Steam Is Coming from the Engine Compartment ... 420
9-6. Towing ... 421
Towing Hook and Tie-Down Hooks/Holes ... 421
Using a Flat-Bed Truck ... 424
Towing with All Wheels on the Ground ... 424
9-7. Electronic Parking Brake – If the Electronic Parking Brake Cannot Be Released ... 425
9-8. Access Key Fob – If Access Key Fob Does Not Operate Properly ... 426
Locking and Unlocking ... 426
Switching Power Status ... 426
Starting Engine ... 427
9-9. Rear Gate – If the Rear Gate Cannot Be Opened ... 427
9-10. Malfunctions of the Center Information Display ... 428
9-11. Moonroof (If Equipped) – If the Moonroof Does Not Close ... 430
9-12. If Your Vehicle Is Involved in an Accident ... 430
To Restart the Engine When Involved in an Accident ... 430
Automatic Door Locking/Unlocking Operation When Involved in an Accident ... 430

9-1. If You Park Your Vehicle in an Emergency

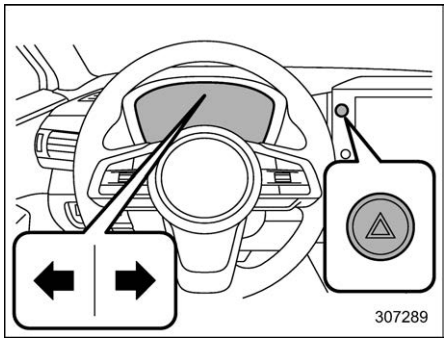

The hazard warning flasher should be used in day or night to warn other drivers when you have to park your vehicle under emergency conditions.

Avoid stopping on the road. It is best to safely pull off the road if a problem occurs.

The hazard warning flasher can be activated regardless of the ignition switch position.

Turn on the hazard warning by pressing the hazard warning flasher switch. Turn it off by pressing the switch again.

When the hazard warning flasher are flashing, the corresponding turn signal indicator will also flash.

NOTE

When the hazard warning flasher is on, the turn signals do not work.

9-2. Maintenance Tools

Your vehicle is equipped with the following maintenance tools.

- Jack
- Jack handle
- Screwdriver
- Towing hook (eye bolt)
- Wheel nut wrench

■ Under the Rear Floor

Maintenance tools are stored as shown in the following illustrations.

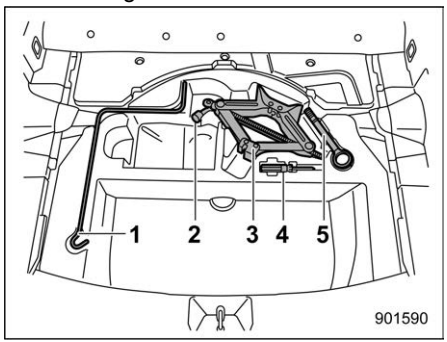

1 Jack handle
2 Wheel nut wrench
3 Jack
4 Screwdriver
5 Towing hook (eye bolt)

9-3. Flat Tires

If you have a flat tire while driving, never brake suddenly; keep driving straight ahead while gradually reducing speed. Then slowly pull off the road to a safe place.

■ Sealing a Flat Tire

WARNING

Read these instructions and warnings carefully before sealing a flat tire.

Compliance with these instructions is vital to ensuring vehicle safety. Noncompliance with these instructions means risking tire damage, which can affect vehicle handling and lead to loss of vehicle control. This may result in serious injury or death.

Your vehicle is not equipped with a spare tire. If the tire is punctured, you can seal the flat tire temporarily by using the flat tire repair kit. You can seal a flat tire caused, for example, by nails or similar objects with less than 0.2 in (4 mm). However, depending on the type and extent of tire damage, some tires can only be partially sealed or not sealed at all, and this condition may cause a loss of tire pressure. A loss of tire pressure can affect vehicle handling, leading to the loss of vehicle control.

After sealing the flat tire temporarily, change the tires with new ones as soon as possible. We recommend that you have the sealed tire changed by your nearest SUBARU dealer. You may reuse the wheel if the attached sealant is wiped off, but the valve of the wheel must be replaced with a new one. If you reuse the wheel without replacing the valve, air may leak from the valve. For tire replacement, refer to “Tire Replacement” ☞P467.

▼ Safety precautions when sealing a flat tire

Observe the following rules when sealing a flat tire.

– CONTINUED –

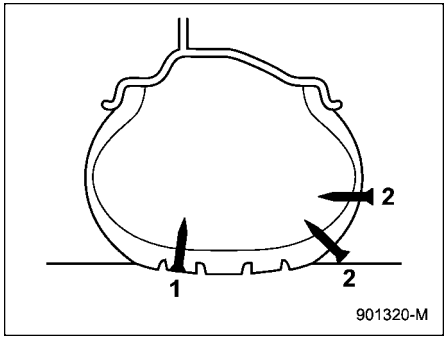

1 Sealing is possible
2 Sealing is not possible

WARNING

- **Do not use the flat tire repair kit in the following cases.**
  - **The tire has already been damaged as a result of being driven in the under inflated condition.**
  - **The tire damage is not located within the visible tread of the tire.**
  - **The tire damage is on the sidewall of the tire.**
  - **When the tire has been taken off of the wheel.**
  - **The wheel or the tire valve of the flat tire is damaged.**
  - **Two or more tires have been punctured.**
  - **The expiration date of the sealant has passed.**
  - **The tire is punctured by pointed items such as nails of 0.2 in (4 mm) or larger.**
- **When inflating the flat tire, if the tire inflation pressure does not reach the green zone of the pressure gauge within 10 minutes, do not continue to seal the tire. We recommend that you contact your SUBARU dealer.**
- **Drive with caution and avoid making sudden steering or driving maneuvers.**
- **Do not exceed a maximum speed of 50 mph (80 km/h).**
- **Do not exceed a maximum driving distance of 125 miles (200 km).**
- **Do not use tire chains on a sealed tire.**
- **If used for a purpose other than sealing a flat tire, the flat tire repair kit may cause a severe accident or injury due to the fact that compressed air can act as an explosive or propellant.**
- **Safely park your vehicle on the roadside so that you do not obstruct the flow of traffic and so that you are able to seal the flat tire without being in danger.**
- **Apply the parking brake, even if the vehicle is parked on a level road, to make sure that the vehicle will not move.**
- **Stop the engine before sealing the flat tire.**
- **Turn on the hazard warning flasher while sealing the flat tire.**
- **Do not attempt to remove foreign objects like nails or screws that have penetrated the tire. Leave them as they are.**
- **Never leave the flat tire repair kit unattended while in use.**
- **Only one tire can be repaired with one bottle of sealant.**
- **The tires can be repaired when the ambient temperature is −22°F (−30°C) or higher.**

CAUTION

- **Remember that the flat tire repair kit only provides temporary mobility. Regulations concerning tire repair after usage of flat tire repair kit may differ from country to country. We recommend that you consult your SUBARU dealer or tire dealer for advice.**
- **Store the flat tire repair kit safely and secure it in the cargo area. Storing it anywhere in the passenger compartment is not advisable because it could strike an occupant in the event of a sudden stop or collision and cause injury.**
- **Use the flat tire repair kit with original vehicle tires only.**
- **Do not keep the air compressor operating for more than 10 minutes, otherwise there is a risk of overheating.**
- **The temperature of the air compressor may become high. Be careful not to burn yourself.**
- **When raining, take measures to prevent the air compressor from being exposed directly to the rain. Exposing to rain may cause a malfunction.**
- **Do not use air compressors other than the one in the repair kit. Using an air compressor other than the one in the repair kit may damage the tires.**
- **Do not disassemble or modify the air compressor to enable the use of a power supply or a battery other than DC 12 V.**
- **If a temporary puncture repair is performed with the repair kit, the Tire Pressure Monitoring System (TPMS) may not operate normally.**

▼ Location of the flat tire repair kit

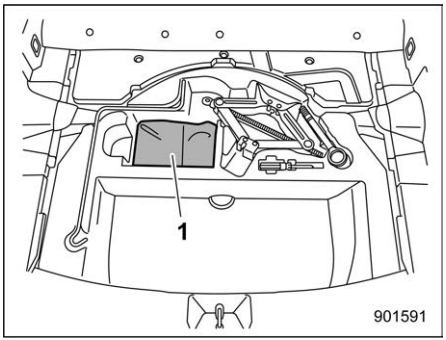

1 Flat tire repair kit

The flat tire repair kit is stored in the portion shown in the illustration.

– CONTINUED –

▼ Contents of the flat tire repair kit

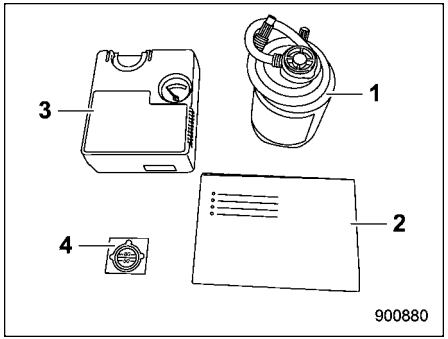

1 Sealant bottle
2 Quick reference guide
3 Air compressor
4 Speed limit label

The above repair kits are packed in a plastic bag. Return them to the plastic bag after use.

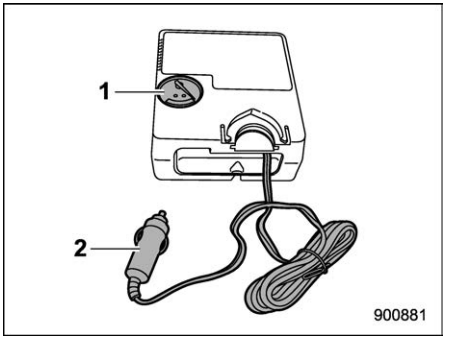

Air compressor (front side)
1 Air gauge
2 Power plug

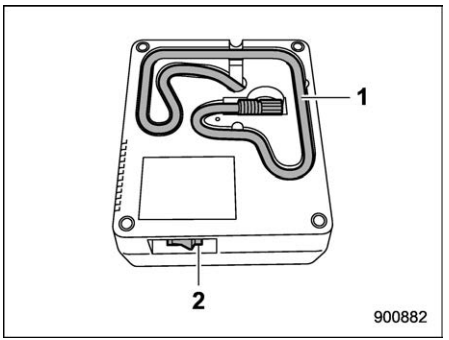

Air compressor (rear side)
1 Hose
2 Compressor switch

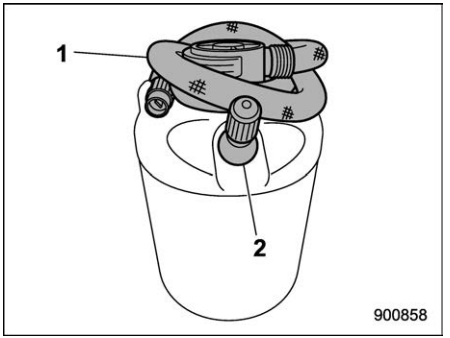

Sealant bottle
1 Hose
2 Valve

⚠ WARNING

- **Do not drink the sealant. If the sealant is accidentally swallowed, seek medical attention immediately.**
- **If the sealant splashes onto your skin or eyes, wash it away immediately with plenty of water. If necessary, seek medical attention immediately.**
- **Keep the flat tire repair kit out of the reach of children.**
- **If a person who is allergic to natural rubber comes in contact**

the sealant, allergy symptoms may occur.

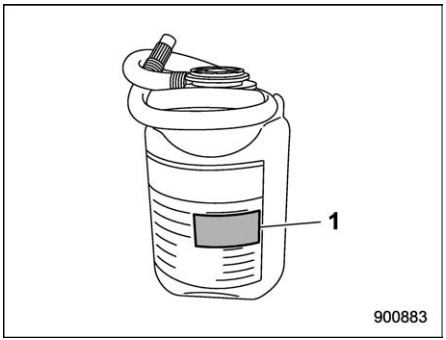

1 Expiration date

CAUTION

Replace the sealant bottle with a new one before the expiration date passes.

▼ How to seal the flat tire

To seal the flat tire, perform the following steps.

- First, pump in the sealant and air. Drive the vehicle for approximately 10 minutes or 3 miles (5 km) so that the sealant can seal the damaged area.
- Stop the vehicle again, check and, if necessary, adjust the pressure of the damaged tire.
- After that, you can continue to drive carefully no faster than 50 mph (80 km/h) and within the maximum distance of 125 miles (200 km).

Inform all other users of the vehicle that the tire has been temporarily sealed with the flat tire repair kit and make them aware of the special driving conditions to be observed.

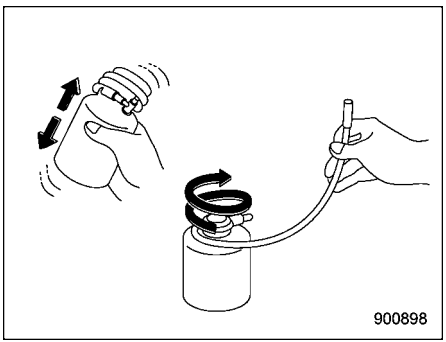

1. Shake the sealant bottle well. Loosen the hose.

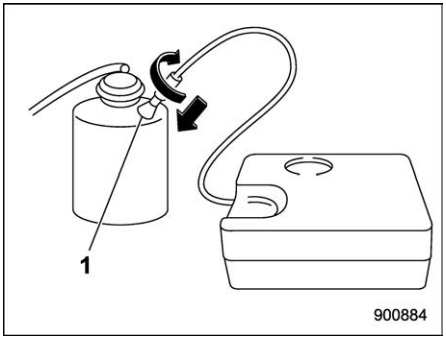

1 Valve

2. Connect the air compressor hose to the valve on the bottle.

CAUTION

- **Make sure that the air compressor switch is OFF.**
- **The sealant may leak if the fitting is not tight enough.**

– CONTINUED –

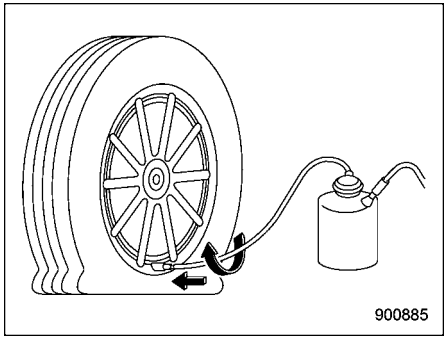

Connect the hose from the bottle to the tire valve stem tightly.

CAUTION

The sealant may leak if the fitting is not tight enough.

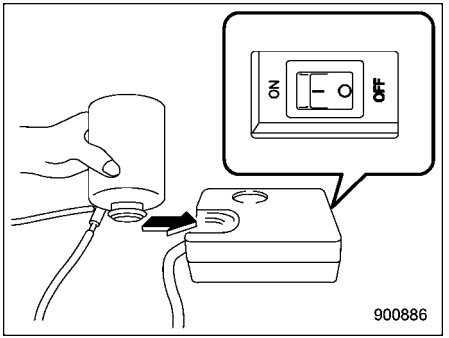

3. Turn the bottle upside down and tilt the bottle cap into the bottle holder of the air compressor. Make sure that the air compressor switch is OFF.

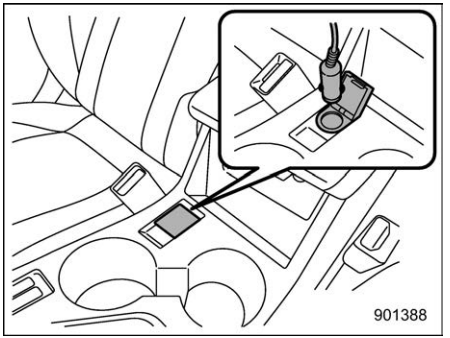

4. Connect the power plug of the air compressor into the accessory power outlet.

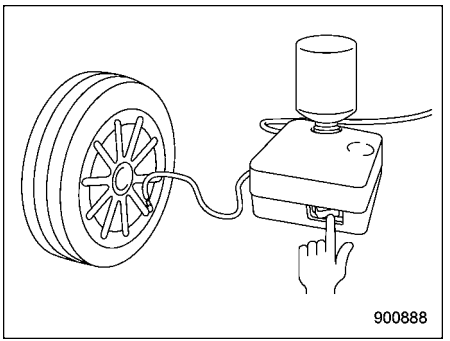

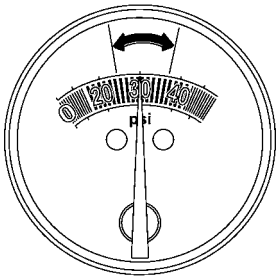

901088

Apply the parking brake and turn on the ignition switch to the “ACC” position. Turn the air compressor switch on and adjust the air pressure to the appropriate level (green zone of the air gauge).

CAUTION

- **Do not run the air compressor for more than 10 minutes as it can get hot. Be careful not to get burned.**
- **If tire pressure doesn’t reach the green zone for 10 minutes, this kit will be unable to seal the tire. Please contact your SUBARU dealer for help.**

NOTE

- **After the compressor starts to operate, the air pressure will temporarily rise to 45 psi (300 kPa, 3.0 kgf/cm²) or higher. After about 30 seconds when all of the sealant is inside the tire, the air pressure will lower, representing the air pressure in the tire.**
- **In extremely low temperatures −22°F to −4°F (−30°C to −20°C), the viscosity of the sealant increases and the sealant will flow more slowly. In such temperatures, bring the sealant into the vehicle to warm it up before use.**
- **When mending the tire, if the air pressure gauge is hard to read, turn the compressor switch off once to get an accurate reading.**

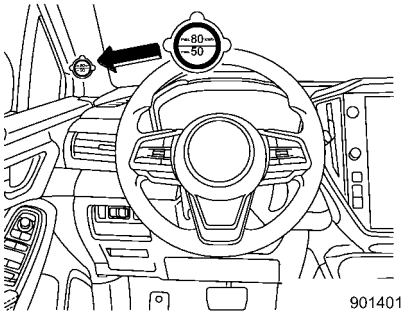

901401

5. While filling the tire with air, attach the speed limit label on the position shown in the illustration.

WARNING

Do not attach the speed limit label in a position where the label hides the warning lamp or on the steering wheel. It may interfere with the normal operation of the airbag and lead to a critical failure.

– CONTINUED –

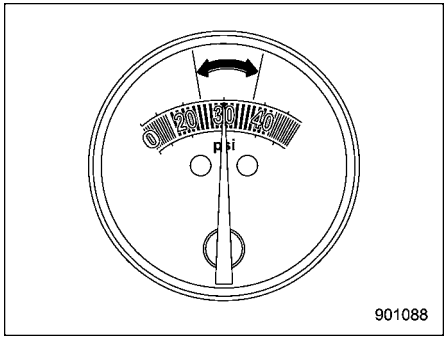

6. Turn the air compressor power switch off when the air pressure reaches the green zone of the air gauge.
   Remove the power plug from the accessory power socket.

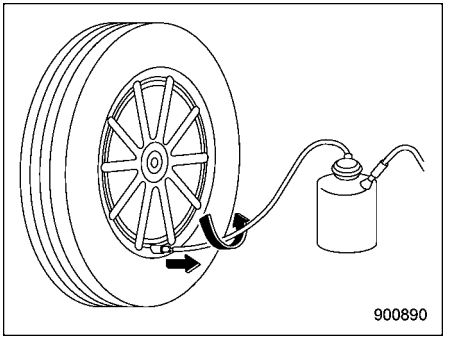

Remove the hose after filling the tire with air and fasten the valve cap.

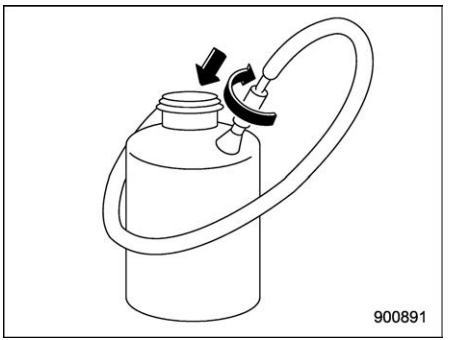

Connect the hose of the bottle to the valve of the bottle in a circular fashion to avoid leakage of the remaining sealant.

CAUTION

The sealant may stain clothing.

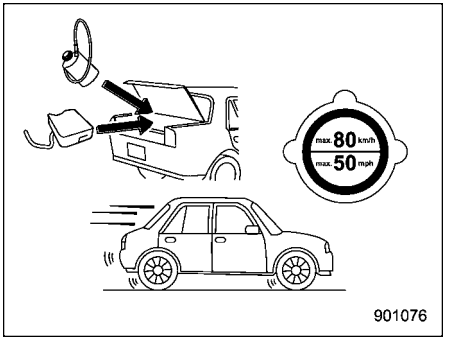

7. Stow the kit back in the vehicle and drive your vehicle immediately for 10 minutes or 3 miles (5 km).

WARNING

- **Drive carefully. Do not exceed 50 mph (80 km/h). Driving faster than that can result in the vehicle shaking.**
- **Do not use tire chains on a sealed tire.**
- **Do not tow a trailer.**
- **If heavy vibrations, unsteady steering behavior or noises oc-**

cur while driving, reduce your speed and drive with caution to a location where it is safe for you to stop the vehicle. Recheck the tire and its pressure. If the tire pressure is in the red zone of the air gauge or if there are any cracks, bumps or similar tire damage visible, temporary repairs cannot be performed with the repair kit. We recommend that you consult with your SUBARU dealer or road service provider.

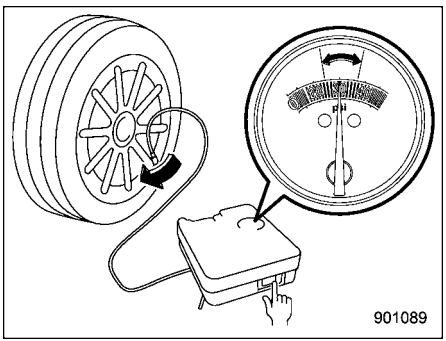

8. After driving for 10 minutes or 3 miles (5 km), whichever comes first, stop the vehicle in a safe place to recheck the air pressure (see step 4).
   If necessary, fill the tire with air to the appropriate air pressure again and drive carefully to the nearest SUBARU dealer for tire, valve stem and sealant bottle replacement.

NOTE

Connect the air compressor only to the tire valve.

⚠ CAUTION

- **If the air pressure is in red zone of the air gauge, the kit did not successfully seal the puncture. In this case, please stop driving and contact your SUBARU dealer for help.**
- **Do not drive your vehicle with the sealed tire for more than 125 miles (200 km). Failure to replace the valve stem may result in air leakage at the valve stem.**

Before the tire is removed from the rim, inform your SUBARU dealer or other tire dealer that the tire contains sealant.

⚠ CAUTION

The sealant bottle and speed limit label need to be replaced after using the flat tire repair kit.

NOTE

New sealant and replacement parts can be purchased from your authorized repair shop or SUBARU dealer, and they should also be installed into the kit by a specialist. Empty sealant bottles and replacement parts must be returned to your SUBARU dealer or disposed of in compliance with local waste disposal regulations.

▼ Technical data of air compressor

Line voltage	DC 12 V
Operating voltage	DC 10 – 15 V
Amperage	Max. 10 A

– CONTINUED –

Tire Pressure Monitoring System (TPMS) (U.S.-Spec. Models)

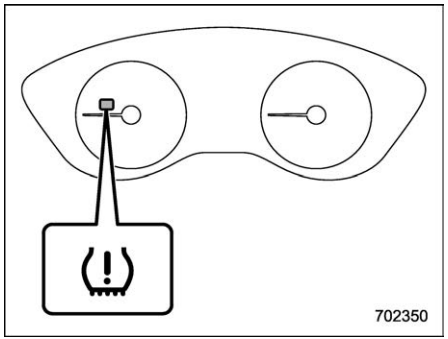

Low tire pressure warning light

The tire pressure monitoring system provides the driver with the warning message indicated by sending a signal from a sensor that is installed in each wheel when tire pressure is severely low.

The tire pressure monitoring system will activate only when the vehicle is driven. Also, this system may not react immediately to a sudden drop in tire pressure (for example, a blow-out caused by running over a sharp object).

WARNING

- **If the low tire pressure warning light illuminates while driving, never brake suddenly. Instead, perform the following procedure. Otherwise an accident involving serious vehicle damage and serious personal injury could occur.**
  - **(1) Keep driving straight ahead while gradually reducing speed.**
  - **(2) Slowly pull off the road to a safe place.**
  - **(3) Check the pressure for all four tires and adjust the pressure to the COLD tire pressure shown on the vehicle placard on the door pillar on the driver's side.**

  If this light still illuminates while driving after adjusting the tire pressure, a tire may have significant damage and a fast leak that causes the tire to lose air rapidly. If you have a flat tire, refer to "Flat Tires" ☞P407.
- **When a replacement tire is mounted or a wheel rim is replaced without the original pressure sensor/transmitter being transferred, the low tire pressure warning light will illuminate steadily after blinking for approximately one minute. This indicates the TPMS is unable to monitor all four road wheels. Contact your SUBARU dealer as soon as possible for tire and sensor replacement and/or system resetting.**
- **When a tire is repaired with liquid sealant, the tire pressure warning valve and transmitter may not operate properly. If a liquid sealant is used, contact your nearest SUBARU dealer or other qualified service shop as soon as possible. Make sure to replace the tire pressure warning valve and transmitter when replacing the tire. You may reuse the wheel if there is no damage to it and if the sealant residue is properly cleaned off.**

  If the light illuminates steadily after blinking for approximately one minute, promptly contact a SUBARU dealer to have the system inspected.

■ TPMS Screen (U.S.-Spec. Models)

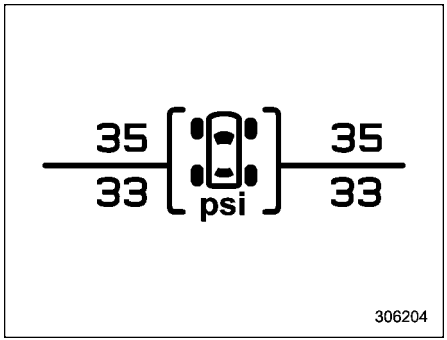

This screen displays each tire pressure. Refer to “Basic Screens” ☞P182.

9-4. Jump Starting

⚠ WARNING

- **Battery fluid is SULFURIC ACID. Do not let it come in contact with the eyes, skin, clothing or the vehicle.**

  If battery fluid gets on you, thoroughly flush the exposed area with water immediately. Get medical help if the fluid has entered your eyes.

  If battery fluid is accidentally swallowed, immediately drink a large amount of milk or water, and obtain immediate medical help.

  Keep everyone including children away from the battery.
- **The gas generated by a battery explodes if a flame or spark is brought near it. Do not smoke or light a match while jump starting.**
- **Never attempt jump starting if the discharged battery is frozen. It could cause the battery to burst or explode.**
- **Whenever working on or around a battery, always wear suitable eye protectors, and remove metal objects such as rings, bands or other metal jewelry.**
- **Be sure the jumper cables and clamps on them do not have loose or missing insulation.**
- **Do not jump start unless cables in suitable condition are available.**
- **A running engine can be dangerous. Keep your fingers, hands, clothing, hair and tools away from the cooling fan, drive belt and any other moving engine parts. Removing rings, watches and ties is advisable.**
- **Jump starting is dangerous if it is done incorrectly. If you are unsure about the proper procedure for jump starting, consult a competent mechanic.**

– CONTINUED –

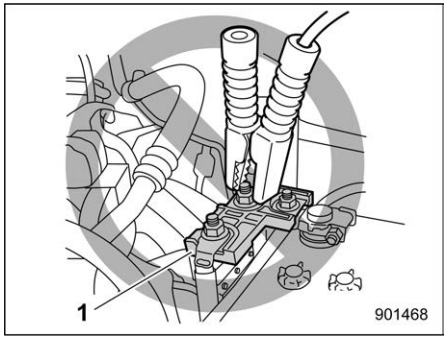

1 Fuse

WARNING

Never connect the jumper cables to a fuse near the terminal of the vehicle battery. Doing so may ignite gases generated by the battery and result in an explosion, which could damage the electronic devices and the engine.

When your vehicle does not start due to a run down (discharged) battery, the vehicle may be jump started by connecting your battery to another battery (called the booster battery) with jumper cables.

How to Jump Start

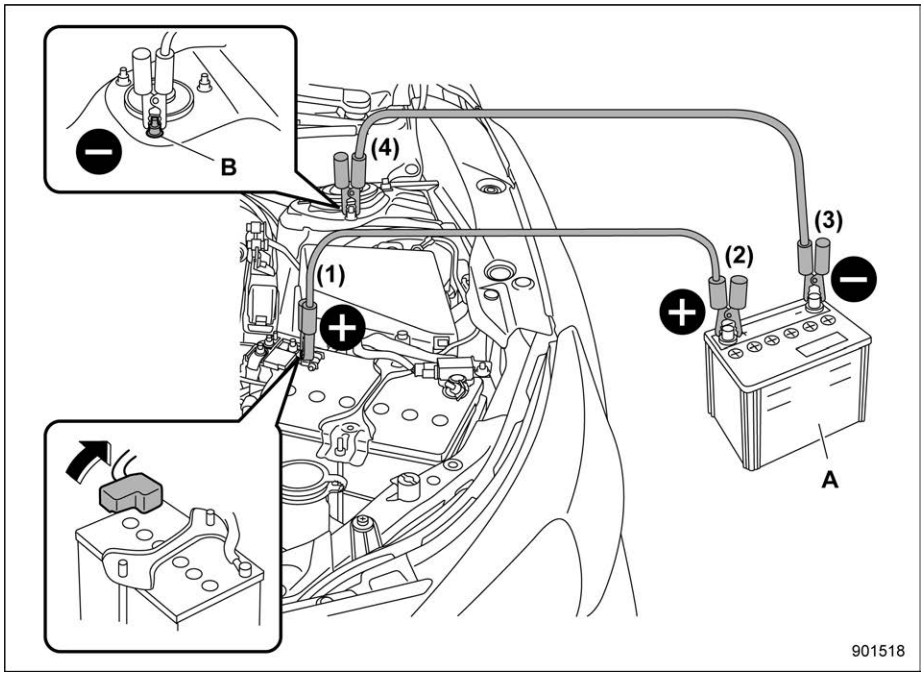

A Booster battery
B Strut mounting nut

1. Make sure the booster battery is 12 volts and the negative terminal is grounded.
2. If the booster battery is in another vehicle, do not let the two vehicles touch.
3. Turn off all unnecessary lights and accessories.
4. Connect the jumper cables exactly in the sequence illustrated.
   (1) Connect one jumper cable to the positive (+) terminal on the discharged battery.
   (2) Connect the other end of the jumper cable to the positive (+) terminal of the booster battery.
   (3) Connect one end of the other cable to the negative (−) terminal of the booster battery.
   (4) Connect the other end of the cable to the strut mounting nut.

   Make sure that the cables are not near any moving parts and that the cable clamps are not in contact with any other metal.
5. Start the engine of the vehicle with the booster battery and run it at moderate speed. Then start the engine of the

– CONTINUED –

vehicle that has the discharged battery.

6. When finished, carefully disconnect the cables in exactly the reverse order.

9-5. Engine Overheating

WARNING

Never remove the radiator cap until the engine has been shut off and has fully cooled down. When the engine is hot, the coolant is under pressure. Removing the cap while the engine is still hot could release a spray of boiling hot coolant, which could burn you very seriously.

CAUTION

If the engine overheats, the engine speed or the vehicle speed may be reduced. Stop the vehicle in a safe place immediately.

■ If Steam Is Coming from the Engine Compartment

Turn off the engine and get everyone away from the vehicle until it cools down.

■ If No Steam Is Coming from the Engine Compartment

NOTE

For details about how to check the coolant level or how to add coolant, refer to "Engine Coolant" ☞P454.

1. Keep the engine running at idling speed.
2. Open the hood to ventilate the engine compartment. Refer to "Engine Hood" ☞P448.
3. Confirm that the cooling fan is turning. If the fan is not turning, immediately turn off the engine and contact your authorized dealer for repair.
4. After the engine coolant temperature has dropped, turn off the engine.
   If the temperature gauge stays in the overheated zone, turn off the engine.
5. After the engine has fully cooled down, check the coolant level in the reserve tank.
   If the coolant level is below the "LOW" mark, add coolant up to the "FULL" mark.
6. If there is no coolant in the reserve tank, add coolant to the reserve tank. Then remove the radiator cap and fill the radiator with coolant.

If you remove the radiator cap from a hot radiator, first wrap a thick cloth around the radiator cap, then turn the cap counter-clockwise slowly without pressing down until it stops. Release the pressure from the radiator. After the pressure has been fully released, remove the cap by pressing down and turning it.

9-6. Towing

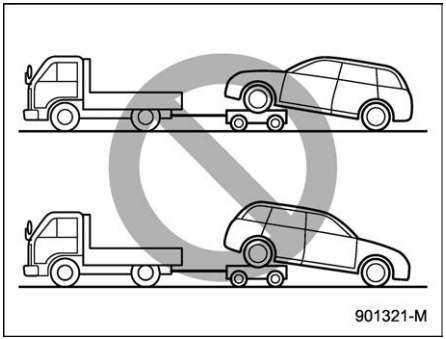

WARNING

Never tow AWD vehicles with the front wheels raised off the ground while the rear wheels are on the ground, or with the rear wheels raised off the ground while the front wheels are on the ground. This will cause the vehicle to spin away due to the operation or deterioration of the center differential.

If towing is necessary, SUBARU recommends it be done by your SUBARU dealer or a commercial towing service.

■ Towing Hook and Tie-Down Hooks/Holes

The towing hooks should be used only in an emergency.

SUBARU recommends towing be done by your SUBARU dealer or a commercial towing service.

CAUTION

- **Use only the specified towing hook and tie-down hooks/holes. Never use suspension parts or other parts of the body for towing or tie-down purposes.**
- **Never use the tie-down hole closest to the muffler under the vehicle for towing purposes.**

Front towing hook:

1. Take out the screwdriver, towing hook and jack handle from the under-floor storage compartment.

– CONTINUED –

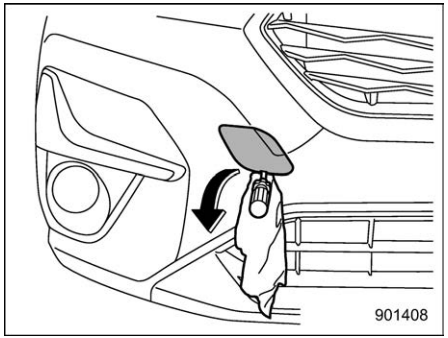

2. Cover the tip of a flat-head screwdriver with vinyl tape or cloth so that it will not scratch the bumper. Insert the flat-head screwdriver into the cutout of the cover and pry open the cover.

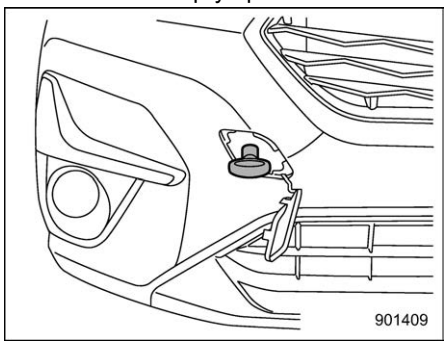

3. Screw the towing hook into the threaded hole until the threads can no longer be seen.

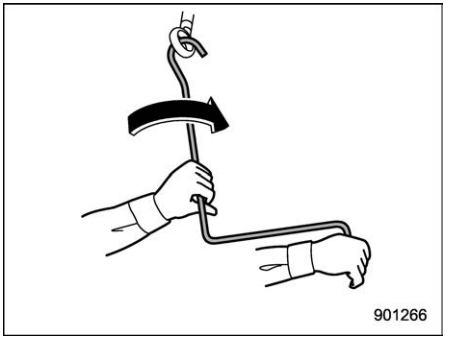

4. Tighten the towing hook securely using the jack handle.

After towing, remove the towing hook from the vehicle and stow it in the under-floor storage compartment.

Fit the towing hook cover on the bumper.

WARNING

- **Do not use the towing hook for purposes other than towing your vehicle.**
- **Be sure to remove the towing hook after towing. Leaving the towing hook mounted on the vehicle could interfere with proper operation of the SRS airbag system in a frontal collision.**

CAUTION

To prevent deformation to the bumper and the towing hook, do not apply an excessive load to the towing hook.

Rear towing hook:

1. Take out the screwdriver, towing hook and jack handle from the under-floor storage compartment.

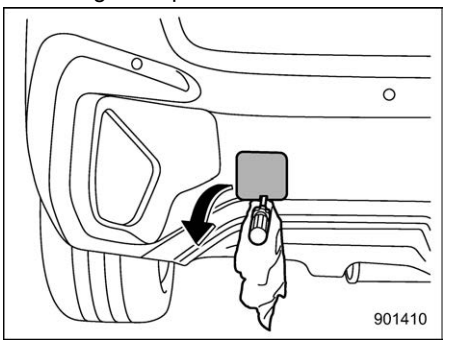

2. Cover the tip of a flat-head screwdriver with vinyl tape or cloth so that it will not scratch the bumper. Insert the flat-head screwdriver into the cutout of

the cover and pry open the cover.

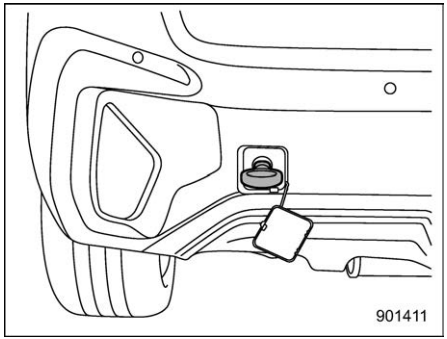

3. Screw the towing hook into the threaded hole until its thread can no longer be seen.

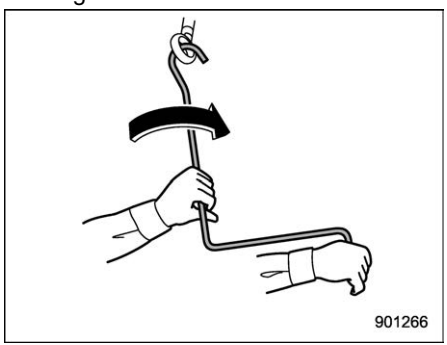

4. Tighten the towing hook securely using the jack handle.

After towing, remove the towing hook from the vehicle and stow it in the under-floor storage compartment.

Fit the towing hook cover on the bumper.

WARNING

- **Do not use the towing hook for purposes other than towing your vehicle.**
- **Be sure to remove the towing hook after towing. Leaving the towing hook mounted on the vehicle could interfere with proper operation of the fuel pump shut off function when the vehicle is struck from behind.**

CAUTION

- **To prevent deformation to the bumper and the towing hook, do not apply an excessive load to the towing hook.**
- **For models equipped with the BSD (Blind Spot Detection) and RCTA (Rear Cross Traffic Alert) driving support systems, when towing another vehicle, touch "Rear Vehicle Detection (BSD/RCTA)" to deactivate the system.**

The system may not operate properly due to the blocked radar waves. For details about how to turn on/off the BSD/RCTA, refer to "Car settings" ☞P201.

Front tie-down hooks:

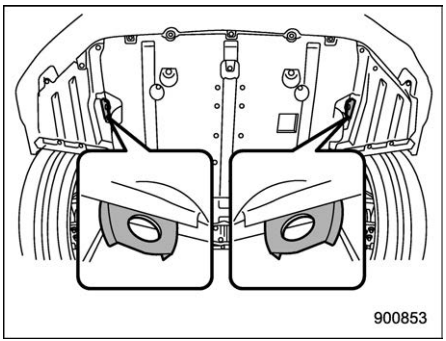

The front tie-down hooks are located between each of the front tires and the front bumper.

Front tie-down hooks are for tying down the vehicle. They are not for towing.

– CONTINUED –

Rear tie-down holes:

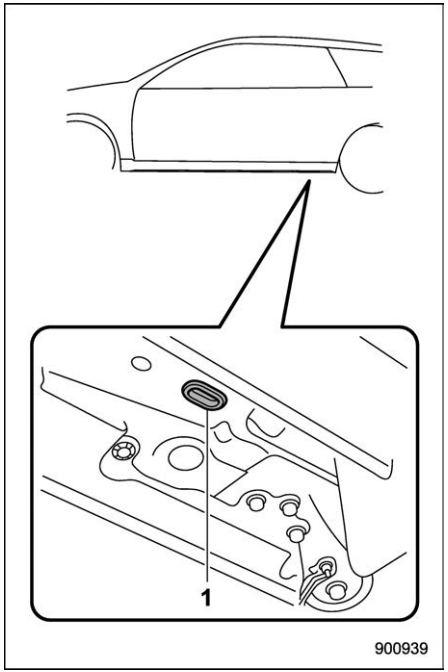

1 Rear tie-down hole

The rear tie-down holes are located near each of the jack-up reinforcements.

There is a plug in each rear tie-down hole. To use the rear tie-down holes, remove the plugs. After using the rear tie-down holes, return the plugs to their original places.

WARNING

Use the rear tie-down holes only for downward anchoring. If they are used to anchor the vehicle in any other direction, cables may slip out of the holes, possibly causing a dangerous situation.

Using a Flat-Bed Truck

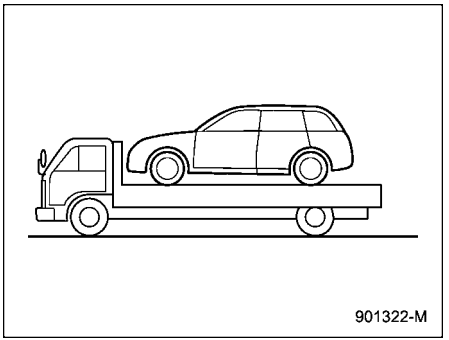

This is the best way to transport your vehicle. Use the following procedures to ensure safe transportation.

1. Shift the select lever into the “P” position.
2. Apply the parking brake firmly.
3. Secure the vehicle onto the carrier properly with safety chains. Each safety chain should be equally tightened and care must be taken not to pull the chains so tightly that the suspension bottoms out.

CAUTION

Transport by flat-bed truck may cause the headlights to become misaligned. In such a case, have the headlight alignment checked by a SUBARU dealer after transporting the vehicle by flat-bed truck.

Towing with All Wheels on the Ground

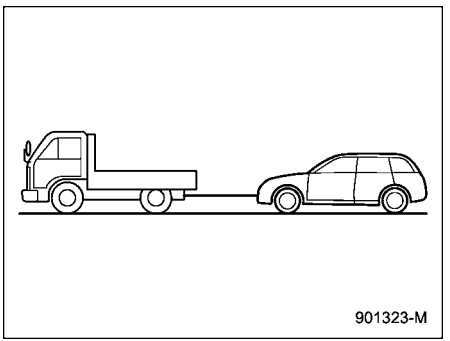

WARNING

- **Never turn the ignition switch to the "LOCK"/"OFF" position while the vehicle is being towed because the steering wheel and the direction of the wheels will be locked.**
- **Remember that the brake booster and power steering do not function when the engine is not running. Because the engine is turned off, it will take greater effort to operate the brake pedal and steering wheel.**

CAUTION

- **If transmission failure occurs, transport your vehicle on a flat-bed truck.**
- **Sometime damaged vehicles cannot be towed because of their damaged condition. In that case, use a flat-bed truck for transportation.**
- **The traveling speed must be limited to less than 20 mph (32 km/h) and the traveling distance to less than 31 miles (50 km). For greater speeds and distances, transport your vehicle on a flat-bed truck.**
- **Use a flat-bed truck if there are long distance downgrades or steep slopes. However, do not apply the brake pedal for a long time because the engine braking will not work while towing. Doing so could overheat the brake.**
- **Drive carefully and do not make an impact on the towing rope by suddenly starting.**
- **Use a specific towing rope for towing. If wire ropes and metal chains are needed to be used for towing, wrap the contact portion of the bumper with cloth to protect it from damage.**

1. Release the parking brake and put the transmission in neutral.
2. The ignition switch should be in the "ON" position while the vehicle is being towed.
3. Take up slack in the towline slowly to prevent damage to the vehicle.

9-7. Electronic Parking Brake – If the Electronic Parking Brake Cannot Be Released

Contact your SUBARU dealer and have your SUBARU dealer release the electronic parking brake.

9-8. Access Key Fob – If Access Key Fob Does Not Operate Properly

CAUTION

Keep metallic objects, magnetic sources and signal transmitters away from the area between the access key fob and the push-button ignition switch. They may interfere with the communication between the access key fob and the push-button ignition switch.

The following functions may be inoperable because of strong radio signals in the surrounding area or a low battery condition of the access key fob.

- Locking/unlocking all the doors including rear gate
- Switching the power status
- Starting the engine

In such cases, perform the following procedure. When the battery of the access key fob is discharged, replace it with a new one. Refer to "Replacing Battery of Access Key Fob" ☞P486.

■ Locking and Unlocking

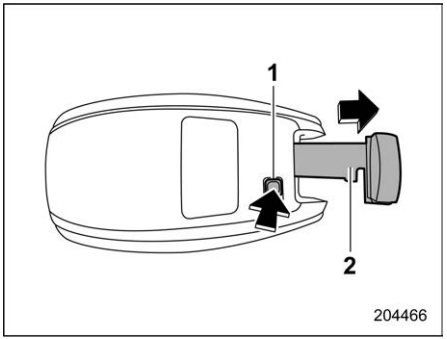

1 Release button
2 Emergency key

While pressing the release button of the access key fob, take out the emergency key.

Lock or unlock the driver's door with the emergency key in the procedure described in "Locking and Unlocking from the Outside" ☞P127.

NOTE

After locking or unlocking, be sure to attach the emergency key back to the access key fob.

■ Switching Power Status

1. Apply the parking brake.
2. Place the select lever in the "P" position.
3. Depress the brake pedal.

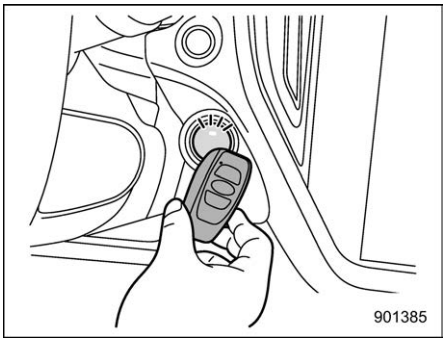

4. Hold the access key fob with the buttons facing you, and touch the push-button ignition switch with it.
   When the communication between the access key fob and the vehicle is completed, a chime (ding) will sound. At the same time, the status of the push-button ignition switch changes to either of the following.
   - When the keyless access with push-button start system is deactivated: "ACC"
   - Under other conditions: "ON"

5. When the keyless access with push-button start system is deactivated, press the push-button ignition switch with the brake pedal released. The status of the push-button ignition switch then changes to “ON”.

NOTE

If the power does not switch even though the above procedure was followed precisely, contact your SUBARU dealer.

■ Starting Engine

1. Apply the parking brake.
2. Place the select lever in the “P” position.
3. Depress the brake pedal.

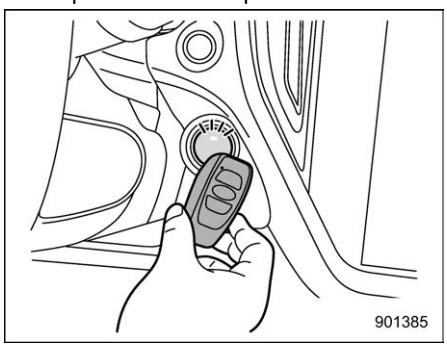

4. Hold the access key fob with the buttons facing you, and touch the push-button ignition switch with it.
   When the communication between the access key fob and the vehicle is completed, a chime (ding) will sound. At the same time, the push-button ignition switch turns to the “ACC” or “ON” position.
5. After the push-button ignition switch turns to the “ACC” or “ON” position, while depressing the brake pedal, press the push-button ignition switch.

NOTE

If the engine does not start even though the above procedure was followed precisely, contact your SUBARU dealer.

9-9. Rear Gate – If the Rear Gate Cannot Be Opened

In the event that you cannot open the rear gate by pressing the rear gate opener button, you can open it from inside the cargo area.

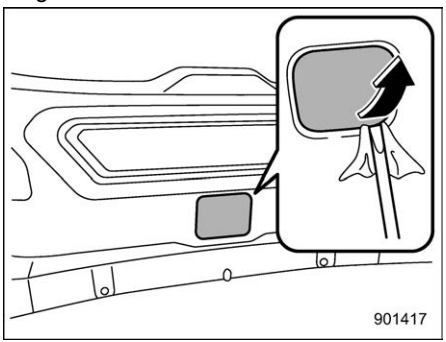

1. Cover the tip of a flat-head screwdriver with vinyl tape or cloth so that it will not scratch. Remove the access cover at the bottom-center of the rear gate trim using flat-head screwdriver.

– CONTINUED –

CAUTION

Never operate the rear gate lock release lever with your fingers because doing so may cause an injury. Always use a flat-head screwdriver or a similar tool.

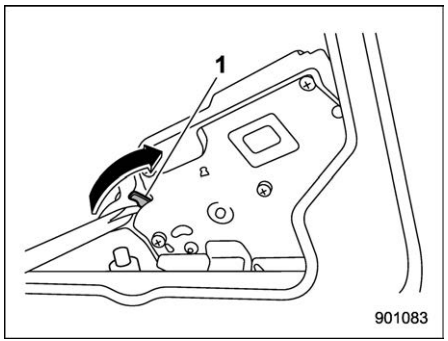

1 Rear gate lock release lever

2. Turn the rear gate lock release lever to the right position using a flat-head screwdriver or a similar tool. Then the rear gate will open.

9-10. Malfunctions of the Center Information Display

If the following screens are displayed, temporary errors or malfunctions may occur in the center information display.

If they are only temporary errors, the following procedure may help to eliminate them.

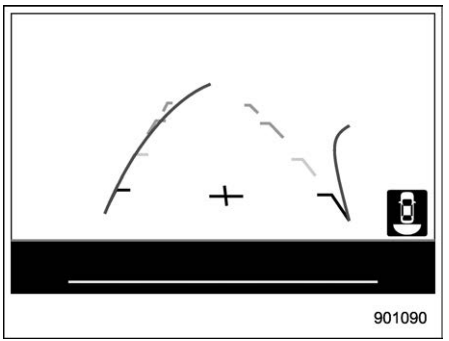

Shutting down the screen

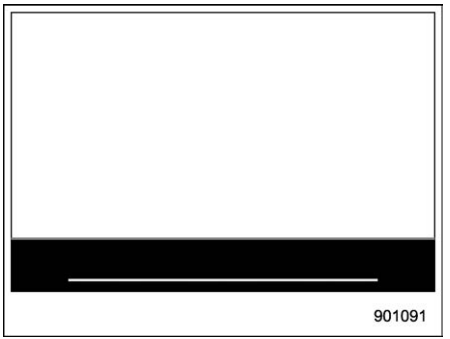

Freezing the screen

Blacking out the screen

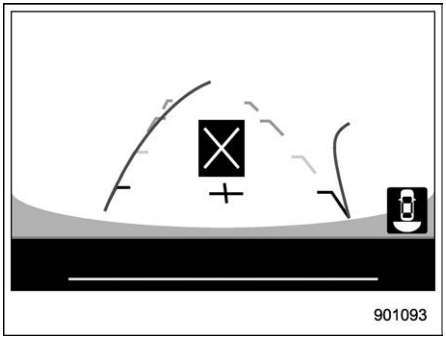

Error A

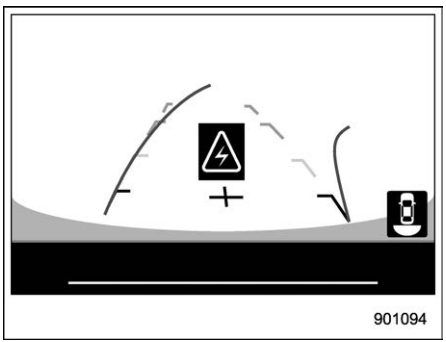

Error B

1. Park the vehicle in a safe place.
2. Turn the ignition switch once to the “LOCK/OFF” position, then start the engine.

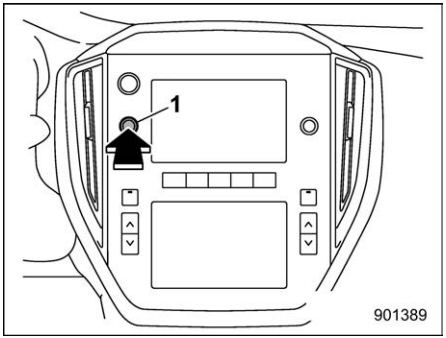

1 Volume knob (dual 7.0-inch display models)

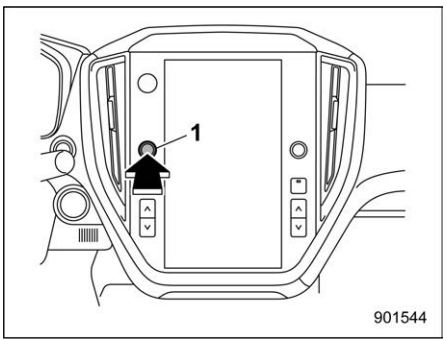

1 Volume knob (11.6-inch display models)

3. If the center information display cannot be recovered even though the engine has been restarted, press and hold the volume knob for more than 10 seconds. The center information display will start up again.
4. If the center information display is not recovered by restarting it, contact your SUBARU dealer.

9-11. Moonroof (If Equipped) – If the Moonroof Does Not Close

If the moonroof does not close, we recommend that you have the system checked by a SUBARU dealer.

9-12. If Your Vehicle Is Involved in an Accident

■ To Restart the Engine When Involved in an Accident

CAUTION

If your vehicle is involved in an accident, be sure to inspect the ground under the vehicle before restarting the engine. If you find that fuel has leaked on the ground, do not try to restart the engine. The fuel system has been damaged and is in need of repair. Immediately contact the nearest automotive service facility. We recommend that you consult your SUBARU dealer.

Your vehicle has a fuel pump shut off system. When the vehicle sustains an impact in an accident, etc., the fuel pump shut off system stops supplying the fuel in order to minimize fuel leakage. However, depending on the impact conditions at the time of collision, the fuel pump shut-off system may not operate.

Perform the following procedures to restart the engine after the system is activated.

Models without “keyless access with push-button start system”:

1. Turn the ignition switch to the “LOCK” or “ACC” position.
2. Restart the engine.

Models with “keyless access with push-button start system”:

1. Turn the push-button ignition switch to the “ACC” or “OFF” position.
2. Restart the engine.

■ Automatic Door Locking/Unlocking Operation When Involved in an Accident

When the automatic door locking/unlocking function is ON, all the doors will be locked automatically while driving. For further details, refer to “Automatic Door Locking/Unlocking” ☞P129.

When the vehicle sustains a strong impact which may trigger the airbags to deploy, the door locks may be unlocked automatically to enable emergency escape. Generally, an impact sustained from a rear end collision does not trigger the airbags to deploy. However if the impact is strong enough to deploy the airbags, it can also trigger the unlocking function.

Under such circumstance, the automatic door locking/unlocking function will be

suspended and the doors will remain unlocked.

Confirm the safety of the surroundings first and carry out the following to retrieve the automatic door locking/unlocking function.

Models without “keyless access with push-button start system”:

1. Turn the ignition switch to the “LOCK” position.
2. Turn the ignition switch to the “ON” position.

Models with “keyless access with push-button start system”:

1. Turn the push-button ignition switch to the “OFF” position.
2. Turn the push-button ignition switch to the “ON” position.

NOTE

Depending on the severity of the impact, the emergency unlocking may not function.

CAUTION

If the following occur, there may be a malfunction in the system.

Have the system inspected by a SUBARU dealer.

- **The doors unlock automatically while driving.**
- **With all doors shut, the doors unlock when pressing the lock side of the power door locking switch.**
- **The automatic door locking/unlocking function does not operate.**

Appearance Care

10-1. Exterior Care 434
Washing 434
Waxing and Polishing 435
Cleaning Alloy Wheels 435
10-2. Corrosion Protection 436
Most Common Causes of Corrosion..... 436
To Help Prevent Corrosion 436
10-3. Cleaning the Interior 437
Seat Fabric Material 437
Leather Seat Materials..... 437
Synthetic Leather Upholstery 438
Instrument Panel, Console Panel, Switches, Combination Meter, and Other Plastic Surface 438
Center Information Display 438

10-1. Exterior Care

■ Washing

CAUTION

- **When washing the vehicle, the brakes may get wet. As a result, the brake stopping distance will be longer. To dry the brakes, drive the vehicle at a safe speed while lightly pressing the brake pedal to heat up the brakes.**
- **Do not wash the engine compartment and areas adjacent to it. If water enters the engine air intake or electrical parts, it will cause engine trouble or a malfunction of the power steering.**
- **When washing inner fenders, underbody, bumpers and protruding objects such as exhaust pipes and exhaust finishers, be careful to prevent injuries from contacting sharp ends.**
- **Do not use any organic solvents when washing the surface of the bulb assembly cover. However, if a detergent with organic solvents is used to wash the cover surface, completely rinse off the detergent with water. Otherwise, the cover surface may be damaged.**
- **If the climate control system is operating when you wash the vehicle, do not set the air inlet selection of the climate control to outside air circulation mode. There is a risk that water may enter the vehicle through the air inlets.**

NOTE

When having your vehicle washed in an automatic car wash, make sure beforehand that the car wash is of suitable type.

The best way to preserve your vehicle's beauty is frequent washing. Wash the vehicle at least once a month to avoid contamination by road grime.

Wash dirt off with a wet sponge and plenty of lukewarm or cold water. Do not wash the vehicle with hot water and in direct sunlight.

Salt, chemicals, insects, tar, soot, tree sap, and bird droppings should be washed off by using a light detergent, as required. If you use a light detergent, make certain that it is a neutral detergent. Do not use strong soap or chemical detergents. All cleaning agents should be promptly flushed from the surface and not allowed to dry there. Rinse the vehicle thoroughly with plenty of lukewarm water. Wipe the remaining water off with a chamois or soft cloth. Wear rubber gloves and use a hand brush when washing down underbody, inner fenders and suspension to effectively remove mud and dirt off.

▼ Washing the underbody

Chemicals, salts and gravel used for deicing road surfaces are extremely corrosive, accelerating the corrosion of underbody components, such as the exhaust system, fuel and brake lines, brake cables, floor pan and fenders, and suspension.

Thoroughly flush the underbody and inside of the fenders with lukewarm or cold water at frequent intervals to reduce the harmful effects of such agents.

Mud and sand adhering to the underbody components may accelerate their corrosion.

After driving off-road or on muddy or sandy roads, wash the mud and sand off the underbody.

Carefully flush the suspension and axle parts, as they are particularly prone to mud and sand buildup. Do not use a sharp-edged tool to remove caked mud.

CAUTION

- **Be careful not to damage brake hoses, sensor harnesses, and other parts when washing suspension components.**
- **Be careful not to flush the engine bottom for a long time. It may cause damage of some electrical parts.**

▼ **Using a warm water washer**

- Keep a good distance of 12 in (30 cm) or more between the washer nozzle and the vehicle.
- Do not wash the same area continuously.
- If a stain will not come out easily, wash by hand. Some warm water washers are of the high temperature, high pressure type, and they can damage or deform the resin parts such as mouldings, or cause water to leak into the vehicle.

■ Waxing and Polishing

Always wash and dry the vehicle before waxing and polishing.

Use a good quality polish and wax and apply them according to the manufacturer's instructions. Wax or polish when the painted surface is cool.

Be sure to polish and wax the chrome trim, as well as the painted surfaces. Loss of wax on a painted surface leads to loss of the original luster and also quickens the deterioration of the surface. It is recommended that a coat of wax be applied at least once a month, or whenever the surface no longer repels water.

If the appearance of the paint has diminished to the point where the luster or tone cannot be restored, lightly polish the surface with a fine-grained compound. Never polish just the affected area, but include the surrounding area as well. Always polish in only one direction. A No. 2000 grain compound is recommended. Never use a coarse-grained compound. Coarser grained compounds have a smaller grain-size number and could damage the paint. After polishing with a compound, coat with wax to restore the original luster. Frequent polishing with a compound or an incorrect polishing technique will result in removing the paint layer and exposing the undercoat. When in doubt, it is always best to contact your SUBARU dealer or an auto paint specialist.

CAUTION

Do not use any agents with organic solvents on the surface of the bulb assembly cover. However, if a polish or wax with organic solvents is applied to the cover surface, completely wipe off the polish or wax. Otherwise, the cover surface may be damaged.

NOTE

Be careful not to block the windshield washer nozzles with wax when waxing the vehicle.

■ Cleaning Alloy Wheels

- Promptly wipe the alloy wheels clean of any kind of grime or agent. If dirt is left on too long, it may be difficult to clean off.
- Do not use soap containing grit to clean the wheels. Be sure to use a neutral cleaning agent, and later rinse thoroughly with water. Do not clean the wheels with a stiff brush or expose them to a high-speed washing device.

– CONTINUED –

- Clean the vehicle (including the alloy wheels) with water as soon as possible when it has been splashed with sea water, exposed to sea breezes, or driven on roads treated with salt or other agents.

10-2. Corrosion Protection

Your SUBARU has been designed and built to resist corrosion. Special materials and protective finishes have been used on most parts of the vehicle to help maintain fine appearance, strength, and reliable operation.

■ Most Common Causes of Corrosion

The most common causes of corrosion are:

- The accumulation of moisture retaining dirt and debris in body panel sections, cavities, and other areas.
- Damage to paint and other protective coatings caused by gravel and stone chips or minor accidents.

Corrosion is accelerated on the vehicle when:

- It is exposed to road salt or dust control chemicals, or used in coastal areas where there is more salt in the air, or in areas where there is considerable industrial pollution.
- It is driven in areas of high humidity, especially when temperatures range just above freezing.
- Dampness in certain parts of the vehicle remains for a long time, even though other parts of the vehicle may be dry.
- High temperatures will cause corrosion to parts of the vehicle which cannot dry quickly due to lack of proper ventilation.

■ To Help Prevent Corrosion

Wash the vehicle regularly to prevent corrosion of the body and suspension components. Also, wash the vehicle promptly after driving on any of the following surfaces.

- Roads that have been salted to prevent them from freezing in winter
- Mud, sand, or gravel
- Coastal roads

After the winter has ended, it is recommended that the underbody be given a very thorough washing.

Before the beginning of winter, check the condition of underbody components, such as the exhaust system, fuel and brake lines, brake cables, suspension, steering system, floor pan, and fenders. If any of them are found to be rusted, they should be given an appropriate rust prevention treatment or should be replaced. Contact your SUBARU dealer to perform this kind

of maintenance and treatment if you need assistance.

Repair chips and scratches in the paint as soon as you find them.

Check the interior of the vehicle for water and dirt accumulation under the floor mats because that could cause corrosion. Occasionally check under the mats to make sure the area is dry.

Keep your garage dry. Do not park your vehicle in a damp, poorly ventilated garage. In such a garage, corrosion can be caused by dampness. If you wash the vehicle in the garage or put the vehicle into the garage when wet or covered with snow, that can cause dampness.

If your vehicle is operated in cold weather and/or in areas where road salts and other corrosive materials are used, the door hinges and locks, rear gate lock, and hood latch should be inspected and lubricated periodically.

10-3. Cleaning the Interior

Use a soft, damp cloth to clean the climate control panel, audio equipment, instrument panel, center console, combination meter panel, and switches. (Do not use organic solvents.)

■ Seat Fabric Material

Remove loose dirt, dust or debris with a vacuum cleaner. If the dirt is caked on the fabric or hard to remove with a vacuum cleaner, use a soft brush then vacuum it.

Wipe the fabric surface with a tightly wrung cloth and dry the seat fabric thoroughly. If the fabric is still dirty, wipe using a solution of mild soap and lukewarm water then dry thoroughly.

If the stain does not come out, try a commercially available fabric cleaner. Use the cleaner on a hidden place and make sure it does not affect the fabric adversely. Use the cleaner according to its instructions.

⚠ CAUTION

When cleaning the seat, do not use benzine, paint thinner, or any similar materials. Doing so could damage the surface and cause the color to deteriorate.

■ Leather Seat Materials

The leather used by SUBARU is a high quality natural product which will retain its distinctive appearance and feel for many years with proper care.

Allowing dust or road dirt to build up on the surface can cause leather to become brittle and wear prematurely. To maintain its resiliency, leather should be cleaned monthly or whenever it becomes soiled.

Before cleaning leather upholstery, vacuum it to remove dust. Use a soft and lint-free cloth dampened with lukewarm water and mild soap, taking care not to soak the leather or allow water to penetrate the stitched seams. Use a gentle circular motion while cleaning the leather - do not rub or apply extreme pressure. Wipe the leather again with another clean, slightly damp cloth to remove soap residue and dry with a soft cloth.

Minor surface blemishes or difficult dirt spots may be treated with a commercial leather spray. Never use alcohol, cleaning solvents, leather oils, varnishes or polishes on your leather as it will dry out the leather finish.

– CONTINUED –

If your SUBARU is to be parked for a long time in bright sunlight, it is recommended that the seats and headrests be covered, or the windows shaded, to prevent fading or shrinkage.

You will discover that each leather seat section will develop soft folds or wrinkles, which is characteristic of genuine leather.

■ Synthetic Leather Upholstery

The synthetic leather material used on the SUBARU may be cleaned using mild soap or detergent and water, after first vacuuming or brushing away loose dirt. Allow the soap to soak in for a few minutes and wipe off with a clean, damp cloth. Commercial foam-type cleaners suitable for synthetic leather materials may be used when necessary.

⚠ CAUTION

Strong cleaning agents such as solvents, paint thinners, window cleaner or gasoline must never be used on leather or synthetic interior materials. Doing so could damage the surface and cause the color to deteriorate.

■ Instrument Panel, Console Panel, Switches, Combination Meter, and Other Plastic Surface

Use a soft, damp cloth to clean the instrument panel, center console, combination meter panel, and switches.

⚠ CAUTION

- **Do not use organic solvents such as paint thinners or gasoline, or strong cleaning agents that contain those solvents. Doing so could damage the surface and cause the color to deteriorate.**
- **Do not use chemical solvents that contain silicone on the vehicle audio system, electrical components of the air-conditioner or any switches. If silicone adheres to these parts, it may cause damage to electrical components.**

■ Center Information Display

To clean the center information display, wipe it with a silicone cloth or with a soft cloth. If the display(s) is/are extremely dirty, clean it with a soft cloth moistened with neutral detergent then carefully wipe off any remaining detergent.

⚠ CAUTION

- **Do not spray neutral detergent directly onto the display(s). Doing so could damage the monitor's components.**
- **Do not wipe the display(s) with a hard cloth. Doing so could scratch the monitor.**
- **Do not use cleaning fluid that contains thinner, gasoline, or any other volatile substance. Such cleaning fluid could erase the lettering on the switches on the display(s).**

11-1. Maintenance Schedule 443
11-2. Maintenance Precautions 443
Before Checking or Servicing in the Engine Compartment 444
When Checking or Servicing in the Engine Compartment 445
When Checking or Servicing in the Engine Compartment While the Engine Is Running 445
11-3. Maintenance Tips 446
When Replacing Parts 446
Removing and Reinstalling Clips 446
11-4. Engine Hood 448
11-5. Engine Compartment Overview 450
11-6. Engine Oil 451
Engine Oil Consumption 451
Checking the Oil Level 451
Changing the Oil and Oil Filter 452
Recommended Grade and Viscosity 453
Synthetic Oil 453
11-7. Cooling System 453
Cooling Fan, Hose and Connections 454
Engine Coolant 454
11-8. Air Cleaner Element 455
Replacing the Air Cleaner Element 456
11-9. Spark Plugs 457
Recommended Spark Plugs 457
11-10. Drive Belt 457
11-11. Continuously Variable Transmission Fluid 457
11-12. Front Differential Gear Oil and Rear Differential Gear Oil 458
Recommended Grade and Viscosity 458
11-13. Brake Fluid 458
Checking the Fluid Level 458
Recommended Brake Fluid 459
11-14. Brake Pedal 459
11-15. Replacement of Brake Pad 459
Breaking-In of New Brake Pads 460
11-16. Tires and Wheels 460
Types of Tires 460
Tire Pressure Monitoring System (TPMS) (U.S.-Spec. Models) 461
Tire Inspection 462
Tire Pressures and Wear 463
Wheel Balance 465
Wear Indicators 465
Rotational Direction of Tires 466
Tire Rotation 466
Tire Replacement 467
Wheel Replacement 470
Wheel Covers (If Equipped) 471
11-17. Alloy Wheels 472
11-18. Windshield Washer Fluid 472
11-19. Replacement of Wiper Blades 473
Windshield Wiper Blade Assembly 474
Window Wiper Blade Rubber 475
Rear Window Wiper Blade Assembly 476
Rear Window Wiper Blade Rubber 476

11-20. Battery 478
11-21. Fuses 479
11-22. Installation of Accessories..... 480
11-23. Replacing Bulbs..... 481
Headlights 481
Front Turn Signal Light, Position Light and Front Side Marker Light (If Equipped)..... 481
Rear Combination Lights 481
Back-Up Light 483
License Plate Light 484
Other Bulbs 484
Adjusting Headlight Aim..... 484
11-24. Replacing Battery 485
Replacing Battery of Access Key Fob..... 486
Replacing Battery of Transmitter 487

11-1. Maintenance Schedule

U.S. models

The scheduled maintenance items required to be serviced at regular intervals are shown in the “Warranty and Maintenance Booklet”. For details, read the separate “Warranty and Maintenance Booklet”.

Canada models

The scheduled maintenance items required to be serviced at regular intervals are shown in the “Warranty and Service Booklet”. For details, read the separate “Warranty and Service Booklet”.

Except for U.S. and Canada models

Some items of your vehicle are required to be serviced at scheduled intervals. For details about your maintenance schedule, read the separate “Warranty and Maintenance Booklet”.

11-2. Maintenance Precautions

When maintenance and service are required, it is recommended that all work be done by an authorized SUBARU dealer.

If you perform maintenance and service by yourself, you should familiarize yourself with the information provided in this section on general maintenance and service for your SUBARU.

Incorrect or incomplete service could cause improper or unsafe vehicle operation. Any problems caused by improper maintenance and service performed by you are not eligible for warranty coverage.

WARNING

- **Testing of an All-Wheel Drive vehicle must NEVER be performed on a single two-wheel dynamometer or similar apparatus. Attempting to do so will result in transmission damage and in uncontrolled vehicle movement and may cause an accident or injuries to persons nearby.**
- **Always select a safe area when performing maintenance on your vehicle.**
- **Always be very careful to avoid injury when working on the vehicle. Remember that some of the materials in the vehicle may be hazardous if improperly used or handled, for example, battery acid.**
- **Your vehicle should only be serviced by persons fully competent to do so. Serious personal injury may result to persons not experienced in servicing vehicles.**
- **Always use the proper tools and make certain that they are well maintained.**
- **Never get under the vehicle supported only by a jack. Always use safety stands to support the vehicle.**
- **Never keep the engine running in a poorly ventilated area, such as a garage or other closed areas.**
- **Do not smoke or allow open flames around the fuel or battery. This will cause a fire.**
- **Because the fuel system is under pressure, replacement of the fuel filter should be performed only by your SUBARU dealer.**

– CONTINUED –

- Wear adequate eye protection to guard against getting oil or fluids in your eyes. If something does get in your eyes, thoroughly wash them out with clean water.
- Do not tamper with the wiring of the SRS airbag system or seatbelt pretensioner system, or attempt to take its connectors apart, as that may activate the system or it can render it inoperative. NEVER use a circuit tester for these wiring. If your SRS airbag or seatbelt pretensioner needs service, consult your nearest SUBARU dealer.
- Check the inside of the engine compartment to see if there are any cloths and tools left. If they are left inside, they may be a cause of malfunction and fire.

NOTE

SUBARU does not endorse the use of non-SUBARU approved flushing systems and strongly advises against performing these services on a SUBARU vehicle. Non-SUBARU approved flushing systems use chemicals and/or solvents which have not been tested or approved by SUBARU. SUBARU warranties do not cover any part of the vehicle which is damaged by adding or applying chemicals and/or solvents other than those approved or recommended by SUBARU.

■ Before Checking or Servicing in the Engine Compartment

WARNING

- Always stop the engine and apply the parking brake to prevent the vehicle from moving.
- Always let the engine cool down. Engine parts become very hot when the engine is running and remain hot for some time after the engine is stopped.
- Do not spill engine oil, engine coolant, brake fluid or any other fluid on hot engine components. This may cause a fire.
- When the ignition switch is in the "ON" position, the cooling fan may operate suddenly even when the engine is stopped. If your body or clothes come into contact with a rotating fan, that could result in serious injury. To avoid risk of injury, perform the following precautions.
  - Models with push-button start system:
    Always turn the push-button ignition switch to the "OFF" position and confirm that the operation indicator on the switch is turned off. Then take the access key fob out from the vehicle.
  - Models without push-button start system:
    Always remove the key from the ignition switch.
- Before performing any servicing on a vehicle equipped with a remote engine start system temporarily place that system in the service mode to prevent it from unexpectedly starting the engine.

■ When Checking or Servicing in the Engine Compartment

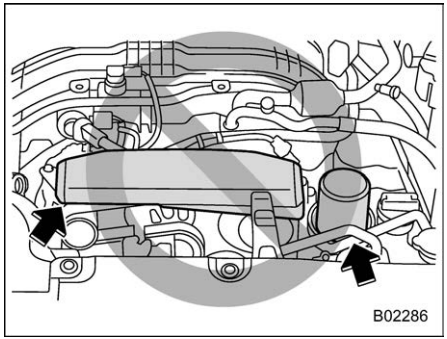

⚠ CAUTION

- **Do not contact the cover while checking the components in the engine compartment. Doing so may cause your hand to slip off the cover and result in an unexpected injury.**

- **Do not touch the oil filter until the engine has cooled down completely. Doing so may result in a burn or other injury. Note that the oil filter becomes very hot when the engine is running and remains hot for some time after the engine has stopped.**

■ When Checking or Servicing in the Engine Compartment While the Engine Is Running

⚠ WARNING

A running engine can be dangerous. Keep your fingers, hands, clothing, hair and tools away from the cooling fan, drive belt and any other moving engine parts. Removing rings, watches and ties is advisable.

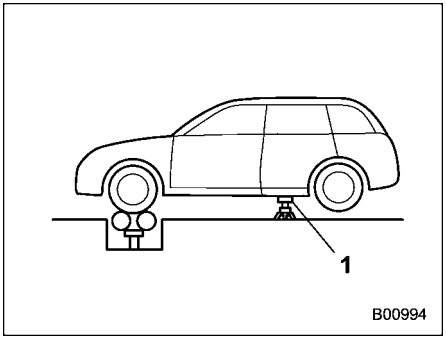

1 Safety stand

For any maintenance and inspection performed on AWD models which requires a running engine and wheels turning, jack up all four wheels or use free rollers to prevent the vehicle from moving. Never race the engine or brake suddenly.

11-3. Maintenance Tips

■ When Replacing Parts

For information about replacement parts for maintenance, we recommend that you contact any authorized SUBARU dealer or repairer, or another duly qualified and equipped professional.

■ Removing and Reinstalling Clips

Some clips and fender linings must be removed before replacing the air cleaner element or specific bulbs.

▼ Removing clips

There are several types of clips used for your vehicle.

▽ **Type A and D clips**

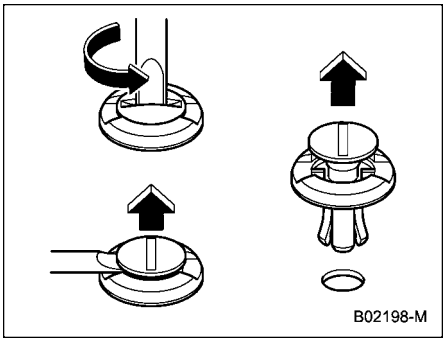

Type A clips

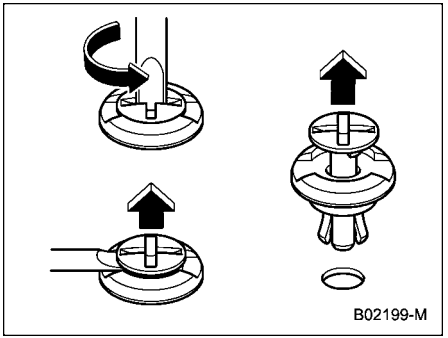

Type D clips

1. Turn the clips counterclockwise using a flat-head screwdriver until the center portion of the clip is raised.
2. Remove the clips with a flat-head screwdriver using leverage.

▽ Type B clips

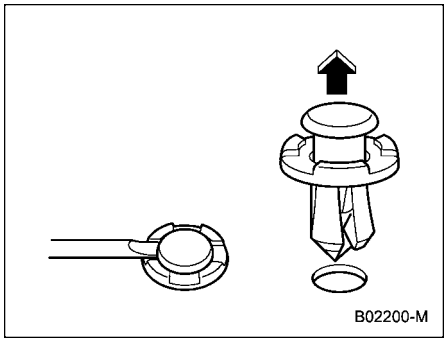

1. Pull out the center portion of the clip using a flat-head screwdriver as shown in the illustration.
2. Pull the protruded center portion to remove the entire body of the clip.

▽ Type C clips

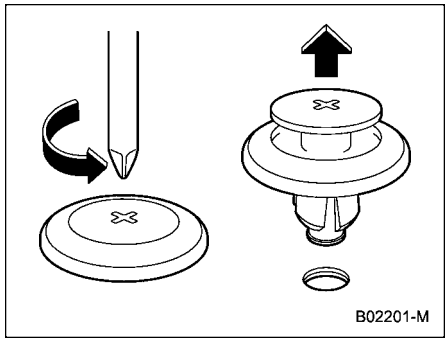

1. Turn the clip counterclockwise using a Phillips screwdriver until the center portion of the clip is raised.
2. Remove the entire clip by pulling it up.

▼ Reinstalling clips

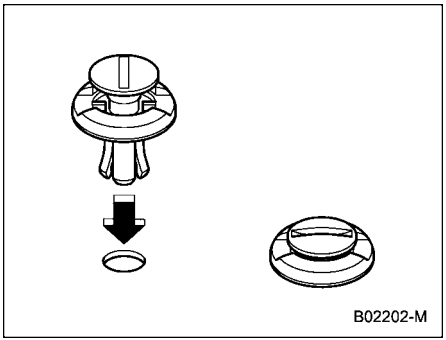

Type A clips

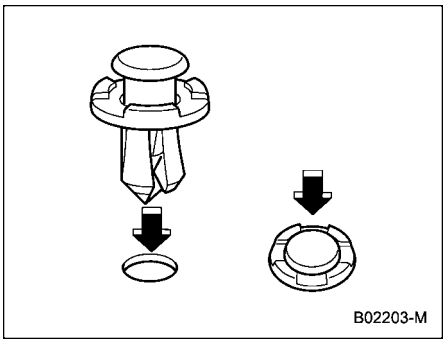

Type B clips

– CONTINUED –

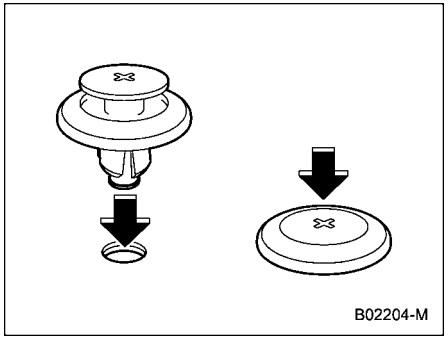

Type C clips

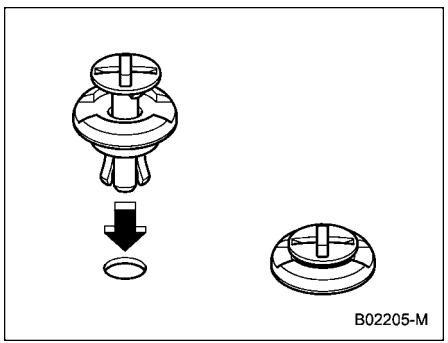

Type D clips

Insert the clip without the center portion first and then push the center portion of the clip into the hole.

11-4. Engine Hood

CAUTION

- **Be extremely careful not to catch fingers or other objects when closing the engine hood.**
- **Do not push the hood forcibly to close it. It could deform the metal.**
- **Be extremely careful opening the engine hood when the wind is strong. The engine hood could close suddenly, possibly causing injuries from slamming.**
- **Do not install accessories other than genuine SUBARU parts to the engine hood. If the engine hood becomes too heavy, the stay may not be able to support holding it open.**
- **Check that the end of the hood prop is inserted into the slot. If it is not inserted properly, the hood may drop and cause injury.**

NOTE

If the base of the hood prop is jammed, put the hood prop back in position without applying excessive force.

Opening the engine hood:

1. If the wiper blades are lifted off the windshield, return them to their original position.

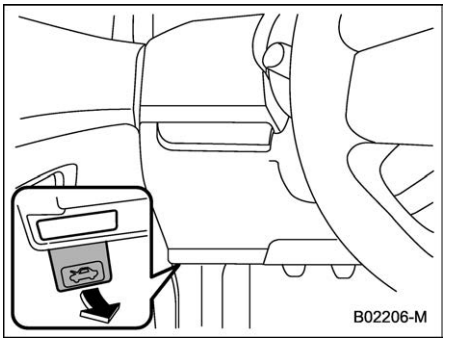

2. Pull the hood release knob under the instrument panel.

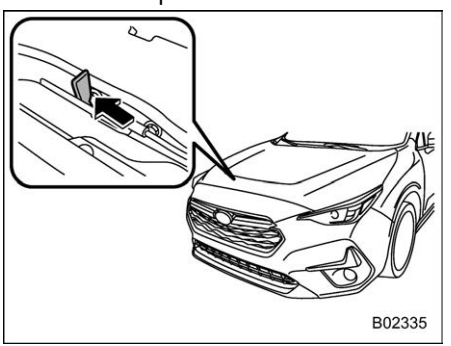

3. Release the secondary hood release by moving the lever between the front grille and the hood toward the left.

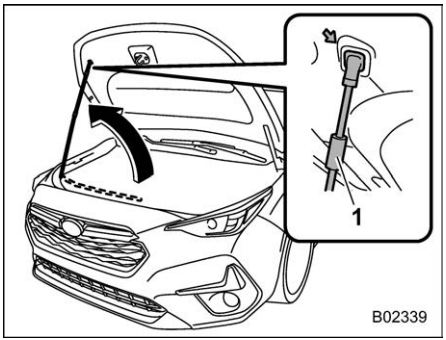

1 Grip

4. Lift up the hood, release the hood prop from its retainer and put the end of the hood prop into the slot in the hood. Hold the grip for handling the hood prop.

Closing the engine hood:

1. Lift the hood slightly and remove the hood prop from the slot in the hood and return the prop to its retainer.
2. Lower the hood to a height of approximately 7.8 to 11.8 in (20 to 30 cm) above its closed position and then let it drop.
3. After closing the hood, be sure the hood is securely locked.

If this does not close the hood, release it from a slightly higher position.

WARNING

Always check that the hood is properly locked before you start driving. If it is not, it might fly open while the vehicle is moving and block your view, which may cause an accident and serious bodily injury.

11-5. Engine Compartment Overview

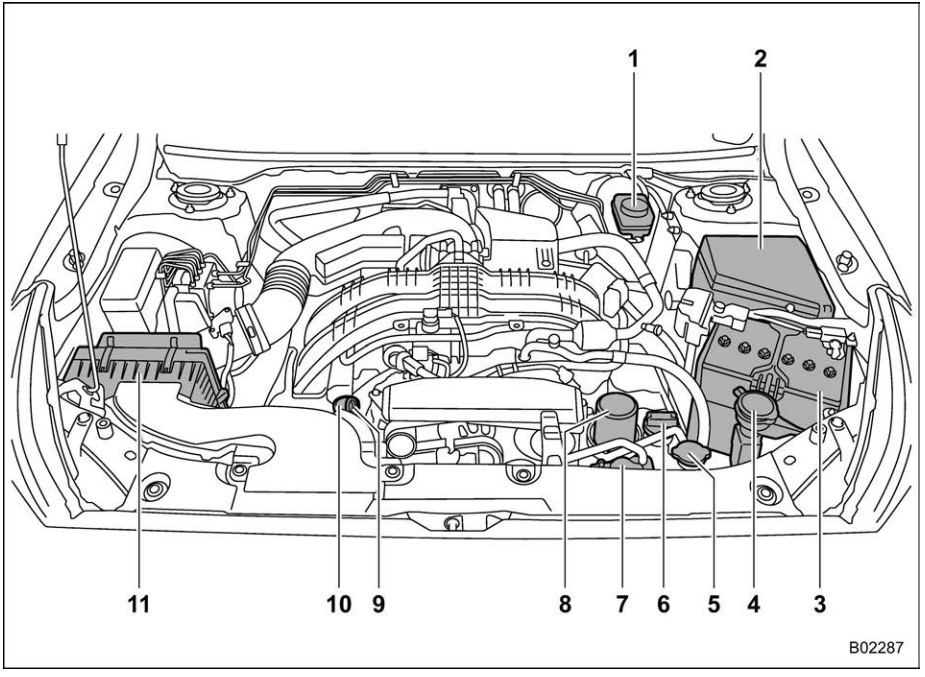

1 Brake fluid reservoir (page 458)
2 Main fuse box (page 479)
3 Battery (page 478)
4 Windshield washer tank (page 472)
5 Radiator cap (page 454)
6 Engine oil filler cap (page 451)
7 Engine coolant reservoir (page 454)
8 Engine oil filter (page 452)
9 Engine oil level gauge (page 451)
10 Coolant pipe cap (page 455)
11 Air cleaner case (page 455)

11-6. Engine Oil

CAUTION

- **If the level gauge is not pulled out easily, twist the level gauge right and left, then pull it out. Otherwise, you may be injured accidentally straining yourself.**
- **Use only engine oil with the recommended grade and viscosity.**
- **Be careful not to spill engine oil when adding it. If oil touches the exhaust pipe, it may cause a bad smell, smoke, and/or a fire. If engine oil gets on the exhaust pipe, be sure to wipe it off.**

■ Engine Oil Consumption

Some engine oil will be consumed while driving. The rate of consumption can be affected by such factors as transmission type, driving style, terrain and temperature. Under the following conditions, oil consumption can be increased and thus require refilling between maintenance intervals:

- When the engine is new and within the break-in period
- When the engine oil is of lower quality
- When the incorrect oil viscosity is used
- When engine braking is employed (repeatedly)
- When the engine is operated at high engine speeds (for extended periods of time)
- When the engine is operated under heavy loads (for extended periods of time)
- When the engine idles for extended periods of time
- When the vehicle is operated in stop and go and/or heavy traffic situations
- When the vehicle is used under severe thermal conditions
- When the vehicle accelerates and decelerates frequently

Under these or similar conditions, you should check your oil at least every 2nd fuel fill-up and change your engine oil more frequently. Different drivers in the same car may experience different results. If your oil consumption rate is greater than expected, contact your authorized SUBARU dealer who may perform a test under controlled conditions.

■ Checking the Oil Level

1. Park the vehicle on a level surface and stop the engine. If you check the oil level just after stopping the engine, wait for at least 5 minutes for the oil to drain back into the oil pan before checking the level.

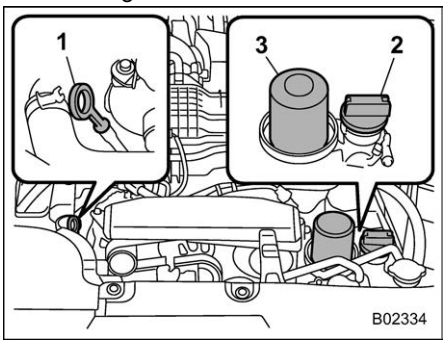

1 Oil level gauge
2 Oil filler cap
3 Oil filter

CAUTION

If the level gauge is not pulled out easily, twist the level gauge right and left, then pull it out. Otherwise, you may be injured accidentally straining yourself.

– CONTINUED –

2. Pull out the level gauge, wipe it clean, and insert it again.
3. Be sure the level gauge is correctly inserted until it stops.

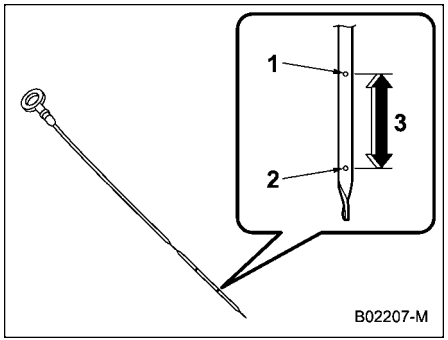

1 Full level
2 Low level
3 Approximately 1.1 US qt (1.0 liters, 0.9 Imp qt) from low level to full level

4. Pull out the oil level gauge again.
5. Check the oil levels on both sides of the level gauge. The engine oil level must be judged by the lowest of the two levels. If the oil level is below the low level mark, add oil so that the full level is reached.

CAUTION

- **Be careful not to touch the engine oil filter when removing the oil filler cap. Doing so may result in a burn, a pinched finger, or may cause some other injury.**
- **Use only engine oil with the recommended grade and viscosity.**
- **Be careful not to spill engine oil when adding it. If oil touches the exhaust pipe, it may cause a bad smell, smoke, and/or a fire. If engine oil gets on the exhaust pipe, be sure to wipe it off.**

To add engine oil, remove the engine oil filler cap and slowly pour engine oil through the filler neck. After pouring oil into the engine, you must use the level gauge to confirm that the oil level is correct.

NOTE

- **To prevent overfilling the engine oil, do not add any additional oil above the full level when the engine is cold.**
- **After adding or changing the engine oil, warm up the engine and stop it on a level surface, then start the engine after a lapse of 1 minute or more. Confirm that the warning light has turned off after the engine has started. Refer to "Engine Low Oil Level Warning Light" ☞P160.**

■ Changing the Oil and Oil Filter

Change the oil and oil filter according to the maintenance schedule in the "Warranty and Maintenance Booklet".

The engine oil and oil filter must be changed more frequently than listed in the maintenance schedule when driving on dusty roads, when short trips are frequently made, or when driving in extremely cold weather.

NOTE

- **Changing the engine oil and oil filter should be performed by a well-trained expert. Contact your SUBARU dealer for changing the engine oil and oil filter. Fully trained mechanics are on standby at a SUBARU dealer to utilize the special tools, spare parts and recommended oil for this work, and also, used oils are properly disposed of.**
- **If performing oil replacement yourself, observe the local regulations and dispose of waste oil properly.**

■ Recommended Grade and Viscosity

CAUTION

Use only engine oil with the recommended grade and viscosity.

Refer to “Engine Oil” ☞P492.

NOTE

Engine oil viscosity (thickness) affects fuel economy. Oils of lower viscosity provide better fuel economy. However, in hot weather, oil of higher viscosity is required to properly lubricate the engine.

■ Synthetic Oil

You should use synthetic engine oil that meets the same requirements given for conventional engine oil. When using synthetic oil, you must use oil of the same classification, viscosity and grade shown in this Owner’s Manual. Refer to “Engine Oil” ☞P492. Also, you must follow the oil and filter changing intervals shown in the “Warranty and Maintenance Booklet”.

NOTE

Synthetic oil of the grade and viscosity noted in chapter 12 is the recommended engine oil for optimum engine performance. Conventional oil may be used if synthetic oil is unavailable.

11-7. Cooling System

WARNING

- **Never remove the radiator cap until the engine has been shut off and has cooled down completely. Since the coolant is under pressure, you may suffer serious burns from a spray of boiling hot coolant when the cap is removed.**
- **Be careful of the rotating cooling fan when the engine hood is open. When the engine temperature is high, the cooling fan in the engine compartment may operate when the ignition switch is in the “ON” position, even if the engine is stopped. Touching the cooling fan while it is rotating may result in injury.**

CAUTION

- **Vehicles are filled at the factory with SUBARU SUPER COOLANT that does not require the first change for 11 years/137,500 miles (11 years/220,000 km). Do not mix this coolant with any**

– CONTINUED –

other brand or type of coolant during this period. Mixing with a different coolant will reduce the life of the coolant. When necessary to top up the coolant for any reason, use only SUBARU SUPER COOLANT.

If SUBARU SUPER COOLANT is diluted with another brand or type, the maintenance interval is shortened to that of the mixing coolant.

- **Do not splash the engine coolant over painted parts. The alcohol contained in the engine coolant may damage the paint surface.**

■ Cooling Fan, Hose and Connections

Your vehicle employs an electric cooling fan which is thermostatically controlled to operate when the engine coolant reaches a specific temperature.

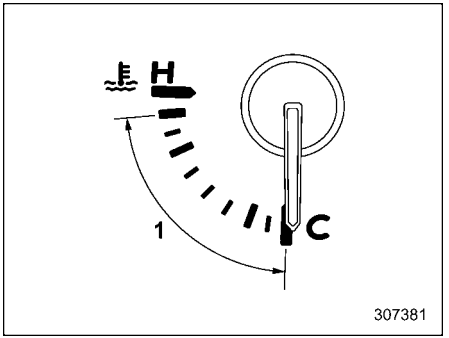

1 Normal operating range

If the radiator cooling fan does not operate even when the engine coolant temperature gauge exceeds the normal operating range, the cooling fan circuit may be defective. Refer to “Engine Coolant Temperature Gauge” ☞P152.

Check the fuse and replace it if necessary. Refer to “Fuses” ☞P479. If the fuse is not blown, have the cooling system checked by your SUBARU dealer.

If the frequent addition of coolant is necessary between vehicle service visits, it is recommended that you have your vehicle inspected by an authorized SUBARU dealer to check for leaks, damage, or looseness.

■ Engine Coolant

▼ Checking the coolant level

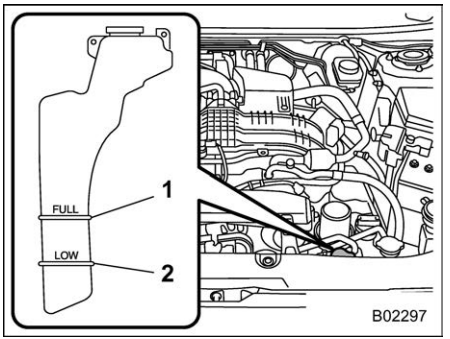

1 “FULL” level mark
2 “LOW” level mark

Check the coolant level at each fuel stop.

1. Check the coolant level on the outside of the reservoir while the engine is cool.
2. If the level is close to or lower than the “LOW” level mark, add coolant up to the “FULL” level mark. If the reserve tank is empty, remove the radiator cap and refill coolant up to just below the filler neck as shown in the following illustration.

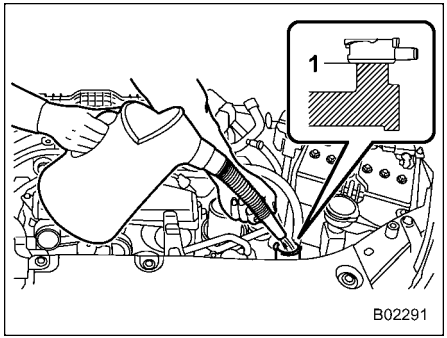

1 Fill up to this level.

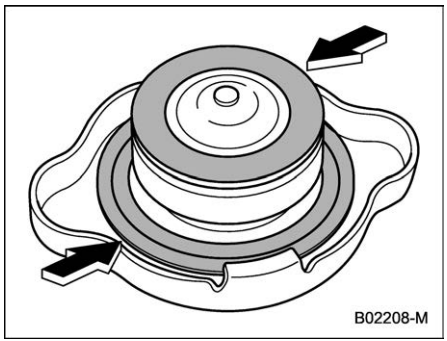

3. After refilling the reserve tank and the radiator, reinstall the cap and check that the rubber gaskets inside the radiator cap are in the proper position.

CAUTION

- **Be careful not to spill engine coolant when adding it. If coolant touches the exhaust pipe, it may cause a bad smell, smoke, and/or a fire. If engine coolant gets on the exhaust pipe, be sure to wipe it off.**
- **Do not splash the engine coolant over painted parts. The alcohol contained in the engine coolant may damage the paint surface.**

▼ Changing the coolant

It may be difficult to change the coolant. Have the coolant changed by your SUBARU dealer if necessary.

The coolant should be changed according to the maintenance schedule in the “Warranty and Maintenance Booklet”.

11-8. Air Cleaner Element

WARNING

Do not operate the engine with the air cleaner element removed. The air cleaner element not only filters intake air but also stops flames if the engine backfires. If the air cleaner element is not installed when the engine backfires, you could be burned.

CAUTION

When replacing the air cleaner element, use a genuine SUBARU air cleaner element. If it is not used, there is the possibility of causing a negative effect to the engine.

The air cleaner element functions as a filter screen. When the air cleaner element is perforated or removed, engine wear will be excessive and engine life shortened.

The air cleaner element is a dry type. It is unnecessary to clean or wash the air cleaner element.

– CONTINUED –

Replacing the Air Cleaner Element

Replace the air cleaner element according to the maintenance schedule in the “Warranty and Maintenance Booklet”. Under extremely dusty conditions, replace it more frequently. It is recommended that you always use genuine SUBARU parts.

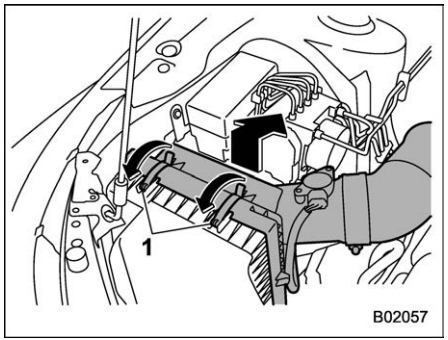

1 Clips

1. Unsnap the two clips holding the air cleaner case (rear).
2. Open the air cleaner case and pull the cover rearward while lifting it up.

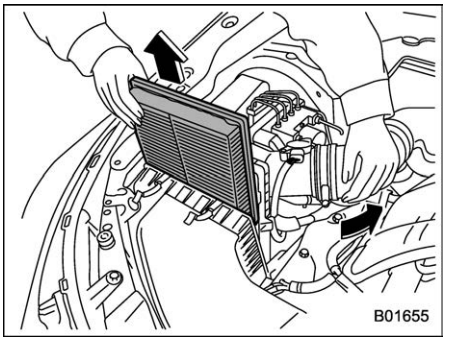

3. Remove the air cleaner element.
4. Clean the inside of the air cleaner case (both front and rear) with a damp cloth and install a new air cleaner element.

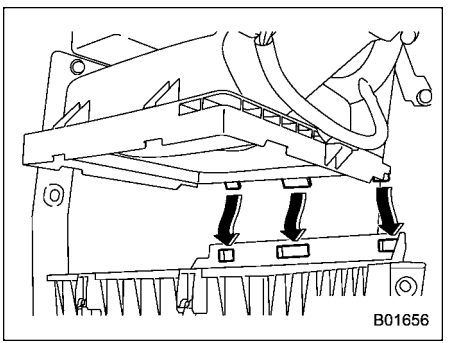

5. To install the air cleaner case (rear), insert the three projections on the air cleaner case (rear) into the slits on the air cleaner case (front).
6. Install in the reverse order of removal.

NOTE

Install the air cleaner element so that the surface with “UPR” printed on it faces upward.

11-9. Spark Plugs

It may be difficult to replace the spark plugs. It is recommended that you have the spark plugs replaced by your SUBARU dealer.

The spark plugs should be replaced according to the maintenance schedule in the “Warranty and Maintenance Booklet”.

■ Recommended Spark Plugs

Refer to “Electrical System” ☞P495.

11-10. Drive Belt

It is unnecessary to check the deflection of the drive belt periodically because your engine is equipped with an automatic belt tension adjuster. However, replacement of the drive belt should be done according to the maintenance schedule in the “Warranty and Maintenance Booklet”. Consult your SUBARU dealer for replacement.

If the drive belt is loose, cracked or worn, contact your SUBARU dealer.

11-11. Continuously Variable Transmission Fluid

There is no fluid level gauge. It is unnecessary to check the continuously variable transmission fluid level. However, if necessary, consult your SUBARU dealer for inspection.

11-12. Front Differential Gear Oil and Rear Differential Gear Oil

It is not necessary to check the gear oil level. Check that there are no cracks, damage or leakage. However, the oil inspection should be performed according to the maintenance schedule in the “Warranty and Maintenance Booklet”. Consult your SUBARU dealer for details.

■ Recommended Grade and Viscosity

Each oil manufacturer has its own base oils and additives. Never use different brands together. For details, refer to “Front Differential and Rear Differential Gear Oil” ☞P494.

CAUTION

Using a differential gear oil other than the specified oil may cause a decline in vehicle performance.

11-13. Brake Fluid

■ Checking the Fluid Level

WARNING

- **Never let brake fluid contact your eyes because brake fluid can be harmful to your eyes. If brake fluid gets in your eyes, immediately flush them thoroughly with clean water. For safety, when performing this work, wearing eye protection is advisable.**
- **Brake fluid absorbs moisture from the air. Any absorbed moisture can cause a dangerous loss of braking performance.**
- **If the vehicle requires frequent refilling, there may be a leak. If you suspect a problem, have the vehicle checked at your SUBARU dealer.**

CAUTION

- **When adding brake fluid, be careful not to allow any dirt into the reservoir.**
- **Never splash the brake fluid over painted surfaces or rubber parts. Alcohol contained in the brake fluid may damage them.**
- **Be careful not to spill brake fluid when adding it. If brake fluid touches the exhaust pipe, it may cause a bad smell, smoke, and/or a fire. If brake fluid gets on the exhaust pipe, be sure to wipe it off.**

Visually check the brake fluid level of the reservoir monthly on the even surface.

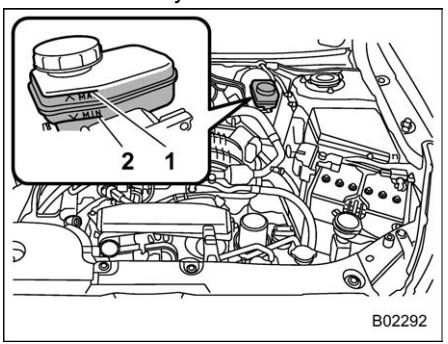

1 “MAX” level line
2 “MIN” level line

Be sure to check the brake fluid level from the outside of the reservoir. If the fluid level is below “MIN”, top up brake fluid to “MAX”. Use only brake fluid from a sealed container.

■ Recommended Brake Fluid

Refer to “Fluids” ☞P494.

CAUTION

Never use different brands of brake fluid together. Also, avoid mixing DOT 3 and DOT 4 brake fluids even if they are the same brand.

11-14. Brake Pedal

Check the brake pedal free play and reserve distance according to the maintenance schedule in the “Warranty and Maintenance Booklet”.

11-15. Replacement of Brake Pad

CAUTION

- **If you continue to drive despite the scraping noise from the audible brake pad wear indicator, it will result in the need for costly brake rotor repair or replacement.**
- **It is recommended that you disconnect the vehicle battery before replacing the brake pad. However, it is dangerous to disconnect the vehicle battery. We recommend that you have your SUBARU dealer replace the brake pad.**

– CONTINUED –

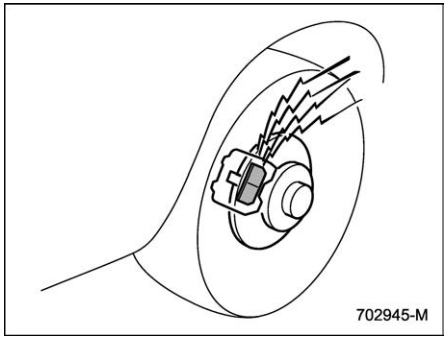

The disc brakes have audible wear indicators on the brake pads. If the brake pads wear close to their service limit, the wear indicator makes a very audible scraping noise when the brake pedal is applied.

If you hear this scraping noise each time you apply the brake pedal, have the brake pads serviced by your SUBARU dealer as soon as possible.

■ Breaking-In of New Brake Pads

When replacing the brake pad, use only genuine SUBARU parts. After replacement, the new parts must be broken in. Contact your SUBARU dealer for details.

▼ Brake pad

While maintaining a speed of 30 to 40 mph (50 to 65 km/h), step on the brake pedal lightly. Repeat this five or more times.

11-16. Tires and Wheels

■ Types of Tires

You should be familiar with type of tires present on your vehicle.

The factory-installed tires on your new vehicle are all season tires.

▼ Summer tires

Summer tires are high-speed capability tires best suited for highway driving under dry conditions.

Summer tires are inadequate for driving on slippery roads such as on snow-covered or icy roads.

If you drive your vehicle on snow-covered or icy roads, we strongly recommend the use of winter (snow) tires.

When installing winter tires, be sure to replace all four tires.

▼ All season tires

All season tires are designed to provide an adequate measure of traction, handling and braking performance in year-round driving including snowy and icy road conditions. However, all season tires do not offer as much traction performance as winter (snow) tires in heavy or loose snow or on icy roads.

All season tires are identified by “ALL SEASON” and/or “M+S” (Mud & Snow) on

the tire sidewall.

▼ **Winter (snow) tires**

Winter tires are best suited for driving on snow-covered and icy roads. However, winter tires do not perform as well as summer tires and all season tires on roads other than snow-covered and icy roads.

■ Tire Pressure Monitoring System (TPMS) (U.S.-Spec. Models)

The tire pressure monitoring system provides the driver with a warning message by sending a signal from a sensor that is installed in each wheel when tire pressure is severely low. The tire pressure monitoring system will activate only when the vehicle is driven. Also, this system may not react immediately to a sudden drop in tire pressure (for example, a blow-out caused by running over a sharp object).

If you adjust the tire pressures in a warm garage and will then drive the vehicle in cold outside air, the resulting drop in tire pressures may cause the low tire pressure warning light to illuminate. To avoid this problem when adjusting the tire pressures in a warm garage, inflate the tires to pressures higher than those shown on the tire inflation pressure label. Specifically, inflate them by an extra 1 psi (6.9 kPa, 0.07 kgf/cm2) for every difference of 10°F (5.6°C) between the temperature in the garage and the temperature outside. By way of example, the following table shows the required tire pressures that correspond to various outside temperatures when the temperature in the garage is 60°F (15.6°C).

Example:

Tire size: 205/50R17 89V, P225/40R18 88V

Standard tire pressures:

Front: 33 psi (230 kPa, 2.3 kgf/cm2)

Rear: 32 psi (220 kPa, 2.2 kgf/cm2)

Garage temperature: 60°F (15.6°C)

Outside temperature	Adjusted pressure [psi (kPa, kgf/cm2)]	
	Front	Rear
30°F (−1°C)	36 (250, 2.5)	35 (240, 2.4)
10°F (−12°C)	38 (265, 2.65)	37 (255, 2.55)
−10°F (−23°C)	41 (280, 2.8)	39 (270, 2.7)

Tire size: 205/55R16 91V

Standard tire pressures:

Front: 36 psi (250 kPa, 2.5 kgf/cm2)

Rear: 35 psi (240 kPa, 2.4 kgf/cm2)

Garage temperature: 60°F (15.6°C)

Outside temperature	Adjusted pressure [psi (kPa, kgf/cm2)]	
	Front	Rear
30°F (−1°C)	39 (270, 2.7)	38 (260, 2.6)
10°F (−12°C)	41 (285, 2.85)	40 (275, 2.75)
−10°F (−23°C)	44 (300, 3.0)	42 (290, 2.9)

If the low tire pressure warning light illuminates when you drive the vehicle in cold outside air after adjusting the tire pressures in a warm garage, re-adjust the tire pressures using the method described above. Then, increase the vehicle speed to at least 25 mph (40 km/h) and check to see that the low tire pressure warning light goes off a few minutes later. If the low tire pressure warning light does not go off, the tire pressure monitoring system may not be functioning normally. In this event, go to a SUBARU dealer to have the system inspected as soon as possible.

While the vehicle is driven, friction between tires and the road surface causes the tires to warm up. After illumination of the low tire pressure warning light, any increase in the tire pressures caused by an increase in the outside air temperature or by an increase in the temperature in the tires can cause the low tire pressure warning light to go off.

– CONTINUED –

It may not be possible to install TPMS valves on certain wheels that are on the market. Therefore, if you change the wheels (for example, a switch to snow tires), use wheels that have the same part number as the standard-equipment wheels. Without four operational TPMS valve/sensors on the wheels, the TPMS will not fully function and the warning light in the instrument panel will illuminate steadily after blinking for approximately one minute.

WARNING

If the low tire pressure warning light does not illuminate briefly after the ignition switch is turned on or the light illuminates steadily after blinking for approximately one minute, you should have your Tire Pressure Monitoring System checked at a SUBARU dealer as soon as possible.

If this light illuminates while driving, never brake suddenly. Instead, perform the following procedure. Otherwise an accident involving serious vehicle damage and serious personal injury could occur.

1) Keep driving straight ahead while gradually reducing speed.

2) Slowly pull off the road to a safe place.

If this light still illuminates while driving after adjusting the tire pressure, a tire may have significant damage and a fast leak that causes the tire to lose air rapidly. If you have a flat tire, refer to "Flat Tires" ☞P407.

When a replacement tire is mounted or a wheel rim is replaced without the original pressure sensor/transmitter being transferred, the low tire pressure warning light will illuminate steadily after blinking for approximately one minute. This indicates the TPMS is unable to monitor all four road wheels. Contact your SUBARU dealer as soon as possible for tire and sensor replacement and/or system resetting. If the light illuminates steadily after blinking for approximately one minute, promptly contact a SUBARU dealer to have the system inspected.

▼ TPMS valve self-registration

When the wheels are replaced (such as when installing snow tires) or when a new TPMS valve is mounted on a new installed wheel, you will need to perform TPMS valve self-registration. Refer to the following procedure to perform TPMS valve self-registration.

1. Install the wheels with TPMS valves on the vehicle.
2. Adjust the tire pressure to the specified value. For information about the specified value of the tire pressure, refer to "Tires" ☞P495.
3. Drive at speeds above 25 mph (40 km/h) for at least 4 miles (6 km) or until the low tire pressure warning light turns off.

NOTE

- **When installing TPMS valves, use only genuine SUBARU parts.**
- **Registration of TPMS valves can also be done at a SUBARU dealer. Consult your SUBARU dealer.**

■ Tire Inspection

Check on a daily basis that the tires are free from serious damage, nails, and stones. At the same time, check the tires for abnormal wear.

Contact your SUBARU dealer immediately if you find any problem.

NOTE

- **When the wheels and tires strike curbs or are subjected to harsh treatment as when the vehicle is driven on a rough surface, they can suffer damage that cannot be seen with the naked eye. This type of damage does not become evident until time has passed. Try not to drive over curbs, potholes or on other rough surfaces. If doing so is unavoidable, keep the vehicle's speed down to a walking pace or less, and approach the curbs as squarely as possible. Also, make sure the tires are not pressed against the curb when you park the vehicle.**
- **If you feel unusual vibration while driving or find it difficult to steer the vehicle in a straight line, one of the tires and/or wheels may be damaged. Drive slowly to the nearest authorized SUBARU dealer and have the vehicle inspected.**

■ Tire Pressures and Wear

Maintaining the correct tire pressures helps to maximize the tires' service lives and is essential for good running performance. Check and, if necessary, adjust the pressure of each tire at least once a month and before any long journey.

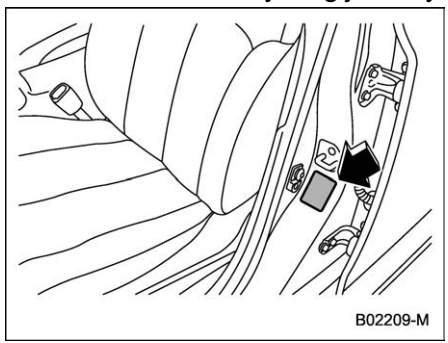

Tire inflation pressure label

Check the tire pressures when the tires are cold. Use a pressure gauge to adjust the tire pressures to the values shown on the tire inflation pressure label. The tire inflation pressure label is located on the door pillar on the driver's side.

Driving even a short distance warms up the tires and increases the tire pressures. Also, the tire pressures are affected by the outside temperature. It is best to check tire pressure outdoors before driving the vehicle.

When a tire becomes warm, the air inside it expands, causing the tire pressure to increase. Be careful not to mistakenly release air from a warm tire to reduce its pressure.

NOTE

- **The air pressure in a tire increases by approximately 4.3 psi (30 kPa, 0.3 kgf/cm^2) when the tire becomes warm.**
- **The tires are considered cold when the vehicle has been parked for at least 3 hours or has been driven less than 1 mile (1.6 km).**

– CONTINUED –

WARNING

Do not let air out of warm tires to adjust pressure. Doing so will result in low tire pressure.

Incorrect tire pressures detract from controllability and ride comfort, and they cause the tires to wear abnormally.

- Correctly inflated tires (tread worn evenly)

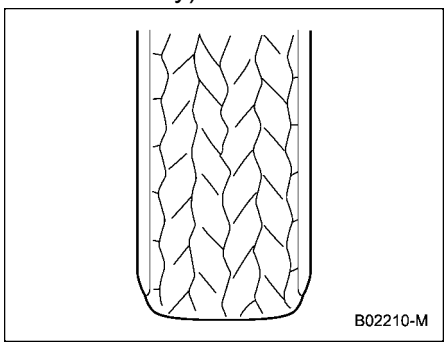

Roadholding is good, and steering is responsive. Rolling resistance is low, so fuel consumption is also lower.

- Under inflated tires (tread worn at shoulders)

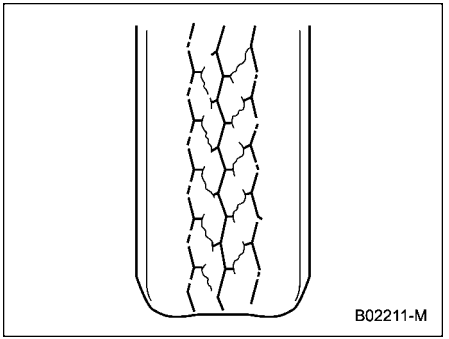

Rolling resistance is high, so fuel consumption is also higher.

- Over inflated tires (tread worn in center)

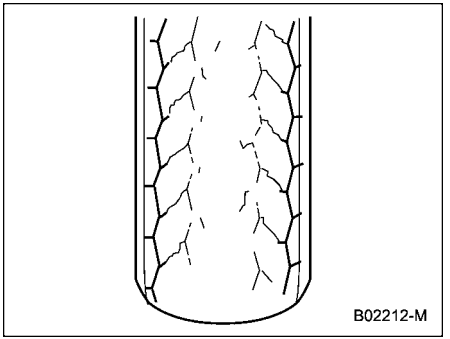

Ride comfort is poor. Also, the tire magnifies the effects of road surface bumps and dips, possibly resulting in vehicle damage.

WARNING

Driving at high speeds with excessively low tire pressures can cause the tires to deform severely and to rapidly become hot. A sharp increase in temperature could cause tread separation, and destruction of the tires. The resulting loss of

vehicle control could lead to an accident.

■ Wheel Balance

Each wheel was correctly balanced when your vehicle was new, but the wheels will become unbalanced as the tires become worn during use. Wheel imbalance causes the steering wheel to vibrate slightly at certain vehicle speeds and detracts from the vehicle's straight-line stability. It can also cause steering and suspension system problems and abnormal tire wear. If you suspect that the wheels are not correctly balanced, have them checked and adjusted by your SUBARU dealer. Also have them adjusted after tire repairs and after tire rotation.

⚠ CAUTION

Loss of correct wheel alignment causes the tires to wear on one side and reduces the vehicle's running stability.

Contact your SUBARU dealer if you notice abnormal tire wear.

NOTE

The suspension system is designed to hold each wheel at a certain alignment (relative to the other wheels and to the road) for optimum straight-line stability and cornering performance.

■ Wear Indicators

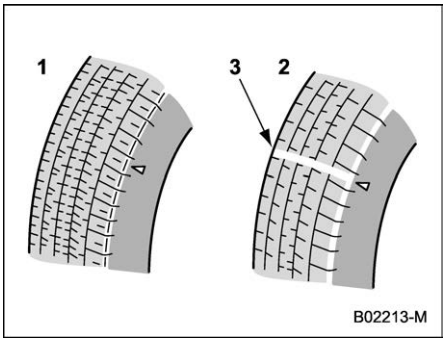

1 New tread
2 Worn tread
3 Tread wear indicator

Each tire incorporates a tread wear indicator, which becomes visible when the depth of the tread grooves decreases to 0.063 in (1.6 mm). A tire must be replaced when the tread wear indicator appears as a solid band across the tread.

⚠ WARNING

When a tire's tread wear indicator becomes visible, the tire

– CONTINUED –

is worn beyond the acceptable limit and must be replaced immediately. With a tire in this condition, driving at high speeds in wet weather can cause the vehicle to hydroplane. The resulting loss of vehicle control can lead to an accident.

NOTE

For safety, inspect the tire tread regularly and replace the tires before their tread wear indicators become visible.

■ Rotational Direction of Tires

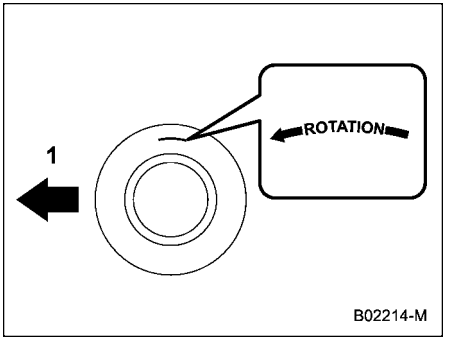

Example of rotational direction marked on the sidewall

1 Front

If the tires have specific rotational direction, refer to the arrow marked on the side wall.

The arrow should be pointing forward direction when the wheels are fitted.

■ Tire Rotation

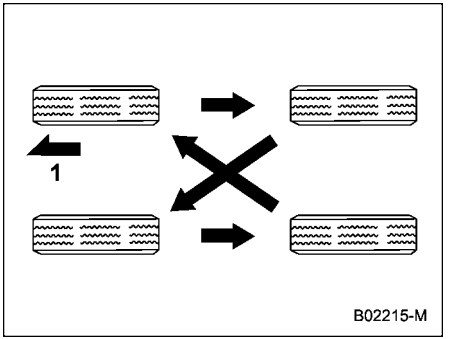

Vehicles equipped with 4 non-unidirectional tires

1 Front

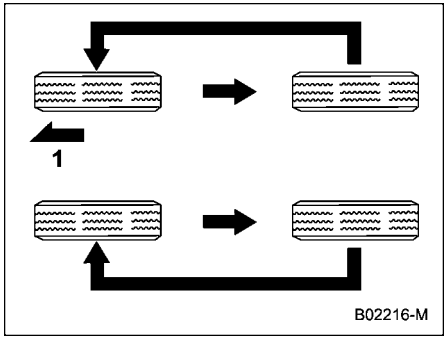

Vehicles equipped with unidirectional tires

1 Front

Tire wear varies from wheel to wheel. Move the tires to the positions shown in the illustration each time they are rotated. For the tire rotation schedule, refer to the "Warranty and Maintenance Booklet".

Replace any damaged or unevenly worn tire at the time of rotation. After tire rotation, adjust the tire pressures and make sure the wheel nuts are correctly tightened.

After driving approximately 600 miles (1,000 km), check the wheel nuts again and retighten any nut that has become loose.

■ Tire Replacement

The wheels and tires are important and integral parts of your vehicle's design; they cannot be changed arbitrarily. The tires fitted as standard equipment are optimally matched to the characteristics of the vehicle and were selected to give the best possible combination of running performance, ride comfort, and service life. It is essential for every tire to have a size and construction matching those shown on the tire inflation pressure label. For more details about tire inflation pressure, refer to "Tires" ☞P495.

Using tires of a non-specified size detracts from controllability, ride comfort, braking performance, speedometer accuracy and odometer accuracy. It also creates incorrect body-to-tire clearances and inappropriately changes the vehicle's ground clearance.

All four tires must be the same in terms of manufacturer, brand (tread pattern), construction, and size. You are advised to replace the tires with new ones that are identical to those fitted as standard equipment.

For safe vehicle operation, SUBARU recommends replacing all four tires at the same time.

⚠ WARNING

- **When replacing or installing tire(s), all four tires must be the same for the following items.**
  (a) Size
  (b) Speed symbol
  (c) Load index
  (d) Circumference
  (e) Construction
  (f) Manufacturer
  (g) Brand (tread pattern)
  (h) Degrees of wear
  For items (a) to (c), you must obey the specification that is printed on the tire inflation pressure label. The tire inflation pressure label is located on the driver's door pillar.
  If all four tires are not the same in items (a) to (h), serious mechanical damage could be caused to the drivetrain of the car, and

– CONTINUED –

affect the followings.
- Ride
- Handling
- Braking
- Speedometer/Odometer calibration
- Clearance between the body and the tires

It also may be dangerous and lead to loss of vehicle control, and it can lead to an accident.

- Use only radial tires. Do not use radial tires together with belted bias tires and/or bias-ply tires. Doing so can dangerously reduce controllability, resulting in an accident.

▼ Replacement procedure

WARNING

- Do not jack up the vehicle on an incline or a loose road surface. The jack can come out of the jacking point or sink into the ground and this can result in serious injury or death.
- Use only the jack and the jack handle provided with your vehicle. The jack supplied with the vehicle is designed only for changing a tire. Never put any part of your body under the vehicle while the vehicle is being supported by the jack. Doing so could result in serious injury or death.
- Before jacking up the vehicle, be sure that there are no occupants or cargo on board.
- Do not jack up the vehicle with an object on or underneath the jack. The jack can be unstable and this can result in a severe accident.
- Always turn off the engine before raising the tire off the ground using the jack. Never swing or push the vehicle supported with the jack. The jack can come out of the jacking point due to a jolt and this can result in serious injury or death.
- All passengers must exit the vehicle before you raise it with the jack. Raising the vehicle with someone inside of it could result in serious injury or death.
- Do not start the vehicle while it is supported by the jack. Doing so could result in serious injury or death.

CAUTION

Do not hit and bend the disc rotor backing plate when removing and installing the tire. A bent backing plate may scrape against the disc rotor and cause noise while the vehicle is in motion.

NOTE

Contact a SUBARU dealer when jacking up the vehicle using a garage jack.

1. Park on a hard, level surface, whenever possible, then stop the engine.
2. Apply the parking brake securely and shift the select lever into the “P” (Park) position.
3. Turn on the hazard warning flasher and unload all occupants and luggage from the vehicle.

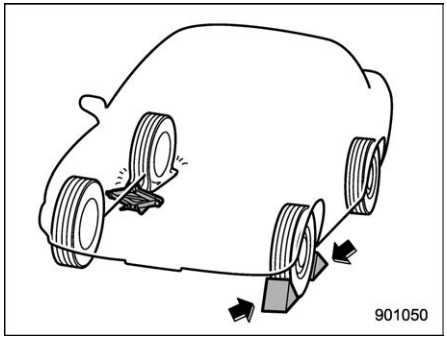

4. Put wheel blocks at the front and rear of the tire diagonally opposite the tire to be replaced.
5. Take out the jack, jack handle and wheel nut wrench. Refer to “Maintenance Tools” ☞P406.

NOTE

Make sure that the jack is well lubricated before using it.

6. If your vehicle has wheel covers, remove them. Refer to “Removing the wheel cover” ☞P471.

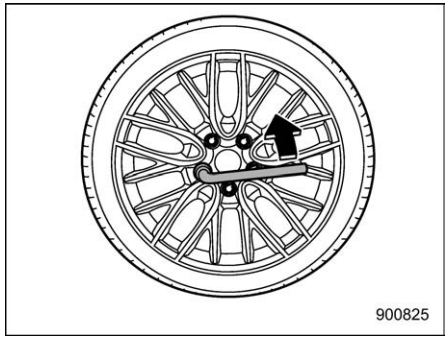

7. Loosen the wheel nuts using the wheel nut wrench but do not remove the nuts.

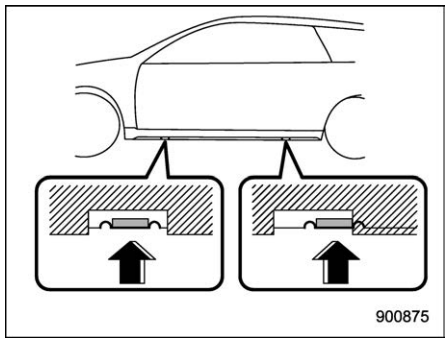

Jack-up points

8. Place the jack under the side sill at the front or rear jack-up point closest to the tire to be replaced.

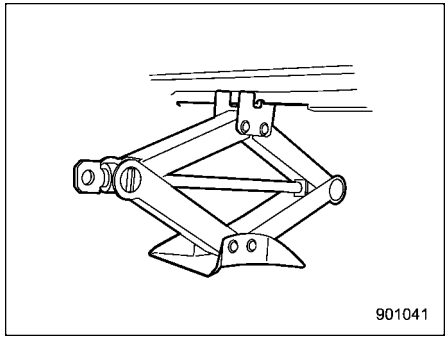

Turn the jackscrew by hand until the jack head engages firmly into the jack-up point.

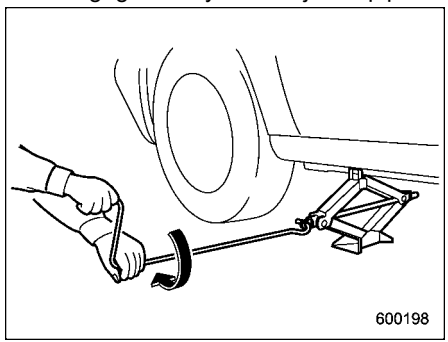

9. Insert the jack handle into the jack-screw, and turn the handle until the tire clears the ground. Do not raise the vehicle higher than necessary.

– CONTINUED –

10. Remove the wheel nuts and the tire to be replaced.

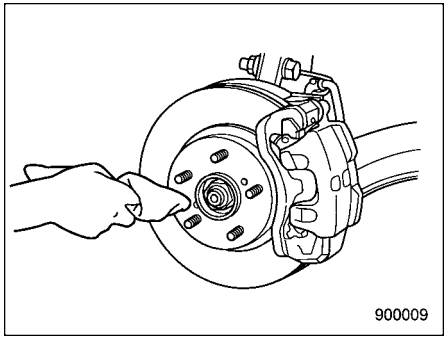

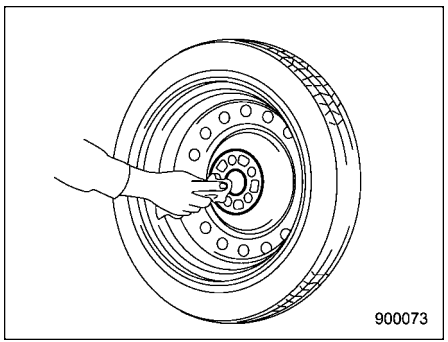

11. Before putting the new tire on, clean the mounting surface of the wheel and hub with a cloth.

12. Put on the new tire. Replace the wheel nuts. Tighten them by hand.

WARNING

Do not use oil or grease on the wheel studs or nuts when the new tire is installed. This could cause the nuts to become loose and lead to an accident.

13. Turn the jack handle counterclockwise to lower the vehicle.

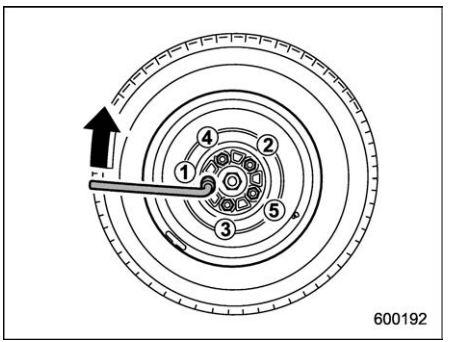

14. Use the wheel nut wrench to securely tighten the wheel nuts to the specified torque, following the tightening order in the illustration.
For the wheel nut tightening torque, refer to “Tires” ☞P495. Never use your foot on the wheel nut wrench or a pipe extension on the wrench because you may exceed the specified torque. Have the wheel nut torque checked at the nearest automotive service facility.

15. Store the jack, jack handle and wheel nut wrench in their storage locations.

WARNING

Never place the tire to be replaced or tire changing tools in the passenger compartment after changing a new tire. In a sudden stop or collisions, loose equipment could strike occupants and cause injury. Store the all tools in the proper place.

■ Wheel Replacement

When replacing wheels due, for example, to damage, make sure the replacement wheels match the specifications of the wheels that are fitted as standard equipment. Replacement wheels are available from SUBARU dealers.

WARNING

Use only those wheels that are specified for your vehicle. Wheels not meeting specifications could interfere with brake caliper opera-

tion and may cause the tires to rub against the wheel well housing during turns. The resulting loss of vehicle control could lead to an accident.

NOTE

When any of the wheels are removed and replaced for tire rotation or to change a flat tire, always check the tightness of the wheel nuts after driving approximately 600 miles (1,000 km). If any nut is loose, tighten it to the specified torque.

■ Wheel Covers (If Equipped)

▼ Removing the wheel cover

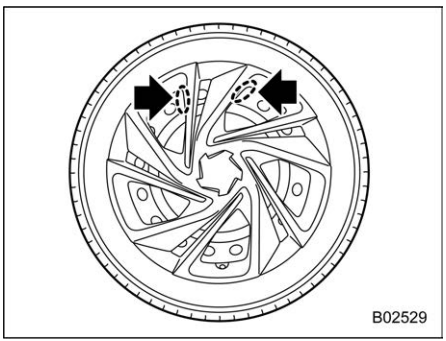

If your vehicle has wheel covers, remove them by holding and pulling the areas indicated in the illustration.

⚠ CAUTION

Use gloves to protect your hands when removing wheel covers.

▼ Installing the wheel cover

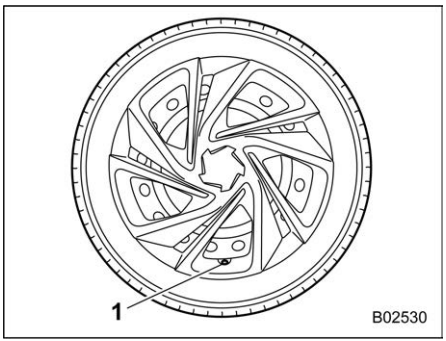

1 Valve hole

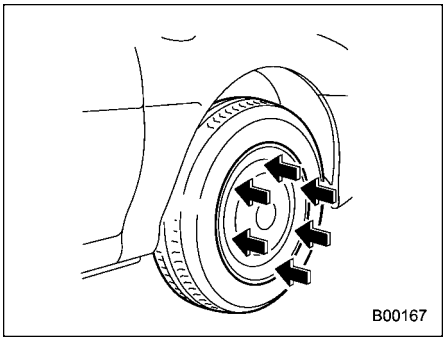

Align the valve with the valve hole in the cover, then fit the cover on the wheel by tapping your hand evenly around the circumference of the cover.

11-17. Alloy Wheels

Alloy wheels can be scratched and damaged easily. Handle them carefully to maintain their appearance, performance, and safety.

- When any of the wheels is removed and replaced for tire rotation or to change a flat, always check the tightness of the wheel nuts after driving approximately 600 miles (1,000 km). If any nut is loose, tighten it to the specified torque.
- Never apply oil to the threaded parts, wheel nuts, or tapered surface of the wheel.
- Never let the wheel rub against sharp protrusions or curbs.
- When wheel nuts, balance weights, or the center cap is replaced, be sure to replace them with genuine SUBARU parts designed for alloy wheels.
- When stacking and storing removed tires, place shock-absorbing material between the tires to protect the wheels from becoming scratched.

11-18. Windshield Washer Fluid

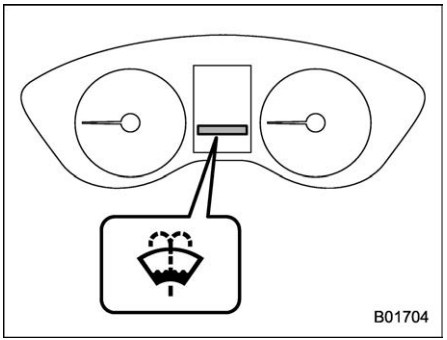

Windshield washer fluid warning light

When there is only a small amount of washer fluid remaining, the windshield washer fluid warning light will appear. When this occurs, refill the washer fluid as follows.

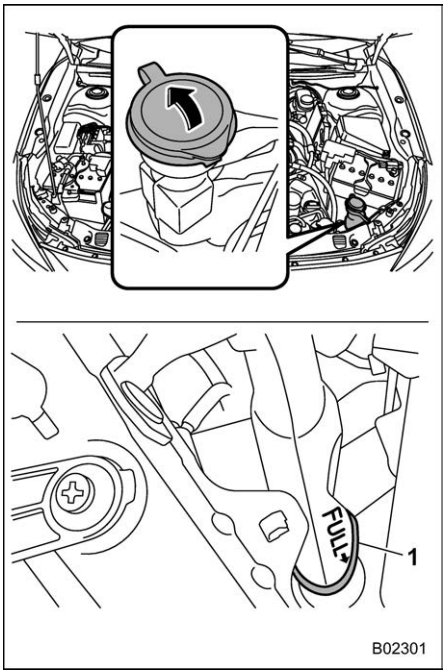

1 “FULL” mark

Remove the washer tank filler cap, then add fluid until it reaches the “FULL” mark on the tank.

Use windshield washer fluid. If windshield washer fluid is unavailable use clean

water.

In areas where water freezes in winter, use an anti-freeze type windshield washer fluid.

CAUTION

Never use engine coolant as washer fluid because it could cause paint damage.

If you fill the windshield washer tank with a fluid with a different concentration from the one used previously, purge the old fluid from the piping between the windshield washer tank and washer nozzles by operating the washer for a certain period of time. Otherwise, if the concentration of the fluid remaining in the piping is too low for the outside temperature, it may freeze and block the nozzles.

CAUTION

- **Adjust the washer fluid concentration appropriately for the outside temperature. If the concentration is inappropriate, sprayed washer fluid may freeze on the windshield and obstruct your view, and the fluid may freeze in the windshield washer tank.**
- **Be careful foreign matter does not contaminate the washer fluid when filling the tank. Contamination could cause malfunctions, such as clogging the pump.**
- **State or local regulations on volatile organic compounds may restrict the use of methanol, a common windshield washer anti-freeze additive. Washer fluids containing non-methanol anti-freeze agents should be used only if they provide cold weather protection without damaging your vehicle's paint, wiper blades or washer system.**

11-19. Replacement of Wiper Blades

Grease, wax, insects, or other material on the windshield or the wiper blade results in jerky wiper operation and streaking on the glass. If you cannot remove the streaks after operating the windshield washer or if the wiper operation is jerky, clean the outer surface of the windshield and rear window using a sponge or soft cloth with a neutral detergent or mild-abrasive cleaner. Do not, however, use detergent to clean the blade rubbers. Use only a sponge or soft cloth (and no neutral detergent or mild abrasive cleaner) when you clean the blade rubbers. If you wipe the rubber of the blade strongly, the black coating component will peel off, which will cause the wiper to judder. Also, after wiping it off, check that the rubber has not come loose. After cleaning the window glass and wiper blade rubbers, be sure to rinse them with clean water. Rinse the window until the water does not form beads on the glass. This indicates that the glass is clean.

CAUTION

- **Do not clean the wiper blades with gasoline or a solvent, such as paint thinner or benzine. This**

– CONTINUED –

will cause deterioration of the wiper blades.

- **When you wish to raise the passenger-side wiper arm, first raise the driver-side wiper arm. Otherwise, the passenger-side wiper assembly and driver-side wiper assembly will touch each other, possibly resulting in scratches.**
- **Return the passenger-side wiper arm to its original position before returning the driver-side wiper arm to its original position. Otherwise, the passenger-side wiper assembly and driver-side wiper assembly will touch each other, possibly resulting in scratches.**
- **When returning the raised wipers to the original positions, return the wipers slowly on the windshield by hand. Returning the wipers from the detached positions by the spring operation might change the shape of the wiper arm or scratch the windshield.**
- **While removing the wiper blades from the wiper arms, do not return the wiper arms to the original positions. Otherwise, the windshield surface may be scratched.**

If you cannot eliminate the streaking even after following this method, replace the wiper blades using the following procedures.

■ Windshield Wiper Blade Assembly

NOTE

Do not lower the wiper arm while the wiper blade assembly is removed.

1. Raise the wiper arm off the windshield. First raise the driver's side wiper arm and then raise the front passenger's side wiper arm.

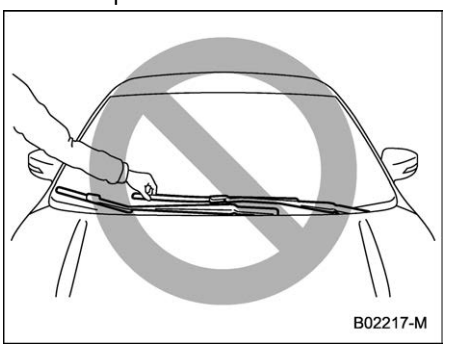

CAUTION

Hold the wiper arm when replacing the wiper blade. Holding the wiper blade, may result in blade deformation.

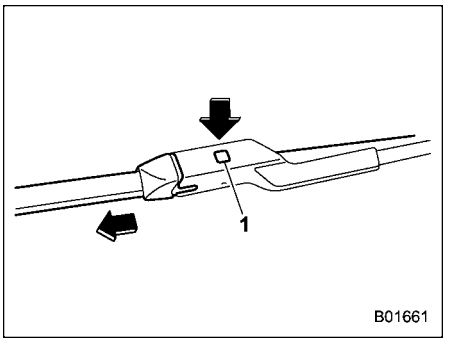

1 Lock knob

2. Hold the wiper blade connection by hand, push the lock knob to release the lock, and then pull out the wiper blade assembly.

NOTE

Do not use a hard object to push the lock knob. The lock knob may be scratched.

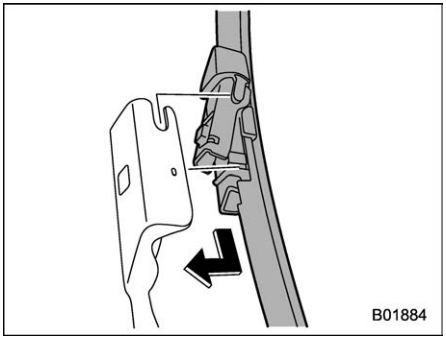

3. When installing the wiper blade assembly, align it with the wiper arm connection part and then slide it in the opposite direction of removal to install. After installing the wiper blade assembly, check that the connection part is locked completely.
4. Hold the wiper arm by hand and slowly lower it in position.

■ Window Wiper Blade Rubber

Replace the wiper blade rubber according to the following procedure.

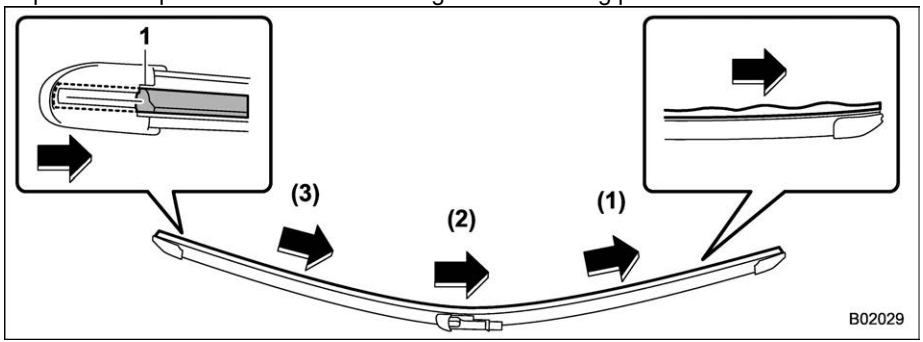

1 Slit

1. Pull the wiper blade rubber from the right side in the order of (1), (2) and (3) until the slit on the wiper blade can be seen position.

– CONTINUED –

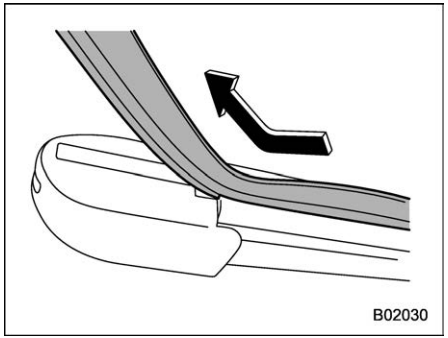

2. Pull the end of the wiper blade rubber through the slit to remove it.

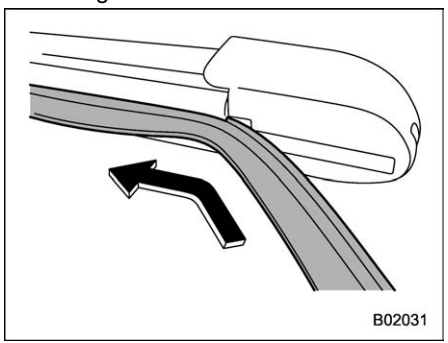

3. Insert a new wiper blade rubber into the slit. Do not insert the wiper blade rubber into the wrong slit.

Rear Window Wiper Blade Assembly

1. Raise the wiper arm off the rear window.

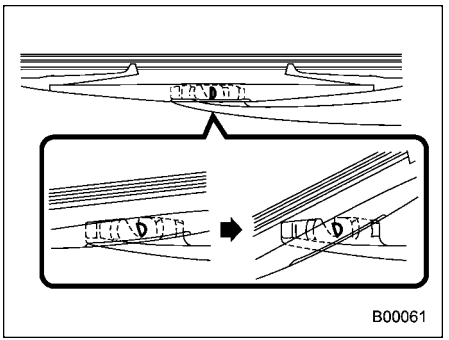

2. Turn the wiper blade assembly counterclockwise.

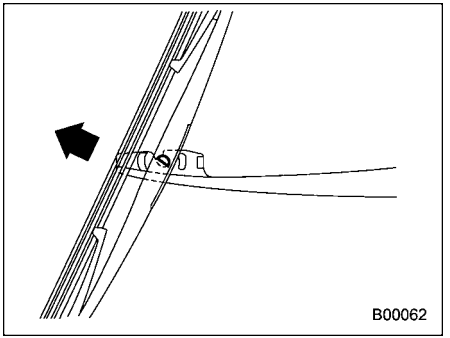

3. Pull the wiper blade assembly toward you to remove it from the wiper arm.

Rear Window Wiper Blade Rubber

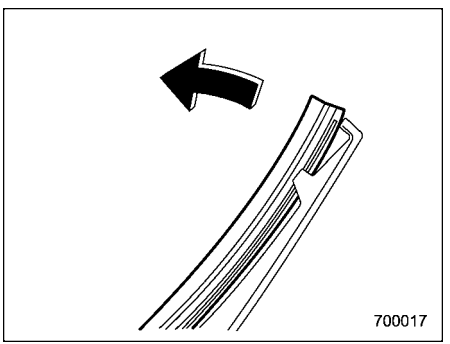

1. Pull out the end of the blade rubber assembly to unlock it from the plastic support.

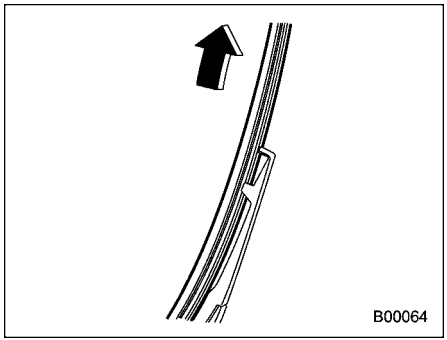

2. Pull the blade rubber assembly out of the plastic support.

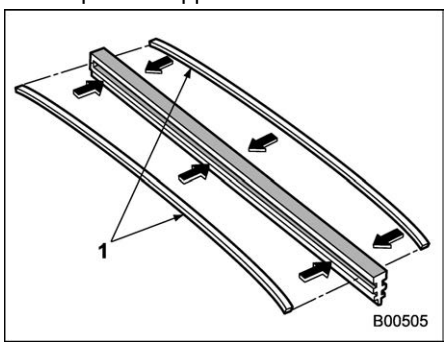

1 Metal spines

3. If the new blade rubber is not provided with two metal spines, remove the metal spines from the old blade rubber and install them in the new blade rubber.

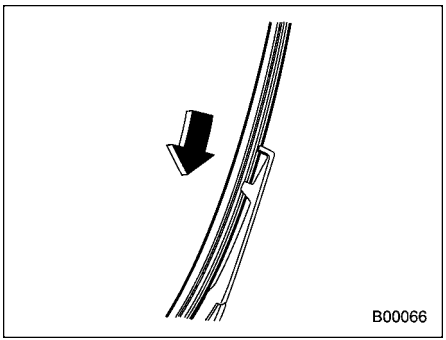

4. Align the claws of the plastic support with the grooves in the blade rubber assembly, then slide the blade rubber assembly into place.

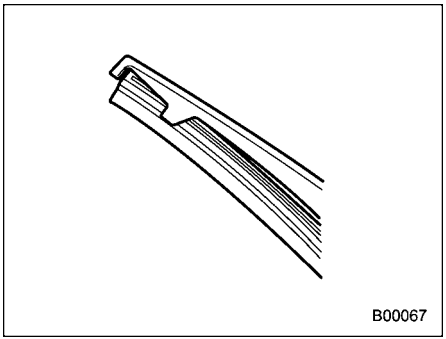

Securely retain both ends of the rubber with the stoppers on the plastic support ends. If the rubber is not retained properly, the wiper may scratch the rear window glass.

5. Install the wiper blade assembly to the wiper arm. Make sure that it locks in place.
6. Hold the wiper arm by hand and slowly lower it in position.

11-20. Battery

WARNING

- **Before beginning work on or near any battery, be sure to extinguish all cigarettes, matches, and lighters. Never expose a battery to an open flame or electric sparks. Batteries give off a gas which is highly flammable and explosive.**
- **For safety, in case an explosion does occur, wear eye protection or shield your eyes when working near any battery. Never lean over a battery.**
- **Do not let battery fluid contact eyes, skin, fabrics, or paint because battery fluid is a corrosive acid. If battery fluid gets on your skin or in your eyes, immediately flush the area with water thoroughly. Seek medical help immediately if acid has entered the eyes.**

  If battery fluid is accidentally swallowed, immediately drink a large amount of milk or water, and seek medical attention immediately.
- **To lessen the risk of sparks, remove rings, metal watchbands, and other metal jewelry. Never allow metal tools to contact the positive battery terminal and anything connected to it WHILE you are at the same time in contact with any other metallic portion of the vehicle because a short circuit will result.**
- **Keep everyone including children away from the battery.**
- **Charge the battery in a well-ventilated area.**
- **Battery posts, terminals, and related accessories contain lead and lead compounds, chemicals known to the State of California to cause cancer and reproductive harm. Batteries also contain other chemicals known to the State of California to cause cancer. Wash hands after handling.**

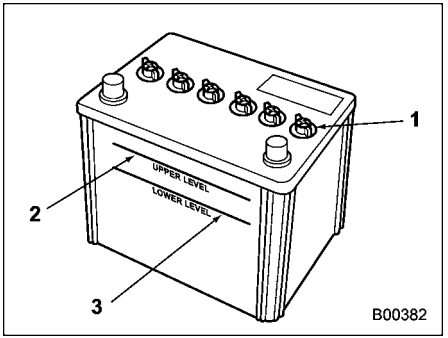

1 Cap
2 Upper level
3 Lower level

It is unnecessary to periodically check the battery fluid level or periodically refill with distilled water.

However, if the battery fluid level is below the lower level, remove the cap. Fill to the upper level with distilled water. Refer to “Electrical System” ☞P495.

For “SUBARU STARLINK Safety and Security” without navigation system:

When the vehicle battery is discharged or replaced, certain internal settings can be restored only by pairing the vehicle to a smartphone via Bluetooth, or by visiting a SUBARU dealer. Until those internal settings are restored, certain convenience features, including the “Service Appoint-

ment Scheduler," may be unavailable.

CAUTION

Never use more than 10 amperes when charging the battery because it will shorten battery life.

NOTE

To avoid battery drain, do not use electric power (e.g., lights, wipers, climate control, seat heaters, etc.) for longer than necessary when the engine is off. If using the radio, room lights or other electrical equipment with the engine off, even in the ignition switch is in the "ACC" position, the battery will drain.

11-21. Fuses

CAUTION

Never replace a fuse with one having a higher rating or with material other than a fuse because serious damage or a fire could result.

NOTE

Fuse rating and used circuit are described on behind each fuse box cover.

The fuses are designed to melt during an overload to prevent damage to the wiring harness and electrical equipment. The fuses are located in two fuse boxes.

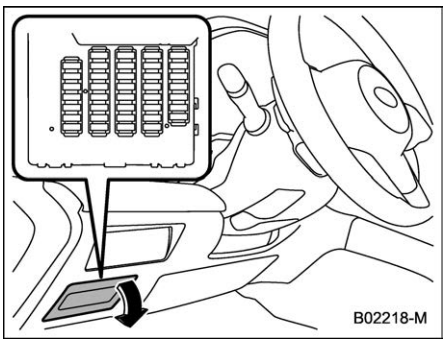

One is located under the instrument panel behind the fuse box cover on the driver's seat side. To remove the cover, pull it out.

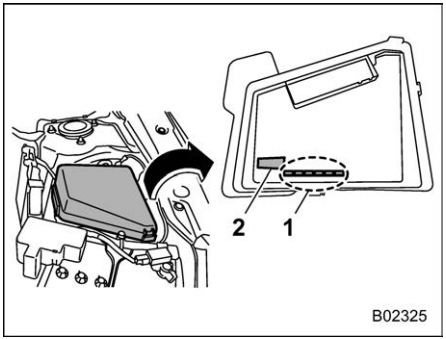

1 Spare fuses
2 Fuse puller

The other one (main fuse box) is housed in the engine compartment. Also, the spare fuses and fuse puller are stored in the fuse box cover.

Pinch the upper part of the fuse puller when removing it from the main fuse box.

– CONTINUED –

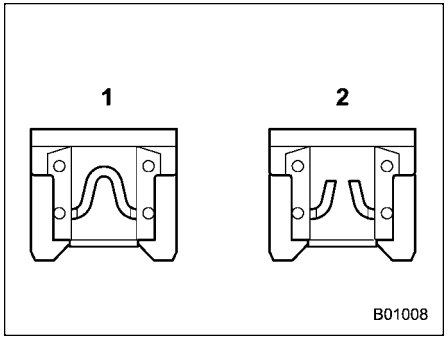

1 Good
2 Blown

If any lights, accessories or other electrical controls do not operate, inspect the corresponding fuse. If a fuse has blown, replace it.

1. Turn the ignition switch to the “LOCK”/ “OFF” position and turn off all electrical accessories.
2. Remove the fuse box cover.
3. Determine which fuse may be blown. Look at the back side of each fuse box cover.

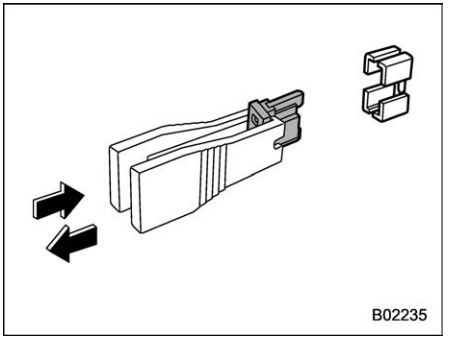

4. Pull out the fuse with the fuse puller.
5. Inspect the fuse. If it has blown, replace it with a spare fuse of the same rating.
6. If the same fuse blows again, this indicates that its system has a problem. Contact your SUBARU dealer for repairs.

11-22. Installation of Accessories

Always consult your SUBARU dealer before installing fog lights or any other electrical equipment in your vehicle. Such accessories may cause the electronic system to malfunction if they are incorrectly installed or if they are not suited for the vehicle. We recommend that you install only genuine SUBARU accessories on your vehicle.

11-23. Replacing Bulbs

WARNING

Bulbs may become very hot while illuminated. Before replacing bulbs, turn off the lights and wait until the bulbs cool down, Otherwise, there is the risk of sustaining a burn injury.

CAUTION

Replace any bulb only with a new bulb of the specified wattage. Using a bulb of different wattage could result in a fire. For the specified wattage of each bulb, refer to "Bulb Chart" ☞P497. For replacement, we recommend that you contact your SUBARU dealer.

Do not touch the glass portion of the light bulb with bare hands. When holding the glass portion is unavoidable, hold it with a clean dry cloth to avoid getting moisture and grease on the bulb. If there are any fingerprints or grease on the bulb surface, wipe them away with a soft cloth moistened with alcohol. Also, if the bulb is scratched or dropped, it may blow out or crack.

■ Headlights

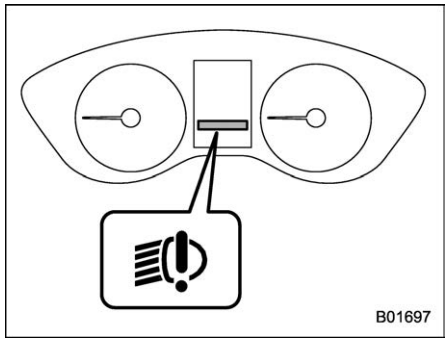

LED headlight warning light

The LED headlight warning light illuminates if the LED headlights malfunction.

We recommend that you have your vehicle inspected at a SUBARU dealer as soon as possible.

■ Front Turn Signal Light, Position Light and Front Side Marker Light (If Equipped)

It may be difficult to replace the bulbs. We recommend that you have the bulbs replaced by your SUBARU dealer if necessary.

■ Rear Combination Lights

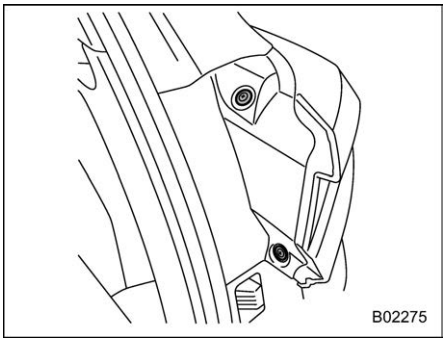

1. Use a screwdriver to remove the secured clips of the covers.

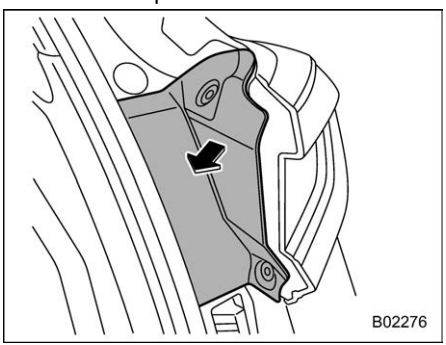

2. Remove the side cover.

– CONTINUED –

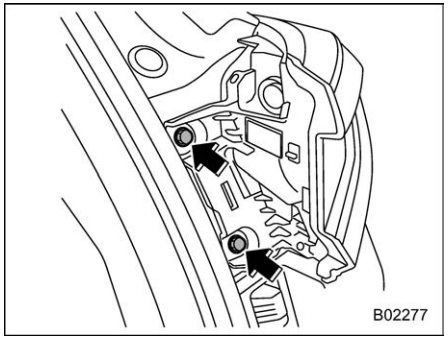

3. Remove the upper and lower screws.

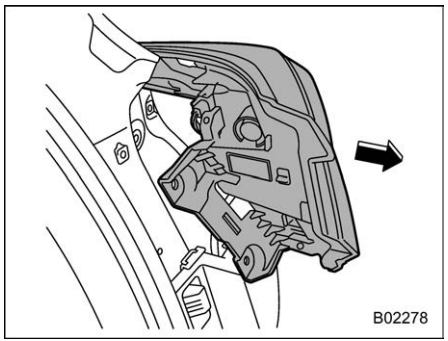

4. Slide the rear combination light assembly rearward to remove it from the vehicle.

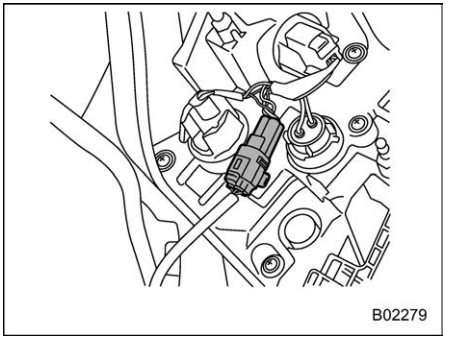

5. Disconnect the electrical connector.

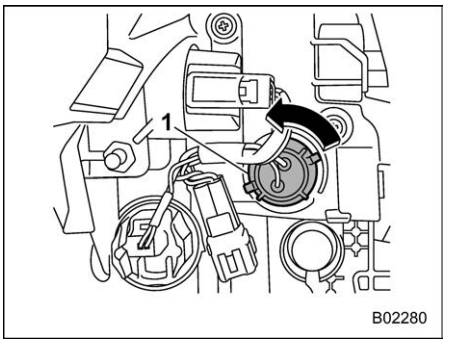

1 Rear turn signal light

6. Remove the bulb holder from the rear combination light assembly by turning it counterclockwise.
7. Pull the bulb out of the bulb holder and replace it with a new one.
8. Set the bulb holder into the rear combination light assembly and turn it clockwise until it locks.
9. Reconnect the electrical connector.

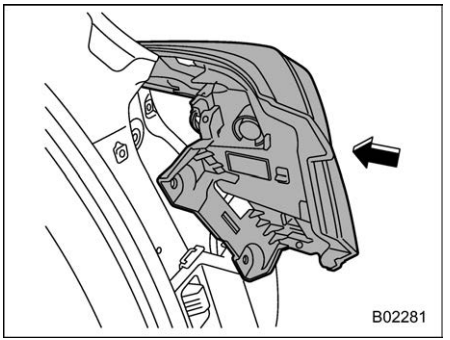

10. Reinstall the rear combination light assembly by sliding the two-pronged part of the combination light assembly securely to each holder of the vehicle side.

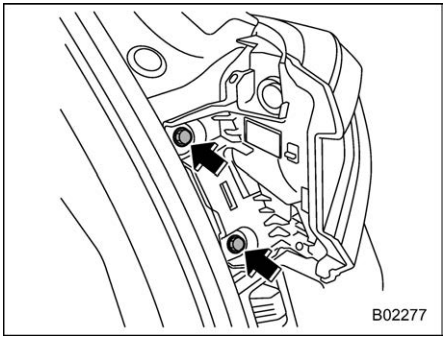

11. Tighten the upper and lower screws.
12. Reinstall the side cover.

■ Back-Up Light

NOTE

It may be difficult to replace the bulbs. We recommend that you have the bulbs replaced by your SUBARU dealer if necessary.

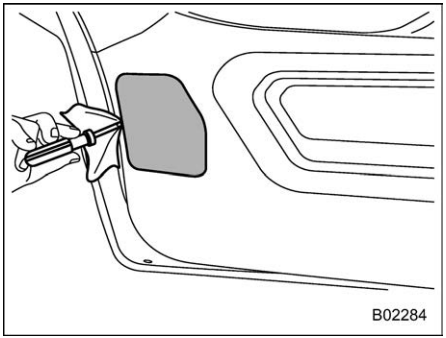

1. Cover the tip of a flat-head screwdriver with vinyl tape or cloth so that it will not scratch. Apply a flat-head screwdriver to the light cover as shown in the illustration, and pry the light cover off from the rear gate trim.

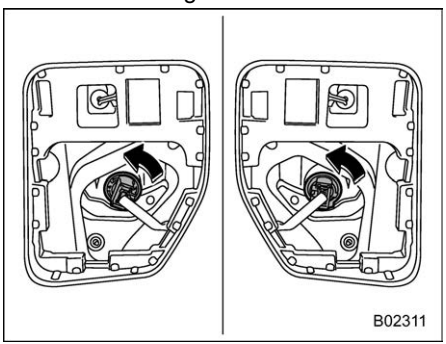

2. Turn the bulb socket counterclockwise and remove it.

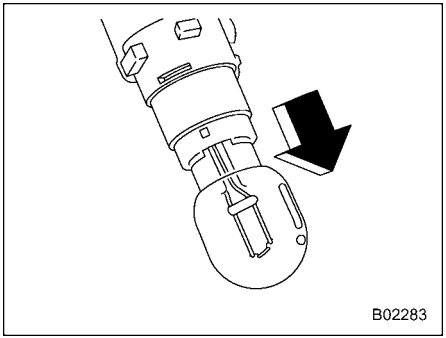

3. Pull the bulb out of the bulb socket and replace it with a new one.
4. Install the bulb socket by turning it clockwise.
5. Install the light cover on the rear gate.

– CONTINUED –

License Plate Light

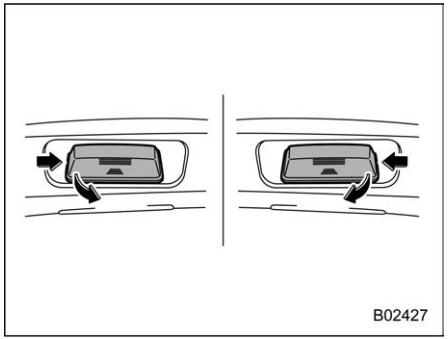

1. License plate light must be pushed inwards, then pulled out to be removed.

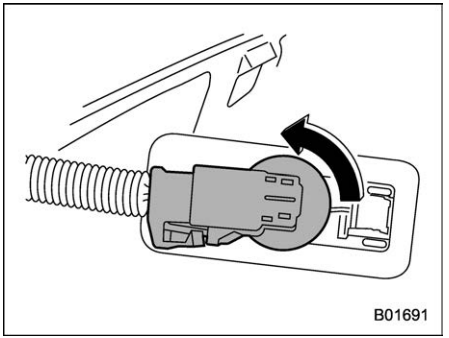

2. Turn the bulb socket counterclockwise and pull out the socket.
3. Pull the bulb out of the socket.
4. Install a new bulb.
5. Reinstall the bulb socket and the license plate light cover.

Other Bulbs

It may be difficult to replace the bulbs. We recommend that you have the bulbs replaced by your SUBARU dealer if necessary.

Adjusting Headlight Aim

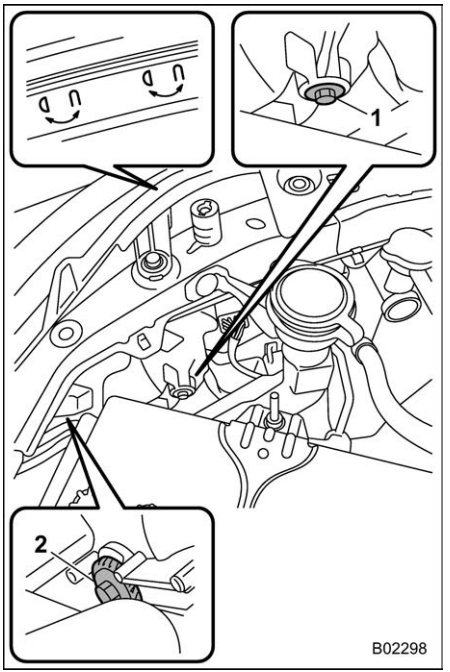

1 Adjustment screw A
2 Adjustment screw B

▼ **Before checking the headlight aiming**

1. Make sure the vehicle has a full tank of gasoline and the area around the headlight is not deformed.
2. Park the vehicle on level ground.
3. Sit in the driver's seat.
4. Bounce the vehicle several times.

▼ **Headlight aim adjustment**

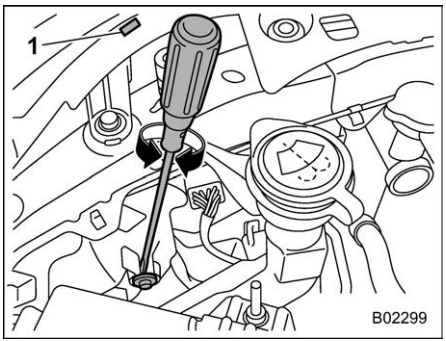

1 Adjustment direction mark

1. Turn the screw A clockwise or counterclockwise to adjust it.
   Remember the direction of the rotation and number of rotations.

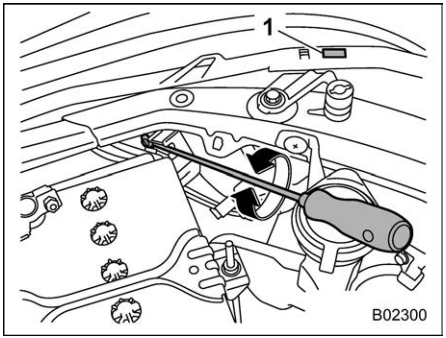

1 Adjustment direction mark

2. Turn screw B the same number of turns and in the same direction as step 2.

NOTE

- **If the headlight aim cannot be adjusted, contact your SUBARU dealer.**
- **To inspect of the headlight aim position, consult a SUBARU dealer.**

11-24. Replacing Battery

The access key fob/transmitter battery may be discharged under the following conditions.

- The operation of the keyless access function is unstable.
- The operating distance of the remote keyless entry system is unstable.
- The transmitter does not operate properly when used within the standard distance.

Replace the battery with a new one.

⚠ CAUTION

- **Do not let dust, oil or water get on or in the access key fob/transmitter when replacing battery.**
- **Be careful not to damage the printed circuit board in the access key fob/transmitter when replacing the battery.**
- **Be careful not to allow children to touch the battery and any removed parts; children could swallow them.**
- **There is a danger of an explosion if the battery is incorrectly replaced. Replace only with the**

– CONTINUED –

same or equivalent type of the battery.

- Batteries shall not be exposed to excessive heat such as bright sunlight, fire or the like.

NOTE

- Replace only with the same or equivalent type of battery recommended by the manufacturer.
- Dispose of used batteries according to the local laws.
- Mount the battery in the correct orientation to prevent fluid leakage. Be careful not to bend the terminals. It may result in a malfunction.
- It is recommended that the battery should be replaced by a SUBARU dealer.
- Use a new battery.
- After replacing the battery, confirm that the access key fob/transmitter functions properly.

■ Replacing Battery of Access Key Fob

CAUTION

- When removing or fitting the access key fob cover, make sure that the plastic part does not come off or become misaligned.
- Before replacing the battery, remove any static electricity.

Battery: Button battery CR2032 or equivalent

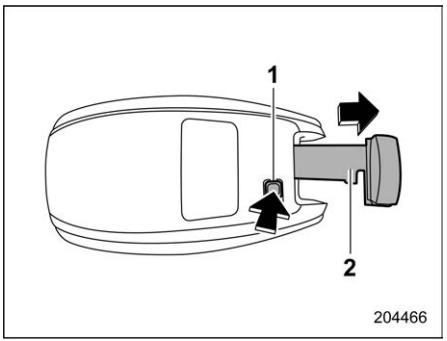

1 Release button
2 Emergency key

1. Take out the emergency key.

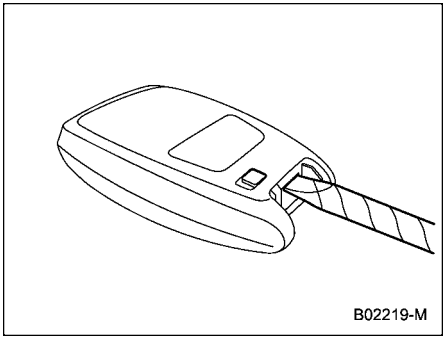

2. Wrap a flat-head screwdriver with vinyl tape or a cloth, and insert it in the gap to remove the cover.

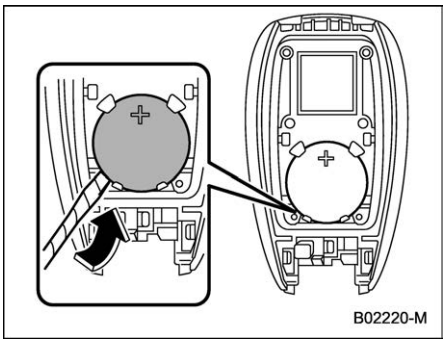

3. Take out the battery using a flat-head screwdriver with vinyl tape or a cloth.

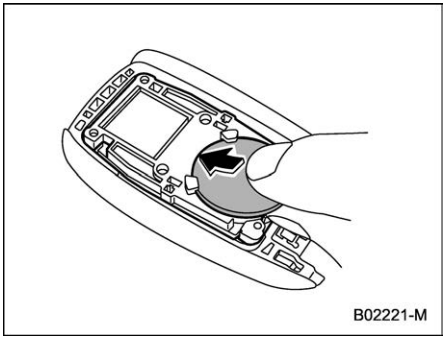

4. Insert a new battery with its positive (+) side facing upward as shown in the figure.

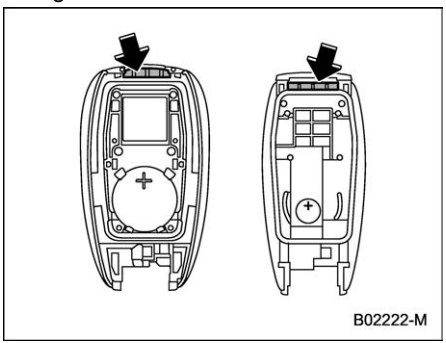

5. Attach the cover to the access key fob by fitting the projections and recesses together.

■ Replacing Battery of Transmitter

⚠ CAUTION

Before replacing the battery, remove any static electricity.

Battery: Button battery CR2025 or equivalent

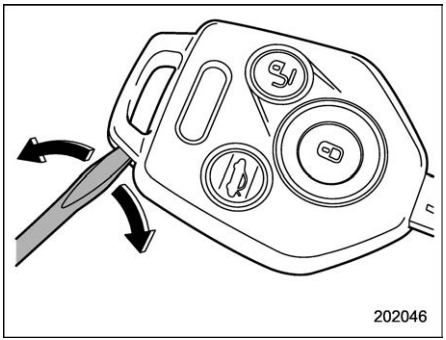

1. Open the key head using a flat-head screwdriver.

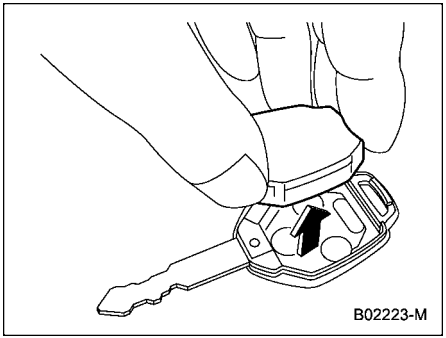

2. Remove the transmitter case from the key head.

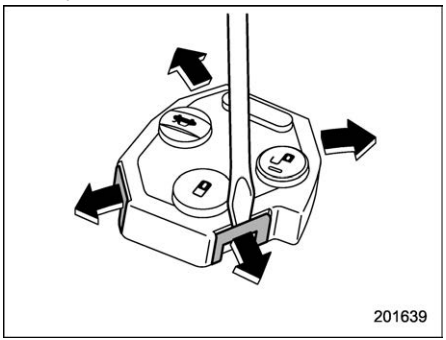

3. Open the transmitter case by releasing the hooks.

– CONTINUED –

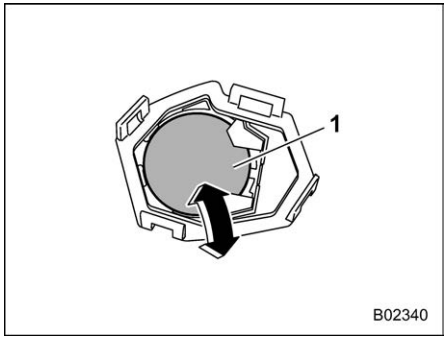

1 Negative (−) side facing up

4. Replace the old battery with a new battery (type **CR2025** or equivalent) making sure to install the new battery with the negative (−) side facing up.
5. Put together the transmitter case by fitting the hooks on the case.
6. Reinstall the transmitter case in the key head.
7. Refit the removed half of the key head.

After the battery is replaced, the transmitter must be synchronized with the remote keyless entry system's control unit. Press either the "🔒" or "🔓" button six times to synchronize the unit.

12-1. Specifications 490
Dimensions 490
Engine 491
Fuel 491
Engine Oil 492
Front Differential and Rear Differential Gear Oil ... 494
Fluids 494
Engine Coolant 495
Electrical System 495
Tires 495
Brake Disc 496
12-2. Bulb Chart 497
Safety Precautions 497
Bulb Chart 498
12-3. Vehicle Identification 500
12-4. Function Settings 501
Function Settings and Adjustments on the Center Information Display 501
Individual Settings and Adjustments Excluding Center Information Display 501
Function Settings and Adjustments Performed by a Dealer 501

12-1. Specifications

These specifications are subject to change without notice.

■ Dimensions

in (mm)

Item		
Overall length		176.2 (4,475)
Overall width		70.1 (1,780)
Overall height		58.3 (1,480)
Wheel base		105.1 (2,670)
Tread	Front	60.6 (1,540)
	Rear	60.8 (1,545)
Ground clearance*1		5.1 (130)

*1: Measured with vehicle empty

■ Engine

Engine model	FB20 (2.0 L, DOHC, non-turbo)	FB25 (2.5 L, DOHC, non-turbo)
Engine type	Horizontally opposed, liquid cooled 4 cylinder, 4 stroke direct injection gasoline engine	Horizontally opposed, liquid cooled 4 cylinder, 4-stroke direct injection gasoline engine
Displacement cu-in (cc)	122 (1,995)	152 (2,498)
Bore × Stroke in (mm)	3.31 × 3.54 (84.0 × 90.0)	3.70 × 3.54 (94.0 × 90.0)
Compression ratio	12.5	12.0
Firing order	1 – 3 – 2 – 4	1 – 3 – 2 – 4

■ Fuel

Fuel requirement	Fuel tank capacity
Unleaded gasoline with 87 AKI (90 RON) or higher	16.6 US gal (63 liters, 13.9 Imp gal)

For more details, refer to “Fuel” ☞P305.

– CONTINUED –

■ Engine Oil

For the checking, adding and replacing procedure or other details, refer to “Engine Oil” ☞P451.

NOTE

Have the procedure for changing the engine oil and oil filter performed by a properly-trained expert. It is recommended that you have this service performed by your SUBARU dealer.

▼ Approved engine oil

Always use the SUBARU approved engine oil. For further details, please contact your SUBARU dealer.
If the approved engine oil is unavailable, use the alternative engine oil described in the following.

▼ Alternative engine oil

If the SUBARU approved oil is unavailable, the following alternative oil can be used.

NOTE

- **Each quantity indicated here is only a guideline. The necessary quantity for replacement may differ slightly depending on the temperature and other factors.**
- **In choosing an oil, you want the proper quality and viscosity, as well as one that will enhance fuel economy. Oils of lower viscosity provide better fuel economy. However, in hot weather, oil of higher viscosity is required to properly lubricate the engine. The following table lists the recommended viscosities and applicable temperatures.**
- **When adding oil, you may use different brands together as long as they are the same ILSAC or API classification and SAE viscosity as those recommended by SUBARU.**

Oil grade	SAE viscosity No. and applicable temperature	Engine oil capacity
ILSAC (International Lubricant Specification Advisory Committee) **GF-6B**, which can be identified with the ILSAC certification mark (Shield mark)	**0W-16 synthetic** oil is the required oil for optimum engine performance and protection. Conventional oil may be used if synthetic oil is unavailable. *: If 0W-16 synthetic oil is not available, 0W-20 conventional oil may be used if replenishment is needed but should be changed to 0W-16 synthetic oil at the next oil change. 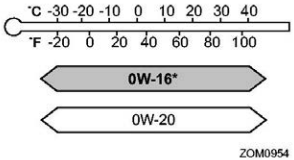	· Adding the oil from L to F level: 1.1 US qt (1.0 liters, 0.9 Imp qt) · Changing the oil and oil filter: 4.7 US qt (4.4 liters, 3.9 Imp qt) · Changing the oil: 4.4 US qt (4.2 liters, 3.7 Imp qt)
ILSAC (International Lubricant Specification Advisory Committee) **GF-6A**, which can be identified with the ILSAC certification mark (Starburst mark)		
API (American Petroleum Institute) classification **SP** with the words “RESOURCE CONSERVING”		

– CONTINUED –

■ Front Differential and Rear Differential Gear Oil

Oil	Front differential gear oil	Rear differential gear oil
Oil grade	● SUBARU Extra MT*3 ● API classification GL-5 (75W-90)	API classification GL-5 (75W-90)
Oil capacity*1	1.4 US qt (1.3 liters, 1.1 Imp qt)	0.8 US qt (0.8 liters, 0.7 Imp qt)
Remarks*2	"Front Differential Gear Oil and Rear Differential Gear Oil" ☞P458	

*1: The indicated oil quantity is only a guideline. The necessary quantity for replacement may differ slightly depending on the temperature and other factors. Check the oil level after refilling the gearbox with oil.
*2: For more details about maintenance and service, refer to the indicated section.
*3: The vehicle is filled at the factory with this oil.

■ Fluids

Fluid	Fluid type*1	Fluid capacity*2	Remarks*3
Continuously variable transmission fluid	Consult your SUBARU dealer.	2.0 L engine models: 10.8 US qt (10.2 liters, 9.0 Imp qt) 2.5 L engine models: 12.0 US qt (11.3 liters, 10.0 Imp qt)	"Continuously Variable Transmission Fluid" ☞P457
Brake fluid	FMVSS No. 116, DOT 3 or DOT 4 brake fluid	—	"Brake Fluid" ☞P458

*1: Use one of the indicated types of fluid.
*2: The indicated fluid quantity is only a guideline. The necessary quantity for replacement may differ slightly depending on the temperature and other factors.
*3: For more details about maintenance and service, refer to the indicated section.

■ Engine Coolant

Coolant capacity		Coolant type
2.0 L engine models	8.4 US qt (7.9 liters, 7.0 Imp qt)	SUBARU SUPER COOLANT
2.5 L engine models	8.9 US qt (8.4 liters, 7.4 Imp qt)	

The indicated coolant quantity is only a guideline. The necessary quantity for replacement may differ slightly depending on the temperature and other factors. For more details about maintenance and service, refer to “Cooling System” ☞P453.

■ Electrical System

Battery type		Q-85
Alternator	2.0 L engine models	12 V 130 A
	2.5 L engine models	12 V 150 A
Spark plugs		DILKAR7Q8 (NGK)

■ Tires

Tire size		205/55R16 91V	205/50R17 89V	P225/40R18 88V
Wheel size		16 × 6 1/2 J	17 × 7 J	18 × 7 1/2 J
Pressure	Front	36 psi (250 kPa, 2.5 kgf/cm^2)	33 psi (230 kPa, 2.3 kgf/cm^2)	
	Rear	35 psi (240 kPa, 2.4 kgf/cm^2)	32 psi (220 kPa, 2.2 kgf/cm^2)	
Wheel nut tightening torque		89 lbf·ft (120 N·m, 12 kgf·m)*1		

*1: This torque is equivalent to applying approximately 88 to 110 lbf (40 to 50 kgf) at the end of the wheel nut wrench. If you have tightened the wheel nuts by yourself, have the tightening torque checked at the nearest automotive service facility as soon as possible. For the wheel nut tightening procedure, refer to “Replacement procedure” ☞P468.

– CONTINUED –

■ Brake Disc

If you need information on the usage limit value of brake discs and the method for measuring them, we recommend that you consult your SUBARU dealer.

12-2. Bulb Chart

■ Safety Precautions

WARNING

Bulbs may become very hot while illuminated. Before replacing bulbs, turn off the lights and wait until the bulbs cool down. Otherwise, there is a risk of sustaining a burn injury.

CAUTION

Replace any bulb only with a new bulb of the specified wattage. Using a bulb of different wattage could result in a fire.

– CONTINUED –

■ Bulb Chart

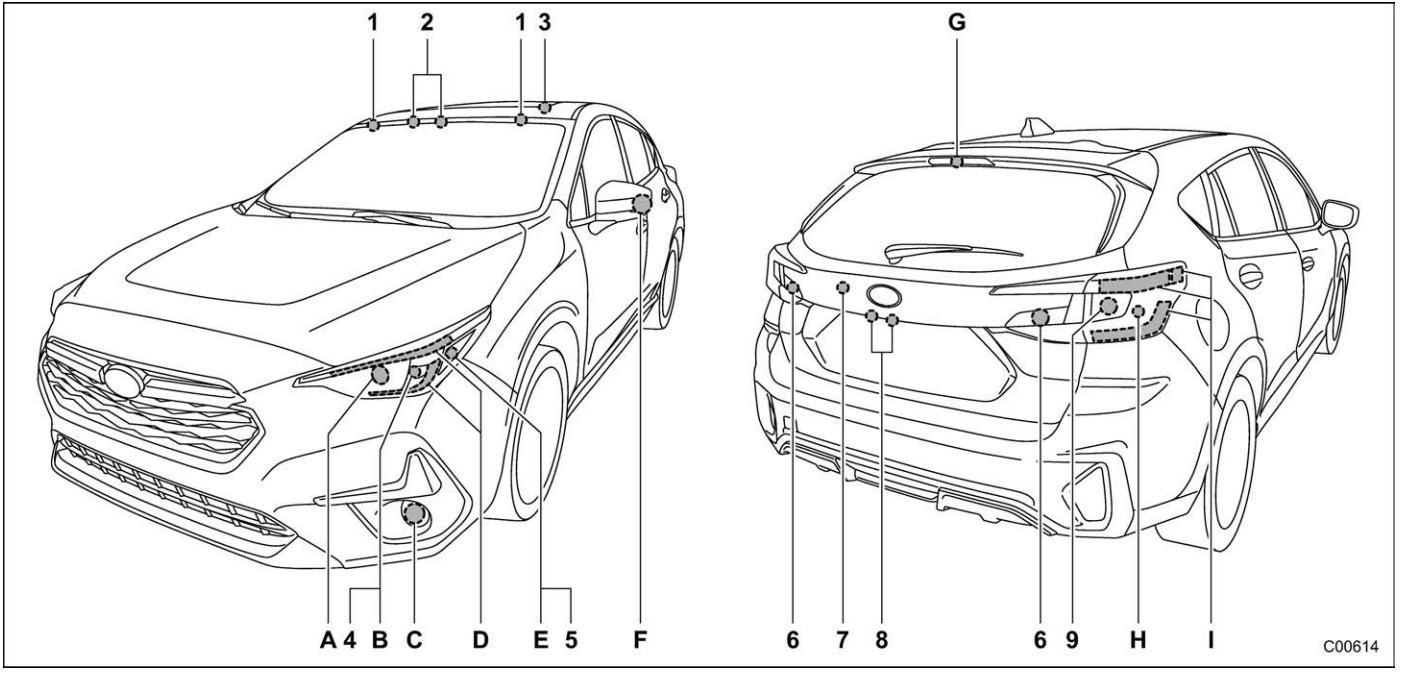

NOTE

Lights indicated by letters are the LED (Light Emitting Diode) type. Consult your SUBARU dealer for replacement.

		Wattage	Bulb No.
1	Vanity mirror lights (if equipped)	12 V-2 W	—
2	Map lights	12 V-8 W	—
3	Dome light	12 V-8 W	—
4	Front position lights (if equipped)	12 V-28 W/8 W	7444NA
	Front turn signal lights (if equipped)	12 V-28 W/8 W	7444NA
5	Front side marker light (if equipped)	12 V-5 W	W5W
6	Backup light	12 V-16 W	W16W
7	Cargo area light	12 V-5 W	W5W
8	License plate lights	12 V-5 W	W5W
9	Rear turn signal lights	12 V-21 W	WY21W
A	Low and high beam headlights	—	—
	Daytime running lights	—	—
B	Front turn signal lights (if equipped)	—	—
C	Front fog lights (if equipped)	—	—
D	Front position lights (if equipped)	—	—
	Accessory lights (if equipped)	—	—
E	Front side marker lights (if equipped)	—	—
F	Side turn signal lights (if equipped)	—	—
G	High-mounted stop light	—	—
H	Stop lights	—	—
I	Tail and stop lights	—	—
	Rear side marker lights	—	—

12-3. Vehicle Identification

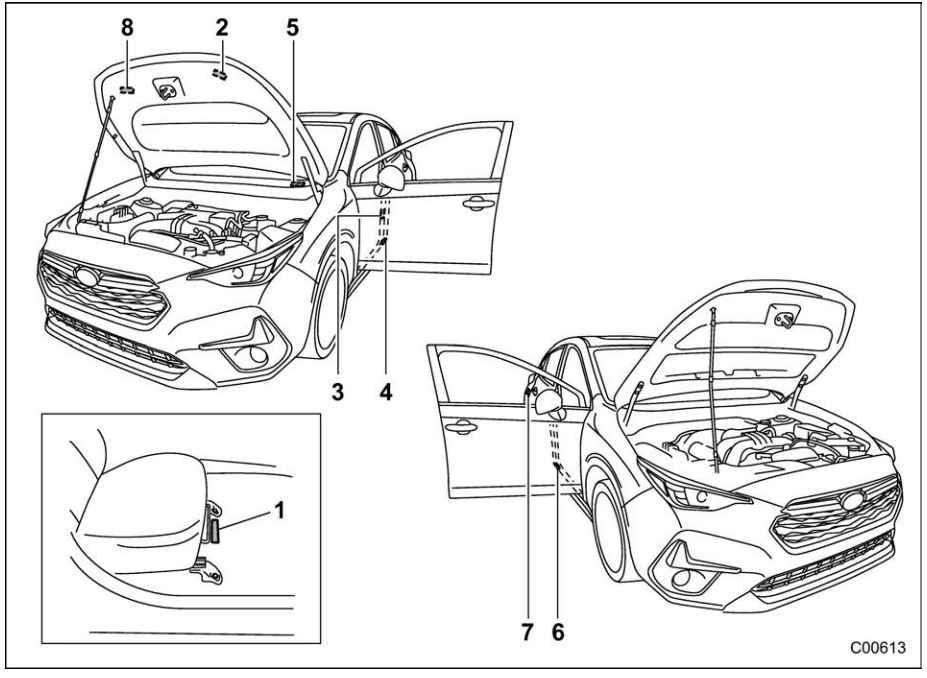

1 Vehicle identification number (under the floor carpet of the right-hand front seat)
2 Emission control label
3 Tire inflation pressure label (vehicle placard)
4 Certification label
5 Vehicle identification number
6 Model number label
7 Fuel label
8 Air conditioner label

12-4. Function Settings

■ Function Settings and Adjustments on the Center Information Display

Setting adjustments can be manually changed within the center information display to meet your personal requirements. Refer to “Center Information Display (CID)” ☞P186.

■ Individual Settings and Adjustments Excluding Center Information Display

For setting adjustments to the following items, refer to the appropriate page for details.

Item	Function	Available settings	Factory default setting	Page
Alarm system	Alarm system	Operation/Non-operation	Operation	133
Remote keyless entry system	Audible signal	Operation/Non-operation	Operation	124

■ Function Settings and Adjustments Performed by a Dealer

Item	Function	Available settings	Factory default setting
Alarm system	Monitoring start delay time (after closing doors)	0 seconds/30 seconds	30 seconds
	Map lights/Dome light/Cargo area light illumination	ON/OFF	OFF
Keyless access with push-button	Audible signal volume*1	Level 1 to 7	Level 6
Remote keyless entry system	Audible signal volume*1	Level 1 to 7	Level 6
Key lock-in prevention	Key lock-in prevention	Operation/Non-operation	Operation
Auto dimmer cancel	Sensitivity of the operation of the auto dimmer cancel	OFF/Min/Low/Mid/Hi/Max	Mid
High beam assist function	High beam assist function	Operation/Non-operation	Operation

– CONTINUED –

Item	Function	Available settings	Factory default setting
Reverse gear interlocked rear wiper	Reverse gear interlocked rear wiper operation	Operation/Non-operation	U.S.-spec. models: Non-operation Other models: Operation

*1: The audible signal volume cannot be set under level 5 for the warning chime.

Consumer Information and Reporting Safety Defects

13-1. For U.S.A. 504
13-2. Tire Information 504
Tire Labeling 504
Recommended Tire Inflation Pressure 506
Glossary of Tire Terminology 507
Tire Care – Maintenance and Safety Practices 512
Vehicle Load Limit – How to Determine 512
Determining Compatibility of Tire and Vehicle Load Capacities 515
Adverse Safety Consequences of Overloading on Handling and Stopping and on Tires 516
Steps for Determining Correct Load Limit 516
13-3. Uniform Tire Quality Grading Standards 517
TREADWEAR 517
TRACTION AA, A, B, C 517
TEMPERATURE A, B, C 517
13-4. Reporting Safety Defects (USA) 518
13-5. How to Contact Transport Canada in Order to Report a Safety Concern Relating to the Vehicle (Canada) 519

13-1. For U.S.A.

The following information has been compiled according to Code of Federal Regulations “Title 49, Part 575”.

13-2. Tire Information

■ Tire Labeling

Many markings (e.g. Tire size, Tire Identification Number or TIN) are placed on the sidewall of a tire by tire manufacturers. These marking can provide you with useful information on the tire.

▼ Tire size

Your vehicle comes equipped with P-Metric tire size. It is important to understand the sizing system in selecting the proper tire for your vehicles. Here is a brief review of the tire sizing system with a breakdown of its individual elements.

▽ P Metric

With the P-Metric system, Section Width is measured in millimeters. To convert millimeters into inches, divide by 25.4. The Aspect Ratio (Section Height divided by Section Width) helps provide more dimensional information about the tire size.

Example:

P 205 / 60 R 16

(1) (2) (3) (4) (5)

(1) P = Certain tire type used on light duty vehicles such as passenger cars
(2) Section Width in millimeters
(3) Aspect Ratio (= section height ÷ section width).
(4) R = Radial Construction
(5) Rim diameter in inches

▽ Load and Speed Rating Descriptions

The load and speed rating descriptions will appear following the size designation.

They provide two important facts about the tire. First, the number designation is its load index. Second, the letter designation indicates the tire’s speed rating.

Example:

P	205 / 60 R 16	91	V
	Size designation	(6)	(7)

(6) Load Index: A numerical code which specifies the maximum load a tire can carry at the speed indicated by its speed symbol, at maximum inflation pressure.

For example, “91” means 1,356 lbs (615 kg), “90” means 1,323 lbs (600 kg), “89” means 1,279 lbs (580 kg)

WARNING

Load indices apply only to the tire, not to the vehicle. Putting a load rated tire on any vehicle does not mean the vehicle can be loaded up to the tire’s rated load.

(7) Speed Rating: An alphabetical system describing a tire’s capability to travel at established and predetermined speeds.

For example, “V” means 149 mph (240 km/h)

WARNING

- **Speed ratings apply only to the tire, not to the vehicle. Putting a speed rated tire on any vehicle does not mean the vehicle can be operated at the tire’s rated speed.**
- **The speed rating is void if the tires are worn out, damaged, repaired, retreaded, or otherwise altered from their original condition. If tires are repaired, retreaded, or otherwise altered, they may not be suitable for original equipment tire designed loads and speeds.**

▼ Tire Identification Number (TIN)

Tire Identification Number (TIN) is marked on the intended outboard sidewall. Here is a brief review of the TIN with a breakdown of its individual elements.

Type A

DOT	XX	XX	XXX	XXXX
(1)	(2)	(3)	(4)	(5)

(1) DOT symbol*
(2) Manufacturer’s Identification Mark
(3) Tire Size Code
(4) Tire Type Code (Optional, within 4 letters)
(5) Date of Manufacture

The first two figures identify the week, starting with “01” to represent the first full week of the calendar year; the second two figures represent the year. For example, 0101 means the 1st week of 2001.

*: The DOT symbol certifies that the tire conforms to applicable Federal Motor Vehicle Safety Standards.

– CONTINUED –

Type B

DOT	XXX	XXXXXX	XXXX
(1)	(2)	(3)	(4)

(1) DOT symbol*
(2) Plant Code
(3) Manufacturer's Code
(4) Date of Manufacture

The first two figures identify the week, starting with "01" to represent the first full week of the calendar year; the second two figures represent the year. For example, 0101 means the 1st week of 2001.

*: The DOT symbol certifies that the tire conforms to applicable Federal Motor Vehicle Safety Standards.

▼ Other markings

The following makings are also placed on the sidewall.

▽ Maximum permissible inflation pressure

The maximum cold inflation pressure to which this tire may be inflated. For example, "350 kPa (51 PSI) MAX. PRESS"

▽ Maximum load rating

The load rating at the maximum permissible weight load for this tire. For example, "MAX. LOAD 615 kg (1,356 LBS) @ 350 kPa (51 PSI) MAX. PRESS."

⚠ WARNING

Maximum load rating applies only to the tire, not to the vehicle. Putting a load rated tire on any vehicle does not mean the vehicle can be loaded up to the tire's rated load.

▽ Construction type

Applicable construction of this tire.

For example, "TUBELESS STEEL BELTED RADIAL"

▽ Construction

The generic name of each cord material used in the plies (both sidewall and tread area) of this tire.

For example, "PLIES: TREAD 2 STEEL + 2 POLYESTER + 1 NYLON SIDEWALL 2 POLYESTER"

▽ Uniform Tire Quality Grading (UTQG)

For details, refer to "Uniform Tire Quality Grading Standards" ☞P517.

■ Recommended Tire Inflation Pressure

▼ Recommended cold tire inflation pressure

For the recommended cold tire inflation pressure for your vehicle's tires, refer to "Tires" ☞P495.

▼ Vehicle placard

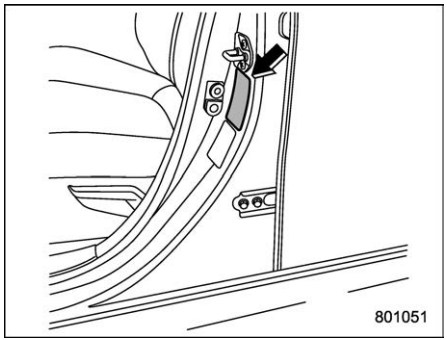

The vehicle placard is affixed to the driver's side B-pillar.

Example:

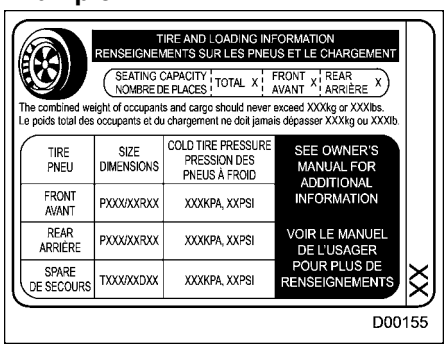

The vehicle placard shows original tire size, recommended cold tire inflation pressure on each tire at maximum loaded vehicle weight, seating capacity and loading information.

▼ Adverse safety consequences of under-inflation

Driving at high speeds with excessively low tire pressures can cause the tires to flex severely and to rapidly become hot. A sharp increase in temperature could cause tread separation, and failure of the tire(s). Possible resulting loss of vehicle control could lead to an accident.

▼ Measuring and adjusting air pressure to achieve proper inflation

Check and, if necessary, adjust the pressure of each tire (including the spare) at least once a month and before any long journey. Check the tire pressures when the tires are cold. Use a pressure gauge to adjust the tire pressures to the specific values. Driving even a short distance warms up the tires and increases the tire pressures. Also, the tire pressures are affected by the outside temperature. It is best to check tire pressure outdoors before driving the vehicle. When a tire becomes warm, the air inside it expands, causing the tire pressure to increase. Be careful not to mistakenly release air from a warm tire to reduce its pressure.

■ Glossary of Tire Terminology

- **Accessory weight**

The combined weight (in excess of those standard items which may be replaced) of automatic transmission, power steering, power brakes, power windows, power seats, radio, and heater, to the extent that these items are available as factory-installed equipment (whether installed or not).

- **Bead**

The part of the tire that is made of

– CONTINUED –

steel wires, wrapped or reinforced by ply cords and that is shaped to fit the rim.

- **Bead separation**

A breakdown of the bond between components in the bead.

- **Bias ply tire**

A pneumatic tire in which the ply cords that extend to the beads are laid at alternate angles substantially less than 90 degrees to the centerline of the tread.

- **Carcass**

The tire structure, except tread and sidewall rubber which, when inflated, bears the load.

- **Chunking**

The breaking away of pieces of the tread or sidewall.

- **Cold tire pressure**

The pressure in a tire that has been driven less than 1 mile or has been standing for three hours or more.

- **Cord**

The strands forming the plies in the tire.

- **Cord separation**

The parting of cords from adjacent rubber compounds.

- **Cracking**

Any parting within the tread, sidewall, or inner liner of the tire extending to cord material.

- **Curb weight**

The weight of a motor vehicle with standard equipment including the maximum capacity of fuel, oil and coolant, and if so equipped, air conditioning and additional weight optional engine.

- **Extra load tire**

A tire designed to operate at higher loads and higher inflation pressure than the corresponding standard tire.

- **Groove**

The space between two adjacent tread ribs.

- **Innerliner**

The layer(s) forming the inside surface of a tubeless tire that contains the inflating medium within the tire.

- **Innerliner separation**

The parting of the innerliner from cord material in the carcass.

- **Intended outboard sidewall**
  (1) The sidewall that contains a whitewall, bears white lettering or bears manufacturer, brand, and/or model name molding that is higher or deeper than the same molding on the other sidewall of the tire, or
  (2) The outward facing sidewall of an asymmetrical tire that has a particular side that must always face outward when mounting on a vehicle.

- **Light truck (LT) tire**

A tire designated by its manufacturer as primarily intended for use on lightweight trucks or multipurpose passenger vehicles.

- **Load rating**

The maximum load that a tire is rated to carry for a given inflation pressure.

- **Maximum inflation pressure**

The maximum cold inflation pressure to which a tire may be inflated.

- **Maximum load rating**

The load rating for a tire at the maximum permissible inflation pressure for that tire.

- **Maximum loaded vehicle weight**

The sum of:

(a) Curb weight
(b) Accessory weight
(c) Vehicle capacity weight
(d) Production options weight

- **Maximum permissible inflation pressure**

The maximum cold inflation pressure to which a tire may be inflated.

- **Measuring rim**

The rim on which a tire is fitted for physical dimension requirements.

- **Normal occupant weight**

150 lbs (68 kg) times the number of occupants specified in the second column of Table 1 that is appended to the end of this section.

- **Occupant distribution**

Distribution of occupants in a vehicle as specified in the third column of Table 1 that is appended to the end of this section.

- **Open splice**

Any parting at any junction of tread, sidewall, or innerliner that extends to cord material.

- **Outer diameter**

The overall diameter of an inflated new tire.

- **Overall width**

The linear distance between the exteriors of the sidewalls of an inflated tire, including elevations due to labeling, decorations, or protective bands or ribs.

- **Passenger car tire**

A tire intended for use on passenger cars, multipurpose passenger vehicles, and trucks, that have a gross vehicle weight rating (GVWR) of 10,000 lbs (4,535 kg) or less.

- **Ply**

A layer of rubber-coated parallel cords.

- **Ply separation**

A parting of rubber compound between adjacent plies.

- **Pneumatic tire**

A mechanical device made of rubber, chemicals, fabric and steel or other materials, that, when mounted on an automotive wheel, provides the traction and contains the gas or fluid that sustains the load.

- **Production options weight**

The combined weight of those installed regular production options weighing over 5.1 lbs (2.3 kg) in excess of those standard items which they replace, not previously considered in curb weight or accessory weight, including heavy duty brakes, ride levelers, roof rack, heavy duty battery, and special trim.

- **Radial ply tire**

A pneumatic tire in which the ply cords that extend to the beads are laid at substantially 90 degrees to the centerline of the tread.

- **Recommended inflation pressure**

The cold inflation pressure recom-

– CONTINUED –

mended by a vehicle manufacturer.

- **Reinforced tire**

A tire designed to operate at higher loads and at higher inflation pressures than the corresponding standard tire.

- **Rim**

A metal support for a tire or a tire and tube assembly upon which the tire beads are seated.

- **Rim diameter**

Nominal diameter of the bead seat.

- **Rim size designation**

Rim diameter and width.

- **Rim type designation**

The industry of manufacturer's designation for a rim by style or code.

- **Rim width**

Nominal distance between rim flanges.

- **Section width**

The linear distance between the exteriors of the sidewalls of an inflated tire, excluding elevations due to labeling, decoration, or protective bands.

- **Sidewall**

That portion of a tire between the tread and bead.

- **Sidewall separation**

The parting of the rubber compound from the cord material in the sidewall.

- **Snow tire**

A tire that attains a traction index equal to or greater than 110, compared to the ASTM E1136-93 Standard Reference Test Tire, when using the snow traction test as described in ASTM F-1805-00, Standard Test Method for Single Wheel Driving Traction in a Straight Line on Snow-and Ice-Covered Surfaces, and that is marked with an Alpine Symbol "⛄" on at least one sidewall.

- **Test rim**

The rim on which a tire is fitted for testing, and it may be any rim listed as appropriate for use with that tire.

- **Tread**

That portion of a tire that comes into contact with the road.

- **Tread rib**

A tread section running circumferentially around a tire.

- **Tread separation**

Pulling away of the tread from the tire carcass.

- **Treadwear indicators (TWI)**

The projections within the principal grooves designed to give a visual indication of the degrees of wear of the tread.

- **Vehicle capacity weight**

The rated cargo and luggage load plus 150 lbs (68 kg) times the vehicle's designated seating capacity.

- **Vehicle maximum load on the tire**

Load on an individual tire that is determined by distributing to each axle its share of the maximum loaded vehicle weight and dividing by two.

- **Vehicle normal load on the tire**

Load on an individual tire that is determined by distributing to each axle its share of the curb weight, accessory weight, and normal oc-

cupant weight (distributed in accordance with Table 1 that is appended to the end of this section) and dividing by 2.

- **Wheel-holding fixture**

The fixture used to hold the wheel and tire assembly securely during testing.

Table 1 — Occupant loading and distribution for vehicle normal load for various designated seating capacities

Designated seating capacity, number of occupants	Vehicle normal load, number of occupants	Occupant distribution in a normally loaded vehicle
2 through 4	2	2 in front.
5 through 10	3	2 in front, 1 in second seat.
11 through 15	5	2 in front, 1 in second seat, 1 in third seat, 1 in fourth seat.
16 through 22	7	2 in front, 2 in second seat, 2 in third seat, 1 in fourth seat.

– CONTINUED –

Tire Care – Maintenance and Safety Practices

- Check on a daily basis that the tires are free from serious damage, nails, and stones. At the same time, check the tires for abnormal wear.
- Inspect the tire tread regularly and replace the tires before their tread wear indicators become visible. When a tire's tread wear indicator becomes visible, the tire is worn beyond the acceptable limit and must be replaced immediately. With a tire in this condition, driving at even low speeds in wet weather can cause the vehicle to hydroplane. Possible resulting loss of vehicle control can lead to an accident.
- To maximize the life of each tire and ensure that the tires wear uniformly, it is best to rotate the tires every 6,000 miles (10,000 km). For details about tire rotation, refer to "Tire Rotation" ☞P466. Replace any damaged or unevenly worn tire at the time of rotation. After tire rotation, adjust the tire pressures and make sure the wheel nuts are correctly tightened. For information about the tightening torque and tightening sequence for the wheel nuts, refer to "Tire Replacement" ☞P467.

Vehicle Load Limit – How to Determine

The load capacity of your vehicle is determined by weight, not by available cargo space. The load limit of your vehicle is shown on the vehicle placard attached to the driver's side B-pillar. Locate the statement "The combined weight of occupants and cargo should never exceed XXX kg or XXX lbs" on your vehicle's placard.

The vehicle placard also shows seating capacity of your vehicle.

The total load capacity includes the total weight of driver and all passengers and their belongings, any cargo, any optional equipment such as a trailer hitch, roof rack or bike carrier, etc., and the tongue load of a trailer. Therefore cargo capacity can be calculated by the following method.

Cargo capacity = Load limit − (total weight of occupants + total weight of optional equipment + tongue load of a trailer (if applicable))

▼ Calculating total and load capacities varying seating configurations

Calculate the available load capacity as shown in the following examples:

Example 1A

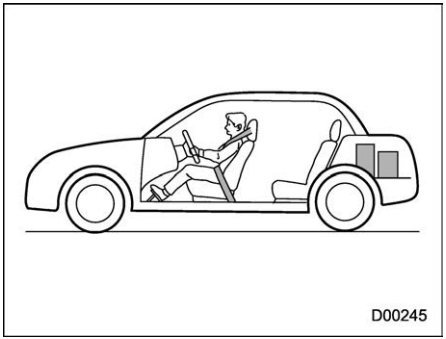

Vehicle capacity weight of the vehicle is 800 lbs (363 kg), which is indicated on the vehicle placard with the statement “The combined weight of occupants and cargo should never exceed 363 kg or 800 lbs”.

For example, if the vehicle has one occupant weighing 154 lbs (70 kg) plus cargo weighing 551 lbs (250 kg).

1. Calculate the total weight.

Total weight

= 154 lbs (70 kg) (Occupant) + 551 lbs (250 kg) (Cargo)

= **705 lbs (320 kg)**

2. Calculate the available load capacity by subtracting the total weight from the vehicle capacity weight of 800 lbs (363 kg).

Available Load Capacity

= 800 lbs (363 kg) (Vehicle capacity weight) – 705 lbs (320 kg) (Total weight)

= **95 lbs (43 kg)**

3. The result of step 2 shows that a further 95 lbs (43 kg) of cargo can be carried.

Example 1B

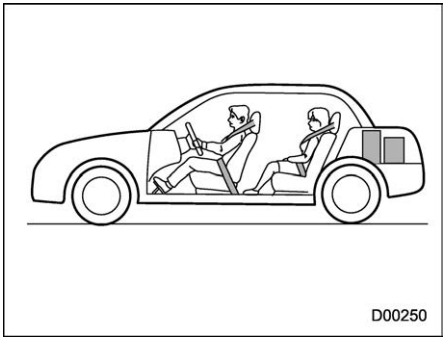

For example, if a person weighing 176 lbs (80 kg) now enters the same vehicle (bringing the number of occupants to two), the calculations are as follows:

1. Calculate the total weight.

Total weight

= 154 lbs (70 kg) + 176 lbs (80 kg) (Occupant)

+ 551 lbs (250 kg) (Cargo)

= **881 lbs (400 kg)**

– CONTINUED –

2. Calculate the available load capacity.

Available Load Capacity

= 800 lbs (363 kg) – 881 lbs (400 kg)
(Vehicle capacity weight) (Total weight)

= **–81 lbs (–37 kg)**

3. The total weight now exceeds the capacity weight by 81 lbs (37 kg), so the cargo weight must be reduced by 81 lbs (37 kg) or more.

Example 2A

CAUTION

Your vehicle is neither designed nor intended to be used for trailer towing. Therefore, never tow a trailer with your vehicle.

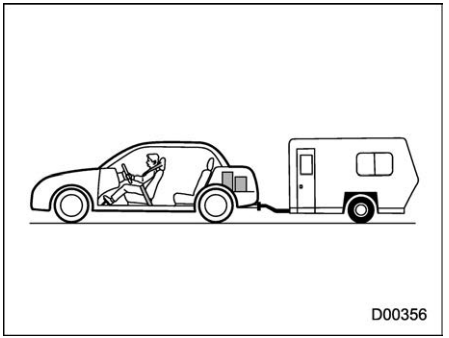

Vehicle capacity weight of the vehicle is 800 lbs (363 kg), which is indicated on the vehicle placard with the statement “The combined weight of occupants and cargo should never exceed 363 kg or 800 lbs”.

For example, the vehicle has one occupant weighing 165 lbs (75 kg) plus cargo weighing 265 lbs (120 kg). In addition, the vehicle is fitted with a trailer hitch weighing 22 lbs (10 kg), to which is attached a trailer weighing 1,764 lbs (800 kg). 10% of the trailer weight is applied to the trailer tongue (i.e. Tongue load = 176 lbs (80 kg)).

1. Calculate the total weight.

Total weight

= 165 lbs (75 kg) + 265 lbs (120 kg)
(Occupant) (Cargo)

+ 22 lbs (10 kg) + 176 lbs (80 kg)
(Trailer hitch) (Tongue load)

= **628 lbs (285 kg)**

2. Calculate the available load capacity.

Available Load Capacity

= 800 lbs (363 kg) – 628 lbs (285 kg)
(Vehicle capacity weight) (Total weight)

= **172 lbs (78 kg)**

3. The result of step 2 shows that a further 172 lbs (78 kg) of cargo can be carried.

Example 2B

CAUTION

Your vehicle is neither designed nor intended to be used for trailer towing. Therefore, never tow a trailer with your vehicle.

For example, if a person weighing 143 lbs (65 kg) and a child weighing 40 lbs (18 kg) now enter the same vehicle (bringing the number of occupants to three), and a child restraint system weighing 11 lbs (5 kg) is installed in the vehicle for the child to use, the calculations are as follows:

1. Calculate the total weight.

Total weight

= 165 lbs (75 kg) + 143 lbs (65 kg) (Occupant)

+ 40 lbs (18 kg) (Occupant)

+ 11 lbs (5 kg) (Child restraint) + 265 lbs (120 kg) (Cargo)

+ 22 lbs (10 kg) (Trailer hitch) + 176 lbs (80 kg) (Tongue load)

= **822 lbs (373 kg)**

2. Calculate the available load capacity.

Available Load Capacity

= 800 lbs (363 kg) (Vehicle capacity weight) – 822 lbs (373 kg) (Total weight)

= **–22 lbs (–10 kg)**

3. The total weight now exceeds the capacity weight by 22 lbs (10 kg), so the cargo weight must be reduced by 22 lbs (10 kg) or more.

■ Determining Compatibility of Tire and Vehicle Load Capacities

The sum of four tires' maximum load ratings must exceed the maximum loaded vehicle weight ("GVWR"). In addition, sum of the maximum load ratings of two front tires and of two rear tires must exceed each axle's maximum loaded capacity ("GAWR"). Original equipment tires are designed to fulfill those conditions.

The maximum loaded vehicle weight is referred to Gross Vehicle Weight Rating (GVWR). And each axle's maximum loaded capacity is referred to Gross Axle Weight Rating (GAWR). The GVWR and each axle's GAWR are shown on the vehicle certification label affixed to the driver's door.

The GVWR and front and rear GAWRs are determined by not only

– CONTINUED –

the maximum load rating of tires but also loaded capacities of the vehicle's suspension, axles and other parts of the body.

Therefore, this means that the vehicle cannot necessarily be loaded up to the tire's maximum load rating on the tire sidewall.

■ Adverse Safety Consequences of Overloading on Handling and Stopping and on Tires

Overloading could affect vehicle handling, stopping distance, vehicle and tire as shown in the following. This could lead to an accident and possibly result in severe personal injury.

- Vehicle stability will deteriorate.
- Heavy and/or high-mounted loads could increase the risk of rollover.
- Stopping distance will increase.
- Brakes could overheat and fail.
- Suspension, bearings, axles and other parts of the body could break or experience accelerated wear that will shorten vehicle life.
- Tires could fail.
- Tread separation could occur.
- Tire could separate from its rim.

■ Steps for Determining Correct Load Limit

1. Locate the statement "The combined weight of occupants and cargo should never exceed XXX kg or XXX lbs." on your vehicle's placard.
2. Determine the combined weight of the driver and passengers that will be riding in your vehicle.
3. Subtract the combined weight of the driver and passengers from XXX kg or XXX lbs.
4. The resulting figure equals the available amount of cargo and luggage load capacity. For example, if the "XXX" amount equals 1,400 lbs (635 kg) and there will be five 150 lbs (68 kg) passengers in your vehicle, the amount of available cargo and luggage load capacity is 650 lbs (1,400 − 750 (5 × 150) = 650 lbs).
5. Determine the combined weight of luggage and cargo being loaded on the vehicle. That weight may not safely exceed the available cargo and luggage load capacity calculated in Step 4.
6. If your vehicle will be towing a trailer, load from your trailer will be transferred to your vehicle. Consult this manual to determine how this reduces the available cargo and luggage load capacity of your vehicle.

13-3. Uniform Tire Quality Grading Standards

This information indicates the relative performance of passenger car tires in the area of treadwear, traction, and temperature resistance. This is to aid the consumer in making an informed choice in the purchase of tires.

Quality grades can be found where applicable on the tire sidewall between tread shoulder and maximum section width. For example:

TREADWEAR 200 TRACTION AA TEMPERATURE A

The quality grades apply to new pneumatic tires for use on passenger cars. However, they do not apply to deep tread, winter type snow tires, space-saver or temporary use spare tires, tires with nominal rim diameters of 12 inches or less, or to some limited production tires.

All passenger car tires must conform to Federal Safety Requirements in addition to these grades.

■ TREADWEAR

The treadwear grade is a comparative rating based on the wear rate of the tire when tested under controlled conditions on a specified government test course.

For example, a tire graded 150 would wear one and one-half (1-1/2) times as well on the government course as a tire graded 100. The relative performance of tires depends upon the actual conditions of their use, however, and may depart significantly from the norm due to variations in driving habits, service practices and differences in road characteristics and climate.

■ TRACTION AA, A, B, C

The traction grades, from highest to lowest, are AA, A, B and C. Those grades represent the tire's ability to stop on wet pavement as measured under controlled conditions on specified government test surfaces of asphalt and concrete. A tire marked C may have poor traction performance.

⚠ WARNING

The traction grade assigned to this tire is based on straight-ahead braking traction tests, and does not include acceleration, cornering, hydroplaning, or peak traction characteristics.

■ TEMPERATURE A, B, C

The temperature grades are A (the highest), B, and C, representing the tire's resistance to the generation of heat and its ability to dissipate heat when tested under controlled conditions on a specified indoor laboratory test wheel. Sustained high temperature can cause the material of the tire to degenerate and reduce tire life, and excessive temperature

– CONTINUED –

can lead to sudden tire failure. The grade C corresponds to a level of performance which all passenger car tires must meet under the Federal Motor Vehicle Safety Standard No. 109. Grades B and A represent higher levels of performance on the laboratory test wheel than the minimum required by law.

WARNING

The temperature grade for this tire is established for a tire that is properly inflated and not overloaded. Excessive speed, underinflation, or excessive loading, either separately or in combination, can cause heat buildup and possible tire failure.

13-4. Reporting Safety Defects (USA)

If you believe that your vehicle has a defect which could cause a crash or could cause injury or death, you should immediately inform the National Highway Traffic Safety Administration (NHTSA) in addition to notifying Subaru of America, Inc.

If NHTSA receives similar complaints, it may open an investigation, and if it finds that a safety defect exists in a group of vehicles, it may order a recall and remedy campaign. However, NHTSA cannot become involved in individual problems between you, your dealer, or Subaru of America, Inc. To contact NHTSA, you may call the Vehicle Safety Hotline toll-free at 1-888-327-4236 (TTY: 1-800-424-9153); go to http://www.safercar.gov; or write to: Administrator, NHTSA, 1200 New Jersey Avenue, SE, West Building, Washington, DC 20590. You can also obtain other information about motor vehicle safety from http://www.safercar.gov.

13-5. How to Contact Transport Canada in Order to Report a Safety Concern Relating to the Vehicle (Canada)

Transport Canada - ASFAD
330 Sparks Street
Ottawa, ON K1A 0N5

Telephone: 819-994-3328
(Ottawa-Gatineau area or internationally)
Toll free: 1-800-333-0510 (in Canada)

Online:
http://www.tc.gc.ca/recalls

Transports Canada - ASFAD
330, rue Sparks
Ottawa (Ontario) K1A 0N5

Téléphone: 819-994-3328
(dans la région de Ottawa-Gatineau et à l'extérieur du pays)
Sans frais: 1-800-333-0510 (au Canada)

Internet:
http://www.tc.gc.ca/rappels D01001

There is an illustrated index in this Owner's Manual. If you have difficulty finding your target items in the index, try to use the illustrated index.

Illustrated index 13

A

Abbreviation 4
ABS (Anti-lock Brake System) 334
  Warning light 162
Access key fob 106
  Warning indicator 168
Accessories 480
Accessory power outlet 286
Air cleaner element 455
Air conditioner
  Automatic climate control 265
  Manual climate control system 267
Air filtration system 274
Airflow mode selection 267
Alarm system 131
All-Wheel Drive 395
Alloy wheel 472
  Cleaning 435
Antenna
  Roof antenna 278
Arming the system 132
Armrest 38
Ashtray 294
Assist grip 295
Audio
  Antenna 278
  Set 278
Auto dimmer cancel function 154
Auto on/off headlights 230
  Sensor 232
Auto Start Stop system 348
  Indicator light 175, 348
  No Activity Detected indicator light 176, 352
  OFF indicator light 175, 351
  ON/OFF icon 191, 218
  Warning light 175, 351
Auto Vehicle Hold 343
  Function 343
  ON indicator light 165
  ON/OFF icon 192, 218
Auto-dimming mirror 245
Auto-dimming mirror/compass 246, 247
Automatic headlight beam leveler 238
  Warning light 174
Automatic Locking Retractor/Emergency Locking Retractor (ALR/ELR) 40

B

Battery
  Drainage reduction functions 150
  Jump starting 417
  Replacement (access key fob) 486
  Replacement (remote engine start transmitter) 322
  Replacement (transmitter) 487
  Vehicle battery 478
Blind Spot Detection (BSD) 358
Booster cushion 63

Booster seat 63
Bottle holder 286
Brake 332
Breaking-in of new brake pads 460
Disc 496
Disc brake pad wear warning indicators 333
Fluid 458, 494
Pad 460
Parking 340
Pedal 459
Tips 332
Brake system 332
Assist 333
Warning light 163
BSD/RCTA 357
Approach indicator light/warning buzzer 361
OFF indicator 176, 363
Warning indicator 176, 364
Warning volume 362
Bulb
Chart 497
Replacement 481

C

Camera
Rear view camera 353
Cargo area
Cover 298
Light 281
Tie-down hooks 300
Catalytic converter 393
Center console 284
Center console tray 284
Center information display (CID) 186
11.6-inch display models 188
Cleaning 438
Display Off 192, 216
Dual 7.0-inch display models 211
Center tray 283
Changing
Coolant 455
Engine oil and oil filter 452
Washer fluid 472
Charge warning light 160
CHECK ENGINE warning light/Malfunction indicator light 159
Checking
Coolant level 454
Fluid level (brake fluid) 458
Fluid level (washer fluid) 472
Oil level (engine oil) 451
Child restraint systems 54
Installation of a booster cushion 63
Installation of a booster seat 63
Installation with ALR/ELR seatbelt 59
Lower and tether anchorages (LATCH) 65
Top tether anchorages 70
Child safety 5
Locks 134
Chime
Key reminder 147
Light 229

Seatbelt 155
Cleaning
Alloy wheels 435
Center information display 438
Exterior care 434
Interior 437
Ventilation grille 272
Climate control system 260
Automatic 265
Manual 267
Clock 225
Coat hook 296
Combination meter display (color LCD) 177
Compass 246, 247
Continuously variable transmission (CVT) 324
Fluid 457, 494
Oil temperature warning light (AT OIL TEMP) 160
Coolant 454, 495
Changing 455
Temperature gauge 152
Cooling system 453
Corrosion protection 436
Cup holder 285
Front passenger's 285
Rear passenger's 285

D

Daytime running light (DRL) system 236
Defogger 243
Defrosting 271
Deicer 243
Differential gear oil 458, 494
Dimensions 490
Disarming the alarm system 133
Display Off 192, 216
Dome light 280
Door
Locks 127
Open indicator 166
Unlock selection function 113
Double trip meter 151
Drainage reduction functions 150
Drive belts 457
Driver Monitoring System 207, 378
OFF indicator light 177, 385
Operation indicator light 177, 385
Register user 207
Temporary stop indicator light 177, 385
Warning light 177, 385
DriverFocus 378
Driving
All-Wheel Drive model 395
Drinking 7
Drugs 7
Foreign countries 394
Pets 8
Snowy and icy roads 398
Tips 329, 395
Tired or sleepy 7
Winter 396

E
Electrical system 495
Electronic Brake Force Distribution (EBD) system 335
Warning 164
Electronic parking brake 340, 425
Automatic release function by accelerator pedal 342
Indicator light 164, 340
Switch 340
Warning 164, 346
Emergency Locking Retractor (ELR) 40
Engine 491
Compartment overview 450
Coolant 454, 495
Exhaust gas (carbon monoxide) 6, 392
Hood 448
Hood open warning light 166
Hood release knob 448
Low oil level warning indicator 160
Oil 451, 492
Overheating 420
Starting & stopping 311, 314
Event data recorder 11
Exterior care 434

F
Flat tire repair kit 410
Technical data of air compressor 415
Flat tires 407
Floor mat 296
Fluid
Brake 458
Continuously variable transmission 457
Fluid level 494
Fog light 238
Indicator light 175
Switch 238
Front
Differential gear oil 458, 494
Passenger's frontal airbag ON and OFF indicators 158
Passenger's seatbelt warning light 155
Turn signal light 481
Front seats 28
Forward and backward adjustment 31
Head restraint adjustment 32
Manual seat 31
Power seat 30
Reclining 31
Seat height adjustment (driver's seat) 32
Fuel 305, 491
Consumption indicator 182
Economy hints 392
Filler lid and cap 306
Gauge 152
Low fuel warning light 165
Requirements 305, 491
Tank capacity 491
Fuses 479

G
GAWR (Gross Axle Weight Rating) 402
Glove box 283
GVWR (Gross Vehicle Weight Rating) 402

H
Hazard warning flasher..... 150, 406
Head restraint adjustment
Front seat..... 32
Rear seat..... 37
Headlight..... 230, 481
Aim adjustment..... 484
Beam leveler..... 238
Control switch..... 229
Flasher..... 233
Indicator light..... 175
Warning light..... 175, 481
Welcome lighting function..... 231
Heated Steering Wheel system..... 256
High Beam Assist
Function..... 233
Indicator..... 174
High/low beam change (dimmer)..... 233
Hill start assist..... 347
HomeLink®..... 247
Hook
Cargo tie-down..... 300
Coat..... 296
Shopping bag..... 297
Towing and tie-down..... 421
Horn..... 257

I
Icy road surface warning indicator..... 176
Ignition switch..... 146
Light..... 147
Illumination brightness control..... 153
Immobilizer..... 121
Indicator/Indicator light
Auto Start Stop..... 175
Auto Start Stop No Activity Detected..... 176
Auto Start Stop OFF..... 175, 351
Auto Vehicle Hold ON..... 165, 343
BSD/RCTA OFF..... 176, 363
Door open..... 166
Driver Monitoring System OFF..... 177, 385
Driver Monitoring System operation..... 177, 385
Driver Monitoring System temporary stop..... 177, 385
Electronic parking brake..... 164, 340
Front fog light..... 175
Front passenger's frontal airbag ON and OFF..... 158
Headlight..... 175
High beam..... 174
High beam assist..... 174, 234
Immobilizer..... 173
Intelligent (I) mode..... 174, 330
Malfunction..... 159
RAB OFF..... 176
Security..... 121, 173
Select lever/Gear position..... 174
SI-DRIVE..... 174
Sonar audible alarm OFF..... 176
Sport (S) mode..... 174, 330
Steering Responsive Headlight OFF..... 175
Turn signal..... 174
Vehicle Dynamics Control OFF..... 168
Vehicle Dynamics Control operation..... 167

Inside mirror 245
Interior lights 280

J
Jack and jack handle 407
Jack handle 407
Jump starting 417

K
Key
- Access key fob 106, 122
- Number plate 106
- Positions 146
- Reminder chime 147
- Replacement 121

Keyless access with push-button start system 106
- Disabling keyless access functions 116
- Locking and unlocking doors 110
- Warning chimes and warning indicator 119, 168
- When access key fob does not operate properly 426

Keyless entry system 122

L
Lane Change Assist (LCA) 358
Lap belt pretensioner 51
Leather seat materials 437
LED headlight warning light 175, 481
LED headlights 481
License plate light 484

Light
- Back-up 483, 498
- Cargo area 281, 498
- Control switch 229
- Daytime running 236
- Dome 280, 498
- Front fog 238, 498
- Front position 229, 498
- Front side marker 230, 498
- High-mounted stop 498
- Ignition switch 147
- License plate 484, 498
- Map 280, 498
- Rear combination 481, 498
- Rear turn signal 239, 481, 498
- Tail and stop 498
- Turn signal 239, 481, 498
- Vanity mirror 282, 498

Loading your vehicle 400
Low fuel warning light 165
Low tire pressure warning light 161
Lower anchors and tethers for children (LATCH) 65

M
Maintenance
- Precautions 443
- Schedule 443
- Seatbelt 48
- Tips 446
- Tools 406

Malfunction indicator light (Check Engine warning light) 159
Manual
Climate control 267
Mode (continuously variable transmission) 328
Seat 31
Map light 280, 498
Meters and gauges 150
Mirror defogger 243
Mirrors 245
Moonroof 139, 430
Switch 140

N
New vehicle break-in driving 392

O
Odometer 151
Oil filter 452
Oil level
Differential gear 458
Engine 451
Warning light 160
Oil pressure warning light 160
One-touch lane changer 239
Outside
Mirror defogger 243
Mirrors 255
Overheating engine 420

P
Parking your vehicle 340
Parking brake 340
Tips 346
Passenger seatbelt reminder 155
Periodic inspections 394
Petrol fuel 305
PIN Code Access 113
Power
Outlets 286
Outside mirrors 255
Seat 30
Steering 331
Steering warning light 166
USB power supply 287
Window switches 135
Windows 134
Precautions against vehicle modification 53, 101
Preparing to drive 311
Push-button
Ignition switch 148
Starting and stopping engine 314

R
Rear
Combination lights 481
Differential gear oil 458, 494
Gate 427
Turn signal light 481
Rear Cross Traffic Alert (RCTA) 359

Rear gate 137
Rear Seat Reminder 53
Rear seatbelt warning light..... 157
Rear seats 34
Armrest 38
Folding down..... 35
Head restraint adjustment 37
Rear view camera..... 353
Rear window
Defogger 243
Wiper and washer switch 242
Wiper blade rubber 476
Wiper blades 476
Recommended
Brake fluid 494
Continuously variable transmission fluid 494
Differential gear oil 458
Engine oil 492
Spark plugs..... 495
Refueling 306
Remote control mirror switch..... 255
Remote engine start system..... 317
Replacing battery..... 322
Remote keyless entry system..... 122
Replacing battery..... 485
Replacement
Access key fob battery 486
Air cleaner element 456
Brake pad 459
Cabin air filter..... 274
Key 121
Remote engine start transmitter battery 322
Remote keyless entry transmitter battery 125, 487
Tire..... 467
Wheel 470
Wiper blades 473
Replacing bulbs 481
Back-up light 483
Front turn signal light..... 481
Headlight..... 481
License plate light 484
Rear combination light 481
Rear turn signal light 481
Reverse Automatic Braking (RAB) system..... 367
OFF indicator..... 176, 369, 376
ON/OFF setting..... 376
Warning indicator 176, 369, 376
Rocking the vehicle 400
Roof
Antenna 278
Roof molding and crossbar..... 402

S

Safety
Precautions when driving 5
Symbol 4
Warnings..... 3
Sealing flat tire 407
Flat tire repair kit..... 410
How to seal 411
Safety precautions 407

Seat
Fabric 437
Front 28
Heater 33
Height adjustment 32
Manual seat 31
Power seat 30
Rear 34
Seatbelt 5, 39
Extender 48
Fastening 41
Maintenance 48
Pretensioners 50
Safety tips 39
Warning light and chime 155
Security
Alarm system 131
Immobilizer 121
Indicator light 173
Select lever 325
Position indicator 174
Shift lock function 326
Shift paddle 328
Shopping bag hook 297
Shoulder pretensioners 51
SI-DRIVE 330
Indicator 174
Intelligent (I) mode indicator 174, 330
Sport (S) mode indicator 330
Switch 330
Snow tires 399, 461
Snowy and icy roads 398
Sonar Audible Alarm OFF indicator 176
Sounding a panic alarm 125
Spark plugs 457, 495
Specifications 490
Speedometer 150
SRS airbag (Supplemental Restraint System airbag) 5, 71
System monitors 99
System servicing 100
System warning light 80, 99, 158
Starting & stopping engine 311, 314
State emission testing (U.S. only) 309
Steering lock 313, 316
Steering Responsive Headlight (SRH) 237
OFF indicator light 175, 237
Warning light 175
Steering wheel
Heated Steering Wheel system 256
Lock 313, 316
Power steering 331
Tilt/telescopic 256
Warning light 166
Storage compartment 283
Summer tires 460
Sun visors 281
Sunshade 141
Supplemental Restraint System (SRS) airbag 71
Curtain airbag 78, 92
Driver’s airbag 78, 80
Front passenger’s airbag 78, 80

Knee airbag 78, 80
Seat cushion airbag 78, 80
Side airbag 78, 92
Synthetic leather upholstery 438

T
Tachometer 151
Temperature gauge 152
Temperature warning light
AT OIL TEMP 160
Tether (child restraint system) 65, 70
Tie-down hooks 421
Tilt/telescopic steering wheel 256
Tire 460, 495
All season 460
Chains 400
Information 504
Inspection 462
Pressures and wear 463
Replacement 467
Rotation 466
Size and pressure 495
Summer 460
Types 460
Winter (snow) 461
Tire pressure monitoring system
(TPMS) 161, 338, 416, 461
Screen 340
Warning light 161
Tires and wheels 460
Tools 406
Top tether anchorages 65, 70
Towing 421
All wheels on the ground 424
Flat-bed truck 424
Tie-down hooks 421
Trip meter 151
Turn signal
Indicator lights 174
Lever 239
Light 481

U
Under-floor storage compartment 300
USB power supply 287

V
Valet mode 134, 228
Activation 228
Deactivation 229
Vanity mirror 282
Light 282
Vehicle
Capacity weight 401
Identification 500
Symbols 5
Vehicle Dynamics Control
OFF indicator light 168
Operation indicator light 167
Warning light 167
Ventilator 260

W

Warning and indicator lights 154
Warning chimes
Driver Monitoring System 385
Keyless access with push-button start system 168
Seatbelt 155
Warning light/Warning indicator
ABS 162
Access key 168
All-Wheel Drive 166
AT OIL TEMP 160
Auto Start Stop 175, 351
Automatic headlight beam leveler 174
Brake system 163
BSD/RCTA 176
Charge 160
CHECK ENGINE 159
Disc brake pad wear 333
Driver Monitoring System 177, 385
Engine hood open 166
Engine low oil level 160
Front passenger's seatbelt 155
Icy road surface 176
Keyless access with push-button start system 168
LED headlight 175, 481
Low fuel 165
Low tire pressure 161, 338
Oil pressure 160
Power steering 166, 331
RAB 176, 369, 377
Rear seatbelt 157
Seatbelt 155
SRS airbag system 80, 99, 158
Steering Responsive Headlight 175
Vehicle Dynamics Control 167
Windshield washer fluid 166
Warranties 2
Washing 434
Waxing and polishing 435
Wear indicators 465
Welcome lighting function 231
Wheel
Alloy 472
Balance 465
Covers 471
Nut tightening torque 495
Replacement 470
Windows 134
Windshield
Washer fluid 472
Washer fluid warning light 166
Wiper and washer switches 241
Wiper blades 474
Wiper deicer 243
Winter
Driving 396
Tires 399, 461
Wiper and washer 240
Wiper deicer 243

GAS STATION REFERENCE

■ Fuel

Use only **unleaded gasoline** with an octane rating of **87 AKI (90 RON) or higher**.

■ Fuel Octane Rating

▼ AKI

This octane rating is the average of the Research Octane and Motor Octane numbers and is commonly referred to as the Anti Knock Index (AKI).

▼ RON

This octane rating is the Research Octane Number.

■ Limit of Ethanol Content

No more than 15%

■ Fuel Tank Capacity

16.6 US gal (63 liters, 13.9 Imp gal)

■ Engine Oil

Use only the following oils.

- ILSAC GF-6B, which can be identified with the ILSAC certification mark (Shield mark)
- or ILSAC GF-6A, which can be identified with the ILSAC certification mark (Starburst mark)
- or API classification SP with the words “RESOURCE CONSERVING”

For the complete viscosity requirements, refer to “Engine Oil” ☞P492.

■ Engine Oil Capacity

4.7 US qt (4.4 liters, 3.9 Imp qt)

The indicated oil quantity is only a guideline and is estimated based on a case when the engine oil is changed with an oil filter. Check the oil level using an oil level gauge after refilling the engine with oil. For more details about maintenance and service, refer to “Engine Oil” ☞P451.

■ Cold Tire Pressure

Refer to “Tires” ☞P495.