DODGE

SPRINTER

2007 SPRINTER

2007 OWNER'S MANUAL

Thank you for choosing the new Sprinter.

Before your first journey, please familiarize yourself with your vehicle and how it operates, as well as its driving, control and convenience functions.

Before you drive off, read these Operating Instructions. This will help you get the most out of your vehicle and avoid endangering yourself and others.

Since the scope of delivery is based on the sales order, your vehicle's equipment may differ from some descriptions and illustrations. Items of optional equipment are also described in these Operating Instructions, should you require a description of the way they work.

Country-specific vehicle equipment, limited availability of items of special equipment or different product labeling is possible in some countries.

DaimlerChrysler Vans LLC reserves the right to introduce changes in design, equipment and technical features. You cannot, therefore, base any claims on the data, illustrations or descriptions contained in these Operating Instructions.

Your nearest authorized Sprinter Dealer will be happy to assist you further if you have any other questions.

The Operating Instructions, brief instructions, Sprinter Service Booklet, Owner's Warranty Information Book and equipment-related supplementary operating instructions are considered part of the vehicle. For this reason, you should always keep them in the vehicle and pass them on to the new owner if you sell the vehicle.

The technical documentation team at DaimlerChrysler Vans LLC wishes you safe and pleasant driving.

Symbols

*	Optional equipment
⚠	Warning
	Environmental note
!	Caution
ℹ	Tip
▶	Action required
▶	Sequence of actions (several ▶)
▷ ▷	Continuation symbol
▷ ▷	Continuation symbol for warnings
▷ page	Page reference
`Display`	Display in the multifunction display

Trademarks

ESP® is a registered trademark of DaimlerChrysler.

Introduction 3

1 At a glance 11

2 Safety 23

3 Controls in detail 51

4 Operation 173

5 Practical hints 249

6 *Technical data 351

Index 377

Environmental note

DaimlerChrysler's declared policy is one of comprehensive environmental protection.

The objectives are for the natural resources which form the basis of our existence on this planet to be used sparingly and in a manner which takes the requirements of both nature and humanity into account.

You too can contribute to environmental protection by operating your vehicle in an environmentally-responsible manner.

Fuel consumption and engine, transmission, brake and tire wear depend on the two following factors:

- Operating conditions of your vehicle
- Your personal driving style

You can influence both factors.

Observe the following notes:

Operating conditions

- Avoid driving short distances as this increases fuel consumption.
- Make sure that the tire pressures are always correct.
- Do not carry any unnecessary weight in / on the vehicle.
- Keep an eye on the vehicle's fuel consumption.
- Remove roof racks once you no longer need them.
- A regularly serviced vehicle will contribute to environmental protection. You should therefore adhere to the specified service intervals.
- Always have maintenance work carried out at an authorized Sprinter Dealer.

Personal driving style

- Do not depress the accelerator pedal when starting the engine.
- Do not warm up the engine when the vehicle is stationary.
- Adopt an anticipatory style of driving and keep a sufficient distance from other vehicles.
- Avoid frequent, sudden acceleration.
- Switch off the engine in stationary traffic.

Environmental concerns and recommendations

In this manual, whenever you see instructions to discard materials, you should first attempt to reclaim and recycle them. To preserve our environment, follow appropriate environmental rules and regulations when disposing of materials.

Operating safety

Warning

Engine exhaust, some of its constituents, and certain vehicle components contain or emit chemicals known to the State of California to cause cancer and birth defects or other reproductive harm.

In addition, certain fluids contained in vehicles, and certain products of component wear, contain chemicals known to the State of California to cause cancer and birth defects or other reproductive harm.

Warning

Work carried out incorrectly on electronic equipment and its software could cause the equipment to stop working. The electronic systems are networked with each other via interfaces. Tampering with the electronic systems may also cause malfunctions in systems that have not been modified. These malfunctions, however, can jeopardize the operating safety of your vehicle and therefore put your own safety at considerable risk.

Other work carried out incorrectly or modifications to the vehicle could also jeopardize operating safety.

Some safety systems only function while the engine is running. Therefore, you should not switch off the engine while driving.

Warning

Always have maintenance work carried out at an authorized Sprinter Dealer which has the necessary specialist knowledge and tools to carry out the work required. The manufacturer recommends that you use an authorized Sprinter Dealer for this purpose.

In particular, work relevant to safety or on safety-related systems must be carried out at an authorized Sprinter Dealer.

Warning

A heavy impact to the underbody, tires or wheels, for example when bottoming out on rough terrain or driving over an obstacle at high speed, could damage your vehicle. This also applies to vehicles equipped with underbody protection.

In this case, have your vehicle checked at an authorized Sprinter Dealer which has the necessary specialist knowledge and tools to carry out the work required. The manufacturer recommends that you use an authorized Sprinter Dealer for this purpose.

In particular, work relevant to safety or on safety-related systems must be carried out at an authorized Sprinter Dealer.

Service and warranty information

The manufacturer warrants to the original and each subsequent owner of a Mercedes-Benz heavy-duty on highway diesel engine that:

(1) the engine was designed, built and equipped so as to conform at the time of sale with the applicable regulations adopted by the Federal Environmental Protection Agency, and

(2) the emission control system of such engine is free from defects in materials and workmanship which would cause it not to conform with those regulations for a period of use of five years or 100000 miles or 3000 hours of engine operation, whichever occurs first.

The Owner's Warranty Information Book contains detailed information about the warranties covering your Sprinter.

Registering your vehicle

The manufacturer may instruct its authorized Sprinter Dealer to carry out technical inspections on certain vehicles to improve their quality or safety.

If you did not purchase your vehicle from an authorized dealership and your vehicle has not yet been inspected at an authorized Sprinter Dealer, there is a possibility that your vehicle has not been registered in your name with the manufacturer. The manufacturer will only be able to inform you about vehicle inspections if the manufacturer is in possession of your registration data.

It is advisable to have your vehicle registered at an authorized Sprinter Dealer.

Inform the manufacturer as soon as possible if your address has changed or there has been a change of vehicle owner.

Digital speedometer and total distance recorder

Do not allow the electronically stored total distance covered by your vehicle to be modified as a result of tampering with the electronics system.

This type of modification or failing to inform the buyer when selling the vehicle could constitute an offense punishable by law, depending on the country concerned.

Modifying the engine power output

Having the engine power output of your vehicle increased by tampering with the electronic engine management system will invalidate the vehicle's general operating permit and insurance coverage, as well as your warranty and warranty entitlement.

Modifications to the output of the engine must be reported to the insurance provider and require the vehicle to be recertified. The tires, chassis, brake and cooling systems must be adapted to the increased engine power output.

Tampering with the electronic engine management system modifies emission values and it will not be possible to guarantee the operating safety of the engine in every case. Increases in performance may lead to malfunctions and consequential damage to other assemblies.

If you sell the vehicle, failing to inform the buyer of the modified engine power output could constitute an offense punishable by law, depending on the country concerned.

Vehicle alterations

The manufacturer recommends the use of genuine Sprinter parts and conversion parts as well as accessories that have been expressly approved for your vehicle model (▷ page 352).

These parts have been subjected to special tests in order to determine their safety, reliability and suitability.

Body builder guideline

If you intend on making any alterations to the vehicle, we strongly recommend that you select one of the following options in order to obtain all necessary information:

- Contact the authorized Sprinter Dealer nearest you to obtain a copy of the Sprinter Body Builder Guideline.
- Call DaimlerChrysler Vans LLC at telephone (800) 992-1997 to request a copy of the Sprinter Body Builder Guideline (there may be a charge).
- Write to the following address and order the Sprinter Body Builder Guideline (there may be a charge).

  DaimlerChrysler Vans LLC
  P.O. Box 21-8004
  Auburn Hills, MI 48321-8004
  United States of America

Body builders and dealers who make any modifications which may affect the final certification of the engine, vehicle or equipment assume the sole responsibility for the vehicle, including labeling and documentation, affected by their modifications.

It is their responsibility to certify that the altered vehicle conforms to all applicable standards and regulations affected by the vehicle alteration or continues to comply with the motor vehicle safety standards and emissions regulations.

They are responsible for ensuring that modifications or equipment installation does not affect the safety of the vehicle.

Warning

Any modifications or alterations of the Sprinter vehicle not in compliance with the Sprinter Body Builder Guideline and the Sprinter Operator's Manual may seriously inhibit its roadworthiness and safety and may lead to an accident resulting in serious personal injury or death.

Consult the Sprinter Body Builder Guideline and the Sprinter Operator's Manual prior to initiating any alterations or modifications.

The manufacturer is not responsible for any final certification or claims regarding product liability, or warranty claims, which result from any component, assembly, or system being altered, or which cause non-compliance with any of the emission control standards or motor vehicle safety standards, or which would otherwise cause the vehicle to be or become defective or unsafe.

The manufacturer does not assume the responsibility as the final stage manufacturer or the consequential product liability.

Correct use

Warning

Be sure to read the Operating Instructions. Otherwise, you may not be aware of certain risks and could injure yourself or others.

Observe the following information when using your vehicle:

- The safety notes in this manual
- The "Technical data" section in this manual
- Traffic rules and regulations
- Motor vehicle laws and safety standards

Warning

Various warning labels are affixed to your vehicle. These warning labels are intended to make you and others aware of various risks. You should not remove any of these warning labels unless explicitly instructed to do so by information on the label itself. Removal of any of these labels may cause you and others to be unaware of certain risks which may result in an accident and/or personal injury.

Problems with your vehicle

If you should experience a problem with your vehicle, particularly one that you believe may affect its safe operation, we urge you to immediately contact an authorized Sprinter Dealer to have the problem diagnosed and corrected if required.

If the matter is not handled to your satisfaction, please discuss the problem with the Sprinter Dealer management, or if necessary contact us at the following address.

In the USA:

DaimlerChrysler Motors Corporation Customer Center
P.O. Box 21-8004
Auburn Hills, MI 48321-8001
United States of America
Telephone: 800-992-1997

In Canada:

DaimlerChrysler Canada, Inc. Customer Center
P.O. Box 1621
Windsor, Ontario N9A 4H6
Telephone: (800) 465-2001

▼ REPORTING SAFETY DEFECTS

In the 50 United States and Washington D.C.: If you believe that your vehicle has a defect, which could cause a crash or cause injury or death, you should immediately inform the National Highway Traffic Safety Administration (NHTSA) in addition to notifying the manufacturer.

If the NHTSA receives similar complaints, it may open an investigation, and if it finds that a safety defect exists in a group of vehicles, it may order a recall and remedy campaign. However, NHTSA cannot become involved in individual problems between you, your dealer, and the manufacturer.

To contact NHTSA, you may either call the Auto Safety Hotline toll free at 1–888–327–4236 (TTY: 1-800-424-9153), or go to http://www.safercar.gov; or write to: Administrator, NHTSA, 400 Seventh Street, SW., Washington DC 20590. You can also obtain other information about motor vehicle safety from http://www.safercar.gov.

http://www.NHTSA.gov.

In Canada:

If you believe that your vehicle has a safety defect, you should contact the Customer Service Department immediately.
Canadian customers who wish to report a safety defect to the Canadian government should write to
Transport Canada, Motor Vehicle Defect Investigations and Recalls, 2780 Sheffield Road, Ottawa, Ontario K1B 3V9.

▼ Information regarding electronic recording devices

(Including notice pursuant to California Code § 9951)

Please note that your vehicle is equipped with devices that can record vehicle systems data.

This information helps, for example, to diagnose vehicle systems after a collision and to continuously improve vehicle safety. DaimlerChrysler may access the information and share it with others

- for safety research or vehicle diagnosis purposes
- with the consent of the vehicle owner or lessee
- in response to an official request by law enforcement or other government agency
- for use in dispute resolution involving DaimlerChrysler, its affiliates or sales/service organization and/or
- as otherwise required or permitted by law.

Cockpit 12

Instrument cluster 14

Steering wheel with buttons* 17

Center console 18

Overhead control panel* 19

Switch units 20

Door control panel 22

▼ Cockpit

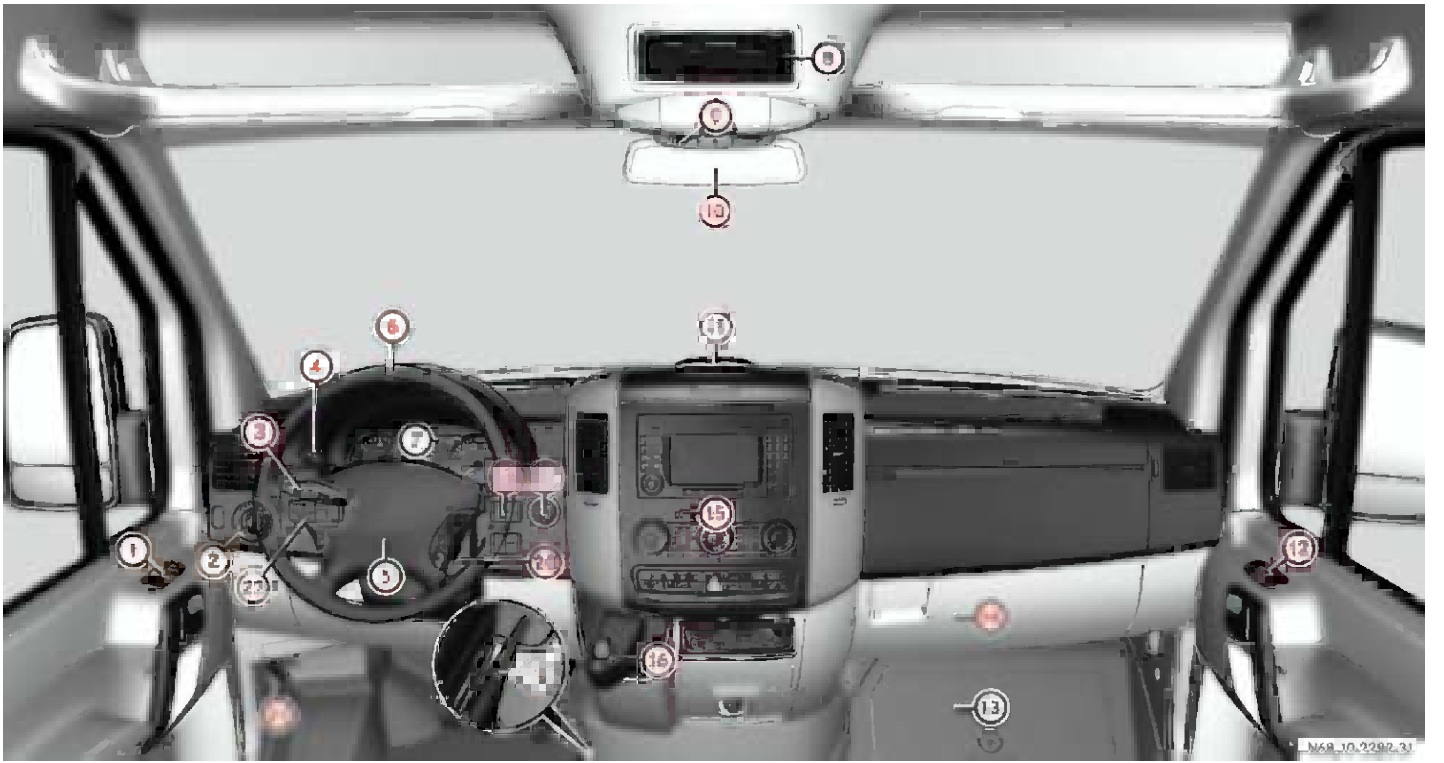

	Function	Page
①	Door control panel	22
②	Light switch	77
③	Combination switch	
	• Turn signals	79
	• High-beam headlamps	77
	• Windshield wipers	126
	• Rear window wiper*	127
④	Cruise control lever*	147
⑤	Horn	
⑥	Steering wheel without/ with* buttons	17

	Function	Page
⑦	Instrument cluster	14, 84
⑧	Storage compartment	
⑨	Storage compartment with interior lamp	80
	Overhead control panel*	19
⑩	Rear-view mirror*	125
⑪	Warning display for Park-tronic system*	150
⑫	Opens / closes the right-hand side window	144
⑬	Jack and vehicle tool kit	300
⑭	Glove box	165

	Function	Page
⑮	Center console	18
⑯	Selector lever (automatic transmission)	111
⑰	Ignition lock	67
⑱	Additional switch unit	20
⑲	Handbrake	115
⑳	Steering wheel adjustment	76
㉑	Hood lock release	185
㉒	Additional switch unit	20

▼ Instrument cluster

1

	Function	Page
①	Instrument cluster on vehicles without steering wheel buttons	84
②	Instrument cluster on vehicles with steering wheel buttons*	84
③	M On vehicles without steering wheel buttons: • Changes the standard display • Selects menus	87
④	On vehicles with steering wheel buttons*: Checks the engine oil level	187

	Function	Page
⑤	0 Reset button	84
⑥	Speedometer with:	85
	Indicator and warning lamps	16
⑦	Indicator and warning lamps	16
⑧	Display on vehicles without steering wheel buttons	87
⑨	Display on vehicles with steering wheel buttons*	89
⑩	Tachometer with:	85
	Indicator and warning lamps	16
⑪	+ − • Instrument lighting brighter / dimmer	85

	Function	Page
⑫	Fuel gauge with:	86
	• Reserve fuel warning lamp	276
	• Fuel filler flap location indicator ◀: Fuel filler flap is on the left-hand side	

ℹ

Vehicles without steering wheel buttons:
Display ⑧ contains a digital fuel gauge.

Vehicles with steering wheel buttons*:
The tachometer contains an analog fuel gauge.

Indicator and warning lamps	Page
ESP® warning lamp	43 268
ASR warning lamp	44 45 268
Coolant level too low	275
Coolant temperature too high	275
Restraint systems malfunction	272
Brake fluid level too low	269
EBV malfunction	268
Malfunction in trailer's brake booster	269
Engine oil level warning	274
Engine diagnostic indicator lamp	277
Pre-glow system, diesel engine only	111 276
Turn signal, left	79

Indicator and warning lamps	Page
Combination low tire pressure/TPMS malfunction telltale, USA only	278
Low tire pressure telltale, Canada only	278
Windshield washer/headlamp cleaning system* washer fluid level too low	280
Door open	280
Brake pads/linings worn	273
Turn signal, right	79
ABS malfunction	271
ASR malfunction	270
BAS malfunction	270
ESP® malfunction	272
Reserve fuel	276
Fuel filler flap open	276

Indicator and warning lamps	Page
Water in the fuel	280
Battery charge malfunction	273
Defective bulb	280
Handbrake applied	115
Low-beam headlamps on	77
Operating speed governor on*	154
High-beam headlamps on	77
Seat belt reminder	280

ℹ

Vehicles with steering wheel buttons: Corresponding messages may also be shown in display ⑨ (▷ page 93).

▼ Steering wheel with buttons*

	Function	Page
①	Display	89
	Controlling the operating system	
②	To select a submenu or adjust the volume + Up / increases the volume – Down / decreases the volume	89
③	Telephone* functions Accepts a call / starts dialing Ends a call / rejects an incoming call	107

	Function	Page
④	To jump from one menu to another Forward Backward	89
⑤	To jump from one submenu to another Forward Backward	89

▼ Center console

1

	Function	Page
①	Storage compartment	166
②	Radio* or COMAND*, see the separate operating instructions	
③	Air-conditioning control panel	131
④	Center console switch unit	20

	Function	Page
⑤	• Storage compartment or • CD changer*, see the separate operating instructions	
⑥	Cup holder with	167
	• Ashtray	168
	• Cigarette lighter	169
⑦	12 V socket	170

▼ Overhead control panel*

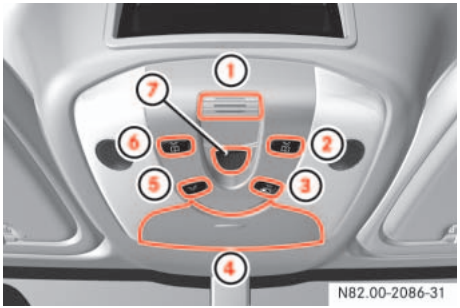

	Function	Page
①	Hands-free microphone for telephone*	
②	Switches the right-hand reading lamp on/off	81
③	Switches the automatic interior lighting on/off	81
④	• Eyeglass compartment or • Anti-theft alarm system (ATA)*	166 47
⑤	Switches the interior lighting on/off	80
⑥	Switches the left-hand reading lamp on/off	81
⑦	Opens/closes the sliding sunroof*	145

▼ Switch units

1

Center console switch unit

ℹ
The number of switches may vary, depending on the vehicle's equipment.

	Function	Page
	Opens/closes the left-hand electric sliding door*	57
	Switches the left/right seat heating* on/off	73
	Switches the rear window heating* on/off	128
	Switches the windshield heating* on/off	127
ASR OFF	Activates/deactivates ASR	44
	Switches the hazard warning flashers on/off	80
	Central locking Interior/rear compartment	63
OFF P	Switches the Parktronic system (PTS)* on/off	150
	Opens/closes the right-hand electric sliding door*	57

Additional switch units

Switch unit between the light switch and the steering wheel

	Function	Page
	Switches the heater booster function* on/off	137
	Switches auxiliary heating* on/off	140
	Switches the heater booster function* on/off	137
	Adjusts the working engine speed*	155
	Switches the operating speed governor* on/off	154
	Ventilates the load compartment, air in/air out*	146

The layout of the switches may vary, depending on the vehicle's equipment.

Switch unit between the steering wheel and the ignition lock

	Function	Page
	Switches the rear-compartment convenience interior lighting* on/off	82

The layout of the switches may vary, depending on the vehicle's equipment.

▼ Door control panel

1

	Function	Page
①	Adjusts the exterior mirrors*	125
②	Selects an exterior mirror*	125
③	Opens / closes the left-hand side window	144
④	Opens / closes the right-hand side window	144

Occupant safety 24

Driving safety systems 42

Anti-theft systems 47

▼ Occupant safety

Restraint systems

This section contains all the most important information about the restraint systems in your vehicle. In an accident, your vehicle collides with another object, for example another vehicle. This may cause your vehicle to accelerate or decelerate extremely quickly. During this acceleration or deceleration, the vehicle occupants will be moved in the opposite direction to the force of the impact. There is therefore the risk of vehicle occupants injuring themselves on the vehicle interior or on parts of the vehicle. The purpose of supplemental restraint systems, for example the seat belts supplemented by emergency tensioning retractors, belt force limiters and airbags when necessary, is to minimize the risk of injury. However, the seat belts and airbags cannot generally prevent injuries caused by objects penetrating the vehicle from the outside.

The most important restraint systems are:

- the seat belts
- restraint systems for children, since they are the most effective means of reducing the extent to which the occupants are moved in the event of an accident

Additional protection is provided by:

- SRS (Supplemental Restraint System), comprising:
  - emergency tensioning retractors
  - belt force limiters
  - airbags

ℹ

An airbag increases the degree of protection afforded to vehicle occupants wearing a seat belt and is therefore only to be considered as an additional restraint system to the seat belt. Airbags do not in any way relieve any vehicle occupants of the need to wear their seat belt correctly at all times.

This is partly because an airbag is not activated in all accident situations because in some cases it would not provide any additional protection to that already afforded by a correctly fastened seat belt.

Furthermore, an activated airbag can only provide increased protection if the seat belt is being worn correctly, because:

- the belt helps to hold the vehicle occupant in the best position in relation to the airbag
- the belt prevents the vehicle occupant from being propelled in the opposite direction to the force of impact, for example in the event of a head-on collision, and is therefore better able to reduce the risk of injury

In accidents in which an airbag is activated, the airbag will therefore only offer an increase in the protection provided by the seat belt, i.e. additional protection, if the seat belt is worn correctly.

Warning

Modifications to or work incorrectly carried out on a restraint system (seat belt and seat belt anchorages, emergency tensioning retractor, belt force limiter or airbag) or its wiring, or tampering with other networked electronic systems, could cause the restraint systems to stop working correctly. The airbags or emergency tensioning retractors could, for example, be activated inadvertently or could fail in accidents in which the deceleration force is sufficient to trigger the airbag. For this reason, do not modify the restraint systems. Do not tamper with electronic components or their software.

Airbags

Warning

Airbags do offer additional protection but they are not a substitute for the seat belts. To reduce the risk of serious or fatal injuries, make sure that all occupants – in particular, expectant mothers – wear their seat belt correctly at all times, have adopted a normal sitting position and that the seat is positioned as upright as possible.

Seat belts

The most important restraint systems in the vehicle are the seat belts and child restraint systems. They are the most effective means of preventing vehicle occupants from moving towards the point of impact and thus reducing the risk of occupants hitting parts of the vehicle interior.

In many countries there are regulations concerning the use of seat belts and child restraint systems.

Warning

A seat belt that is worn incorrectly or not at all, or that is not correctly engaged in the seat belt buckle, cannot perform its intended protective function. In certain circumstances, you could be seriously or even fatally injured. Make sure, that all occupants – in particular, expectant mothers – wear their seat belt correctly at all times.

You must make sure that the belt:

- is routed as low as possible across your pelvic area, for example across your hip joints and not across your abdomen
- fits closely
- is not twisted
- is routed across the middle of your shoulder
- is not routed across your neck or under your arm
- is pulled tight across the lap by pulling upwards on the shoulder belt

▷▷

Do not secure any objects with a seat belt if it is being used by one of the vehicle's occupants.

Avoid wearing bulky clothing, for example a winter coat.

Do not route the belt strap over sharp or fragile objects, especially if these are located in or on your clothing, for example eyeglasses, pens or keys. The belt strap could otherwise tear in the event of an accident and you or other vehicle occupants could be injured as a result.

Only one person may use each seat belt at any one time.

A child must never be carried sitting on the lap of a vehicle occupant. It would not be possible to restrain the child, and the child and other vehicle occupants could be seriously or fatally injured in the event of abrupt braking or an accident.

Persons less than 1.50 m tall or children under 12 years of age cannot wear their seat belt properly. They therefore require additional restraint systems on suitable vehicle seats for protection in an accident. Always observe the installation instructions issued by the manufacturer of the child restraint systems.

Warning

The seat belt only provides its intended degree of protection if the seat backrest is positioned as vertically as possible, allowing the occupant to sit upright. Avoid seat positions that do not allow the seat belt to be routed correctly. Therefore, position the backrest as vertically as possible. Never drive with the backrest tilted too far back. You could otherwise be seriously or even fatally injured in the event of an accident or abrupt braking.

Warning

The seat belt cannot perform its protective function correctly if the seat belt strap or buckle are dirty or damaged. You should therefore keep the belt strap and buckle clean, as otherwise the belt latch plate may not be able to engage correctly.

Check regularly that the seat belts:

- are not damaged
- are not routed over sharp edges
- are not trapped

The belt strap could otherwise tear in the event of an accident. You or others could be seriously or fatally injured.

Always have seats belts that are damaged or have been subjected to a heavy load in an accident replaced, and their anchorages checked, at a qualified specialist workshop which has the necessary specialist knowledge and tools to carry out the work required.

The manufacturer recommends that you use an authorized Sprinter Dealer for this purpose. In particular, work relevant to safety or on safety-related systems must be carried out at a qualified specialist workshop .

For safety reasons, the manufacturer recommends that you only use seat belts that have been specially approved for your vehicle by the manufacturer.

Wearing seat belts

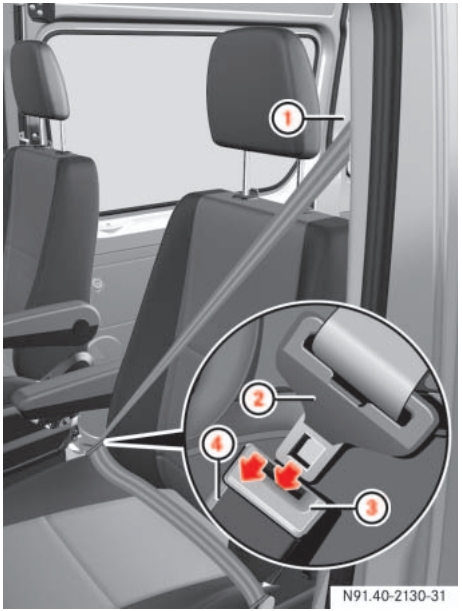

① Belt sash guide (▷ page 28)
② Belt latch plate
③ Release button
④ Buckle

▶ Pull the belt smoothly from the seat belt reel holder.

▶ Route the belt over your shoulder.

▶ Click belt latch plate ② into buckle ④.

▶ Adjust the belt to the correct height if necessary.

▶ Pull the shoulder section of the belt upwards to tighten the belt against your body if necessary.

Adjusting the belt height

Warning ⚠

Only adjust the belt height when the vehicle is stationary and the handbrake is applied.

You could otherwise lose control of the vehicle as a result of the seat adjusting movement and thereby endanger yourself and others.

You can adjust the belt height for the following seats:

- Driver's seat
- Outer co-driver's seat

Adjust the belt height in such a way that the shoulder belt is routed over the middle of the shoulder.

Belt sash guide with height adjustment
⑤ Release button

▶ **To raise the belt height:** slide belt sash guide ① upward.

Belt sash guide ① engages in various positions.

▶ **To lower the belt height:** press and hold release button ⑤.

▶ Slide belt sash guide ① to the desired height.

▶ Let go of release button ⑤ and make sure that belt sash guide ① engages.

SRS (Supplemental Restraint System)

The SRS (Supplemental Restraint System) may consist of the following components, depending on the equipment level:

- SRS warning lamp
- Emergency tensioning retractors
- Belt force limiters
- Airbag system with:
  - Airbag control unit
  - Airbags

SRS warning lamp

The SRS performs a self-test at regular intervals when the ignition is switched on and while the engine is running. Malfunctions can therefore be detected in good time.

The SRS warning lamp in the instrument cluster (▷ page 14) comes on for approximately 4 seconds when you switch on the ignition.

Warning ⚠

A malfunction has occurred if the SRS warning lamp:

- does not come on when you switch on the ignition
- does not go out after approximately 4 seconds
- lights up again

Individual systems may be activated unintentionally or may not be triggered in the event of an accident with a high rate of vehicle deceleration.

In this case, have the SRS system checked and repaired immediately at a qualified specialist workshop which has the necessary specialist knowledge and tools to carry out the work required.

The manufacturer recommends that you use an authorized Sprinter Dealer for this purpose. In particular, work relevant to safety or on safety-related systems must be carried out at a qualified specialist workshop.

Activation of emergency tensioning retractors, belt force limiters and airbags

In the event of a collision, the sensor in the airbag control unit evaluates important physical data, such as duration, direction and rate of vehicle deceleration or acceleration. Based on the evaluation of this data and depending on the vehicle's rate of longitudinal deceleration in a collision, in the first stage, the airbag control unit pre-emptively triggers the emergency tensioning retractors.

The front airbags are not triggered unless a second activation threshold is exceeded, i.e. if there is a greater rate of vehicle deceleration in a longitudinal direction.

Criteria for triggering of emergency tensioning retractors and airbags

To determine whether it is necessary to trigger an emergency tensioning retractor or airbag, the airbag control unit evaluates the duration and direction of deceleration or acceleration during the initial phase of the collision.

The emergency tensioning retractor and airbag activation thresholds are variable and are adapted to the rate of the vehicle deceleration. This process is pre-emptive in nature as the airbag must be deployed during – and not at the end of – the collision.

ℹ

Airbags are not triggered in all types of accident. They are actually controlled by complex sensor technology and evaluation logic. This process is pre-emptive in nature as airbag deployment must take place during the impact and must be adapted to provide calculated, additional protection for the vehicle occupants. Not all airbags are triggered in an accident.

The various airbag systems work independently of each other. However, all systems depend on the type (head-on or side impact) and severity (in particular vehicle deceleration or acceleration) of accident determined in the initial phase of the accident.

Vehicle deceleration or acceleration and the direction of the force are essentially determined by:

- the distribution of the force during the impact
- the collision angle
- the deformation characteristics of the vehicle
- the composition of the object involved in the collision, for example the other vehicle

Factors that cannot be seen or measured until after the collision are not used to determine whether the airbag should be triggered and are not decisive for this.

The vehicle may be substantially deformed without an airbag being triggered, for example if only relatively easily-deformable vehicle parts such as the hood or fenders are affected by the collision and the required deceleration threshold is not reached. On the other hand, airbags may be triggered even though the vehicle only displays minor deformation, if, for example, rigid vehicle parts such as a longitudinal member are affected by the impact, thus causing vehicle deceleration to exceed the pre-determined threshold.

Emergency tensioning retractors, belt force limiters

If the vehicle is equipped with a driver's airbag, the driver's and the co-driver's seat belts are equipped with emergency tensioning retractors.

A belt force limiter additionally installed in the seat belt reduces the load exerted by the seat belt on the occupant when it is triggered.

Emergency tensioning retractors tension the seat belts in an accident, pulling them close against the body.

ⓘ

Emergency tensioning retractors do not correct:

- incorrect sitting positions
- incorrectly worn seat belts

Emergency tensioning retractors do not pull occupants back towards the backrest.

When the ignition is on, the emergency tensioning retractor is activated:

- only if the restraint systems are operational (the SRS-warning lamp comes on for approximately 4 seconds after the ignition is switched on.) (▷ page 28).
- in the event of a head-on or rear-end collision, if there is a high rate of vehicle acceleration or deceleration in the initial stages of a collision
- in the event of a side impact, if the vehicle suddenly decelerates or accelerates in a lateral direction at the initial stage of the impact and the vehicle is equipped with thorax / sidebags and / or windowbags.

If the emergency tensioning retractors are triggered, you will hear a bang that is generally harmless to your hearing. A small amount of powder may also be released. The SRS warning lamp lights up.

Warning

If the emergency tensioning retractors have been triggered, have them replaced at a qualified specialist workshop which has the necessary specialist knowledge and tools to carry out the work required.

The manufacturer recommends that you use an authorized Sprinter Dealer for this purpose. In particular, work relevant to safety or on safety-related systems must be carried out at a qualified specialist workshop.

Observe the safety regulations when disposing of emergency tensioning retractors. You can see a copy of these regulations at any authorized Sprinter Dealer.

Airbag system

Warning

To reduce the risk of serious or fatal injuries in the event of an accident with a high rate of deceleration, for example due to an airbag inflating within milliseconds, or due to sudden braking, please observe the following points:

- All vehicle occupants must select a seat position in which they can wear their seat belt correctly and which is as far back from the airbag as possible. The seat position of the driver must be such that the vehicle can be driven safely. The distance from the driver's seat to the pedals must be such that the driver can fully depress the pedals. The distance between the driver's chest and the center of the airbag cover must be more than 25 cm. The driver's arms should be slightly bent when holding the steering wheel.
- Vehicle occupants should wear their seat belt correctly at all times and lean back against the backrest, which should be positioned as upright as possible. The head restraints should support the back of the head at about eye level.
- Move the co-driver's seat as far to the rear as possible, especially if a child is secured in a restraint system installed on this seat.
- On vehicles with a co-driver's airbag, it is not permitted to secure a rearward-facing child restraint system to the co-driver's seat (▷ page 37). Children in a rearward-facing child restraint system must be secured on a suitable rear seat.
- Do not lean forward, for example over the padded boss of the steering wheel, especially when the vehicle is in motion.
- Only hold the steering wheel by the outer rim. This allows the airbag to inflate fully. If you hold the inside of the steering wheel, you could be injured if the airbag were to be triggered.

▷▷

- Do not put your feet on the dashboard.
- Do not lean on the doors from inside the vehicle.
- Make sure that no persons, animals or objects are present between the vehicle occupants and the deployment range of the airbags.
- Do not cover the padded boss of the steering wheel, the co-driver's airbag cover, the windowbag cover or the thorax / sidebag cover with film or other material. Do not affix any badges or stickers to these areas.
- Do not hang any hard objects, for example coat hangers, on the grab handles or coat hooks.
- Do not place any items in the storage compartment above the co-driver's airbag if they protrude from the compartment. The co-driver's airbag must be able to inflate unimpeded.

The risk of injuries from an airbag cannot be entirely ruled out due to the high speed at which the airbag is required to inflate.

Your vehicle is equipped with the following airbags, depending on the equipment version:

- Driver's front airbag, located in the steering wheel
- Co-driver's front airbag, located above the glove box
- Thorax sidebags* in the outer sides of the driver's seat and the co-driver's individual seat
- Windowbags* in the side of the roof frame between the A and B-pillars

Each airbag's cover is marked with the letters "SRS / AIRBAG" or "AIRBAG".

How airbags work

An airbag inflates within milliseconds. The SRS warning lamp in the instrument cluster comes on.

> ℹ
> If the airbags are triggered, you will hear a bang and a small amount of dust may also be released. The bang will not damage your hearing and the dust does not constitute a health hazard.

Airbag inflation slows down and restricts the movement of the vehicle occupant.

When the vehicle occupant makes contact with the airbag, hot gas flows out of the inflated airbag. This reduces the load on the head and upper body of the vehicle occupant. The airbag is therefore in a deflated state after an accident.

Warning

After an airbag has been triggered:

- airbag parts are hot – do not touch them, otherwise you could be burnt
- the airbags must be replaced at a qualified specialist workshop which has the necessary specialist knowledge and tools to carry out the work required. The manufacturer recommends that you use an authorized Sprinter Dealer for this purpose.
  In particular, work relevant to safety or on safety-related systems must be carried out at a qualified specialist workshop.

Warning

A small amount of fine powder is released as an airbag inflates. This powder does not constitute a health hazard, nor does it imply that fire has broken out in the vehicle. This powder could cause short-term breathing difficulties for persons suffering from asthma or other respiratory conditions. To avoid these breathing difficulties, you should either:

- leave the vehicle immediately, if it is possible to do so safely

or

- open the window to allow fresh air to enter

Front airbags

The front airbags are designed to increase protection to the driver's and co-driver's/co-drivers' head and chest.

The driver's airbag is located in the steering wheel housing; the co-driver's is above the glove box.

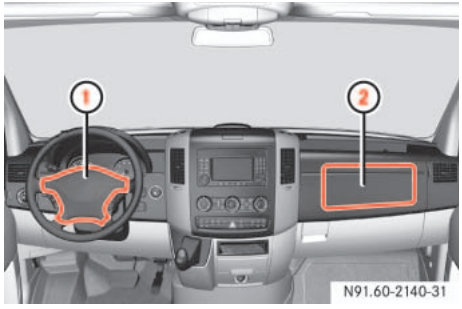

① Driver's airbag
② Co-driver's airbag

Driver's front airbag ① inflates in front of the steering wheel; co-driver's front airbag ② inflates in front of and above the glove box and the center console.

The driver's front airbag and co-driver's front airbag are triggered:

- in the initial stages of an accident with a high rate of vehicle acceleration or deceleration in a longitudinal direction
- if the system determines that airbag deployment can offer additional protection to that provided by the seat belt
- independently of other airbags in the vehicle

Thorax sidebags*

Warning

For safety reasons, the manufacturer recommends that you use seat covers that have been tested for Sprinter vehicles and that have a seam for thorax / sidebags. A thorax / sidebag may otherwise not inflate correctly and could fail to provide the intended degree of protection in the event of a collision. You can obtain these covers from an authorized Sprinter Dealer, for example.

Warning

To reduce the risk of injury to occupants if a thorax / sidebag is triggered, make sure that:

- no persons, animals or objects are present between the vehicle occupants and the thorax / sidebag deployment range
- no accessories, for example cup holders, are secured to the doors
- only light items of clothing are hung from the coat hooks in the vehicle
- there are no heavy or sharp objects in the pockets of items of clothing

Warning

Observe the following to reduce the risk of serious or fatal injury if the thorax / sidebag is triggered:

- Vehicle occupants – in particular, children – must never lean their head against the area of the window in which the thorax / sidebag inflates.
- Vehicle occupants must wear their seat belt correctly at all times and lean back against the backrest, which should be positioned as upright as possible.
- Always secure children who are less than 5 ft (1.50 m) tall or under 12 years of age in a suitable child restraint system.

The purpose of the thorax/sidebags is to increase the level of protection for the thorax (but not the head, neck and arms) of the occupants on the side of the vehicle on which the impact occurs.

The thorax / sidebags are installed in the outer sides of the backrests on the driver's seat and the co-driver's individual seat

① Thorax sidebag

The thorax sidebags are triggered:

- in the initial stages of an accident with a high rate of vehicle acceleration or deceleration in a lateral direction, for example in the event of a side impact
- on the side on which an impact occurs
- if the system determines that airbag deployment can offer additional protection to that provided by the seat belt
- independently of the front airbags

In the event of an accident, the thorax sidebag next to the outer seat side inflates between the door and the chest area of the occupant.

ℹ

You will find additional information about airbag deployment on (▷ page 32).

You will find additional information about the triggering of emergency tensioning retractors and belt force limiters on (▷ page 30).

Windowbags*

Warning ⚠

To ensure that windowbags can provide the intended degree of protection when deployed, make sure that no persons, animals or objects are present between the vehicle occupants and the deployment range of the windowbags.

Warning ⚠

Observe the following to reduce the risk of serious or fatal injury if the windowbag is triggered:

- Vehicle occupants – in particular, children – must never lean their head against the area of the window in which the windowbag inflates.
- Vehicle occupants must wear their seat belt correctly at all times.
- Always secure children who are less than 5 ft (1.50 m) tall or under 12 years of age in a suitable child restraint system.

The windowbags are designed to increase protection to the head (but not to the chest or arms) of the vehicle occupants on the side on which the impact occurs.

The relevant windowbag is installed in the side of the roof frame behind the trim panel between the A and B-pillar.

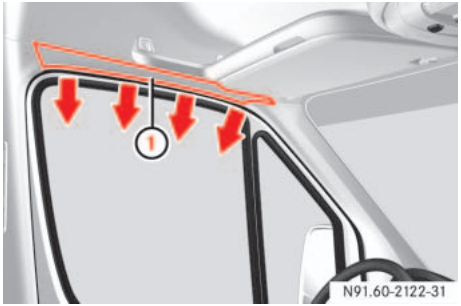

① Windowbag

The windowbags are triggered:

- in the initial stages of an accident with a high rate of vehicle acceleration or deceleration in a lateral direction
- on the side on which an impact occurs
- independently of the front airbags

ℹ

You will find additional information about airbag deployment on (▷ page 32).

You will find additional information about the triggering of emergency tensioning retractors and belt force limiters on (▷ page 30).

Children in the vehicle

If a child is traveling in the vehicle:

- secure the child in a child restraint system appropriate to his/her age and size, preferably on a suitable seat in the rear
- ensure that the child is strapped in throughout the trip

You can obtain child seats and information about the correct child restraint system from any authorized Sprinter Dealer.

Warning ⚠

Do not leave children unsupervised in the vehicle even if they are secured in a child restraint system. The children could:

- injure themselves on parts of the vehicle
- be seriously or even fatally injured by prolonged exposure to extreme heat or cold

Do not expose child restraint systems to direct sunlight. Metallic parts of the child restraint system could heat up, for example, and the child could burn him / herself on the hot parts.

If the children open a door, they could:

- cause injury to others as a result
- get out of the vehicle and could either injure themselves when doing so or they could be injured by passing vehicles
- sustain serious injuries if they were to fall out of the vehicle, due in particular to the height of the passenger compartment from the ground

▷▷

Do not carry heavy or hard objects inside the vehicle or load compartment unless they are secured. You will find further information under “Transporting156” (▷ page 156) and “Features164” (▷ page 164) in the “Controls in detail” section.

An unsecured or incorrectly positioned load increases the risk of injury to occupants, particularly children, in the event of:

- sharp braking
- a sudden change of direction
- an accident

Child restraint systems

We recommend all infants and children be properly restrained at all times while the vehicle is in motion.

All lap-shoulder belts except the driver’s seat belt have special seat belt retractors for secure fastening of child restraints.

To fasten a child restraint, follow child restraint instructions for mounting. Then pull the shoulder belt out completely and let it retract. During seat belt retraction, a ratcheting sound can be heard to indicate taht the special seat belt retractor is activated. The belt is now locked. push down on child restraint to take up any slack.

To deactivate, release seat belt buckle and let seat belt retract completely. The seat belt can again be used in the usual manner.

Warning

Never release the seat belt buckle while the vehicle is in motion, since the special seat belt retractor will be deactivated.

Warning

To reduce the risk of serious or fatal injury to a child in the event of an accident, sharp braking or a sudden change in direction:

- Always secure children less than 5 ft (1.50 m) tall or under 12 years of age in a special child restraint system installed on a suitable vehicle seat, since the seat belts are not designed for this body size.
- Do not secure children under 12 years of age on the co-driver’s seat unless they are secured in a suitable forward-facing child restraint system.
- It is not permitted to secure a child in a rearward-facing child restraint system on the co-driver’s seat if the vehicle is equipped with a co-driver’s airbag. Only secure a rearward-facing child restraint system on a suitable rear seat.
- Always move the co-driver’s seat to its rearmost position if you have secured a child on this seat in a forward-facing child restraint system.
- A child must never be carried sitting on the lap of a vehicle occupant. It would not be possible to restrain the child as a result of the forces acting in the event of an accident, braking or abrupt changes in direction. The child would be thrown against parts of the vehicle interior and be seriously or fatally injured.
- Vehicle occupants must wear their seat belt correctly at all times.

Warning

If the child restraint system is not installed correctly on a suitable vehicle seat, the child may not be restrained in the event of an accident or sudden braking and may be seriously or fatally injured. For this reason, always observe the installation instructions issued by the child restraint system manufacturer and the intended use for the child restraint system when fitting it.

It is advisable to install the child restraint system on one of the rear seats. The child is generally better protected there.

Do not place objects (for example a cushion) underneath the child restraint system. The entire base of the child restraint system must be in contact with the seat cushion at all times.

Child restraint systems must not be used without the original cover. Replace damaged covers only with original covers.

On the rear seats, only use child restraint systems recommended by the manufacturer.

Warning

If you no longer require the child restraint system, remove it from the vehicle or secure it with the seat belt.

The restraint system could otherwise be thrown through the vehicle interior in the event of an accident.

Warning

A child secured in a child restraint system could be seriously or fatally injured in the event of an accident, braking or a sudden change in direction if the child restraint system or its securing system is already damaged or has been subjected to a load in an accident.

Have restraint systems and their securing systems which have been damaged or subjected to a load in an accident checked and, if necessary, replaced immediately at a qualified specialist workshop which has the necessary specialist knowledge and tools for the work required.

The manufacturer recommends that you use an authorized Sprinter Dealer for this purpose. All work relevant to safety or on safety-related systems must be carried out at a qualified specialist workshop.

The use of infant or child restraints is required by law in all 50 states, the District of Columbia, the U.S. territories and all Canadian provinces.

Infants and small children should be seated in an appropriate infant or child restraint system properly secured by a lap / shoulder belt or, if so equipped, a top tether anchorage point and a child restraint lower anchorage system that complies with U.S. Federal Motor Vehicle Safety Standards 213 and 225 and Canadian Motor Vehicle Safety Standard 213 and 210.2.

A statement by the child restraint manufacturer of compliance with this standard can be found on the instruction label on the restraint and in the instruction manual provided with the restraint.

When using any infant or child restraint system, make sure to carefully read and follow all manufacturer's instructions for installation and use.

Please read and observe warning labels affixed to inside of vehicle and to infant or child restraints.

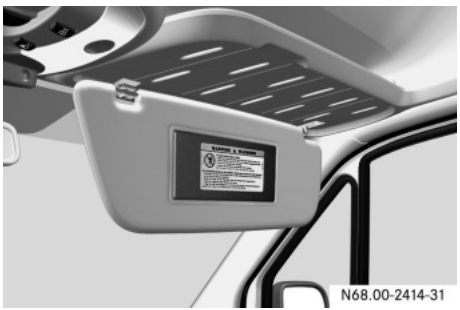

Passenger sun visor with warning sticker

Warning symbol for rearward-facing child seat

ISOFIX child seat securing system/ Child seat anchors - LATCH type

ISOFIX is a standardized securing system on the rear seats for special LATCH (**L**ower **A**nchors and **T**ethers for **Ch**ildren) child restraint systems with matching mounting fittings.

The LATCH type anchors for child restraint systems are installed between the seat cushion and the backrest:

- on the outside left and right on narrow rear bench seats with 3 seats
- on the outside left on rear bench seats with 2 seats

ℹ

Non-LATCH type child seats may also be used and can installed using the vehicle's seat belt system. Install child seat according to manufacturer's instructions.

Warning ⚠

A LATCH type child restraint system that has been secured using the ISOFIX child seat securing system is unable to provide adequate protection for children who weigh more than 48 lbs (22 kg). For this reason, only secure children weighing less than 48 lbs (22 kg) in a LATCH type child restraint system secured using the ISOFIX child seat securing system. If the child weighs more than 48 lbs (22 kg), you should secure the LATCH type child restraint system with a lap-shoulder belt.

Warning

If the child restraint system has not been installed correctly on a suitable vehicle seat, the child cannot be restrained in the event of an accident or sudden braking and could be seriously or fatally injured. You must therefore observe the installation instructions issued by the child restraint system manufacturer when installing a child restraint system.

On the rear bench seat, only use LATCH type child restraint systems with ISOFIX child seat mountings that have been recommended by the manufacturer.

An incorrectly installed child restraint system could come loose and the child or other vehicle occupants could be fatally injured. You must therefore make sure that the child restraint system is engaged in the securing rings on the left and right-hand sides after it has been installed.

Warning

If the child restraint system or its securing system, for example the ISOFIX child seat securing system, are damaged or have been subjected to a load in an accident, the child secured in it could suffer severe or fatal injuries in the event of an accident, heavy braking or a sudden change of direction.

For this reason, have restraint systems and their mountings checked immediately and replaced if necessary at a qualified specialist workshop which has the necessary specialist knowledge and tools to carry out the work required if they are damaged or have been subjected to a load in an accident.

The manufacturer recommends that you use an authorized Sprinter Dealer for this purpose. In particular, work relevant to safety or on safety-related systems must be carried out at a qualified specialist workshop.

CAUTION

Take care not to trap the seat belt on the middle seat when you install the child restraint system.

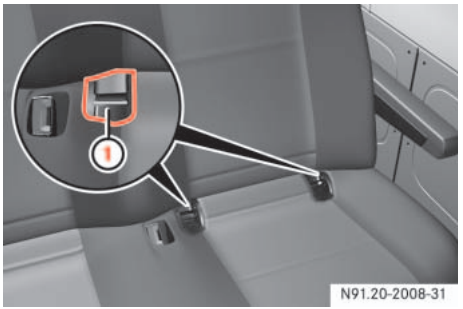

① Securing rings - LATCH type anchors

Warning

Do not leave children unsupervised in the vehicle, even if they are secured by a child restraint system. The children could:

- injure themselves on parts of the vehicle
- be seriously or even fatally injured by prolonged exposure to extreme heat or cold

Warning ⚠

Do not expose child restraint systems to direct sunlight. Metallic parts of the child restraint system could heat up, for example, and the child could burn him / herself on the hot parts.

If the children open a door, they could:

- cause injury to others as a result
- get out of the vehicle and could either injure themselves when doing so or they could be injured by passing vehicles
- sustain serious injuries if they were to fall out of the vehicle, due in particular to the height of the passenger compartment from the ground

TopTether

The TopTether anchorages are on the feet of the rear bench seat.

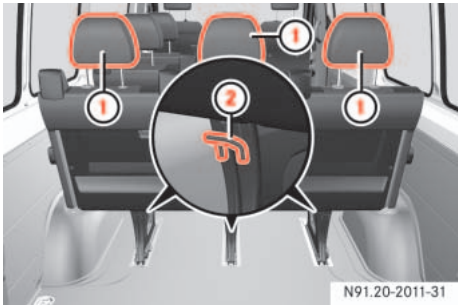

① Head restraints
② TopTether anchorages

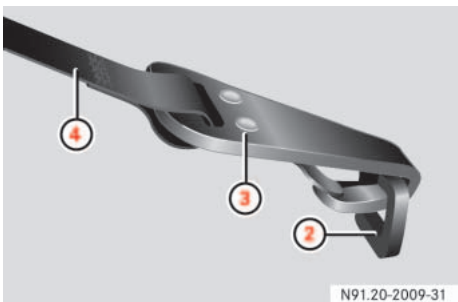

② TopTether anchorage
③ TopTether hook
④ TopTether belt of LATCH type child restraint system

▶ Slide head restraint ① upward.

▶ Guide TopTether belt ④ under head restraint ① from the front and between the two head restraint bars.

▶ Hook TopTether hook ③ into TopTether anchorage ② on the feet of the bench seat.

▶ If necessary, slide head restraint ① back down a little (▷ page 72). Make sure that TopTether belt ④ can move freely.

▶ Install the LATCH type child restraint system with TopTether. The manufacturer's installation instructions must be observed.

▼ Driving safety systems

In this section, you will find information about the following driving safety systems:

- ABS (Antilock Brake System)
- BAS (Brake Assist)
- ESP® (Electronic Stability Program)
- ASR (acceleration skid control)
- EBV (electronic brake force distribution)

ℹ

The maximum effect of ABS, BAS, ESP®, ASR and EBV can only be achieved if you:

- always drive with the correct tire pressures adjusted according to the load (▷ page 210)
- use winter tires (M+S tires) in wintry conditions, with snow chains if necessary

Warning ⚠

There is an increased risk of an accident if you:

- drive too fast, in particular when cornering and on a wet or slippery road surface
- drive too close to the vehicle in front

The driving safety systems described in this section cannot reduce this risk and are unable to override the laws of physics.

Always adapt your driving style to the prevailing road and weather conditions, and maintain an adequately safe distance from other road users as well as any obstacles on the road.

ℹ

Only use wheels with the recommended tire sizes (▷ page 367), otherwise the driving safety systems will not work correctly.

Antilock Brake System (ABS)

ABS regulates the brake pressure in such a way that the wheels do not lock when you brake. This allows you to continue steering when braking.

ABS works from a speed of about 3 mph (5 km/h) upwards, regardless of road surface conditions.

ABS works on slippery surfaces, even when you only brake gently.

Warning ⚠

Do not depress the brake pedal several times in quick succession (pumping). Depress the brake firmly and evenly. Pumping the brake pedal may reduce the braking effect.

There is a malfunction if the ABS indicator lamp is permanently lit while the engine is running (▷ page 271).

Despite this, the normal driving and braking functions remain available.

Braking

If ABS intervenes during braking, you will feel the steering wheel vibrate gently and the brake pedal pulsate.

If ABS intervenes:

▶ Continue to depress the brake pedal firmly until the braking situation is over.

For full brake application:

▶ Depress the brake pedal with maximum force.

Warning ⚠

Always adapt your driving style to the prevailing road and weather conditions, and maintain an adequately safe distance from other road users as well as any obstacles on the road.

If ABS malfunctions, the wheels could lock when you brake. This means that the steerability of the vehicle is restricted during braking and the stopping distance may increase. If ABS is deactivated due to a malfunction, BAS is also deactivated.

Brake Assist (BAS)

Brake Assist operates in emergency braking situations. If you depress the brake pedal quickly, BAS automatically increases the brake pressure, thereby reducing the stopping distance.

▶ Keep the brake pedal firmly depressed until the emergency braking situation is over.

ABS prevents the wheels from locking.

When you release the brake pedal, the brakes will work as normal again. BAS is deactivated.

Vehicles without steering wheel buttons: There is a malfunction if the indicator lamp is permanently lit while the engine is running (▷ page 270).

Warning ⚠

If BAS malfunctions, the brake system is still available with the full brake boosting effect. In an emergency braking situation, however, the braking force will not be additionally boosted automatically and the stopping distance may increase.

Electronic Stability Program (ESP®)

ESP® monitors driving stability and detects a tendency of the vehicle to understeer or oversteer (skidding). ESP® stabilizes the vehicle by braking individual wheels, limiting the engine power output, and greatly assists you when driving on wet or slippery road surfaces. ESP® also stabilizes the vehicle when braking.

When ESP® intervenes, the ⚠ warning lamp in the speedometer flashes.

Warning ⚠

Proceed as follows if the ⚠ warning lamp in the speedometer flashes:

- Do not deactivate ASR under any circumstances.
- Only depress the accelerator pedal as far as necessary when pulling away.
- Adapt your driving style to suit the prevailing road and weather conditions.

Otherwise, the vehicle could begin to skid.

ESP® cannot reduce the risk of an accident if you drive too fast. ESP® is unable to override the laws of physics.

There is a malfunction if the ESP indicator lamp is permanently lit while the engine is running (▷ page 272).

If ESP® malfunctions, engine power output may be reduced.

! CAUTION

Only operate the vehicle briefly (maximum of 10 seconds) on a brake dynamometer. The key must be turned to position **1** in the ignition lock during this time. You could damage the drive train or the brake system.

! CAUTION

Do not operate the vehicle on a roller dynamometer (for example for performance testing). If you wish to operate the vehicle on a roller dynamometer, please consult an authorized Sprinter Dealer beforehand. You could otherwise damage the drive train or the brake system.

Acceleration skid control (ASR)

ASR improves traction for a sustained period, i.e. the transfer of power from the tires to the road surface, and thus also improves the driving stability of the vehicle. ASR assists you when pulling away and accelerating, especially on smooth and slippery surfaces.

ASR brakes individual drive wheels and limits the engine torque to prevent the drive wheels from spinning. When ASR intervenes, the ⚠ indicator lamp in the speedometer flashes.

If the road surface is not capable of providing sufficient traction, bearing in mind the tires, load and gradient, it is not be possible to pull away smoothly even with ASR.

Vehicles without steering wheel buttons: There is a malfunction if the indicator lamp is permanently lit while the engine is running (▷ page 270).

If ASR malfunctions, engine power output may be reduced.

Activating/deactivating ASR

ASR is automatically activated as soon as the engine is switched on.

It may be best to deactivate ASR in the following situations:

- if snow chains are being used
- in deep snow
- on sand or gravel

If you deactivate ASR:

- the engine's torque is then no longer limited and the drive wheels could spin; the spinning wheels produce a cutting effect for better traction
- traction control still intervenes by braking if one drive wheel reaches its grip limit, for example if the surface under one side of the vehicle is slippery. The wheel is then braked to increase traction in this situation.
- ESP® still intervenes to stabilize the vehicle

Warning

ESP® remains active despite ASR having been deactivated and carries out braking interventions if this is necessary to improve driving stability. The ⚠ warning lamp flashes.

If ASR is deactivated, there is an increased risk that the brake system of your vehicle could overheat and be damaged when subjected to high loads for a long period of time. A hot brake system also increases the stopping distance.

For this reason, only deactivate ASR when it is absolutely necessary.

The ASR switch is located on the center console.

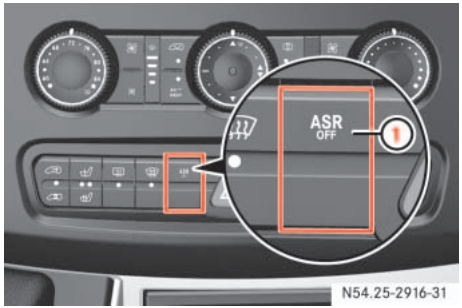

① To deactivate/activate ASR

▶ **To switch off:** press upper section ① of the switch.

The ⚠ warning lamp in the speedometer lights up.

▶ **To switch on:** press upper section ① of the switch again.

The ⚠ warning lamp in the speedometer goes out.

Electronic brake force distribution (EBV)

EBV monitors and regulates the brake pressure at the rear wheels to improve driving stability during braking.

Warning

If EBV malfunctions, the brake system is still available with the full brake boosting effect. However, the rear wheels may lock, for example if the brakes are applied with maximum force. You could then lose control of the vehicle and cause an accident. Always adapt your driving style to the change in handling characteristics.

Have the system checked at an authorized Sprinter Dealer as soon as possible.

There is a malfunction if the ESP, , , and indicator lamps are permanently lit while the engine is running (▷ page 268).

▼ Anti-theft systems

Immobilizer

The immobilizer prevents the vehicle from being started without the correct key.

When leaving the vehicle, always take the key or remote keyless entry transmitter with you and lock the vehicle. The engine could be started by anyone with a valid key or remote keyless entry transmitter that is left inside the vehicle

▶ **To switch on:** remove the key from the ignition lock (▷ page 67).

▶ **To switch off:** switch on the ignition (▷ page 67).

Anti-theft alarm system (ATA)*

A visual and audible alarm is triggered if the alarm system is enabled and:

- a door is opened
- the hood is opened

Enabling the alarm system

▶ Close all the doors.

▶ Lock the vehicle using the button on the key (▷ page 52).

The indicator lamp in the central locking switch (▷ page 63) flashes.

Deactivating the anti-theft alarm system

▶ Unlock the vehicle using the button on the key (▷ page 52).

The indicator lamp in the central locking switch (▷ page 63) goes out.

ℹ The vehicle locks again automatically if you do not open a door within 40 seconds after unlocking the vehicle.

ℹ The alarm system will be triggered if the vehicle has been locked with the key and is then unlocked from the inside.

Switching off the alarm

▶ Insert the key into the ignition lock.

or

▶ Press the button (▷ page 52).

The alarm is switched off.

Tow-away protection*

A visual and audible alarm is triggered if the inclination of the vehicle changes while tow-away protection is enabled.

> ℹ
> The tow-away protection alarm is triggered shortly before the wheel leaves the ground if the vehicle is being jacked up on one side, for example.

Enabling tow-away protection

Tow-away protection is automatically enabled approximately 20 seconds after you lock the vehicle.

Tow-away protection is automatically deactivated when you unlock the vehicle.

Deactivating the tow-away protection for transportation

Deactivate tow-away protection if the vehicle is transported or loaded onto another vehicle. This will prevent false alarms.

The button is located in the overhead control panel.

① To deactivate tow-away protection
② Indicator lamp

▶ Turn the key to position **0** or **1** (▷ page 67) in the ignition lock or remove the key.

> ℹ
> When the ignition is switched off (▷ page 67), you cannot deactivate tow-away protection.

▶ Press button ①.

Indicator lamp ② lights up for approximately 5 seconds after the button is released.

▶ Lock the vehicle using the key.

Tow-away protection remains deactivated until you lock the vehicle again.

Interior motion sensor*

If the anti-theft alarm system is enabled and the vehicle is locked, a visual and audible alarm is triggered if one of the side windows or the rear window on your vehicle is smashed and someone reaches into the interior, for example.

Enabling the interior motion sensor

▶ Close:

- the side windows
- the sliding sunroof

This will prevent false alarms.

▶ Lock your vehicle.

The interior motion sensor is enabled after approximately 40 seconds.

ℹ

Do not leave anything (for example mascots or coat hangers) hanging on the rear-view mirror or on the grab handles on the roof trim. This will prevent false alarms.

Deactivating the interior motion sensor

Deactivate the interior motion sensor if people or animals remain in the locked vehicle. This will prevent false alarms.

The button is located in the overhead control panel.

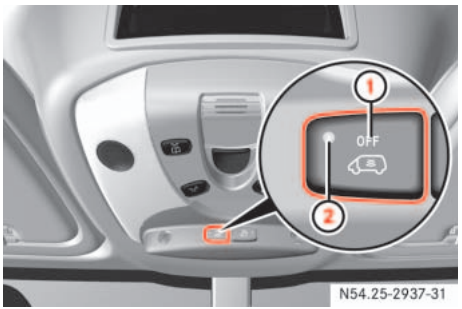

① To deactivate the interior motion sensor
② Indicator lamp

▶ Turn the key to position **0** or **1** (▷ page 67) in the ignition lock or remove the key.

▶ Press button ①.

Indicator lamp ② lights up for approximately 5 seconds after the button is released.

ℹ

The interior motion sensor remains deactivated until you lock the vehicle again.

Opening and closing 52
Key positions 67
Seats 68
Steering wheel adjustment 76
Lighting 77
Instrument cluster 84
Operating system without steering wheel buttons 87
Operating system with steering wheel buttons* 89
Driving and parking 110
Automatic transmission 121
Good visibility 125
Tempmatic 129
Auxiliary heating/ventilation* 139
Open air 144
Driving systems 147
Operating the vehicle 154
Transporting 156
Features 164

▼ Opening and closing

Remote control with key

Included with your vehicle are 2 or 4* remote keyless entry transmitters with a folding mechanical key.

ℹ

USA only:
This device complies with Part 15 of the FCC rules. Operation is subject to the following two conditions:

(1) This device may not cause harmful interference, and

(2) this device must accept any interference received, including interference that may cause undesired operation.

Any unauthorized modification to this device could void the user's authority to operate the equipment.

ℹ

Canada only:
This device complies with RSS-210 of Industry Canada.

Keys which were not included with delivery must be activated at an authorized Sprinter Dealer before they can be used.

The remote keyless entry transmitter transmits in all directions. It does not have to be pointed at the vehicle.

The remote keyless entry transmitter has an average range of about 32 ft (about 10 m). Always verify the correct operation of the remote keyless entry transmitter by checking whether the locking knobs on the driver's and co-driver's doors move down and whether the turn signals flash.

The remote control unlocks the driver's door and/or all doors centrally. If programmed as a factory setting, it locks the following centrally:

- the driver's and co-driver's door
- the sliding doors
- the rear doors

ℹ

If the driver's or co-driver's door is not completely closed, the respective door is not locked.

If one sliding door or rear door is not completely closed, all doors of the load compartment are not locked.

The remote keyless entry transmitter will not function when there is a vehicle key inserted in the ignition lock.

Warning

Do not leave children unsupervised in the vehicle, even if they are secured by a child restraint system.

The children could:

- injure themselves on parts of the vehicle
- unlock the door on vehicles with an electric sliding door by pressing the central locking button, and then open the doors and thereby injure other persons
- get out of the vehicle and could either injure themselves when doing so or they could be injured by passing vehicles
- be severely or even fatally injured by prolonged exposure to intense heat

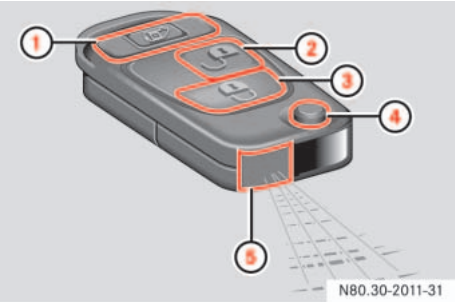

Remote control with key

① To unlock the sliding doors and rear doors and opens or closes the electric sliding door*
② Unlocking button
③ Locking button
④ Release button for mechanical key
⑤ Battery check lamp.

Do not expose the key to high levels of electromagnetic radiation, otherwise this may interfere with the functions of the key.

Protect the key from moisture to prevent malfunctions.

To prevent theft, only use the remote control in the immediate vicinity of the vehicle.
In an emergency, the driver's door and rear door can also be unlocked manually using the key.

As a precaution, both remote controls should always be carried.

Checking the batteries

▶ Press the or button for longer than 2 seconds.

The battery check lamp ⑤ comes on briefly to indicate that the remote control batteries are in order.

Change the batteries immediately if the lamp does not light up briefly during check (▷ page 315).

If the batteries are checked within signal range of the vehicle, pressing the or button will lock or unlock the vehicle accordingly.

Locking and unlocking the vehicle with the remote control

Unlocking the driver's door

▶ Press the button.

The turn signals flash once.

The anti-theft alarm system (ATA)* is deactivated.

ℹ

If you unlock the vehicle using the key and do not open a door within 40 seconds, the vehicle locks again automatically.

Unlocking the vehicle centrally

▶ Unlock the driver's door.

▶ Press the button within 2 seconds again.

The turn signals flash once.

Locking the vehicle centrally

▶ Press the button.

The turn signals flash three times if:

- the drive authorization system or the anti-theft alarm system (ATA)* is activated
- all the doors are closed

ℹ

Make sure that the locking knobs have dropped down.

*Unlocking the sliding doors and the rear door**

When the vehicle is locked, the button can only be used to unlock the sliding doors and the rear door.

▶ Press the button.

The turn signals flash once.

Opening the electric sliding doors

▶ Press and hold the button.

The turn signals flash once.

Locking and unlocking the vehicle with the key

If the doors can no longer be locked or unlocked with the remote control, you can lock and unlock the driver's door and the rear doors with the key.

Unlocking the vehicle

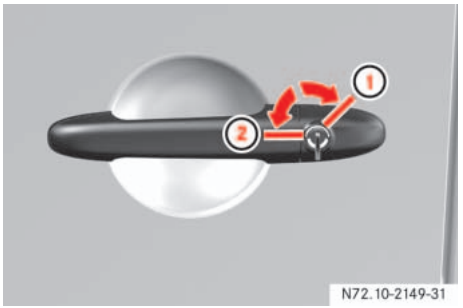

Driver's door

① To lock
② To unlock

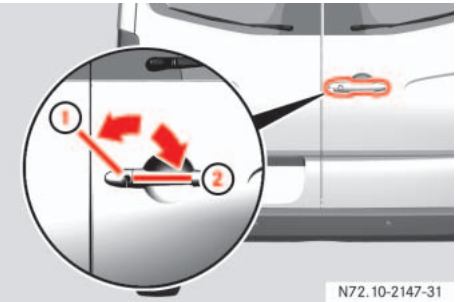

Rear door

① To lock
② To unlock

▶ Insert the key all the way into the door lock and turn it in direction ②.

The door is unlocked.

ℹ

The anti-theft alarm system (ATA) is triggered when you open the vehicle using the key.

The alarm can be disabled in the following ways:

▶ Press the 🔓 button on the remote control.

or

▶ Insert the key into the ignition lock.

Locking the vehicle

Only the driver's door and the rear doors can be locked with the key.

▶ For all other doors, press the locking knob down.

▶ Close the doors.

The doors are locked.

▶ Insert the key all the way into the rear door lock and turn it to the left.

The rear doors are locked.

▶ Insert the key all the way into the driver's door lock and turn it to the right.

The driver's door is locked.

Opening the driver's or co-driver's door from the inside

You can open the driver's / co-driver's door from the inside at any time, even if it is locked.

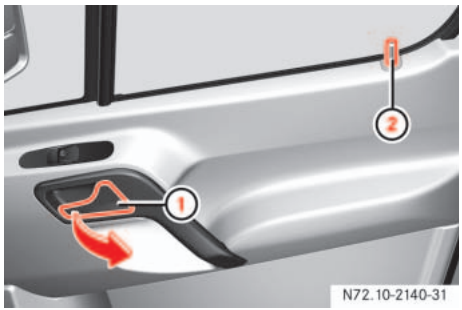

① Inside door handle
② Locking knob

▶ Pull door handle ①.

The door opens.

Sliding door

Warning

If the vehicle is parked on an incline, the sliding door may move of its own accord if it is open but not engaged. You or others could be trapped.

Make sure that the sliding door is engaged in the active retainer.

The sliding door is equipped with an active retainer, which engages the door at the end stop when opened.
Always make sure that the open sliding door is correctly engaged in the detent.

To open the sliding door, it is necessary to pull the outside door handle first, or press the button on the inside handle, to release the sliding door from its detent.

When you open / close the sliding door, you can also detent it around half way so that it is not always necessary to open the door to the end stop to get in and out of the vehicle. The intermediate detent does not fully engage the sliding door.

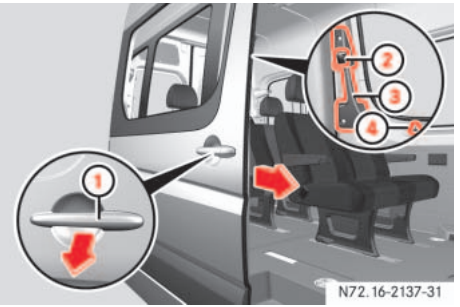

① Outside door handle
② Button
③ Inside door handle
④ Locking knob

Opening / closing the sliding door from the outside

- **To open:** pull door handle ① to open the sliding door.
- Hold door handle ① and slide the sliding door towards the rear as far as the stop.
- **To close:** pull door handle ①, to release the sliding door from its detent and, holding door handle ①, pull the door firmly towards the front until it engages.

Opening / closing the sliding door from the inside

- **To unlock:** pull locking knob ④ up.

  Only this sliding door unlocks. The other doors remain locked.
- **To open:** press button ② to open the unlocked sliding door.
- Hold door handle ③ and slide the sliding door towards the rear as far as the stop.

- **To close:** press button ② to release the sliding door from its detent and, holding door handle ③, pull the door firmly towards the front until it engages.
- **To lock:** press locking knob ④ down.

  Only this sliding door is locked.

Electric closing aid*

Your vehicle may be equipped with an electric closing aid.

The electric closing aid helps you to close the sliding door. Closing the door does not require as much effort.

Electric sliding door*

Depending on the vehicle's equipment, there are electric sliding doors on the left and / or right-hand side.

You can operate the electric sliding door as follows:

- Switch on the center console
- Switch in the doorway
- Inside door handle
- Outside door handle
- Remote control

ℹ

Following a battery disconnection or malfunction, it is necessary to fully close the sliding door once by pressing and holding the switch on the center console or in the doorway (▷ page 57) and then to fully open and close the door once by pressing one of the switches briefly. This restores normal operation of the sliding door.

Opening / closing using the switch

Observe the notes on anti-trap protection (▷ page 60).

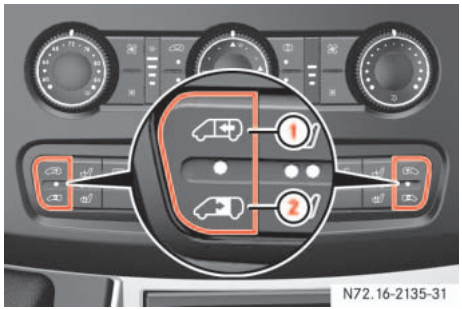

Sliding door switch on the center console

① To close the sliding door / to program the key (▷ page 59)
② To open the sliding door

Sliding door switch in the doorway

③ To open / close the sliding door

> ℹ
> On vehicles with a partition, the switch is located on the partition near the doorway level with the inside door handle.

▶ **To open the sliding door:** briefly press lower part ② of the switch on the center console.

▶ The indicator lamp in the switch flashes. The sliding door unlocks and opens, and a signal sounds.

or

▶ Briefly press switch ③ in the doorway.

The sliding door unlocks.

▶ Briefly press switch ③ in the doorway again.

The indicator lamp in the switch flashes. The sliding door opens and a signal sounds.

▶ **To close the sliding door:** briefly press upper part ① of the switch on the center console or briefly press switch ③ in the doorway.

The indicator lamp in the switch flashes. The sliding door closes and a signal sounds.

▶ Press lower/upper part of the switch on the center console or press switch ③ in the doorway.

The sliding door stops.

▶ **To lock the sliding door from inside:** press the locking knob of the sliding door down (▷ page 56).

Proceed as follows in the event of unfavorable operating conditions, e.g. frost, ice or heavy soiling:

▶ **To open the sliding door:** press lower part ② of the switch on the center console or press and hold switch ③ in the doorway.

The indicator lamp in the switch flashes. The sliding door unlocks and opens, and a signal sounds.

▶ **To close the sliding door:** press upper part ① of the switch on the center console or press and hold switch ③ in the doorway.

The indicator lamp in the switch flashes. The sliding door closes and a signal sounds.

▶ Release the switch.

The sliding door stops.

> ℹ
> The indicator lamp in the switch on the center console lights up whenever the sliding door is open.

Opening / closing using the inside and outside door handles

Observe the notes on anti-trap protection (▷ page 60).

① Button

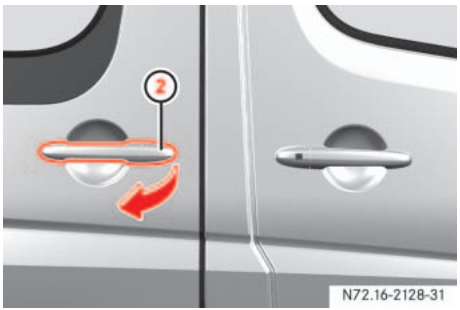

② Outside door handle

▶ Briefly press button ① or pull outside door handle ②.

The sliding door opens or closes and a signal sounds.

▶ Press button ① again or pull outside door handle ② again.

The sliding door stops.

Opening/closing with the remote control

▶ Press and hold the button for more than half a second.

The sliding door unlocks and opens or closes.

▶ Press the button again.

The sliding door stops.

Programming the remote control

If the vehicle is equipped with 2 sliding doors, it is only possible to program the remote control for one of the sliding doors.

① Switch for sliding door on left-hand side

② Switch for sliding door on right-hand side

▶ Make sure that the doors are closed.

▶ Switch on the ignition (▷ page 67).

▶ Press and hold the upper part of relevant switch ① or ② on the center console for 5 seconds.

The indicator lamp in the switch for the sliding door concerned flashes and a warning tone sounds three times as confirmation.

Anti-trap protection

Warning

The anti-trap protection function does not eliminate the possibility of fingers or other parts of the body being trapped against the door frame and therefore does not eliminate the risk of injury.
Always make sure that nobody is within the operating range of the sliding door.

If the sliding door is obstructed during the opening procedure, it moves back in the opposite direction slightly and stops.

If the sliding door is obstructed during the closing procedure, it opens fully again.

The anti-trap protection is programmed to be less sensitive when you press and hold the switch on the center console or the switch in the doorway than when the door opens of its own accord.

Rear doors

You can fix the rear doors in place at an angle of approximately 90° or 270°.

Warning

When you open the rear door:

- there must be sufficient clearance
- make sure that nobody can become trapped

Warning

The rear lamps are concealed by more than 50% when you open the rear doors through 90° or more.
The vehicle is then not sufficiently safeguarded at the rear and may only be seen by other road users when they are close to the vehicle. This could lead to an accident.

Make sure, therefore, that the vehicle is safeguarded at the rear in accordance with national legal requirements, e.g. with a warning triangle.

Opening the right-hand rear door from the outside

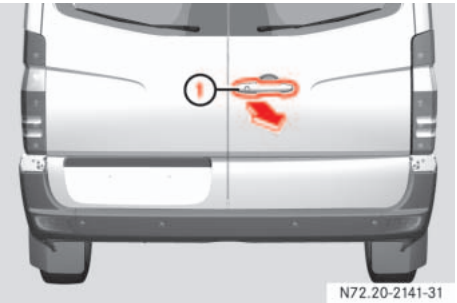

① Handle

▶ Pull handle ①.

▶ Swing the rear door out to the side until it engages.

▶ Always make sure that the open rear door is correctly engaged in the detent.

Opening the left-hand rear door from the outside

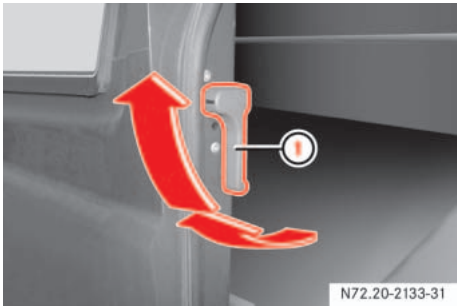

① Release lever

▶ Make sure that the right-hand rear door is open and engaged.

▶ Pull release lever ① in the direction of the arrow.

▶ Swing the rear door out to the side until it engages.

Opening the rear doors to an angle of 270°

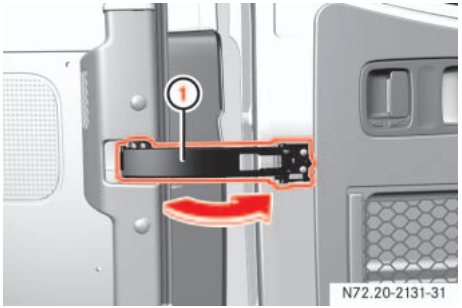

① Door retainer

▶ Open the rear door to an angle of approximately 45°.

▶ Pull door retainer ① in the direction of the arrow and hold it firmly.

▶ Open the rear door beyond 90° so that the door retainer can no longer engage.

▶ Release the door retainer and open the door to an angle of 270°.

Warning ⚠

Make sure that the traffic area is clear when opening the rear doors beyond 90°.
You could otherwise injure yourself and others.

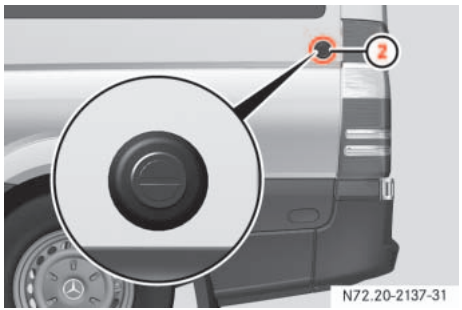

② Magnetic door retainer

▶ With the rear door opened to an angle of 270°, push it against magnetic door retainer ② on the side wall.

When the magnet on the rear door is in contact with magnetic door retainer ②, the rear door is held in this position.

▷▷

If you prefer to keep door retainer ① (▷ page 61) out of the loading area when loading the vehicle, you can swivel it 180° against the spring pressure and onto the door, where it engages. The door retainer then remains in this position and no longer returns to its original position.

Before closing the door, release door retainer ① from the detent and return it to its original position.

Closing the rear doors from outside

Warning

Make sure that nobody can become trapped as you close the rear door.

▶ Close the left-hand rear door firmly from the outside.

▶ Close the right-hand rear door firmly from the outside.

Closing the rear doors from the 90° or 270° position

▶ Pull the door away from the magnetic door retainer if necessary (▷ page 61).

▶ Push the rear door closed firmly from the outside.

▶ The door retainer (▷ page 61) is automatically released from its detent.

Opening / closing the rear door from the inside

The opening lever is on the inside of the right-hand rear door. If a white marking is visible, this indicates that the rear door is unlocked.

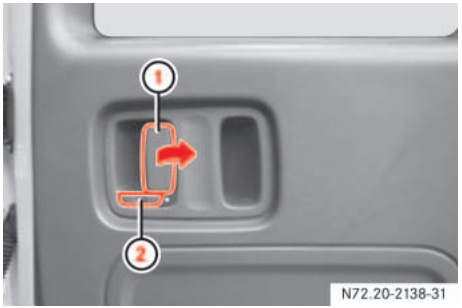

Rear door

① Opening lever
② Catch

▶ **To unlock:** slide catch ② to the left.

You will see a white marking. Only the rear door is unlocked. The other doors remain locked.

▶ **To open:** pull opening lever ① and open the unlocked rear door.

▶ Always make sure that the open rear door is correctly engaged in the detent.

Warning

Make sure that nobody can become trapped as you close the rear door.

- **To close:** make sure that the left-hand rear door is closed.
- Pull the right-hand rear door firmly closed by the door handle.
- **To lock:** slide catch ② to the right. Only the rear door is locked.

  The white marking is no longer visible.

Locking and unlocking centrally from the inside

Using the central locking switch, you can centrally lock or unlock from the inside either the entire vehicle or the sliding doors and rear doors only.

Warning

Do not leave children unsupervised in the vehicle, even if they are secured by a child restraint system. The children could:

- injure themselves on parts of the vehicle
- be severely or even fatally injured by prolonged exposure to intense heat

If the children open a door, they could:

- cause injury to others as a result
- get out of the vehicle and could either injure themselves when doing so or they could be injured by passing vehicles
- sustain serious injuries if they were to fall out of the vehicle, due in particular to the height of the passenger compartment from the ground

The central locking switch is located on the center console.

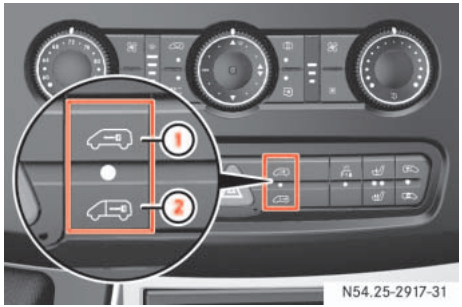

① To lock / unlock the entire vehicle
② To lock / unlock the sliding doors and rear door

If the key is in position **0** or no longer in the ignition lock, the indicator lamp in the central locking switch lights up for 5 seconds after it is pressed. It lights up permanently if the key is in position **1** or **2** in the ignition lock.

The indicator lamp in the central locking switch indicates when the sliding doors and the rear door are locked. You can determine whether the driver's door or co-driver's door is locked or unlocked by the position of the locking knobs.

Locking the entire vehicle

▶ Press upper part ① of the switch when the doors are closed.

The indicator lamp in the switch comes on.

Unlocking the entire vehicle

▶ Press upper part ① of the switch.

The indicator lamp in the switch goes out.

Locking the sliding doors and the rear door

▶ Press lower part ② of the switch when the doors are closed.

The indicator lamp in the switch comes on.

Unlocking the sliding doors and the rear door

▶ Press lower part ② of the switch.

The indicator lamp in the switch goes out.

Automatic locking when driving

All the doors lock automatically above a speed of 9 mph (15 km/h).

You can unlock and open a locked door from the inside at any time.

The central locking switch is located on the center console.

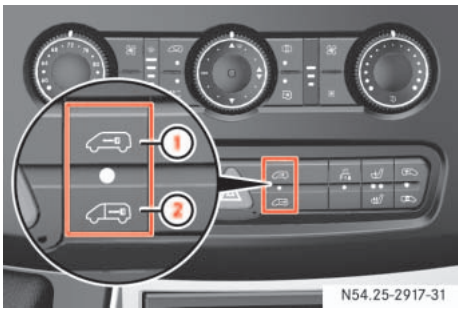

① To lock / unlock the entire vehicle
② To lock / unlock the sliding doors and rear door

! CAUTION

If your vehicle is centrally locked, this could hinder rescue operations from the outside in the event of an accident.

When the automatic locking when driving function is activated, there is a risk of being locked out if the vehicle is pushed or towed.

For this reason, always deactivate the automatic locking when driving function:

- before pushing the vehicle
- before having the vehicle towed
- if you are only leaving the vehicle for a brief period

ℹ

The vehicle is locked automatically if the ignition is switched on and the vehicle is moving (default setting). For information about different settings, please ask your authorized Sprinter Dealer.

ℹ

If activated, automatic locking is deactivated if the vehicle is unlocked or locked using the central locking switch.

Automatic locking is reactivated after the ignition is switched off or a door is opened with the vehicle stationary.

Activating the automatic locking when driving function for the entire vehicle

▶ Close all the doors.

▶ Turn the key to position **1** or **2** in the ignition lock (▷ page 67).

▶ Press upper part ① of the switch. Keep it pressed for approximately 5 seconds.

The indicator lamp in the switch flashes four times.

Deactivating the automatic locking when driving function for the entire vehicle

▶ Close all the doors.

▶ Turn the key to position **1** or **2** in the ignition lock (▷ page 67).

▶ Press upper part ① of the switch. Keep it pressed for approximately 5 seconds.

The indicator lamp in the switch flashes twice.

Activating the automatic locking when driving function for the sliding doors and the rear door

▶ Close all the doors.

▶ Turn the key to position **1** or **2** in the ignition lock (▷ page 67).

▶ Press lower part ② of the switch. Keep it pressed for approximately 5 seconds.

The indicator lamp in the switch flashes four times.

Deactivating the automatic locking when driving function for the sliding doors and the rear door

- ▶ Close all the doors.
- ▶ Turn the key to position **1** or **2** in the ignition lock (▷ page 67).
- ▶ Press lower part ② of the switch. Keep it pressed for approximately 5 seconds.

  The indicator lamp in the switch flashes twice.

Partition sliding door*

The partition sliding door is in the partition between the cab and the load compartment.

Warning ⚠

Make sure that nobody can become trapped as you close the partition sliding door.

Operating the partition sliding door from inside the cab

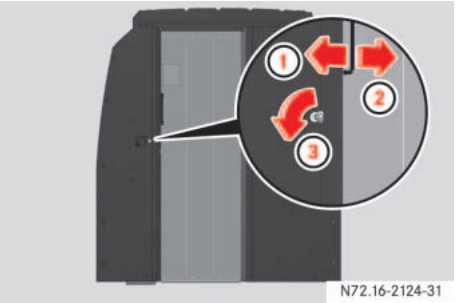

① To close
② To open
③ To unlock

- ▶ **To open:** turn the key counterclockwise ③.

  The sliding door is unlocked.
- ▶ Slide the sliding door to the right as far as the stop ②.
- ▶ **To close:** slide the sliding door to the left until it engages ①.

  The sliding door can be locked using the key.

Operating the partition sliding door from inside the load compartment

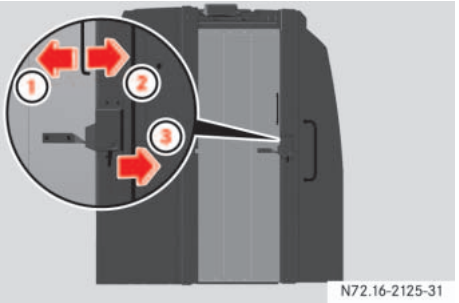

① To open
② To close
③ To unlock

- ▶ **To open:** press the lever to the right ③.

  The sliding door is unlocked.
- ▶ Slide the sliding door to the left as far as the stop ①.
- ▶ **To close:** slide the sliding door to the right until it engages ②.

▼ Key positions

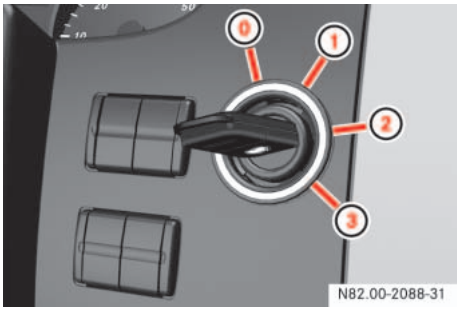

0 To remove the key, to lock the steering wheel

1 To unlock the steering wheel (power supply for some consumers, e.g. radio)

2 To switch on the ignition (power supply for all consumers)
Preglow[1] and drive position

3 To start

The key can only be removed from position **0**. Also observe the notes in the “Driving and parking” section (▷ page 110).

To unlock the steering, turn the steering wheel slightly while turning the key to position **1**.

On vehicles with a battery isolating switch, you must first switch on the electrical system (▷ page 198).

1 Only vehicles with a diesel engine

Driver's and co-driver's seats

Warning

Only adjust the seats when the vehicle is stationary and the handbrake is applied. You could otherwise lose control of the vehicle as a result of the seat moving and cause an accident.

Warning

Make sure that nobody can become trapped as the seat is adjusted. Never place your hands under the seat or near to moving parts.

Your seat must be adjusted in such a way that you can wear the seat belt correctly (▷ page 27).

Observe the following points:

- Position the backrest as vertically as possible and sit upright.
- Avoid seat positions that do not allow the seat belt to be routed correctly. The shoulder section of the seat belt must be routed across the middle of your shoulder and must fit closely across your chest. The lap section of the belt must be routed as low as possible across your pelvic area, i.e. across your hip joints. Never drive with the backrest tilted too far back.
- Your arms should be slightly bent when you are holding the steering wheel.
- The distance from the pedals should be such that you can depress them fully.
- Adjust the head restraint in such a way that the upper edge of the head restraint is level with your head.
- Make sure that you hear the seat engage. Otherwise, the seat is not correctly locked in place.

Injuries may be caused if these notes are not observed.

Warning

Avoid seat positions in which you cannot wear your seat belt correctly. They are a safety hazard and must therefore be avoided.

Standard, comfort* and suspension seats*

① Seat fore-and-aft adjustment
② Lumbar support adjustment
③ Backrest adjustment
④ Seat height adjustment
⑤ Seat angle adjustment
⑥ Seat suspension adjustment
⑦ Vertical lock lever

Different settings are possible, depending on the seat version.

Seat fore-and-aft adjustment

▶ Pull lever ① up.

▶ Slide the seat forwards or backwards until you can reach the pedals and depress them.

▶ Release lever ①.

▶ Slide the seat forwards or backwards slightly until it engages audibly.

Backrest adjustment

▶ Turn thumbwheel ③ forward.

The backrest moves to an upright position.

▶ Turn thumbwheel ③ backward.

The backrest tilts towards the rear.

Seat height adjustment

▶ Push or pull lever ④ repeatedly until you have reached the desired seat height.

Seat angle adjustment*

▶ Turn thumbwheel ⑤ forward.

The front of the seat cushion tilts down.

▶ Turn thumbwheel ⑤ backward.

The front of the seat cushion tilts up.

Lumbar support adjustment*

Using the lumbar support, you can increase the level of support that the backrest provides to your spinal column.

When the lumbar support is correctly adjusted, it reduces strain on your back while you are driving.

▶ Turn thumbwheel ② upward.

This increases the support provided to your lumbar region.

▶ Turn thumbwheel ② downward.

This reduces the support provided to your lumbar region.

*Seat suspension adjustment**

The seat suspension must be adjusted to your body weight.

- ▶ Relieve the load on the seat.
- ▶ Select your body weight 88 to 165 lbs (40 to 120 kg) using thumbwheel ⑥ for optimal seat suspension.

  The seat suspension becomes harder as the load on the seat increases.

*Vertical lock**

If the seat bounces up and down frequently, you can engage the seat in its lowest position.

- ▶ Turn lever ⑦ downward.

  The next time the seat bounces, it will engage in its lowest position.
- ▶ Turn lever ⑦ upward to release the seat from the vertical lock.

  The seat can now move up and down again.

Swivelling front seats*

Warning

Only adjust the seats when the vehicle is stationary and the handbrake is applied. You could otherwise lose control of the vehicle as a result of the seat moving and cause an accident.

Warning

The driver's and co-driver's seat must be adjusted and properly engaged in the direction of travel for driving. Otherwise you will not be able to operate the vehicle safely.

The restraint systems in your vehicle will only function as intended when the driver's and co-driver's seat are engaged in the direction of travel.

The driver's and co-driver's seat can be rotated by 180° to be opposite of the direction of travel.

The seats engage in the direction of travel or opposite the direction of travel as well as at 50° pointing towards the exit.

! When rotating the seats, make sure there is sufficient space. If necessary, move the seat fore or aft to avoid colliding with adjacent add-on parts.
Fold the handbrake lever down as far as it will go. You could otherwise damage the handbrake or the handbrake lever.

ⓘ Move the co-driver's seat forward as far as it will go before rotating it (▷ page 69).

- ▶ Make sure the handbrake is applied and the handbrake lever is folded down as far as it will go (▷ page 115).
- ▶ Set the steering wheel so that there is sufficient clearance for turning and adjusting the driver's seat (▷ page 76).

Warning

Make sure nobody can become trapped when unlocking and turning the seats. Never hold your hands under the seat or near moveable parts when turning the seats.

The seat release lever is located behind the seat between the seat backrest and the seat base.

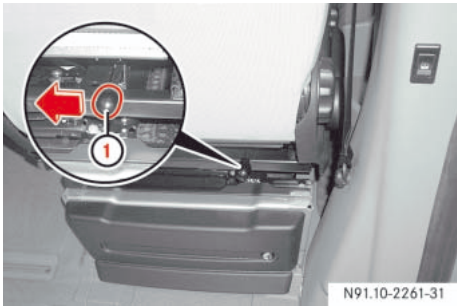

Co-driver's seat

① Lever

▶ Press lever ① on the back of the seat to the middle and turn the seat slightly inwards.

▶ The turning device is unlocked.

▶ Release lever ① again.

▶ Turn the seat inwards to the desired position.

Warning

You could knock yourself against the unprotected pivoting frame if the seat is opposite of the direction of travel and pushed right back in a longitudinal direction.

Therefore, center the seat above the seat base whenever you leave it. Point out this danger to passengers.

Twin co-driver's seat*

ℹ

The twin co-driver's seat does not provide the same level of comfort as the driver's and co-driver's seats.

There is only restricted seat width and legroom.

Folding the seat cushion forward

① To release from the front anchorage
② To release from the rear anchorage

▶ Lift the seat cushion out of front anchorage ①.

▶ Pull the seat cushion towards the front slightly and out of rear anchorage ②.

▶ Fold the seat cushion up by the rear edge.

ℹ

You can store various articles in the space under the twin co-driver's seat.

Positioning the seat cushion

- ▶ Fold the seat cushion back.
- ▶ Slide the seat cushion under the backrest and into rear anchorage ②.
- ▶ Fold the seat cushion down.
- ▶ Press the front of the seat cushion down until it engages in front anchorage ①.

Armrests*

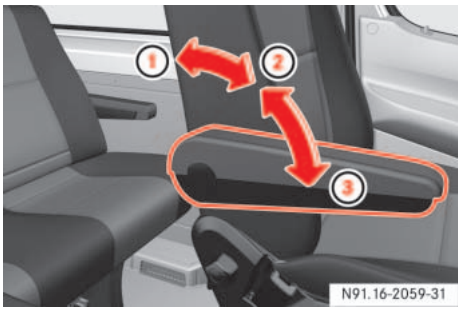

① To fold up the armrest
② To unlock the armrest
③ To move the armrest to the desired position

Adjusting the armrest angle

- ▶ Fold the armrest up by an angle of more than 45° to unlock it ②.
- ▶ Fold the armrest forward to the stop ③. There are six closely spaced positions in which the armrest can engage if you raise it.

Folding up the armrest

- ▶ If you do not wish to use the armrest, fold it up by an angle of more than 90° ①.

Head restraints

Warning ⚠

Only drive with the head restraints installed. You could otherwise suffer serious or fatal injuries in the area of the upper spinal column.

Adjust the head restraint in such a way that the upper edge of the head restraint is level with your head.

Adjust your head restraint so that when your head is relaxed the back of your head is as close as possible to the head restraint. This will support your head effectively in an accident. The head restraint must be engaged in a detent.

Adjusting the head restraint

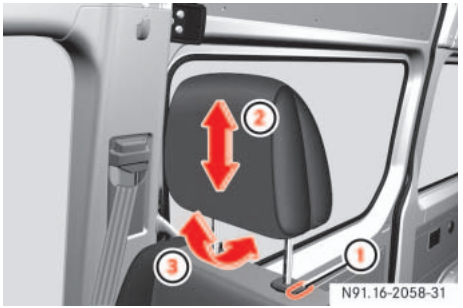

① Release button
② Height adjustment
③ Angle adjustment (comfort head restraint)

- ▶ **To raise:** pull the head restraint up to the desired position.
- ▶ **To lower:** press release button ① and slide the head restraint down to the desired position.
- ▶ **To adjust the angle:** hold the head restraint by the lower edge and fold it to the desired position.

Removing the head restraints

▶ Pull the head restraint up as far as it will go.

▶ Press release button ① and pull the head restraint out.

Installing the head restraints

! CAUTION

Make sure that the head restraint is reinstalled in such a way that its front faces in the direction of travel (comfort head restraint).

▶ Insert the head restraint so that the rod with the notches is in the direction of travel on the left.

▶ Push the head restraint down until it engages.

Seat heating*

The switches for the driver's and co-driver's seat are on the center console.

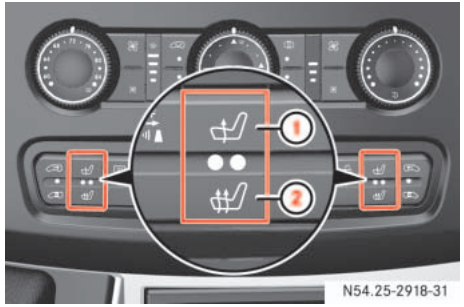

① Normal heating
② Rapid heating

▶ Switch on the ignition (▷ page 67).

Normal heating

▶ **To switch on:** press upper part of the switch.

An indicator lamp in the switch comes on.

▶ **To switch off:** press upper part of the switch again.

The indicator lamp in the switch goes out.

Rapid heating

▶ **To switch on:** press lower part of the switch.

Both indicator lamps in the switch come on.

▶ **To switch off:** press lower part of the switch again.

The indicator lamps in the switch go out.

▶ **To switch down to normal heating:** press upper part of the switch.

ℹ

The seat heating switches automatically to normal heating mode after approximately 5 minutes.

Only one indicator lamp in the switch remains lit.

Folding seat*

The folding seat is on the co-driver's side.

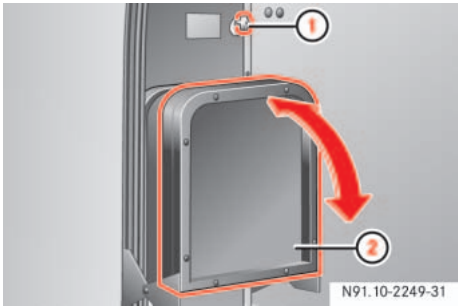

Folding seat next to the partition sliding door

① Key for partition sliding door
② Seat cushion

Warning

When folding down the seat cushion, make sure that nobody can become trapped.

The risk of injury to the co-driver is increased in the event of sudden steering movements or an accident if there is a key inserted in the partition sliding door lock.

Remove the key from the partition sliding door before using the folding seat.

▶ Remove key ① from partition sliding door.

▶ Fold seat cushion ② down or up.

The seat cushion is held in the relevant position.

Rear bench seat

Warning

All release levers on the legs of the rear bench seat must be parallel to the vehicle floor. A rear bench seat with 2 seats may only be installed left-sided.
You can obtain information from any authorized Sprinter dealer.

The integrated seat belt can only offer the degree of protection for which it is designed if you install the specified rear bench seats correctly.

Keep the seat bench mounting cups in the vehicle floor free from dirt and foreign objects. This is the only way to guarantee that the locking mechanisms will engage securely.

For reasons of safety, only have seat mounting cups retrofitted at an authorized Sprinter dealer.

ℹ

Do not exceed the maximum permissible number of seats for passenger vans.

Removing the rear bench seat

The locking lever is located underneath the bench seat, on the feet of the bench seat.

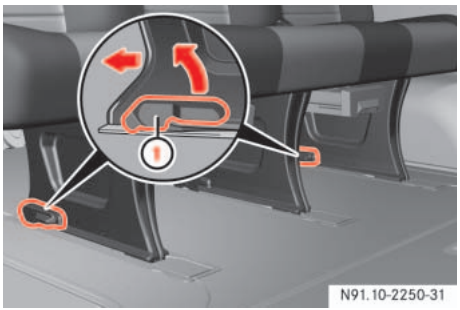

① Lever

▶ Turn all levers ① for the bench seat fully upward.

The rear bench seat moves back into the seat mounting cups on the vehicle floor.

▶ Lift the rear bench seat upward out of the seat mounting cups.

Installing the rear bench seat

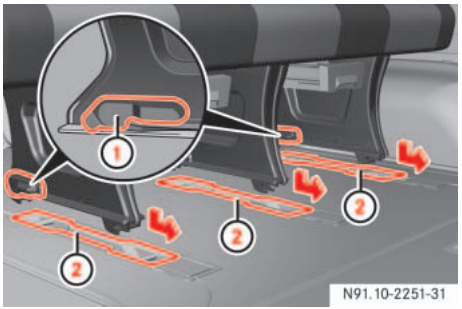

① Lever
② Seat mounting cups

▶ Observe the specified installation location for the rear bench seat.

A rear bench seat with 2 seats may only be installed left-sided.

▶ Check seat mounting cups ② on the vehicle floor.

Seat mounting cups ② must be kept free from dirt and foreign objects.

▶ Position the rear bench seat in the direction of travel in respective seat mounting cups ②.

▶ Slide the rear bench seat forward until you hear the locking mechanisms engage.

▶ Check levers ① on the bench seat feet.

All levers ① must be parallel to the vehicle floor.

▼ Steering wheel adjustment

Warning ⚠

Only adjust the steering wheel when the vehicle is stationary. Only drive with the steering wheel locked in position.

An incorrectly secured steering wheel could make it more difficult to steer the vehicle safely, since the height and fore-and-aft adjustment could move out of position when the steering wheel is turned. You could lose control of the vehicle as a result, cause an accident and injure yourself and others.

Warning ⚠

Never leave children unsupervised in the vehicle. They could become trapped if they try to adjust the steering column.

The lever for adjusting the steering column is under the steering wheel.

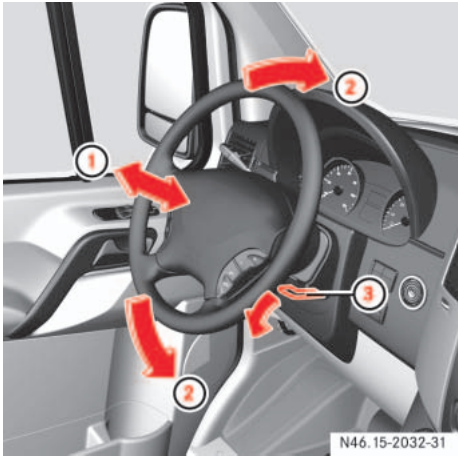

① Steering column fore-and-aft adjustment
② Steering column height
③ Lever

▶ Swing lever ③ down to the stop.

The steering wheel is unlocked.

▶ Move the steering wheel to the desired position.

▶ Pull lever ③ up to the stop.

The steering wheel is locked again.

Legal requirements may impose variations in certain countries.

If you are traveling in countries where vehicles are driven on the opposite side of the road to that in which the vehicle is registered, you must have the headlamps:

- partially masked (halogen headlamps)
- switched over (bi-xenon headlamps)

You will find further information in the "Operation" section (▷ page 180).

Light switch

The light switch is located between the driver's door and the steering wheel.

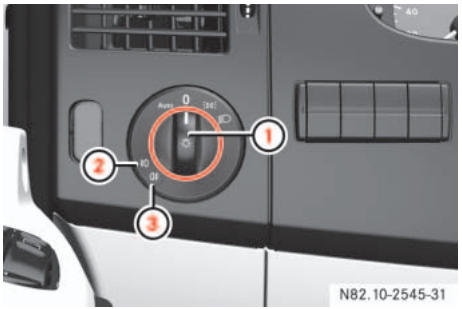

① Light switch
② Front foglamp* indicator lamp
③ Rear foglamp indicator lamp

AUTO	Automatic headlamp control*
0	Lights off
	Parking lamps, license plate and instrument lighting on
	Low-beam headlamps on

Switching on the low-beam headlamps

▶ Turn light switch to .

The indicator lamp in the instrument cluster lights up.

Switching on the high-beam headlamps

The combination switch is located on the left of the steering wheel.

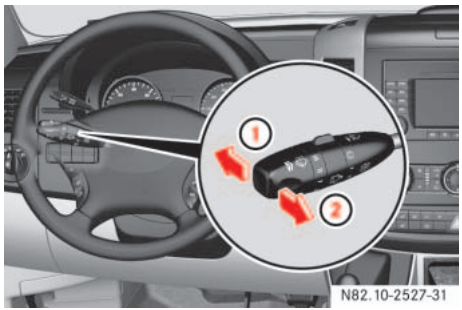

① High-beam headlamps
② Headlamp flasher

- ▶ Turn key to position **1** in ignition lock (▷ page 67).
- ▶ Turn light switch to ≣D.
- ▶ Press combination switch forward ①.

  The indicator lamp ≣D in the instrument cluster lights up.

Headlamp flasher

- ▶ Turn key to position **1** in ignition lock (▷ page 67).
- ▶ Pull combination switch briefly in direction ②.

Constant headlamp mode*

On vehicles with steering wheel buttons, you can set constant headlamp mode (▷ page 102). This does not apply to countries in which there is a legal requirement to use constant headlamp mode.

- ▶ Turn light switch to **0**.
  The low-beam headlamps, parking lamps and license plate lamp are switched on when the engine is running.

  The ≣D indicator lamp in the instrument cluster lights up.

Automatic headlamp control*

The parking lamps, low-beam headlamps and license plate lamp are switched on automatically when the brightness of ambient light falls below a predetermined level.

Warning ⚠

If the light switch is at **AUTO**:

- the headlamps could switch off temporarily due to extreme glare, e.g. from oncoming traffic
- the lights do not switch on automatically in foggy conditions

Set the light switch to ≣D. Otherwise you are endangering yourself and others.

If it is dark, only turn the light switch from **AUTO** to ≣D when the vehicle is stationary. You could otherwise cause an accident if the headlamps were to switch off briefly.

Automatic headlamp mode is only a driving aid. You are responsible for the vehicle's lighting at all times.

- ▶ Turn light switch to **AUTO**.

  The parking lamps are switched on / off automatically when the key is in position **1** (▷ page 67) in the ignition lock.

  The parking lamps, low-beam headlamps and license plate lamp are switched on / off automatically when the engine is running, depending on the ambient light conditions.

Only use manual headlamp mode when you are driving in countries where driving with the low-beam headlamps switched on is required by law.

- ▶ In this case, turn the light switch to ≣D.

Front foglamps*/rear foglamp

ℹ

Foglamps will operate with the parking lamps and/or the low beam headlamps on. Foglamps should only be used in conjunction with low beam headlamps. Consult your State or Province Motor Vehicle Regulations regarding permissible lamp operation.

ℹ

When the light switch is set to AUTO, you cannot switch on the front or rear foglamps. In this case, turn the light switch to ≡D or ≡DOE.

The light switch is located between the driver's door and the steering wheel.

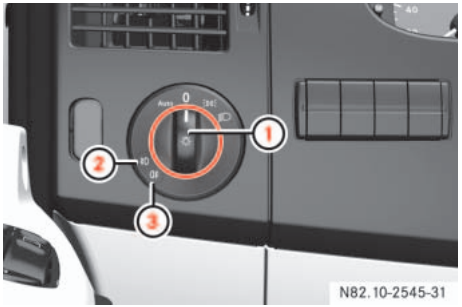

① Light switch
② Front foglamp indicator lamp
③ Rear foglamp indicator lamp

Switching on the front foglamps

▶ Make sure that the parking lamps or low-beam headlamps are switched on.

▶ Pull light switch ① out to the first detent.

The ≡D green indicator lamp next to the light switch comes on.

Switching on the rear foglamp

▶ Make sure that the parking lamps or low-beam headlamps are switched on.

▶ Pull light switch ① out to the second detent.

The 0≡ yellow indicator lamp next to the light switch comes on.

Turn signals

The combination switch is located on the left of the steering wheel.

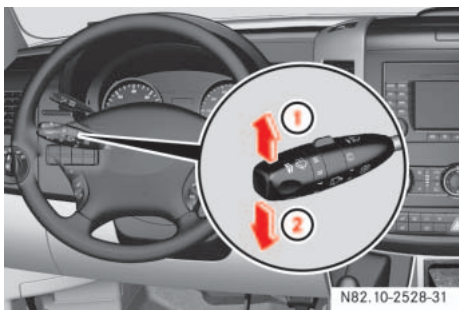

① Right-hand turn signal
② Left-hand turn signal

▶ Push combination switch up ① or down ② until it engages.

The combination switch moves back automatically if the steering wheel is turned sufficiently.

ℹ

To indicate minor directional changes such as changing lanes, press the combination switch only to point of resistance and release. The corresponding turn signals will flash three times.

Hazard warning lamps

The hazard warning lamps still operate if the ignition is switched off and the key is removed.
The switch is located on the center console.

① Hazard warning lamps switch

▶ **To switch on:** press the switch.

All turn signals and the switch flash.

▶ **To switch off:** press the switch again.

Warning ⚠

The rear lamps are concealed when the rear doors are opened 90° (detent position).

The vehicle is then not sufficiently safeguarded at the rear and may only be seen by other road users when they are close to the vehicle. This could lead to an accident.

Make sure, therefore, that the vehicle is safeguarded at the rear in accordance with national legal requirements, e.g. with a warning triangle.

Front interior lighting

Standard front interior lighting

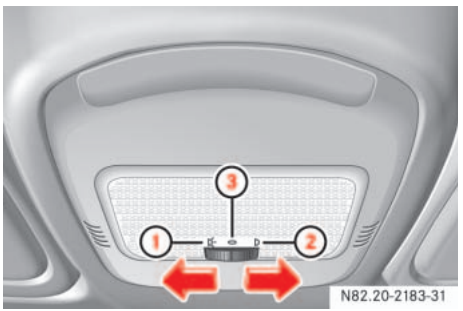

① To switch on the interior lighting
② Automatic control
③ To switch off the interior lighting

Front interior lighting with overhead control panel*

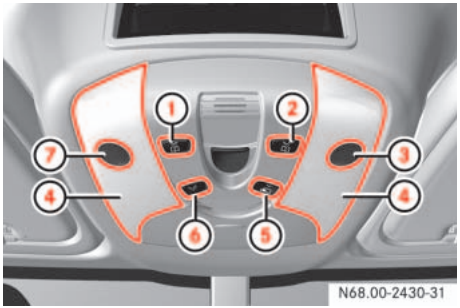

① To switch the left-hand reading lamp on / off
② To switch the right-hand reading lamp on / off
③ Right-hand reading lamp
④ Interior lamp
⑤ To switch automatic control on / off
⑥ To switch the interior lighting on / off
⑦ Left-hand reading lamp

Automatic control

The front interior lighting (but not the rear interior lamps) comes on if you:

- unlock the vehicle
- open a door
- remove the key from the ignition lock

The front interior lighting switches off again automatically.

▶ **To switch off:** press button ⑤.
The interior lighting remains off even if you open a door.

▶ **To switch on:** press button ⑤.

The automatic function is activated. The interior lighting switches on and off again automatically.

ℹ The interior lighting switches off after approximately 20 minutes if it is controlled automatically and if a door remains open.

Manual control

▶ Press button ⑥.
Front interior lamps ④ come on.

▶ Press button ⑥ again.
Front interior lamps ④ switch off.

ℹ If you switch a lamp on manually, it switches off automatically after 20 minutes on vehicles with an overhead control panel.

Switching the reading lamps on / off

▶ Press button ① or ②.
Reading lamp ③ or ⑦ comes on.

▶ Press button ① or ②.
Reading lamp ③ or ⑦ switches off.

ℹ If you switch a reading lamp on manually, it switches off automatically after approximately 20 minutes.

Rear interior lighting

Switching the standard rear interior lighting on / off

On panel vans / crewbuses equipped with the standard rear interior lighting, the switch for the rear interior lighting is on the rear lamp in the load / passenger compartment.

Rear interior lamp with switch

① To switch on the rear interior lighting
② To switch off the rear interior lighting
③ Automatic control

ℹ

The rear interior lamps switch off automatically after 20 minutes if a sliding door or rear door is open.

Switching the convenient rear interior lighting* on/off

On panel vans / crewbuses equipped with the convenient rear interior lighting, the rear interior lighting master control switch is between the steering wheel and the ignition lock.

There is a switch on each rear interior lamp, which can be used to switch the lamp concerned on / off separately, regardless of the position of the master control switch.

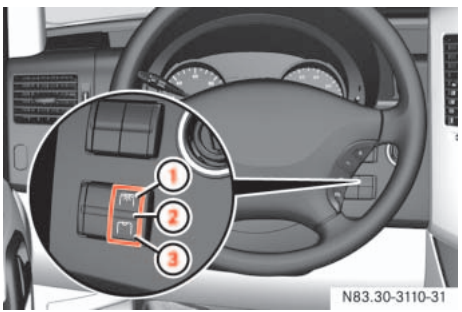

Rear interior lighting master control switch

① To switch on the rear interior lighting
② Automatic control
③ To switch off the rear interior lighting

▶ **To switch on:** press upper part ① of the switch.

The rear interior lamps are switched on when the switches on the rear interior lamps (▷ page 82) are not in Off position ②.

▶ **To switch off:** press lower part ③ of the switch.

All rear interior lamps are switched off regardless of the position of the switch on the rear interior lamp.

Automatic control

▶ **To switch on:** set the rear interior lighting master control switch to position ②.

If the switch on the rear interior lamps (▷ page 82) is set to automatic control ③, the rear interior lamps come on when you:

- open a door
- unlock the vehicle

The rear interior lamps switch off automatically after 20 minutes, even if the switches on the rear interior lamps (▷ page 82) are in the On position ①.

If you wish to reactivate the rear interior lamps, you must:

- open a door
- switch on the ignition again
- set the rear interior lighting master control switch to position ② again.

Load compartment motion detector*

On panel vans equipped with a motion detector in the load compartment, the rear interior lighting may also switch on if motion is detected.

Warning

Motion detectors work with invisible infrared beams emitted by LEDs (Light Emitting Diodes).

Do not view invisible infrared radiation, laser class 1M, directly using optical instruments. Your eyes could otherwise be injured.

If the motion detector detects movement in the load compartment when the vehicle is stationary, the rear interior lighting switches on for approximately 2 minutes. If new movements are detected, the duration resumes from the beginning and the rear interior lighting remains switched on.

The rear interior lighting can be switched on by the motion detector with a delay of no more than 4 seconds if:

- the switch on the rear interior lamp (▷ page 82) is set to “automatic control”
- the vehicle is stationary, the handbrake is applied and the service brake is not applied

  or
- the selector lever is in position **P** and the service brake is not applied
- the vehicle has not been locked from the outside using the key

The motion detector switches off automatically if no change is detected in the vehicle for several hours, e.g. door opened, ignition key turned, etc.

This prevents the battery from discharging.

▼ Instrument cluster

> ℹ
> Do not hang any objects (e.g. coats) in the load compartment. This will help to prevent the motion detector from inadvertently switching on the rear interior lamps.

You will find a full overview of the instrument cluster in the “At a glance” section (▷ page 14).

N54.32-2279-31

Instrument cluster	
①	Vehicles without steering wheel buttons
②	Vehicles with steering wheel buttons*

③	Adjustment buttons
	⊕ button
	⊖ button
	Ⓜ Menu button
	⓪ Reset button
	To check the engine oil level (▷ page 187)

The display in the instrument cluster is activated when you:

- open the driver’s door
- switch on the ignition
- press the ⓪ reset button
- switch on the lights

The display switches off automatically after approximately 30 seconds if:

- there is no vehicle lighting switched on
- the key is in position **0** in the ignition lock (▷ page 67)

Warning

No messages can be displayed if the instrument cluster and / or the display is malfunctioning.

You will not then be able to see information about the vehicle status, such as speed and outside temperature, warning and indicator lamps, malfunction and warning messages or the malfunction of systems. Handling characteristics may be affected.

Contact a qualified specialist workshop immediately which has the necessary specialist knowledge and tools to carry out the work required.
The manufacturer recommends that you use an authorized Sprinter Dealer for this purpose. In particular, work relevant to safety or on safety-related systems must be carried out at a qualified specialist workshop.

Only use adjustment buttons ⊕, ⊖, Ⓜ, ⓪ or ⚲ when traffic conditions permit. You will otherwise be unable to observe road and traffic conditions and could cause an accident.

Do not reach through the steering wheel to press the adjustment buttons. This will make the steering wheel much more difficult to control. Your attention will also be diverted from the road and traffic conditions. This could cause you to lose control of the vehicle and could lead to an accident.

Do not rest your head or chest on the steering wheel or dashboard when operating the adjustment buttons. See the safety precautions for airbags (▷ page 31).

Instrument lighting

With the lights switched on, you can adjust the brightness of the instrument lighting using the ⊕ and ⊖ buttons.

▶ Brighter: press the ⊕ button.

▶ Dimmer: press the ⊖ button.

ⓘ

Vehicles with automatic headlamp mode*:
The instrument lighting also adjusts in line with the automatic headlamp mode.

Tachometer

The red band in the tachometer indicates the engine's overrevving range.

! CAUTION

Do not drive in the overrevving range. Doing so could damage the engine.

To protect the engine, the fuel supply is interrupted when the red band is reached.

Environmental note

Avoid high engine speeds. These could increase your vehicle's fuel consumption unnecessarily and damage the environment through increased pollutant emissions.

Speedometer

ⓘ

In some countries, a signal sounds when the vehicle reaches the maximum speed limit, e.g. at 75 mph (120 km/h).

Fuel gauge

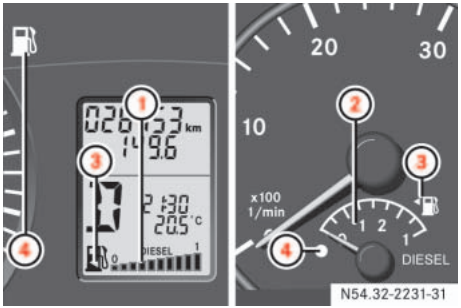

Fuel gauge	
①	Vehicles without steering wheel buttons
②	Vehicles with steering wheel buttons*
③	Fuel filler flap location indicator ◀: The fuel filler cap is on the left-hand side
④	Reserve fuel warning lamp (▷ page 276)

Resetting the trip meter

▶ Vehicles with steering wheel buttons*: Make sure that the display is showing the trip meter (▷ page 93).

▶ Keep reset button ⓪ pressed until the trip meter is set to 0.0.

▼ Operating system without steering wheel buttons

The operating system is activated as soon as you switch on the ignition. You may perform the following using the operating system:

- Call up vehicle information
- Make settings

Warning

Only use adjustment buttons ⊕, ⊖, Ⓜ or ⓪ when traffic conditions permit. You will otherwise be unable to observe road and traffic conditions and could cause an accident.

Do not reach through the steering wheel to press the adjustment buttons. This will make the steering wheel much more difficult to control. Your attention will also be diverted from the road and traffic conditions. This could cause you to lose control of the vehicle and could lead to an accident.

Do not rest your head or chest on the steering wheel or dashboard when operating the adjustment buttons.

See the safety precautions for airbags (▷ page 31).

The operating system shows the information in the display.

You can control the display and the settings in the operating system using the adjustment buttons on the instrument cluster.

Standard display

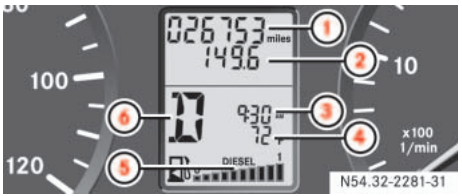

①	Odometer
②	Trip meter
③	Time
④	Outside temperature* or digital speedometer
⑤	Fuel gauge (▷ page 86)
⑥	Selector lever position or current shift range

Changing the standard display

▶ Switch on the ignition (▷ page 67).

▶ Press and hold the Ⓜ menu button for more than 1 second.

The information shown in the display changes from the outside temperature to the digital speedometer.

Outside temperature display*

Warning

Even if the temperature displayed is just above freezing point, the road surface may still be icy, especially in wooded areas or on bridges. You could skid if you do not adopt a suitable driving style. You should therefore always adapt your driving style and speed to suit the weather conditions.

There may be a short delay before a lower outside temperature is displayed, for example after leaving a garage. There may also be a short delay before a rise in the outside temperature is displayed. This prevents you from seeing a temperature display influenced by heat from the engine when the vehicle is stationary or moving slowly.

Menus	
Function	**Page**
Calling up the service due date*	238
Checking the engine oil level	187
Selecting/setting the auxiliary heating switch-on time*	142
Tire pressure monitor	213
Setting the time	88
Setting the date	88

ℹ

To return to the standard display:

- press and hold Ⓜ menu button for more than 1 second
- do not press a button for 10 seconds

The display accepts the changed settings.

Setting the time

▶ Switch on the ignition (▷ page 67).

▶ Press Ⓜ menu button repeatedly until the hours figure flashes.

▶ Set the hour using the ⊕ or ⊖ button.

▶ Press the reset button ⓪.

The minute display flashes.

▶ Set the minutes using the ⊕ or ⊖ button.

ℹ

If you keep the button pressed, the values will change continuously.

Setting the date

▶ Switch on the ignition (▷ page 67).

▶ Press Ⓜ menu button repeatedly until the day flashes.

▶ Set the day using the ⊕ or ⊖ button.

▶ Press ⓪ reset button.

The month display flashes.

▶ Set the month using the ⊕ or ⊖ button.

▶ Press ⓪ reset button.

The year display flashes.

▶ Set the year using the ⊕ or ⊖ button.

ℹ

If you keep the button pressed, the values will change continuously.

▼ Operating system with steering wheel buttons*

The operating system is activated as soon as you switch on the ignition. You may perform the following using the operating system:

- Call up vehicle information
- Make settings

You can use this not only to find out when the next service is due, but also to set the language for messages in the instrument cluster, for example, and much more.

The operating system shows the information in the display.

Warning ⚠

Only use the operating system when road and traffic conditions permit. You will otherwise be unable to observe road and traffic conditions and could cause an accident.

Steering wheel with buttons

You can control the display and the settings in the operating system with the buttons on the steering wheel.

①	Display
	Controlling the operating system
②	Selects a submenu or adjusts the volume
	+ Up / increases the volume
	− Down / decreases the volume
③	Telephone* functions
	Accepts a call/starts dialing
	Ends a call / rejects an incoming call
④	Jumps from one menu to another
	Forward
	Back
⑤	Jumps from one submenu to another
	Forward
	Back

Operating system with steering wheel buttons*

Several functions are combined thematically in the menus.

The display changes when you press one of the buttons on the steering wheel.

For example, the AUDIO menu contains functions for controlling the radio* or CD player*. You can use a function to call up information or to change the settings for the vehicle.

You can think of the order of the menus and of the functions within a menu as a circle:

- If you keep pressing the ⊟ or ⊟ button, each menu will appear one after the other.
- If you keep pressing the △ or ▽ button, each function in the same menu will appear one after the other.

The Settings menu contains submenus instead of functions with which you can call up or change a setting. The way in which you operate these submenus is described in the “Settings menu” section (▷ page 96).

The number of menus depends on the optional equipment installed in your vehicle.

The menus in vehicles with COMAND APS* are described below.

Menu overview

This is what the display looks like when you scroll through the menus.

The explanations for the individual menus are shown in the following table.

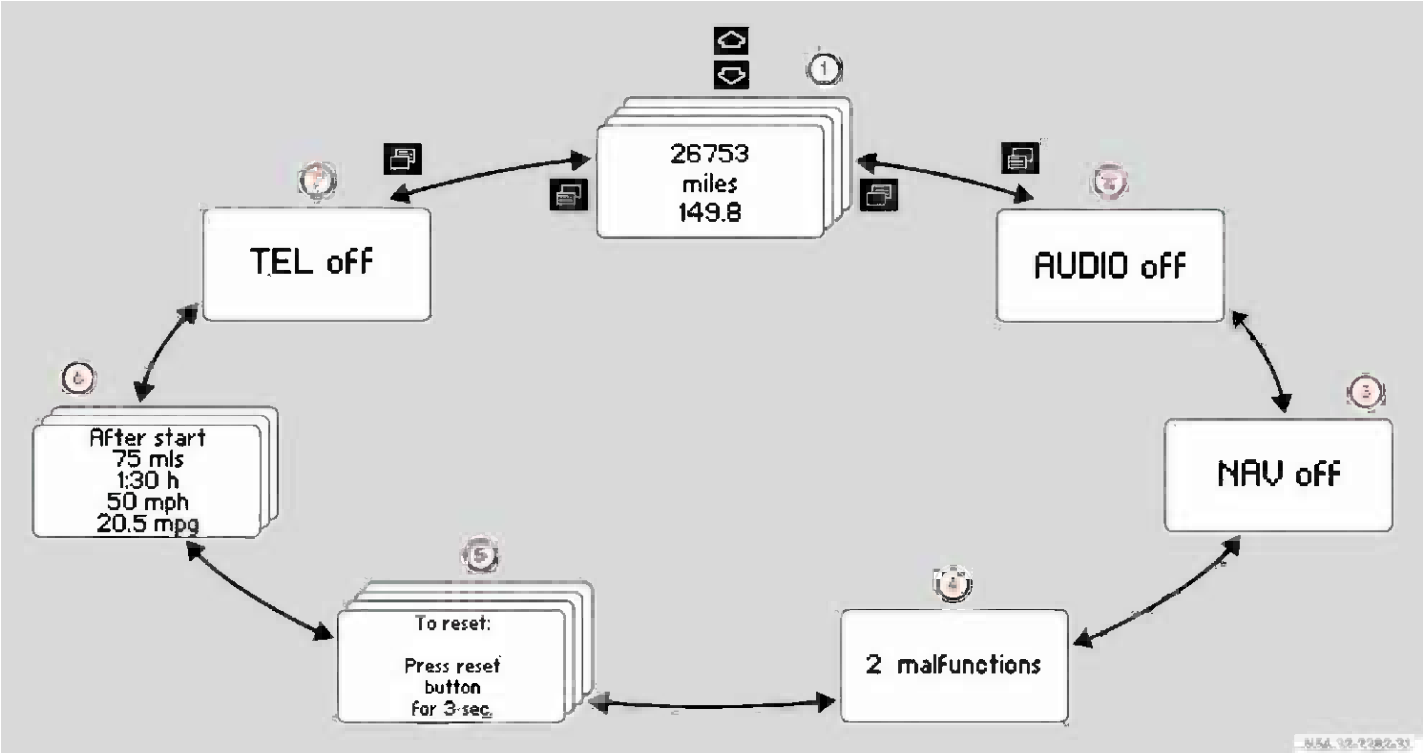

The illustration is an example of the menus on a vehicle with COMAND APS*.

Operating system with steering wheel buttons*

The table below shows the menus and the individual functions.

	Menu ①	Menu ②	Menu ③	Menu ④	Menu ⑤	Menu ⑥	Menu ⑦
	Operation	**Audio***	**Navigation***	**Malfunction memory**	**Settings**	**Trip computer**	**Telephone***
Commands/submenus	Standard display with trip meter and odometer	Select a radio station	Activate route guidance	Display malfunctions	Reset to factory settings	Consumption statistics after start	Enter PIN
	Display coolant temperature	Operate the CD player/ CD changer			Instrument cluster submenu	Consumption statistics after reset	Look for a name in the phone book
	Call up the service due date				Clock/Date submenu		Look for the most recently dialed phone numbers
	Tire pressure monitor				Lighting submenu		
	Check the engine oil level (only on vehicles with a diesel engine)				Vehicle submenu		
					Auxiliary heating* submenu		
					Convenience* submenu		

The tabluar overview of the menus contains generic terms which are not always shown in the operating system. The generic term concerned is intended simply to make it easier for you to familiarize yourself with the menus.

The operating system displays the new function range directly with the first menu function.

With Sound 5/Sound 20, the operating system always shows the AUDIO and TEL (telephone) menus in English.

Operation menu

In the Operation menu, you can select the following functions using the ⌃ or ⌄ button:

Function	Page
Standard display with trip meter and odometer	93
Display coolant temperature	93
Call up the service due date*	238
Tire pressure monitor	213
Check the engine oil level (only on vehicles with a diesel engine)	189

Standard display

In its basic setting, you will see the odometer and the trip meter in the upper part of the display. This is referred to as the standard display.

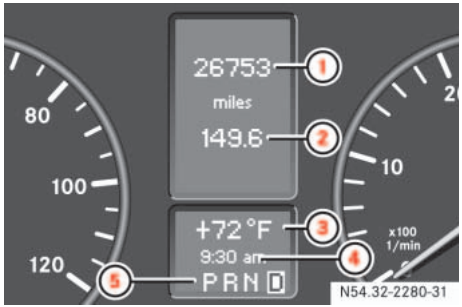

Upper part of the display	
①	Trip meter
②	Odometer
Lower part of the display	
③	Outside temperature* or digital speedometer
④	Time
⑤	Selector lever position or current shift range

▶ If you see a different display, press the ⊟ or ⊟ button repeatedly until the standard display appears.

Displaying the coolant temperature

▶ Press the ⌃ or ⌄ button repeatedly until you see the coolant temperature in the display.

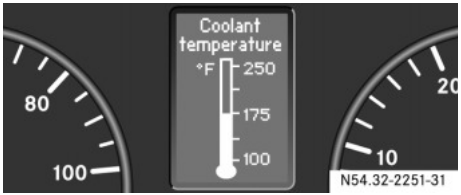

The temperature displayed may climb to 250 °F (120 °C) when the vehicle is being driven in normal conditions and if the coolant contains the correct concentration of corrosion inhibitor and antifreeze. It is acceptable for the coolant temperature to rise to the end of the scale at high outside temperatures and when driving in mountainous terrain.

Audio menu*

You can use the functions in the `Audio` menu to control the audio equipment that you have just switched on.

If no audio equipment is switched on, you will see the `AUDIO off` message (Sound 5 or Sound 20) or `AUDIO off` (COMAND APS*).

Function	Page
Select a radio station	94
Operate the CD player/CD changer	94

Selecting a radio station

▶ Switch on the radio.

See the separate operating instructions.

▶ Press the or button repeatedly until you see the station currently selected.

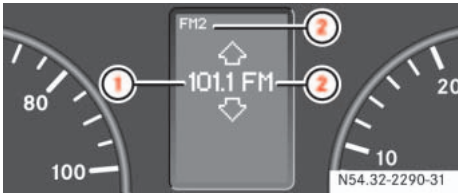

① Reception frequency
② Waveband, with memory location number if set

▶ Press the or button repeatedly until you have found the desired station.

ℹ

It is only possible to save new stations using the radio itself. See the separate operating instructions.

You can also operate the radio in the same way as usual.

Operating the CD player

▶ Switch on the radio and select the CD player.

See the separate operating instructions.

▶ Press the or button repeatedly until the settings for the CD being played are displayed.

① Current CD (with CD changer)
② Current track

▶ Press the or button repeatedly until you have set the desired track.

Malfunction memory menu

The Malfunction memory menu displays malfunctions that may have occurred. The message in the display depends on whether malfunctions have occurred or not.

Warning

The operating system only records and shows malfunctions and warnings from certain systems. Therefore, make sure that your vehicle is safe to use. You could otherwise cause an accident by driving an unsafe vehicle.

▶ Press the or button repeatedly until you see the corresponding malfunction from the malfunction memory in the display.

No malfunctions

The `No malfunctions` message appears if no malfunctions have occurred.

Malfunctions occurred

If malfunctions have occurred, the number of malfunctions will be displayed.

① Number of malfunctions

▶ Press or button.

You can scroll through the malfunctions one by one. The possible malfunctions are described in the “Practical hints” section (▷ page 249).

ℹ The malfunction memory is cleared when you switch off the ignition. If any new malfunctions occur, they will be displayed again.

Settings menu

The Settings menu has two functions:

- the To reset: Press reset button for 3 sec. function, with which you can reset all settings to the factory defaults
- a collection of submenus which you can use to make individual settings for your vehicle

▶ Press the or button repeatedly until you see the Settings menu in the display.

Settings menu

Function	Page
Reset settings	96
Reset the functions of a submenu	97
Submenus in the Settings menu	97
Instrument cluster submenu	99
Clock/Date submenu	101
Lighting submenu	102
Vehicle submenu	104
Auxiliary heating* submenu	142
Convenience* submenu	105

Resetting settings

You can reset the functions in all submenus to the factory defaults.

▶ Press the 0 reset button for approximately 3 seconds.

You will see the message in the display prompting you to press the 0 reset button once more to confirm.

▶ Press 0 reset button again.

The functions in most submenus are reset to the factory defaults.

ℹ

If you do not press the 0 reset button a second time to confirm, the changed settings remain set. The Settings menu is displayed again after approximately 5 seconds.

For safety reasons, it is not possible to reset all of the functions while the vehicle is in motion. For example, the Hdlmp. mode function in the Lighting submenu remains unchanged.

Resetting the functions of a submenu

You can reset the functions of an individual submenu to the factory defaults.

▶ Select a function in a submenu.

▶ Press 0 reset button for approximately 3 seconds.

You will see the message in the display prompting you to press the 0 reset button once more to confirm.

▶ Press 0 reset button again.

Most functions in the submenu are reset to the factory defaults.

ℹ

If you do not press the 0 reset button a second time to confirm, the changed settings remain set. The `Settings` menu is displayed again after approximately 5 seconds.

For safety reasons, it is not possible to reset all of the functions while the vehicle is in motion. For example, the `Hdlmp. mode` function in the `Lighting` submenu remains unchanged.

Submenus in the Settings menu

▶ Press the ⌂ button.

You will see the collection of submenus. There are more submenus than can be displayed at the same time.

▶ Press − button.

The selection marker moves to the next submenu.

The submenus are arranged in a hierarchy; press the − button to scroll down, press the + button to scroll up.

You can select a function within the submenus by pressing the ⌂ button.

The settings themselves are changed by pressing the + or − button again.

This table shows the settings you can make in the individual submenus.

You will find additional information on the following pages.

Operating system with steering wheel buttons*

Instrument cluster (▷ page 99)	Clock/Date (▷ page 101)	Lighting* (▷ page 102)	Vehicle (▷ page 104)	Auxiliary heating* (▷ page 139)	Convenience* (▷ page 105)
Select the unit for the temperature	Set the hours (clock)	Set constant headlamp mode*	Set station selection	Select a switch-on time	Key-dependent settings
Select the unit for the speedometer	Set the minutes (clock)	Switch the locator lighting on or off*	Set the windshield wiper sensitivity	Hours (set a switch-on time)	
Select the unit for the odometer	Select the time format	Switch the exterior lighting delayed switch-off on or off*		Minutes (set a switch-on time)	
Select the language	Set the day (date)				
Select the display for the status line	Set the month (date)				
Select the unit for the tire pressure	Set the year (date)				

Instrument cluster submenu

You can reach the Inst. cluster submenu via the Settings menu (▷ page 96).

Function	Page
Select the unit for the temperature	99
Select the unit for the speedometer and odometer	99
Select the language	100
Select the display for the status line	100

Selecting the unit for the temperature

▶ Select the Inst. cluster submenu using the + or − button.

▶ Press the △ or ▽ button repeatedly until you see the Temperat. message in the display.

The current setting is highlighted.

▶ Press the + or − button to select the unit for all messages in the display: °C (degrees Celsius) or °F (degrees Fahrenheit).

Selecting the unit for the speedometer

▶ Select the Inst. cluster submenu using the + or − button.

▶ Press the △ or ▽ button repeatedly until you see the Dig. speedo. message in the display.

The current setting is highlighted.

▶ Press the + or − button to select the unit for all messages in the display: km/h or mph (kilometers or miles per hour).

Selecting the unit for the odometer

▶ Select the Inst. cluster submenu using the + or − button.

▶ Press the △ or ▽ button repeatedly until you see the Trip message in the display.

The current setting is highlighted.

▶ Press the + or − button to select the unit for all messages in the display: km (kilometers) or miles.

Selecting the language

▶ Select the `Inst. cluster` submenu using the + or − button.

▶ Press the ⇧ or ⇩ button repeatedly until you see the `Language` message in the display.

The current setting is highlighted.

▶ Use the + or − button to select the language in which the operating system messages are to be displayed.

You can select:

- German (Deutsch)
- British English
- American English
- French
- Italian
- Spanish

Selecting the display for the status line

▶ Select the `Inst. cluster` submenu using the + or − button.

▶ Press the ⇧ or ⇩ button repeatedly until you see the `Select displ.` message in the display.

The current setting is highlighted.

▶ Press the + or − button to select whether to display the outside temperature or the speed.

The selected display is then shown permanently in the bottom part of the display.

Selecting the unit for the tire pressure

▶ Select the `Inst. cluster` submenu using the + or − button.

▶ Press the ⇧ or ⇩ button repeatedly until you see the `Tire pres.` message in the display.

The current setting is highlighted.

▶ Press the + or − button to select the unit for the tire pressure: `bar` or `psi`.

Clock/Date submenu

You can reach the Clock/Date submenu via the Settings menu (▷ page 96).

> ℹ
>
> The Clock/Date submenu only appears if you do not have COMAND APS* installed.
>
> With COMAND APS*, it is only possible to set the time using the audio system. See the separate operating instructions.

Function	Page
Set the hours (clock)	101
Set the minutes (clock)	101
Select the time format	101
Set the day (date)	102
Set the month (date)	102
Set the year (date)	102

Setting the hours

▶ Select the Clock/Date submenu using the + or − button.

▶ Press the △ or ▽ button repeatedly until you see the Set clock Hours message in the display.

▶ Set the hour by pressing the + or − button.

Setting the minutes

▶ Select the Clock/Date submenu using the + or − button.

▶ Press the △ or ▽ button repeatedly until you see the Set clock Minutes message in the display.

▶ Set the minutes by pressing the + or − button.

Selecting the time format

▶ Select the Clock/Date submenu using the + or − button.

▶ Press the △ or ▽ button repeatedly until you see the 12/24 h message in the display.

The current setting is highlighted.

▶ Use the + or − button to select the 12 h or 24 h clock format.

Setting the day

▶ Select the Clock/Date submenu using the + or − button.

▶ Press the △ or ▽ button repeatedly until you see the Date Day message in the display.

▶ Set the day by pressing the + or − button.

Setting the day

▶ Select the Clock/Date submenu using the + or − button.

▶ Press the △ or ▽ button repeatedly until you see the Date Month message in the display.

▶ Set the month by pressing the + or − button.

Setting the year

▶ Select the Clock/Date submenu using the + or − button.

▶ Press the △ or ▽ button repeatedly until you see the Date Year message in the display.

▶ Set the year by pressing the + or − button.

Lighting submenu*

You can reach the Lighting submenu via the Settings menu (▷ page 96).

Function	Page
Set constant headlamp mode*	102
Switch the locator lighting on or off*	103
Switch the exterior lighting delayed switch-off on or off*	104

*Setting constant headlamp mode**

If you have set constant headlamp mode and the light switch is at 0, the following light up automatically when the engine is running:

- The parking lamps and low-beam headlamps
- The tail lamps
- The license plate lamp

For safety reasons, it is only possible to change this setting when the vehicle is stationary. The factory setting is Constant in countries in which constant headlamp mode is mandatory.

▶ Press the + or − to select the Lighting submenu.

▶ Press the △ or ▽ button repeatedly until you see the Hdlmp. mode message in the display.

The current setting is highlighted.

▶ Press the + or − button to select whether you wish to operate the lighting manually or whether you wish to set constant headlamp mode.

ℹ

For safety reasons, it is not possible to reset the Hdlmp. mode function to the factory setting while the vehicle is in motion. You will see the following message in the display: Setting only possible at standstill

USA only:
If you turn the light switch to ≡DC or ≡D, the corresponding light switches on. Constant headlamp mode remains activated if the light switch is turned to AUTO.

Canada only:
If you turn the light switch to ≡D, the low-beam headlamps are switched on. Constant headlamp mode remains activated if the light switch is turned to ≡DC or AUTO.

*Switching the locator lighting on or off**

If you switch the locator lighting to On, the following lamps light up in the dark after you have unlocked the vehicle using the key:

- The parking lamps
- The tail lamps
- The license plate lamp
- The front foglamps

The locator lighting automatically switches off after 40 seconds or when you:

- open the driver's door
- insert the key into the ignition lock
- lock the vehicle with the key

▶ Press the + or − to select the Lighting submenu.

▶ Press the △ or ▽ button repeatedly until you see the Loc. lighting message in the display.

The current setting is highlighted.

▶ Press the + or − button to switch the locator lighting On or Off.

*Setting the exterior lighting delayed switch-off**

The Headlamps (headlamps delayed switch-off) function enables you to set whether or not the exterior lighting should remain on in the dark after the doors have been closed.

When you have set the delayed switch-off and have switched off the engine, the following light up:

- The parking lamps
- The tail lamps
- The license plate lamp
- The front foglamps

> ⓘ
>
> You can reactivate this function by opening a door within 10 minutes.
>
> The lights are switched off after 60 seconds if you do not open a door or if you close an opened door after the engine has been switched off.

▶ Press the + or − to select the Lighting submenu.

▶ Press the △ or ▽ button repeatedly until you see the Headlamps message in the display.

The current setting is highlighted.

▶ Press the + or − button to select whether and for how long the lights should remain on.

Vehicle submenu

You can reach the Vehicle submenu via the Settings menu (▷ page 96).

Function	Page
Set station selection	104
Set the windshield wiper sensitivity	105

Setting station selection

The Search function enables you to determine whether the radio (▷ page 94) should search for a new station or a previously stored station each time the radio is switched on.

▶ Press the ▭ or ▭ button repeatedly until you see the Vehicle message in the display.

▶ Press the △ or ▽ button repeatedly until you see the Search message in the display.

The current setting is highlighted. ▷▷

▶ Press the + or − button to select how the radio should tune into a station.

- Frequency: The nearest station on the waveband is selected
- Memory: The nearest saved station is selected

Setting the windshield wiper sensitivity

You can use the Wipe sensor function to set the sensitivity of the rain sensor.

▶ Press the ⊟ or ⊟ button repeatedly until you see the Vehicle message in the display.

▶ Press the △ or ▽ button repeatedly until you see the Wipe sensor message in the display.

The current setting is highlighted.

▶ Press the + or − button to select the level of sensitivity of the rain sensor.

- Level 1: High sensitivity

  Wiping beings in light rain
- Level 2: Moderate sensitivity
- Level 3: Low sensitivity

  Wiping only begins in heavy rain

Convenience submenu*

You can reach the Convenience submenu via the Settings menu (▷ page 96).

Key-dependent settings

You can use the Key function to determine whether the settings in the:

- Instrument cluster
- Lighting
- Vehicle

submenus are stored as key-dependent settings.

▶ Press the ⊟ or ⊟ button repeatedly until you see the Convenience message in the display.

▶ Press the △ or ▽ button repeatedly until you see the Key message in the display.

The current setting is highlighted.

▶ Press the + or − button to switch key dependence On or Off.

ℹ

For safety reasons, it is not possible to set the Key function while the vehicle is in motion. You will see the following message in the display: Setting only possible at standstill.

Trip computer menu

The Trip computer menu displays statistical data for your vehicle.

Function	Page
Consumption statistics after start	106
Consumption statistics after reset	107
Reset consumption statistics	107

ℹ

When you call up the trip computer again, it always displays the consumption statistics after start first.

The units of the trip computer are country-specific and depend on the setting in the Instrument submenu of the Settings menu.

Consumption statistics after start

▶ Press the ⊟ or ⊟ button repeatedly until you see the After start message in the display.

① Distance driven since start
② Time elapsed since start
③ Average speed since start
④ Average fuel consumption since start

ℹ

If you turn the key to position **0** in the ignition lock or remove it, all the values are reset after approximately 4 hours.

The values will not be reset if you turn the key back to position **1** or **2** during this time.

Consumption statistics after reset

▶ Press the or button repeatedly until you see the `After start` message in the display.

▶ Press the or button repeatedly until you see the `After reset` message.

① Distance driven since last reset
② Time elapsed since last reset
③ Average speed since last reset
④ Average fuel consumption since last reset

Resetting the consumption statistics

▶ Press the or button repeatedly until you see the `After start` message in the display.

▶ Press the or button repeatedly until you see the statistics that you want to reset in the display.

▶ Press and hold the 0 reset button until the values are reset to 0.

ℹ

The consumption statistics after start are automatically reset after 999 hours or 9,999 miles (kilometers).

The consumption statistics after reset are automatically reset after 9,999 hours or 99,999 miles (kilometers).

Telephone menu*

You can operate your cell phone using the functions in the `TEL` menu, provided it is connected to the manufacturer's hands-free system*.

Warning ⚠

You must observe the legal requirements for the country in which you are driving when operating a cell phone in the vehicle.

If it is permitted to operate a cell phone while the vehicle is in motion, you must only operate it when road and traffic conditions permit. You may otherwise be distracted from the traffic conditions, cause an accident and injure yourself and others.

Cell phones without exterior antennas may interfere with the vehicle electronics and thereby jeopardize the operational safety of the vehicle. You must therefore only use these devices when they are connected to a separate exterior antenna.

▶ Switch on the cell phone and audio system or COMAND APS*.

See the separate operating instructions.

▶ Press the or button repeatedly until you see the TEL menu in the display.

You will see different messages in the display, depending on the status of your cell phone:

- If the cell phone is switched off, you will see the TEL off message (Sound 20) or Tel Turn on message (COMAND APS*) in the display.
- If you have not yet entered a PIN, you will see the TEL PIN message (Sound 20) or Enter PIN message (COMAND APS*).

▶ Enter the PIN code using the cell phone, audio system or COMAND APS*.

The cell phone searches for a network. The display remains blank during this time.

As soon as the cell phone has found a network, you will see the Ready message in the display.

Once it has shown its operational readiness, you can operate the cell phone using the operating system.

Rejecting a call

If you do not wish to speak to the person who is calling, you can reject the call.

▶ Press the button.

The caller then hears the busy signal.

Accepting a call

You can accept a call at any time, provided the cell phone is ready to receive calls.

▶ Press the button.

The call duration is shown in the display.

Ending a call

▶ Press the button.

The display now shows the operational readiness symbol again.

Dialing a number from the phone book

You may select and dial a number from the phone book at any time, provided the cell phone is ready to receive calls.

ℹ

It is only possible to create new phone number entries in the phone book using the cell phone itself. See the separate operating instructions.

▶ Press the or button repeatedly until you see the TEL menu with the operational readiness symbol in the display.

▶ Press the ⇧ or ⇩ button.

The operating system reads the phone book stored on the SIM card or in the phone. This may take more than 1 minute.

You will see the `Processing` message (Sound 20) or `Wait...` message (COMAND APS*) in the display.

▶ Press the ⇧ or ⇩ button repeatedly until you see the name you are looking for.

The stored names are displayed alphabetically from A to Z, or Z to A.

ℹ

The operating system scrolls through the names rapidly if you press and hold the ⇧ or ⇩ button for more than one second. Releasing the button stops the rapid scroll.

If you no longer wish to make a call, press the button.

▶ Press the button.

The operating system dials the selected phone number. You will see the `dialing` message (Sound 20) or `Dialing...` message (COMAND APS*) in the display.

The operating system stores the phone numbers in the redial memory.

If a connection is made, you will see the name of the person you are calling and the call duration.

Redialing

The operating system stores the most recently dialed phone numbers. This means that you do not have to search through the entire phone book.

▶ Press the or button repeatedly until you see the `TEL` menu with the operational readiness symbol in the display.

▶ Press the button.

The redial memory shows the most recently dialed numbers or names.

▶ Press the ⇧ or ⇩ button repeatedly until the number or the name you are looking for is displayed.

▶ Press the button.

The operating system dials the selected phone number.

If a connection is made, you will see the call duration and name of the person you are calling if stored in the phone book. Otherwise, the number you are dialing continues to be displayed.

ℹ

If you no longer wish to make a call, press the button.

▼ Driving and parking

Warning

The movement of the pedals must not be obstructed. The vehicle's operating and road safety are otherwise jeopardized.

Objects could fall and get caught between the pedals if you accelerate or brake suddenly. You will no longer be able to brake or accelerate. You could cause an accident, which could result in injury to yourself and others.

- If floor mats and carpets are used, make sure that these are secured correctly and cannot slip and that there is sufficient pedal clearance.
- Do not place any objects in the driver's footwell.
- Store and secure all loose objects so they cannot get into the driver's footwell while the vehicle is in motion.

Warning

The doors could open of their own accord while the vehicle is in motion if they are not fully closed. For this reason, please make sure that all the doors are properly closed and locked before driving off (▷ page 52).

▶ Before each journey, check the vehicle lighting and the general condition of the vehicle.

▶ Observe the general driving tips at the end of this section (▷ page 116).

You will find information on:

- regular checks (▷ page 181)
- driving in winter (▷ page 235)
- driving when towing a trailer (▷ page 175)
- and other driving tips

in the "Operation" section (▷ page 173).

Starting the engine

Warning

Never run the engine in an enclosed space. The exhaust fumes contain poisonous carbon monoxide. Breathing in exhaust fumes constitutes a health hazard and can lead to loss of consciousness and death.

Warning

A seat belt that is worn incorrectly or not at all, or that is not correctly engaged in the seat belt buckle, cannot perform its intended protective function. In certain circumstances, you could then be seriously or even fatally injured. Make sure, therefore, that all occupants – in particular, expectant mothers – wear their seat belt correctly at all times.

▶ Before starting the engine, make sure that all vehicle occupants are wearing their seat belt correctly (▷ page 27) and the handbrake (▷ page 115) is applied.

! CAUTION

Do not depress the accelerator pedal when starting the engine.

ⓘ

If you depress the brake pedal when starting the engine, pedal travel may be short and the pedal resistance may be high.

Pedal travel and resistance return to normal when you depress the brake pedal again while the engine is running.

Automatic transmission

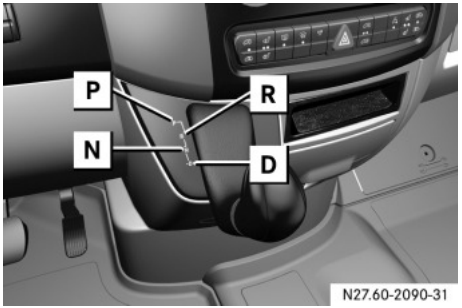

Gearshift pattern

P Parking position (selector lever lock)
R Reverse gear
N Neutral
D Drive position

▶ Make sure that the automatic transmission is in parking position **P** before starting the engine.

ⓘ

It is also possible to start the engine in neutral **N**.

Starting the engine

Gasoline engine

▶ Turn the key to position **3** in the ignition lock (▷ page 67) and release it immediately ("touch-start" function).

The engine starts automatically.

Diesel engine

▶ Switch on the ignition (▷ page 67).

The preglow indicator lamp in the instrument cluster comes on.

▶ As soon as the preglow indicator lamp goes out, turn the key to position **3** in the ignition lock and release it as soon as the engine is running.

ⓘ

You can start the engine without preglow when the engine is warm.

After a cold start

▶ Warm the engine up quickly.

▶ Do not run the engine at full speed until it has reached operating temperature.

Pulling away

Warning ⚠

Do not downshift for additional engine braking on a slippery surface. The drive wheels may lose their grip and the vehicle could skid.

! CAUTION

Only drive at high speeds once the engine has warmed up. This protects the engine.

When driving on slippery surfaces, avoid spinning the drive wheels where possible as this could damage the drive train.

ⓘ

On vehicles with a reverse warning feature*, an audible warning sounds for other road users when reverse gear is engaged (▷ page 153).

ⓘ

Depending on the vehicle's settings, the vehicle automatically locks itself centrally after it has driven off, at the latest (▷ page 64). The locking knobs on the front doors and the sliding door drop down.
You can open the doors from the inside at any time.

You can also switch off the automatic door lock (▷ page 64).

▶ Depress the brake pedal and keep it depressed.

The selector lever lock is released.

▶ Release the handbrake (▷ page 115).

The (P) PARK indicator lamp in the instrument cluster goes out.

! CAUTION

Only select reverse gear when the vehicle is stationary, otherwise you could damage the automatic transmission.

▶ Move the selector lever to position **D** or **R**.

ⓘ

Wait until the gear selection has completed before pulling away.

▶ Release the brake pedal.

▶ Carefully depress the accelerator pedal.

ⓘ

Automatic transmission upshifts are made at higher engine speeds after a cold start. This helps the catalytic converter to reach its operating temperature more quickly.

You will find more information about selector lever positions, shift ranges and driving tips in the “Automatic transmission” section (▷ page 121).

Braking

Warning

There is no power assistance for the service brake when the engine is not running.

You will need to use significantly more force to brake and could therefore lose control of the vehicle and cause an accident.

Never switch off the engine while driving.

Do not accelerate to prevent your vehicle from rolling backwards on an uphill gradient. Instead, you should either use the handbrake or depress the brake pedal. This prevents excessive wear on the clutch.

Select a lower gear (shift range **3**, **2** or **1**) (▷ page 123) in good time on long and steep downhill gradients, especially if towing a trailer. This prevents the brakes from overheating and wearing too rapidly.

It is best not to stop the vehicle immediately after the brakes have been subjected to an extreme load; continue driving for a short time instead. The brakes are cooled down more quickly in the airflow.

The first time the brakes are applied after a long period of driving in heavy rain without braking, it is possible that:

- there will be a delayed braking response
- you will need to depress the brake pedal more firmly

You should therefore maintain a greater distance from the vehicle in front.

Warning

Make sure that other road users are not put at risk by your braking.

Apply the brakes so that you can feel their response after a journey on wet roads, especially if the road has been salted. The brake discs will be warmed, dry more quickly and be protected against corrosion.

If you make only moderate use of the service brake, check from time to time that it is fully functional. To do this, brake more sharply at a higher vehicle speed. The brake will grip better as a result.

For safety reasons, the manufacturer recommends that you only have brake pads/linings installed on your vehicle that have been approved for the Sprinter.

Brake pads/linings that have not been approved for the Sprinter could affect your vehicle's operating safety.

In exceptional cases, the handbrake can be used for emergency braking if the service brake fails (▷ page 115).

Parking

Warning

Only remove the key from the ignition lock when the vehicle is stationary, since it is not possible to steer the vehicle with the key removed.

Always apply the handbrake after parking the vehicle.

Never leave children unsupervised in the vehicle. They could release the handbrake. This could lead to a serious or fatal accident.

Warning

Always switch off the engine and apply the handbrake before leaving the vehicle.

The vehicle could roll away if it is not secured.

On uphill or downhill gradients steeper than 15%:

- apply the handbrake
- secure an unloaded vehicle by chocking the front axle (▷ page 303)
- secure a loaded vehicle by, for example, chocking the rear axle (▷ page 303)

! CAUTION

Whenever you park the vehicle, always remove the key to prevent the battery from excessively discharging.
For vehicles which are out of use for extended periods and have a battery isolating switch*, switch off the electrical system (▷ page 197).

Warning

Make sure that the exhaust system does not come into contact with highly flammable materials, e.g. dry grass or gasoline. The flammable material could otherwise ignite and set vehicle components on fire.

Warning

Regulations in some countries require the parking lamps to be switched on to illuminate the vehicle for other road users if parked on a public road at night. In built-up areas, night reflectors can also be used.

Observe legal requirements.

Handbrake

Warning

Never leave children unsupervised in the vehicle. They could release the handbrake. This could lead to a serious or fatal accident.

The handbrake is located between the driver's seat and the co-driver's seat.

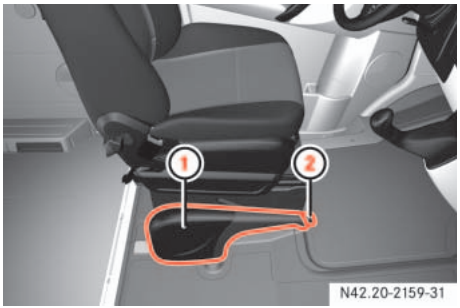

① Lever
② Release knob

! CAUTION
You must only apply the handbrake when the vehicle is stationary.

Applying the handbrake

▶ Pull lever ① up as far as the last detent.
The (P) PARK indicator lamp in the instrument cluster lights up while the engine is running.

ℹ
On vehicles with a folding handbrake lever, you can then press lever ① down to the stop.

Releasing the handbrake

ℹ
On vehicles with a folding handbrake lever, you must first pull lever ① up to the stop.

▶ Raise lever ① slightly and press release knob ②.

▶ Guide lever ① down to the stop.
The (P) PARK indicator lamp in the instrument cluster goes out.

Emergency braking

Normally, you are only permitted to apply the handbrake when the vehicle is stationary.

In exceptional cases, the handbrake can be used for emergency braking if the service brake fails.

▶ Keep release knob ② pressed and carefully apply lever ①.

Warning

The wheels on the rear axle could lock if the handbrake lever is applied too abruptly. The vehicle could then start to skid.

Make sure that you apply the handbrake lever carefully to ensure that braking application is moderated.

Stopping the engine

! CAUTION

If the coolant temperature is raised, e.g. following driving in mountainous terrain, run the engine at idling speed for a further 1 or 2 minutes before you switch off the engine. This allows the coolant temperature to return to normal again.

ⓘ

When parking on steep uphill or downhill gradients, turn the front wheels towards the curb.

- ▶ Apply handbrake (▷ page 115).
- ▶ Move selector lever to **P**.
- ▶ Turn key to position **0** (▷ page 67) in the ignition lock and remove it.

  The immobilizer is activated.

ⓘ

You can only remove the key from the ignition lock when the selector lever is in position **P**.

- ▶ Secure the vehicle at the front axle if unloaded and at the rear axle if loaded, e.g. using a chock (▷ page 303).

General driving tips

Drinking and driving

Warning ⚠

Drinking and driving and/or taking drugs and driving are very dangerous combinations. Even a small amount of alcohol or drugs can affect your reflexes, perceptions and judgment. The possibility of a serious or even fatal accident is sharply increased when you drink or take drugs and drive.

Never drink or take drugs and drive or allow anyone to drive after drinking or taking drugs.

Steering

Warning ⚠

There is no power-steering assistance when the engine is not running.

You will need to use significantly more force to steer and could therefore lose control of the vehicle and cause an accident.

Never switch off the engine while driving.

! CAUTION

Do not hold the steering wheel in its end positions for longer than necessary (e.g. when turning or maneuvering).
The hydraulic pump can be damaged by the increased temperature of the hydraulic fluid.

Overrun cut-off

The gasoline/diesel supply is cut off if the driver's foot is completely removed from the accelerator pedal when the engine is overrunning at engine speeds outside of the idling control range.

Driving in wet conditions

Warning ⚠

The vehicle may hydroplane despite having adequate tire tread depth and being driven at low speeds, depending on the depth of water on the road surface.

For this reason, avoid tire ruts and brake carefully.

Driving on flooded roads

If you are forced to drive on stretches of road on which water has collected, please note that:

- the water level must not reach above the lower edge of the front bumper
- the maximum speed at which you may drive is walking speed

! CAUTION

Note that vehicles in front or oncoming vehicles create waves.

This may mean that the maximum permitted water depth is exceeded. These notes must be observed to avoid the risk of engine damage.

Tires

The tires are particularly important for the operating and road safety of the vehicle. You should therefore check the pressure, tread and condition of the tires on a regular basis.

A tire dealer, a qualified specialist workshop or any authorized Sprinter Dealer will be able to provide further information regarding the:

- list of recommended makes of tire
- tire load-bearing capacity (LI Load Index)
- maximum tire speed (SI Speed Index)
- tire age
- causes and consequences of tire wear
- measures to be taken in the event of tire damage
- tire types for certain regions, areas of operation or conditions of vehicle use
- interchangeability of tires, etc.

Modifications to the brake system or wheels are not permissible, nor is the use of spacer plates or brake dust shields. Any such modifications will invalidate the vehicle’s general operating permit.

Warning

If you feel a sudden significant vibration or ride disturbance, or you suspect that possible damage to your vehicle has occurred, you should turn on the hazard warning flashers, carefully slow down, and drive with caution to an area which is a safe distance from the road.

Inspect the tires and the vehicle undercarriage for possible damage. If the vehicle or tires appear unsafe, have the vehicle towed to the nearest authorized Sprinter Dealer or tire dealer for repairs.

Treadwear indicators (TWI) are required by law. These indicators are located in six places on the tread circumference and become visible at a tread depth of approximately 1/16 in (1.6 mm), at which point the tire is considered worn and should be replaced.

The Treadwear Indicator appears as a solid band across the tread.

Warning

Although the applicable federal motor vehicle safety laws consider a tire to be worn when the Treadwear Indicators (TWI) become visible at approximately 1/16 in (1.6 mm), do not allow your tires to wear down to that level. As tread depth approaches 1/8 in (3 mm) for summer tires or 1/6 in (4 mm) for winter tires, the adhesion properties on a wet road are sharply reduced.

Depending upon the weather and/or road surface (conditions), the tire traction varies widely.

Specified tire inflation pressures must be maintained. This applies particularly if the tires are subject to extreme operating conditions (e.g. high speeds, heavy loads, high ambient temperatures).

Warning

Do not drive with a flat tire. A flat tire affects the ability to steer or brake the vehicle. You may lose control of the vehicle. Continued driving with a flat tire or driving at high speed with a flat tire will cause excessive heat buildup and possibly a fire.

For detailed information on tires, see "Tires and wheels" (▷ page 199).

Hydroplaning

Depending on the depth of the water layer on the road, hydroplaning may occur, even at low speeds and with new tires. Reduce vehicle speed, avoid track grooves in the road and apply brakes cautiously in the rain.

Tire traction

Tire grip is greatly reduced on a wet, snow covered or icy road. Speed and driving style must therefore be adapted to suit road conditions. The safe speed on a wet, snow covered or icy road is always lower than on a dry road.

Below a tread depth of 1/8 in (3 mm), tire grip begins to decrease rapidly on wet roads.

Pay particular attention to the condition of the road whenever the outside temperatures is close to the freezing point.

Warning

If ice has formed on the road, tire traction will be substantially reduced. Under such weather conditions, drive, steer and brake with extreme caution.

In winter, install M+S radial tires with a minimum tread depth of approximately 1/6 in (4 mm) on all wheels to ensure normal balanced handling characteristics. On packed snow, they can reduce your stopping distance compared to summer tires.

Stopping distance, however, is still considerably greater than when the road is not covered with snow or ice. Exercise appropriate caution.

For information on winter tires, see "Winter tires" (▷ page 234).

! CAUTION

Avoid spinning a drive wheel. This may cause serious damage to the drive train which is not covered by the Sprinter warranty.

Tire speed rating

Regardless of the tire speed rating, local speed limits should be obeyed. Use prudent driving speeds appropriate to prevailing conditions.

Warning

Even when permitted by law, never operate a vehicle at speeds greater than the maximum speed rating of the tires.

Exceeding the maximum speed for which tires are rated can lead to sudden tire failure, causing loss of vehicle control and possibly resulting in an accident and / or serious injury and possible death, for you and for others.

The vehicles are factory equipped with "L" (vehicles type 2500 only) or "N"-rated tires, which have a speed rating of 74 mph (120 km / h) or 87 mph (140 km / h) respectively.

For information on speed ratings or for additional general information on tire speed markings on the tire side wall, see "Tire speed rating" (▷ page 224).

Alignment and balance

Poor suspension alignment may result in:

- Fast tire wear
- Uneven tire wear, such as feathering and one-sided wear
- Vehicle pulling to the left or right

Tires may also cause the vehicle to pull to the left or right. Alignment will not correct this condition. See an authorized Sprinter Dealer for proper diagnosis.

Improper alignment will not cause vehicle vibration. Vibration may be the result of a tire and wheel imbalance. Proper balancing will reduce vibration and avoid tire cupping and spotty wear.

Coolant temperature

During severe operating conditions and stop-and-go city traffic, the coolant temperature may rise close to approximately 250 °F (120 °C).

The engine should not be operated with the coolant temperature over 250 °F (120 °C). Doing so may cause serious engine damage which is not covered by the Sprinter warranty.

Warning

- Driving when your engine is overheated can cause some fluids, which may have leaked into the engine compartment, to catch fire. You could be seriously burned.
- Steam from an overheated engine can cause serious burns which can occur just by opening the hood. Stay away from the engine if you see or hear steam coming from it.

Turn off the engine, get out of the vehicle and do not stand near the vehicle until the engine has cooled down.

▼ Automatic transmission

Gearshift pattern

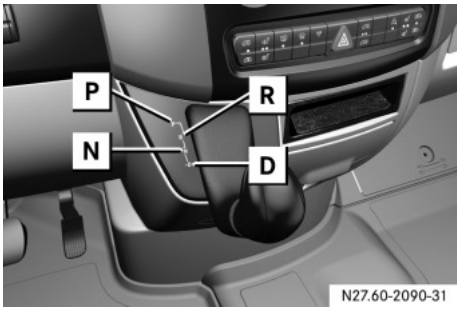

P Parking position (selector lever lock)
R Reverse gear
N Neutral
D Drive position

Gearshift procedure

The automatic transmission adapts to your individual driving style by continuously adjusting its shift points. These shift point adjustments take into account the current operating and driving conditions.

If the operating or driving conditions change, the automatic transmission reacts by adjusting the gearshift program.

The individual gears are selected automatically. The gear selected depends on:

- the selector lever position in shift ranges **D**, **4**, **3**, **2** and **1** (▷ page 123)
- the position of the accelerator pedal (▷ page 123)
- the road speed
- resistance (load, uphill gradient, trailer towing)

The selector lever position engaged or the current shift range is shown in the display. Display on vehicles with steering wheel buttons* (▷ page 89) and on vehicles without steering wheel buttons (▷ page 87).

When the selector lever is in position **D**, you can influence the gearshifts made by the automatic transmission by:

- restricting the shift range
- changing gear yourself

Selector lever positions

P	**Parking lock** Prevents the parked vehicle from rolling away. Only move the selector lever to **P** when the vehicle is stationary. You can only remove the key when the selector lever is in position **P**. The selector lever is locked in position **P** when the key is removed.
R	**Reverse gear** Only move the selector lever to **R** when the vehicle is stationary.

N	**Neutral** No power is transmitted from the engine to the drive wheels. Releasing the brakes will allow you to move the vehicle freely, e.g. by pushing or towing. Do not move the selector lever to **N** while the vehicle is in motion. The automatic transmission could otherwise be damaged. If ASR is deactivated or ESP® has malfunctioned: only move the selector lever to **N** if the vehicle is in danger of skidding, e.g. on icy roads.
D	**Drive** The automatic transmission changes gear automatically. All 5 forward gears are available.

One-touch gearshifting

When the selector lever is in position **D**, you can perform gearshifts yourself, even on vehicles with automatic transmission.

Downshifting

▶ Press the selector lever to the left towards **D–**.

The automatic transmission restricts the shift range (▷ page 123) by one gear. The automatic transmission shifts to the next gear down, depending on the gear currently engaged.

Warning ⚠

Do not downshift for additional engine braking on a slippery surface. The drive wheels may lose their grip and the vehicle could skid.

ⓘ

The automatic transmission does not shift down if you press the selector lever towards **D–** and the speed of the vehicle is too high. The engine could otherwise overrev.

Upshifting

▶ Press the selector lever to the right towards **D+**.

The automatic transmission extends the shift range by one gear. The automatic transmission shifts to the next gear up, depending on the current gearshift program.

Derestricting the shift range

▶ Press and hold the selector lever towards **D+** until D is shown once more in the display.

The automatic transmission shifts from the current shift range directly to **D**.

Selecting the ideal shift range

▶ Press and hold the selector lever towards **D–**.

The automatic transmission will shift to a range which allows easy acceleration and deceleration. To do this, the automatic transmission will shift down one or more gears.

Shift ranges

When the selector lever is in position **D** you can restrict or derestrict the shift range for the automatic transmission.

▶ Press the selector lever briefly towards the right (**D+**) or left (**D–**).

The set shift range is shown in the display.

ℹ

If the maximum engine speed for the shift range is reached and you depress the accelerator, the automatic transmission will not upshift if the shift range is restricted.

D	The transmission shifts through all 5 gears.
4	The automatic transmission shifts only as far as fourth gear.
3	The automatic transmission shifts only as far as third gear. This position allows you to use the braking effect of the engine.
2	The automatic transmission shifts only as far as second gear. For braking on steep downhill gradients and for driving: • on steep mountain roads • in mountainous terrain • in arduous conditions
1	The automatic transmission only works in first gear. For braking on extremely steep downhill gradients and long downhill gradients.

Driving tips

Accelerator pedal position

Your style of driving influences how the automatic transmission shifts gears:

- Little throttle:
  early upshifts
- More throttle:
  later upshifts

Kickdown

Use kickdown for maximum acceleration.

▶ Depress the accelerator pedal beyond the pressure point.

The automatic transmission shifts to the next gear down, depending on the engine speed.

▶ Release the accelerator pedal as soon as the desired speed has been reached.

The automatic transmission shifts up again.

Stopping

If you are only stopping briefly:

- ▶ leave the selector lever in the drive position
- ▶ secure the vehicle against rolling away using the brake pedal

Maneuvering

Maneuvering in a tight space:

- ▶ Control the speed by braking carefully.
- ▶ Accelerate only slightly and avoid jolting.

ⓘ

For rapid maneuvering (e.g. to rock the vehicle out of snow or slush), you can shift back and forth between drive position **D** and reverse gear **R** at low speeds without applying the brakes.

Trailer towing

- ▶ Run the engine in the moderate engine speed range on steep uphill gradients.
- ▶ Depending on the uphill or downhill gradient, shift down to shift range **3** or **2** (▷ page 123), even if cruise control* is switched on.

Working on the vehicle

Warning ⚠

Apply the handbrake before working on the vehicle and shift the automatic transmission into parking position **P**.
The vehicle could otherwise roll away.

▼ Good visibility

Mirrors

Before starting off, adjust the rear-view mirror and the exterior mirrors in such a way that you can get a good overview of road and traffic conditions.

Rear-view mirror*

▶ Adjust the rear-view mirror manually.

Setting the rear-view mirror to anti-dazzle mode

① Anti-dazzle lever

▶ Flick anti-dazzle lever ① to the rear.

Exterior mirrors

▶ Adjust the exterior mirrors manually.

Warning ⚠

The exterior mirrors reduce the size of the image. Objects therefore appear further away than they really are. You could therefore cause an accident if you only observe traffic in the exterior mirrors.

For this reason, you should pay attention to traffic behind you by also using the main exterior mirror and, if necessary, the rear-view mirror, especially while maneuvering or overtaking.

*Adjusting the exterior mirrors electrically**

The switch and button for adjusting the exterior mirrors are located in the interior trim of the driver's door.

① Exterior mirror on the left-hand side
② Exterior mirror on the right-hand side
③ Sets the mirror position

▶ Switch on the ignition (▷ page 67).

▶ Press left-hand side ① of the switch for the left-hand mirror or press right-hand side ② of the switch for the right-hand mirror.

▶ Press button ③ at the top or bottom, right or left until you have adjusted the mirror to the correct position.

Windshield wipers

The combination switch is located on the left of the steering wheel.

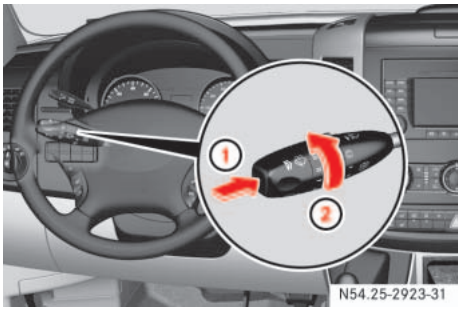

① Single wipe
② To switch the windshield wipers on

Switching on the windshield wipers

▶ Turn key to position **1** in the ignition lock (▷ page 67).

! CAUTION

Vehicles with rain sensor*:
Switch off the windshield wipers in dry weather conditions, otherwise dirt on the surface of the rain sensor or optical effects can cause inadvertent wiper sweeps. This could damage the wiper blades or scratch the windshield.

▶ Turn the combination switch to the required position in the direction of arrow ② depending on how heavy the rain is:

0 Windshield wipers off

I Intermittent wipe

II Normal wipe

III Rapid wipe

ⓘ

Canada only:

The speed of the windshield wipers is automatically reduced if the vehicle comes to a halt with the windshield wipers switched on.

For example, if you have selected speed **II** and stop the vehicle,the wipers wipe at intermittent speed until you pull away again. The wipe intervals are longer in intermittent mode.

Vehicles with rain sensor*:
You can use speed **I** as the universal speed. The rain sensor adjusts the wiping frequency according to how heavy the rain is. If you stop the vehicle, speeds **III** and **II** are automatically switched down to speed **I**.
The original speed of the windshield wipers is resumed when you drive faster than 5 mph (8 km / h) again.

Single wipe

▶ Push the combination switch briefly to the pressure point in the direction of arrow ①.

The windshield wipers wipe once without washer fluid.

Wiping with washer fluid

▶ Press the combination switch beyond the pressure point in the direction of arrow ①.

The windshield wiper will wipe with windshield washer fluid.

Vehicles with headlamp cleaning system*:
If the low-beam headlamps have been switched on, a high-pressure water jet also cleans the headlamps.

ℹ

Wipe with windshield washer fluid even when it is raining. By doing so you can prevent smears on the windshield.

Intermittent wipe

Only switch on intermittent wipe in damp weather conditions or when it is raining.

Vehicles with rain sensor*:
The a rain sensor is activated when you switch on intermittent wipe. The appropriate wiping frequency is set automatically according to the rain falling on the sensor.

Rear window wiper*

The switch is in the combination switch on the left of the steering wheel.

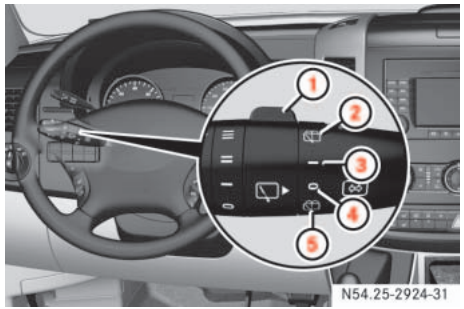

① Switch
② To wipe with windshield washer fluid
③ Intermittent wipe
④ To switch off the wiper
⑤ To wipe with windshield washer fluid

▶ Turn key to position **1** in the ignition lock (▷ page 67).

ℹ

The rear window wiper switches on automatically if you engage reverse gear and the windshield wipers are on.

Switching on intermittent wipe

▶ Turn switch ① to ③.

Switching off intermittent wipe

▶ Turn switch ① to ④.

Wiping with washer fluid

▶ Turn switch ① to ⑤ or ② and keep it pressed until the window is clean.

Windshield heating*

The windshield heating is operational while the engine is running.

The windshield heating consumes a lot of energy. You should therefore switch the heating off as soon as the windshield is clear.

The heating switches off automatically after approximately 5 minutes.

Warning ⚠

Clear ice or snow from the windshield before commencing a journey. Iced-up windows restrict your view. You could cause an accident and endanger yourself and others. Do not start the vehicle if the windows are iced up, fogged up or covered in snow.

The switch for the windshield heating is on the center console.

① To switch on / off

▶ **To switch on:** press upper part of the switch.

The indicator lamp in the switch comes on.

▶ **To switch off:** press upper part of the switch again.

▶ The indicator lamp in the switch goes out.

Rear window heating*

The rear window heating is operational while the engine is running.

The rear window heating consumes a lot of energy. You should therefore switch the rear window heating off as soon as the window is clear. The heating switches off automatically after a maximum of 12 minutes.

The switch for the rear window heating is on the center console.

① To switch on / off

▶ **To switch on:** press upper part of the switch.

The indicator lamp in the switch comes on.

▶ **To switch off:** press upper part of the switch again.

The indicator lamp in the switch goes out.

▼ Tempmatic

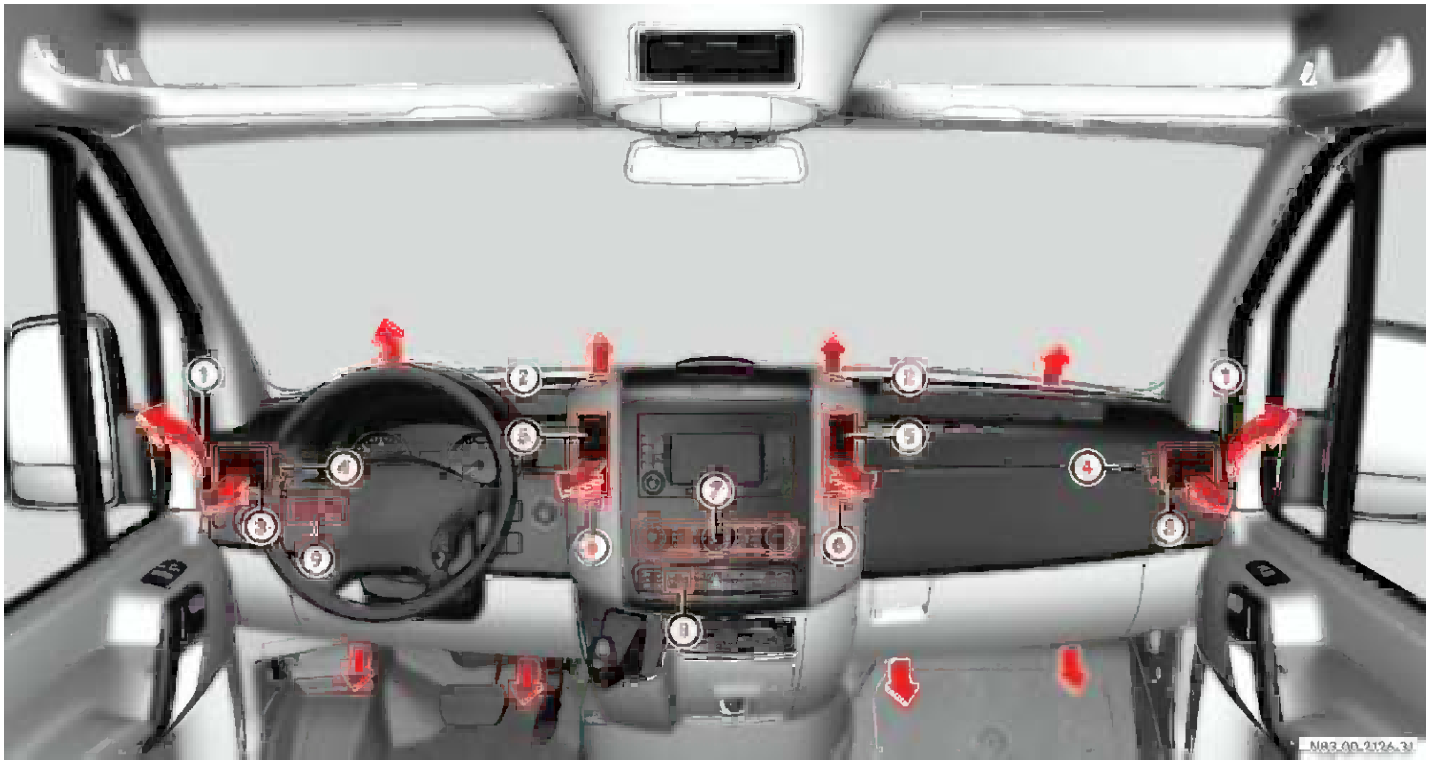

	Function	Page
①	Side window defroster vents	135
②	Thumbwheel for air vents	
③	Side air vents	
④	Thumbwheel for side air vents and defroster vents	135
⑤	Swiveling center air vents	
⑥	Thumbwheel for center air vents	
⑦	Control panel	
	• Tempmatic	131
	• Rear heating/rear cooling*	136
⑧	Switch	
	• Rear window heating*	128
	• Windshield heating*	127
⑨	Auxiliary heating switch*	140
	Heater booster switch*	137

Tempmatic is only operational while the engine is running. You can use Tempmatic to regulate or control the temperature automatically. The vehicle is either heated or cooled, depending on the temperature selected and the outside temperature.

The combination filter removes most dust particles, pollen and unpleasant odors from the outside air.

The interval for replacing the filter depends on environmental factors, e.g. high air pollution. The interval may be shorter than that indicated in the Service Booklet.

ℹ

Condensation may collect under the vehicle while Tempmatic is in operation.

Warning ⚠

Follow the settings recommended on the following pages for heating or cooling. The windows could otherwise fog up. As a result, you could be distracted from road and traffic conditions and cause an accident.

Warning ⚠

Air flowing out of the air vents in the footwell when Tempmatic is in operation may be very hot or very cold. There is therefore a risk of frostbite or burns to bare skin in the immediate proximity of these outlets. Keep bare skin away from these air outlets. If necessary, direct the airflow into a different area of the vehicle interior using the air distribution control.

ℹ

If the vehicle interior has been heated up, ventilate the vehicle before starting your journey or briefly switch to air-recirculation mode for faster cooling.

Keep the air inlet on the hood free from ice and snow.

Position the sliders for the center air vents in the central position to provide practically draft-free ventilation.

Control panel

	Function	Page
①	Temperature selector control	132
②	Airflow control with indicator	133
③	Switch for air-recirculation mode	133
④	Switch for reheat function (dehumidification)	134
⑤	Air distribution control	133
⑥	Switch for	
	• Economy mode	131
	• Residual heat mode	134

Economy mode (air-conditioning system off)

The air in the vehicle is neither cooled nor dehumidified when economy mode is selected.

ℹ

Only use this setting for a brief period. The windows could otherwise fog up.

▶ **To activate:** press the AC OFF REST switch for economy mode.

The indicator lamp in the switch comes on.

▶ **To deactivate:** press the AC OFF REST switch for normal mode.

The indicator lamp in the switch goes out.

Basic setting

Heating

- ▶ Set temperature selector control ① (▷ page 131) as required, but do not turn the control below the middle position.
- ▶ Set airflow control ② (▷ page 131) as required, but do not turn the control below the second speed.
- ▶ Set the air distribution control as shown.
- ▶ Close the center air vents.
- ▶ Close the air vents.
- ▶ Open the side air vents half-way and direct them at the side windows.

Ventilation

This setting rapidly ventilates the vehicle interior.

- ▶ Turn temperature selector control ① (▷ page 131) to the lowest setting (maximum cooling).
- ▶ Set airflow control ② (▷ page 131) as required, but do not turn the control below the second speed.
- ▶ Set air distribution control ⑤ (▷ page 131) to ▭.
- ▶ Open as required:
  - the center air vents
  - the side air vents
  - the ventilation vents
- ▶ Press the AC OFF REST switch.

  The indicator lamp in the switch comes on. The air-conditioning system is switched off.

Setting the temperature

The temperature is set using temperature selector control ① in the control panel (▷ page 131).

The recommended setting for the target temperature is 72.0 °F (22.2 °C) under normal conditions, to which Tempmatic adjusts as rapidly and as comfortably as possible.

Only change the temperature in small increments.

> ℹ
> If you use the basic settings for heating or ventilating the vehicle, you will only rarely need to adjust the temperature, airflow and air distribution (▷ page 132).

- ▶ **To increase:** turn the temperature selector control clockwise.
- ▶ **To reduce:** turn the temperature selector control slightly counterclockwise.

Setting the airflow

① Airflow control

▶ **To increase:** press the airflow control.

▶ **To reduce:** press the airflow control.

The display next to the airflow controls indicates the speed of the airflow.

ℹ

The blower switches off if you press the airflow control again after the slowest speed has been reached.

Setting the air distribution

The air distribution is set using the air distribution control in the control panel (▷ page 131).

The markings on the air distribution control have the following meanings:

Mark	Meaning
	• Air from the air vents
	• Air to the windshield • Air from the air vents
	• Air to the windshield • Air from the air vents • Air to the footwell
	• Air from the air vents • Air to the footwell

Air-recirculation mode

You can switch off the flow of outside air if unpleasant odors are entering the vehicle from outside, e.g. before driving through a tunnel. No more outside air is taken in and the air inside the vehicle is recirculated.

Warning ⚠

Only switch over to air-recirculation mode briefly if outside temperatures are low. The windows could otherwise fog up. As a result, you could be distracted from road and traffic conditions and cause an accident.

The switch for air-recirculation mode is in the control panel (▷ page 131).

▶ **To switch on:** press the switch.

The indicator lamp in the switch comes on.

▶ **To switch off:** press the switch again.

The indicator lamp in the switch goes out.

ℹ

Air-recirculation mode is automatically switched off after about 10 to 30 minutes, depending on the outside temperature.

Residual heat mode

The engine stores residual heat after long periods of driving. You can use the residual heat of the engine to heat the stationary vehicle for a further 30 minutes.

ℹ

The heating period depends on:

- the coolant temperature
- the interior temperature selected
- the on-board voltage

The blower runs at speed **1** regardless of the position of the airflow control.

▶ **To switch on:** turn key to position **0** in the ignition lock (▷ page 67) or remove it.

▶ Set as required:

- temperature (▷ page 132)
- air distribution (▷ page 133)
- the air vents (▷ page 129)

▶ Press the AC OFF REST switch (▷ page 131).

The indicator lamp in the switch comes on.

▶ **To switch off:** press AC OFF REST switch again (▷ page 131).

The indicator lamp in the switch goes out.

ℹ

Residual heat switches off automatically:

- after about 30 minutes
- when you switch on the ignition
- if the battery's voltage drops

Reheat function (dehumidification)

The reheat function quickly ensures defrosted windows and dehumidification in the vehicle interior.

▶ **To switch on:** press the switch (▷ page 131).

The indicator lamp in the switch comes on.

▶ **To switch on:** press the switch (▷ page 131).

▶ The indicator lamp in the switch goes out.

Special settings

ℹ

Only use special settings briefly.

Fogged-up windows

▶ If necessary, switch off air-recirculation mode by pressing the switch (▷ page 131).

The indicator lamp in the switch goes out. Fresh air is supplied to the interior.▷▷

▶ Switch on the reheat function using the switch (▷ page 131).

The indicator lamp in the switch comes on.

▶ Turn airflow control ② (▷ page 131) to a higher blower speed, but do not turn the control below second speed.

▶ Turn temperature selector control ① (▷ page 131) to a higher temperature.

▶ Turn air distribution control ⑤ to ▲ .

▶ Close the center air vents and the air outlets for the head area and the rear compartment.

▶ Open the side air vents and direct them at the side windows.

▶ If the windshield is fogged up on the outside, switch on the windshield wipers (▷ page 126).

Defrosting

The following settings can be used to clear the windshield and the side windows, e.g. if covered with frost.

▶ Set temperature selector control ① to .

▶ Turn airflow control ② to fourth speed.

▶ Turn air distribution control ⑤ to ▲ .

▶ Close the center air vents and the air vents for the head area and the rear compartment.

▶ Open the side air vents fully.

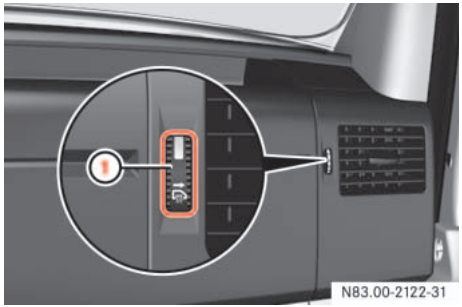

① Side window defroster vent thumbwheel

▶ Turn side window defroster vent thumbwheel ① all the way up.

The defroster vent is open if the defroster vent is visible.

Ventilated glove box*

The glove box can be ventilated when Tempmatic is switched on, e.g. to cool its contents.

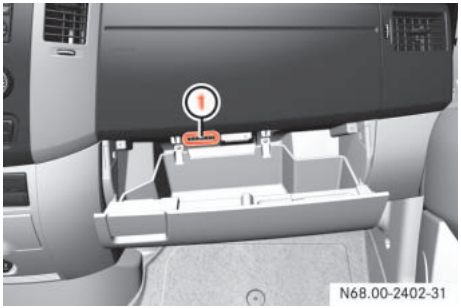

① To switch the air supply on / off

▶ **To switch on:** press switch ① to the left.

▶ **To switch off:** press switch ① to the right.

Air conditioning in the rear*

① Air conditioning in the rear
② Airflow control
③ Temperature selector control

▶ **To switch on:** press the switch.

The indicator lamp in the switch comes on.

▶ **To switch off:** press the switch.

The indicator lamp in the switch goes out.

Setting the airflow

The airflow is set using the airflow control for the rear compartment.

▶ **To increase:** press the airflow control.

▶ **To reduce:** press the airflow control.

The display next to the airflow controls indicates the speed of the airflow.

Setting the temperature

Only change the temperature in small increments.

ℹ

Your vehicle may be equipped with an air-conditioning system in the rear compartment and / or a rear heater.

If both systems are installed and the temperature selector control is in the middle position, only one of the systems operates and air-recirculation mode is active.

▶ **To increase:** turn the temperature selector control clockwise.

▶ **To reduce:** turn the temperature selector control counterclockwise.

Air vents in the roof air duct

Adjustable air vents are integrated in the roof air duct.

① Air vents

▶ Adjust the airflow by opening / closing the air flaps.

Alter the air distribution by turning the air vents.

! CAUTION

Never close all the air vents, otherwise there is a risk of damage to the air-conditioning system in the rear compartment.

Heater booster function*

The fuel-fired heater booster system heats the vehicle interior as quickly as possible while the engine is running.

ℹ

The auxiliary heating automatically switches to heater booster mode after the engine is started.

The switch for the heater booster function is between the light switch and the steering wheel.

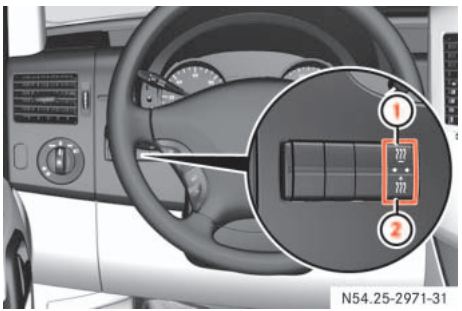

Vehicles with auxiliary heating

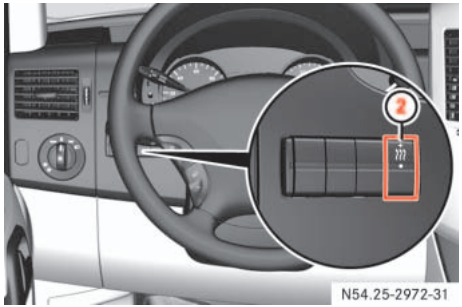

Vehicles without auxiliary heating*

① To switch the auxiliary heating on / off (▷ page 140)

② To switch the heater booster function on / off

▶ **To switch on:** press the switch .

The indicator lamp in the switch comes on.

ⓘ

If you switch off the engine without switching off the heater booster function, the system will be switched on the next time the engine is started (memory function).

▶ **To switch off:** press the switch again.

The indicator lamp in the switch goes out.

The heater booster function operates for around a further 2 minutes and then switches off automatically.

Electrical heater booster system

The vehicle is equipped with an electrically powered heater booster system.

The heater booster system ensures that the vehicle interior is heated up as quickly as possible during the engine's warm-up phase.

ⓘ

The heater booster system switches on automatically as required.

▼ Auxiliary heating/ventilation*

The auxiliary heating heats or ventilates the interior to a temperature that you have set. The auxiliary heating can be operated with the engine switched on or off.

The auxiliary heating is equipped with a water heater.

Warning ⚠

Exhaust fumes are produced while the auxiliary heating is in operation. For this reason, switch off the auxiliary heating in enclosed spaces without an extraction system, e.g. a garage.

Operation of the auxiliary heating system is prohibited at gas stations or when refueling your vehicle. The auxiliary heating must therefore be switched off at refueling stations.

Warning ⚠

Observe the relevant safety regulations in the case of vehicles used for the transport of hazardous goods.

Aerosols, gas cartridges and other pressurized containers transported in the vehicle may be highly flammable and could explode when heated.

Make sure that the containers described are kept away from the flow of hot air from the auxiliary heating.

Otherwise, you could endanger yourself and others.

The auxiliary heating heats the coolant and the vehicle interior and is therefore more favorable to the engine and consumes less fuel. The fuel tank must be at least a quarter full to ensure that the auxiliary heating/ventilation operates correctly.

The maximum heating period is 60 minutes.

You can use the auxiliary heating / ventilation to:

- ventilate or preheat the vehicle interior and to de-ice the windows
- start the engine better in cold weather
- support the vehicle's heating system while the engine is running and outside temperatures are low (heater booster function) (▷ page 137)

ℹ The auxiliary heating automatically switches to heater booster mode after the engine is started.

You can use the operating system to define up to three switch-on times, one of which can be selected to switch on the auxiliary heating / ventilation (▷ page 142).

Auxiliary heating/ventilation*

You can switch the auxiliary heating / ventilation on and off immediately using:

- the auxiliary heating / heater booster switch (▷ page 140)
- the auxiliary heating remote control* (▷ page 141)

! CAUTION

Switch on the auxiliary heating at regular intervals (at least once a month) for approximately 10 minutes.

Make sure that the hot air flow is not obstructed. The auxiliary heating would otherwise overheat and switch off.

Before switching on

▶ Adjust the heat output to the desired temperature using the temperature control (▷ page 131).

▶ Set the air distribution as required.

Operation using the switch

The switch for the auxiliary heating / ventilation is between the light switch and the steering wheel.

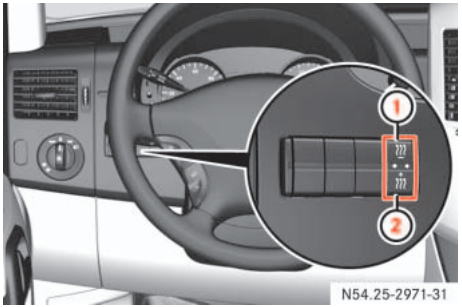

① To switch the auxiliary heating on / off
② To switch the heater booster function on / off (▷ page 137)

▶ **To switch the auxiliary heating on:** press and hold the switch for more than 2 seconds:

- The auxiliary heating / ventilation heats or ventilates the interior to a temperature that you have set.
- The blower switches to the first speed.
- The red indicator lamp in the switch comes on.

ℹ

You cannot use the auxiliary ventilation to cool the vehicle interior to a lower temperature than the outside temperature.

The heating or ventilation period is limited to 60 minutes.

▶ **To switch the auxiliary heating off:** press the switch.

or

▶ Turn the key to position **0** in the ignition lock (▷ page 67).

The red indicator lamp in the switch goes out.

The auxiliary heating operates for around a further 2 minutes and then switches off automatically.

Operation using the remote control*

The remote control has a maximum range of approximately 600 meters. The range may be reduced by:

- sources of interference
- solid objects between the remote control and the vehicle
- the remote control being in an unfavorable position
- transmitting from an enclosed space

You can use up to 4 remote control units on the vehicle.

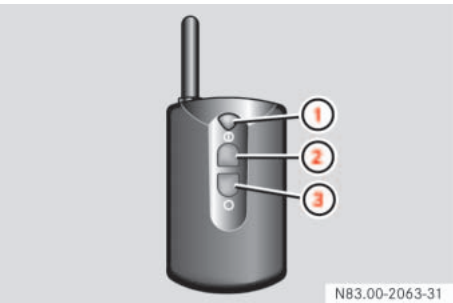

① Indicator lamp
② To switch the auxiliary heating on
③ To switch the auxiliary heating off

▶ **To switch the auxiliary heating on:** press button ②.

Indicator lamp ① lights up briefly.

▶ **To switch the auxiliary heating off:** press button ③.

Indicator lamp ① lights up briefly.

The auxiliary heating operates for around a further 2 minutes and then switches off automatically.

ℹ

Change the batteries immediately if indicator lamp ① does not light up briefly each time a button is pressed (▷ page 316).

Synchronizing the remote control

▶ Press and hold the switch for more than 10 seconds:

The red indicator lamp in the switch remains lit until it is released.

Afterward, the red indicator lamp in the switch flashes. The system is activated for synchronizing.

▶ Press button ② on the remote control.

The indicator lamp in the switch stops flashing and goes out. The remote control and the control panel are synchronized.

ℹ

If you press button ③ on the remote control during the first 3 seconds of synchronization process, only this remote control will be synchronized with the clock.

Any other remote control units that were synchronized will be cleared.

Selecting a switch-on time

You can use the operating system to define up to 3 switch-on times, one of which can be selected to switch on the auxiliary heating / ventilation.

Operating system without steering wheel buttons

▶ Switch on the ignition (▷ page 67).

▶ Press the ∫∫∫ switch.

The ∫∫∫ symbol in the display flashes.

or

▶ Press the Ⓜ menu button on the instrument cluster repeatedly until the ∫∫∫ symbol in the display flashes.

▶ Use the ⊕ or ⊖ button on the instrument cluster to select desired switch-on time 1 to 3.

The switch-on time selected is displayed.

▶ Wait 10 seconds for the standard display to appear.

The switch-on time is selected.
The yellow indicator lamp in the ∫∫∫ switch comes on.

If you have not selected a switch-on time and --:-- appears in the display, the automatic switch-on is deactivated. The yellow indicator lamp in the ∫∫∫ switch goes out.

ⓘ

If you turn the key to position **0** in the ignition lock, the yellow indicator lamp in the ∫∫∫ switch goes out after 30 minutes.

The red indicator lamp in the ∫∫∫ switch comes on when the auxiliary heating switches on.

*Operating system with steering wheel buttons**

▶ Switch on the ignition (▷ page 67).

▶ Briefly press the ∫∫∫ switch.

The Aux. heat. submenu is shown in the display.

The selected switch-on time is highlighted or Timer off is highlighted if no switch-on time has been selected.

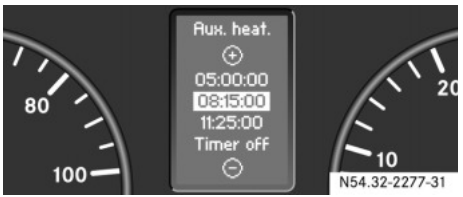

ⓘ

You can reach the Aux. heat. submenu via the Settings menu (▷ page 96).

▶ Press the + or − button to select the desired switch-on time. The automatic switch-on is deactivated if the Timer off setting is selected. ▷▷

▶ Press the button.

The switch-on time is selected.
The yellow indicator lamp in the switch comes on.

ℹ

If you turn the key to position **0** in the ignition lock, the yellow indicator lamp in the switch goes out after 30 minutes.

The red indicator lamp in the switch comes on when the auxiliary heating switches on.

Setting the switch-on time

Operating system without steering wheel buttons

▶ Select a switch-on time as described under "Selecting a switch-on time" (▷ page 142).

▶ Press the 0 reset button on the instrument cluster to set the selected switch-on time.

The hours figure flashes and the symbol appears in the display.

▶ Set the hours using the + or − am button on the instrument cluster.

▶ Press the 0 reset button.

The minute display flashes.

▶ Set the minutes using the + or − button.

ℹ

If you keep the button pressed, the values will change continuously.

To return to the standard display:

- press and hold the M button on the instrument cluster for more than 1 second
- do not press a button for 10 seconds

Operating system with steering wheel buttons

▶ Select a switch-on time as described under "Selecting a switch-on time" (▷ page 142).

▶ Press the button.

The Hours menu appears in the display.

▶ Set the hours using the + or − button.

▶ Press the button.

The Minutes menu appears in the display.

▶ Set the minutes using the + or − button.

▶ Press the button.

The switch-on time is set and selected.

ℹ

To return to the standard display, press the or button repeatedly until the standard display appears.

▼ Open air

Side windows

You can open and close the side windows electrically.

The switches for all side windows are located on the door control panel.

Warning ⚠

Make sure that nobody can become trapped as you close a side window.

Remove the key from the ignition lock even if you are only leaving the vehicle for a short time.

Never leave children unsupervised in the vehicle.

Power window switches (driver's side)

① Power window, left
② Power window, right

▶ Switch on the ignition (▷ page 67).

▶ **To open:** press and hold switch ① or ② until the window has reached the desired position.

ℹ

The window opens automatically when you press the switch beyond the pressure point and then release it.
To stop the window, pull or press the switch again.

▶ **To close:** pull and hold switch ① or ② until the window has reached the desired position.

Resetting the side windows

The side windows must be reset if the battery has been disconnected:

▶ Pull the two power window switches until the side windows are closed.

▶ Hold the switches in this position for about 1 second.

The side windows are reset.

Sliding sunroof*

Warning

Make sure that nobody can become trapped as you close the sliding sunroof.

The glass may shatter in the event of an accident.

If you or other occupants are not wearing your seat belt, there is a risk of being thrown out of the opening in the event of the vehicle overturning. Therefore, always wear a seat belt to reduce the risk of injuries.

In accidents in which the vehicle overturns, there is an increased risk of injury even for occupants who have fastened their seat belts correctly, as their head or limbs could be thrust through the opening.

Remove the key from the ignition lock even if you are only leaving the vehicle for a short time.

Sliding sunroof switch

① To open
② To close
③ To raise
④ To lower

! CAUTION

Do not raise the sliding sunroof if you have mounted a roof rack. It would otherwise strike the roof rack.
You could thereby damage the sliding sunroof and the roof rack.

- ▶ Switch on the ignition (▷ page 67).
- ▶ Press the sliding sunroof switch in the desired direction as far as the first pressure point.
- ▶ Release the sliding sunroof switch when the desired position has been reached.

ⓘ

The sliding sunroof opens automatically when you press the sliding sunroof switch for opening beyond the pressure point and then release it.
To stop the sliding sunroof, press the sliding sunroof switch again in any direction.

! CAUTION

Do not transport objects protruding through the sliding sunroof. You could otherwise damage the sliding sunroof.

Resetting the sliding sunroof

The sliding sunroof must be reset after:

- the sunroof has been closed manually using the emergency operation key (▷ page 304)
- the sunroof has opened with a jerk
- a malfunction

▶ Switch on the ignition (▷ page 67).

▶ Press the sliding sunroof switch in the direction of arrow ② (▷ page 145).

▶ Wait until the sliding sunroof is closed and then keep the sliding sunroof switch pressed for approximately 3 seconds.

The sliding sunroof is reset.

Roof ventilator in the load compartment*

The roof ventilator can be used to ventilate or remove air from the load compartment.

The switch is between the light switch and the steering wheel.

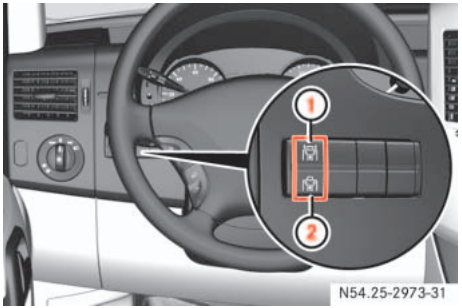

① To ventilate the load compartment (air out)
② To ventilate the load compartment (air in)

▶ Switch on the ignition (▷ page 67).

▶ **Air out:** press upper part ① of the switch.

The roof ventilator removes used air from the load compartment.

▶ **Air in:** press lower part ② of the switch.

The roof ventilator feeds fresh air into the load compartment.

▶ **To switch off:** set the switch to the center position.

▼ Driving systems

Driving systems which may form part of your vehicle are described on the following pages:

- Cruise control* (▷ page 147), which you can use to control the speed of your vehicle
- Parktronic system*, which is an aid for parking and maneuvering (▷ page 150)
- Reverse warning feature*, which helps you ensure the safety of other road users (▷ page 153)

The ABS, BAS, ESP®, ASR and EBV driving safety systems are described in the "Safety and Security" section (▷ page 23).

Cruise control*

Cruise control maintains the speed of the vehicle for you.

Use cruise control if road and traffic conditions make it appropriate to maintain a steady speed for a prolonged period. You can store any road speed above 20 mph (30 km/h).

ⓘ

The increments for setting speed and the threshold values for switching on or automatically switching off cruise control depend on the digital speedometer setting, mph or km/h (▷ page 99).

Warning ⚠

The cruise control function cannot take account of road and traffic conditions.

Always pay attention to road and traffic conditions, even when cruise control is activated.

Cruise control is only an aid designed to assist driving. You are responsible for the vehicle's speed and for braking in good time.

If there is a change of drivers, advise the new driver of the cruising speed that is stored.

Warning ⚠

Do not use cruise control:

- if road and traffic conditions do not permit a constant driving speed to be maintained (e.g. heavy traffic or winding roads). You could otherwise cause an accident.
- on slippery roads. The drive wheels may lose their grip when braking or accelerating and the vehicle could skid
- when visibility is poor, e.g. in fog, heavy rain or snow

Cruise control may be unable to maintain the stored speed on uphill or downhill gradients. The stored speed is resumed if the gradient evens out and the vehicle's speed has not fallen below 20 mph (30 km/h).

Cruise control lever

The cruise control lever is the uppermost lever on the left of the steering column.

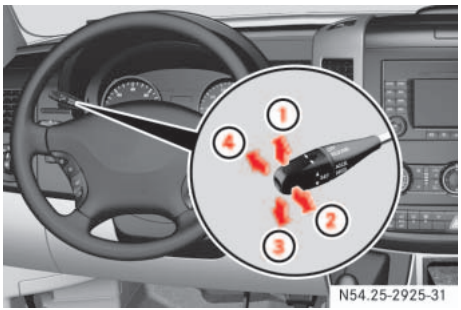

① To store the current or a higher speed
② To resume the last speed stored
③ To store the current speed or a lower speed
④ To deactivate cruise control

Storing the current speed

▶ Accelerate / decelerate the vehicle to the desired speed.

▶ Move the cruise control lever briefly upward ① or downward ③.

▶ Release the accelerator pedal.

Cruise control is activated.

The current speed is stored.

You cannot activate cruise control if:

- you are driving under 20 mph (30 km/h)
- you are braking
- you apply the handbrake and the PARK indicator lamp in the instrument cluster is lit
- ESP® or ASR is intervening and the yellow ASR/ESP® warning lamp flashes in the instrument cluster

Resuming the stored speed

Warning

Only resume the stored speed if you know what this speed is and the current situation is appropriate to do so. Otherwise, sudden acceleration or braking could endanger you or others.

▶ Pull the cruise control lever briefly in the direction of arrow ②.

▶ Release the accelerator pedal.

Cruise control is activated and adjusts the vehicle's speed to the last speed stored.

When you pull the cruise control lever in direction of arrow ② for the first time after starting the engine, cruise control is switched on and the speed at which you are currently driving is stored.

Setting the speed

Warning ⚠

The rate at which you increase the speed in 1 mph increments (1 km/h increments) may be faster than your vehicle is able to accelerate. Your vehicle may then continue to accelerate up to the newly set speed even after you have released the cruise control lever.

Only increase the speed if the current situation is appropriate to do so. Sudden acceleration could otherwise endanger you and others.

▶ Briefly press the cruise control lever upward ① to increase the speed or downward ③ to reduce the speed.

The last speed stored is increased or decreased in 1 mph increments (1 km/h increments).

or

▶ Press and hold the cruise control lever up ① or down ③ until the desired speed has been reached.

▶ Release the cruise control lever.

The current speed is stored.

ℹ

Cruise control is not deactivated if you depress the accelerator pedal. If you accelerate briefly to overtake, for example, cruise control adjusts the vehicle's speed to the last speed stored after you have finished overtaking.

Deactivating cruise control

There are various ways of deactivating cruise control:

▶ Briefly press cruise control lever forward ④.

or

▶ Apply the brakes.

The last speed set remains stored.

ℹ

The last speed stored is cleared when you switch off the engine.

ℹ

Cruise control is automatically deactivated if:

- you are braking
- you apply the handbrake and the (P) PARK indicator lamp in the instrument cluster is lit
- you are driving under 20 mph (30 km/h)
- ESP® or ASR is intervening and the yellow ASR/ESP® warning lamp flashes in the instrument cluster
- you move the selector lever to position **N** while driving
- ESP®, ASR or ABS has malfunctioned

Parktronic system (PTS)*

Warning

Parktronic is only an aid and may not detect all obstacles. This system does not relieve you of the need to pay attention.

You are always responsible for safety and must continue to pay attention to your immediate surroundings when parking and maneuvering. Otherwise, you could endanger yourself and others.

Warning

Make sure that no persons or animals are in the maneuvering range of the vehicle. They could otherwise be injured.

Parktronic is an electronic parking aid and informs you visually and audibly of the distance between the vehicle and an obstacle.

Parktronic is automatically switched on when you switch on the ignition and release the handbrake. You must also move the selector lever to position **D**, **N** or **R**.

Parktronic switches off at speeds of over 11 mph (18 km/h). Parktronic switches on again as soon as the vehicle's speed falls below this limit speed.

Parktronic is equipped with sensors in the front and rear bumper to monitor the area around your vehicle.

Range of the sensors

The sensors must be free from dirt, ice and slush, otherwise they may not function correctly. Clean the sensors regularly, taking care not to scratch or damage them (▷ page 244).

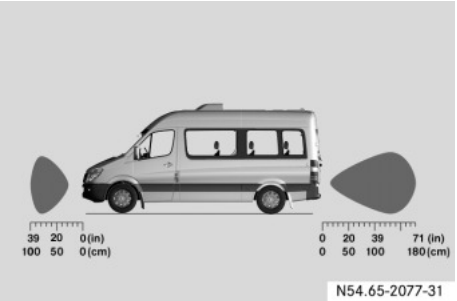

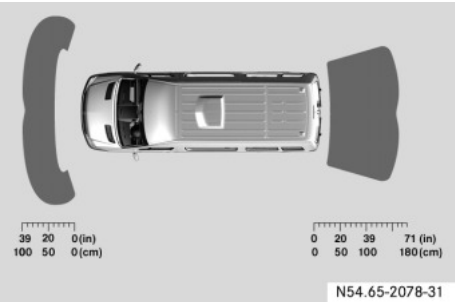

Front sensors

Center	about 39 in (100 cm)
Corners	about 26 in (65 cm)

Rear sensors

Center	about 71 in (180 cm)
Corners	about 39 in (100 cm)

Minimum distance

Center	about 12 in (30 cm)
Corners, front	about 10 in (25 cm)
Corners, rear	about 12 in (30 cm)

If an obstacle is within this range, all segments of the warning displays light up and you will hear an audible warning tone. The distance may no longer be displayed if you drive the vehicle closer to the obstacle than the minimum distance.

! CAUTION

Pay particular attention to obstacles above or below the sensors when parking, such as flower pots or trailer towbars.
Parktronic does not detect such objects in the immediate vicinity. You could damage the vehicle or objects.

Parktronic can malfunction as a consequence of:

- ultrasonic sources such as a truck's compressed-air brakes, an automatic car wash or a pneumatic drill
- attachments to the vehicle, e.g. load-bearing implements or trailer couplings
- number plates (vehicle license plates) that are not affixed flat against the bumper
- dirty or icy sensors

Warning displays

The warning displays indicate the distance between the sensor and the obstacle.

The warning display for the front area is located on the middle of the dashboard above the center console.

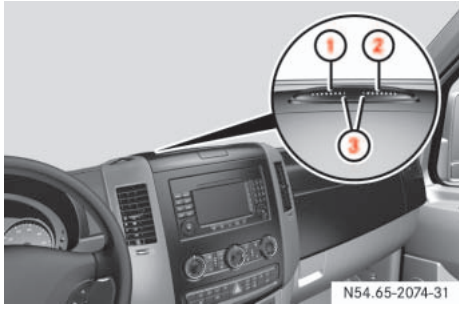

Front area warning display

① Left-hand side of vehicle
② Right-hand side of vehicle
③ Indicator segments

The warning displays for the rear left and right-hand sides are in the exterior mirror concerned.

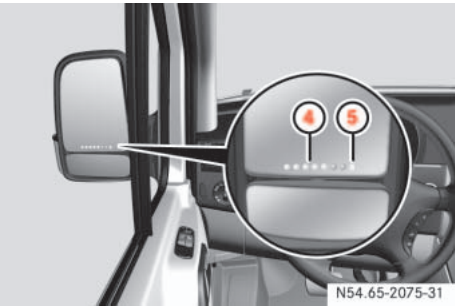

Warning display in the left-hand exterior mirror for the area to the rear left-hand side

④ Left-hand side of vehicle
⑤ Indicator segments

The warning display is divided into 5 yellow and 2 red segments for each side of the vehicle. Parktronic is operational if yellow indicator segments ③ and ⑤ light up.

! CAUTION

There is a malfunction if only the red segments of the warning display light up (▷ page 262).

The selector lever position determines whether the front and/or rear area is monitored.

Transmission position	Monitoring
D	Front area
R or **N**	Front and rear area
P	No areas activated

One or more segments light up as the vehicle approaches an obstacle, depending on the vehicle's distance from the obstacle.

From the:

- sixth segment, an intermittent warning tone sounds for approximately 2 seconds
- seventh segment, a continuous warning tone sounds. You have reached the minimum distance.

Roll-back warning

Parktronic automatically begins to monitor the area behind the vehicle if the vehicle begins to roll backwards without reverse gear engaged, e.g. after stopping on an uphill gradient.

If Parktronic detects an obstacle no more than 31 in (80 cm) away,

- all the segments of the warning displays light up
- a continuous warning tone sounds as the vehicle approaches the obstacle and for a further 2 seconds after the vehicle has come to a halt

Switching Parktronic on/off

You can switch Parktronic on and off manually.

The switch is located on the center console.

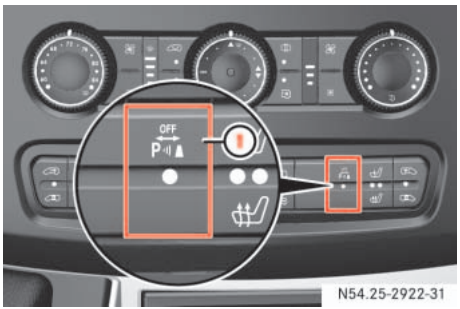

① To switch Parktronic on/off

▶ **To switch off:** press upper part ① of the switch.

The indicator lamp in the switch comes on.

▶ **To switch on:** press upper part ① of the switch again.

The indicator lamp in the switch goes out.

Trailer towing

If you attach a trailer, Parktronic is deactivated for the rear area as soon as you make the electrical connection between your vehicle and the trailer.

Reverse warning feature*

On vehicles with a reverse warning feature, a warning signal sounds when reverse gear is engaged to alert other road users.
The volume of the warning signal can be reduced for night-time operation.

Warning ⚠

The reverse warning feature signal could be ignored by other road users. For this reason, the reverse warning feature cannot guarantee that there are no people or objects behind your vehicle.

The reverse warning feature is a system which helps you ensure the safety of other road users. However, it does not relieve you in any way from the responsibility of personally ensuring that there are no people or objects behind your vehicle when reversing.

For this reason, always observe the road and traffic conditions with due caution. Make sure that there are no people or objects behind your vehicle when reversing, in order to avoid injuring people or damaging property. If necessary, ask someone to direct you when maneuvering.

Reducing the volume of the warning signal

▶ Select reverse gear twice in quick succession.

The warning signal sounds more quietly.

ℹ

The warning signal always sounds at normal volume and must be turned down again every time reverse gear is engaged.

Operating speed governor (ADR)*

When activated, the operating speed governor (ADR) automatically increases the engine speed to a preset or adjustable operating speed (▷ page 155).

ℹ

The idle speed of the engine automatically increases after a cold start. If the set operating speed is lower than the increased idle speed, the set operating speed is attained only after the engine has reached its operating temperature.

It is only possible to activate ADR with the vehicle stationary and the handbrake applied. The selector lever must be in position **P**.

Activating / deactivating ADR

The switch is between the light switch and the steering wheel.

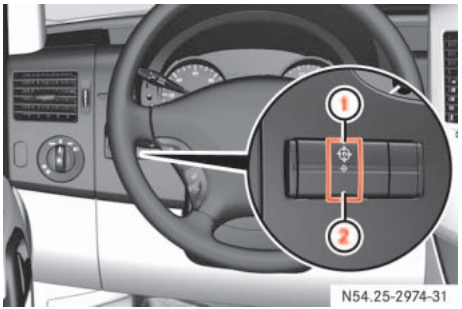

① To switch on
② To switch off

▶ **To switch on:** press upper part ① of the switch with the engine running.

The indicator lamp in the switch comes on.

Vehicles without steering wheel buttons:
The ADR indicator lamp in the instrument cluster comes on.

Vehicles with steering wheel buttons:
The `Operating speed governor active` message appears in the display.

▶ **To switch off:** press lower part ② of the switch with the engine running.

The indicator lamp in the switch and the ADR indicator lamp in the instrument cluster go out.

ℹ

ADR is automatically deactivated when:

- you release the handbrake
- the vehicle moves
- the control unit detects a malfunction

Adjustable operating speed*

Adjusting the operating speed

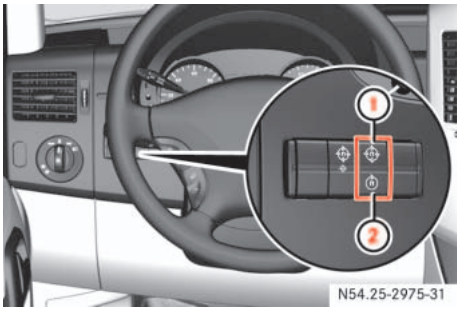

① To increase speed
② To reduce speed

▶ Switch on ADR (▷ page 154).

▶ **To increase:** press upper part ① of the switch.

or

▶ On vehicles with cruise control*, press the cruise control lever* up (▷ page 148).

▶ **To reduce:** press lower part ② of the switch.

or

▶ On vehicles with cruise control*, press the cruise control lever* down (▷ page 148).

ℹ

The idle speed of the engine automatically increases after a cold start.
You can only reduce the operating speed to the current idle speed.

▼ Transporting

Loading guidelines

Warning

Secure and position a load as described in the loading guidelines. Otherwise, the load could slide or be thrown around in the event of strong braking maneuvers, sudden changes of direction or poor road conditions, thereby injuring you or others. The same applies to dismantled seats if left inside the vehicle.

Please note that loads increase the risk of injury during an accident even if you comply with all loading guidelines.

Observe the notes in the "Securing a load" section (▷ page 158).

Warning

Do not exceed the vehicle's permissible gross weight or the permissible axle loads when loading the vehicle or carrying additional passengers.

If you exceed the vehicle's permissible axle loads or the maximum permissible gross weight when transporting items or carrying passengers, tire stability and driving safety are reduced. The vehicle's driving and steering characteristics would be greatly altered. Braking and stopping distances would be significantly longer.

Your vehicle's driving, steering and braking characteristics change as the vehicle's gross weight increases or its center of gravity is raised.

Always ensure that loads are distributed correctly and adapt your driving style in accordance with the load.

Warning

After an accident, have a damaged load compartment floor or damaged load surface, the lashing eyes and lashing materials inspected by a specialist workshop having the necessary technical expertise and tools to carry out the required work.

The manufacturer recommends that you use an authorized Sprinter Dealer for this purpose. In particular, work relevant to safety or on safety-related systems must be carried out at a qualified specialist workshop.

! CAUTION

If you are using a roof carrier system, observe the maximum roof load and maximum load-bearing capacity of the roof carrier system.

For more information about the maximum roof load and roof carrier systems, please refer to the "Technical data" section (▷ page 351).

Before loading

- Check the tire pressures and correct them if necessary (▷ page 213).
- Clean the load compartment floor. The load compartment floor must be dry, cleanly swept and free of oil and dust to reduce the risk of the load slipping.
- If necessary, place anti-slip mats on the load compartment floor.

! CAUTION

As soon as the anti-slip mats start to show signs of permanent deformation, squashed areas or tears/holes, they are unsuitable for securing loads and must be replaced.

During loading

- Observe the maximum permissible axle loads and permissible gross weight for the vehicle.

! CAUTION

In passenger vans with the maximum number of seats, the maximum payload would cause the permissible rear axle load to be exceeded.

ⓘ

Bear in mind that your vehicle's unladen weight is increased by the installation of optional equipment and accessories.

- Observe the notes on load distribution (▷ page 158).
- Secure the load (▷ page 158). All country-specific legal requirements must be observed.

Checks after loading

- **Securing a load:** before each journey and at regular intervals during longer journeys, check whether the load is properly secured and take additional securing measures, if necessary.
- **Doors:** close the sliding doors and rear doors.

Warning ⚠

Make sure that the sliding doors and rear doors are always closed when the engine is running.

Otherwise, exhaust fumes could enter the vehicle interior and poison you.

- **Tire pressure:** adjust the tire pressure in accordance with the vehicle's load (▷ page 213).
- **Driving characteristics:** adapt your driving style to the load.

Load distribution

The load's overall center of gravity should be as low and central as possible, between the axles near the rear axle.

! CAUTION

Excessive loads on individual points of the load compartment floor or load surface have a negative effect on handling characteristics and could damage the floor covering.

For crewbus models:

- ▶ Always transport loads in the load compartment.
- ▶ Always place loads flush against the seat backrests of the rear bench seat.
- ▶ Slide larger and heavier loads as far forward as possible when looking in the direction of travel. Stack items against each other behind the rear bench seat.
- ▶ Always secure loads with suitable transport aids or lashing materials.

ⓘ

Observe the following notes:

- Do not stack loads higher than the upper edge of the backrests.
- Transport loads behind seats that are not occupied.
- If the rear bench seat is not occupied, insert the seat belts in a crosswise pattern into the opposite belt buckles.

Securing a load

As the driver of the vehicle, you are responsible for ensuring that the load is secured against slipping, tipping over, rolling or falling down, whether driving in normal traffic situations or on poor road surfaces or as a result of having to swerve to avoid an obstacle or applying the brakes fully.

Failing to secure the load in accordance with relevant requirements and sound practice may be a punishable offense, depending on national legislation and the consequences that arise.
For this reason, observe the legal requirements in all countries concerned.

Before each journey and at regular intervals during longer journeys, check whether the load is secure and take additional action to improve any incorrect or inadequate safety measures.

ⓘ

Information about how to secure a load correctly can be obtained from the manufacturers of transport aids or lashing materials for securing loads.

- ▶ Fill up any empty spaces between the load and the load compartment walls or wheel arches in a form-fitting manner. For this purpose, use solid transport aids, such as chocks, wooden blocks or storage cushions.

▶ Secure tilt and tip-resistant loads in all directions by using the lashing points or lashing eyes and load rails in the load compartment or on the load surface, according to your vehicle's equipment.

Only use lashing materials that have been tested according to valid standards, such as lashing nets and straps.

Always use the lashing points closest to the load for securing it in place and place padding around sharp edges.

ℹ

Lashing materials that comply with valid standards can be obtained in any specialist shop or from an authorized Sprinter Dealer.

If possible, use the lashing eyes when securing a load, especially if it is heavy.

Example illustration of crewbus

① Lashing eyes

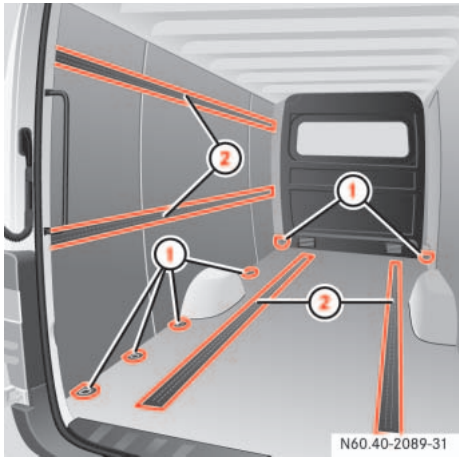

Example illustration of panel van

① Lashing eyes
② Load rails*

Warning

Do not carry out any modifications or repairs to the lashing points, the lashing eyes or the lashing materials. The load or the lashing points could accidentally come loose and cause serious injury to you or others as well as damage to property.

Distribute loads evenly between the lashing points or lashing eyes.

Observe the loading guidelines.

Loose loads should be secured with an approved lashing net or tarp.

▶ Always attach the lashing net or tarps to all available lashing points. While doing so, make sure that the mounting hooks cannot open unintentionally.

CAUTION

Observe the data on the maximum load-bearing capacity of the individual lashing points (▷ page 371).

During full-braking applications, for example, forces can be involved that are much greater than the weight force of the load.
Always use several lashing points in order to distribute force absorption, and make sure that the lashing points have an equal load.

If your vehicle has load rails in the floor, you should position locking rods immediately in front of and behind the load. The locking rods absorb possible shifting forces directly.

Warning

If you tension the lashing straps between the side walls or between a side wall and the load compartment floor, the permissible load for the lashing rails, lashing points or lashing eyes could be exceeded in the event of strong braking, sudden changes of direction or an accident.

The load would no longer be secured, which could result in serious injuries caused by the load slipping.

For this reason, do not tension a lashing strap between the side walls or between a side wall and the load compartment floor. Only locking bars or rods may be installed between the load rails near the side walls.

Observe the operating instructions issued by the locking bar or locking rod manufacturer.

Securing loads to the load compartment floor is only recommended for lightweight loads and should be reinforced by using anti-slip mats.

Warning

Before releasing lashing straps, make sure that the load is stable and would not tip over even without being lashed down.

Otherwise, you or others could be injured by a moving load.

Mounting lashing points for load rails*

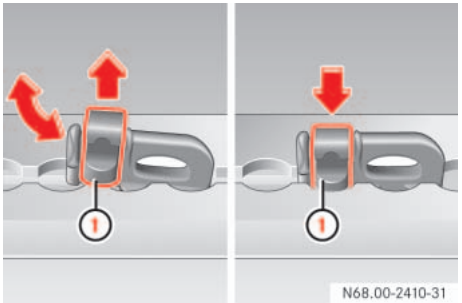

① Locking mechanism

▶ **To install:** slide the lashing eye through a recess in the load rail close to the load until locking mechanism ① in the recess engages.

When you pull locking mechanism ① out of the recess, the lashing eye is able to move within the lashing rail or load rail. Make sure that locking mechanism ① is always engaged in a recess.

Warning

If the lashing eye is not firmly anchored in the load rail, the lashing eye may slip or snap out of the load rail in the event of sudden braking or an accident.

The load would no longer be secured, which could result in serious injuries caused by the load slipping.
For this reason, always check that the lashing eye is firmly in place whenever you install it.

▶ Check whether the lashing eye is firmly in place.

▶ **To remove:** pull locking mechanism ① upward and pull the lashing eye through a recess towards the locking mechanism and out of the load rail.

Carrier systems

It is possible to mount a roof rack if your vehicle is equipped with securing rails on the roof.

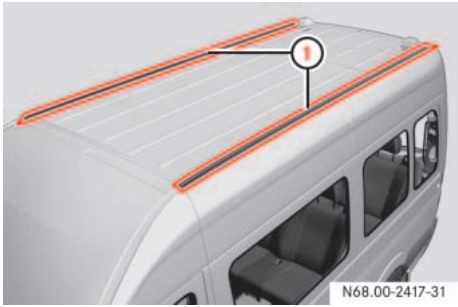

① Securing rails

Special mountings (sliding blocks) are available as accessories. These are available from any authorized Sprinter Dealer.

Warning

Handling and braking characteristics may change when you have mounted carrier systems on the vehicle. You could endanger yourself and others.

Observe the manufacturer's installation instructions. An incorrectly secured carrier system or load could:

- come loose
- fall off

and thereby endanger yourself and others.

Observe the maximum roof loads (▷ page 372), the maximum axle load and the maximum load-bearing capacity of the roof rack.

! CAUTION

Make sure that:

- the securing bolts for the roof rack are tightened to a torque of 6.0 – 7.4 lb-ft (8 – 10 Nm) in the sliding blocks provided
- the bolts do not make contact with the rails when tightened
- the sliding blocks are not positioned near the plastic caps
- the sliding blocks have the correct cross-section
- the securing rails are free of dirt on the inside
- the securing bolts are retightened evenly after approximately 300 miles (500 km)

This will help to avoid damage to the vehicle.

Only install roof racks that have been approved or recommended for Sprinter vehicles. These are available in any authorized Sprinter Dealer.

! CAUTION

If you wish to retrofit securing rails, have them installed at a qualified specialist workshop which has the necessary specialist knowledge and tools to carry out the work required. You could otherwise damage the vehicle.
The manufacturer recommends that you use an authorized Sprinter Dealer for this purpose.

Trailer towing

Observe the instructions in the “Operation” section (▷ page 175).

▼ Features

Interior storage compartments

Warning ⚠

Only load the storage compartments in such a way that occupants cannot be injured by their contents in the event of an accident, braking or a sudden change in direction.

For this reason, do not transport heavy, bulky, pointed or sharp-edged objects in the storage spaces or compartments.

Storage compartments above the windshield

! CAUTION

It is permissible to load the right and left-hand storage compartments up to a maximum of 5.5 lbs (2.5 kg) each.

Storage compartment above the roof trim*

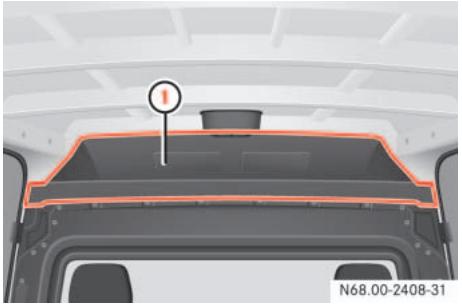

① Storage compartment

! CAUTION

The entire storage compartment is permitted to hold a maximum load of 66 lbs (30 kg).

Do not store high, bulky loads in the storage compartment. You could otherwise damage the roof trim in the event of sudden braking.

Storage compartments in the doors

You can use these storage compartments for the safe storage of small and light items.

Storage compartment under the twin co-driver's seat*

On vehicles with a twin co-driver's seat, the storage compartment is under the seat cushion (▷ page 71).

You can use the storage compartment for the safekeeping of tools and other small items.

Glove box

① Glove box handle
② Locked*
③ Unlocked*

> ℹ
> You can lock and unlock the glove box using the key*.

▶ **To open:** pull glove box handle ① in the direction of the arrow.

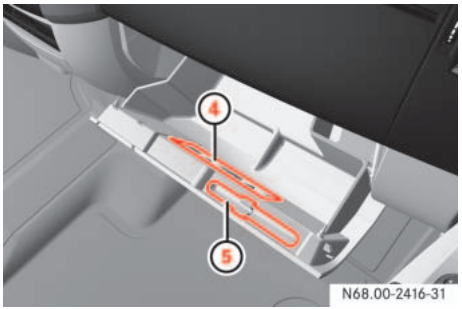

④ Cards holder
⑤ Pen holder

▶ **To close:** fold the cover upwards and push against it until it engages in place.

Storage compartments on the dashboard

Example on the right-hand side

Warning ⚠

Do not store any items in the storage compartment above the co-driver's airbag if they protrude from the compartment. The co-driver's airbag must be able to inflate unimpeded.

> ❗CAUTION
> It is permissible to load the right and left-hand storage compartments up to a maximum of 11 lbs (5 kg) each.

Covered storage compartment above the center console*

① Cover
② Release handle

▶ Pull release handle ②.
Cover ① swings upwards.

ℹ

The cover on the storage compartment must remain closed while the vehicle is in motion.

▶ Close cover ① and engage it.

Eyeglasses compartment

The eyeglasses compartment is located in the overhead control panel.

① Cover

▶ **To open:** press cover ① of the eyeglasses compartment.

The eyeglasses compartment folds out.

▶ **To close:** press cover ① of the eyeglasses compartment into the overhead control panel until it engages.

Folding table in the backrest*

① Folding table

▶ Pull folding table ① forward by the tab.

▶ Fold folding table down in the direction of the arrow and onto the seat cushion.

Cup holders

Warning ⚠

Keep the closeable cup holders closed while the vehicle is in motion and do not leave drinks in the cup holders. You or others could otherwise be injured by objects in the cup holder being thrown around in the event of:

- sharp braking
- a sudden change of direction
- an accident

Only place sealable drinking containers of the correct size in the cup holders. The drinks could otherwise overspill.

Avoid hot drinks. You could otherwise scald yourself.

! CAUTION

Do not use the recesses of the cup holders as an ashtray. You could otherwise damage the cup holders.

Cup holders in the front

Example on the right-hand side

① Cup holder in the storage compartment in the dashboard

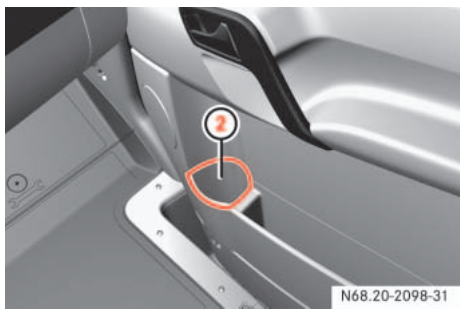

Example on the right-hand side

② Bottle holder in the front door

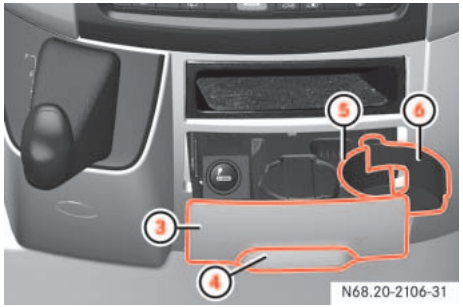

③ Cup holder compartment in the center console
④ Recess
⑤ Cup holder
⑥ Clamping arm

▶ Pull out cup holder compartment ③ by recess ④.

Cup holder ⑤ opens fully.

ℹ

Vehicles with the non-smoking package are equipped with an additional cup holder in place of the ashtray.

ℹ

You can change the diameter of the cup holder.

- Place the container in cup holder ⑤.
- Press clamping arm ⑥ onto the container.

Cup holders in the rear

The cup holders in the rear are located under the seats.

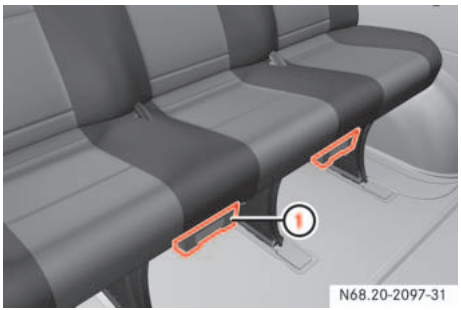

① Cup holder

- Pull out cup holder ①.

Warning

Slide the cup holders back underneath the seat before leaving the vehicle. You could otherwise be injured by the protruding cup holders.

Ashtray

Warning

Switch off the engine and apply the handbrake before removing the ashtray to empty it.
Otherwise, you could accidentally put the vehicle in gear.

The ashtray is located in the ashtray compartment in the center console.

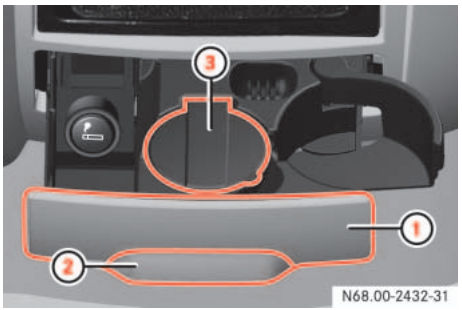

① Ashtray compartment
② Recess
③ Cover

- Pull out ashtray compartment ① by recess ②.
- **To open:** fold cover ③ upwards.
- **To remove the insert:** reach into the left and right-hand sides of the recesses on the ashtray and pull the insert out to empty it.
- **To replace the insert:** hold the insert and press it down into the retainer.

Ashtray in the passenger compartment*

The ashtrays are located on the right-hand and left-hand side in the side trims.

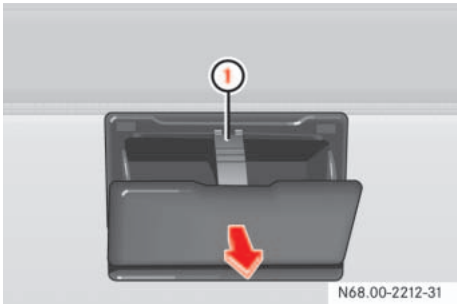

① Retaining clip

- ▶ **To open:** open the ashtray.
- ▶ **To remove the insert:** press clip ① down and remove the entire ashtray from the trim.
- ▶ **To replace the insert:** insert the ashtray at the bottom into the trim and fold it closed.

Cigarette lighter

The cigarette lighter is located next to the ashtray in the ashtray compartment in the center console.

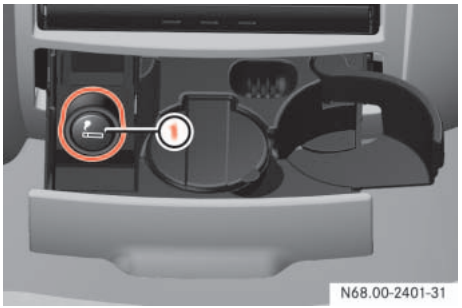

① Cigarette lighter

Warning ⚠

Only hold the hot cigarette lighter by its knob. Otherwise, you may burn yourself.

Remove the cigarette lighter if children are traveling with you. They could injure themselves on a hot cigarette lighter or start a fire.

- ▶ Switch on the ignition (▷ page 67).
- ▶ Press in cigarette lighter ①.

Warning ⚠

Do not press the cigarette lighter in with too much force. The ashtray compartment could otherwise close and trap your finger.

The cigarette lighter will pop out automatically when the heating element is red-hot.

Paper holder

The paper holder is on the control panel for the air-conditioning system.

① Paper holder

▶ Press top of paper holder ①.

12 V socket

The 12 V sockets for accessories are

- on the bottom of the center console (12 V, 25 A)
- on the inside of the driver's seat base (12 V, 15 A)
- in the corner trim next to each rear door in the passenger compartment (12 V, 15 A)
- in the load compartment next to the rear door on the left-hand side (12 V, 15 A)*.

Socket at the bottom of the center console

① 12 V, 25 A socket

You can use the 12 V sockets (15 A) for accessories with a maximum power consumption of 180 watts. You can connect accessories with a maximum power consumption of 300 watts to the 12 V socket (25 A) at the bottom of the center console.

! CAUTION

Only connect the electric air pump* (Premium tire sealant*) to the 12 V socket (25 A) on the bottom of the center console. You could otherwise damage the vehicle electrical system.

For more information about the electric air pump* and the Premium tire sealant*, please refer to the "Practical hints" section (▷ page 303).

ⓘ

The sockets are supplied with power even if the key is removed from the ignition lock. Please note that the battery may be discharged if you have connected an accessory, e.g. a coolbox, and the engine is switched off.

Telephone*

Telephones may only be used inside the vehicle if they are connected to a separate exterior antenna of a type tested and approved by the manufacturer.

Warning

You must observe the legal requirements for the country in which you are driving when operating a cell phone in the vehicle.

If it is permitted to operate a cell phone while the vehicle is in motion, you must only operate it when road and traffic conditions permit. You may otherwise be distracted from the traffic conditions, cause an accident and injure yourself and others.

Cell phones without exterior antennas may interfere with the vehicle electronics and thereby jeopardize the operational safety of the vehicle. You must therefore only use these devices when they are connected to a separate exterior antenna.

The installation of the antenna must be approved by a qualified specialist workshop.

Always have maintenance work carried out at a qualified specialist workshop, e.g. an authorized Sprinter Dealer.

Warning

Only use the telephone when road, weather and traffic conditions permit you to do so. You will otherwise be too distracted. If you are not using the hands-free system, pull over to make a phone call.

Bear in mind that at a speed of just 30 mph (approx. 50 km/h), your vehicle is covering a distance of 44 feet (approx. 14 m) every second.

Telephones without exterior antennas may interfere with the vehicle electronics and thereby jeopardize the operational safety of the vehicle.

Observe all legal requirements.

The cell phone battery will be charged depending on the charge status and the position of the key in the ignition lock. The cell phone display indicates the charging process.

The first 1000 miles (1,500 km) 174
Driving tips 175
Electronic equipment 183
Refueling 184
Engine 185
Battery 195
Battery isolating switch* 197
Tires and wheels 199
Winter driving 234
Maintenance and servicing 237
Cleaning and care of the vehicle 241

The first 1000 miles (1,500 km)

You will find detailed information about operating, maintaining and caring for your vehicle in the “Operation” section.

If you treat the engine with sufficient care from the very start, it will reward you with excellent performance for a very long time afterward.

- You should therefore drive at varying road and engine speeds for the first 1000 miles (1500 km).
- Avoid heavy loads during this time, for example driving at full throttle. Do not exceed $^{2}/_{3}$ of the maximum permissible engine speed for each gear.
- Avoid depressing the accelerator pedal in vehicles beyond the pressure point (kickdown).
- Do not downshift manually in order to brake.
- Only use shift ranges **4, 3, 2** and **1** for slow driving, for example in mountainous terrain.

After 1000 miles (1500 km), you may gradually bring the vehicle up to full road and engine speeds.

▼ Driving tips

Information is available about driving in winter and with snow chains (▷ page 236).

Rail transport

Transporting your vehicle by rail may be subject to certain restrictions or require special measures to be taken in some countries due to varying tunnel heights and loading standards.

You can obtain information at any authorized Sprinter Dealer.

Trailer towing

Warning ⚠

Failure to use proper equipment and driving technique can result in a loss of vehicle control when towing a trailer.

Improper towing or failure to follow the instructions contained in this guide can result in serious injury.

Follow the guidelines below carefully to assure safe trailer operation.

Ask your authorized Sprinter Dealer if you require an explanation of information contained in this guide.

Trailer hitches*

Only install a trailer hitch receiver approved for your vehicle. For information on availability and installation, please see your authorized Sprinter Dealer.

The bumpers on your vehicle are not designed for use with clamp-type hitches. Do not attach rental hitches or other bumper-type hitches to them.

To reduce the possibility of damage, remove the hitch ball adaptor from the receiver when not in use.

Electrical connections*

The Sprinter is available with a variety of pre-installed conditions (lines and turn signal indicator and brake module installed and / or not installed). Make sure that the correct trailer hitch receiver kit is used. For further information, please see your authorized Sprinter Dealer.

In order to prevent possible damage to the vehicle's electrical system by incorrectly installing the trailer wiring plug, we recommend having the harness connected at an authorized Sprinter Dealer.

Trailer towing

Vehicle and trailer weights and ratings

Gross Vehicle Weight Rating (GVWR) is the maximum permissible vehicle weight:

- 8550 lbs (3880 kg) for vehicle model type 2500
- 9990 lbs (4530 kg), or 11030 lbs (5003 kg) for vehicle model type 3500

GVWR (Gross Vehicle Weight Rating)
The total allowable weight of the vehicle. All occupants, all cargo, and the trailer tongue load must never exceed the GVWR.

GAWR (Gross Axle Weight Rating)
The total allowable weight that can be carried by a single axle (front (FA) or rear (RA)).

GCWR (Gross Combination Weight Rating)
The total allowable weight of vehicle and trailer when weighed in combination including a 150 lbs (68 kg) allowance for the presence of a driver.

GTW (Gross Trailer Weight)
The maximum permissible trailer weight to be towed.

TWR (Trailer Tongue Weight Rating)
The maximum permissible weight of the trailer tongue (limit for Sprinter approved hitch receiver).

! CAUTION
Cargo vans with a long wheelbase of 170.3 in (4325 mm) and an overall vehicle length of 289.1 in (7344 mm) have a reduced GTW and TWR.

For the permissible weights and ratings, refer to the following table.

ⓘ
The GVWR and the front/rear GAWR of your vehicle are indicated on the certification label.

! CAUTION
For vehicle model type 3500, the allowable GCWR is less than the combined maximum weight of the GVWR and the GTW. Exceeding the GCWR can cause damage to the drive train, the transmission, or the trailer hitch*.

Thus, the permissible values for GVWR and/or the GTW are reduced when either the trailer or the vehicle is fully laden. you may therefore only partly load the vehicle and/or the trailer.

Sprinter type	GVWR	GAWR (FA)	GAWR (RA)	GCWR	GTW	TWR
2500	8550 lbs (3878 kg)	3970 lbs (1801 kg)	5360 lbs (2431 kg)	13550 lbs (6146 kg)	5000 lbs (2268 kg)	500 lbs (227 kg)
3500	9990 lbs (4531 kg)	4080 lbs (1851 kg) 4410 lbs (2000 kg)*	7060 lbs (3202 kg)	15250 lbs (6917 kg)	7500 lbs (3402 kg) or 5000 lbs (2268 kg)[1]	750 lbs (340 kg) or 500 lbs (227 kg)[1]
3500	11030 lbs (5003 kg)	4080 lbs (1851 kg) 4410 lbs (2000 kg)*	7720 lbs (3502 kg)	15250 lbs (6917 kg)	7500 lbs (3402 kg) or 5000 lbs (2268 kg)[1]	750 lbs (340 kg) or 500 lbs (227 kg)[1]

[1]Cargo vans with a long wheelbase of 170.3in (4325 mm) and an overall vehicle length of 289.1 in (7344 mm) only.
*optional equipment

Loading the vehicle and/or a trailer

When loading the vehicle and/or a trailer, you should observe that the GCWR of your vehicle is not exceeded.

You must distribute total weight between the vehicle and the trailer such that neither the permissible GTW, nor the GVWR and front/rear GAWR , nor the TWR are exceeded.

The tongue weight at the hitch ball must be added to the GVWR to prevent exceeding your Sprinter tow vehicle's rear GAWR.

Maximum permissible values are listed in the table above and on the safety compliance certification labels for the vehicle and for the trailer to be towed. The lowest value listed must be selected when determining how the vehicle and trailer are loaded.

To assure that the vehicle and trailer are in compliance with the maximum permissible weight limits, and to know the actual weights, have the loaded vehicle-trailer combination (tow vehicle including driver, passengers and cargo, trailer fully loaded) weighed on a commercial scale.

Attaching a trailer

Please observe the maximum permitted trailer dimensions (width and length).

Most states and all Canadian provinces require safety chains between your tow vehicle and the trailer. The chains should be crisscrossed under the trailer tongue. They must be attached to the hitch receiver, and not to the vehicle's bumper or axle. Be sure to leave enough slack in the chains to permit turning corners.

Most states and all Canadian provinces require a separate brake system at various trailer weights.

Warning

Do not connect a trailer brake system (if trailer is so equipped) directly to the vehicle's hydraulic brake system as your vehicle is equipped with antilock brakes. If you do, neither the vehicle's brakes nor the trailer's brakes will function properly. This could cause an accident resulting in property damage, injury or death to you or others.

The provided vehicle electrical wiring harness for trailer towing has a brake signal wire for hook-up to a brake controller.

Most states and all Canadian provinces require a break-away switch on trailers with a separate brake system. The switch activates the trailer brakes in the possible event that the trailer might separate from the tow vehicle.

You should consider using a trailer sway control system. For further information, see your authorized Sprinter Dealer.

Towing a trailer

There are many different laws, including speed limit restrictions, having to do with trailer towing. Make sure that your vehicle-trailer combination will be legal, not only for where you reside, but also for where you will be driving. A good source for this information can be the police or local authorities.

Before you start driving with the trailer, check the trailer hitch, break-away switch, safety chains, electrical connections, lighting and tires. Also adjust the mirrors to permit an unobstructed view beyond the rear of the trailer.

If the trailer has electric brakes, start your vehicle and trailer moving slowly, and then apply only the trailer brake controller by hand to be sure that the brakes are working properly.

When towing a trailer, check occasionally to be sure that the load is secure, and that lighting and trailer brakes (if so equipped) are functioning properly.

Always secure items in the trailer to prevent load shifts while driving.

Take into consideration that when towing a trailer, the handling characteristics are different and less stable from those when operating the vehicle without a trailer. It is important to avoid sudden maneuvers.

The vehicle and trailer combination is heavier, and therefore is limited in acceleration and climbing ability, and requires longer stopping distances. It is more prone to reacting to side wind gusts, and requires more sensitive steering input.

In order to gain skill and an understanding of the vehicle's behavior, you should practice turning, stopping and backing up in an area which is free from traffic.

If possible, do not brake abruptly, but rather engage the brake slightly at first to permit the trailer to activate its brake. Then increase the braking force.

Warning

Take into consideration that when towing a trailer, the handling characteristics are different and less stable from those when operating the vehicle without a trailer.

It is important to avoid sudden maneuvers. Sudden maneuvers may lead to loss of control over the vehicle-trailer combination. This could cause an accident resulting in property damage or injury to you or others.

! CAUTION

If the transmission hunts between gears on inclines, manually shift to a lower gear (select "**4**", "**3**", "**2**" or "**1**"). A lower gear and reduction of speed reduces the chance of the engine overloading and / or overheating.

When going down a long hill, shift into a lower gear and use the engine's braking effect. Avoid riding the brakes, thus overheating the vehicle and trailer brakes.

If the engine coolant rises to an extremely high temperature (coolant temperature needle approaching the red zone) when the air conditioner is on, turn off the air conditioner. Engine coolant heat can be additionally vented by opening the windows, switching the climate control fan speed to high and setting the temperature control to the maximum hot position.

Extreme care must be exercised since your vehicle with a trailer will require additional passing distance ahead than when driving without a trailer. Because your vehicle and trailer is longer than your vehicle alone, you will also need to go much farther ahead of the passed vehicle before you can return to your lane.

Operating the vehicle outside the USA or Canada

If you plan to operate your vehicle in foreign countries, please be aware that:

- service facilities or replacement parts may not be readily available,
- unleaded gasoline for vehicles with catalytic converters may not be available; the use of leaded fuels will damage the catalysts,
- gasoline may have a considerably lower octane rating, and improper fuel can cause engine damage.

You will find information about gasoline / diesel in the “Technical data” section (▷ page 358).

ℹ

If you are traveling in countries where vehicles are driven on the opposite side of the road to that in which the vehicle is registered, you must have the headlamps:

- partially masked (halogen headlamps)
- switched over (bi-xenon headlamps)

Relevant information can be obtained at an authorized Sprinter Dealer.

Programmed maximum speed

You can permanently limit the maximum speed of your vehicle to 75 mph (120 km/h).

The manufacturer recommends that you have the maximum speed programmed at an authorized Sprinter Dealer. This has the necessary specialist knowledge and tools to carry out the required work.

Warning ⚠

Exceeding the permissible maximum speed can cause tire damage, which could lead to loss of control of the vehicle.

As the driver, you must find out about the maximum speed of the vehicle and the resulting permissible maximum speed of the tires (tire and tire pressure).

Never exceed the speed limit for your tires under any circumstances (▷ page 222).

Regular checks

Check regularly, e.g. weekly or when refueling:

- the vehicle lighting
- the condition of the tires (▷ page 201) and the tire pressures (▷ page 210)
- the engine oil level (▷ page 187)
- the brake fluid level (▷ page 192)
- the fluid level in the windshield washer system / headlamp cleaning system reservoir (▷ page 193)
- the contamination level of the rear air-conditioning air cleaner (▷ page 240)

Catalytic converter (gasoline engine)

Your vehicle is equipped with monolithic-type catalytic converters, an important element in conjunction with the oxygen sensors to achieve substantial control of the pollutants in the exhaust emissions. Keep your vehicle in proper operating condition by following our recommended maintenance instructions as outlined in your Service Booklet.

! CAUTION

To prevent damage to the catalytic converters, only use premium unleaded gasoline in this vehicle.

Any noticeable irregularities in engine operation should be repaired promptly.

Otherwise, excessive unburned fuel may reach the catalytic converter, causing it to overheat and potentially start a fire.

Warning ⚠

As with any vehicle, do not idle, park or operate this vehicle in areas where combustible materials such as grass, hay, or leaves can come into contact with the hot exhaust system, as these materials could be ignited and cause a vehicle fire.

Oxidation catalyst (diesel engine)

Your vehicle is equipped with an oxidation catalyst, an important element in conjunction with the oxygen sensors to achieve substantial control of the pollutants in the exhaust emissions. Keep your vehicle in proper operating condition by following our recommended maintenance instructions as outlined in your Service Booklet.

Warning ⚠

As with any vehicle, do not idle, park or operate this vehicle in areas where combustible materials such as grass, hay, or leaves can come into contact with the hot exhaust system, as these materials could be ignited and cause a vehicle fire.

Emission control

Certain systems of the engine serve to keep the toxic components of the exhaust gases within permissible limits required by law.

These systems, of course, will function properly only when maintained strictly according to factory specifications. Any adjustments to the engine should therefore be carried out only by an authorized Sprinter Dealer.

Engine adjustments should not be altered in any way. Moreover, the specified service jobs must be carried out regularly according to the manufacturer's servicing requirements. For details refer to the Service Booklet.

Warning

Inhalation of exhaust gas is hazardous to your health. All exhaust gas contains carbon monoxide (CO), and inhaling it can cause unconsciousness and lead to death.

Do not run the engine in confined areas (such as a garage) which are not properly ventilated. If you think that exhaust gas fumes are entering the vehicle while driving, have the cause determined and corrected immediately. If you must drive under these conditions, drive with at least one window fully open at all times.

▼ Electronic equipment

Radio, telephone, two-way radio, fax machine and navigation system

Warning

Please do not forget that your primary responsibility is to drive the vehicle safely.
Only operate the electronic equipment when road and traffic conditions permit. Keep in mind that at a speed of just 30 mph (about 50 km/h), your vehicle travels 44 feet (about 14 m) per second.

A navigation system does not provide information about bridge load-bearing capacities or headroom clearances.
You are responsible for safety at all times.

Observe legal requirements.

Telephones, two-way radios and fax machines without an exterior antenna may interfere with the vehicle's electronics, thereby jeopardizing the vehicle's operating safety. The risk of an accident increases.

Do not use this equipment while the vehicle is in motion.

The vehicle's general operating permit may be invalidated if you do not observe the manufacturer's installation specifications .

You will find information about retrofitting electrical / electronic equipment in the "Technical data" section (▷ page 354).

▼ Refueling

Warning ⚠

Fuel is highly flammable. Fire, naked flames and smoking as well as the use of auxiliary heaters (sparks) are therefore prohibited when handling fuel.

For this reason, switch off the auxiliary heating when refueling.

Warning ⚠

Do not allow fuel to come into contact with your skin or clothing. Your health may be damaged if:

- you spill fuel onto your bare skin
- you inhale fuel vapors

The fuel filler flap is next to the driver's door. You can only open the fuel filler flap when the driver's door is open.

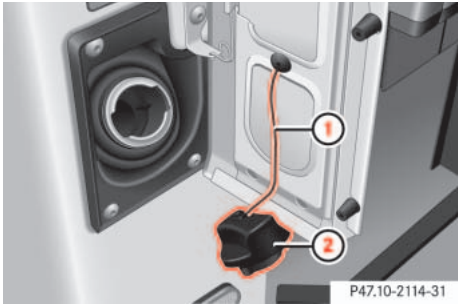

① Retaining strap
② Fuel filler cap

▶ Remove the key from the ignition lock.

▶ Switch off the auxiliary heating.

▶ Open the driver's door.

▶ Open the fuel filler flap.

▶ Close all the vehicle's doors, so that no fuel vapors can enter the vehicle.

▶ Turn fuel filler cap ② counterclockwise and let it hang by retaining strap ①.

▶ Only fill the tank until the pump nozzle switches off.

▶ Replace fuel filler cap ② and turn it clockwise.

A clicking sound indicates that the fuel filler cap is fully closed.

▶ Open the driver's door and close the fuel filler flap.

You will find information about fuel in the "Technical data" section (▷ page 358).

▼ Engine

Hood

Warning ⚠

Do not pull the release lever while the vehicle is in motion. The hood could otherwise open, thereby impairing visibility and leading to loss of control of the vehicle.

For this reason, only open the hood when the vehicle is parked.

Opening

! CAUTION

Make sure that the windshield wipers are not folded away from the windshield. The windshield wipers or the hood may otherwise be damaged.

① Release lever

▶ Pull release lever ① under the instrument panel on the left-hand side in the driver's footwell.

The hood is released.

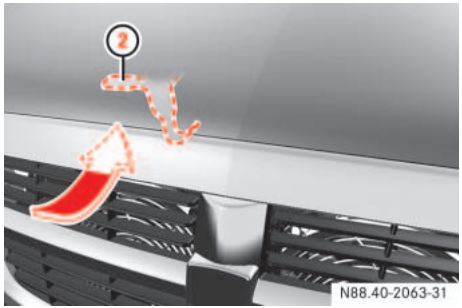

② Securing hook

▶ Push up securing hook lever ②.

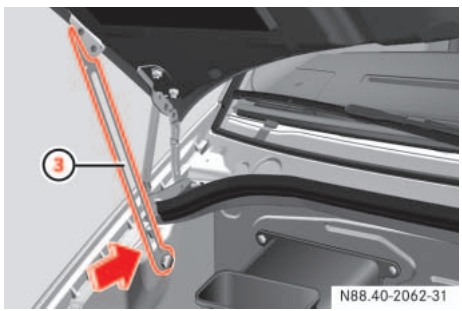

③ Support strut

Warning

If the hood support strut is not engaged, the hood can fall shut. You could be injured.

After opening the hood, you should therefore check whether the support strut is engaged.

▶ Swing the hood upward until support strut ③ engages and the hood is supported.

Warning

Engine parts may be hot and can rotate. There is a risk of injury if the hood is open and the engine is running.

Only open the hood when the engine has stopped and cooled down.

Warning

The engine has an electronic ignition system which carries a high voltage. For this reason, you must never touch the ignition system components (ignition coil, test socket) while:

- the engine is running
- the engine is being started
- the key is in position **2** in the ignition lock and the engine is being cranked by hand

Closing

Warning

Make sure that nobody can become trapped as you close the hood.

Warning

Make sure that the hood is securely engaged before driving off. Do no continue driving if the hood can no longer engage after an accident, for example.

The hood could otherwise come loose while the vehicle is in motion and endanger you and/or others.

▶ Lift the hood gently.

▶ Push back support strut ③ (▷ page 185).

! CAUTION

When you press the support strut back, make sure that you do not press it against the detent position and cause it to bend.

▶ Let the hood drop from a height of approximately 05. ft (30 cm).

The hood engages audibly.

▶ Check to make sure the hood is fully closed.

If the hood can be raised slightly, it is not properly engaged.

▶ Open it again and allow it to drop from a slightly greater height.

! CAUTION

Do not use your hands to push the hood down. Doing so could damage it.

Service products

Mechanical elements and the lubricants used for them must be carefully matched.

For this reason, only brands tested and approved by the manufacturer should be used. Please contact your Sprinter Dealer to obtain the necessary information. No lubricant additives should be used.

The use of such additives could affect your warranty rights. Information is available from any authorized Sprinter Dealer.

For specifications of engine oils, coolant and brake fluid, see "Service products and capacities" (▷ page 355) and contact your authorized Sprinter Dealer.

Warning ⚠

If handled incorrectly, service products can constitute a health risk for people and an environmental hazard.

Always observe relevant guidelines for handling, storing and disposing of service products.

Engine oil

The vehicle consumes a maximum of 1 US qt (1.0 l) oil per 620 miles (1000 km), depending on your driving style.

Engine oil consumption may even be higher if:

- the vehicle is new
- you mainly operate the vehicle under arduous operating conditions
- you often drive at high engine speeds

The engine oil consumption can only be judged after a lengthy distance has been covered.

Check the engine oil level on a regular basis, for example weekly or each time you refuel.

ⓘ

If the oil level exceeds the maximum level several times during operation, have the malfunction rectified immediately at an authorized Sprinter Dealer.

Checking the engine oil level in the display

In vehicles with diesel engines, you can view the engine oil level in the display.

When the oil is being checked, the vehicle must

- be standing level
- be at normal operating temperature
- have been standing with the engine switched off for at least five minutes

ⓘ

If no oil level reading is shown again, check the engine oil level with the dipstick.

Have the engine oil level display checked at an authorized Sprinter Dealer.

! CAUTION

Have any excess oil drained or siphoned off at an authorized Sprinter Dealer. Otherwise, the engine or catalytic converter could be damaged.

ⓘ

If at extremely low temperatures no engine oil level is displayed after 5 minutes, wait a further 5 minutes before repeating the engine oil level check.

▶ Switch on the ignition (▷ page 67).

The display is activated.

Vehicles without steering wheel buttons

▶ Press the Ⓜ menu button on the instrument cluster repeatedly until you see the symbol in the display.

The `--:--` display flashes during the measurement process.

The following messages may be displayed:

OK	▶ Do not add oil.
-1.0 qt	▶ Add the amount of oil shown (▷ page 190).
-1.5 qts	
-2.0 qts	
HI	▶ The engine oil level is too high. Have the oil siphoned off.

ⓘ

Engine oil level display:

- `qt` in USA only
- `l` in Canada only

▶ Check the engine oil level again after a few minutes.

Vehicles with steering wheel buttons*

▶ Press the button on the instrument cluster (▷ page 84).

▶ The following message is displayed for the duration of the measurement process:

Engine oil level Measuring in progress

The following messages may be displayed:

Engine oil level OK	▶ Do not add oil.
Engine oil Add 1.0 quart	▶ Add the amount of oil shown (▷ page 190). ▶ Check the engine oil level again after a few minutes.
Engine oil Add 1.5 quarts	
Engine oil Add 2.0 quarts	
Engine oil level Reduce oil level	▶ The engine oil level is too high. Have the oil siphoned off.
Eng. oil lev. Turn ignition on for level	▶ Switch on the ignition (▷ page 67).
Observe wait. period	▶ Carry out another measurement after approximately 5 minutes when the engine is at normal operating temperature. ▶ Carry out another measurement after approximately 30 minutes when the engine has cooled down.
Engine oil level Not when eng. running	▶ Switch off the engine and wait for approximately 5 minutes if the engine is at normal operating temperature.

ℹ

Engine oil level display:

- quart(s) in USA only
- liter(s) in Canada only

Checking the engine oil level with the dipstick

When the oil is being checked, the vehicle must

- be at normal operating temperature
- be standing level
- have been standing with the engine switched off for at least five minutes

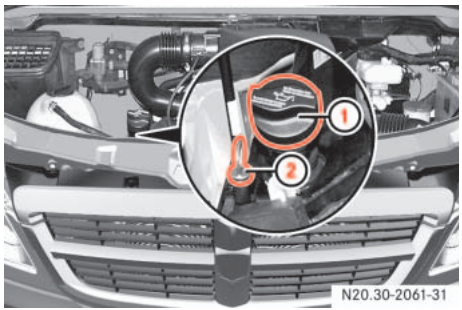

Diesel engine

① Engine oil filler neck
② Engine oil dipstick

Gasoline engine

① Engine oil filler neck
② Engine oil dipstick

▶ Pull out dipstick ②.

▶ Wipe it clean with a lint-free cloth.

▶ Insert it into the dipstick tube as far as the stop and pull it back out.

ℹ

The difference in the quantity of oil between the upper and lower marks on the dipstick is approx.

- 2 US qts (2 l) in vehicles with diesel engines
- 3 US qts (3 l) in vehicles with gasoline engines

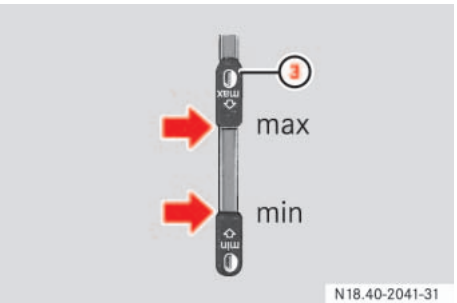

③ Engine oil dipstick

▶ Check the engine oil level.

The oil level is correct if the oil is between the lower **min** and upper **max** marks on the dipstick.

▶ Add engine oil if necessary (▷ page 190).

Adding engine oil

For specifications of engine oils see "Service products and capacities" (▷ page 355).

▶ Unscrew the cap on engine oil filler neck ①.

Make sure that you only fill the engine oil as far as the upper **max** mark.

! CAUTION

Have any excess engine oil drained or siphoned off at an authorized Sprinter Dealer. Otherwise, the engine or catalytic converter could be damaged.

The alternator is underneath the engine oil filler neck. For this reason, add the engine oil carefully. There is a risk of damage to the alternator from engine oil dripping down.

▶ Unscrew the cap on filler neck ①.

Environmental note

When adding oil, take care not to spill any.

No engine oil must be allowed to enter sewage systems, surface water, ground water or soil.
You would otherwise be damaging the environment.

Dispose of engine oil in an environmentally responsible manner. Comply with the manufacturer's instructions.

Coolant

The expansion tank is in the engine compartment. Only add coolant with the vehicle standing on a level surface and with the engine switched off. The coolant temperature must have dropped below 122 °F (50 °C).

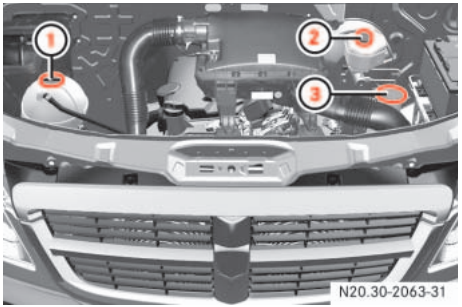

① Coolant tank cap
② Brake fluid reservoir cap
③ Windshield washer reservoir cap

Warning

When opening the coolant expansion tank there is a risk of scalding from hot coolant spraying out. The cooling system and the coolant expansion tank are pressurized when the engine is at normal operating temperature.
Wear gloves and eye protection. Only open the coolant expansion tank when the coolant temperature is less than 122 °F (50 °C).

Warning

Coolant contains glycol and is therefore toxic. Do not swallow coolant. Consult a doctor immediately if any coolant is swallowed.

Do not allow coolant to come into contact with your skin, eyes or clothing. In the event of contact with the eyes, rinse them thoroughly with clean water. Clean skin and clothes immediately with soap and water. Change out of soiled clothing without delay.

▶ Slowly unscrew cap ① counterclockwise to reduce excess pressure.

▶ Continue turning the cap and remove it.

▶ Add coolant as far as the MAX mark.

▶ Twist cap ① back on.

For coolant specifications, see "Service products and capacities" (▷ page 355).

CAUTION

Check the cooling and heating systems regularly for leaks. If a large quantity of coolant is lost, have the cause traced and rectified at an authorized Sprinter Dealer.

Brake fluid

The reservoir is in the engine compartment. Check the brake fluid level:

- regularly, e.g. weekly or when refueling
- only with the vehicle standing on a level surface and with the engine switched off

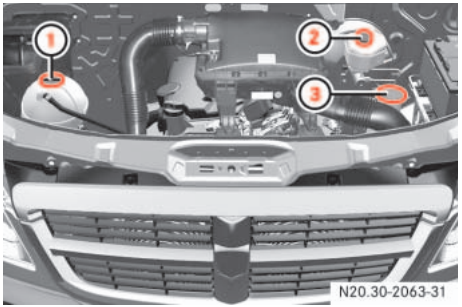

① Coolant tank cap
② Brake fluid reservoir cap
③ Windshield washer reservoir cap

The brake fluid level must be between the MIN and MAX marks.

There is usually a notice in the engine compartment to remind you when the next brake fluid change is due.

CAUTION

Brake fluid corrodes paintwork. If brake fluid comes into contact with the paintwork, immediately rinse with water.

If the brake fluid does not reach the MIN mark, the vehicle's hydraulic system could be malfunctioning. Do not add brake fluid under any circumstances. This will not solve the problem.

Do not drive any further.

Have the system checked immediately at an authorized Sprinter Dealer.

Warning

Brake fluid is hazardous to health. Do not swallow brake fluid. Consult a doctor immediately if any brake fluid is swallowed.

Brake fluid must not come into contact with the skin, eyes or clothing. Wash affected areas with plenty of clean water and consult a doctor immediately if necessary.

▷▷

You should always wear eye protection and gloves when you are adding brake fluid.

Only store brake fluid in its closed original container and keep out of the reach of children. Comply with safety regulations when handling brake fluid.

Warning

If the boiling point of the brake fluid is too low, vapor pockets may form in the brake system when the brakes are applied hard (e.g. when driving on long downhill stretches). This has a detrimental effect on braking efficiency, which could increase the stopping distance. This increases the risk of an accident.
Have the brake fluid replaced every two years.

For specifications of brake fluid, see "Service products and capacities" (▷ page 362).

Windshield washer system/headlamp cleaning system*

The windshield washer reservoir is in the engine compartment. It holds approx. 7.4 US qt (7.0 l).

On vehicles with a headlamp cleaning system, this is also supplied from the windshield washer reservoir.

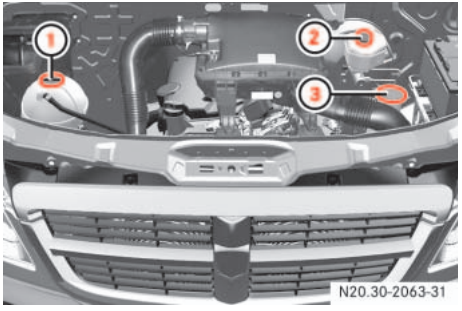

① Coolant tank cap
② Brake fluid reservoir cap
③ Windshield washer reservoir cap

Add windshield washer fluid concentrate to the water all year round.

Warning

Windshield washer concentrate is highly flammable. Fire, open flames and smoking are prohibited when you are handling windshield washer concentrate.

Adapt the mixing ratio to the outside temperature. Use:

- Summerwash to protect against smearing at temperatures above freezing.
- Winterwash when there is a risk of frost so that the water does not freeze onto the windshield.

▶ Mix the windshield washer fluid in a container and in the specified proportions.

▶ Remove cap ③.

▶ Fill up the windshield washer fluid.

▶ Press cap ③ back on.

Vehicle assemblies

Check assemblies regularly for leaks. In the event of fluid loss (e.g. spots of oil under the vehicle when it has been parked), have the cause traced and rectified immediately at an authorized Sprinter Dealer which has the necessary specialist knowledge and tools to carry out the work required.

The manufacturer recommends that you use an authorized Sprinter Dealer for this purpose. All work relevant to safety or on safety-related systems must be carried out at an authorized Sprinter Dealer.

▼ Battery

Your vehicle may be equipped with two batteries, depending on the equipment version:

- Starter battery in the battery recess in the driver's footwell
- Auxiliary battery in the engine compartment*

Warning

Risk of explosion

When batteries are being charged, explosive detonating gas is emitted. Only charge batteries in well-ventilated areas.

Risk of explosion

Because of the risk of explosion, avoid creating sparks from fire, open flames and smoking.

Battery acid is caustic.

Wear acid-proof protective gloves. Neutralize splashes of acid on skin or clothing immediately with soapy water or acid neutralizer and clean with water.

Keep out of the reach of children.

Children cannot appreciate the dangers involved in handling batteries and acid.

Wear eye protection.

When mixing water and acid, the liquid can splash in your eyes. Rinse out your eyes immediately after acid splashes with clean water, and consult a doctor immediately.

When handling batteries, observe the safety precautions and special protective measures contained in these operating instructions.

Environmental note

Pb

Batteries contain pollutants. Do not dispose of old batteries with the household garbage.

Dispose of batteries in an environmentally responsible manner. Take batteries to an authorized Sprinter Dealer or a special collection point for old batteries.

Transport and store full batteries in an upright position. When transporting batteries, secure them so that they do not tip over. Battery acid can spill from the cell cap vents and cause damage to the environment.

Battery

The batteries must always be sufficiently charged so that they achieve their intended service life.

Have the battery charge status checked more frequently if you use the vehicle mainly for short trips or if you leave it parked up for a long period.

If you intend to leave your vehicle parked up for a long period, seek advice from an authorized Sprinter Dealer and switch off the electrical system at the battery isolating switch (▷ page 197).

! CAUTION

Switch off the engine and wait for approximately 20 seconds before you loosen or disconnect the terminal clamps. You could otherwise damage electrical system components.

Care of batteries

! CAUTION

Dirty terminal clamps and battery surfaces cause leakage current, leading to battery discharge. Always keep the terminal clamps and battery surfaces clean and dry. Lightly grease the terminal clamps, particularly the undersides, with acid-proof grease.

Cleaning agents containing fuel can corrode the battery casing. Only clean with commercially available cleaning agents and clean the battery casing with the cell caps screwed in.

You will find further information in the “Practical hints” section (▷ page 335).

You can disconnect the current to all your vehicle's consumers using the battery isolating switch. This will prevent uncontrolled battery discharge caused by quiescent current consumption.

Warning ⚠

If the vehicle is equipped with an auxiliary battery in the engine compartment, it is necessary to disconnect both batteries when working on the vehicle electrical system. Only then is the electrical system fully disconnected from the power supply.

ℹ

Only disconnect the vehicle electrical system from the power supply using the battery isolating switch if the vehicle is to be parked up for a long period or when this is absolutely necessary. After the power supply is switched on, you must reset the electric sliding door (▷ page 57).

The battery isolating switch is to the right of the accelerator pedal in the driver's footwell.

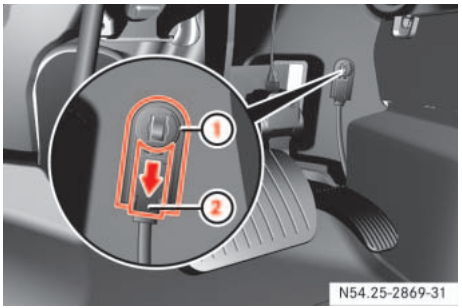

① Connector
② Slide

! CAUTION

Make sure that the key is in position **0** in the ignition lock and wait at least 20 seconds before disconnecting or connecting the battery isolating switch. You could otherwise damage electrical system components.

Switching off the electrical system

▶ Take the key out of the ignition lock and wait for approx. 20 seconds.

▶ Move red slide ② down in the direction of the arrow and disconnect connector ① from the ground pin.

▶ Clamp connector ① under the accelerator pedal so that it cannot make contact with the ground pin.

The consumers of the vehicle battery are cut off from the electrical circuit.

! CAUTION

When you clamp the connector under the accelerator pedal, make sure that the connector does not become:

- dirty
- damaged

It may otherwise not be possible to restore the electrical connection when the parts are reassembled.

Switching on the electrical system

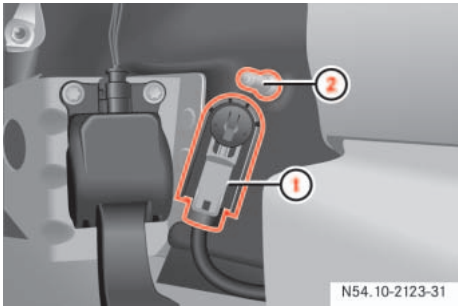

① Connector
② Ground pin

▶ Insert the key into the ignition lock.

▶ Press connector ① onto ground pin ② until you feel it engage and the lock inhibitor is released.

The connector must be in full contact with ground pin ②.

▶ Move the red slide up until it engages.

All consumers are reconnected to the power supply circuit.

▼ Tires and wheels

The tires on a new vehicle provide a balance of many characteristics. They should be inspected regularly for wear and correct cold tire inflation pressure. The vehicle manufacturer strongly recommends using tires equivalent to the originals in size, quality and performance when a replacement becomes necessary.

Refer to the tire and loading information placard on the driver's door B-pillar (▷ page 373) for the size designation of your tire.

The service description and load identification will be found on the original equipment tire. Failure to use equivalent replacement tires may adversely affect the safety, handling, and ride of your Sprinter vehicle.

Contact an authorized Sprinter Dealer or an authorized tire dealer with any questions you may have on tire specifications or capability.

! CAUTION

Only use tires which have been tested and approved for your Sprinter vehicle by the vehicle manufacturer. Tires approved by the vehicle manufacturer are developed to provide the best possible performance in conjunction with the driving safety systems on your Sprinter vehicle such as ABS, BAS, ASR or ESP®.

Using tires other than those approved by the vehicle manufacturer may result in damage that is not covered by the Sprinter warranty.

! CAUTION

Using tires other than those approved by the vehicle manufacturer can have detrimental effects, such as

- poor handling characteristics
- increased noise
- increased fuel consumption

Tires and rims not approved by the vehicle manufacturer may, under load, exhibit dimensional variations and different tire deformation characteristics that could cause them to come into contact with the vehicle body or axle parts. Damage to the tires or the vehicle may be the result.

For more information on tire size designation, load and speed rating, see "Tire labeling" (▷ page 222).

See an authorized Sprinter Dealer for information on tested and recommended rims and tires for summer and winter operation. They can also offer advice concerning tire service and purchase.

Warning

Do not use a tire, wheel size or rating other than that specified for your Sprinter vehicle. Some combinations of unapproved tires and wheels may change suspension dimensions and performance characteristics, resulting in changes to steering, handling, and braking of your Sprinter vehicle. This can cause unpredictable handling and stress to steering and suspension components. You could lose control and have an accident resulting in serious injury or death. Only use the tire and wheel sizes with load ratings approved for your Sprinter vehicle, refer to "Tire and loading information".

Never use a tire with a smaller load index or speed index or capacity other than what was originally equipped on your Sprinter vehicle. Using a tire with a smaller load index could result in tire overloading and failure. You could lose control and have an accident.

Failure to equip the vehicle with tires having adequate speed capability can result in sudden tire failure and loss of vehicle control.

! CAUTION

Replacing original tires with tires of a different size may result in false speedometer and odometer readings.

Warning

Worn, old tires can cause accidents. If the tire tread is badly worn, or if the tires have sustained damage, replace them.

When replacing rims, only use genuine wheel bolts approved by the vehicle manufacturer and specified for the particular rim type. Failure to do so can result in the bolts loosening and possibly an accident.

Do not use retreaded/remolded tires. This process does not always permit previous damage to be detected. Therefore vehicle safety cannot be guaranteed if retreaded/remolded tires are fitted.

Only use wheels and tires which have been tested and approved by the vehicle manufacturer.

Warning

Fitting other wheel sizes to the vehicle will change the vehicle's handling characteristics and may lead to an accident resulting in death, severe personal injuries and property damage.

Only certain tires meeting the tire size/load/speed rating specifications are certified to conform to FMVSS 110 for the Sprinter vehicle at this time. Please check your side walls of your originally equipped tires for specific makes/sizes, and speed load ratings when you need to replace your tires.

To prevent accidents resulting in possible death, severe injury or property damage, use only the tire and wheel sizes with load ratings approved for your Sprinter vehicle for your tire replacement.
Refer to "Tire and loading information" (▷ page 205).

Radial-ply tires

Warning

Combining radial ply tires with other types of tires on your Sprinter vehicle will change the vehicle's handling characteristics and may lead to an accident resulting in death, severe personal injuries and property damage. Always use radial ply tires in sets of 4 (or 6, in case of vehicles with dual rear wheels).

Never combine them with other types of tires.

Cuts and punctures in radial tires are repairable only in the tread area because of side wall flexing. Consult an authorized tire dealer for radial tire repairs.

Tire valves (snap-in valves)

Warning

Sprinter tire valves are tested and approved under rough operating conditions.

The installation of additional hub caps or other wheel simulators could cause damage to the tire valve and lead to a loss of tire pressure at the valve stem.

Do not install any of these parts on your Sprinter vehicle. To help ensure safe and reliable operation of your Sprinter vehicle, only use parts and accessories tested and approved by the vehicle manufacturer for your Sprinter vehicle.

! CAUTION

For safety reasons, the following tire valves from the Schrader company must be used on the vehicles:

- TR 600 for vehicle model type 2500
- TR 418 for vehicle model type 3500

Other tire valves could be damaged by the specified tire pressures.

Important guidelines

- Only use sets of tires and rims of the same type and make.
- Tires must be of the correct size for the rim.
- Break in new tires for approximately 65 miles (100 km) at moderate speeds.
- Regularly check the tires and rims for damage. Dented or bent rims can cause tire inflation pressure loss or damage to the tire beads.
- If the vehicle is heavily loaded, check tire inflation pressure and correct as required.
- Do not allow your tires to wear down too far. Adhesion properties on wet roads are sharply reduced at tread depths under $^{1}/_{8}$ in (3 mm) for summer tires and $^{1}/_{6}$ in (4 mm) for winter tires.

- When replacing individual tires, you should mount new tires on the front wheels first.

Tire care and maintenance

Warning

Regularly check the tires for damage. Damaged tires can cause tire inflation pressure loss. As a result, you could lose control of your vehicle.

Worn, old tires can cause accidents. If the tire tread is badly worn, or if the tires have sustained damage, replace them.

The tire inflation pressure should be checked regularly, i.e. at least each time you refuel the vehicle. The preferred interval for checking the tire inflation pressure, however, is before each trip.

For more information on checking tire inflation pressure, refer to "Recommended tire inflation pressure" (▷ page 210).

Tire inspection

Every time when checking the tire inflation pressure, the tires should also be inspected for the following:

- excessive treadwear, refer to "Tread depth". the condition of the tread depths, i.e. uneven tread wear or excessive treadwear on one side. Turn the front wheels to full lock if necessary to enable you to check the inner edge of the front tires more easily. You must also always check the inside of the tire tread on the rear wheels.
- cord or fabric showing through the tire's rubber
- bumps, bulges, cuts, cracks or splits in the tread or side of the tire
- foreign objects between the tires (on vehicles with twin tires)

Replace the tire if any of the above conditions is found.

Also inspect the spare tire periodically for condition and inflation. Spare tires will age and become worn over time even if never used, and thus should be inspected and replaced when necessary.

Tire damage

Tire damage can be caused by:

- the vehicle's operating conditions
- tire aging
- curbs
- foreign objects
- insufficient or excessive tire pressures
- weather and environmental influences
- contact with oil, grease, fuel, etc.

Warning

Driving over curbs or sharp-edged objects can cause damage to the tire substructure which is not visible from the outside.

Damage to the tire substructure cannot be detected until later and can cause the tire to burst.

▷▷

You could lose control of the vehicle as a result, cause an accident and injure yourself or others.

Avoid driving up against curbs or parking the vehicle with part of the tire tread surface on the curb.

Life of tire

The service life of a tire depends on varying factors including but not limited to:

- Driving style
- Tire inflation pressure
- Distance driven

Warning

Tires and spare tire should be replaced after 6 years, regardless of the remaining tread.

Tread depth

Do not allow your tires to wear down too far. Adhesion properties on wet roads are sharply reduced at tread depths under $^{1}/_{8}$ in (3 mm) for summer tires and $^{1}/_{6}$ in (4 mm) for winter tires.

Treadwear indicators (TWI) are required by law. These indicators are located in six places on the tread circumference and become visible at a tread depth of approximately $^{1}/_{16}$ in (1.6 mm), at which point the tire is considered worn and should be replaced.

Recommended minimum tire tread depth:

- Summer tires $^{1}/_{8}$ in (3 mm)
- Winter tires $^{1}/_{6}$ in (4 mm)

Warning

Although the applicable federal motor safety laws consider a tire to be worn when the Treadwear Indicators (TWI) become visible at approximately $^{1}/_{16}$ in (1.6 mm), we recommend that you do not allow your tires to wear down to that level. As tread depth approaches $^{1}/_{8}$ in (3 mm) for summer tires or $^{1}/_{6}$ in (4 mm) for winter tires, the adhesion properties on a wet road are sharply reduced.

Depending upon the weather and/or road surface (conditions), the tire traction varies widely.

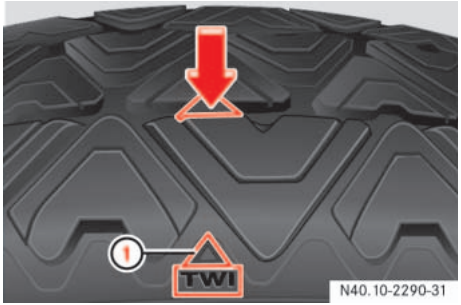

① Treadwear Indicator (TWI)

The Treadwear Indicator appears as a solid band across the tread.

Storing tires

! CAUTION

Keep unmounted tires in a cool, dry place with as little exposure to light as possible. Protect tires from contact with oil, grease and gasoline/diesel.

Cleaning tires

! CAUTION

Never use a round nozzle to power wash tires. The intense jet of water can result in damage to the tire.

Always replace a damaged tire.

Direction of rotation

An arrow on the side wall indicates the intended direction of rotation (spinning) of the tire which means the wheel must be mounted in the direction of rotation.

If a tire does not have an arrow on the side wall indicating the direction of rotation, the wheel can be mounted either way.

ⓘ

The Tire Identification Number (TIN) must always be visible on the outboard side of the tire.

! CAUTION

Spare wheels may be mounted against the direction of rotation (spinning) even with a unidirectional tire for temporary use only until the regular drive wheel has been repaired or replaced. Always observe and follow applicable temporary use restrictions and speed limitations indicated on the spare wheel.

Have a spare wheel that was mounted against the direction of rotation replaced with a regular road wheel as soon as possible.

Loading the vehicle

The following labels on the vehicle show how much weight it may properly carry.

- Only vehicles with a gross weight capacity less than 10,000 lbs (4500 kg)

  The tire and loading information placard can be found on the driver's door B-pillar. This placard tells you important information about the number of people that can be in the vehicle and the total weight that can be carried in the vehicle.

  It also contains information on the proper size and recommended tire inflation pressures for the original equipment tires on your vehicle.

- The certification label can be found below the driver's seat on an outward facing position of the mounting pillar (▷ page 373). This label tells you about the gross weight capacity of your vehicle, called the Gross Vehicle Weight Rating (GVWR). The GVWR includes the weight of the vehicle, all occupants, fuel and cargo. The certification label also tells you about the front and rear axle weight capacity, called the Gross Axle Weight Rating (GAWR). The GAWR is the total allowable weight that can be carried by a single axle (front or rear). Never exceed the GVWR or GAWR for either the front axle or rear axle.

① Tire and loading information placard on driver's door B-pillar

The information below explains how to work with the information contained on the placard with regards to loading your vehicle.

Tire and loading information

Warning ⚠

Do not overload the tires by exceeding the specified load limit as indicated on the tire and loading information placard on the driver's door B-pillar or on the certification label below the driver's seat on the mounting pillar. Overloading the tires can overheat them, possibly causing a blowout. Overloading the tires can also result in handling or steering problems, or brake failure.

Overloading of tires is dangerous. Overloading can cause tire failure, affect vehicle handling, and increase the stopping distance. Use tires of the recommended load capacity for the vehicle. Never overload them.

The vehicle maximum load on the tire must not exceed the load carrying capacity of the tire on your vehicle. You will not exceed the tire's load carrying capacity if you adhere to the loading conditions, tire size and cold tire inflation pressures specified on the tire and loading information placard, tire pressure label and this section.

Placard

For vehicles with a gross weight capacity less than 10,000 lbs (4500 kg) only.

The tire and loading information placard is located on the driver's door B-pillar.

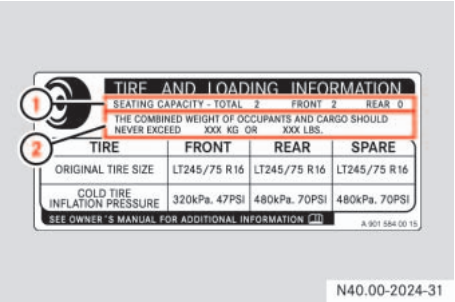

Tire and loading information placard

① Seating capacity
② Load limit information

ℹ

The data shown on this placard is for illustrative purposes only. The load limit data and seating data are specific to each vehicle and may vary from the data shown in the illustration below. Refer to the placard on your vehicle for actual data specific to your vehicle.

Seating capacity

The seating capacity ① gives you important information on the number of occupants that can be in the vehicle. Observe front and rear seating capacity.

Never let more people ride in the vehicle than there are designated seating positions and seat belts available. Make sure that everyone riding in the vehicle is correctly restrained with a separate seat belt.

Load limit information

Locate the statement "The combined weight of occupants and cargo should never exceed XXX kilograms or XXX lbs." ② on the tire and loading information placard. The combined weight of all occupants, cargo/luggage and trailer tongue load (if applicable) should never exceed the weight referenced in that statement.

Steps for determining correct load limit

For vehicles with a gross weight capacity less than 10,000 lbs (4500 kg) only.

The following steps have been developed as required of all manufacturers under Title 49, Code of U.S. Federal Regulations, Part 575 pursuant to the "National Traffic and Motor Vehicle Safety Act of 1966".

Step 1

▶ Locate the statement “The combined weight of occupants and cargo should never exceed XXX kg or XXX lbs.” on your vehicle’s placard.

Step 2

▶ Determine the combined weight of the driver and passengers that will be riding in your vehicle.

Step 3

▶ Subtract the combined weight of the driver and passengers from XXX kilograms or XXX lbs.

Step 4

▶ The resulting figure equals the available amount of cargo and luggage load capacity. For example, if the “XXX” amount equals 1400 lbs and there will be five 150 lbs passengers in your vehicle, the amount of available cargo and luggage load capacity is 650 lbs (1400-750 (5 x150) = 650 lbs).

Step 5

▶ Determine the combined weight of luggage and cargo being loaded on the vehicle. That weight may not safely exceed the available cargo and luggage load capacity calculated in step 4.

Step 6 (if applicable)

▶ If your vehicle will be towing a trailer, load from your trailer will be transferred to your vehicle. Consult this manual to determine how this reduces the available cargo and luggage load capacity of your vehicle.

The following table shows examples on how to calculate total load, cargo load and towing capacities with varying seating configurations and number and size of occupants. The following examples use a load limit of 1500 lbs. **This is for illustrative purposes only**. Make sure you are using the actual load limit for your vehicle stated on the vehicle’s tire and loading information placard (▷ page 206).

The higher the weight of all occupants, the less cargo and luggage load capacity is available.

Example	Combined weight limit of occupants and cargo from placard	Number of occupants (driver and passengers)	Seating configuration	Occupants' weight	Combined weight of all occupants	Available cargo/luggage and trailer tongue weight (total load limit or vehicle capacity weight from placard minus combined weight of all occupants)
1	1500 lbs	5	Front: 2 Rear: 3	Occupant 1: 150 lbs Occupant 2: 180 lbs Occupant 3: 160 lbs Occupant 4: 140 lbs Occupant 5: 120 lbs	750 lbs	1500 lbs - 750 lbs = 750 lbs
2	1500 lbs	3	Front: 1 Rear: 2	Occupant 1: 200 lbs Occupant 2: 190 lbs Occupant 3: 150 lbs	540 lbs	1500 lbs - 540 lbs = 960 lbs
3	1500 lbs	1	Front:1	Occupant 1: 150 lbs	150 lbs	1500 lbs - 150 lbs = 1350 lbs

Certification label

Even after careful determination of the combined weight of all occupants, cargo and the trailer tongue load (if applicable) as to not exceed the permissible load limit, you must make sure that your vehicle never exceeds the Gross Vehicle Weight Rating (GVWR) and the Gross Axle Weight Rating (GAWR) for either the front or rear axle and the Gross Combination Weights Rating (GCWR) (if applicable).

Under a maximum loaded vehicle condition, gross axle weight ratings (GAWR's) for the front and rear axles must not be exceeded.

USA only - for vehicles with a gross weight capacity less than 10,000 lbs (4500 kg) only:
To determine the maximum loading conditions of your vehicle, locate the statement "The combined weight of occupants and cargo should never exceed XXX kg or XXX lbs." on the tire and loading information placard. The combined weight of occupants, cargo/luggage and trailer tongue weight (if applicable) should never exceed the weight referenced here.

You can obtain the GVWR, the front/rear-GAWR and the GCWR from the certification label. The certification label can be found below the driver's seat on an outward facing position of the mounting pillar (▷ page 373).

For more information on the trailer tongue load, refer to "Trailer tongue load".

Gross Vehicle Weight Rating (GVWR):
The total weight of the vehicle, all occupants, all cargo, and the trailer tongue load must never exceed the GVWR.

Gross Axle Weight Rating (GAWR):
The total allowable weight that can be carried by a single axle (front (FA) or rear (RA)).
Gross Combination Weight Rating (GCWR):
The total allowable weight of vehicle and trailer when weighed in cominbation including a 150 lbs (68 kg) allowance for the presence of a driver.

Vehicle Model type	GVWR	GAWR (FA)	GAWR (RA)	GCWR
2500	8550 lbs (3878 kg)	3970 lbs (1801 kg)	5360 lbs (2431 kg)	13550 lbs (6146 kg)
3500	9990 lbs (4531 kg)	4080 lbs (1851 kg) 4410 lbs (2000 kg)*	7060 lbs (3202 kg)	15250 lbs (6917 kg)
	11030 lbs (5003 kg)	4080 lbs (1851 kg) 4410 lbs (2000 kg)	7720 lbs (3502 kg)	15250 lbs (6917 kg)

To assure that your vehicle does not exceed the maximum permissible weight limits (GVWR and GAWR for front and rear axle), have the loaded vehicle (including driver, passengers and all cargo and, if applicable, trailer fully loaded) weighed on a suitable commercial scale.

Trailer tongue load

The tongue load (tongue weight at the hitch ball) of any trailer is an important weight to measure because it affects the load you can carry in your vehicle. If a trailer is towed, the tongue load must be added to the weight of all occupants riding and any cargo you are carrying in the vehicle to prevent exceeding your Sprinter tow vehicle's rear GAWR. The tongue load typically is between 10% and 15% of the trailer weight and everything loaded in it.

For example, if the trailer tongue load equals 140 lbs and the determined available cargo/luggage and trailer tongue weight equals 750 lbs, the amount of available cargo and luggage load capacity is 610 lbs. (750 – 140 = 610 lbs.)

For further information on vehicle and trailer weights and ratings, loading a trailer and trailer towing, see "Trailer towing" (▷ page 175).

Recommended tire inflation pressure

Warning

Follow recommended tire inflation pressures.

Do not underinflate tires. Underinflated tires wear excessively and/or unevenly, adversely affect handling and fuel economy, and are more likely to fail from being overheated.

Do not overinflate tires. Overinflated tires can adversely affect handling and ride comfort, wear unevenly, increase stopping distance, and result in sudden deflation (blowout) because they are more likely to become punctured or damaged by road debris, potholes etc.

Your vehicle is equipped with either the tire and loading information placard[1] or with the tire inflation pressure placard located on the driver's door B-pillar.

① Tire and loading information placard or tire inflation pressure placard on driver's door B-pillar

The tire inflation pressure (including the spare wheel) should be checked regularly and adjusted as well as inspected for signs of tire wear or visible damage. Use a good quality pocket-type gauge to check tire inflation pressure.

1. For vehicles with a gross weight capacity less than 10 000 lbs (4 536 kg) (USA only).

Do not make a visual judgment when determining proper inflation. Radial tires may look properly inflated even when they are underinflated.

The tire inflation pressure should be checked regularly, i.e. at least each time you refuel the vehicle, and should only be adjusted on cold tires. The preferred interval for checking the tire inflation pressure, however, is before each trip.

The tires can be considered cold if the vehicle has been parked for at least 3 hours or driven less than 1 mile (1.6 km) at an ambient temperature of approximately 68 °F (20 °C).

Follow recommended cold tire inflation pressures listed on vehicle placard.

Keeping the tires properly inflated provides the best handling, tread life and riding comfort.

The pressure difference between the tires on a single axle should not exceed 1.5 psi (10 kPa).

In addition to the placard, also consult the tire inflation pressure table (▷ page 370).

For more information, refer to “Important notes on tire inflation pressure”.

Placard

The placard is located on the driver’s door B-pillar.

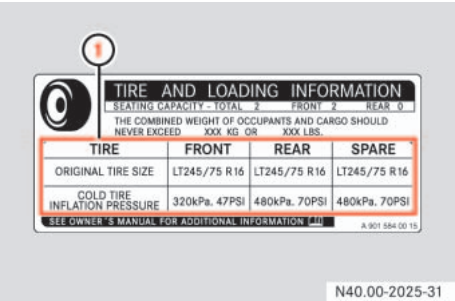

Tire and loading information placard

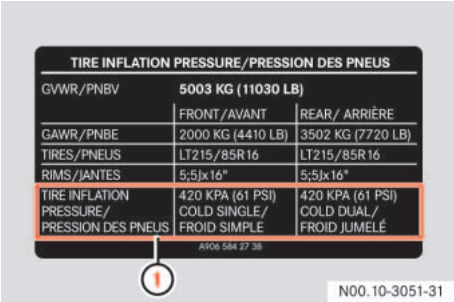

Tire inflation pressure placard

① Recommended cold tire inflation pressure

> ℹ
> The data shown on the tire and loading information placard[1] and on the tire inflation pressure placard is for illustrative purposes only. Tire data is specific to each vehicle and may vary from the data shown in the illustration below. Refer to your vehicle’s placard for actual data specific to your vehicle.

1 For vehicles with a gross weight capacity less than 10 000 lbs (4 536 kg) (USA only).

The placard lists the recommended cold tire inflation pressures for all load conditions up to the maximum permissible weight limits (GAWR). The tire inflation pressures listed apply to the tires installed as original equipment.

Important notes on tire inflation pressure

Warning

If the tire inflation pressure repeatedly drops:

- Check the tires for punctures from foreign objects.
- Check to see whether air is leaking from the valves or from around the rim.

Tire temperature and tire inflation pressure are also increased while driving, depending on the driving speed and the tire load.

Tire inflation pressure changes by approximately 1.5 psi (0.1 bar) per 18 °F (10 °C) of air temperature change. Keep this in mind when checking tire inflation pressure where the temperature is different from the outside temperature.

For example:

If the inside temperature is 68 °F (20 °C) and the outside temperature is 32 °F (0 °C) then the cold tire inflation pressure should be increased by 3 psi (0.2 bar), which equals 1.5 psi (0.1 bar) for every 18 °F (10 °C) for this outside temperature condition.

Check tire pressures more often if subject to a wide range of outdoor temperatures, as tire pressures vary with temperature changes.

Warning

Tire pressure may increase during operation.

Never reduce this normal pressure build up or your tire pressure will be too low.

Underinflated tires wear excessively and/or unevenly, adversely affect handling and fuel economy, and are more likely to fail from being overheated.

Checking tire inflation pressure

The tire inflation pressure should be checked regularly, i.e. at least each time you refuel the vehicle. The preferred interval for checking the tire inflation pressure, however, is before each trip.

The inflation pressures specified either on the tire and loading information placard on the driver's door B-pillar or on tire pressure label below the driver's seat on an outward facing position of the mounting pillar are always cold tire inflation pressures. Check and adjust the tire inflation pressure when the tires are cold. Cold tire inflation pressure is defined as the tire pressure after the vehicle has been parked for at least 3 hours or driven less than 1 mile (1.6 km) at an ambient temperature of approximately 68 °F (20 °C).

The cold tire inflation pressure must not exceed the maximum tire inflation pressure molded into the tire side wall, see "Tire labeling" (▷ page 222).

If you check the tire inflation pressure when the tires are warm (the vehicle has been driven for several miles or sitting less than 3 hours), the reading will be higher than the cold reading. This is normal. Do not let air out to match the specified cold tire inflation pressure. Otherwise, the tire will be underinflated.

Warning

Observe the recommended tire inflation pressures.

Do not underinflate tires. Underinflated tires wear excessively and/or unevenly, adversely affect handling and fuel economy, and are more likely to fail from being overheated.

Do not overinflate tires. Overinflated tires can adversely affect handling and ride comfort, wear unevenly, increase stopping distance, and result in sudden deflation (blowout) because they are more likely to become punctured or damaged by road debris, potholes etc.

Do not overload the tires by exceeding the specified load limit as indicated on the tire and loading information placard on the driver's door B-pillar. Overloading the tires can overheat them, possibly causing a blowout.

Checking tire inflation pressure manually

Follow the steps below to achieve correct tire inflation pressure:

- ▶ Remove the cap from the valve on one tire.
- ▶ Firmly press a tire gauge onto the valve.
- ▶ Read the tire inflation pressure on the tire gauge and compare it with the recommended tire inflation pressure on the placard on the driver's door B-pillar or on the tire pressure label below the driver's seat. If necessary, add air to achieve the recommended tire inflation pressure.

ℹ

If you have overfilled the tire, release tire inflation pressure by pushing the metal stem of the valve with for example a tip of a pen. Then recheck the tire inflation pressure with the tire gauge.

- ▶ Reattach the valve cap.

! CAUTION

After inspecting or adjusting the tire inflation pressure, always reattach the valve cap if equipped.

This will prevent moisture and dirt from entering the valve stem, which could damage the valve stem.

▶ Repeat this procedure for each tire.

Checking tire pressure electronically with the Tire Pressure Monitoring System (TPMS)* (vehicles without steering wheel buttons)

Vehicles without steering wheel buttons are equipped with the Tire Pressure Monitoring System.

ⓘ

USA only:

The Tire Pressure Monitoring System (TPMS) is equipped with a combination low tire pressure/TPMS malfunction telltale in the instrument cluster (▷ page 14). Depending on how the telltale illuminates, it indicates a low tire pressure condition or a malfunction in the TPMS system itself:

- If the telltale illuminates continuously, one or more of your tires is significantly underinflated. There is no malfunction in the TPMS.
- If the telltale flashes for 60 seconds and then stays illuminated, the TPMS system itself is not operating properly.

ⓘ

Canada only:

The Tire Pressure Monitoring System (TPMS) is equipped with a low tire pressure telltale in the instrument cluster (▷ page 14). If the telltale illuminates, one or more of your tires is significantly underinflated.

The TPMS only functions on wheels that are equipped with the proper electronic sensors. It monitors the tire inflation pressure, as selected by the driver, in all four tires. A warning is issued to alert you to a decrease in pressure in one or more of the tires.

Warning ⚠

The TPMS does not warn you against incorrectly selected tire inflation pressure and does not warn you when the tire pressure is not properly selected for the respective vehicle load. It warns you only when the pressure of one or more tires decreases significantly below the reference inflation ▷▷

pressure which was stored at the time of calibration of the TPMS after you inflated the tires.

Always ensure that you re-calibrate the TPMS after you inflated the tires to the recommended cold inflation pressure.

Always adjust tire inflation pressure according to the tire and loading information placard on the driver's door B-pillar.

Underinflated tires wear excessively and/or unevenly, adversely affect handling and fuel economy, and are more likely to fail from being overheated.

Overinflated tires can adversely affect handling and ride comfort, wear unevenly, increase stopping distance, and result in sudden deflation (blowout) because they are more likely to become punctured or damaged by road debris, potholes etc.

The TPMS is not able to issue a warning due to a sudden dramatic loss of pressure (e.g. tire blowout caused by a foreign object). In this case bring the vehicle to a halt by carefully applying the brakes and avoiding abrupt steering maneuvers.

Warning

Each tire, including the spare (if provided), should be checked monthly when cold and inflated to the inflation pressure recommended by the vehicle manufacturer on the tire and loading information placard. (If your vehicle has tires of a different size than the size indicated on the vehicle placard or the tire inflation pressure label, you should determine the proper tire inflation pressure for those tires).

As an added safety feature, your vehicle has been equipped with a Tire Pressure Monitoring System (TPMS) that illuminates a low tire pressure telltale when one or more of your tires is significantly underinflated. Accordingly, when the low tire pressure telltale illuminates, you should stop and check your tires as soon as possible, and inflate them to the proper pressure. Driving on a significantly underinflated tire causes the tire to overheat and can lead to tire failure.

Underinflation also reduces fuel efficiency and tire tread life, and may affect the vehicle's handling and stopping ability. Please note that the TPMS is not a substitute for proper tire maintenance, and it is the driver's responsibility to maintain correct tire pressure, even if underinflation has not reached the level to trigger illumination of the TPMS low tire pressure telltale.

USA only:

Your vehicle has also been equipped with a TPMS malfunction indicator to indicate when the system is not operating properly. The TPMS malfunction indicator is combined with the low tire pressure telltale. When the system detects a malfunction, the telltale will flash for approximately 1 minute and then remain continuously illuminated. This sequence will continue upon subsequent vehicle start-ups as long as the malfunction exists. When the malfunction indicator is illuminated, the system may not be able to detect or signal low tire pressure as intended.

▷▷

TPMS malfunctions may occur for a variety of reasons, including the installation of incompatible replacement or alternate tires or wheels on the vehicle that prevent the TPMS from functioning properly. Always check the TPMS malfunction telltale after replacing one or more tires or wheels on your vehicle to ensure that the replacement or alternate tires and wheels allow the TPMS to continue to function properly.

ⓘ

If a condition causing the TPMS to malfunction develops, it may take up to 10 minutes for the system to signal a malfunction using the TPMS telltale flashing and illumination sequence.

The telltale extinguishes after driving a few minutes if the malfunction has been corrected.

ⓘ

Operating radio transmission equipment (e.g. wireless headsets, two-way radios) in or near the vehicle could cause the TPMS to malfunction

Reactivating the TPMS

The TPMS must be reactivated when you have adjusted the tire inflation pressure to a new level (e.g. because of different load or driving conditions). The TPMS is then recalibrated to the current tire inflation pressures.

Warning ⚠

It is the driver's responsibility to calibrate the TPMS on the recommended cold inflation pressure. Underinflated tires affect the ability to steer or brake the vehicle. You might lose control over the vehicle.

▶ Using the tire and loading information placard on the driver's door B-pillar (▷ page 206), make sure the tire inflation pressure of all four tires is correct.

ⓘ

Reactivate the TPMS after adjusting the tire inflation pressure to the inflation pressure recommended for the vehicle operating condition. Tire pressure should only be adjusted on cold tires. Observe the recommended tire inflation pressure on the tire and loading information placard on the driver's door B-pillar (▷ page 206).

▶ Switch on the ignition (▷ page 67).

▶ Press the 5 menu button on the instrument cluster until you see the `+CAL TPMS` message in the display.

▶ Press the , menu button on the instrument cluster.

The following message is displayed:

OK TPMS

The tire pressure monitor activation process has begun.
The tire pressures of the individual wheels are stored as the new reference values if they are determined to be plausible for the tire pressure monitor.

If you wish to cancel the activation process:

▶ Press the . button or the 5 menu button on the instrument cluster.

The activation process is canceled automatically if 30 seconds elapse with no input.

Checking tire pressure electronically with the Tire Pressure Monitoring System (TPMS)* (vehicles with steering wheel buttons)

Vehicles with steering wheel buttons are equipped with the Advanced Tire Pressure Monitoring System.

ℹ

USA only:

The Tire Pressure Monitoring System (TPMS) is equipped with a combination low tire pressure/TPMS malfunction telltale in the instrument cluster (▷ page 14). Depending on how the telltale illuminates, it indicates a low tire pressure condition or a malfunction in the TPMS system itself:

- If the telltale illuminates continuously, one or more of your tires is significantly underinflated. There is no malfunction in the TPMS.
- If the telltale flashes for 60 seconds and then stays illuminated, the TPMS system itself is not operating properly.

ℹ

Canada only:

The Tire Pressure Monitoring System (TPMS) is equipped with a low tire pressure telltale in the instrument cluster (▷ page 14). If the telltale illuminates, one or more of your tires is significantly underinflated.

The TPMS only functions on wheels that are equipped with the proper electronic sensors. It monitors the tire inflation pressure, as selected by the driver, in all four tires. A warning is issued to alert you to a decrease in pressure in one or more of the tires.

Tire pressure inquiries are made using the multifunction display. The present inflation pressures are displayed only after a few minutes' travel time.

Possible differences between the readings of a tire pressure gauge of an air hose, e.g. gas station equipment, and the vehicle's control system can occur. Usually the readings issued by the control system are more precise.

▶ Switch on the ignition (▷ page 67).

▶ Press the ⇧ or ⇩ button until the current inflation pressures for each tire appear in the multifunction display.

When the message `Tire pres. displayed after driving for several minutes` appears in the multifunction display, the individual inflation pressure values are matched with the tires. The individual values are displayed after a few minutes' driving.

Warning ⚠

It is the driver's responsibility to calibrate the TPMS on the recommended cold inflation pressure. Underinflated tires affect the ability to steer or brake the vehicle. You might lose control over the vehicle.

If a spare wheel without wheel sensors is mounted, the system may still indicate the tire inflation pressure of the removed wheel for some minutes. If this happens, keep in mind that the indicated value where the spare wheel is mounted does not reflect the actual spare tire inflation pressure.

Warning ⚠

The TPMS does not warn you against incorrectly selected tire inflation pressure and does not warn you when the tire pressure is not properly selected for the respective vehicle load. It warns you only when the pressure of one or more tires decreases significantly below the reference inflation pressure which was stored at the time of calibration of the TPMS after you inflated the tires.

Always ensure that you recalibrate the TPMS after you have inflated the tires to the recommended cold inflation pressure. ▷▷

Always adjust the tire inflation pressure according to the tire and loading information placard on the driver's door B-pillar.

Underinflated tires wear excessively and/or unevenly, adversely affect handling and fuel economy, and are more likely to fail from being overheated.

Overinflated tires can adversely affect handling and ride comfort, wear unevenly, increase stopping distance, and result in sudden deflation (blowout) because they are more likely to become punctured or damaged by road debris, potholes etc.

The TPMS is not able to issue a warning due to a sudden dramatic loss of pressure (e.g. tire blowout caused by a foreign object). In this case bring the vehicle to a halt by carefully applying the brakes and avoiding abrupt steering maneuvers.

Warning

Each tire, including the spare (if provided), should be checked monthly when cold and inflated to the inflation pressure recommended by the vehicle manufacturer on the vehicle placard or the tire inflation pressure label. (If your vehicle has tires of a different size than the size indicated on the vehicle placard or the tire inflation pressure label, you should determine the proper tire inflation pressure for those tires).

As an added safety feature, your vehicle has been equipped with a Tire Pressure Monitoring System (TPMS) that illuminates a low tire pressure telltale when one or more of your tires is significantly underinflated. Accordingly, when the low tire pressure telltale illuminates, you should stop and check your tires as soon as possible, and inflate them to the proper pressure. Driving on a significantly underinflated tire causes the tire to overheat and can lead to tire failure.

Underinflation also reduces fuel efficiency and tire tread life, and may affect the vehicle's handling and stopping ability. Please note that the TPMS is not a substitute for proper tire maintenance, and it is the driver's responsibility to maintain correct tire pressure, even if underinflation has not reached the level to trigger illumination of the TPMS low tire pressure telltale.

USA only:

Your vehicle has also been equipped with a TPMS malfunction indicator to indicate when the system is not operating properly. The TPMS malfunction indicator is combined with the low tire pressure telltale. When the system detects a malfunction, the telltale will flash for approximately 1 minute and then remain continuously illuminated. This sequence will continue upon subsequent vehicle start-ups as long as the malfunction exists. When the malfunction indicator is illuminated, the system may not be able to detect or signal low tire pressure as intended.

▷▷

TPMS malfunctions may occur for a variety of reasons, including the installation of incompatible replacement or alternate tires or wheels on the vehicle that prevent the TPMS from functioning properly. Always check the TPMS malfunction telltale after replacing one or more tires or wheels on your vehicle to ensure that the replacement or alternate tires and wheels allow the TPMS to continue to function properly.

ⓘ

If a condition causing the TPMS to malfunction develops, it may take up to 10 minutes for the system to signal a malfunction using the TPMS telltale flashing and illumination sequence.

The telltale extinguishes after driving a few minutes if the malfunction has been corrected.

ⓘ

Operating radio transmission equipment (e.g. wireless headsets, two-way radios) in or near the vehicle could cause the TPMS to malfunction

Reactivating Advanced TPMS

The TPMS must be reactivated when you have adjusted the tire inflation pressure to a new level (e.g. because of different load or driving conditions). The TPMS is then recalibrated to the current tire inflation pressures.

Warning! ⚠

It is the driver's responsibility to calibrate the TPMS on the recommended cold inflation pressure. Underinflated tires affect the ability to steer or brake the vehicle. You might lose control over the vehicle.

▶ Using the tire and loading information placard on the driver's door B-pillar (▷ page 206), make sure the tire inflation pressure of all four tires is correct.

ⓘ

Reactivate the TPMS after adjusting the tire inflation pressure to the inflation pressure recommended for the vehicle operating condition. Tire pressure should only be adjusted on cold tires. Observe the recommended tire inflation pressure on the tire and loading information placard on the driver's door B-pillar (▷ page 206).

▶ Press button or on the multifunction steering wheel repeatedly until the standard display menu appears in the multifunction display (▷ page 93).

▶ Press the ⇧ or ⇩ button repeatedly until you see the current inflation pressures for each tire appear in the display or the following message appears in the display

```
Tire pres. displayed
after driving
for several minutes
```

▶ Press reset button 0 on the instrument cluster (▷ page 14).

The following message will appear in the multifunction display:

```
Tire pres.
Adjust pres.
```

▶ Press + button.

The following message will appear in the multifunction display:

```
Tire pres. monitor
reactivated
```

After a few minutes' driving, the current tire inflation pressure values are accepted as reference values and then monitored.

If you wish to cancel activation:

▶ Press — button.

Potential problems associated with underinflated and overinflated tires

Proper tire inflation pressure is essential to the safe and satisfactory operation of your vehicle. Three primary areas are affected by improper tire inflation pressure:

1. Safety

Warning ⚠

Follow recommended tire inflation pressures.

Do not underinflate tires. Underinflated tires wear excessively and/or unevenly, adversely affect handling and fuel economy, and are more likely to fail from being overheated.

Do not overinflate tires. Overinflated tires can adversely affect handling and ride comfort, wear unevenly, increase stopping distance, and result in sudden deflation (blowout) because they are more likely to become punctured or damaged by road debris, potholes etc.

Warning ⚠

Improperly inflated tires are dangerous and can cause accidents.

Unequal tire inflation pressures can cause steering problems. You could lose control of your vehicle.

Unequal tire inflation pressures from one side of the vehicle to the other can cause the vehicle to drift to the right or left. Always drive with each tire inflated to the recommended cold tire inflation pressure.

2. Economy

Improper inflation pressures can cause uneven wear patterns to develop across the tire tread. These abnormal wear patterns will reduce tread life resulting in a need for earlier tire replacement. Underinflation also increases tire rolling resistance and results in higher fuel consumption. ▷▷

3. Ride comfort and vehicle stability

Proper tire inflation contributes to a comfortable ride. Overinflation produces a jarring and uncomfortable ride.

Tire labeling

Besides the tire name (sales designation) and manufacturer's name, a number of markings can be found on a tire.

Below are some explanations regarding the markings on your vehicle's tires:

> ℹ
> For illustrative purposes only. The actual data on tires is specific to each vehicle and may vary from the data shown in the above illustration.

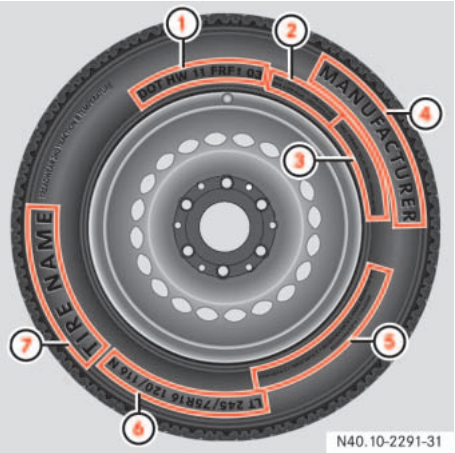

① DOT, Tire Identification Number (TIN) (▷ page 230)
② Maximum tire load (▷ page 226)
③ Maximum tire inflation pressure (▷ page 229)
④ Manufacturer
⑤ Tire ply material (▷ page 228)
⑥ Tire size designation, load and speed rating (▷ page 222)
⑦ Tire name

Tire size designation, load and speed rating

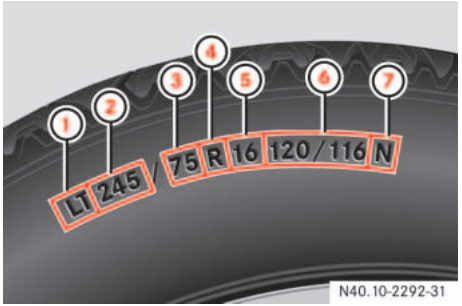

① Design standard
② Tire width
③ Aspect ratio in %
④ Radial tire code
⑤ Rim diameter
⑥ Tire load rating
⑦ Tire speed rating

> ℹ
> For illustrative purposes only. The actual data on tires is specific to each vehicle and may vary from the data shown in the above illustration.

Tire sizes for Sprinter vehicles

Sprinter type	
2500	LT 245/75 R 16 120/116 L
	LT 245/75 R 16 120/116 N
3500	LT 215/85 R 16 115/112 N
	LT 215/85 R 16 115/112 Q

Design standard

Depending on the design standards used, the tire size molded into the side wall may have no letter or a letter ① preceding the tire width or the tire load rating designation.

Letter “LT” preceding the size designation: Light Truck tire based on U.S. design standards.

Letter “C” preceding the tire load designation:
Commercial vehicle tire based on European design standards.

Tire width

The tire width ② indicates the nominal tire width in mm.

Aspect ratio

The aspect ratio ③ is the dimensional relationship between tire section height and section width and is expressed in percentage. The aspect ratio is arrived at by dividing section height by section width.

Tire code

The tire code ④ indicates the tire construction type. The “R” stands for radial tire type. Letter “D” means diagonal or bias ply construction; letter “B” means belted-bias ply construction.

Rim diameter

The rim diameter ⑤ is the diameter of the bead seat, not the diameter of the rim edge. Rim diameter is indicated in inches (in).

Tire load rating

The tire load rating ⑥ is a numerical code associated with the maximum load a tire can support.

For example, a load rating of 120 corresponds to a maximum load of 3042 lbs (1380 kg) the tire is designed to support.

If two values are given (as illustrated), the first value, preceding the slash "/", applies to single tires (rear axle). The second value, succeeding the slash "/", applies to twin tires (dual wheel rear axle).

The commercial vehicle tires based on European standards may have an additional value in the parentheses (as illustrated). In such cases, the value preceding the parentheses is valid for European countries and the parenthesized for the USA and Canada.

Refer also to "Maximum tire load" (▷ page 226) where the maximum load associated with the load index is indicated in kilograms and lbs.

Warning

The tire load rating must always be at least half of the GAWR of your vehicle. Otherwise, tire failure may be the result which may cause an accident and/or serious personal injury to you or others.

Always replace rims and tires with the same designation, manufacturer and type as shown on the original part.

Warning

Do not overload the tires by exceeding the specified load limit as indicated on the placard located on the driver's door B-pillar. Overloading the tires can overheat them, possibly causing a blowout. Overloading the tires can also result in handling or steering problems, or brake failure.

Tire load rating ⑥ and tire speed rating ⑦ are also referred to as "service description".

Tire speed rating

The tire speed rating ⑥ indicates the approved maximum speed for the tire.

The commercial vehicle tires based on European standards may have an additional index in the parentheses. In such cases, the index preceding the parentheses is valid for European countries and the parenthesized for the USA and Canada.

Warning

Even when permitted by law, never operate a vehicle at speeds greater than the maximum speed rating of the tires.

Exceeding the maximum speed for which tires are rated can lead to sudden tire failure, causing loss of vehicle control and possibly resulting in an accident and/or personal injury and possible death, for you and for others.

Always observe the speed rating of the winter tires installed on your Sprinter vehicle. If the maximum speed for which your tires are rated is below the speed rating of your Sprinter vehicle, you must place a notice to this effect where it will be seen by the driver.

Such notices are available at your tire dealer or any authorized Sprinter Dealer.

Index	Speed rating
F	up to 50 mph (80 km/h)
G	up to 56 mph (90 km/h)
J	up to 62 mph (100 km/h)
K	up to 68 mph (110 km/h)
L	up to 74 mph (120 km/h)
M	up to 80 mph (130 km/h)
N	up to 87 mph (140 km/h)
P	up to 93 mph (150 km/h)
Q	up to 100 mph (160 km/h)
R	up to 106 mph (170 km/h)

Tire load rating ⑤ and tire speed rating ⑥ are also referred to as “service description”.

DOT, Tire Identification Number (TIN)

U.S. tire regulations require each new tire manufacturer or tire retreader to mold a TIN into or onto a side wall of each tire produced.

The TIN is a unique identifier which facilitates efforts by tire manufactures to notify purchasers in recall situations or other safety matters concerning tires and gives purchasers the means to easily identify such tires.

The TIN is comprised of the “manufacturer’s identification mark”, “tire size”, “tire type code” and “date of manufacture”.

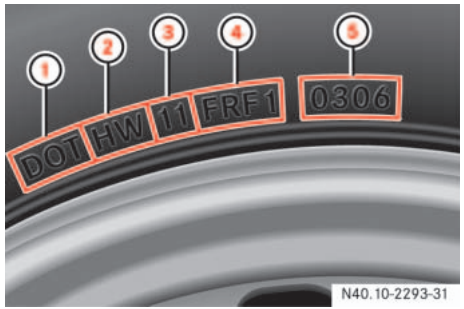

① DOT
② Manufacturer’s identification mark
③ Tire size
④ Tire type code (tire manufacturer's option)
⑤ Date of manufacture

For illustrative purposes only. The actual data on tires is specific to each vehicle and may vary from the data shown in the above illustration.

The TIN may be found on one or both sides of the tire; however, the date code may only be on one side. Tires with white side walls will have the full TIN including date code located on the white side wall side of the tire. Look for the TIN on the outboard side of black side wall tires as mounted on the vehicle.

If the TIN is not found on the outboard side then you will find it on the inboard side of the tire. In this case, the tire must be remounted. Make sure the TIN is visible on the outboard side of the tire and if applicable that the direction of rotation is correct when remounting the tire.

Rotation (spinning) direction, see "Direction of Rotation" (▷ page 204).

DOT (Department Of Transportation)

A tire branding symbol ① which denotes the tire meets requirements of the U.S. Department of Transportation.

Manufacturer's identification mark

The manufacturer's identification mark ② denotes the tire manufacturer.

New tires have a mark with two symbols.

Retreaded tires have a mark with four symbols. For more information on retreaded tires, see (▷ page 199).

Tire size

The code ③ indicates the tire size.

Tire type code

The code ④ may, as the manufacturer's option, be used as a descriptive code for identifying significant characteristics of the tire.

Date of manufacture

The date of manufacture ⑤ identifies the week and year of manufacture.

The first two figures identify the week, starting with "01" to represent the first full week of the calendar year. The second two figures represent the year.

For example, "0301" represents the 3rd week of 2001.

> ℹ
>
> Prior to July 2000, tire manufacturers were only required to have 1 number to represent the year in which the tire was manufactured.
>
> For example, "031" could represent the 3rd week of 1981 or 1991.

If the date of manufacture code indicated on the tire is less than 4 figures, do not use it.

Warning ⚠

Tires and spare tire should be replaced after 6 years, regardless of the remaining tread.

Maximum tire load

① Maximum tire load rating

> ℹ
>
> For illustrative purposes only. The actual data on tires is specific to each vehicle and may vary from the data shown in the above illustration.

The maximum tire load is the maximum weight the tires are designed to support.

Warning

Do not overload the tires by exceeding the specified load limit as indicated on the tire and loading information placard on the driver's door B-pillar. Overloading the tires can overheat them, possibly causing a blowout. Overloading the tires can also result in handling or steering problems, or brake failure.

Never overload them.

The vehicle maximum load on the tire must not exceed the load carrying capacity of the tire on your vehicle.

You will not exceed the tire's load carrying capacity if you adhere to the loading conditions, tire size and cold tire inflation pressures specified on the tire and loading information placard.

For more information on tire load rating, refer to "Tire size designation, load and speed rating" (▷ page 222).

For information on calculating total and cargo load capacities, refer to "Tire and loading information" (▷ page 205).

Maximum tire inflation pressure

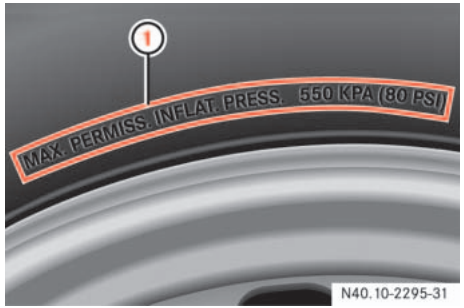

① Maximum permissible tire inflation pressure

For illustrative purposes only. The actual data on tires is specific to each vehicle and may vary from the data shown in the above illustration.

This is the maximum permissible tire inflation pressure for the tire.

Always follow the recommended tire inflation pressure (▷ page 210) for proper tire inflation.

Warning

Never exceed the maximum tire inflation pressure. Follow recommended tire inflation pressures.

Do not underinflate tires. Underinflated tires wear excessively and/or unevenly, adversely affect handling and fuel economy, and are more likely to fail from being overheated.

Do not overinflate tires. Overinflated tires can adversely affect handling and ride comfort, wear unevenly, increase stopping distance, and result in sudden deflation (blowout) because they are more likely to become punctured or damaged by road debris, potholes etc.

Tire ply material

① Plies in side wall
② Plies under tread

> ℹ
> For illustrative purposes only. The actual data on tires is specific to each vehicle and may vary from the data shown in the above illustration.

This marking tells you about the type of cord and number of plies in the side wall and under the tread.

Tire and loading terminology

Accessory weight

The combined weight (in excess of those standard items which may be replaced) of automatic transmission, power steering, power brakes, power windows, power seats, radio, and heater, to the extent that these items are available as factory-installed equipment (whether installed or not).

Air pressure

The amount of air inside the tire pressing outward on each square inch of the tire. Air pressure is expressed in pounds per square inch (psi), or kilopascal (kPa) or bars.

Aspect ratio

Dimensional relationship between the tire section height and the section width expressed in percentage.

Bar

Another metric unit for air pressure. There are 14.5038 pounds per square inch (psi) to 1 bar; there are 100 kilopascals (kPa) to 1 bar.

Bead

The tire bead contains steel wires wrapped by steel cords that hold the tire onto the rim.

Cold tire inflation pressure

Tire inflation pressure when your vehicle has been sitting for at least 3 hours or driven no more than 1 mile (1.6 km).

Curb weight

The weight of a motor vehicle with standard equipment including the maximum capacity of fuel, oil, and coolant, and, if so equipped, air conditioning and additional optional equipment, but without passengers and cargo.

DOT (Department Of Transportation)

A tire branding symbol which denotes that the tire meets the requirements of the U.S. Department of Transportation.

GAWR (Gross Axle Weight Rating)

The GAWR is the maximum permissible axle weight. The gross vehicle weight on each axle must never exceed the GAWR for the front and rear axle indicated on the certification label located on the driver's door B-pillar.

GTW (Gross Trailer Weight)

The GTW is the weight of the trailer plus the weight of all cargo, equipment, luggage etc. loaded on the trailer.

GVW (Gross Vehicle Weight)

The GVW comprises the weight of the vehicle including fuel, tools, spare wheel, installed accessories, passengers and cargo and, if applicable, trailer tongue load. The GVW must never exceed the GVWR indicated on the certification label located on the driver's door B-pillar.

GVWR (Gross Vehicle Weight Rating)

This is the maximum permissible vehicle weight of the fully loaded vehicle (weight of the vehicle including all options, passengers, fuel, and cargo and, if applicable, trailer tongue load). It is indicated on the certification label located on the driver's door B-pillar.

Kilopascal (kPa)

The metric unit for air pressure. There are 6.9 kPa to 1 psi; another metric unit for air pressure is bars. there are 100 kilopascals (kPa) to 1 bar.

Maximum load rating

The maximum load in kilograms and pounds that can be carried by the tire.

Maximum loaded vehicle weight

The sum of curb weight, accessory weight, vehicle capacity weight and production options weight.

Maximum tire inflation pressure

This number is the greatest amount of air pressure that should ever be put in the tire under normal driving conditions.

Normal occupant weight

The number of occupants the vehicle is designed to seat, multiplied by 68 kilograms (150 lbs).

Occupant distribution

The distribution of occupants in a vehicle at their designated seating positions.

Production options weight

The combined weight of those installed regular production options weighing over 5 lbs (2.3 kilograms) in excess of those standard items which they replace, not previously considered in curb weight or accessory weight, including heavy duty brakes, ride levelers, roof rack, heavy duty battery, and special trim.

PSI (Pounds per Square Inch)

A standard unit of measure for air pressure. Another metric unit for air pressure is bar or kilopascal (kPa).

Recommended tire inflation pressure

Recommended tire inflation pressure listed on the placard located on driver's door B-pillar for normal driving conditions. Provides best handling, tread life and riding comfort.

Rim

A metal support for a tire or a tire and tube assembly upon which the tire beads are seated.

Side wall

The portion of a tire between the tread and the bead.

TIN (Tire Identification Number)

Unique identifier which facilitates efforts by tire manufacturers to notify purchasers in recall situations or other safety matters concerning tires and gives purchases the means to easily identify such tires. The TIN is comprised of the "manufacturer's identification mark", "tire size", "tire type code" and "date of manufacture".

Tire load rating

Numerical code associated with the maximum load a tire can support.

Tire ply composition and material used

This indicates the number of plies or the number of layers of rubber-coated fabric in the tire tread and side wall. Tire manufacturers also must indicate the ply materials in the tire and side wall, which include steel, nylon, polyester, and others.

Tire speed rating

Part of tire designation; indicates the speed range for which a tire is approved.

Traction

Force exerted by the vehicle on the road via the tires. The amount of grip provided.

Tread

The portion of a tire that comes into contact with the road.

Treadwear Indicators

Narrow bands, sometimes called "wear bars" that show across the tread of a tire when only $^{1}/_{16}$ in (1.6 mm) of tread remains.

TWR (Tongue Weight Rating)

Maximum permissible weight on the trailer tongue.

Uniform tire quality grading standards

A tire information system that provides consumers with ratings for a tire's traction, temperature and treadwear. Ratings are determined by tire manufacturers using government testing procedures. The ratings are molded into the side wall of the tire.

Vehicle capacity weight

Rated cargo and luggage load plus 68 kilograms (150 lbs) times the vehicle's designated seating capacity.

Vehicle maximum load on the tire

Load on an individual tire that is determined by distributing to each axle its share of the maximum loaded vehicle weight and dividing it by two.

Rotating tires

Warning

Rotate front and rear wheels only if they are of the same dimension.

Changing the tire dimension for an axle

- could cause the tire to come into contact with the vehicle body or axle parts. Damage to the tire or the vehicle may be the result.
- could result in changes to steering, handling, and braking of your Sprinter vehicle. This can cause unpredictable handling and stress to steering and suspension components. You could lose control and have an accident resulting in serious injury or death.
- could result in tire overloading and failure, if the tires' load index are not identical. You could lose control and have an accident.

Tires on the front and rear axles of vehicles operate at different loads and perform different steering, driving and braking functions. For these reasons, they wear at unequal rates, and develop irregular wear patterns. These effects can be reduced by timely rotation of tires.

The benefits of rotation are especially worthwhile with aggressive tread designs such as those on On/Off Road type tires. Rotation will increase tread life, help to maintain mud, snow, and wet traction levels, and contribute to a smooth ride.

If applicable to your vehicle's tire configuration, tires can be rotated according to the tire manufacturer's recommended intervals in the tire manufacturer's warranty pamphlet located in your vehicle literature portfolio. If none is available, tires should be rotated every 10,000 miles (16,000 km), or sooner if necessary, according to the degree of tire wear.

The same rotation (spinning) direction must be maintained when mounted, see "Direction of rotation" (▷ page 204).

Rotate tires before the characteristic tire wear pattern becomes visible (shoulder wear on front tires and tread center wear on rear tires).

The reasons for any rapid or unusual wear should be corrected prior to rotation being performed.

! CAUTION

If your vehicle is equipped with the tire pressure monitor*, each wheel has an electronic component.

Tire mounting tools should not be applied in the area of the valve, as this could damage the electronic components.

Have the tires changed only at an authorized Sprinter Dealer.

Thoroughly clean the mounting face of wheels and brake disks, i.e. the inner side of the wheels/tires, during each rotation.

Check for and ensure proper tire inflation pressure, refer to "Recommended tire inflation pressure" (▷ page 210).

Warning ⚠

In order to avoid loosing a wheel and in order to reduce the risk of fatal or serious injuries or vehicle damage, please follow these safety instructions:

- Always replace wheel bolts that are damaged or rusted.
- Never apply oil or grease to wheel bolts.
- If a wheel hub thread is damaged, you must not drive the vehicle. Consult an authorized Sprinter Dealer.

  Only use genuine wheel bolts approved by the vehicle manufacturer and specified for your vehicle's rims. Check tightness of wheel bolts or nuts regularly and retighten with a torque wrench, if necessary. Tighten wheel bolts or nuts in a crisscross pattern. For information on mounting bolts and tightening torques, refer to "Installing a wheel" (▷ page 320).
- After changing a wheel, the wheel bolts or nuts must be retightened after the vehicle has been driven for about 30 miles (50 km).
- If new or repainted rims are fitted, the wheel bolts or nuts must be retightened again after about 600 to 3000 miles (about 1000 to 5000 km).

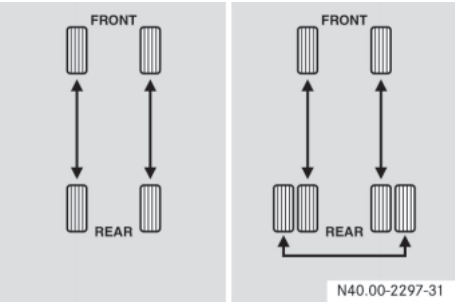

Rotation pattern for single and dual rear wheels

Single rear wheels:

▶ Rotate the tires by axle. Never change the direction of rotation of your tires.

▶ Make sure that on one axle just one type of tire (same size, type construction, load and speed rating) is used.

Dual rear wheels:

- ▶ Rotate front tires by axle and the outer rear tire side to side if there is no approved direction of rotation.

  The tires used on dual wheel assemblies should be matched for wear to prevent overloading one tire in a set.

- ▶ To check if tires are even, lay a straight edge across all four tires.
  The straight edge should touch all the tires.

! CAUTION

3500 dual rear tires have only one approved direction of rotation. This is to accommodate the asymmetrical design (tread pattern) of the ON/OFF road tire and the use of Outline White Letter (OWL) tires.
When replacing a flat tire, the spare tire may have to be remounted on the rim or installed at a different location to maintain the correct placement of the tire on the wheel relative to the tire/wheel position on the vehicle. For example, if the spare is used to replace an outer rear tire it will have to remounted on the rim so that the wheel is dished inward.

That way the tread design of asymmetrical tires and the white writing of the OWL tires will maintain proper position.

For information on wheel change, see the “Practical hints” section (▷ page 320).

▼ Winter driving

Have your vehicle winterproofed at the onset of winter at an authorized Sprinter Dealer. This service includes the following:

- Oil change, if the current engine oil used has not been approved for winter use
- The antifreeze / anti-corrosion concentration in the coolant is checked
- The addition of a concentrated cleaning agent to the water in the windshield washer system
- Battery check
- A tire change

You will find information about diesel fuel for use at low outside temperatures in the “Technical data” section (▷ page 360).

Please also observe the information about winter driving (▷ page 235).

Winter tires

Always use winter tires at temperatures below 45 °F (7 °C) and whenever wintry road conditions prevail. Winter tires should be of the same size and type construction as the summer tires.

Winter tires should also be operated as printed on the tire and loading information placard, refer to "Tires and wheels" (▷ page 199). Not all M+S rated radial-ply tires provide special winter performance. Make sure the tires you use show M+S and the mountain/snowflake marking on the tire side wall. These tires meet specific snow traction performance requirements of the Rubber Manufacturers Association (RMA) and the Rubber Association of Canada (RAC) and have been designed specifically for use in snow conditions. Use of winter tires is the only way to achieve the maximum effectiveness of the ABS, BAS, ASR and ESP® in winter operation.

For safe handling, make sure all winter tires mounted are of the same make and have the same tread design.

Warning

Winter tires with a tread depth under 1/6 in (4 mm) must be replaced. They are no longer suitable for winter operation.

Always observe the speed rating of the winter tires installed on your vehicle. If the maximum speed for which your tires are rated is below the speed rating of your vehicle, you must place a notice to this effect where it will be seen by the driver. Such notices are available at your tire dealer or any authorized Sprinter Dealer.

▶ Reactivate the tire pressure monitor.

While studded tires improve performance on ice, skid and traction capability on wet or dry surfaces may be poorer than that of non-studded tires. Some states prohibit studded tires; therefore, local laws should be checked before using these tire types.

Warning

If you use your spare tire when winter tires are fitted on the other wheels, be aware that the difference in tire characteristics may impair turning stability and overall driving stability may be reduced. Adapt your driving style accordingly.

Have the spare tire replaced with a winter tire at the nearest authorized Sprinter Dealer.

When they have been removed, store wheels and tires in a cool, dry, and if possible dark place. Protect the tires from oil, grease, and gasoline / diesel.

Driving in winter

Warning

Downshifting to brake could cause the drive wheels to lose grip on a slippery surface due to the increased difference in speed between the engine and the drive wheels at this time.

Do not downshift for additional engine braking on a slippery surface. Use the service brake in accordance with road conditions. Only downshift to a lower gear when traveling at a low engine speed.

Drive with particular care on icy roads. Avoid sudden acceleration, steering movements and braking.

If it seems likely that the vehicle is about to enter a skid or cannot be stopped at a low speed:

- Move the selector lever to position **N**.
- Try to maintain control of the vehicle using light corrective steering.

Road salt may adversely affect braking efficiency. It may therefore be necessary to apply the brakes more forcefully in order to achieve the same braking force as normal.

Apply the brakes regularly when making longer journeys on gritted or salted roads. This will have the effect of restoring the brakes to their normal level of performance.

When stopping the vehicle after traveling on roads that have been salted, check that the brakes are fully functional before proceeding further.

Snow chains

Use "Class U" chains, or other traction aids that meet SAE Type "U" specifications.

Snow chains must be the proper size for the vehicle, as recommended by the chain manufacturer. They should only be driven on snow-covered roads at speeds not to exceed 30 mph (50 km/h). Remove chains as soon as possible when driving on roads without snow.

! CAUTION

Use snow chains on rear wheels only.

Some tire sizes do not leave adequate clearance for snow chains. To help avoid serious damage to your vehicle or tires, use of snow chains is not permissible with the spare wheel.

i

When driving with snow chains, you may wish to deactivate the ASR (▷ page 44) before setting the vehicle in motion. This will improve the vehicle's traction.

Please observe the following guidelines when using snow chains:

- Snow chains should only be used on rear wheels. In vehicles with dual rear wheels, they should be mounted on the exterior wheels. Follow the manufacturer's mounting instructions.
- Only use snow chains that are approved by the vehicle manufacturer. For approved snow chains, please contact your authorized Sprinter Dealer.
- Use of snow chains may be prohibited depending on location. Always check local and state laws before mounting snow chains.

To avoid damage to your vehicle, tires or chains, observe the following precautions:

- Because of limited chain clearance between tires and other suspension components, it is important that only chains in good condition are used. Broken chains can cause serious vehicle damage. Stop the vehicle immediately if noise occurs that could suggest chain breakage. Remove the damaged parts of the chain before further use.
- Install chains as tightly as possible and then retighten after driving about 1/2 mile (0.8 km).
- Do not exceed 30 mph (50 km/h).
- Drive cautiously and avoid severe turns and large bumps, especially with a loaded vehicle.
- Do not install tire chains on front wheels.
- Do not drive for a prolonged period on dry pavement.
- Observe the tire chain manufacturer's instructions on method of installation, operating speed, and conditions for usage. Always use the lower suggested operating speed of the chain manufacturer if different than the speed recommended by the manufacturer.

▼ Maintenance and servicing

Warning ⚠

Before carrying out maintenance operations and repairs, please make sure that you read the relevant sections of the technical documentation, such as:

- Operating instructions and workshop information

Familiarize yourself in advance in particular with legal requirements, such as:

- Safety at work and accident prevention regulations.

You may otherwise fail to recognize dangers and could injure yourself or others.

When working underneath the vehicle, you must place the vehicle on stands with sufficient load-bearing capacity.

Never use the vehicle jack instead. There is a risk that the vehicle jack could give way and the vehicle could drop, seriously injuring yourself or others, or causing damage to property.

The jack is only designed to raise the vehicle for a short time.

Always have the maintenance work carried out and checked at an authorized Sprinter Dealer which has the necessary specialist knowledge and tools to carry out the work required.

The manufacturer recommends that you use an authorized Sprinter Dealer for this purpose. In particular, work relevant to safety or on safety-related systems must be carried out at an authorized Sprinter Dealer.

Service products

Mechanical elements and the lubricants used for them must be carefully matched.

For this reason, only brands tested and approved by the manufacturer should be used. Please contact your Sprinter Dealer to obtain the necessary information. No lubricant additives should be used.

The use of such additives could affect your warranty rights. Information is available from any authorized Sprinter Dealer.

For specifications of engine oils, coolant and brake fluid, see "Service products and capacities" (▷ page 355) and contact your authorized Sprinter Dealer.

Observe the information on spare parts in the “Technical data” section (▷ page 352).

Warning

If handled incorrectly, service products can constitute a health risk for people and an environmental hazard.

Always observe relevant guidelines for handling, storing and disposing of service products.

Active Service System (ASSYST)*

ASSYST, the Active Service System, informs you when the next service is due.

A service that is due is displayed about a month or 1900 miles (3000 km) in advance. A message is then displayed while the vehicle is in motion or the ignition is switched on.

! CAUTION

Periods when the battery is disconnected will not be recorded by ASSYST. To make sure that you have the vehicle serviced at the correct time, you should therefore subtract periods when the battery is disconnected from the days shown.

The service indicator does not provide information about the engine oil level. The service indicator should not, therefore, be confused with the engine oil level display.

The service due date is displayed in days or kilometers, depending on the total distance driven.

The time between the individual service due dates depends on your style of driving. You can increase this by:

- driving with care and at a moderate engine speed
- avoiding short journeys where the engine does not reach the operating temperature

Service due date display

Vehicles with steering wheel buttons

The following messages may be displayed:

- Service A in .. days
- Service A in .. miles (km)
- Service A due now

The letters A or B indicate the type of service that is due.

Vehicles without steering wheel buttons

The following messages may be displayed:

- for service A
- for service B

The following are also shown, depending on the style of driving:

- the remaining distance in kilometers, e.g. 1900 miles (3000 km)
- the remaining time in days, e.g. 30 days.

Missing the service due date

An authorized Sprinter Dealer, can reset the service indicator when the service has been carried out.

> **!** CAUTION
> If you fail to have the specified service carried out, you could be in breach of relevant regulations and warranty and goodwill settlements could be invalidated.

Vehicles with steering wheel buttons*

If you have missed the service due date, one of the following messages appears in the display:

- Service A overdue by .. days
- Service A overdue by .. miles (km)

A signal also sounds.

Vehicles without steering wheel buttons

If you have missed the service due date, the following symbol flashes in the display for 10 seconds after the ignition is switched on:

- for service A
- for service B

You will also see a minus sign before the service due date.

Calling up the service due date

▶ Switch on the ignition (▷ page 67).

The display is activated.

Vehicles with steering wheel buttons*

▶ Press the or button on the steering wheel repeatedly until you see the standard display (▷ page 89) .

▶ Press the or button on the steering wheel repeatedly until you see the following in the display, for example:

- Service A in .. days
- Service A in .. miles (km)

The letters A or B indicate the type of service that is due. ▷▷

Vehicles without steering wheel buttons

▶ Press the Ⓜ menu button on the instrument cluster repeatedly until you see the following in the display:

- for service A
- for service B

The following are also shown, depending on the style of driving:

- the remaining distance in miles (kilometers)
- the remaining time in days

Air cleaner for the air-conditioning system in the rear compartment*

An increased amount of sand or dust may collect in the air cleaner when you drive on dusty or sandy roads.

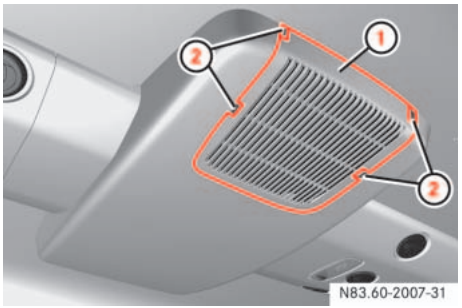

Air cleaner in the roof in the rear compartment

① Cover
② Recesses

! CAUTION
You must clean visible dirt from the air cleaner or replace it if necessary. The dirt can otherwise damage the air conditioning, which is not covered by warranty.

For this reason, check the air cleaner regularly for visible damage.

Removing the air cleaner element

▶ Carefully pry cover ① out of recesses ② and remove it.

▶ Remove the filter mat.

Cleaning the filter mat

▶ Wash the filter mat with clean water.

▶ Leave the filter mat to dry.

! CAUTION
The filter mat must not be cleaned or dried in a machine.

Installing the air cleaner element

▶ Insert the filter mat.

▶ Attach cover ①.

▼ Cleaning and care of the vehicle

Regular and proper care will help to maintain the value of your vehicle. The best way to protect your vehicle from harmful environmental influences is to wash it and use protective treatments regularly.

ℹ

It is recommended that you use Mopar care products. These have been specially adapted to Sprinter vehicles and are state of the art. Mopar care products are available from any authorized Sprinter Dealer.

Scratches, corrosive deposits, areas affected by corrosion and damage caused by neglect or inadequate care cannot always be completely remedied. In such cases, visit an authorized Sprinter Dealer.

Repair damage caused by loose chippings and remove the following substances immediately:

- Insect remains
- Bird droppings
- Tree resin
- Oils and grease
- Fuel
- Tar stains

Wash the vehicle more frequently in winter to remove salt residue.

Warning ⚠

Always follow the instructions for using the care products.

Always keep care products sealed and out of the reach of children.

Do not use fuel as a cleaning agent. Fuel is flammable and constitutes a health hazard.

Environmental note

Only clean the vehicle in a suitable place for washing vehicles. Dispose of empty containers and used cleaning materials in an environmentally responsible manner.

ℹ

If you need to clean the areas towards the top of the vehicle, always use

- suitable ladders
- secure steps

! CAUTION

Under no circumstances should you affix unsuitable stickers, films, magnets or similar to painted surfaces. You could otherwise damage the paintwork.

Care of the vehicle

! CAUTION

After cleaning your vehicle, especially the wheel rims with rim cleaner, do not simply park the vehicle and leave it. Rim cleaners can promote corrosion of the brake discs and the brake pads / linings. Before parking and leaving the vehicle after cleaning, always warm the vehicle up to normal operating temperature first.

Automatic car wash

You can clean the vehicle in an automatic car wash from the very start. It is preferable to use a car wash that does not have brushes.

If the vehicle is very dirty, prewash it before you drive into the car wash.

▶ Remove the radio / telephone antenna and fold the exterior mirrors in before driving into the automatic car wash.

! CAUTION

Make sure that the automatic car wash is suitable for the size of the vehicle.

If you do not remove the radio / telephone antenna and fold in the exterior mirrors, there is a possibility that the antenna, the exterior mirrors or the vehicle could be damaged by the automatic car wash.

! CAUTION

Make sure that the windshield wiper switch is set to **0** (▷ page 126), otherwise the rain sensor could be activated, for example, and the windshield wipers could be triggered unintentionally. This could cause damage to the vehicle.

After using an automatic car wash, wipe off wax from the windshield and the wiper blades. This prevents smears and reduces wiping noises which can be caused by residue on the windshield.

High-pressure cleaners

! CAUTION

Do not use high-pressure cleaners with round-spray jets for cleaning the tires. You could otherwise damage the tires. Have damaged tires replaced.

▶ The minimum distance that must be maintained between the vehicle and the nozzle of the high-pressure cleaner is:

- approximately 2.2 ft (70 cm) for round-spray jets
- approximately 1 ft (30 cm) for 25° flat-spray jets and concentrated-power jets

▶ Move the high-pressure cleaner nozzle around when cleaning your vehicle.

! CAUTION

To avoid damage, do not aim directly at the door joints, brake hoses, electrical components, connectors or seals.

Steps

Warning ⚠

Dirty or iced-up steps and entrances create a risk of slipping or falling.

Keep steps, entrances and footwear free from dirt (e.g. mud, clay, snow and ice).

Engine cleaning

! CAUTION

Do not allow water to enter the intake and ventilation openings.

When cleaning with high-pressure water or steam cleaners, the spray must not be aimed directly at electrical components or at the end of electrical lines.

Treat the engine with preservative agents after cleaning. Protect the belt drive system from the preservative when you do so.

Light-alloy wheels*

Clean light-alloy wheels on a regular basis.

! CAUTION

Do not use any acidic or alkaline cleaning agents. They can cause corrosion of the wheel bolts (wheel nuts) or the balancing weight retainers.

Outside of windshield and wiper blades

- ▶ Turn key to position **1** in ignition lock (▷ page 67).
- ▶ Switch on windshield wipers (▷ page 126).
- ▶ When the wiper arms are vertical, turn key to position **0** in the ignition lock or remove the key.

! CAUTION

Do not fold the windshield wipers away from the windshield unless the hood is closed. You will otherwise damage the hood.

- ▶ Fold the wiper arms away from the windshield until you feel them engage in place.

Warning ⚠

Switch off the ignition before cleaning the windshield or the wiper blades. The windshield wipers could otherwise move and injure you.

- ▶ You can now clean the windshield and the wiper blades.
- ▶ Fold the windshield wipers back again before you switch on the ignition.

Windows

> ! CAUTION
> Do not use a dry cloth, abrasive material, solvent or solvent-based cleaning agent to clean the inside of the windows. Clean the inside of the windows with a damp cloth or a commercially available glass cleaner. Do not touch the inside of the rear and side windows with hard objects, such as an ice scraper or a ring. You could otherwise damage the windows or the rear window heating.

Headlamps

▶ Wipe the headlamp lenses with a damp sponge.

> ! CAUTION
> Only use washer fluid which is suitable for plastic lamp lenses.

> Unsuitable washer fluid may damage the plastic headlamp lenses.
>
> For this reason, do not use a dry cloth, abrasive material, solvent or solvent-based cleaning agent. You could otherwise scratch or damage the lens surface.

Parktronic sensors*

The sensors are located in the front and rear bumpers.

① Parktronic sensors

▶ Clean the sensors in the bumpers using water, shampoo and a soft cloth.

! Do not use dry, coarse or hard cloths and do not scrub. You will otherwise scratch or damage the sensors.
If you clean the sensors with a high-pressure cleaner or steam cleaner, observe the information provided by the manufacturer regarding the distance to be maintained between the vehicle and the nozzle of the high-pressure cleaner.

Rear view camera lens*

The rear view camera is located in the center of the roof above the third brake lamp.

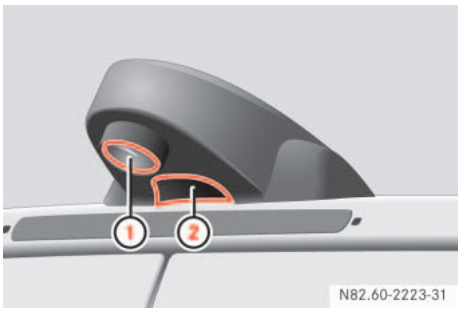

Rear view camera

① Camera lens
② Microphone openings

▶ Clean the camera lens ① using water and a soft cloth only.

Be careful not to apply wax to the camera lens ① when waxing the vehicle. If necessary, remove the wax using shampoo with plenty of water.

! Do not use dry, coarse or hard cloths and aggressive cleaning agents. Do not scrub or use high pressure. You will otherwise scratch or damage the lens or the camera.
If you clean the vehicle with a high-pressure cleaner or steam cleaner, maintain a minimum distance of 1.6 ft (50 cm) to the rear view camera. To prevent damage, do not aim directly at the rear view camera or at the microphone openings on the underside of the rear view camera.

Plastic trims

! CAUTION
Do not use dry, coarse or hard cloths and do not scrub. You will otherwise scratch or damage the surfaces.

Light soiling

▶ Wipe plastic parts with a damp, lint-free cloth (e.g. a micro-fiber cloth).

! CAUTION
Use a low-foaming grease solvent (e.g. washing-up liquid) diluted in water as a cleaning agent.

The surface color may temporarily change shade during cleaning. Simply wait for the surface to dry.

Heavy soiling

▶ Wipe plastic parts with a damp, lint-free cloth (e.g. a micro-fiber cloth).

! CAUTION
Use a solvent-free and non-caustic cleaning agent. The manufacturer recommends that you use a Mercedes-Benz product.

The surface color may temporarily change shade during cleaning. Simply wait for the surface to dry.

Dashboard and padded boss of the steering wheel

▶ Moisten a clean and lint-free cloth with water and clean the plastic parts and the dashboard.

▶ Use a mild soap solution for particularly stubborn dirt.

Warning ⚠

Do not use cleaners or cockpit care sprays containing solvents to clean the dashboard or the padded boss of the steering wheel. Cleaners containing solvents can make the surface porous, which could lead to serious injuries if plastic parts were to come loose when an airbag is triggered.

Seat belts

Remove stains or dirt immediately to prevent damage or the build-up of residues.

! CAUTION

Clean the seat belts with a mild washing solution. Do not dry the seat belts in direct sunlight or at temperatures above 176 °F (80 °C).

Do not bleach or dye the seat belts. This could impair the function of the seat belts.

After driving off-road or on construction sites

Warning

Dirt on the vehicle can affect road and operating safety.

In particular, the following dangers can arise:

Stone chippings

Stones trapped between the tires can be thrown out while the vehicle is in motion and injure other road users or damage their vehicles (in particular the windshield).

Risk of skidding

Dirt and mud on the tires / road surface reduce wheel grip. This is especially so if the road surface is wet. The vehicle could then start to skid.

Risk of slipping

Dirt and mud on the steps and entrances make the steps less safe. As a result you could slip from the steps and injure yourself.

For this reason, always clean your vehicle carefully after driving off-road and on construction sites before using public roads.

If you use a high-pressure cleaner or automatic car wash for this purpose, you must follow the relevant safety instructions in this section.

▶ Clean the vehicle, particularly the lighting equipment, windows, exterior mirrors, steps, entrances, grab handles, wheels, tires, wheel housings and license plates. Observe the notes in this section.

▶ Remove any trapped foreign objects, e.g. stones.

Warning

Dirty brake discs and brake pads / linings can impair braking power (to the point of total failure).

You could thereby cause an accident.

Check the brake system for operating safety by testing the brakes before driving the vehicle onto public roads.

If braking power is impaired, stop the vehicle as soon as it is safe to do so and consult an authorized Sprinter Dealer which has the necessary specialist knowledge and tools to carry out the work required.

The manufacturer recommends that you use an authorized Sprinter Dealer for this purpose. In particular, work relevant to safety or on safety-related systems must be carried out at an authorized Sprinter Dealer.

After driving in mud, sand, water or similar conditions:

- Check the brake system for operating safety.
- Clean the wheels, chassis and brake system.
- Check them for damage and have any damage repaired by an authorized Sprinter Dealer if necessary.

What to do if 250
Display messages 281
Where will I find...? 299
Changing bulbs 306
Changing the batteries 315
Fuel system 317
Replacing the wiper blades 319
Flat tire 320
Battery 335
Jump-starting 340
Towing 342
Fuses 345

Audible warning signals

Warning ⚠

Always have maintenance work carried out at an authorized Sprinter Dealer which has the necessary specialist knowledge and tools to carry out the work required.

The manufacturer recommends that you use an authorized Sprinter Dealer for this purpose.

In particular, work relevant to safety or on safety-related systems must be carried out at an authorized Sprinter Dealer. There is a risk of an accident and injury if this work is carried out incorrectly.

Problem	Possible cause / result	Suggested solutions
The anti-theft alarm system is suddenly triggered.	You have opened the vehicle using the key while the anti-theft alarm system was still primed.	Key: ▶ Press the 🔓 button. or ▶ Insert the key into the ignition lock. The anti-theft alarm system is deactivated.
You hear a warning signal.	A message appears in the display.	▶ Observe the instructions on (▷ page 281).
	You are driving with the handbrake applied.	▶ Release the handbrake (▷ page 115).
	You opened the driver's door and forgot to switch off the lights.	▶ Turn the light switch to **0**.
	Warning ⚠ You are not wearing your seat belt.	▶ Fasten your seat belt (▷ page 25).

Accident

Warning ⚠

Always have maintenance work carried out at an authorized Sprinter Dealer which has the necessary specialist knowledge and tools to carry out the work required.

The manufacturer recommends that you use an authorized Sprinter Dealer for this purpose.

In particular, work relevant to safety or on safety-related systems must be carried out at an authorized Sprinter Dealer. There is a risk of an accident and injury if this work is carried out incorrectly.

Problem	Possible cause / result	Suggested solutions
Fuel is leaking from the vehicle.	**Risk of fire and explosion** ⚠ The fuel line or fuel tank is malfunctioning. There is a risk of fire and explosion from leaking fuel.	▶ Switch off the ignition immediately. ▶ Remove the key. ▶ Do not restart the engine under any circumstances. ▶ Consult an authorized Sprinter Dealer.
You are unable to determine the extent of the damage.		▶ Consult an authorized Sprinter Dealer.
You are unable to determine any damage to: • the major components • the fuel system • the engine support		▶ Start the engine as usual.

Fuel and fuel tank

Warning

Always have maintenance work carried out at an authorized Sprinter Dealer which has the necessary specialist knowledge and tools to carry out the work required.

The manufacturer recommends that you use an authorized Sprinter Dealer for this purpose.

In particular, work relevant to safety or on safety-related systems must be carried out at an authorized Sprinter Dealer. There is a risk of an accident and injury if this work is carried out incorrectly.

Problem	Possible cause / result	Suggested solutions
The fuel tank has been run dry and the vehicle has a diesel engine.	There is air in the fuel system.	▶ Bleed the fuel system (▷ page 318).
Fuel is leaking from the vehicle.	**Risk of fire and explosion** The fuel line or fuel tank is malfunctioning. There is a risk of fire and explosion from leaking fuel.	▶ Switch off the ignition immediately. ▶ Remove the key. ▶ Do not restart the engine under any circumstances. ▶ Consult an authorized Sprinter Dealer.

Engine

Warning ⚠

Always have maintenance work carried out at an authorized Sprinter Dealer which has the necessary specialist knowledge and tools to carry out the work required.

The manufacturer recommends that you use an authorized Sprinter Dealer for this purpose.

In particular, work relevant to safety or on safety-related systems must be carried out at an authorized Sprinter Dealer. There is a risk of an accident and injury if this work is carried out incorrectly.

Problem	Possible cause / result	Suggested solutions
The engine does not start. You can hear the starter motor working.	There may be a malfunction in the fuel supply.	▶ Turn the key back to position **0** in the ignition lock before the next starting attempt. ▶ Start the engine again. Note that excessively long attempts to start the engine may drain the battery. If the engine still will not start after several starting attempts: ▶ Consult an authorized Sprinter Dealer.
Vehicles with a diesel engine: The engine does not start. You can hear the starter motor working. The reserve fuel warning lamp is lit and the fuel gauge is at **0**.	The fuel tank has been run dry.	▶ Refuel the vehicle. ▶ Bleed the fuel system (▷ page 318).

Problem	Possible cause / result	Suggested solutions
The engine does not start. You cannot hear the starter motor working.	The on-board voltage is too low (the battery has too little charge or is discharged). The selector lever is not in position **P** or **N**.	▶ The engine may be jump-started (▷ page 340). If the engine does not start despite jump-starting: ▶ Consult an authorized Sprinter Dealer.
	The battery isolating switch is disconnected.	▶ Switch on the electrical system (▷ page 197).
Vehicles with a gasoline engine: The engine is not running smoothly and it is misfiring.	The engine electronics or a mechanical component of the engine control has malfunctioned.	▶ Do not use too much throttle. ▶ Have the cause rectified immediately at an authorized Sprinter Dealer. Otherwise, unburned fuel may get into the catalytic converter and damage it.

Problem	Possible cause / result	Suggested solutions
The coolant temperature gauge is above 250 °F (+120 °C).	The coolant is too hot and the engine is not being sufficiently cooled.	▶ Park your vehicle in a safe location as quickly as possible and let the engine continue to run at idle speed for about 1 to 2 minutes before switching it off. This allows the coolant temperature to return to normal again. If the coolant temperature is still too high: ▶ Switch off the engine and let it as well as the coolant cool down. ▶ Check the coolant level and observe the warning notes as you do so (▷ page 191). ▶ Add coolant as necessary.

Automatic transmission

Warning

Always have maintenance work carried out at an authorized Sprinter Dealer which has the necessary specialist knowledge and tools to carry out the work required.

The manufacturer recommends that you use an authorized Sprinter Dealer for this purpose.

In particular, work relevant to safety or on safety-related systems must be carried out at an authorized Sprinter Dealer. There is a risk of an accident and injury if this work is carried out incorrectly.

Problem	Possible cause / result	Suggested solutions
The transmission no longer changes gear correctly.	The transmission is losing oil.	▶ Have the transmission checked immediately at an authorized Sprinter Dealer.
The acceleration ability is deteriorating. The transmission does not shift.	The transmission is in emergency mode. It is only possible to shift into second gear or reverse gear.	▶ Stop the vehicle. ▶ Move the selector lever to position **P**. ▶ Switch off the engine. ▶ Wait at least 10 seconds before restarting the engine. ▶ Move the selector lever to position **D** or **R**. ▶ In position **D**, the transmission shifts into second gear; in position **R**, the transmission shifts into the reverse gear. ▶ Have the transmission checked immediately at an authorized Sprinter Dealer.

Headlamps and turn signals

Warning

Always have maintenance work carried out at an authorized Sprinter Dealer which has the necessary specialist knowledge and tools to carry out the work required.

The manufacturer recommends that you use an authorized Sprinter Dealer for this purpose.

In particular, work relevant to safety or on safety-related systems must be carried out at an authorized Sprinter Dealer. There is a risk of an accident and injury if this work is carried out incorrectly.

Problem	Possible cause / result	Suggested solutions
The headlamps are fogged up on the inside.	Air humidity is very high.	▶ Drive with the lights on. The headlamps will defrost after the vehicle has been driven a short distance.
	Moisture has penetrated the headlamp housing since it is not water-tight.	▶ Have the headlamps checked at an authorized Sprinter Dealer.

Windshield wipers

Warning ⚠

Always have maintenance work carried out at an authorized Sprinter Dealer which has the necessary specialist knowledge and tools to carry out the work required.

The manufacturer recommends that you use an authorized Sprinter Dealer for this purpose.

In particular, work relevant to safety or on safety-related systems must be carried out at an authorized Sprinter Dealer. There is a risk of an accident and injury if this work is carried out incorrectly.

Problem	Possible cause / result	Suggested solutions
The windshield wipers are jammed.	Leaves or snow, for example, are hindering the movement of the windshield wipers. The wiper motor has switched off.	▶ Stop the vehicle as soon as possible and, for safety reasons, remove the key from the ignition lock. ▶ Remove the cause of the obstruction. ▶ Switch on the windshield wipers again.
The windshield wipers have stopped working completely.	The windshield wiper drive has malfunctioned.	▶ Select a different wiper speed on the combination switch. ▶ Have the windshield wipers checked at an authorized Sprinter Dealer.

Remote control

Warning ⚠

Always have maintenance work carried out at an authorized Sprinter Dealer which has the necessary specialist knowledge and tools to carry out the work required.

The manufacturer recommends that you use an authorized Sprinter Dealer for this purpose.

In particular, work relevant to safety or on safety-related systems must be carried out at an authorized Sprinter Dealer. There is a risk of an accident and injury if this work is carried out incorrectly.

Problem	Possible cause / result	Suggested solutions
It is no longer possible to lock the vehicle using the remote control.	The doors are not closed properly.	▶ Close the doors properly and lock the vehicle again.
The turn signals do not flash when the vehicle is locked.	The central locking system has malfunctioned.	▶ Lock the vehicle using the key (▷ page 54). ▶ Have the central locking system checked as soon as possible at an authorized Sprinter Dealer.

Problem	Possible cause / result	Suggested solutions
It is no longer possible to lock or unlock the vehicle using the remote control.	The remote control batteries are weak or discharged.	▶ Point the remote control towards the driver's door handle at close range and try again. If this does not work: ▶ Lock or unlock the vehicle using the key (▷ page 54). ▶ Check the batteries of the remote control (▷ page 53). Change the batteries if necessary (▷ page 315).
	The remote control is malfunctioning.	▶ Lock or unlock the vehicle using the key (▷ page 54). ▶ Have the remote control checked at an authorized Sprinter Dealer.
The battery check lamp on the remote control does not light up briefly when a button is pressed.	The remote control batteries are discharged.	▶ Change the batteries (▷ page 315).
You have lost a remote control.		▶ Have the remote control canceled at an authorized Sprinter Dealer. ▶ Report the loss immediately to the vehicle insurers. Your authorized Sprinter Dealer will be happy to obtain a replacement for you.

Problem	Possible cause / result	Suggested solutions
The key can no longer be turned in the ignition lock.	The on-board voltage is too low.	▶ Remove the key and re-insert it into the ignition lock. ▶ Switch off all non-essential consumers, for example the seat heating, interior lighting, and try to turn the key again. If this does not work: ▶ Check the starter battery and charge it if necessary. or ▶ The engine may be jump-started (▷ page 340). or ▶ Consult an authorized Sprinter Dealer.

Driving systems

Warning ⚠

Always have maintenance work carried out at an authorized Sprinter Dealer which has the necessary specialist knowledge and tools to carry out the work required.

The manufacturer recommends that you use an authorized Sprinter Dealer for this purpose.

In particular, work relevant to safety or on safety-related systems must be carried out at an authorized Sprinter Dealer. There is a risk of an accident and injury if this work is carried out incorrectly.

Problem	Possible cause / result	Suggested solutions
Only the red segments in the Parktronic* warning displays are lit. A warning tone also sounds for approximately 2 seconds. Parktronic* switches off after approximately 20 seconds. The indicator lamp on the Parktronic switch comes on and the red segments in the warning display go out.	Parktronic* has malfunctioned and has switched off. When you press the Parktronic switch, the red segments in the Parktronic warning displays light up again and the warning tone sounds for approximately 2 seconds.	▶ Have Parktronic* checked as soon as possible at an authorized Sprinter Dealer.
The Parktronic* warning displays indicate implausible distances. For example, all the segments may be lit even though there is no obstacle present.	The Parktronic* sensors are dirty or iced up.	▶ Clean the Parktronic* sensors (▷ page 244). ▶ Switch on the ignition again.
	An external radio or ultrasonic source may be causing interference.	▶ Check whether Parktronic* works at another location.
	The license plate or other attachment parts near the sensors may not be secured correctly.	▶ Check the number plate and attachment parts near the sensors to see if they are securely in place.

Problem	Possible cause / result	Suggested solutions
The speed cannot be set with cruise control* activated[1].	The display is showing a message of high priority and cannot therefore show a change in speed.	▶ Proceed as instructed by the message in the display. ▶ Deactivate cruise control* if necessary.

1 Only on vehicles with steering wheel buttons.

Auxiliary heating*

Warning ⚠

Always have maintenance work carried out at an authorized Sprinter Dealer which has the necessary specialist knowledge and tools to carry out the work required.

The manufacturer recommends that you use an authorized Sprinter Dealer for this purpose. In particular, work relevant to safety or on safety-related systems must be carried out at an authorized Sprinter Dealer. If this work is carried out incorrectly, the operating safety of the heater can no longer be guaranteed and there is a risk of accident and injury.

Problem	Possible cause / result	Suggested solutions
The battery check lamp on the remote control for the auxiliary heating does not light up briefly when a button is pressed.	The remote control batteries are discharged.	▶ Change the remote control batteries (▷ page 316).
The auxiliary heating does not switch on or the engine does not start.	Lack of fuel. The fuel tank is less than a quarter full. The auxiliary heating switches off automatically.	▶ Refuel at the nearest refueling station. ▶ Then start the auxiliary heating repeatedly until the fuel lines are full.
	The undervoltage protection circuit integrated in the control unit switches off the auxiliary heating because the on-board voltage is less than 10 V.	▶ If necessary, have the alternator and the battery checked.
	The fuse has blown.	▶ Replace the fuse (▷ page 345). ▶ Have the cause of the blown fuse checked at an authorized Sprinter Dealer.

Problem	Possible cause / result	Suggested solutions
The auxiliary heating does not switch on or the engine does not start	**WARNING** ⚠ The auxiliary heating has overheated about ten times in succession. The engine or heater is malfunctioning.	▶ Have the auxiliary heating checked at an authorized Sprinter Dealer.
The heater has overheated.	The coolant level is too low.	▶ Check the coolant level and add coolant if necessary (▷ page 191).

Leaving the vehicle in storage

Warning ⚠

Always have maintenance work carried out at an authorized Sprinter Dealer which has the necessary specialist knowledge and tools to carry out the work required.

The manufacturer recommends that you use an authorized Sprinter Dealer for this purpose.

In particular, work relevant to safety or on safety-related systems must be carried out at an authorized Sprinter Dealer. There is a risk of an accident and injury if this work is carried out incorrectly.

Problem	Possible cause / result	Suggested solutions
You wish to leave your vehicle in storage for a long period of time (longer than six weeks).		▶ Obtain advice from an authorized Sprinter Dealer. ▶ Disconnect the starter battery (▷ page 335).

Indicator and warning lamps in switches

Warning

Always have maintenance work carried out at an authorized Sprinter Dealer which has the necessary specialist knowledge and tools to carry out the work required.

The manufacturer recommends that you use an authorized Sprinter Dealer for this purpose.

In particular, work relevant to safety or on safety-related systems must be carried out at an authorized Sprinter Dealer. There is a risk of an accident and injury if this work is carried out incorrectly.

Problem	Possible cause / result	Suggested solutions
One or both of the indicator lamps in the switch for the seat heating * are flashing.	There is insufficient voltage available as too many consumers are switched on. The seat heating has been switched off automatically.	▶ Switch off all non-essential consumers, for example the reading lamps, interior lighting, etc. The seat heating will switch back on automatically as soon as there is sufficient voltage again.
The indicator lamps in the switches for the windshield heating * and/or rear window heating * are flashing.	There is insufficient voltage available as too many consumers are switched on. The windshield heating and / or rear window heating have switched off automatically.	▶ Switch off all non-essential consumers, for example the reading lamps, interior lighting, etc. If sufficient voltage is available again within 30 seconds, the windshield heating and / or rear window heating switch on again automatically, they remain switched off.

Problem	Possible cause / result	Suggested solutions
The residual engine heat utilization function switches off too soon or cannot be switched on. The indicator lamp in the AC OFF REST switch does not light up.	There is insufficient voltage available as too many consumers are switched on.	▶ Switch off all non-essential consumers, for example the reading lamps, interior lighting, etc. The residual engine heat utilization function will switch back on automatically as soon as there is sufficient voltage again.

Indicator and warning lamps in the instrument cluster

Warning

Always have maintenance work carried out at an authorized Sprinter Dealer which has the necessary specialist knowledge and tools to carry out the work required.

The manufacturer recommends that you use an authorized Sprinter Dealer for this purpose.

In particular, work relevant to safety or on safety-related systems must be carried out at an authorized Sprinter Dealer. There is a risk of an accident and injury if this work is carried out incorrectly.

Problem		Possible cause / result	Suggested solutions
	The yellow ASR/ESP® warning lamp flashes while the vehicle is in motion.	**WARNING** ESP® or ASR is intervening because at least one of the wheels has reached its tire grip limit.	▶ Adapt your driving style to suit the road and traffic conditions. Do not use too much throttle. ▶ Drive slowly.
	The yellow ASR / ESP® warning lamp is lit while the engine is running.	**WARNING** ASR is deactivated.	▶ Reactivate ASR. Exceptions (▷ page 45).
ESP ABS BRAKE	The yellow ESP®, ABS-, ASR/BAS indicator lamps and the red brake system indicator lamp are lit while the engine is running.	**WARNING** EBV has malfunctioned. The rear wheels could lock up sooner than expected when you apply the brakes.	▶ Also observe the messages in the display on vehicles with steering wheel buttons (▷ page 284). ▶ Continue driving, but with even greater care. ▶ Have the system checked at an authorized Sprinter Dealer as soon as possible.

Problem	Possible cause / result	Suggested solutions
ESP ABS BRAKE The yellow ESP®, ABS, ASR/BAS indicator lamps and the red brake system indicator lamp are lit while the engine is running.	**WARNING** ⚠ EBV has been deactivated due to undervoltage. The battery may not be being charged. The rear wheels could lock up sooner than expected when you apply the brakes.	▶ Also observe the messages in the display on vehicles with steering wheel buttons (▷ page 284). ▶ Stop your vehicle as soon as it is safe to do so. ▶ Do not drive any further. ▶ Consult an authorized Sprinter Dealer.
BRAKE The red brake system indicator lamp is lit while the engine is running. A signal also sounds.	**WARNING** ⚠ There is insufficient brake fluid in the fluid reservoir.	▶ Also observe the messages in the display on vehicles with steering wheel buttons (▷ page 284). ▶ Do not add brake fluid under any circumstances. This will not solve the problem. ▶ Do not drive any further. ▶ Consult an authorized Sprinter Dealer.
BRAKE When towing a trailer: The red brake system indicator lamp is lit while the engine is running. A signal also sounds.	**WARNING** ⚠ The trailer's brake booster is malfunctioning. The vehicle's driving and braking characteristics may change. There is a risk of the trailer overbraking.	▶ Also observe the messages in the display on vehicles with steering wheel buttons (▷ page 284). ▶ Stop your vehicle as soon as it is safe to do so. ▶ Do not drive any further. ▶ Consult an authorized Sprinter Dealer.

Problem	Possible cause / result	Suggested solutions
The yellow ASR / BAS indicator lamp is lit while the engine is running.	**WARNING** ⚠ ASR has been deactivated due to a malfunction. The engine power output may then be lower.	▶ Continue driving, but with even greater care. ▶ Have the system checked at an authorized Sprinter Dealer as soon as possible.
	WARNING ⚠ BAS has been deactivated due to a malfunction. The brake system continues to function with the normal braking effect but with no electronic support.	▶ Continue driving, but with even greater care. ▶ Have the system checked at an authorized Sprinter Dealer as soon as possible.
	ASR and BAS have been switched off due to undervoltage. The battery may not be being charged. The brake system is still available with the normal braking effect.	▶ Continue driving, but with even greater care. ▶ Have the system checked at an authorized Sprinter Dealer as soon as possible.

Problem	Possible cause / result	Suggested solutions
The yellow ABS indicator lamp is lit while the engine is running.	**WARNING** ABS has been deactivated due to a malfunction. ESP®, ASR and BAS as well as cruise control have also been deactivated as a result. The brake system continues to function with the normal braking effect but with no electronic support. The wheels could therefore lock up, for example if the brakes are applied with maximum force.	▶ Also observe the messages in the display on vehicles with steering wheel buttons (▷ page 284). ▶ Continue driving, but with even greater care. ▶ Have the system checked at an authorized Sprinter Dealer as soon as possible.
	WARNING ABS is temporarily unavailable. Self diagnosis may not have been completed yet. The brake system is still available with the normal braking effect.	▶ Drive on for a distance of more than 13 mph (20 km / h). ABS is available again if the message goes out.
	ABS has been deactivated due to undervoltage. The battery may not be being charged. The brake system continues to function with the normal braking effect but with no electronic support. The wheels could therefore lock up, for example if the brakes are applied with maximum force.	▶ Continue driving, but with even greater care. ▶ Have the system checked at an authorized Sprinter Dealer as soon as possible.

Problem		Possible cause / result	Suggested solutions
ESP	The yellow ESP® indicator lamp is lit while the engine is running.	**WARNING** ⚠ ESP® has been deactivated due to a malfunction. Cruise control is also switched off as a result. Vehicle stability is no longer automatically controlled in good time. Engine power output may be reduced.	▶ Also observe the messages in the display on vehicles with steering wheel buttons (▷ page 284). ▶ Continue driving, but with even greater care. ▶ Have the system checked at an authorized Sprinter Dealer as soon as possible.
		ESP® has been deactivated due to undervoltage. The battery may not be being charged. Vehicle stability is no longer automatically controlled in good time. Engine power output may be reduced.	▶ Continue driving, but with even greater care. ▶ Have the system checked at an authorized Sprinter Dealer as soon as possible.
SRS	The red SRS warning lamp does not go out after approximately 4 seconds after the ignition system is switched on or lights up again.	**WARNING** ⚠ The restraint systems have malfunctioned. The airbags or emergency tensioning retractors could be triggered unintentionally, or not at all in the event of an accident.	▶ Drive on with even greater care to an authorized Sprinter Dealer.

Problem	Possible cause / result	Suggested solutions
The red battery charge warning lamp lights up while the engine is running.	**WARNING** The battery is not being charged. Possible causes: • malfunctioning alternator • torn poly-V-belt	▶ Stop immediately and check the poly-V-belt. If it is torn: ▶ Do not drive any further. Consult the nearest authorized Sprinter Dealer. If it is not damaged: ▶ Have your vehicle checked at an authorized Sprinter Dealer.
	The battery is malfunctioning.	▶ Stop your vehicle as soon as it is safe to do so. ▶ Do not drive any further. ▶ Contact a breakdown service, an authorized Sprinter Dealer.
The yellow brake pad wear indicator lamp lights up after the engine is started or while the vehicle is in motion.	**WARNING** The brake pads / linings have reached their wear limit.	▶ Have the brake pads / linings replaced as soon as possible at an authorized Sprinter Dealer.

Problem	Possible cause / result	Suggested solutions
The yellow engine oil level warning lamp flashes after the engine is started or while the vehicle is in motion.	The engine oil level has dropped to the minimum level. If the engine oil level falls any further, the indicator lamp will light up continuously.	▶ Check the engine oil level and add engine oil at the nearest refueling station (▷ page 190). ▶ If there is visible oil loss from the engine, have the fault rectified immediately at an authorized Sprinter Dealer.
The yellow engine oil level warning lamp lights up, the -2.0 l engine oil level message appears in the display and the warning buzzer sounds after the engine is started or while the vehicle is in motion.	There is insufficient or no oil in the engine. There is a risk of engine damage.	▶ Stop your vehicle as soon as it is safe to do so. ▶ Switch off the engine. ▶ Check the engine oil level using the dipstick (▷ page 190). ▶ If the oil level is correct, have the malfunction rectified immediately at an authorized Sprinter Dealer. ▶ If there is insufficient or no oil in the engine, have the vehicle towed to an authorized Sprinter Dealer.

Problem	Possible cause / result	Suggested solutions
The yellow engine oil level warning lamp lights up, the HI engine oil level message appears in the display and the warning buzzer sounds after the engine is started or while the vehicle is in motion.	The engine oil level has exceeded the maximum level.	▶ Check the engine oil level and have any excess oil siphoned off at the nearest refueling station (▷ page 190). The engine or the catalytic converter could be damaged. ▶ If the oil level is correct, have the malfunction rectified as soon as possible at an authorized Sprinter Dealer.
The yellow engine oil level warning lamp lights up repeatedly while the vehicle is in motion.	The engine oil level indicator is malfunctioning.	▶ Have the vehicle checked immediately at an authorized Sprinter Dealer.
The yellow coolant level warning lamp lights up while the engine is running.	The coolant level is too low. Never run the engine if the coolant level is too low. The engine could overheat and be damaged.	▶ Stop at the earliest opportunity. ▶ Switch off the engine to cool down. ▶ Check the coolant level and add coolant as necessary (▷ page 191). ▶ If you are having to add coolant frequently, have the cooling system checked at an authorized Sprinter Dealer.

Problem	Possible cause / result	Suggested solutions
The red coolant warning lamp lights up while the engine is running.	The coolant temperature is too high.	▶ Do not drive any further. ▶ Consult an authorized Sprinter Dealer. If the vehicle is switched off after being subjected to extreme loads (for example driving in mountainous terrain, trailer towing, etc.), the coolant warning lamp may light up when the ignition is switched on or the engine is restarted. Run the engine for approximately 1 minute at idling speed. Consult an authorized Sprinter Dealer if the coolant warning lamp remains lit.
The yellow reserve fuel warning lamp lights up while the vehicle is in motion.	The fuel level has fallen into the reserve range.	▶ Refuel at the nearest refueling station (▷ page 184).
The yellow reserve fuel warning lamp lights up while the engine is running and the gauge for the fuel tank shows zero although there is still fuel in the tank.	The fuel filler cap is not closed.	▶ Close the fuel filler cap. A clicking sound indicates that the fuel filler cap is closed. ▶ If the malfunction continues to be indicated, have it rectified immediately at an authorized Sprinter Dealer.
The yellow preglow indicator lamp lights up while the engine is running.	There is a malfunction in the preglow system.	▶ Consult an authorized Sprinter Dealer.

Problem	Possible cause / result	Suggested solutions
The yellow engine diagnostic indicator lamp lights up or flashes while the engine is running.	The fuel tank has run dry. The engine may be running in emergency mode.	▶ Refuel at the nearest refueling station. ▶ On vehicles with a diesel engine: Bleed the fuel system (▷ page 318). ▶ Start the engine three to four times after refueling. Emergency mode will be canceled. You do not need to have your vehicle checked.
	There is a malfunction: • in the fuel injection system • in the ignition system[1] • in the exhaust system. The emission limit values may be exceeded and the engine may be running in emergency mode. Engine power output may be reduced.	▶ Have the vehicle checked immediately at an authorized Sprinter Dealer.

1 Only vehicles with a gasoline engine.

Problem	Possible cause / result	Suggested solutions
USA only: Combination low tire pressure/ TPMS malfunction telltale for TPMS lights up continuously. Canada only: Low tire pressure telltale for TPMS lights up continuously.	**WARNING** The TPMS detects a loss of pressure in at least one tire.	▶ Carefully bring the vehicle to a halt, avoiding abrupt steering and braking maneuvers. Observe the traffic situation around you. ▶ Read and observe messages in the multifunction display. If the tire inflation pressure in the respective tire(s) has (have) been corrected, the combination low tire pressure/TPMS malfunction telltale goes out after a few minutes of driving.
USA only: Combination low tire pressure/ TPMS malfunction telltale for TPMS flashes 60 seconds and then stays illuminated.	There is a malfunction in the TPMS.	▶ Read and observe messages in the multifunction display. ▶ Have the TPMS checked at an authorized Sprinter Dealer as soon as possible. After the malfunction has been remedied, the combination low tire pressure/TPMS malfunction telltale goes out after a few minutes of driving.

Warning!

Each tire, including the spare (if provided), should be checked monthly when cold and inflated to the inflation pressure recommended by the vehicle manufacturer on the vehicle placard or the tire inflation pressure label. (If your vehicle has tires of a different size than the size indicated on the vehicle placard or the tire inflation pressure label, you should determine the proper tire inflation pressure for those tires).

As an added safety feature, your vehicle has been equipped with a Tire Pressure Monitoring System (TPMS) that illuminates a low tire pressure telltale when one or more of your tires is significantly underinflated. Accordingly, when the low tire pressure telltale illuminates, you should stop and check your tires as soon as possible, and inflate them to the proper pressure. Driving on a significantly underinflated tire causes the tire to overheat and can lead to tire failure.

Underinflation also reduces fuel efficiency and tire tread life, and may affect the vehicle's handling and stopping ability. Please note that the TPMS is not a substitute for proper tire maintenance, and it is the driver's responsibility to maintain correct tire pressure, even if underinflation has not reached the level to trigger illumination of the TPMS low tire pressure telltale.

USA only:

Your vehicle has also been equipped with a TPMS malfunction indicator to indicate when the system is not operating properly. The TPMS malfunction indicator is combined with the low tire pressure telltale. When the system detects a malfunction, the telltale will flash for approximately 1 minute and then remain continuously illuminated. This sequence will continue upon subsequent vehicle start-ups as long as the malfunction exists. When the malfunction indicator is illuminated, the system may not be able to detect or signal low tire pressure as intended.

TPMS malfunctions may occur for a variety of reasons, including the installation of incompatible replacement or alternate tires or wheels on the vehicle that prevent the TPMS from functioning properly. Always check the TPMS malfunction telltale after replacing one or more tires or wheels on your vehicle to ensure that the replacement or alternate tires and wheels allow the TPMS to continue to function properly.

Problem	Possible cause / result	Suggested solutions
The yellow water separator indicator lamp[1] lights up while the ignition is on.	The water that has collected in the water separator has reached the maximum level.	▶ Drain the water separator (▷ page 317). ▶ Have the water separator drained at an authorized Sprinter Dealer.
The yellow washer fluid level indicator lamp for the windshield washer / headlamp cleaning system lights up after the engine is started or while the vehicle is in motion.	The windshield washer fluid level is too low.	▶ Check the fluid level in the reservoir and add windshield washer fluid if necessary (▷ page 193).
The red seat belt telltale lights up for approximately 6 seconds when the ignition is switched on. A signal also sounds.	The telltale reminds you to fasten your seat belt.	▶ Fasten your seat belt.
The yellow bulb indicator lamp lights up while the ignition is on.	One of the bulbs of the exterior lighting or on the trailer is malfunctioning.	▶ Have the malfunction rectified as soon as possible at an authorized Sprinter Dealer.
The yellow “door open” indicator lamp lights up while the vehicle is in motion.	You are already driving at walking pace, even though not all the doors or the hood are closed.	▶ Close the doors or the hood.

1 Only vehicles with a diesel engine.

All warning / indicator lamps (except the turn signal indicator lamps) and the display are activated when the ignition is switched on.
Please check that they are working properly before commencing a journey.

Display messages on vehicles without steering wheel buttons

Warnings, malfunctions or additional information may also be shown in the display. The following table shows messages which could appear in the display.

Certain messages are accompanied by a warning signal or a permanent tone.

Warning

No messages can be displayed if there is a failure of the instrument cluster and / or the display. You will not then be able to see information about the vehicle status, such as speed and outside temperature, warning and indicator lamps, malfunction and warning messages or the failure of systems. Handling characteristics may be affected.

Contact an authorized Sprinter Dealer immediately which has the necessary specialist knowledge and tools to carry out the work required.

The manufacturer recommends that you use an authorized Sprinter Dealer for this purpose. In particular, work relevant to safety or on safety-related systems must be carried out at an authorized Sprinter Dealer.

Warning

Always have maintenance work carried out at an authorized Sprinter Dealer which has the necessary specialist knowledge and tools to carry out the work required.

The manufacturer recommends that you use an authorized Sprinter Dealer for this purpose. In particular, work relevant to safety or on safety-related systems must be carried out at an authorized Sprinter Dealer. There is a risk of an accident and injury if this work is carried out incorrectly.

Display messages	Possible cause / result	Possible solution
	There is insufficient or no oil in the engine. There is a risk of engine damage.	▶ Stop your vehicle as soon as it is safe to do so. ▶ Switch off the engine. ▶ Check the engine oil level using the dipstick (▷ page 189). ▶ If the oil level is correct, have the malfunction rectified immediately at an authorized Sprinter Dealer. ▶ If there is insufficient or no oil in the engine, have the vehicle towed to an authorized Sprinter Dealer.
NO The message is displayed for 30 seconds. TPMS The message is also displayed after 30 seconds.	The TPMS is malfunctioning.	▶ Have the TPMS checked at an authorized Sprinter Dealer as soon as possible.
	The tire pressure monitor is not receiving signals from one or more wheels because: • a wheel was replaced with the spare wheel, which is not equipped with a wheel electronics unit • the maximum temperature in one of the wheel electronics units has been exceeded • one of the wheel electronics units is malfunctioning	▶ Have wheels with wheel electronics units mounted at an authorized Sprinter Dealer.

Display messages	Possible cause / result	Possible solution
– – The message is displayed for 30 seconds. TPMS The message is also displayed after 30 seconds.	The tire pressure monitor detects a moderate loss of pressure in at least one of the tires, or the difference in pressure on one axle is too great.	▶ Check the tire pressure at the earliest opportunity and correct it if necessary.

Display messages on vehicles with steering wheel buttons

The operating system shows warnings, malfunctions or additional information in the display.

Certain messages are accompanied by a warning signal or a permanent tone.

High-priority messages are highlighted in red in the display.

Please respond in accordance with the messages and follow the additional notes in these Operating instructions.

- Low-priority messages can be acknowledged using the , , or buttons on the steering wheel or using the reset button on the instrument cluster (▷ page 84). They are then stored in the malfunction memory.
- Highest-priority messages cannot be acknowledged and are automatically stored in the malfunction memory.

If you select the Malfunction memory menu in the operating system (▷ page 95), the acknowledged and unacknowledged messages will appear.

Warning

No messages can be displayed if there is a failure of the instrument cluster and / or the display. You will not then be able to see information about the vehicle status, such as speed and outside temperature, warning and indicator lamps, malfunction and warning messages or the failure of systems. Handling characteristics may be affected.

Contact an authorized Sprinter Dealer immediately which has the necessary specialist knowledge and tools to carry out the work required.

The manufacturer recommends that you use an authorized Sprinter Dealer for this purpose. In particular, work relevant to safety or on safety-related systems must be carried out at an authorized Sprinter Dealer.

Warning

Always have maintenance work carried out at an authorized Sprinter Dealer which has the necessary specialist knowledge and tools to carry out the work required.

The manufacturer recommends that you use an authorized Sprinter Dealer for this purpose. In particular, work relevant to safety or on safety-related systems must be carried out at an authorized Sprinter Dealer. There is a risk of an accident and injury if this work is carried out incorrectly.

The following table shows messages which could appear in the display. The messages are divided into two types to make it easier for you to find the relevant message:

- Text messages are shown in alphabetical order from (▷ page 285) onwards
- Symbol messages (▷ page 289)

Text messages

Display messages		Possible cause / result	Possible solution
ABS	Visit workshop	**WARNING** ⚠ ABS has been deactivated due to a malfunction. ESP®, ASR and BAS as well as cruise control have also been deactivated as a result. The brake system is still available with the full brake boosting effect but without ABS.	▶ Continue driving, but with even greater care. ▶ Have the system checked at an authorized Sprinter Dealer as soon as possible.
	unavailable	**WARNING** ⚠ ABS is temporarily unavailable. Self diagnosis may not have been completed yet. The brake system is still available with the normal braking effect.	▶ Drive on for a distance of more than 13 mph (20 km / h). ABS is available again if the message goes out.
		ABS has been deactivated due to undervoltage. The battery may not be being charged. The brake system is still available with the normal braking effect.	▶ Continue driving, but with even greater care. ▶ Visit an authorized Sprinter Dealer immediately.

Display messages		Possible cause / result	Possible solution
ESP	Visit workshop	**WARNING** ⚠ ESP® has been deactivated due to a malfunction. Cruise control is also switched off as a result. Vehicle stability is no longer automatically controlled in good time. Engine power output may be reduced.	▶ Continue driving, but with even greater care. ▶ Have the system checked at an authorized Sprinter Dealer as soon as possible.
	unavailable	ESP® has been deactivated due to undervoltage. Cruise control is also switched off as a result. The battery may not be being charged. Vehicle stability is no longer automatically controlled in good time. Engine power output may be reduced.	▶ Continue driving, but with even greater care. ▶ Have the system checked at an authorized Sprinter Dealer as soon as possible.
	Tire pres. Adjust pres.	The pressure is too low in one or more tires.	▶ Check and correct tire inflation pressure as required.
	Tire pres. monitor inoperative	The TPMS is malfunctioning.	▶ Have the TPMS checked at an authorized Sprinter Dealer.
	Tire pres. displayed after driving several minutes	The tire inflation pressure is being checked.	▶ Drive the vehicle for a few minutes.

Display messages		Possible cause / result	Possible solution
	Tire pres. monitor currently unavailable	The TPMS or Advanced TPMS* is unable to monitor the tire pressure due to • a nearby radio interference source. • excessive wheel sensor temperatures.	▶ As soon as the causes of the malfunction have been removed, the TPMS automatically becomes active again after a few minutes of driving.
	Tire pres. monitor inoperative No wheel sensors	There are wheels without appropriate wheel sensors mounted (for example winter tires).	▶ Have the TPMS checked at an authorized Sprinter Dealer. ▶ Have the wheel sensors installed by an authorized Sprinter Dealer.
	Wheel sens. missing	One ore more sensors are malfunctioning (for example battery discharged). One or more wheels without appropriate wheel sensors mounted (for example spare tire)	▶ Have the TPMS checked by an authorized Sprinter Dealer. ▶ Have the wheel sensors installed by an authorized Sprinter Dealer. The tire pressure for the respective tire is shown in the multifunction display.
	Slid. sunroof open	You have the removed the key from the ignition lock and the sliding sunroof is still open.	▶ If necessary, close the sliding sunroof using the switch in the overhead control panel (▷ page 145).
	Cruise cont. Visit workshop	Cruise control is malfunctioning.	▶ Have cruise control checked at an authorized Sprinter Dealer.

Display messages		Possible cause / result	Possible solution
SRS	Restraint system Visit workshop	**WARNING** ⚠ The restraint systems have malfunctioned. The airbags or emergency tensioning retractors could be triggered unintentionally, or not at all in the event of an accident.	▶ Continue driving, but with even greater care. ▶ Visit an authorized Sprinter Dealer as soon as possible.

Symbol messages

Display symbol	Display message	Possible cause / result	Possible solution
	Battery/ Alternator Visit workshop	The battery is not being charged. Possible causes: • malfunctioning alternator • torn poly-V-belt	▶ Stop immediately and check the poly-V-belt. If it is torn: ▶ Do not drive any further. ▶ Consult an authorized Sprinter Dealer. If it is not damaged: ▶ Drive to the nearest authorized Sprinter Dealer immediately.
	Brake wear Visit workshop	**WARNING** The brake pads / linings have reached their wear limit.	▶ Have the brake pads / linings replaced as soon as possible at an authorized Sprinter Dealer.
BRAKE	Brake force distribution	**WARNING** EBV has been deactivated due to under-voltage. The battery may not be being charged. The rear wheels could lock up sooner than expected when you apply the brakes.	▶ Stop your vehicle as soon as it is safe to do so. ▶ Do not drive any further. ▶ Consult an authorized Sprinter Dealer.

Display symbol	Display message	Possible cause / result	Possible solution
(!) BRAKE	Brake fluid Visit workshop	**WARNING** ⚠ There is insufficient brake fluid in the fluid reservoir.	▶ Stop your vehicle as soon as it is safe to do so. ▶ Do not add brake fluid under any circumstances. This will not solve the problem. ▶ Do not drive any further. ▶ Consult an authorized Sprinter Dealer. .
(!) BRAKE	Brake force distribution Visit workshop	**WARNING** ⚠ EBV has malfunctioned. The rear wheels could lock up sooner than expected when you apply the brakes.	▶ Stop your vehicle as soon as it is safe to do so. ▶ Do not drive any further. ▶ Consult an authorized Sprinter Dealer.
(P) PARK	Parking brake Release brake A signal also sounds.	You are driving with the handbrake applied.	▶ Release the handbrake (▷ page 115).

Display symbol	Display message	Possible cause / result	Possible solution
	Visit workshop	**WARNING** ASR has been deactivated due to a malfunction. Cruise control is also switched off as a result. The engine power output may then be lower.	▶ Continue driving, but with even greater care. ▶ Have the system checked at an authorized Sprinter Dealer as soon as possible.
		WARNING BAS has been deactivated due to a malfunction. The brake system continues to function with the normal braking effect but with no electronic support.	▶ Continue driving, but with even greater care. ▶ Have the system checked at an authorized Sprinter Dealer as soon as possible.
	unavailable	ASR as well as BAS have been switched off due to undervoltage. The battery may not be being charged. The brake system is still available with the normal braking effect.	▶ Continue driving, but with even greater care. ▶ Have the system checked at an authorized Sprinter Dealer as soon as possible.
	Please enter PIN:	You have not yet entered your details in the telephone.	▶ Enter the PIN for your SIM card.
	Seatbelt sys. Visit workshop	**WARNING** The belt system has malfunctioned.	▶ Have the system checked at an authorized Sprinter Dealer as soon as possible.

Display symbol	Display message	Possible cause / result	Possible solution
	Coolant Stop, turn engine off	The coolant temperature is too high.	▶ Do not drive any further. ▶ Consult an authorized Sprinter Dealer. If the vehicle is switched off after being subjected to extreme loads (for example driving in mountainous terrain, trailer towing, etc.), this message may be displayed when the ignition is switched on or the engine is restarted. Run the engine for approximately 1 minute at idling speed. Consult an authorized Sprinter Dealer if the message remains displayed.
	Coolant Check level	The coolant level is too low. Never run the engine if the coolant level is too low. The engine could overheat and be damaged.	▶ Add coolant (▷ page 191). ▶ If you are having to add coolant frequently, have the cooling system checked at an authorized Sprinter Dealer.
	Low beam left	The left-hand low-beam headlamp is malfunctioning.	▶ Change the bulb as soon as possible.
	Low beam right	The right-hand low-beam headlamp is malfunctioning.	▶ Change the bulb as soon as possible.
	Turn signal left	The left-hand turn signal is malfunctioning.	▶ Change the bulb as soon as possible.
	Turn signal right	The right-hand turn signal is malfunctioning.	▶ Change the bulb as soon as possible.
	Brake lamp left	The left-hand brake lamp is malfunctioning.	▶ Change the bulb as soon as possible.

Display symbol	Display message	Possible cause / result	Possible solution
	Brake lamp right	The right-hand brake lamp is malfunctioning.	▶ Change the bulb as soon as possible.
	Third brake lamp	The third brake lamp is malfunctioning. This message will only appear if all LEDs have failed.	▶ Visit an authorized Sprinter Dealer as soon as possible.
	High beam left	The left-hand high-beam headlamp is malfunctioning.	▶ Change the bulb as soon as possible.
	High beam right	The right-hand high-beam headlamp is malfunctioning.	▶ Change the bulb as soon as possible.
	License plate lamp	A license plate lamp is malfunctioning.	▶ Change the bulb as soon as possible.
	Foglamp front left	The left-hand front foglamp is malfunctioning.	▶ Change the bulb as soon as possible.
	Foglamp front right	The right-hand front foglamp is malfunctioning.	▶ Change the bulb as soon as possible.
	Rear foglamp	The rear foglamp is malfunctioning.	▶ Change the bulb as soon as possible.
	Parking lamp front left	The front left-hand standing lamp/side marker lamp is malfunctioning.	▶ Change the bulb as soon as possible.
	Parking lamp front right	The front right-hand standing lamp/side marker lamp is malfunctioning.	▶ Change the bulb as soon as possible.
	Reverse lamp	A reverse lamp is malfunctioning.	▶ Change the bulb as soon as possible.
	Tail lamp left	The left-hand tail lamp is malfunctioning.	▶ Change the bulb as soon as possible.
	Tail lamp right	The right-hand tail lamp is malfunctioning.	▶ Change the bulb as soon as possible.
	Perim. lamps	A perimeter lamp is malfunctioning.	▶ Change the bulb as soon as possible.

Display symbol	Display message	Possible cause / result	Possible solution
	Additional ind. lamps	An additional turn signal is malfunctioning.	▶ Visit an authorized Sprinter Dealer as soon as possible.
	Cornering lamp left	The left-hand cornering lamp* is malfunctioning.	▶ Visit an authorized Sprinter Dealer as soon as possible.
	Cornering lamp right	The right-hand cornering lamp* is malfunctioning.	▶ Visit an authorized Sprinter Dealer as soon as possible.
	Trailer turn signal left	The left-hand turn signal on the trailer is malfunctioning.	▶ Change the bulb as soon as possible.
	Trailer turn signal right	The right-hand turn signal on the trailer is malfunctioning.	▶ Change the bulb as soon as possible.
	Trailer tail lamp	A trailer tail lamp or license plate lamp is malfunctioning.	▶ Change the bulb as soon as possible.
	Switch off lights	You have forgotten to switch off the lights when leaving the vehicle.	▶ Switch off the lights.
	Lights on automatic. Remove key	Automatic headlamp mode is active (▷ page 78). The key is in the ignition lock and the driver's door is open.	▶ Remove the key.
	Replace key Visit workshop	The authorization to drive must be checked.	▶ Visit an authorized Sprinter Dealer.

Display symbol	Display message	Possible cause / result	Possible solution
	Warning Tire defect	One or more tires are deflating. The respective tire is shown in the multi-function display.	▶ Carefully bring the vehicle to a halt, avoiding abrupt steering and braking maneuvers. ▶ If necessary, change the wheel.
	Check tire(s)	The tire pressure in one or more tires is already below the minimum value. The respective tire is shown in the multi-function display.	▶ Carefully bring the vehicle to a halt, avoiding abrupt steering and braking maneuvers. ▶ Check and adjust tire pressure as required. ▶ If necessary, change the wheel. The telltale extinguishes after a few minutes of driving if the malfunction has been corrected.

Display symbol	Display message	Possible cause / result	Possible solution
	Engine oil level Stop, turn engine off	There is insufficient or no oil in the engine. There is a risk of engine damage.	▶ Stop your vehicle as soon as it is safe to do so. ▶ Switch off the engine. ▶ Check the engine oil level using the dipstick (▷ page 189). ▶ If the oil level is correct, have the malfunction rectified immediately at an authorized Sprinter Dealer. ▶ If there is insufficient or no oil in the engine, have the vehicle towed to an authorized Sprinter Dealer.
	Engine oil level Check oil level	The engine oil level has dropped to a critical level.	▶ Check the engine oil level (▷ page 188) and add oil as necessary. ▶ Have the engine checked for possible leaks if you are having to add engine oil more frequently than normal.
	Engine oil Add 1.0 quart (Canada: liter)	The engine oil level is too low.	▶ Check the engine oil level (▷ page 189) the next time you refuel and add oil if necessary.

Display symbol	Display message	Possible cause / result	Possible solution
	Engine oil level Reduce oil level	You have added too much engine oil. There is a risk of damage to the engine or the catalytic converter.	▶ Check the engine oil level and have any excess oil siphoned off at the nearest refueling station (▷ page 190). The engine or the catalytic converter could be damaged. ▶ If the oil level is correct, have the malfunction rectified as soon as possible at an authorized Sprinter Dealer.
	Oil sensor Visit workshop	The measuring system is malfunctioning.	▶ Have the measuring system checked at an authorized Sprinter Dealer.
	Engine oil level Not when eng. running	You are attempting to check the engine oil level even though the engine is running.	▶ Switch off the engine. ▶ Check the engine oil level (▷ page 187).
	Reserve fuel Drive to a gas station	The fuel level has fallen into the reserve range.	▶ Refuel at the nearest gas station (▷ page 184).
	Tank open Check filler cap	The fuel filler cap is not closed.	▶ Close the fuel filler cap. A clicking sound indicates that the fuel filler cap is closed. ▶ If the malfunction continues to be indicated, have it rectified immediately at an authorized Sprinter Dealer.

Display symbol	Display message	Possible cause / result	Possible solution
	Doors open	You are already driving at walking pace, even though not all the doors are closed.	▶ Close the doors.
	Hood open	You are already driving at walking pace, even though the hood is not closed.	▶ Close the hood.
	Water in Fuel Visit workshop	The water that has collected in the water separator has reached the maximum level.	▶ Drain the water separator (▷ page 317). or ▶ Have the water separator drained at an authorized Sprinter Dealer.
	Washer fluid Check level	The washer fluid level has dropped to approximately ⅓ of the reservoir capacity.	▶ Add windshield washer fluid (▷ page 193).

Warning triangle and warning lamp

The warning triangles are behind the driver's seat.

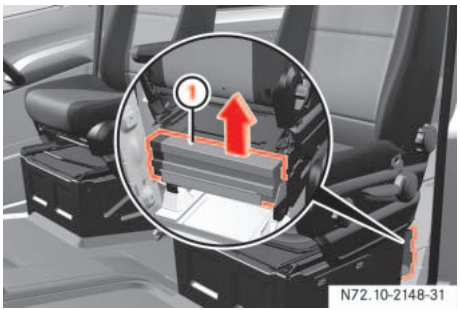

① Warning triangles

▶ Remove warning triangles ① from the brackets upward.

Fire extinguisher

The fire extinguisher is secured to the front of the co-driver's seat base.

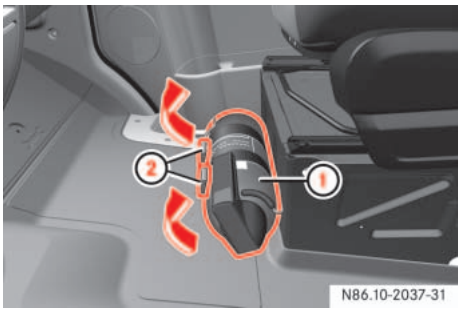

① Fire extinguisher
② Tabs

▶ Pull tabs ② upward.

▶ Take fire extinguisher ① out of the bracket.

ℹ

Read the instructions on the fire extinguisher carefully and familiarize yourself with its operation.

First-aid kit

The first-aid kit is located in the storage compartment in the co-driver's door.

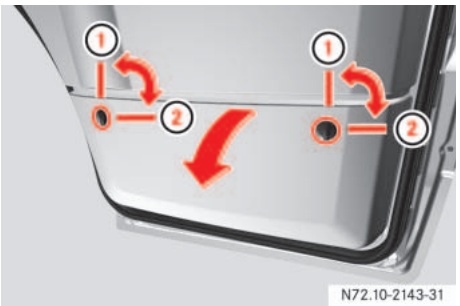

① Locked
② Unlocked

Turn the two quick-release locks clockwise to unlock ② and fold out the cover.

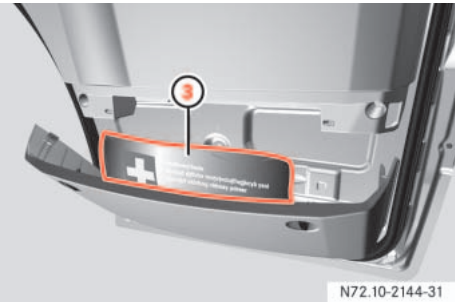

③ First-aid kit

ℹ

Check the expiry dates of the first-aid kit materials every year, and replace them if necessary.

Jack and vehicle tool kit

The jack and the vehicle tool kit are located under the hatch in the co-driver's footwell.

Warning ⚠

To avoid the risk of causing serious or fatal injury, or damage to the vehicle, please bear the following points in mind:

- The jack is designed only to raise the vehicle for a short time, for example while a wheel is being changed.

  It is not designed to enable work to be carried out underneath the vehicle.
- The jack must be placed on a firm, flat surface only.
- Do not change wheels on uphill or downhill gradients under any circumstances.
- Do not crawl under the vehicle if it is only supported by the jack.
- Make sure that no persons are present in the vehicle when raising the vehicle.
- Do not start the engine while the vehicle is raised.
- Make sure that the distance between the underside of the tires and the ground does not exceed 30 mm.
- If work is to be carried out under the vehicle, the vehicle must be placed on stands.

① Quick-release lock
② Unlocked

▶ **To unlock:** turn quick-release lock ① counterclockwise or clockwise.

▶ Remove the cover.

▶ **To lock:** press quick-release lock ① down until it engages.

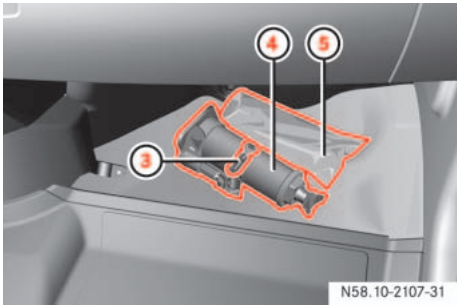

③ Tensioning lever
④ Jack
⑤ Vehicle tool kit

▶ Remove the vehicle tool kit.

▶ Pull tensioning lever ③ upward and unhook the retaining strap of jack ④.

▶ Remove jack ④ upward out of the retainer.

ℹ

Place the jack into the retainer as shown when storing it back into place. Make sure that the jack's retaining strap is hooked in and tensioned.

Spare wheel

If you are replacing the tires on the vehicle, you may use the spare wheel as a road wheel provided that:

- the tires are no more than 6 years old
- the wheel and tire have the same specified design as the road wheels

The spare wheel is located in a spare wheel bracket under the rear of the vehicle.

! CAUTION

Check regularly that the spare wheel is secured correctly.

More information about tire inflation pressures can be found in the "Operation" section (▷ page 213).

Panel van / crewbus

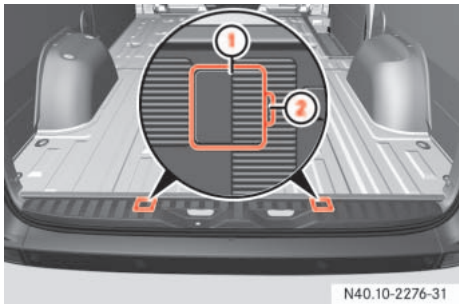

① Cover
② Recess

▶ Open the rear doors (▷ page 61).

▶ Insert a screwdriver into recesses ② and pry off covers ①.

▶ Using the wheel wrench from the vehicle tool kit (▷ page 300), now unscrew the visible bolts approximately 20 turns counterclockwise.

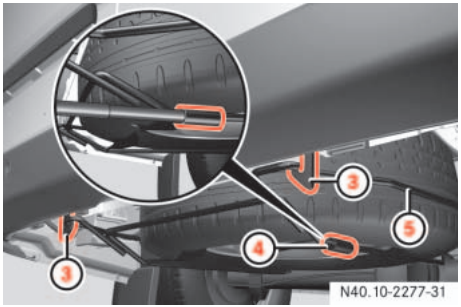

③ Securing hook
④ Sleeve
⑤ Spare wheel bracket

▶ Raise spare wheel bracket ⑤ slightly and release left securing hook ③.

▶ Slide the pump lever for the jack into sleeve ④ on spare wheel bracket ⑤.

▶ Raise spare wheel bracket ⑤ using the pump lever and release right securing hook ③.

▶ Slowly lower spare wheel bracket ⑤ to the ground.

▶ Raise spare wheel bracket ⑤ slightly and pull the pump lever out of sleeve ④.

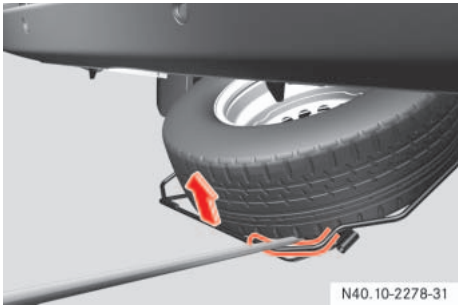

▶ Use the pump lever to raise the spare wheel beyond the rear end of the spare wheel bracket.

▶ Carefully remove the spare wheel from the bracket.

Warning ⚠

Take care not to trap your fingers when you lift out the spare wheel.

Chassis

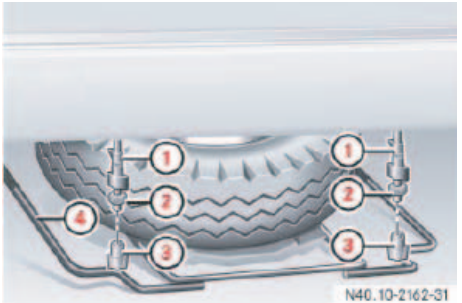

Example illustration of chassis

① Securing hook
② Fixing nuts
③ Thumb nuts
④ Spare wheel bracket

▶ Loosen thumb nuts ③ by hand and remove.

▶ Loosen fixing nuts ② to the thread end.

▶ Raise spare wheel bracket ④ slightly and release left securing hook ①.

▶ Slide th pump lever for the jack into sleeve on the right-hand side of the spare wheel bracket ④.

- ▶ Raise spare wheel bracket ④ using the pump lever and release right securing hook ①.
- ▶ Slowly lower spare wheel bracket ④ to the ground.
- ▶ Raise spare wheel bracket ④ slightly and pull the pump lever out of sleeve.

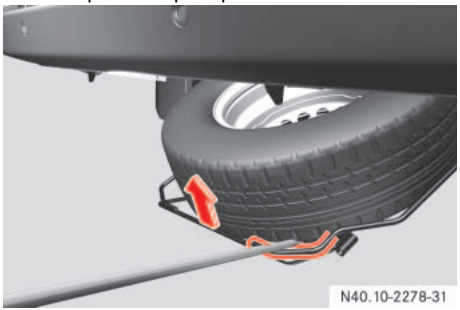
N40.10-2278-31

- ▶ Use the pump lever to raise the spare wheel beyond the rear end of the spare wheel bracket.
- ▶ Carefully remove the spare wheel from the bracket.

Warning ⚠

Take care not to trap your fingers when you lift out the spare wheel.

Premium tire sealant*

The Premium tire sealant is located in the storage compartment in the right-hand doorway.

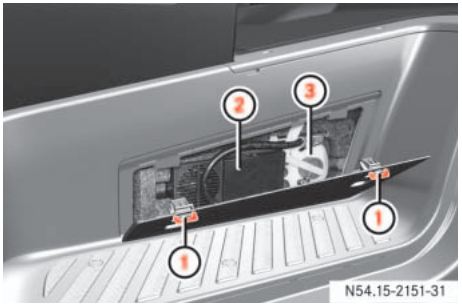
N54.15-2151-31

① Latching springs
② Electric air pump
③ Premium tire sealant

- ▶ **To open:** press both latching springs ① down and remove the cover.
- ▶ **To close:** attach the cover at the bottom and fold it closed.
- ▶ Press both latching springs ① up until they engage.

Chock

Panel Van

The wheel chock (optional for model vehicle type 2500) is on the right-hand side of the load compartment.

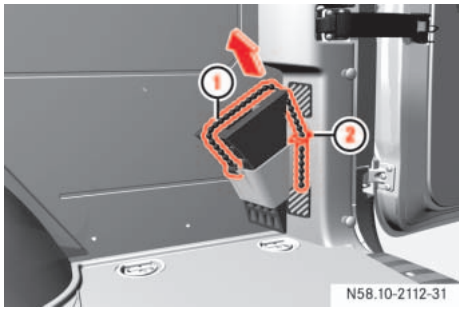
N58.10-2112-31

Panel van

① Retaining band
② Retainer

- ▶ Pull support cable ① slightly downward and pull it out of retainer ②.
- ▶ Pull out the wheel chock.

! CAUTION

When storing it away, make sure that the chock is secured in the retainer by the retaining band.

Chassis

The wheel chock is on the left-hand side behind the rear axle.

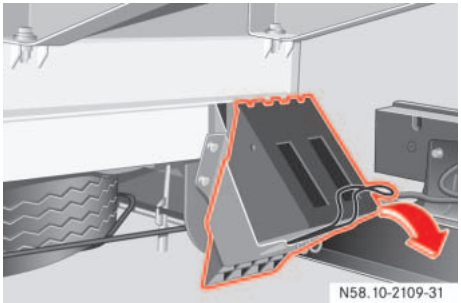

Example illustration of chassis

▶ Pull the retainer springs down and remove the chock.

! CAUTION

When storing it away, make sure that the chock is secured in the retainer by the retainer springs.

Sliding sunroof*

If it is no longer possible to close the sliding sunroof, you can close it manually by operating the drive located behind the trim at the front of the sliding sunroof.

① Trim
② Cover cap

▶ Remove cover cap ② from trim ①.

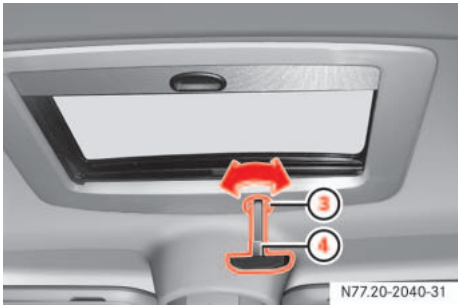

③ Opening
④ Emergency operation key

▶ Take emergency operation key ④ from the vehicle document wallet in the glove box.

▶ Insert emergency operation key ④ into opening ③ of the drive.

▶ Open or close the sliding sunroof by turning it in the appropriate direction.

▶ Pull out emergency operation key ④ and place it in the vehicle document wallet.

▶ Clip cover cap ② back on.

- With the ignition switched on (▷ page 67), press and hold the sliding sunroof switch (▷ page 145) forward or backward for 45 seconds to reset the electronics.
- Reset the sliding sunroof (▷ page 146).

Releasing the parking lock manually

In the event of a malfunction, it is possible to manually release the selector lever from the lock in parking position **P**, for example to have the vehicle towed away.

① Cover cap

- Remove cover cap ①.

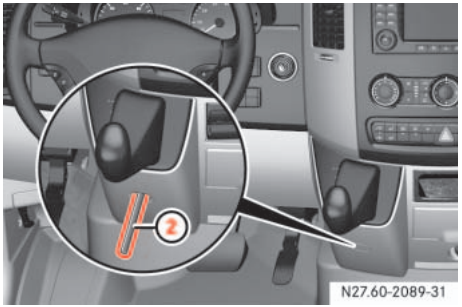

② Pencil

- Insert a pencil ② or similar implement into the opening.
- Press pencil ② in and at the same time move the selector lever out of position **P**.
- Pull out pencil ②.
- Clip cover cap ① back on.

▼ Changing bulbs

Bulbs and lights are an important aspect of vehicle safety. For this reason, make sure that all bulbs are in working order at all times.

Before changing bulbs

- Switch off the lights to avoid a short circuit.
- Only touch new bulbs with a clean lint-free cloth or something similar. Do not work with wet or greasy fingers.
- Only fit 12 V bulbs of the same type as before and of the correct wattage.
- Have the headlamp setting checked regularly.
- If the newly installed bulb does not light up either, visit an authorized Sprinter Dealer.
- Have the following LEDs and bulbs changed at an authorized Sprinter Dealer:
  - The additional turn signals in the exterior mirrors
  - The third brake lamp (cargo and passenger vans only)*
  - The bi-xenon headlamps*
  - The foglamps*

Warning ⚠

Bulbs and bulb holders can become very hot. For this reason, allow the light to cool down before changing the bulb.

Keep bulbs out of the reach of children.

Never use a bulb which has been dropped. Such a bulb may explode and injure you.

H7 bulbs are pressurized and may explode when changed. You should therefore wear eye protection and gloves when you are changing them.

Front bulbs

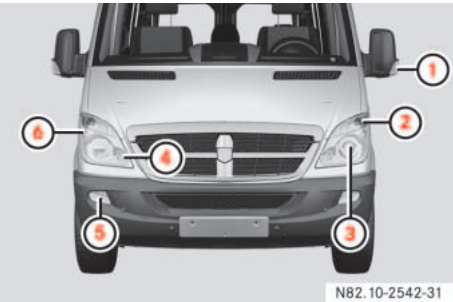

	Bulb	Model
①	Additional turn signal	PY 16 W
②	Turn signal	PY 21 W
③	Halogen headlamp: low-beam headlamp	H7 55 W
	Bi-xenon headlamp*: low-beam headlamp / high-beam headlamp	D1S-35 W
④	Halogen headlamp: high-beam headlamp	H7 55 W
	Cornering lamp* (Canada only)	H7 55 W
⑤	Foglamp*	H11 55 W
⑥	Parking lamp/side marker/standing lamp (Canada only)	WY 5 W

▶ Switch off the lighting.

▶ Open the hood (▷ page 185).

Bi-xenon headlamps*

Warning ⚠

Xenon bulbs carry a high voltage. You could receive a serious or fatal electric shock if you touch the electrical contacts on the xenon bulbs. Do not remove housing cover ② (▷ page 307) if the headlamps are xenon headlamps.

Do not change xenon bulbs yourself. Instead, always have them changed at an authorized Sprinter Dealer which has the necessary specialist knowledge and tools to carry out the work required.

The manufacturer recommends that you use an authorized Sprinter Dealer for this purpose. In particular, work relevant to safety or on safety-related systems must be carried out at an authorized Sprinter Dealer.

High-beam headlamps, low-beam headlamps

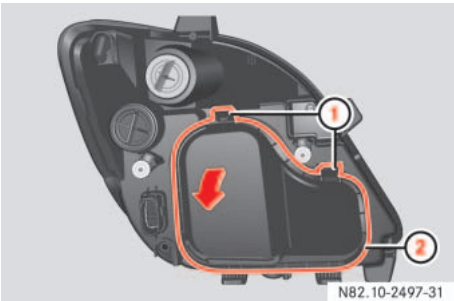

① Catches
② Housing cover

- ▶ Press catches ① down.
- ▶ Swing housing cover ② in the direction of the arrow and remove it.

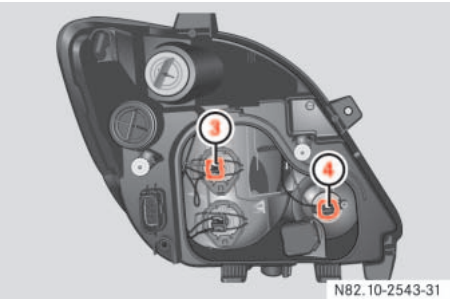

③ Low-beam headlamps
④ Halogen high-beam headlamps/xenon headlamp cornering lamp*

- ▶ Pull the connector off the bulb holder.
- ▶ Unclip the retainer spring and remove the bulb.
- ▶ Insert the new bulb such that the base locates in the recess of the bulb holder.
- ▶ Clip on the retainer spring and plug the connector onto the bulb.
- ▶ Insert housing cover ② into lower brackets.
- ▶ Swing housing cover ② toward headlamp casing.
- ▶ Pull first the inner and then the outer catch ① upward until it audibly engages in place.

Turn signals

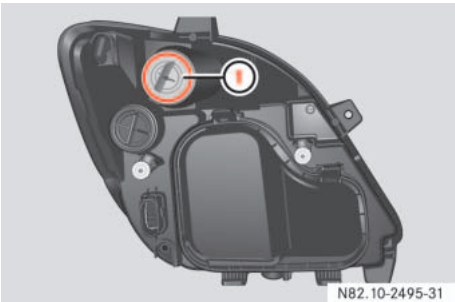

① Bulb holder

- ▶ Turn bulb holder ① and the bulb counterclockwise and remove the holder.
- ▶ Press down on the bulb, turn it counterclockwise and remove it from bulb holder ①.
- ▶ Press the new bulb into bulb holder ① and screw it in clockwise.
- ▶ Place bulb holder ① into the lamp and turn it clockwise.

Parking lamps/side marker

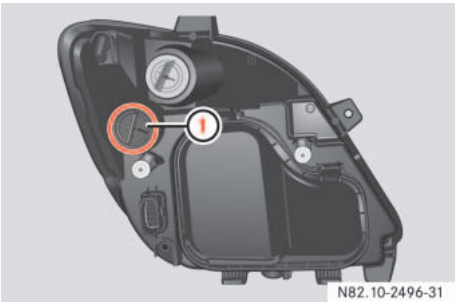

① Cap

- ▶ Turn cap ① counterclockwise and remove it.
- ▶ Remove the bulb holder together with the bulb.
- ▶ Pull the bulb out of the bulb holder.
- ▶ Press the new bulb into the bulb holder.
- ▶ Insert the bulb holder with bulb into the reflector.
- ▶ Replace cap ① and turn it clockwise to the stop.

Rear bulbs

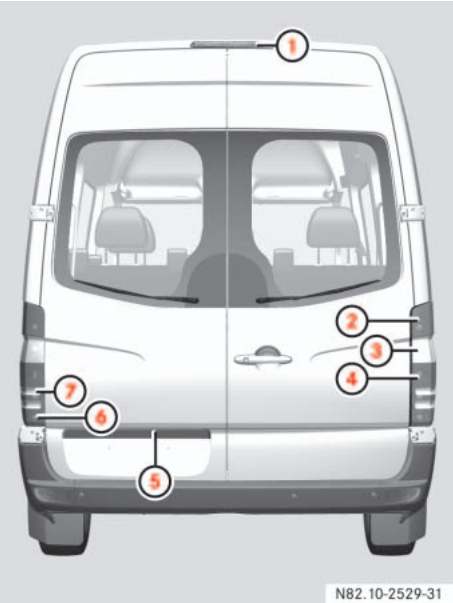

Panel van/crewbus

	Bulb	Model
①	Third brake lamp	LED
②	Brake lamp	P 21 W
③	Turn signal	PY 21 W
④	Tail lamp / side marker / Standing lamp (Canada only)	R 5 W
⑤	License plate lamp	W 5 W
⑥	Rear foglamp (driver's side)	P 21 W
⑦	Reverse lamp	P 21 W

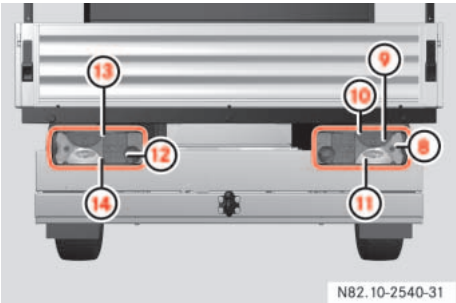

Example illustration of chassis

	Bulb	Model
⑧	Perimeter lamp/side marker	R 5 W
⑨	Turn signal	PY 21 W
⑩	Brake lamp	P 21 W
⑪	Reverse lamp	P 21 W
⑫	Rear foglamp (driver's side)	P 21 W
⑬	Tail lamp	R 5 W
⑭	License plate lamp	R 5 W

Changing the rear bulbs (van / crewbus)

▶ Switch off the lighting.

Rear lamp units

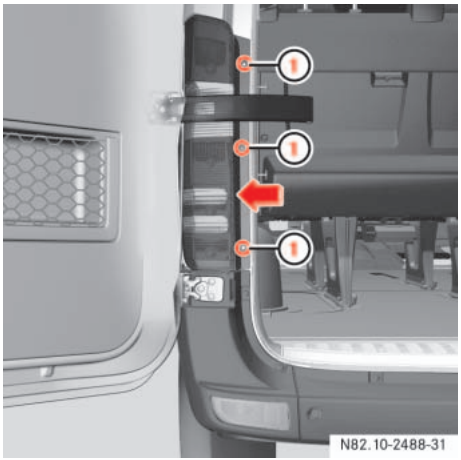

① Securing screws

▶ Undo screws ① and remove the rear lamp unit in the direction of the arrow.

▶ Remove the connector.

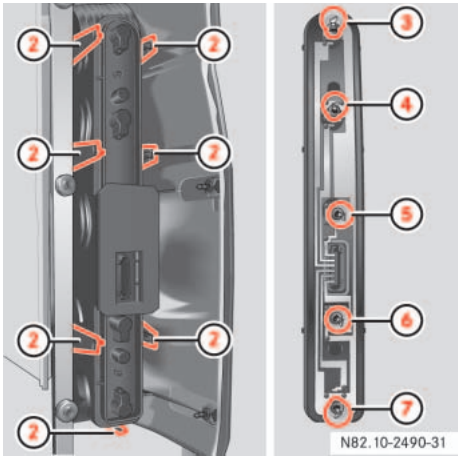

② Retaining lugs
③ Brake lamp
④ Side marker, Standing lamp (Canada only), tail lamp
⑤ Reverse lamp
⑥ Turn signal lamp
⑦ Rear foglamp (driver's side)

▶ Release retaining lugs ② and remove the bulb holder from the rear lamp unit.

▶ Press down on the bulb, turn it counter-clockwise and remove it from the holder.

▶ Press the new bulb into the bulb holder and screw it in clockwise.

▶ Plug the connectors into the bulb holder.

▶ Fit the rear lamp unit.

To do this, clip the bulb holder into the three holes provided on the side and tighten screws ①.

Changing the rear bulbs (chassis)

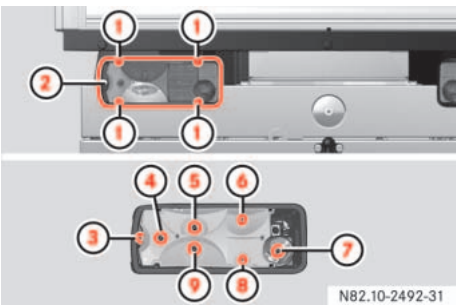

Example illustration of chassis

① Securing screws
② Lens
③ Perimeter lamp, side marker
④ Turn signal lamp
⑤ Brake lamp

⑥ Tail lamp
⑦ Rear foglamp (driver's side)
⑧ License plate lamp
⑨ Reverse lamp

▶ Switch off the lighting.

▶ Undo screws ① and remove lens ②.

▶ Press the bulb into the bulb holder and screw it out in a counterclockwise direction.

▶ Press the new bulb into the bulb holder and screw it in clockwise.

▶ Replace lens ② and retighten screws ①.

Changing additional bulbs

▶ Switch off the lighting.

Identification lamps W 5 W (cab chassis only)

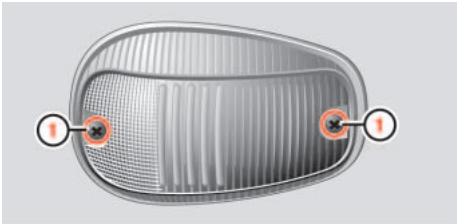

① Securing screws
② Bulb holder

▶ Switch off the lighting.

▶ Undo screws ① and remove lamp housing.

▶ Turn the bulb holder ②and remove it together with the bulb.

▶ Pull the bulb out of the bulb holder ②.

▶ Press the new bulb into the bulb holder ②.

▶ Screw the bulb holder ② containing the bulb into the lamp housing.

▶ Carefully reattach the lamp housing and retighten screws ①.

License plate lamp W 5 W

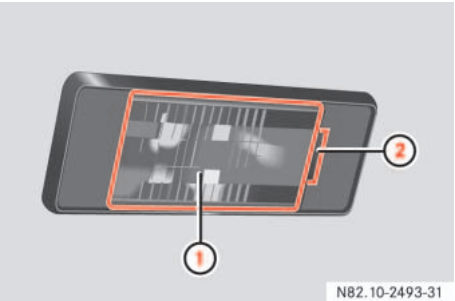

① Bulb holder with lens
② Recess

▶ Insert a screwdriver or similar implement into recess ② and carefully pry off lens ①.

▶ Pull the bulb out of the bulb holder.

▶ Insert the new bulb.

▶ Align lens ① and clip it in, making sure that it engages.

Clearance lamp* W 5 W
(cargo and passenger vans only)

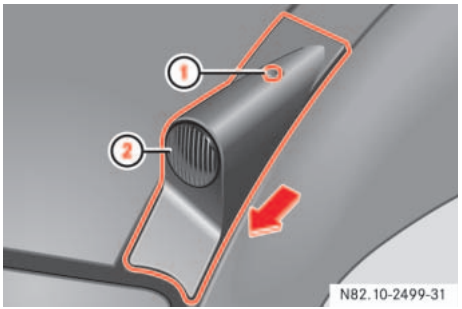

① Securing screw
② Lamp housing

▶ Undo screw ① and remove lamp housing ② in the direction of the arrow.

▶ Turn the bulb holder and remove it together with the bulb.

▶ Pull the bulb out of the bulb holder.

▶ Press the new bulb into the bulb holder.

▶ Screw the bulb holder containing the bulb into the lens.

▶ Replace lamp housing ② in the opposite direction to the arrow and retighten screw ①.

Side marker lamps* W 5 W
The lamps are mounted on the side of the vehicle.

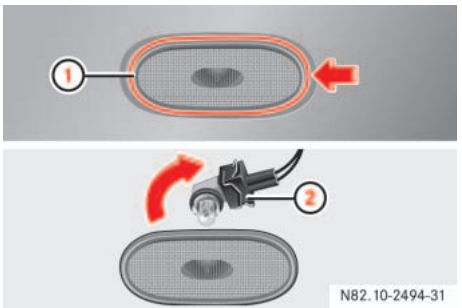

① Lens
② Bulb holder

▶ Insert a screwdriver or similar implement at the side and carefully pry off lens ① in the direction of the arrow.

▶ Turn bulb holder ② in the direction of the arrow and remove it together with the bulb.

▶ Remove bulb ② from the bulb holder.

▶ Press the new bulb into bulb holder ②.

▶ Screw bulb holder ② together with the bulb into the lens.

▶ On vans and crewbuses, reattach the lens together with bulb holder ②.

Identification lamps 12V 4CP
(cargo vans only)

① Securing screw

▶ Remove screw ① and remove the lamp housing.

▶ Press the bulb into the socket, turn it counterclockwise and remove it from the holder.

▶ Press the new bulb into the bulb holder and screw it in clockwise.

▶ Carefully reattach the lamp housing and retighten screw ①.

Entry lamp* W 5 W

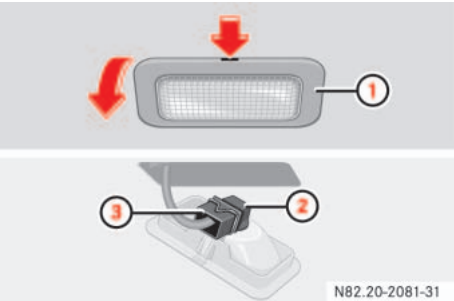

① Lamp housing
② Bulb holder
③ Cable connector

▶ Press in the latching springs of lamp housing ① using a suitable tool, for example a screwdriver.

▶ Pry off lamp housing ①.

▶ Remove cable connector ③.

▶ Turn bulb holder ② in the direction of the arrow and remove it together with the bulb.

▶ Remove bulb ② from the bulb holder.

▶ Press the new bulb into bulb holder ②.

▶ Screw bulb holder ② together with the bulb into lamp housing ①.

▶ Connect cable connector ③. The connector's locking spring must engage.

▶ Align lamp housing ① and engage it.

Interior lamp K 18 W

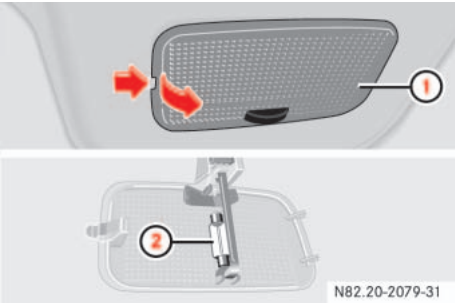

Interior lamp

① Lamp housing
② Festoon lamp

- ▶ Switch off the lighting.
- ▶ Press in the latching springs of lamp housing ① using a suitable tool, for example a screwdriver.
- ▶ Pry off lamp housing ①.
- ▶ Remove bulb ② from the bulb holder.
- ▶ Insert new bulb ②.
- ▶ Align lamp housing ① on the right and engage it.

! CAUTION

Have the interior lamps in the overhead control panel changed at an authorized Sprinter Dealer which has the necessary specialist knowledge and tools to carry out the work required.
The manufacturer recommends that you use an authorized Sprinter Dealer for this purpose.

You could damage the overhead control panel.

▼ Changing the batteries

If the remote control batteries (remote keyless entry) are discharged, you will only be able to lock and unlock the vehicle manually using the key.

If the batteries in the auxiliary heating remote control are discharged, you will only be able to switch the auxiliary heating on or off using the auxiliary heating / heater booster switch inside the vehicle (▷ page 140).

It is advisable to have the batteries changed at an authorized Sprinter Dealer.

Warning

Keep batteries away from children.

Consult a doctor immediately if a battery is swallowed.

Dispose of used batteries in an environmentally responsible manner.

Danger of explosion if the battery is not correctly replaced.

Replacements should always be either of the same type or one which has been recommended by the manufacturer.

Environmental note

Batteries contain materials that can harm the environment if disposed of improperly. Recycling of batteries is the preferred method of disposal. Many states require sellers of batteries to accept old batteries for recycling.

ⓘ

Always replace all the batteries at the same time. Suitable batteries are available from an authorized Sprinter Dealer. You can also have the batteries changed there and return used batteries.

Remote control (remote keyless entry)

You need two CR 2025 3 V cell batteries or equivalent.

Do not touch the battery contact surfaces.

ⓘ

When inserting the batteries, make sure that they are clean and lint-free.

! CAUTION

Do not operate the remote control while the battery is being replaced.

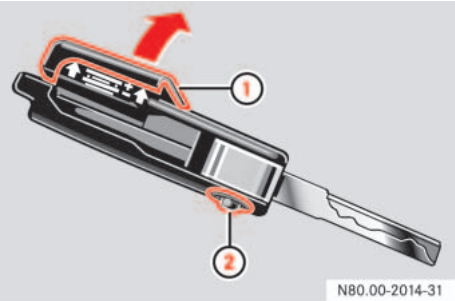

① Battery cover
② Release button for mechaniocal key

▶ Release the mechanical key by pressing the release button ②.

▶ Remove the battery cover ①.

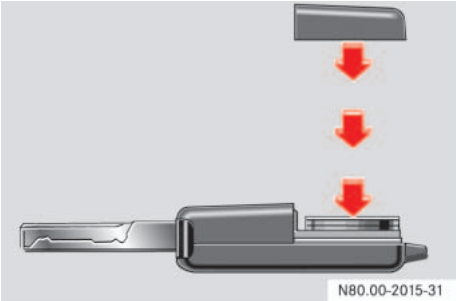

▶ Remove the battery and install a new one (note correct polarity; positive terminal up).

▶ Press battery cover ① until it snaps into place.

▶ Check the function of all remote control buttons on vehicle.

Auxiliary heating remote control*

You need three Micro / AAA / LR03 batteries or equivalent.

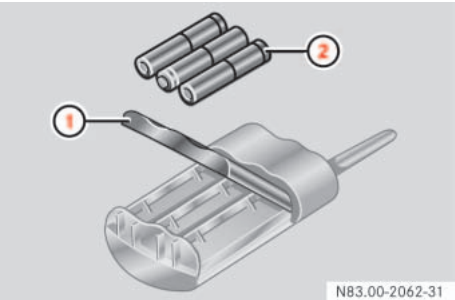

① Battery cover
② Batteries

▶ Remove battery cover ① using a suitable implement, for example a key, and put it to one side.

▶ Remove old batteries ②.

▶ Insert three new batteries ②. Observe the plus and minus signs in the remote control.

▶ Slide battery cover ① onto the remote control as illustrated.

▶ Check the auxiliary heating functions on the vehicle using the remote control.

▼ Fuel system

Draining the fuel filter

On vehicles with a diesel engine, it is necessary to drain the fuel filter if the indicator lamp lights up.

! CAUTION

Drain the fuel filter with water separator immediately if the indicator lamp lights up. The engine could be damaged.

Environmental note

When handling, storing and disposing of diesel and diesel mixtures, please observe the relevant regulations.

To this end, have the fuel filter with water separator drained at an authorized Sprinter Dealer which has the necessary specialist knowledge and tools to carry out the work required.

The fuel filter with water separator is in the engine compartment.

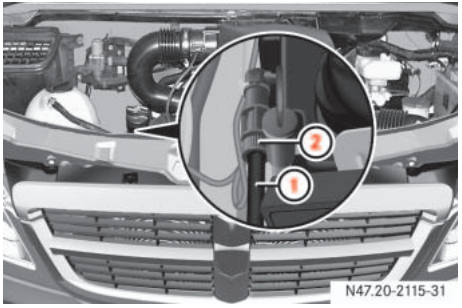

① Drain hose
② Drain plug

▶ Apply the handbrake and move the selector lever to position **P**.

▶ Switch off the engine and open the hood (▷ page 185).

▶ Place a suitable container under drain hose ①.

▶ Switch on the ignition (▷ page 67).

▶ Unscrew drain plug ② immediately one turn or until liquid flows out of drain hose ①.

▶ Make sure that the liquid flows into the container under drain hose ①.

▶ Close drain plug ② as soon as approximately 0.2 US qt (0.2 l) of liquid has been collected.

ℹ

The electric fuel delivery pump stops the flow of liquid automatically after 30 seconds.

▶ When you have drained the fuel filter with water separator, turn the key back to position **0** in the ignition lock (▷ page 67).

▶ Dispose of the collected liquid in an environmentally responsible manner.

Environmental note

Have the drained liquid disposed of at an authorized Sprinter Dealer.

▶ Drain the fuel filter again if the indicator lamp remains lit.

! CAUTION

If the indicator lamp remains lit even after draining for the second time, have the cause checked immediately at an authorized Sprinter Dealer.

Bleeding the fuel system

If the fuel tank on a vehicle with diesel engine has been run dry, there is a possibility that the engine may not start immediately after refueling because air may remain in the fuel system.

ⓘ

Too many attempts to start the engine could drain the battery.

After refueling:

▶ Switch on the ignition for approximately 10 seconds.

▶ Start the engine repeatedly for no more than 60 seconds until it runs smoothly.

If the engine does not start:

▶ Wait approximately 2 minutes.

▶ Then start the engine repeatedly again for no more than 60 seconds until it runs smoothly.

If this attempt also fails, do not continue to start the engine. Consult an authorized Sprinter Dealer.

▼ Replacing the wiper blades

! CAUTION

Do not open the hood while the wiper arms are folded away from the windshield. You would damage the hood and the wiper arms.

Do not fold the wiper arms onto the windshield without wiper blades being attached. You could scratch the windshield.

For your own convenience, have this work carried out at an authorized Sprinter Dealer.

Removing the wiper blades

Warning ⚠

When the windshield wipers are set to intermittent wipe or the rain sensor is active, the windshield wipers could move at any time and injure yourself or others upon contact with them.

Always remove the key from the ignition lock before replacing the wiper blades.

▶ Apply the handbrake (▷ page 115).

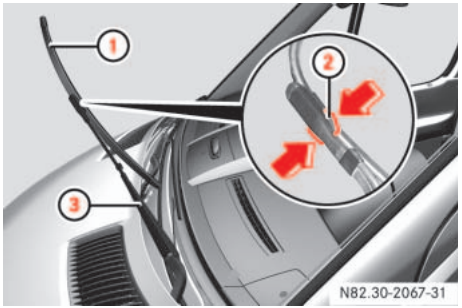

① Wiper blade
② Retaining clips
③ Wiper arm

▶ Fold the wiper arms away from the windshield.

▶ Press two retaining clips ② together in the direction of the arrow and fold wiper blade ① away from wiper arm ③.

▶ Pull wiper blade ① up and out of the retainer.

Installing the wiper blades

▶ Slide wiper blade ① into the retainer on the wiper arm.

▶ Press wiper blade ① onto wiper arm ③ until you hear retaining clips ② engage.

▶ Fold wiper arm ③ onto the windshield again.

▼ Flat tire

The vehicle is either equipped with a spare wheel or the Premium tire sealant*.

The spare wheel is located under the rear end of the vehicle if the vehicle is not equipped with Premium tire sealant* (▷ page 301).

Warning ⚠

Defective or worn tires, and tire pressures that are either too high or too low, can cause significant changes in the vehicle's handling and braking characteristics. There is an increased risk of an accident.

Replace the tires, including the spare tire, at least every 6 years, regardless of the degree of treadwear. Check the tire pressure on the spare wheel at regular intervals.

When you replace a tire, the manufacturer also recommends that you replace the tire valve.

! CAUTION

For safety reasons, the following tire valves from the company Schrader must be used on the vehicles:

- TR 600 for vehicle model type 2500
- TR 418 for vehicle model type 3500

Preparing the vehicle

▶ Park the vehicle as far away as possible from traffic and on a level, firm, and non-slip surface.

▶ Switch on the hazard warning lamps.

▶ Apply the handbrake.

▶ Engage first gear or reverse gear or move the selector lever to position **P**.

▶ Any passengers should leave the vehicle, ensuring that they are not endangered as they do so.

▶ Place the warning triangle or hazard warning lamps at a suitable distance.

Observe legal requirements.

Changing a wheel

Warning ⚠

To avoid the risk of causing serious or fatal injury, or damage to the vehicle, please bear the following points in mind:

- The jack is only designed to raise the vehicle for a short time when changing a wheel.
- Position the jack under the appropriate jacking point only (▷ page 322). Check that the jack is correctly seated under the jacking point before raising the vehicle.
- The jack must be placed on a firm, flat surface only.

▷▷

- Before raising the vehicle, also secure it against rolling away, for example using chocks or similar. Never release the handbrake while the vehicle is raised. Make sure that the distance between the underside of the tires and the ground does not exceed 1.2 in (3 cm). The vehicle could slip or topple off the jack.
- Do not reach under the raised vehicle with your hands or feet.
- Do not start the engine and avoid creating other vibrations while the vehicle is jacked up. The vehicle could slip off the jack.

Preparing the vehicle

Prepare the vehicle as described (▷ page 320).

▶ Prevent the vehicle from rolling away using chocks or similar.

Warning ⚠

The vehicle could slip off the jack on uphill and downhill gradients.

To avoid the risk of causing serious or fatal injury, or damage to the vehicle, do not change wheels on uphill and downhill gradients.

On a level road:

▶ Place the chocks in front of and behind the wheel diagonally opposite to the wheel that is to be changed.

▶ Take the vehicle tool kit and the jack from the footwell on the co-driver's side (▷ page 300).

▶ Remove the spare wheel from the spare wheel bracket (▷ page 301).

▶ For wheels with wheel bolts remove the wheel cover.

Wheel with wheel bolts

▶ Loosen the wheel bolts and nuts on the wheel you wish to change about one turn. Do not remove them.

As an extension for the wheel wrench, use the shaft from the jack's 3-part pump lever that has the largest diameter.

Hydraulic jack

▶ Assemble the three-part pump lever for the jack.

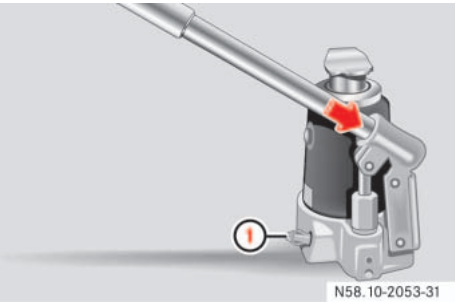

① Pressure release screw

▶ Close pressure release screw ①.

▶ To do this, turn the flattened section on the pump lever clockwise to the stop.

ℹ

Never turn pressure release screw ① more than 1 or 2 full turns. Hydraulic fluid could otherwise escape.

▶ Insert the pump lever into the recess on the jack and secure it by turning it clockwise.

▶ Make sure that the jack is positioned vertically under the jacking points described below.

▶ Raise the vehicle by pumping the lever until the wheel is raised clear of the ground.

Make sure that the distance between the underside of the tires and the ground does not exceed 1.2 in (3 cm).

Jacking point at the front axle

The vehicle jacking point is located under the longitudinal member in front of the front axle.

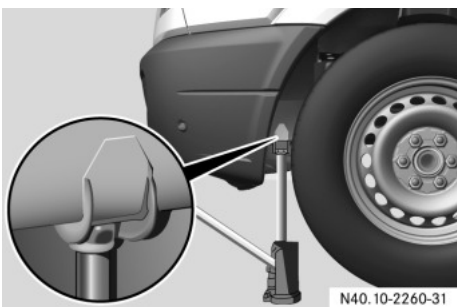

Jacking points at the rear axle

The vehicle jacking point is located under the longitudinal member in front of the rear axle.

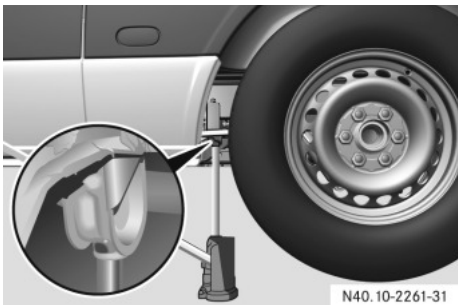

Vehicle model type 2500

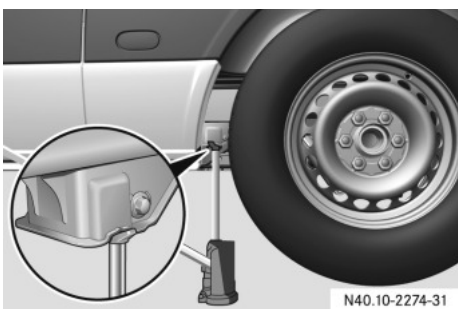

Vehicle model type 3500

! CAUTION

Do not apply the jack to the leaf spring or the differential housing.

Removing a wheel

▶ Unscrew the wheel bolts or wheel nuts.

! CAUTION

Do not place the wheel bolts or the wheel nuts in sand or dirt. The bolt and wheel hub threads could otherwise be damaged.

▶ For wheels with wheel nuts remove the wheel nut cover.

▶ Remove the wheel.

Mounting the new wheel

Warning ⚠

Replace the wheel bolts and wheel nuts if they are damaged or have become rusty.

Never oil or grease wheel bolts or wheel nuts.

If a wheel hub thread is damaged, you must not drive the vehicle.

Consult an authorized Sprinter Dealer which has the necessary specialist knowledge and tools to carry out the work required.

The manufacturer recommends that you use an authorized Sprinter Dealer for this purpose. In particular, work relevant to safety or on safety-related systems must be carried out at an authorized Sprinter Dealer.

For safety reasons, the manufacturer recommends that you only use wheel bolts and wheel nuts which have been approved for Sprinter vehicles. Other wheel bolts or wheel nuts could work loose.

▶ Clean the wheel and wheel hub contact surfaces.

▶ Push the wheel onto the wheel hub and press it on.

! CAUTION

If your vehicle is equipped with the tire pressure monitor, each wheel has an electronic component.

Tire mounting tools should not be applied in the area of the valve, as this could damage the electronic components.

Have the tires changed only at an authorized Sprinter Dealer.

Warning ⚠

Do not tighten the wheel bolts and wheel nuts completely while the vehicle is still jacked up. The vehicle could tip.

Wheels with centering by wheel bolts:

▶ Screw in the wheel bolts and tighten them finger-tight.

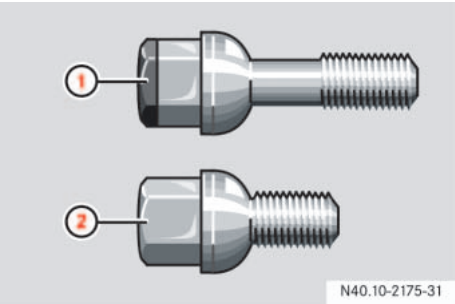

① Wheel bolt for light-alloy wheel
② Wheel bolt for steel wheel

ℹ On vehicles with light-alloy wheels, you will find short wheel bolts suitable for the steel spare wheel in the vehicle tool kit.

For wheels with wheel nuts:

▶ Center the wheel nut cover over the wheel and push it onto the wheel.

▶ Screw on the wheel nuts and tighten them finger tight.

ℹ Screw on the three wheel nuts that hold the wheel nut cover first.

Lowering the vehicle

▶ Slowly open the jack's pressure release screw one turn using the pump lever (▷ page 322) and lower the vehicle slowly.

▶ Put the jack to one side.

Tightening torque pattern

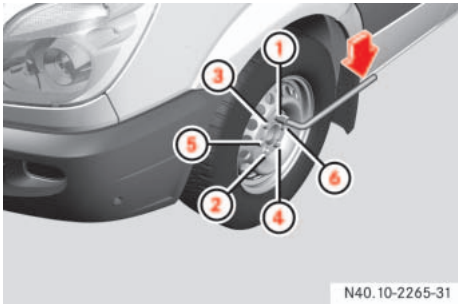

① – ⑥ Wheel bolts

▶ Tighten all the wheel bolts and wheel nuts evenly in the sequence indicated.

As an extension for the wheel wrench, use the shaft from the jack's 3-part pump lever that has the largest diameter.

! CAUTION

The tightening torque is:

- for wheel bolts 177 lb-ft (240 Nm) (steel wheel)/133 lb-ft (180 Nm) (light-alloy wheel).
- for wheel nuts 133 lb-ft (180 Nm)

▶ For wheels with wheel bolts attach the wheel cover.

Vehicles with wheel caps:
Make sure that the opening in the wheel cap is positioned over the tire vent.

Vehicles with center caps:
Make sure that the retaining lugs of the hub cap are positioned over the bolts.

ℹ
Give the middle of the center cap a knock to engage it on the wheel.

▶ Compress the piston of the hydraulic jack and close the pressure release screw.

▶ Store the jack and the remaining vehicle tools.

▶ Place the defective wheel in the spare wheel bracket after changing the wheel (▷ page 301).

▶ Check the tire pressure (▷ page 210).

▶ Retighten the wheel bolts and wheel nuts to the specified tightening torque once the vehicle has been driven for 30 miles (50 km).

Warning ⚠

For safety reasons, you must observe the following after changing a wheel:

- Have the tightening torque checked:
  - for wheel bolts 177 lb-ft (240 Nm) (steel wheel)/133 lb-ft (180 Nm) (light-alloy wheel) or
  - for wheel nuts 133 lb-ft (180 Nm).

  The wheels could otherwise come loose.
- Check the tire pressure and correct it if necessary
- Have the wheel bolts or wheel nuts retightened after 30 miles (50 km) to a torque of:
  - 177 lb-ft (240 Nm) (steel wheel)/ 133 lb-ft (180 Nm) (light-alloy wheel) for wheel bolts or
  - 133 lb-ft (180 Nm) for wheel nuts.
- Have the direction of tire rotation corrected, if reversed, as soon as possible at an authorized Sprinter Dealer. The vehicle handling characteristics could otherwise be affected.

Warning ⚠

Loose wheel nuts or bolts could cause the vehicle to lose a wheel while it is in motion. This would jeopardize the operating and road safety of the vehicle. You could lose control of the vehicle as a result, cause an accident and injure yourself or others.

If new or repainted wheels are mounted, the wheel bolts or wheel nuts must be retightened again after approximately 600 to 3000 miles (about 1000 to 5000 km).

Using Premium tire sealant*

You can use the Premium tire sealant to seal small punctures, particularly those in the tire tread. Tire sealants can be used at outside temperatures down to –22 °F (–30 °C).

Prepare the vehicle as described (▷ page 320).

Warning

Smoking, fire and naked flames are prohibited when handling Premium tire sealant.

Avoid creating sparks.

Warning

Your safety is at particular risk and the tire sealant is unable to repair a tire in the following situations:

- if there are cuts or punctures in the tire greater than 0.23 in (6 mm)
- if the rim is damaged
- if you have driven with very low tire pressures or with flat tires

Do not drive any further. Consult an authorized Sprinter Dealer which has the necessary specialist knowledge and tools to carry out the work required.

The manufacturer recommends that you use an authorized Sprinter Dealer for this purpose. In particular, work relevant to safety or on safety-related systems must be carried out at an authorized Sprinter Dealer.

CAUTION

Only connect the electric air pump to the 12 V socket (▷ page 170) on the center console (12 V, 25 A, 300 watts). You could otherwise damage the vehicle electrical system.

▶ Try to park the vehicle in such a way that the tire puncture is close to the ground. If the tire puncture cannot be seen, park the vehicle in such a way that the tire valve of the flat tire is in horizontal alignment with the axle.

▶ It is beneficial to the sealing process if you remove the foreign body that has pierced the tire, for example the screw or nail.

▶ Remove the Premium tire sealant, the accompanying "max. 50 mph (80 km/h)" sticker and the electric air pump from the storage compartment in the right-hand doorway (▷ page 303).

▶ Affix the sticker within the driver's field of vision.

Warning

Comply with the manufacturer's safety instructions as seen on the sticker on the electric air pump and the tire sealant bottle.

Warning

Tire sealant must not come into contact with your skin, eyes or clothing.

- If tire sealant comes into contact with your eyes or skin, immediately rinse thoroughly with clean water.
- Immediately change out of clothing that has been in contact with tire sealant.
- If an allergic reaction occurs, consult a doctor immediately.

Keep tire sealant away from children.

- If tire sealant is swallowed, immediately rinse your mouth out thoroughly and drink plenty of water.
- Do not induce vomiting. Consult a doctor immediately.

Do not inhale tire sealant fumes.

The tire sealant is water soluble. If tire sealant escapes, you can wash it away with water.

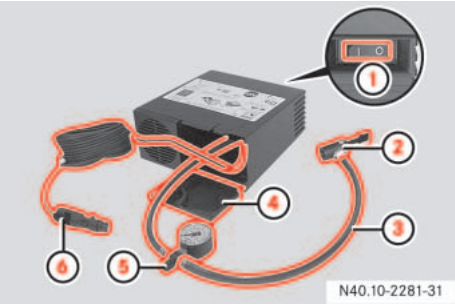

Electric air pump

① Switch
② Angle bracket
③ Electric air pump hose

④ Flap
⑤ Pressure gauge with pressure release screw
⑥ Connector with cable

▶ Open flap ④ on the electric air pump.

▶ Pull connector ⑥ and hose ③ out of housing together with pressure gauge ⑤.

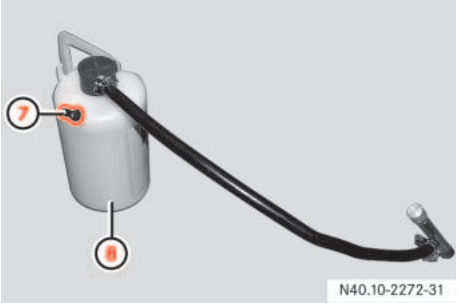

Tire sealant bottle for single tires

⑦ Valve
⑧ Tire sealant bottle with hook, hose and valve core extractor

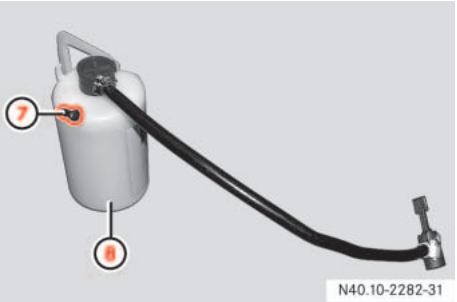

Tire sealant bottle for twin tires

⑦ Valve
⑧ Tire sealant bottle with hook, hose and angle brackets

▶ Shake tire sealant bottle ⑧.

▶ Unscrew and remove the cap from valve ⑦ on tire sealant bottle ⑧.

▶ Press angle bracket ② (▷ page 327) on hose ③ of the electric air pump all the way onto valve ⑦ of tire sealant bottle ⑧ and clamp it in place.

The following steps may vary depending on vehicle tires.

- Single tires (▷ page 328).
- Twin tires, inner wheel (▷ page 329)
- Twin tires, outer wheel (▷ page 331)

Single tire

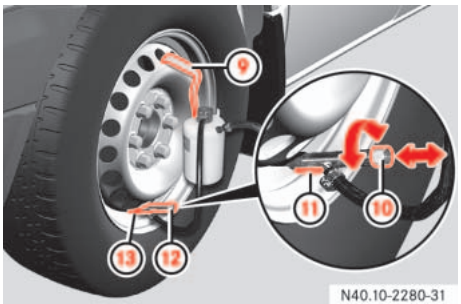

⑨ Hook
⑩ Knob
⑪ Lever
⑫ Valve core extractor
⑬ Tire valve

▶ Pull knob ⑩ out of valve core extractor ⑫ as far as the stop.

▶ Unscrew and remove the valve cap from tire valve ⑬ on the flat tire.

▶ Hook the tire sealant bottle into the upper vent hole in the wheel using hook ⑨.

▶ Keep lever ⑪ pressed, connect valve core extractor ⑫ firmly to tire valve ⑬ and release lever ⑪.

▶ Press knob ⑩ into the valve core of tire valve ⑬, turning it gently as you do so, until the shaft of valve core extractor ⑫ engages.

▶ Turn knob ⑩ counterclockwise until the valve core is unscrewed.

▶ Pull knob ⑩ out of valve core extractor ⑫ as far as the stop.

▶ This pulls the valve core into the valve core extractor and seals it against the valve core extractor stop.

▶ Make sure that the pressure release screw on pressure gauge ⑤ is closed.

▶ Connect connector ⑥ to the 12 V socket (12 V, 25 A, 300 watts) on the center console (▷ page 170).

! CAUTION

Do not connect the electric air pump connector to the cigarette lighter socket or another 12 V socket. These are not designed for operating the electric air pump.

▶ Start the engine (▷ page 111).

▶ Press **I** on electric air pump switch ①.

The electric air pump is switched on. The tire sealant is then pumped into the tire and the tire pressure is increased. Allow the electric air pump to run for at least 10 minutes until tire sealant bottle ⑧ is completely empty and a minimum tire pressure of 43.5 psi (3.0 bar) is achieved.

! CAUTION

Do not run the electric air pump for more than 20 minutes without a break, otherwise it may overheat.

The air pump can be used again once it has cooled down.

▶ Inflate the tire using the electric air pump until the recommended tire pressure (▷ page 210) is achieved.

▶ Then press **0** on electric air pump switch ①.

The electric air pump is switched off.

▶ Slide knob ⑩ quickly to the stop in valve core extractor ⑫.

▶ Turn knob ⑩ clockwise until the valve core is firmly screwed into tire valve ⑬.

ℹ

Do not pull the valve core extractor from the tire valve while the valve core is unscrewed from the tire valve. Tire sealant could otherwise escape onto your hands.

The tire sealant is water soluble. If tire sealant escapes, you can wash it away with water.

▶ Press lever ⑪ and remove valve core extractor ⑫ from tire valve ⑬.

▶ Screw the valve cap onto tire valve ⑬.

After filling with tire sealant (▷ page 333).

Twin tires, inner wheel

⑨ Valve extension
⑩ Valve core extractor

▶ Unscrew and remove the valve cap from valve extension ⑨ on the flat tire.

▶ Screw valve core extractor ⑩ clockwise all the way onto valve extension ⑨.

▶ Continue to screw valve core extractor ⑩ about half a rotation to loosen the valve extension.

▶ Unscrew and remove the valve extension and valve core extractor counterclockwise from tire valve.

▶ Unscrew and remove the valve extension from the valve core extractor.

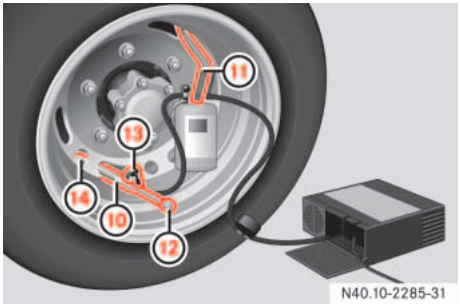

⑩ Valve core extractor
⑪ Hook
⑫ Knob
⑬ Angle bracket
⑭ Tire valve

- ▶ Pull knob ⑫ out of valve core extractor ⑩ as far as the stop.
- ▶ Screw valve core extractor ⑩ clockwise onto tire valve ⑭.
- ▶ Press knob ⑫ into the valve core of tire valve ⑭, turning it gently as you do so, until the shaft of valve core extractor ⑩ engages.
- ▶ Turn knob ⑫ counterclockwise until the valve core is unscrewed.
- ▶ Pull knob ⑫ out of valve core extractor ⑩ as far as the stop.
  This pulls the valve core into the valve core extractor and seals it against the valve core extractor stop.
- ▶ Hook tire sealant bottle ⑧ into the upper vent hole in the wheel using hook ⑪.
- ▶ Press angle bracket ⑬ on hose of tire sealant bottle ⑧ to the stop on the flange of valve extractor ⑩ and clamp it in place.
- ▶ Make sure that the pressure release screw on pressure gauge ⑤ is closed.
- ▶ Connect connector ⑥ to the 12 V socket (12 V, 25 A, 300 watts) on the center console (▷ page 170).

! CAUTION

Do not connect the electric air pump connector to the cigarette lighter socket or another 12 V socket. These are not designed for operating the electric air pump.

- ▶ Start the engine (▷ page 111).
- ▶ Press **I** on electric air pump switch ①.

  The electric air pump is switched on. The tire sealant is then pumped into the tire and the tire pressure is increased. Allow the electric air pump to run for at least 10 minutes until tire sealant bottle ⑧ is completely empty and a minimum tire pressure of 43.5 psi (3.0 bar) is achieved.

! CAUTION

Do not run the electric air pump for more than 20 minutes without a break, otherwise it may overheat.

The air pump can be used again once it has cooled down.

- ▶ Inflate the tire using the electric air pump until the recommended tire pressure (▷ page 210) is achieved.
- ▶ Then press **0** on electric air pump switch ①.

  The electric air pump is switched off.
- ▶ Slide knob ⑫ quickly to the stop in valve core extractor ⑩.

▶ Turn knob ⑫ clockwise until the valve core is firmly screwed into tire valve ⑭.

ℹ

Do not unscrew the valve core extractor from the tire valve while the valve core is unscrewed from the tire valve. Tire sealant could otherwise escape onto your hands.

The tire sealant is water soluble. If tire sealant escapes, you can wash it away with water.

▶ Pull knob ⑫ out of valve core extractor ⑩ as far as the stop.

▶ Unscrew valve core extractor ⑩ counterclockwise and remove it from tire valve ⑭ .

▶ Screw valve extension ⑨ onto tire valve ⑭ and tighten.

▶ Screw the valve cap onto valve extension ⑨.

After filling with tire sealant (▷ page 333).

Twin tires, outer wheel

The tire valve is on the inside of the outer wheel and should be horizontal on the left-hand side of the vehicle for the repair procedure.

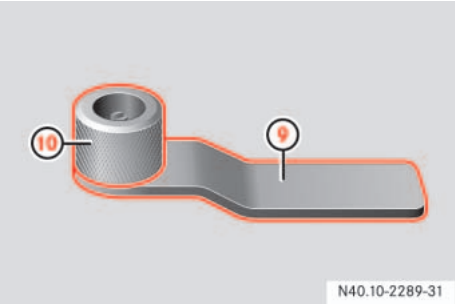

Valve tool with handle and turning workpiece

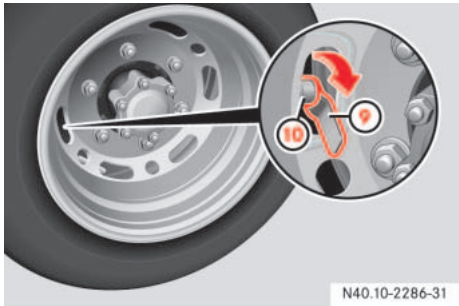

⑨ Handle
⑩ Turning workpiece

▶ Unscrew and remove the valve cap from tire valve ⑬ on the flat tire.

▶ Guide valve tool through the opening in the wheel and press it onto tire valve ⑪.

▶ Use one hand to hold handle ⑨ on valve tool firmly and use the other hand to unscrew and remove the valve core from the valve tool using turning workpiece ⑩.

▶ Remove the valve tool carefully through the opening in such a way that the valve core remains engaged in the valve tool.

▷▷

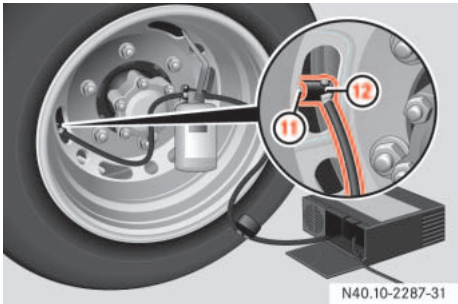

⑪ Tire valve
⑫ Angle bracket

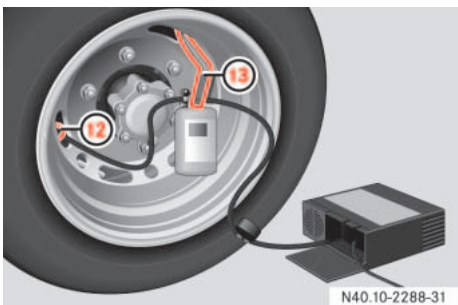

⑫ Angle bracket
⑬ Hook

▶ Hook tire sealant valve ⑧ into the upper vent hole in the wheel using hook ⑬.

▶ Press angle bracket ⑫ on hose of tire sealant bottle ⑧ (▷ page 327) to the stop on tire valve ⑪ and clamp it into place.

▶ Make sure that the pressure release screw on pressure gauge ⑤ is closed.

▶ Connect connector ⑥ to the 12 V socket (12 V, 25 A, 300 watts) on the center console (▷ page 170).

! CAUTION

Do not connect the electric air pump connector to the cigarette lighter socket or another 12 V socket. These are not designed for operating the electric air pump.

▶ Start the engine (▷ page 111).

▶ Press **I** on electric air pump switch ①.

The electric air pump is switched on. The tire sealant is then pumped into the tire and the tire pressure is increased.

Allow the electric air pump to run until tire sealant bottle ⑧ is completely empty.

▶ Press **0** on electric air pump switch ① after about 15 seconds.

▶ Unscrew angle bracket ⑫ from tire valve ⑪ and remove it.

▶ Screw in the valve core with the valve tool again and take out the valve tool through the opening.

! CAUTION

Do not run the electric air pump for more than 20 minutes without a break, otherwise it may overheat.

The air pump can be used again once it has cooled down.

▶ Press angle bracket ② (▷ page 327) on hose ③ of the electric air pump to the stop on tire valve ⑪ and clamp it into place.

▶ Press switch ① on the electric air pump to **I** and pump up the tire until the recommended tire pressure (▷ page 210) is achieved.

▶ Then press **0** on electric air pump switch ①.

The electric air pump is switched off.

ℹ

The tire sealant is water soluble. If tire sealant escapes, you can wash it away with water.

▶ Screw the valve cap onto tire valve ⑪.

▶ After filling with tire sealant (▷ page 333).

After filling with tire sealant

▶ Turn the pressure release screw on pressure gauge ⑤ counterclockwise and bleed the system.

▶ Turn the key to position **0** in the ignition lock (▷ page 67).

▶ Pull the electric air pump connector out of the 12 V socket.

▶ Store the electric air pump, tire sealant bottle ⑧ with valve core extractor ⑫ and, if used, the warning triangle and hazard warning lamps inside the vehicle.

▶ Unscrew and remove angle bracket ② from valve ⑦ on tire sealant bottle ⑧ and screw the valve cap onto the valve.

Warning ⚠

Do not exceed the maximum speed of 50 mph (80 km/h).

The "max. 50 mph (80 km/h)" sticker must be affixed within the driver's field of vision.

The vehicle's handling characteristics may be affected.

▶ Pull away immediately.

This enables the tire sealant to distribute inside the tire and create a more effective seal.

▶ Stop after about 3 minutes and check the tire pressure using the electric air pump, for example.

ℹ

You must connect the angle bracket on hose ③ of the electric air pump directly to the tire valve on the tire.

▶ Correct the tire pressure accordingly if it does not correspond to the recommended tire pressure (▷ page 210).

Increasing the tire pressure

▶ Switch on the electric air pump.

Reducing the tire pressure

▶ Open the pressure release screw on pressure gauge ⑤.

▶ Drive to the nearest workshop and have the tire repaired or replaced.

▶ Clean the valve core extractor using clean water.

▶ Have tire sealant bottle ⑧ replaced as soon as possible at an authorized Sprinter Dealer.

Warning

If the minimum tire pressure of 43.5 psi (3.0 bar) still cannot be achieved, the tire is too badly damaged.

Do not drive any further. Consult an authorized Sprinter Dealer which has the necessary specialist knowledge and tools to carry out the work required.

The manufacturer recommends that you use an authorized Sprinter Dealer for this purpose. In particular, work relevant to safety or on safety-related systems must be carried out at an authorized Sprinter Dealer.

Environmental note

Have the used Premium tire sealant disposed of at an authorized Sprinter Dealer.

CAUTION

Have the tire sealant bottle replaced every 8 years at an authorized Sprinter Dealer.

▼ Battery

Your vehicle may be equipped with two batteries, depending on the equipment version:

- Starter battery in the battery recess in the driver's footwell
- Auxiliary battery* in the engine compartment

ℹ

The auxiliary battery* in the engine compartment is not suitable for jump-starting operations. Only use the jump-starting connection in the engine compartment if you require jump-starting assistance or wish to provide jump-starting assistance (▷ page 340).

Warning ⚠

Observe the safety notes in the "Operation" section (▷ page 195).
Do not place any metal objects on the battery. Doing so can cause a short circuit.

Use only impact-resistant batteries with a central gas release cover to prevent corrosion damage and to protect occupants from caustic burns in the event of an accident.

Have the batteries removed at an authorized Sprinter Dealer which has the necessary specialist knowledge and tools to carry out the work required.
The manufacturer recommends that you use an authorized Sprinter Dealer for this purpose.

Disconnecting the battery

Warning ⚠

There is a risk of a short circuit if the positive terminal of the connected battery comes into contact with vehicle parts. The highly explosive gas mixture could ignite as a result. You and others could be seriously injured as a result.

- Do not place any metal objects or tools on the batteries.
- When disconnecting the batteries, always disconnect the negative terminals first and then the positive terminals.
- When reconnecting the batteries, always reconnect the positive terminals first and then the negative terminals.
- Do not loosen or disconnect the terminal clamps on the batteries while the engine is running.

! CAUTION

Switch off the engine and take the key out of the ignition lock before you loosen or disconnect the terminal clamps. You may otherwise destroy electronic components such as the alternator.

Always disconnect the starter battery in the battery recess in the driver's footwell first.

▶ Switch off all electrical consumers.

Disconnecting the starter battery

The starter battery is in the battery recess in the driver's footwell.

Removing/installing the floor covering in the driver's footwell

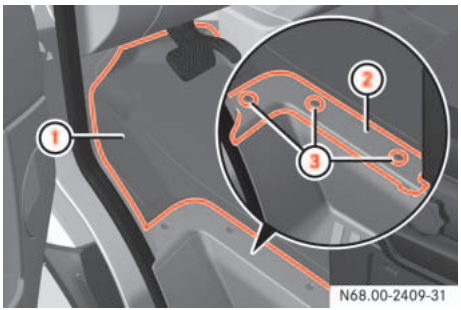

① Floor covering
② Trim
③ Securing screws

▶ **To remove:** undo screws ③ and remove trim ②.

▶ Remove floor covering ①.

▶ **To install:** place floor covering ① into the driver's footwell.

Warning

The movement of the pedals must not be obstructed. The vehicle's operating and road safety are otherwise jeopardized.

Make sure to push the floor covering under the plate metal bracket of the accelerator pedal. The floor covering may not slip between the bracket and the accelerator pedal.

Otherwise, you may not be able to fully depress the accelerator pedal, which will restrict the vehicle's acceleration capability, for example when passing another vehicle.

▶ Push floor covering ① under the plate metal bracket of the accelerator pedal and align it with the driver's seat base and the doorway

Make sure the floor covering does not obstruct the accelerator's range of movement.

▶ Position trim ② and screw screws ③ back in.

Removing the battery cover in the driver's footwell

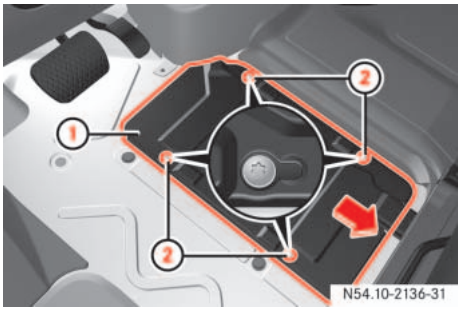

① Cover
② Securing screws

▶ Undo screws ② and slide cover ① in the direction of the arrow.

The screws must protrude beyond the recesses.

▶ Remove cover ① upward.

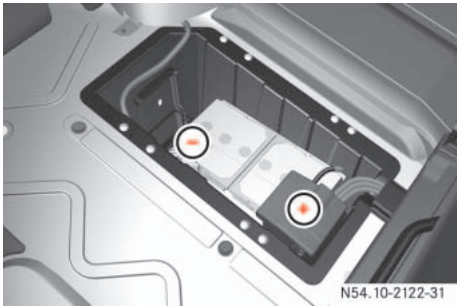

Starter battery in the driver's footwell

▶ Loosen the negative terminal of the battery first and remove it so that the negative terminal cannot come into contact with the pole terminal.

▶ Remove the cover from the positive terminal.

▶ Loosen the positive terminal and fold the positive terminal and the prefuse box up to the side.

Disconnecting the auxiliary battery*

▶ Open the hood (▷ page 185).

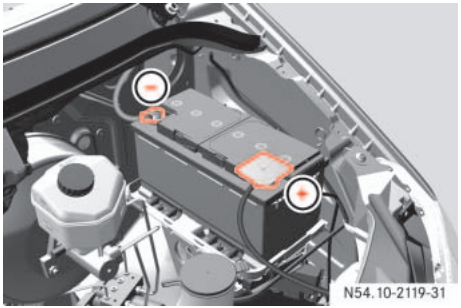

Auxiliary battery in the engine compartment

▶ Loosen the negative terminal of the battery first and remove it so that the negative terminal cannot come into contact with the pole terminal.

▶ Remove the cover from the positive terminal.

▶ Loosen the positive terminal and remove it.

Removing the battery

Starter battery

▶ Disconnect the battery (▷ page 337).

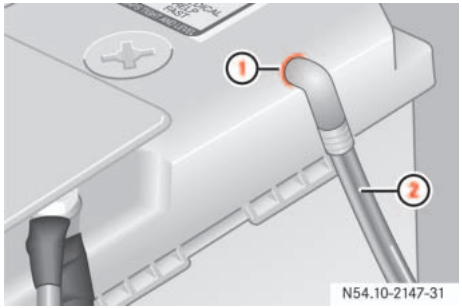

① Central gas release cover connection
② Vent hose with connection angle

▶ Pull vent hose with connection angle ② from connection ① of the gas release cover.

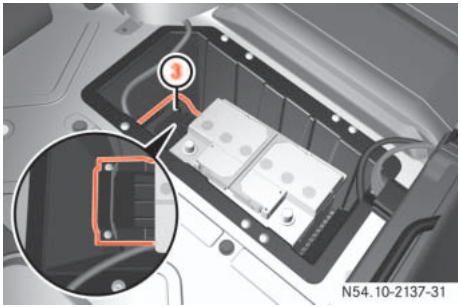

③ Retainer

▶ Loosen the bolts of retainer ③ preventing the battery from moving around.

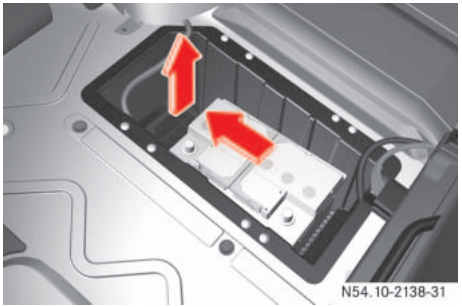

▶ Pull retainer ③ upward and slide the battery out of its anchorage in the direction of travel.

▶ Fold the clip upward and remove the battery from the battery recess.

Auxiliary battery* in the engine compartment

▶ Disconnect the battery (▷ page 337).

▶ Unscrew the bolts preventing the battery from moving around in the engine compartment.

▶ Remove the battery retainer and take out the battery.

Recharging the battery

- Recharge the removed battery. Observe the notes in the operating instructions for your battery charger.
- Reinstall the battery in the reverse order.

! CAUTION

Only charge the installed battery using a battery charger tested and approved by the manufacturer. These devices allow you to charge the battery while it is installed. The vehicle's electronics system may otherwise be damaged.

Warning ⚠

Only charge the battery in well-ventilated areas. As the battery is being charged, gases can escape and generate minor explosions, which can injure you and others and may cause damage to the paintwork or permit acid corrosion on the vehicle.

During the charge procedure, there is a risk of acid burns due to gases escaping from the battery. Do not, therefore, lean over the battery while it is being recharged.

ⓘ

It is also possible to charge the starter battery using the jump-starting connection point in the engine compartment (▷ page 340).

Reconnecting the battery

- Switch off all electrical consumers.
- Connect the positive terminal and secure the cover.
- Connect the negative terminal.

! CAUTION

Never swap the terminal clamps. Otherwise, the vehicle's electronics system may be damaged. After reconnecting the battery, you must reset the electric sliding door* (▷ page 57).

▼ Jump-starting

If the starter battery in the battery recess in the driver's footwell is discharged, the engine can be jump-started from another vehicle using jump leads.

For this purpose, the vehicle is equipped with a jump-starting connection point.

ℹ

The auxiliary battery* in the engine compartment is not suitable for jump-starting operations. Only use the jump-starting connection in the engine compartment if you require jump-starting assistance or wish to provide jump-starting assistance.

! CAUTION

Avoid repeated and lengthy starting attempts.

Never start the vehicle using a rapid battery charger.

Please note:

- Jump-starting must only be performed when the engine and catalytic converter are cold.
- Do not start the engine if the battery has frozen. Let the battery thaw out first.
- Only use a battery of the same rated voltage and of approximately the same capacity for jump-starting.
- Only use jumper cables of adequate cross-section with insulated battery terminal clamps.

Warning ⚠

Avoid creating sparks. Keep naked flames away from the battery, and do not smoke.

Comply with safety precautions and special protective measures when handling batteries (▷ page 195).

▶ Make sure that the two vehicles do not touch.

▶ Apply the handbrake or move the selector lever to position **P**.

▶ Switch off all electrical consumers.

▶ Switch on the battery isolating switch* if necessary (▷ page 197).

▶ Remove the key from the ignition lock.

▶ Open the hood (▷ page 185).

The jump-starting connection point is on the left-hand side of the air cleaner in the engine compartment when looking in the direction of travel.

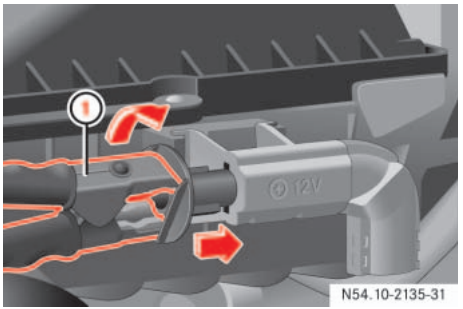

Jump-starting connection point

① Positive terminal clamp of jumper cable

▶ Remove the positive terminal cover from the donor battery.

▶ Connect positive terminal of donor battery ② to jump-starting connection point ① with the jumper cable. Start with the donor battery. ▷▷

▶ Using red positive terminal clamp ① of the jumper cable, slide the red protective cap of the jump-starting connection point back with a clockwise turn and connect the positive terminal clamp of the jumper cable to the positive terminal of the jump-starting connection point.

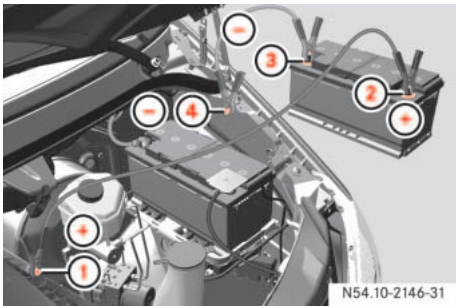

① Positive terminal of jump-starting connection point (under cover)
② Positive terminal of donor battery
③ Negative terminal of donor battery
④ Ground contact of own vehicle (negative terminal of your own battery)

ℹ

Do not connect the jumper cable to the auxiliary battery* in the engine compartment. This is not suitable for jump-starting operations.

▶ Run the other vehicle's engine at idling speed.

▶ Connect negative terminal ③ of the donor battery to ground contact ④ of your own vehicle.

Start with the donor battery.

▶ Start the engine.

▶ Disconnect the jumper cable from negative terminal ③ of the battery and ground contact ④ first, then from positive terminal ② of the battery and jump-starting connection point ①.

The red protective cap springs back to its initial position when the terminal clamp is removed from the jump-starting connection point.

▶ Have the battery checked at an authorized Sprinter Dealer.

Tow-starting

! CAUTION

Your vehicle is equipped with an automatic transmission. Do not tow-start your vehicle.

Warning ⚠

When tow-starting another vehicle, its weight should not be greater than the permissible gross weight of your vehicle.

Use a rigid towing bar and secure this only to the front towing eye (▷ page 342).

▼ Towing

Warning ⚠

Tow the vehicle using a rigid towing bar if:

- the engine is not running,
- there is a malfunction in the power supply or the vehicle's electrical system.

There is no power assistance for the steering and braking when the engine is not running. You must then use significantly greater force to steer the vehicle and brake.

Do not tow the vehicle if the key cannot be turned in the ignition lock. The steering is then locked and it will not be possible to steer the vehicle.

When towing another vehicle, its weight should not be greater than the permissible gross weight of your vehicle.

Comply with legal regulations when towing.

Having the vehicle carried away on a transporter or trailer is preferable to towing it away. We recommend the use of a rigid towing bar if towing is necessary.

Installing / removing the towing eye

The fixture for the front towing eye is located behind the cover in the bumper on the right-hand side when viewed in the direction of travel.

① Cover

Installing the towing eye

▶ Press bottom of cover ① in the direction of the arrow and remove it.

You will see the fixture for the towing eye.

▶ Take the towing eye and the wheel wrench from the vehicle tool kit (▷ page 300).

▶ Screw in the towing eye clockwise to the stop.

▶ Insert the wheel wrench handle into the towing eye and tighten.

Removing the towing eye

▶ Remove the wheel wrench from the vehicle tool kit.

▶ Insert the wheel wrench handle into the towing eye and turn the wrench counterclockwise.

▶ Unscrew the towing eye.

▶ Insert bottom of cover ① using the lug and press it in at the top until it engages. ▷▷

▶ Return the towing eye and the wheel wrench to the vehicle tool kit.

ℹ

Deactivate the automatic locking while driving function when towing (▷ page 64). You could otherwise become locked out when pushing or towing the vehicle.

▶ Switch on the ignition (▷ page 67).

▶ For a distance of up to 30 miles (50 km), move the selector lever to position **N**.

! CAUTION

Do not exceed a towing speed of 50 km / h, otherwise the transmission could be damaged.

▶ For a distance greater than 30 miles (50 km), remove the propeller shafts to the driven axles.

Towing out a vehicle that is stuck

Take great care when attempting to tow the vehicle free if its drive wheels have become embedded in loose earth or mud, particularly if the vehicle is loaded.

Tow the vehicle smoothly and straight-ahead. The chassis could otherwise be damaged.

Do not attempt to tow out the vehicle if a trailer is coupled up.

Where possible, tow the vehicle out backwards along the track made by the vehicle previously.

Towing the vehicle in the event of particular malfunctions

With transmission damage

▶ Always remove the propeller shafts to the driven axles.

! CAUTION

Use new self-securing nuts when installing the propeller shafts.

With front axle damage

▶ Turn the key to position **1** in the ignition lock(▷ page 67).

! CAUTION

The vehicle must not be towed with its front wheels raised and with the key in position **2** in the ignition lock.

Active brake intervention by ESP® or ASR could otherwise lock the wheels and damage the brake system.

In the event of a malfunction in the electrical system

If the battery is malfunctioning, the automatic transmission will be locked in position **P**. To shift the automatic transmission to position **N**, you must provide power to the vehicle's electrical system in the same way as jump-starting (▷ page 340).

Have the vehicle transported on a transporter or trailer.

Transporting the vehicle

The towing eye can be used to pull the vehicle onto a special transporter or trailer for transportation.

! CAUTION

Only secure the vehicle at the wheels / rims. Your vehicle could otherwise be damaged.

▶ Shift the transmission to neutral or move the selector lever to position **N**.

▼ Fuses

Warning ⚠

Only use fuses of the amperage recommended by the manufacturer. Any authorized Sprinter Dealer will be happy to advise you.

Do not attempt to repair or bridge blown fuses.

Have the cause determined and rectified at a qualified specialist workshop, e.g. an authorized Sprinter Dealer.

The fuses and relays for the standard equipment are in the main fuse box in the footwell on the left-hand side of the vehicle.

ℹ

Additional fuses and relays for the optional equipment are in the fuse box in the driver's seat.

▶ Switch off the ignition and electrical consumers before replacing fuses.

Main fuse box

The fuse box is in the footwell on the left-hand side of the vehicle.

ℹ

The fuse allocation chart for the fuse boxes is in the vehicle document wallet in the glove box and names all the numbered fuses.

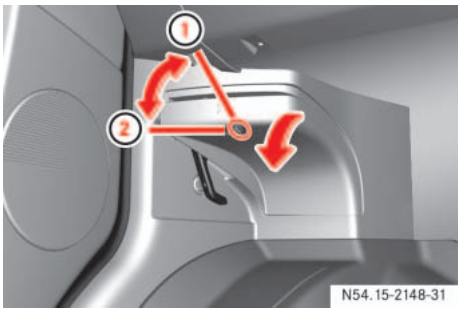

① Unlocked
② Locked

▶ **To open:** release ① the quick-release lock and remove the cover.

▶ **To close:** attach the cover at the bottom and fold it closed.

The cover must engage.

▶ Lock ② the quick-release lock.

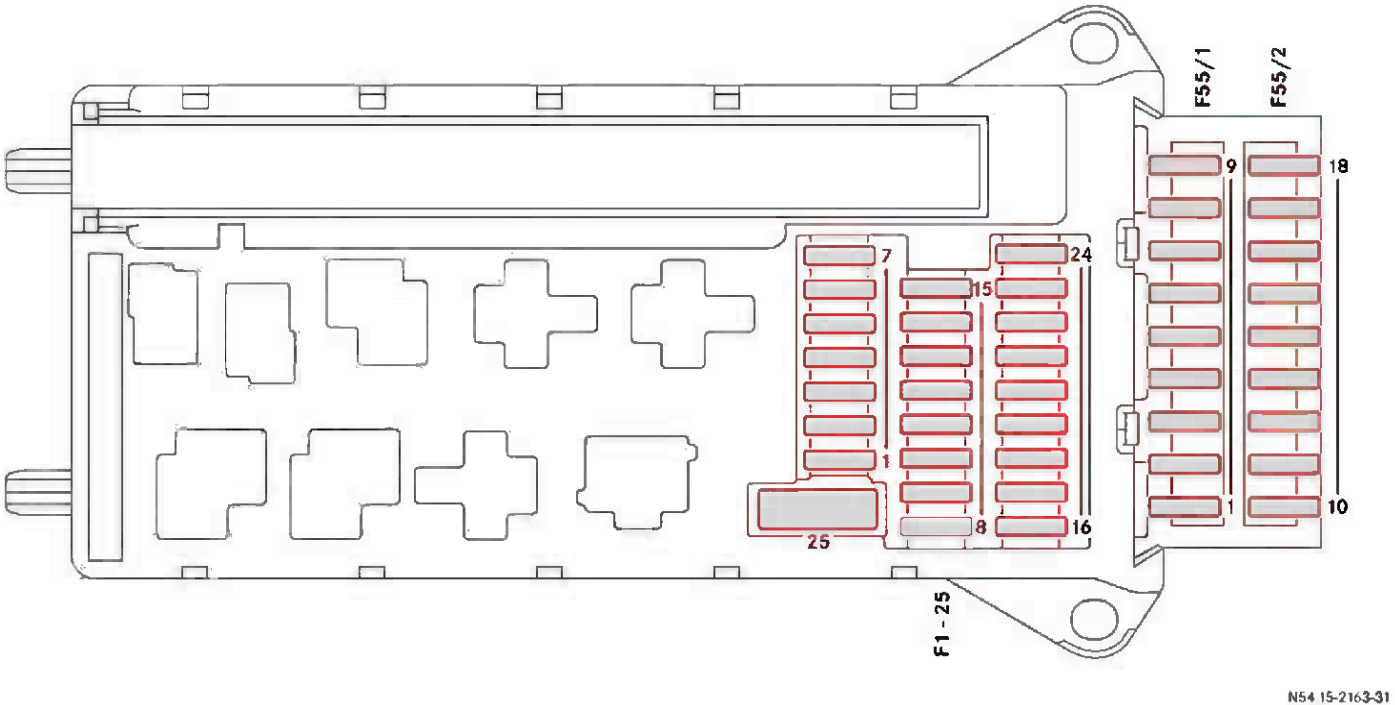
F55/1
F55/2
9
18
1
10
7
24
15
1
8
16
25
F1 - 25
N54 15-2163-31

No.	Consumer	Amp.
1	Horn	15 A
2	Electric steering lock ESTL (electronic ignition switch EIS)	25 A
3	Terminal 30 Z, vehicles with gasoline engine/electronic ignition switch EIS/instrument cluster	10 A
4	Light switch/center console switch unit	5 A
5	Windshield wipers	30 A
6	Fuel pump	15 A
7	MRM (jacket tube module)	5 A
8	Terminal 87 (2)	20 A
9	Terminal 87 (3)	20 A
10	Terminal 87 (4)	10 A
11	Terminal 15 R vehicle	15 A
12	Airbag control unit	10 A
13	Cigarette lighter/glove box lighting/radio*	15 A
14	Diagnostic socket/light switch/instrument cluster	5 A

No.	Consumer	Amp.
15	Front heating system	5 A
16	Terminal 87 (1)	10 A
17	Airbag control unit	10 A
18	Terminal 15 vehicle, brake lamp switch	7.5 A
19	Interior lights	7.5 A
20	Power window co-driver's side/terminal 30/2 signal acquisition and actuation module SAM	25 A
21	Engine control unit	5 A
22	Antilock Brake System (ABS)	5 A
23	Starter motor	25 A
24	Diesel engine components	10 A
25	12V socket on the bottom of the center console	25 A

Fuse block F55/1

No.	Consumer	Amp.
1	Control panel, left door	25 A
2	Diagnostic socket	10 A
3	Brake system (valves)	25 A
4	Brake system (delivery pump)	40 A
5	Terminal 87 (5), vehicles with gasoline engine	7.5 A
6	Terminal 87 (6), vehicles with gasoline engine	7.5 A
7	Headlamp cleaning system*	30 A
8	Anti-theft alarm system (ATA)	15 A
9	Unassigned	–

Fuse block F55/2

No.	Consumer	Amp.
10	Radio*	15 A
11	Telephone*	7.5 A
12	Front blowers	30 A
13	Unassigned	–
14	Seat heating*/center console switch unit	30 A

No.	Consumer	Amp.
15	Non MB-body electrics	10 A
16	Heating, rear heating/ Tempmatic (air-conditioning system), front/CD-player*	10 A
17	Motion detector*/con-venience interior lighting*/ satellite radio*	10 A
18	Air conditioning in the rear*	7.5 A

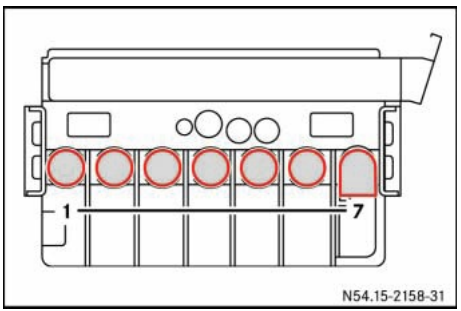

Preliminary fuse box in the battery recess in the driver's footwell F59

No.	Consumer	Amp.
1	Pre-glow relay/secondary air pump	80/40 A
2	Engine fan air-conditio-ning system	80 A
3	Signal acquisition and ac-tuation module SAM/fuse and relay block SRB	80 A
4	Auxiliary battery* in the engine compartment	150 A
5	Terminal 30 fuse boxes, si-gnal acquisition and actu-ation module SAM/fuse and relay block SRB	150 A
6	Connecting point in driver's seat base	Brücke
7	Heater booster (PTC)	150 A

Fuse box in the driver's seat

The fuse box is located in the base of the driver's seat on the outboard side.

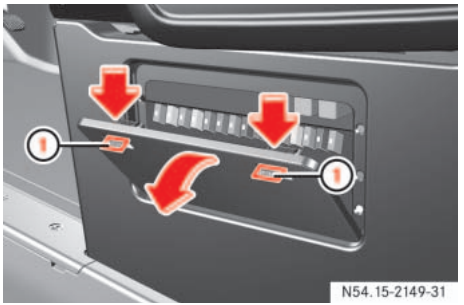

① Latching springs

▶ **To open:** adjust the seat to its highest position (▷ page 69).

▶ Press both latching springs ① down and remove the cover.

▶ **To close:** attach the cover at the bot-tom and fold it closed.

The cover must engage.

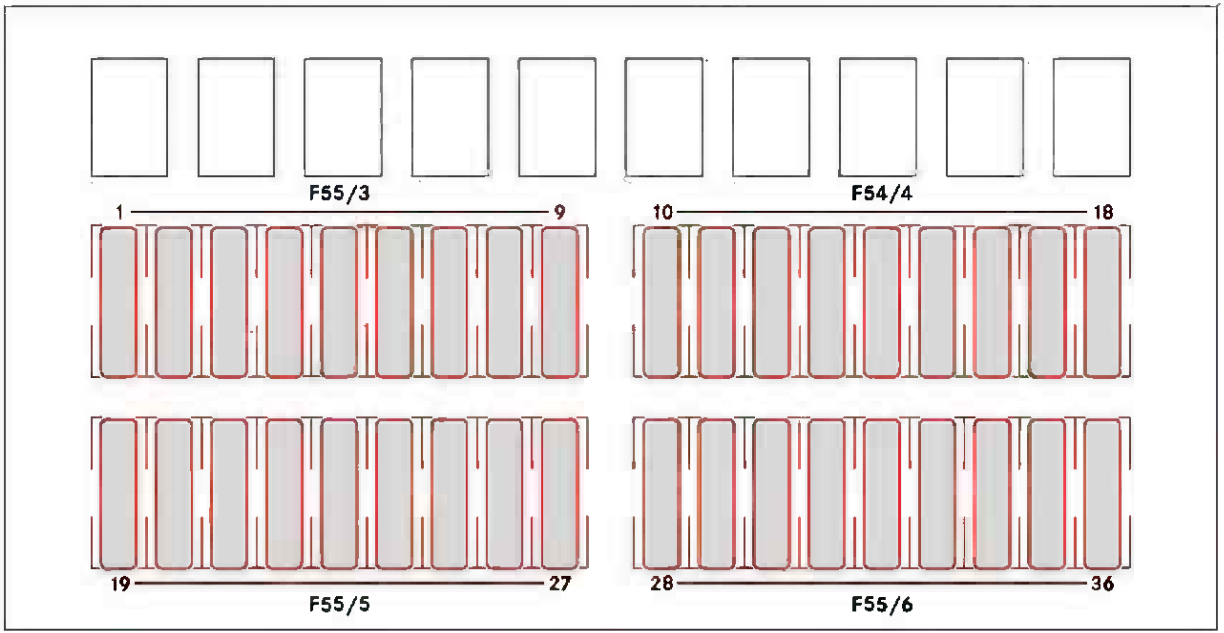

N54:15-2157-31

No.	Consumer	Amp.
1	Mirror adjustment*	5 A
2	Rear window wiper*	30 A
3	Reversing camera*/ telephone*	5 A
4	Operating speed governor (ADR)/PTO/trailer connection unit AAG	7.5 A
5	Terminal 87 electronic transmission control ETC, control unit	10 A
6	Unassigned	–
7	Electronic selector level module ESM	7.5/15 A
8	Terminal 15 body builder, drop side/3-way tipper	10 A
9	Roof ventilator*/audio signal equipment*	15 A
10	Terminal 30, tapping wire body builder	25 A
11	Terminal 15, tapping wire body builder	15 A
12	D+, tapping wire body builder	10 A

No.	Consumer	Amp.
13	Auxiliary indication modul 1	10 A
14	Trailer socket*	20 A
15	Trailer recognition device*	25 A
16	Tir pressure monitoring system (TPMS)*/ Parktronic system (PTS)*	7.5 A
17	PSM control unit*	25 A
18	PSM control unit*	25 A
19	Overhead control panel*/ sliding sunroof*	5/25 A
20	Clearance lamps*	7.5 A
21	Rear window heating*	30/15 A
22	Rear window heating* 2	15 A
23	12V socket* rear left, load/passenger compart-ment	15 A
24	12V socket driver's seat base	15 A
25	12V socket rear right, load/passenger compart-ment/Auxiliary heating* blower speed 1	15 A

No.	Consumer	Amp.
26	Auxiliary heating*	25 A
27	Heater booster*	25/20 A
28	Air conditioning in the rear*	30 A
29	Unassigned	–
30	Unassigned	–
31	Blower unit, rear heating*	30 A
32	Unassigned	–
33	Electric sliding door*, right	30 A
34	Electric sliding door*, left	30 A
35	Brake booster*	30 A
36	Unassigned	–

Genuine Sprinter parts 352

Vehicle electronics 354

Service products and capacities 355

Rims and tires 367

Tire inflation pressure 369

Lashing points and carrier systems 371

Vehicle identification labels 373

▼ Genuine Sprinter parts

The “Technical data” section contains important technical data regarding your vehicle.

You will find other vehicle-specific and equipment-dependent technical data, such as:

- engine power output data
- speeds
- vehicle dimensions
- vehicle weights

in your vehicle documents.

Make sure that spare parts are suitable for your vehicle. Parts that constitute a modification to the vehicle by:

- changing the type of vehicle approved in the general operating permit,
- creating a risk to road users or
- having an adverse effect on the vehicle’s emissions and noise levels,

will in many countries invalidate the general operating permit. The use of non-approved parts could have a detrimental effect on road safety.

Every authorized Sprinter Dealer maintains a stock of genuine sprinter parts for maintenance and repair work.

Over 6000 retailers around the world guarantee that you can be supplied with genuine sprinter parts wherever you are. Over 300,000 different parts and assemblies, including parts for older vehicle models, are distributed from a central parts warehouse using an optimally tuned logistics concept.

Genuine sprinter parts are subjected to the most stringent quality inspections and will ensure that the vehicle is maintained at a high level of operating efficiency and safety, and that it maintains its value. Each part has been specifically designed and manufactured or selected and approved for use in Sprinter vehicles.

It is therefore best to use only genuine sprinter parts.

For cost-effective repairs in accordance with sound recycling principles, the use of non-genuine parts and accessories not authorized by the manufacturer could damage the vehicle or compromise its durability or safety.

Environmental note

The manufacturer also supplies reconditioned assemblies and parts for cost-effective repairs in accordance with recycling principles. These parts have the same quality and warranty as new parts.

You can obtain further information about approved conversion parts and accessories and permitted technical modifications from your authorized Sprinter Dealer. Always quote the vehicle identification number and the engine number when ordering genuine parts. You will find these numbers on your vehicle's identification labels (▷ page 373) and also on the vehicle data card for certain vehicles.

▼ Vehicle electronics

Tampering with the engine electronics

Work on the engine electronics and all associated parts such as control units, sensors and connector leads should only be performed at an authorized Sprinter Dealer. Vehicle parts could otherwise wear more quickly and the vehicle's warranty or general operating permit could be invalidated.

Warning

For safety reasons and to avoid invalidating the general operating permit, always have work on the engine electronics and associated parts performed at an authorized Sprinter Dealer which has the necessary specialist knowledge and tools to carry out the work required.

The manufacturer recommends that you use an authorized Sprinter Dealer for this purpose. In particular, work relevant to safety or on safety-related systems must be carried out at an authorized Sprinter Dealer.

Retrofitting electrical / electronic equipment

Electrical and electronic equipment can jeopardize the operational safety of your vehicle. If equipment of this kind is retrofitted, it must be type-approved and must bear the **e** mark.

If you wish to install telephones or two-way radios in the vehicle, you must obtain formal approval.

The manufacturer recommends that you consult an authorized Sprinter Dealer.

You may retrofit telephones and two-way radios provided that the maximum transmission outputs listed below are not exceeded. Always have this type of equipment professionally installed with an exterior antenna which has been installed in such a way as to be reflection-free.

Frequency range	Maximum transmission output
Short wave (< 50 MHz)	100 W
4 m waveband	20 W
2 m waveband	50 W
70 cm waveband	35 W
25 cm waveband	10 W

If electrical or electronic equipment which does not fulfill these conditions is retrofitted, the vehicle's general operating permit may be invalidated.

▼ Service products and capacities

Service products are:

- fuels
- lubricants (e.g. engine oils, transmission oils, hydraulic fluids, greases)
- antifreeze additives, coolant
- brake fluid

Service products are tested for suitability in our assemblies. Approved service products meet the highest quality standards. For this reason, only use service products that have been approved for your vehicle. This is an important condition for warranty claims to be upheld. Information about approved service products is available from all authorized Sprinter Dealers.

You will find details about windshield washer fluid in the “Operation” section (▷ page 193).

It is neither necessary nor permissible to mix special additives with approved service products (except for approved fuel additives). Therefore, special additives must not be mixed with fuels or lubricants. The properties of the service products could be adversely affected by special additives and result in damage to the assemblies.

The vehicle operator is responsible at all times for any use of special additives. The use of special additives may result in a limitation or an invalidation of your warranty entitlement.

Warning

Failure to use fluids and lubricants which meet the standards and specifications described in this booklet or failure to adhere to the specified replacement intervals may result in damage to safety/ and/or emissions-related systems of your vehicle, such as the brake system, which could cause an accident and/or serious injury to you and others.

Use only fluids and lubricants meeting the standards and specifications and adhere to specified replacement intervals.

! CAUTION

Damage caused by the use of non-approved service products is not covered by the Sprinter warranty.

Warning

Service products constitute a health hazard. They contain toxic and highly corrosive constituents.

For this reason, bear the following points in mind to avoid injury to yourself and others:

- Do not inhale fumes. Make sure that enclosed spaces are adequately ventilated to prevent poisoning.
- Service products must not come into contact with the skin, eyes or clothing. If contact is made with a service product, clean the affected areas of skin with water and soap to prevent burns and other injuries.

▷▷

- Rinse thoroughly with plenty of water in case of contact with eyes. Consult a doctor immediately if a service product is swallowed.
- Change out of clothing soiled with service products immediately to avoid the risk of fire and other injuries.
- Fire, naked flames and smoking are therefore prohibited when handling service products due to their highly flammable nature.
- Keep service products out of the reach of children.
- You must observe the notes on danger concerning the risk of poisoning, acid burns and fire on the service product containers.

Environmental note

Dispose of service products in an environmentally responsible manner.

Engine oils

! CAUTION

Engine oils are labeled on the container with various ACEA (Association des Constructeurs Européens d'Automobiles) and/or API (American Petroleum Institute) designations of quality. DaimlerChrysler Vans LLC recommends the use of MB approved engine oils listed in the Mercedes-Benz oil specification sheets MB 229.3, 229.5 and 229.51 which also meet ACEA and/or API classifications listed on the following chart. Only engine oils (including synthetic) with any of the following classification grades, or combinations thereof, are approved.

Valid Mercedes-Benz oil specification sheets:

Engine	MB sheet
Gasoline M272	229.3, 229.31 229.5, 229.51
Diesel OM642	228.51, 229.31, 229.51

Always refer to the following viscosity chart for the proper viscosity grade based on ambient temperature. Select oil viscosity according to the lowest air temperature expected before the next oil change.

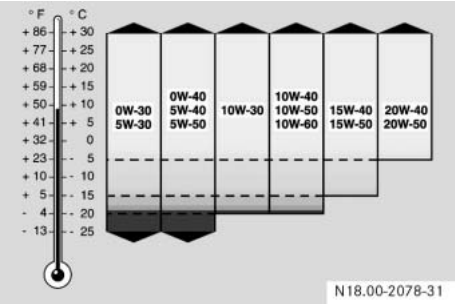

This chart supersedes ALL previously published viscosity charts.

For further information contact your authorized Sprinter Dealer.

The following oils have been determined to meet the DaimlerChrysler requirements as shown below:

MB approved engine oil	SAE	MB sheet
Castrol Syntec 5W-40	5W-40	229.3
Castrol Syntec 0W-30 European Formula	0W-30	229.5
Chevron Supreme Synthetic Motor Oil SAE 5W-40	5W-40	229.31
Fuchs Titan Cargo Maxx SAE 10W-40	10W-40	228.51
Fuchs Titan GT1 SAE 5W-30	5W-30	229.51
Fuchs Titan Supersyn Longlife SAE 5W-30	5W-30	229.3 229.5
Havoline Ultra S 5W-30	5W-30	229.31
Havoline Ultra S 5W-40	5W-40	229.31
High Star	5W-30	229.3
Lotos Economic SL/CF	5W-30	229.3
Lotos Syntetic Auto Diesel CF	5W-40	229.3

The following oils have been determined to meet the DaimlerChrysler requirements as shown below:

MB approved engine oil	SAE	MB sheet
Lotos Syntetic SL/SJ/CF/CD	5W-40	229.3
Mobil 1 0W-40	0W-40	229.3 229.5
Mobil 1 5W-50	5W-50	229.3
Mobil 1 ESP Formula MB	5W-40	229.51
Mopar Part No 68001334AA	5W-30	229.51
Pennzoil Platinum Synthetic Ultra Diesel	5W-30	229.51
Pennzoil European Formula Ultra	5W-30	229.5
Pennzoil Platinum European Formula	5W-40	229.3
Pento High Performance 5W-30 LA	5W-30	229.31
Pento High Performance 5W-40	5W-40	229.3
Pento High Performance 5W-40 LA	5W-40	229.31

The following oils have been determined to meet the DaimlerChrysler requirements as shown below:

MB approved engine oil	SAE	MB sheet
Pentosin Diesel 10W-40 LA	10W-40	228.51
Pentospeed	0W-30	229.3
Pentospeed 0W-30 VS*	0W-30	229.3 229.5
Q Diesel Plus	5W-30	229.51
Q European Engine	5W-40	229.3
Q European Engine Ultra	5W-30	229.5
Quaker State Euro Synthetic Ultra Diesel	5W-30	229.51
Shell Helix Ultra AX	5W-30	229.51
Shell Rimula Signia	10W-40	228.51
Texaco Havoline Synthetic Motor Oil SAE 5W-40	5W-40	229.31
Valvoline SynPower MST	5W-30	229.51

Adding engine oil

! CAUTION

Diesel engine:

Never use any amount of engine oil for the diesel engine that does not conform to MB 229.51 or MB 229.31 specifications. Otherwise the diesel particle filter (DPF) could be damaged.

If the above specified engine oils are not available, you may also use engine oils conforming to MB 228.5, 229.3 and 229.5 specifications. You should add no more than 1 qt (1 l) of these engine oils, however.

Fuels

Warning

Gasoline is highly flammable and poisonous. It burns violently and can cause serious injury. Whenever you are around gasoline, avoid inhaling fumes and skin contact, extinguish all smoking materials. Never allow sparks, flame or smoking materials near gasoline! Direct skin contact with fuels and the inhalation of fuel vapors are damaging to health.

Switch off the engine before refueling.

! CAUTION

If you are refueling the vehicle from drums or canisters, you should filter the fuel before adding it to the tank. This will prevent malfunctions in the fuel system caused by contaminated fuel.

Fuels for gasoline engines

Premium unleaded gasoline

! CAUTION

To maintain the engine's durability and performance, premium unleaded gasoline must be used. If premium unleaded is not available and low octane fuel is used, follow these precautions:

- Have the fuel tank only partially filled with unleaded regular and fill up with premium unleaded as soon as possible.
- Avoid full throttle driving and abrupt acceleration.
- Do not exceed an engine speed of 3000 rpm if the vehicle is loaded with a light load, such as two persons and no cargo.
- Do not exceed $^{2}/_{3}$ of maximum accelerator pedal position if the vehicle is fully loaded or operating in mountainous terrain.

Fuel requirements

Only use premium unleaded fuel:

- The octane number (posted at the pump) must be 91 min. It is an average of both the Research (R) octane number and the Motor (M) octane number: (R+M) / 2). This is also known as the ANTI-KNOCK INDEX.

Unleaded gasoline containing oxygenates such as ethanol, IPA, IBA and TBA can be used provided the ratio of any one of these oxygenates to gasoline does not exceed 10%; MTBE not to exceed 15%.

The ratio of methanol to gasoline must not exceed 3% plus additional cosolvents.

Using mixtures of ethanol and methanol is not allowed. Gasohol, which contains 10% ethanol and 90% unleaded gasoline, can be used.

These blends must also meet all other fuel requirements, such as resistance to spark knock, boiling range, vapor pressure, etc.

! CAUTION

The following may lead to increased wear or engine damage:

- Using gasoline that does not meet the specifications mentioned above
- The use of non-approved special additives

Fuels for diesel engines

! CAUTION

Marine diesel fuel, bio diesel fuel, heating oil or the like must not be used.

Do not blend diesel fuel with marine diesel fuel, bio diesel fuel or heating oil. The use of such non-approved fuels or blending diesel fuel may result in malfunction or cause engine damage. Damage or malfunctions resulting from poor fuel quality or from blending specific fuel additives are not covered by the Sprinter warranty.

Fuel requirements

Only use commercially available vehicular ULTRA-LOW SULFUR HIGHWAY DIESEL FUEL (15 ppm SULFUR MAXIMUM).

DaimlerChrysler USA now approves the use of B5 bio diesel (standard diesel with a maximum of up to 5% Bio diesel content) in the Sprinter CRD diesel engine.

Information on diesel quality can normally be found on the fuel pump.

! CAUTION

As bio diesel can be refined from a variety of raw materials resulting in widely varying properties, the only approved bio diesel content is one that meets ASTM D6751 specification. It must also have the necessary oxidation stability (min. 6h, proved with EN 14112 method) to prevent damages to the system from deposits and/or corrosion.

If the B5 Bio diesel blend is not sufficiently labeled to clearly indicate that it meets the above standards, do not use it.

Diesel fuels containing a higher percentage of Bio diesel content will cause damage to your engine and are not approved.

Damage or malfunctions resulting from poor fuel quality are not covered by the Sprinter Warranty.

! CAUTION

The exhaust aftertreatment device (DPF) will be seriously damaged if you use

- LOW SULFUR HIGHWAY DIESEL FUEL (500 ppm SULFUR MAXIMUM)
- any other diesel fuel with a sulfur content of above 15 ppm
- any other diesel fuel with a Bio diesel content of above 5%
- any other diesel fuel with a Bio diesel content up to 5%, which does not meet the above mentioned standards

For more information on diesel fuels contact your authorized Sprinter Dealer.

i

Commercially available vehicular ULTRA-LOW SULFUR HIGHWAY DIESEL FUEL may contain up to 5% bio diesel. This proportion will not have an effect on performance and wear.

DaimlerChrysler USA now approves the use of B5 bio diesel (standard diesel with a maximum of up to 5% bio diesel content) in all Common Rail Injection Diesel “CDI-engines.” Diesel fuels containing a higher percentage of bio diesel content will cause damage to your engine and are not approved.

As bio diesel can be refined from a variety of raw materials resulting in widely varying properties, the only approved bio diesel content is one that meets ASTM D6751 specification. It must also have the necessary oxidation stability (min. 6h, proved with EN 14112 method) to prevent damages to the system from deposits and/or corrosion.

Please ask your service station for further information. If the B5 bio diesel blend is not sufficiently labeled to clearly indicate that it meets the above standards, please do not use it. The DaimlerChrysler limited warranty does not cover damage caused by the use of fuels not meeting DaimlerChrysler approved fuel standards.

For more information on diesel fuels contact your authorized Sprinter Dealer.

Diesel fuels for use at very low temperatures

Only use commercially available vehicular ULTRA-LOW SULFUR DIESEL FUEL (15 ppm SULFUR MAXIMUM).

To prevent malfunctions, diesel fuel with improved cold flow characteristics is offered in the winter months. Check with your fuel retailer.

At very low temperatures the fluidity of No. 2 diesel fuel may become insufficient due to paraffin separation. For this reason the vehicle comes equipped with a fuel preheater. It permits trouble-free engine operation to a temperature of approximately 14 °F (–10 °C).

At temperatures below 14 °F (–10 °C) a certain quantity of fuel flow improver may be added. These substances may only be mixed within the vehicle's fuel tank.

Engine power may drop according to the proportion of fuel flow improver. For this reason, keep the percentage of fuel flow improver to the minimum necessitated by the ambient temperature.

! CAUTION

Do not fill the tank with gasoline.

Do not mix diesel fuel with gasoline or kerosene. The fuel system and engine will otherwise be damaged, which is not covered by the Sprinter warranty.

Adding kerosene to diesel fuel is not recommended even at low temperatures.

Do not blend other specific fuel additives with diesel fuel except for fuel flow improver. They only result in unnecessary cost, and may be harmful to the engine operation.

Warning

Under no circumstances should gasoline be mixed with diesel fuel.

Due to the high pressure and high temperature in the injection system, there is a risk of fire and explosion.

In addition, there is a risk of engine damage.

Always follow basic safety rules when working with any combustible material.

Flow improvers

The effectiveness of flow improvers cannot be guaranteed with all fuels. Observe the mixing ratio and comply with the handling instructions given from the manufacturer.

Coolants, lubricants, etc.

	Service interval	Product name/product number	MB sheet	MS-No.[1]
Air conditioning The air conditioning system of your vehicle contains R-134a, a refrigerant that does not deplete the ozone layer in the upper atmosphere.				
Refrigerant R-134a	–	Refrigerant R-134a	361.0	
Automatic transmission				
Automatic transmission fluid	10 years 60,000 mi (96,000 km)	MOPAR® 05127382AB Shell ATF 3403 Shell ATF 3353	 236.10 236.12	
Brakes Use brake fluid approved for DaimlerChrysler standard MB 331.0 and/or DaimlerChrysler material standard MS-9971, brake fluid certified to DOT 4 Plus standards, that also maintains a minimum dry boiling point (ERBP) of 500 °F (260 °C), a minimum wet boiling point (WERBP) of 356 °F (180 °C) and a maximum viscosity of 1500 mm^2/s, conforming to FMVSS 116 and ISO 4925.				
Brake fluid	2 years[2]	Intac B026E Dry boiling point: 500°F (260°C) Wet boiling point: 356°F (180°C) MOPAR® MS-9971 Part No. 04549625AC or equivalent	331.0	9971

1 DaimlerChrysler Material Standard-No.

2 Over the course of a brake fluid's service life, its boiling point falls due to the continuous absorption of moisture from the atmosphere. If the boiling point of the brake fluid is too low, vapor pockets may form in the brake system when the brakes are applied hard (e.g. when driving on long downhill stretches). This has a detrimental effect on braking efficiency, which could increase the stopping distance. This increases the risk of an accident. Have the brake fluid renewed every 2 years.

	Service interval	Product name/product number	MB sheet	MS-No.[1]
Engine cooling system The use of aluminum components in Sprinter engines requires that anticorrosive/antifreeze specifically formulated to protect aluminum parts be used. The factory-approved service products are suitable for Sprinter engines and can be mixed with the original anticorrosion/antifreeze filled at factory. The cooling system design and anticorrosion/antifreeze agent used stipulate the replacement interval for the coolant solution in your vehicle. Please observe the replacement interval specified in the Service Booklet for your vehicle. Failure to use MB 325.0 anticorrosion/antifreeze and/or equivalent to DaimlerChrysler material standard MS-9769 and/or failure to adhere to the specified replacement interval may result in a significantly shortened service life. For coolant composition and water quality, contact your authorized Sprinter Dealer.				
Coolant, anticorrosion/antifreeze fluid	1st interval: 15 years or 180,000 mi (288,000 km)[2] Subsequent intervals: 5 years or 100,000 mi (160,000 km)	EURO Peak Coolant/Antifreeze OLD WORLD INDUSTRIES	325.0	
		Zerex G05, The Valvoline Company	325.0	
		Zerex G48, The Valvoline Company	325.0	
		Glysantin G05, BASF AG MOPAR® Part No. 05066386AA, or equivalent	325.0	
Engine				
Engine oil for gasoline engine M272	1 year or 10,000 mi (16,000 km)	see “Engine oils” (page 350)	229.31, 229.3 229.51, 229.5	
Engine oil for diesel engine OM642	2 years or 10,000 mi (16,000 km)	See “Engine oils” (page 350)	228.51 229.31 229.51	

1 DaimlerChrysler Material Standard-No.
2 Follow the interval, time or mileage, that occurs first.

	Service interval	Product name/product number	MB sheet	MS-No.[1]
Power steering Power steering, no fluid service required.				
Power steering fluid	–	Mobil ATF+4, Exxon Mobil Corporation, or equivalent	236.3	9602
		MOPAR® Part No. 05013457AA, or equivalent	–	
Rear axle				
Gear oil	10 years or 180,000 mi (288,000 km)[2]	BP Energear Hyep DC 80W-90 Mobil Delvac Synthetic Gear Oil 75W-90	235.20 235.8	8985
		MOPAR® Part No. 04874469[3]	–	

1 DaimlerChrysler Material Standard-No.
2 Follow the interval, time or mileage, that occurs first.
3 Synthetic automotive gear lubricant without fricition modifier.

Capacities

Vehicle	Engine with oil filter	Tank		Cooling system	Windshield washer / headlamp cleaning system
	Engine oil	Capacity	Including reserve fuel	Coolant[1]	Water with MB windshield washer fluid
2500 CRD, 3500 CRD	13.21 US qt. (12.5 l)	25.0 US gal (100 l)	5.3 US gal (20 l)	10.75 US qt. (10.0 l)	approx. 7.40 US qt. (7.0 l)
2500, 3500	10.04 US qt. (9.5 l)	25.0 US gal (100 l)	5.3 US gal (20 l)	7.40 US qt. (7.0 l)	approx. 7.40 US qt. (7.0 l)

1 Do not exceed a proportion of 55% by volume (antifreeze protection down to about -45 °C) as the heat dissipation properties deteriorate at higher concentrations. Observe the Mercedes-Benz Specifications for Service Products, Sheet 310.

Fuel consumption

Environmental note

A vehicle's CO_2 emissions and fuel consumption depend on:

- efficient use of fuel by the engine
- the style of driving adopted
- other non-technical factors such as environmental influences or road conditions

The vehicle will use more fuel than usual in the following conditions:

- at very low temperatures
- in urban traffic
- on short trips
- when towing a trailer
- when driving with a heavy load
- in mountainous terrain

▼ Rims and tires

! CAUTION

Only use tires which have been tested and approved for your Sprinter vehicle by the vehicle manufacturer. Tires approved by the vehicle manufacturer are developed to provide the best possible performance in conjunction with the driving safety systems on your Sprinter vehicle such as ABS, BAS, ASR or ESP®.

Using tires other than those approved by the vehicle manufacturer may result in damage that is not covered by the Sprinter warranty.

Using tires other than those approved by the vehicle manufacturer can have detrimental effects, such as

- poor handling characteristics
- increased noise
- increased fuel consumption

Moreover, tires and rims not approved by the vehicle manufacturer may, under load, exhibit dimensional variations and different tire deformation characteristics that could cause them to come into contact with the vehicle body or axle parts. Damage to the tires or the vehicle may be the result.

Warning ⚠

Loose wheel nuts or bolts could cause the vehicle to lose a wheel while it is in motion. This would jeopardize the operating and road safety of the vehicle. You could lose control of the vehicle as a result, cause an accident an injure yourself or others.

If a wheel was replaced or new wheel nuts are used, the wheel bolts or wheel nuts must be retightened to the specified tightening torque after 30 miles (50 km).

If new or repainted wheels are mounted, the wheel bolts or wheel nuts must be retightened again to the specified tightening torque after approximately 600 to 3000 miles (about 1000 to 5000 km).

ℹ

Further information on tires and rims is available at any authorized Sprinter Dealer. A placard with the recommended tire inflation pressures is located on

- the driver's door B-pillar for vehicles with a gross weight capacity less than 10,000 lbs (4500 kg) (▷ page 375)
- on a label below the driver's seat on an outward facing position of the mounting pillar for vehicles with a gross weight capacity above 10,000 lbs (4500 kg) (▷ page 375)

The tire inflation pressure should be checked regularly and should only be adjusted on cold tires.

Vehicle Model Type	2500	3500
Rims (steel)	6.5 J x 16	5.5 J x 16
Rims (light alloy)	6.5 J x 16	–
Wheel offset	2.13 in (54 mm)	–
Half dual spacing		4.82 in (122.5 mm)
Wheel fixture	Wheel bolts	Wheel nuts
Tightening torque (steel wheel)	177 lb-ft (240 Nm)	133 lb-ft (180 Nm)
Tightening torque (light-alloy wheel)	133 lb-ft (180 Nm)	-
Summer tires	–	–
All-season tires[1]	LT 245/75 R16 120/116L	LT 215/85 R16 115/112N
	LT 245/75 R16 120/116N	LT 215/85 R16 115/112Q
Winter tires[2]	LT 245/75 R16 120/116L M+S	LT 215/85 R16 115/112N M+S
	LT 245/75 R16 120/116N M+S	

1 Radial-ply tires
2 Radial-ply tires

▼ Tire inflation pressure

For vehicles with a gross weight capacity above 10,000 lbs (4500 kg) only.

For vehicles with a gross weight capacity less than 10,000 lbs (4500 kg) observe the recommended cold tire inflation pressures listed on the tire and loading information placard on the driver's door B-pillar (▷ page 210).

Observe the information on recommended tyre inflation pressure in the "Operation" section (▷ page 210).

The following table lists the recommended cold tire inflation pressures for all load conditions up to the maximum permissible weight limits (GAWR). The tire inflation pressures listed apply to the tires installed as original equipment.

ℹ

In addition to the following table the recommended cold tire inflation pressures are listed on a label below the driver's seat on an outward facing position of the mounting pillar.

Warning ⚠

Follow recommended tire inflation pressures.

Do not underinflate tires. Underinflated tires wear excessively and/or unevenly, adversely affect handling and fuel economy, and are more likely to fail from being overheated.

Do not overinflate tires. Overinflated tires can adversely affect handling and ride comfort, wear unevenly, increase stopping distance, and result in sudden deflation (blowout) because they are more likely to become punctured or damaged by road debris, potholes etc.

Set the correct tyre pressure before loading the vehicle. If the vehicle has been loaded, check the tyre pressures and correct them if necessary.

The tires can be considered cold if the vehicle has been parked for at least 3 hours or driven less than 1 mile (1.6 km) at an ambient temperature of approximately 68 °F (20 °C).

Keeping the tires properly inflated provides the best handling, tread life and riding comfort.

Tire temperature and tire inflation pressure are also increased while driving, depending on the driving speed and the tire load.

Tire inflation pressure changes by approximately 1.5 psi (0.1 bar) per 18 °F (10 °C) of air temperature change. Keep this in mind when checking tire inflation pressure where the temperature is different from the outside temperature.

For example:

If the inside temperature is 68 °F (20 °C) and the outside temperature is 32 °F (0 °C) then the cold tire inflation pressure should be increased by 3 psi (0.2 bar), which equals 1.5 psi (0.1 bar) for every 18 °F (10 °C) for this outside temperature condition.

Check tire pressures more often if subject to a wide range of outdoor temperatures, as tire pressures vary with temperature changes.

! CAUTION

The pressure difference between the tires on a single axle should not exceed 1.5 psi (10 kPa).

Tire	Permissible axle loads (see certification label)					
	Front axle		Rear axle			
	3970 lbs (1801 kg)	4080 lbs (1851 kg)	4410 lbs (2000 kg)*	5360 lbs (2431 kg)	7060 lbs (3202 kg)	7720 lbs (3502 kg)
LT 215/85 R 16 115/112 N	–	55 psi (3.8 bar)	61 psi (4.2 bar)	–	55 psi (3.8 bar)	61 psi (4.2 bar)
LT 215/85 R 16 115/112 Q	–	55 psi (3.8 bar)	61 psi (4.2 bar)	–	55 psi (3.8 bar)	61 psi (4.2 bar=)
LT 245/75 R 16 120/116 L	47 psi (3.2 bar)	–	–	70 psi (4.8 bar)	–	–
LT 245/75 R 16 120/116 N	47 psi (3.2 bar)	–	–	70 psi (4.8 bar)	–	–

▼ Lashing points and carrier systems

Lashing points

! CAUTION

Observe the data on the maximum load-bearing capacity of the individual lashing points.

During full-braking applications, for example, forces can be involved that are much greater than the weight force of the load.

Always use several lashing points in order to distribute force absorption, and make sure that the lashing points have an equal load.

You will find further information on the lashing eyes in the "Operation" section (▷ page 158).

Lashing eyes

The maximum tensile load of the lashing eyes is:

Lashing eyes	Permissible nominal tensile force
Crewbus	3500 N
Panel van	5000 N

Load rails*

The maximum tensile load of the lashing points in the load compartment is:

Lashing point	Permissible nominal tensile force
Load rails in the load compartment floor	5000 N
Lower load rail on the side wall	2500 N
Upper load rail on the side wall	1500 N

The specified values only apply to loads on the load compartment floor if:

- the load is secured to 2 lashing points on the rail and
- the distance to the next lashing point used on the same rail is about 3 ft (1 m).

Roof carrier systems

Maximum roof load and minimum number of pairs of roof rack supports on vehicles with:

	Maximum roof load	Minimum number of pairs of supports
Standard roof	660 lbs (300 kg)	6
Raised roof	330 lbs (150 kg)	3

The data is valid when the load is distributed evenly over the entire roof area.

When using a shorter roof rack, reduce the load proportionately.

The maximum load is 110 lbs (50 kg) per pair of roof rack supports.

! CAUTION

The weight of any load carried on the roof, including the roof rack, must not exceed the maximum permissible roof load.

The roof rack supports must be arranged at equal distances.

The manufacturer recommends that you have an anti-roll bar installed on the front axle.

Warning

High roof loads may cause a significant deterioration in handling, steering and braking characteristics even if the maximum permissible gross vehicle weight or axle loads have not been exceeded.

Always ensure that loads are distributed correctly and adapt your driving style in accordance with the load.

▼ Vehicle identification labels

ℹ

For certain vehicles, vehicle data cards are delivered with the vehicle. These vehicle data cards contain all the important details of your vehicle, e.g. vehicle identification number, engine number and subassembly numbers together with the model and optional equipment codes.

This data is required when ordering parts and for questions of a technical nature.

For reasons of security, card 1 must not be kept in the vehicle. It contains the key number required for obtaining replacement keys.
Handing cards 2 and 3 to an authorized Sprinter Dealer will simplify order processing.

Base of the driver's seat

① Vehicle safety certification label
or
Incomplete vehicle safety certification label

The Vehicle Identification Number (VIN) can be found:

- on the vehicle or incomplete vehicle safety certification label
- embossed on the engine compartment rear bulk (▷ page 379)

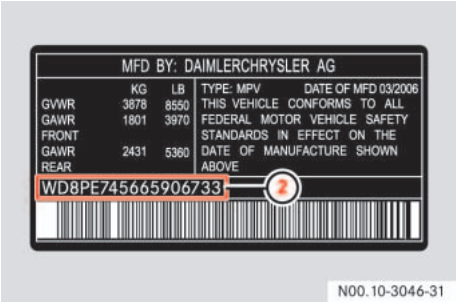

Example vehicle safety certification label (U.S. vehicles)

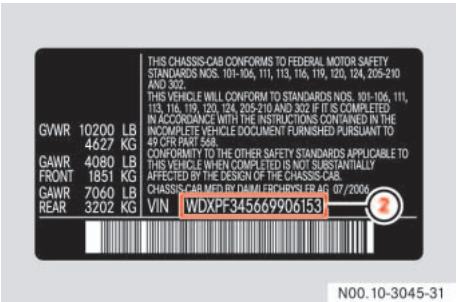

Example incomplete vehicle safety certification label (U.S. vehicles)

② VIN

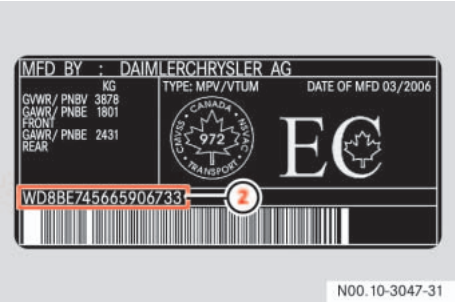

Example vehicle safety certification label (Canada vehicles)

Example incomplete vehicle safety certification label (Canada vehicles)

② VIN

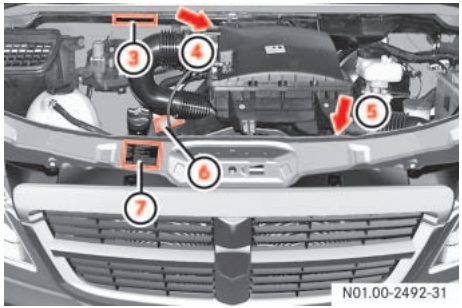

Example Engine Compartment

③ VIN (embossed on the engine compartment rear bulk)

④ Engine number (engraved on gasoline engine)

⑤ Engine number (engraved on diesel engine)

⑥ Emission control information label and engine oil warning label[1]

⑦ Emission control information label (gasoline engine) (▷ page 380)

1. Read and observe the diesel engine oil information (▷ page 362).

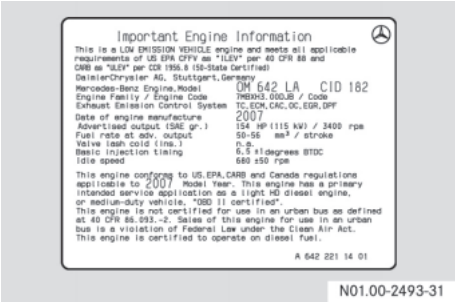

Example emission control information label for diesel engines (U.S. vehicles)

Example emission control information label for diesel engines (Canada vehicles)

N01.00-2495-31

Example emission control information label for gasoline engines

The data shown on the labels is for illustrative purposes only. The data is specific to each vehicle and may vary from the data shown in the illustration. Refer to the label on your vehicle for data specific to your vehicle.

Tire and loading information placard

For vehicles with a gross weight capacity less than 10,000 lbs (4500 kg) only.

The tire and loading information placard is located on the driver's door B-pillar.

N00.10-3043-31

① Tire and loading information placard

The data shown on the placard is for illustrative purposes only. The load limit data and seating data is specific to each vehicle and may vary from the data shown in the illustration.
Refer to the placard on your vehicle for data specific to your vehicle.

For tire and loading information, see "Loading the vehicle" (▷ page 205).

12 V socket 170

A

ABS
see Antilock Brake System
Acceleration skid control (ASR) . . . 44
activating/deactivating 45
display message 291
indicator lamp 268–270
malfunction 270
warning lamp 44, 268
Accessory weight 228
Accident 251
Additional turn signal lamp 307
ADR
see Operating speed governor
Air conditioning in the rear 136
Air conditioning, regulated
refrigerant 362
Air pressure
see Tire inflation pressure
Air vents
air distribution 133
in the rear 137
Airbag
co-driver's 33
driver's 33
safety notes 31
thorax sidebag 34
windowbag 35
Air-conditioning system
see Tempmatic
Air-conditioning system in the rear compartment
air cleaner 240
Air-recirculation mode
air conditioning in the rear 136
rear heating 136
Tempmatic 133
Alarm
audible 250
Anticorrosion/antifreeze fluid . . . 363
Antilock Brake System (ABS) 42
display message 285
indicator lamp 268, 269, 271
malfunction 271
Anti-theft alarm system (ATA) 47
malfunction 250
switching off the alarm 47
Anti-theft system
immobilizer 47
see Anti-theft alarm system (ATA)
Aquaplaning
see Hydroplaning
Armrest 72
Ashtray 168
Aspect ratio 228
ASR
see Acceleration skid control
ASSYST 238
calling up the due date
vehicles with steering wheel buttons 239
vehicles without steering wheel buttons 240
Attaching lashing straps 158
Attaching locking rods 158
Audible alarm 250
Automatic car wash 242
headlamps 193
windshield 193
Automatic headlamp control 78
Automatic locking 64
entire vehicle 65
rear doors 65
Automatic transmission 121
accelerator pedal position 123
changing gear yourself 122
driving tips 123
fluid 362
gearshift pattern 121
kickdown 123
malfunctions 256

maneuvering 124
one-touch gearshifting 122
releasing the parking lock manually 305
selector lever positions 121
shift ranges 123
stopping 124
towing 343
trailer towing 124
working on the vehicle 124
Auxiliary heating 139
heater booster function 137
malfunctions 264
with water heater
changing the remote control batteries 316
remote control 141
selecting a switch-on time 142
setting the switch-on time 143

B

Bar 228
BAS
see Brake Assist
Battery
auxiliary 337
charge indicator lamp 273
check lamp (auxiliary heating remote control) 141
display message 289
in the auxiliary heating remote control 316
in the engine compartment 337
in the key 315
indicator lamp (key) 53
isolating switch 197
recharging 339
reconnecting 339
removing 337
safety notes 195
starter battery
disconnecting 336
Bead 228
Belt force limiters 30
Bi-xenon headlamps 307
driving abroad 180
Body builder guideline 6
Bottle holder
see Cup holders
Brake Assist (BAS) 43
display message 291
indicator lamp 268, 269, 270
malfunction 270
Brake fluid 362
checking the brake fluid level 192
display message 290
Brake lamp 309
changing bulbs 310
high-mounted third brake lamp . . . 309
Brake pads/linings
display message 289
wear indicator 273
Brake system
brake pad/lining wear indicator 273, 289
indicator lamp . . . . . .268—269
malfunction 270, 271, 291
Braking
driving tips 113
Breaking in 174
Bulbs
changing
see Changing bulbs
display message 292, 293

C

Capacities 365
Cards holder 165
Care 241
automatic car wash 242

Care of batteries 196
Care of the vehicle 241
after driving off-road or on construction sites 246
Carrier systems 162, 372
Catalytic converter 181
CD player/CD changer 94
Cell phone 171
Center console 18
switch unit 20
Central locking
locking/unlocking 52
(from the inside) 63
Central locking system
malfunctions 259
Certification label 209
Changing bulbs 306
clearance lamp 312
headlamps 308
identification lamps 311, 313
interior lamp 314
license plate lamp 312
rear lamp units
chassis 310
panel van/crewbus 310
side marker lamps 312
Checking tire pressure electronically with the Advanced Tire Pressure Monitoring System (Advanced TPMS) 217
Checking tire pressure electronically with the Tire Pressure Monitoring System (TPMS) 214
Checks, regular 181
Children
in the vehicle 36
ISOFIX seat securing system 39
LATCH type child restraint system . 39
restraint systems 37
Chock 303
Cigarette lighter 169
Cleaning 241
after driving off-road or on construction sites 246
air cleaner element 240
cockpit 245
headlamps 244
padded boss of the steering wheel 245
rear view camera lens 244
rear window 244
side windows 244
vehicle 242
windshield 243
windshield wipers 243
Clearance lamp
changing bulbs 312
see identification lamp 311
Clock
setting
vehicles with steering wheel buttons 101
vehicles without steering wheel buttons 88
Cockpit 12
Co-driver's seat
foldable 74
Cold tire inflation pressure 228
COMAND
see the separate Operating Instructions
Comfort seat 69
Constant headlamp mode 102
Consumption statistics (vehicles with steering wheel buttons) 106
Coolant 363
adding 191
anticorrosion/antifreeze fluid 363
display message 292
temperature 120
temperature display (vehicle with steering wheel buttons) 93

temperature gauge
(vehicle with steering wheel
buttons) 255
Cornering lamps
changing bulbs 307
Correct use 7
Cruise control 147
deactivating 149
display message 287
downhill gradients 148
lever 148
malfunction 287
problems 263
setting the speed 149
uphill gradients 148
Cup holders 167
Curb weight 228

D

Dashboard lighting
see Instrument lighting
Data cards, vehicle 373
Dehumidification 134
Delayed switch-off
exterior lighting
(vehicles with steering wheel
buttons) 104
Department of Transportation
see DOT
Diesel 359
consumption 366
low outside temperatures 360
reserve fuel warning lamp 276
tank capacity 365
Diesel engine
preglow indicator lamp 111, 276
winter driving 360
Digital speedometer 6
Digital total distance recorder 6
Direction of rotation (tires) 204
Disconnecting the battery 335
Display
vehicles with steering wheel buttons
display messages 284
outside temperature 93
standard display 93
vehicles without steering wheel buttons
display messages 281
outside temperature 87
Door control panel 22
opening the door 55
power windows 144
Doors
display message 298
locking and unlocking 52
opening/closing 55
DOT 225, 229
Downhill gradients
cruise control 148
parking 114, 116
Drinking alcohol or taking drugs and driving 116
Drinks holder
see Cup holders
Driving abroad 180
Driving on flooded roads (fording) 117
Driving safety system 42
see Antilock Brake System (ABS)
see Acceleration Skid Control (ASR)
see Brake Assist (BAS)
see Electronic brake force distribution (EBV)
see Electronic Stability Program (ESP®)
Driving system . . . . . 147—153
cruise control 147
malfunctions 262
Parktronic 150
reverse warning feature 153
Driving tips 175
automatic transmission 123
braking 113
driving abroad 180

driving in wet conditions 117
driving on flooded roads 117
in winter 235
overrun cut-off 117
programmed maximum speed 180
pulling away 112
steering 116

E

EBV
see Electronic brake force distribution
Electric sliding door 57
programming the key 59
Electrical heater booster system . 138
Electrical system
fuses 345
switching on/off 197
Electrical/electronic equipment . . 183
retrofitting 354
Electronic brake force distribution (EBV) 46
malfunction 269
Electronic brake force distribution (EBV)
indicator lamps 46
Electronic Stability Program (ESP®)
display message 286
warning lamp 268
Electronic Stability Program (ESP®)
indicator lamp 268, 269
Electronic Stability Program (ESP®) 43
Electronic Stability Program (ESP®)
display message . . . . . 286–??
indicator lamp 272
malfunction 272
Electronic brake force distribution (EBV)
display message 289–290
malfunction 268
Emergency mode
automatic transmission 256
Emergency tensioning retractors . . 30
Emission control 182
Engine
diagnostic, indicator lamp 277
engine power output, modifying 6
malfunctions 253
not running smoothly 254
number 373
operating safety 6
starting 67
starting problems 253
switching off 116
Engine cleaning 243
Engine electronics
tampering with 354
Engine oil 187, 356
adding 190
checking the level 188
display message 296–297
warning lamp 274
Environmental protection 3
ESP®/ASR warning lamp . . 16, 44, 268
Exterior lighting
additional bulbs 311
Constant headlamp mode (vehicles with steering wheel buttons) 102
delayed switch-off (vehicles with steering wheel buttons) 104
front bulbs 307
locator lighting (vehicles with steering wheel buttons) 103
rear bulbs 309
Exterior mirrors 125
Eyeglasses compartment 166

F

Fastening seat belts
see Wearing seat belts
Fault memory
see Malfunction memory
Fax machine 183
Fire extinguisher 299
First-aid kit 299
Flat tire
changing a wheel 320
Premium tire sealant 326
Flow improvers 361
Folding seat 74
Folding table in the backrest 166
Front foglamps 77, 79, 307
changing bulbs 307
Fuel
gauge 86
line 251, 252
loss 251, 252
malfunctions 252
see Gasoline or Diesel
Fuel filter with water separator
draining 317
Fuel requirements
diesel engine 359
gasoline engine 359
Fuse box
in the driver's seat 348
main 345
Fuse chart 345
fuses in the driver’s seat base 349
Fuses 345

G

Gasoline 358
consumption 366
reserve fuel warning lamp 276
tank capacity 365
Gauge
vehicles without steering wheel buttons
standard display 87
GAWR 229
Gear oil 364
Glove box 165
ventilated 136
Gross Axle Weight Rating
see GAWR
Gross Trailer Weight
see GTW
Gross Vehicle Weight
see GVW
Gross Vehicle Weight Rating
see GVWR
GTW 229
GVW 229
GVWR 229

H

Handbrake 115
applying 114
display message 290
emergency braking 115
indicator lamp 114
releasing 115
Hazard warning lamps 80
switching on 80
Head restraints 72
removing 73
Headlamp flasher 77, 78
Headlamps
bulbs 307
cleaning 244
cleaning system 127, 193
indicator lamp 280
fogged-up 257
malfunctions 257
Heated
rear window 128

seats 73
windshield 127
Heater booster function 137
Heater booster system 138
Heating
rear window 128
seat 73
windshield 127, 134
High-beam headlamps 77, 307
changing bulbs 307
High-pressure cleaners 242
Hood 185
Horn 13
Hydroplaning 118

I

Identification lamps 311
changing bulbs 311, 313
Ignition lock 67
Immobilizer 47
Indicator
vehicles with steering wheel buttons
Service due date 238
vehicles without steering wheel buttons
service due date 239
Indicator and warning lamps
brake system 269
braking . . . . . 268–??
engine oil level 274
seat belt 280
seat belt reminder 280
SRS 272
water separator 280
Indicator lamp
ABS 271
ASR 268, 269, 270
BAS 268, 269, 270
battery charge 273
brake pad/lining wear 273
coolant 275
engine diagnostic 277
ESP® 268, 269, 272
handbrake 114
operating speed governor (ADR) . . 154
poly-V-belt 273
preglow 111, 276
reserve warning indicator (fuel) . . . 276
windshield washer/headlamp cleaning
system washer fluid level 280
Inflation pressure
see Tires, Inflation pressures
Information regarding electronic recording devices 10
Instrument cluster 14, 84
lighting 85
speedometer 85
tachometer 85
vehicles with steering wheel buttons
selecting the language 100
setting the status line 100
Instrument lighting 85
Interior lighting
changing bulbs 314
front 80
rear 82
Interior lighting, rear 82
Interior motion sensor 49
Intermittent wipe 126
ISOFIX child seat securing system . 39
TopTether 41

J

Jack
jacking points 322
preparing 322
storage location 300
Jump-starting 340
connection point 340
Jump-starting connection point . . 340

K

Key
battery check lamp 53
buttons 53
changing the batteries 315
lost 260
malfunction 259–261
problems 259
Key no. 373
Key positions
Kickdown 123
Kilopascal 229

L

Language
display
(vehicles with steering wheel
buttons) 100
Lashing eyes 158
mounting 161
permissible tensile load 371
Lashing eyes/rails 158
Lashing points
maximum load-bearing capacity . . 371
Lashing points and aids 158
permissible tensile load 371
LATCH type child restraint system . 39
License plate lamp 309
changing bulbs 312
Light-alloy wheels 243
Lighting
changing bulbs 306
exterior – see Exterior lighting
instrument 85
interior, front 80
interior, rear 82
Lights
automatic headlamp control 78
front foglamp indicator lamp 77
headlamp flasher 77
low-beam headlamps 77
reading lamp 81
rear foglamp indicator lamp 77
Limit speed
flat tire 333
Load distribution 158
Loading guidelines 156
Locator lighting
setting (vehicles with steering wheel
buttons) 103
Locking button (key) 53
Locking knob 55
Low-beam headlamps 77, 307
automatic headlamp control 78
changing bulbs 307
constant headlamp mode
(vehicles with steering wheel
buttons) 102
driving abroad 180

M

Magnetic door retainer 61
Malfunction memory
(vehicles with steering wheel
buttons) 95
Maximum engine speed 85
Maximum load rating, tires 229
Maximum loaded vehicle weight,
tires 229
Maximum roof load 372
Maximum speed
programmed 180
Menu (vehicles with steering wheel
buttons)
audio 94
malfunction memory 95
operation 93
overview 91
settings 96
telephone 107
trip computer 106

Messages
bulbs 292, 293
coolant 292
doors 298
engine oil level . . . . . 296—297
reserve fuel 297
telephone 291
washer fluid 287, 298
Mirrors
exterior mirrors 125
rear-view mirror 125

N

Navigation system 183
NHTSA reporting procedure 9
Night reflectors
securing 114
Normal occupant weight 229
Notes on operation 116

O

Occupant distribution 229
Odometer 87
setting the unit
(vehicle with steering wheel
buttons) 99
trip meter 86, 87
Oil
see Engine oil
On-board voltage 261
One-touch gearshifting 122
Opening and closing 52
Operating safety 4
Operating speed governor (ADR) . 154
adjusting 155
indicator lamp 154
Operating system
vehicles with steering wheel buttons
audio menu 94
clock/date submenu 101
convenience submenu 105
display messages 284
instrument cluster submenu 99
lighting submenu 102
malfunction memory menu 95
menu overview 91
operation menu 93
settings menu 96
standard display 93
telephone menu 107
trip computer menu 106
vehicle submenu 104
vehicles without steering wheel buttons
display messages 281
standard display 87
vehicles without steering wheel
buttons 87
Outside temperature display
vehicles with steering wheel buttons 93
vehicles without steering wheel
buttons 87
Overhead control panel 19
hands-free microphone 19
interior lighting 81
Overrun cut-off 117
Overview
indicator and warning lamps 16
menus
(vehicles with steering wheel
buttons) 91
switch 20
Oxidation catalyst 181

P

Paper holder 170
Parking 116
on uphill or downhill gradients 114
Parking aid
see Parktronic
Parking brake
see Handbrake

Parking lamps 77
changing bulbs 308
Parking lock
see Automatic transmission
Parktronic 150, 244
cleaning the sensors 244
indicator lamp 262
malfunction 262
range of the sensors 150
roll-back warning 152
switching on/off 153
trailer towing 153
warning display 151, 262
Partition sliding door 66
Parts 352
Pen holder 165
Perimeter lamp 309
Plastic trims 245
Poly-V-belt
malfunction 273
Pounds per square inch
see PSI
Power steering fluid 364
Premium tire sealant
storage location 303
using 326
Premium unleaded gasoline 358
Production options weight 230
Programmed maximum speed . . . 180
PSI 230
PTS
see Parktronic
Pulling away 112
on a slippery surface 112

R

Radial-ply tires 201
Radio 183
changing stations
(vehicles with steering wheel
buttons) 94
Rail transport 175
Rain sensor 126, 127
setting the sensitivity
(vehicles with steering wheel
buttons) 105
Reading lamp 81
Rear bench seat
removing/installing 75
Rear door
locking/unlocking
from the inside 62, 64
with remote control 54
with the key 54
opening/closing
from the inside 62
from the outside 60
Rear foglamp 309
changing bulbs 310
switching on 79
Rear view camera 244
cleaning the lens 244
Rear window
cleaning 244
Rear window heating 128
malfunction 266
Rear window wiper 127
Rear-view mirror 125
Recommended tire inflation pressure 230
Refueling 184
Remote control
auxiliary heating 141
battery check lamp 141
changing the batteries 316
central locking 54
changing the batteries 315
key 53
lost 260
opening the vehicle 52
problems 259
Removing the battery cover in the driver's footwell 336

Removing/installing the floor covering in the driver's footwell 336
Reserve warning indicator (fuel) . . 276
Residual heat mode 134
problems 267
Restraint system 24
airbags 25
belt force limiters 30
child restraint systems 37
display message 288
emergency tensioning retractor . . . 30
front airbags 33
malfunction 272
seat belt 25
thorax sidebag 34
windowbags 35
Reverse lamp 309
changing bulbs 310
Reverse warning feature 153
Rims 230
Roll-back warning
see Parktronic
Roof load 372
Roof rack 162
Roof ventilator 146

S

Seat
adjusting 68
folding rear bench seat 74
folding seat 74
fore-and-aft adjustment 69
heating 73
malfunction 266
height 69
suspension 70
swivelling 70
vertical lock 70
Seat belt 25
adjusting height 27
cleaning 246
telltale 280
wearing 27
Seat heating
switching on 73
Seating capacity 206
Securing a load 158
Securing tensioning straps 158
Selector lever
lock 111, 121
Service
calling up the due date
vehicles with steering wheel buttons 239
vehicles without steering wheel buttons 240
indicator 238
Service information 5
Service life
tires 203
Service products 187, 237
capacities 365
coolants, lubricants, etc. 362
diesel 359
engine oils 356
fuels 358
gasoline 358
notes 355
windshield washer fluid 193
Setting the blower speed 133
Setting the date
vehicles with steering wheel buttons 102
vehicles without steering wheel buttons 88
Settings
resetting all (vehicles with steering wheel buttons) 96
Shift range
automatic transmission 123
display 121

Side lamps 307
Side marker lamps 307
changing bulbs 312
Side wall 230
Side windows
cleaning 244
operating 144
Sliding door
closing aid 57
electric 57
locking/unlocking
from the inside 56
opening/closing 56
Sliding sunroof 145
opening/closing manually 304
resetting 146
Sliding sunroof emergency operation 304
Sliding/tilting sunroof
see Sliding sunroof
Snow chains 236
Spare wheel 301
Speed
adjusting
see Cruise control
Speedometer 85
setting the unit (vehicles with steering wheel buttons) 99
Spinning
see Tires, Direction of rotation
SRS (Supplemental Restraint System) 28
display message 288
SRS (Supplemental Restraint System)
warning lamp 272
Standard seat 69
Standing lamps
changing bulbs 308
rear 309
Steering 116
unlocking 67
Steering column adjustment 76
Steering lock
see Ignition lock
Steering wheel
adjusting 76
buttons (vehicle with steering wheel buttons) 17, 89
releasing the lock 67
Steps 243
Stickers 8
Storage compartment under the co-driver's seat 164
Storage compartments 13, 18, 164–166
co-driver door 299
cup holder 167
driver's door 299
glove box 165
holder for bottled drinks 167
storage compartment above the roof trim 164
storage compartment under the co-driver's seat 164
storage compartments above the windshield 164
storage compartments in the doors 164
Storing tires 204
Submenu
clock/date 101
convenience 105
instrument cluster 99
lighting 102
overview of settings 97
selecting 97
vehicle 104
Surround lighting
see Locator lighting
Suspension seat 69
Switch unit 20
Swivel seat 70

T

Tachometer 85
Tail lamps 309
changing bulbs 310
perimeter lamp 309
Tank
flap 86, 184
malfunction 251–252
reserve fuel, display message 297
Technical Data
Tire inflation pressure 369
Telephone 171, 183
display message 291
hands-free microphone 19
operating
(vehicles with steering wheel
buttons) 107
retrofitting 354
Temperature
setting the unit
(vehicles with steering wheel
buttons) 99
Tempmatic 129
air distribution 129, 133
air vents
in the dashboard 129
airflow 133
air-recirculation mode 133
control panel 131
defrosting 135
economy mode 131
fogged-up windows 134
reheat function (dehumidification) . 134
residual heat 134
special settings 134
ventilation/cooling 132
The first 1,500 km 174
Thorax sidebag 34
Tightening torque
wheel nuts/wheel bolts 324
TIN 225, 230
Tire and loading information
placard 205
terminology 228
Tire and loading information
placard 375
Tire Identification Number
see TIN
Tire inflation pressure 369
checking manually 213
Checking tire pressure electronically
with the Advanced Tire Pressure Monitoring System (Advanced TPMS)*,
(Canada only) 217
Checking tire pressure electronically
with the Tire Pressure Monitoring
System (TPMS) 214
recommended tire inflation
pressure 210
setting the unit
(vehicles with steering wheel
buttons) 100
table 370
Tire valves 201
Tires 199, 212
Advanced Tire Pressure Monitoring
System (Advanced TPMS)*,
(Canada only) 217
air pressure 228
alignment and balance 120
care and maintenance 202
damage 202
direction of rotation, spinning 204
driving instructions 117
important guidelines 201
inflation pressure 210, 213
information placard 205
inspection 202
load limit information 206
load rating 222, 223, 230
loading Information 205
loading terminology 228

loading the vehicle 205
low tire pressure indicator 278
maximum load 231
messages in the multifunction display 278
ply composition and material used . . . 230
problems under/overinflation 221, 222
radial-ply tires 201
retreads 200
rotating 204, 231
seating capacity 206
service life 203
sizes 222
speed rating 119, 224, 230
storing 204
temperature 212, 369
terminology 228
TIN 225, 230
Tire Identification Number see TIN
Tire Pressure Monitoring System (TPMS), (USA only) 214
TPMS malfunction indicator 278
traction 119, 230
tread 230
tread depth 203, 234
Treadwear Indicator (TWI) 118
Treadwear Indicators 230
valves 201
vehicle maximum load on 231
wear pattern 231
winter tires 234
Tongue Weight Rating
see TWR
TopTether 41
Tow-away protection 48
Towing 342
in the event of a malfunction in the electrical system 344
in the event of particular malfunctions 343
vehicle that is stuck 343
Towing eye
installing/removing 342
Tow-starting 341
Traction 230
Trailer
safety notes 175, 176
towing 163, 175, 176
towing with Parktronic 153
Tread 230
Tread depth 203
Tread depth (tires) 234
Treadwear Indicator (TWI) 118
Treadwear Indicators 230
Trip computer
menu (vehicles with steering wheel buttons) 106
Trip meter 87
resetting 86
Turn signals 79
front 307
changing bulbs 308
malfunctions 257
rear 309
changing bulbs 310
side-mounted 307
Twin co-driver's seat 71
Two-way radio 183
retrofitting 354
TWR (Tongue Weight Rating) 231

U

Uniform tire quality grading standards 231
Uphill gradients
cruise control 148
parking 114, 116

V

Vehicle
assemblies 194
automatic locking when driving 64
cleaning 242

closing 52
correct use 7
data cards 373
identification number 373
leaving in storage 265
locking with key 55
locking/unlocking centrally 64
opening 52
with remote control 54
with the key 54
registering 5
towing 342
towing out 343
tow-starting 341
transporting 344
Vehicle alteration 6
Vehicle capacity weight 231
Vehicle identification plates 373
Vehicle loading
load limit 206
loading terminology 228
terminology 228
Vehicle maximum load on the tire 231
Vehicle safety certification label . 373
Vehicle tool kit 300
Vehicle/engine emission label . . . 375

W

Warning labels 8
Warning lamp
ESP®/ASR 43, 44, 268
warning lamp 299
Warning triangle 299
Warranty information 5
Washer fluid 127
adding 193
Water separator
draining the fuel filter 317
Wheel 117
changing 320
Wheel nuts/wheel bolts
retightening 324
tightening torque 324
Wheel, tires and 199
Windows
cleaning the rear window 244
cleaning the side windows 244
cleaning the windshield 243
fogged-up 134
power windows 144
washer fluid 127
Windshield
cleaning 243
heating 127, 134
malfunction 266
Windshield heating 127
Windshield washer fluid
display message 287, 298
wiping with 127
Windshield washer system 193
indicator lamp 280
rain sensor 126
Windshield wipers 126
cleaning 243
intermittent wipe 126
malfunctions 258
rain sensor 126, 127
setting the sensitivity (vehicles with steering wheel buttons) 105
rear window wiper 127
replacing the wiper blades 319
windshield washer fluid 127
Winter driving 234, 235
snow chains 236
Winter operation
tires 234
Wiper blades 319
Working on the vehicle 124

DODGE SERVICE

Stick with the Specialists™

DaimlerChrysler Corporation

81-326-0799

Second Edition

Printed in U.S.A.