CONTENTS

1 Instructions Before Using the Vehicle 17

Introduction 18

The Owner's Handbook 18
Status at Time of Printing 18
Special Statement 18
Warranty and Service 18
Privacy Notice 19
Symbols Used 19

Vehicle Identification Information 21

Vehicle Identification Markings 21
Vehicle Identification Plate 21

Instructions for Use of Electric Vehicle 22

Effects of Ambient Temperature 22
Instructions for High Voltage Battery Pack Recycling 22
Driving Range 23
Equalisation Charging 24
Intelligent Charging 24
Intelligent Heating 25
Crash Outage Control 25

CONTENTS

High Voltage System 25
Precautions in the Event of an Accident 27
Charging and Discharging Requirements 28
Charging Your Vehicle at Home 30
Installed Charging Points 30
Home Charging Guide 30
Charging and Medical Condition Awareness 30
Charging Port 31
Electric Charging Identifier Label 34
Rapid Charging 36
Slow Charging 36
Scheduled Charging 38
Charging Information 38
Equalisation Charging 38
Charging Time 39
Discharging 44
Battery Safety Information 46
High Voltage Battery Pack 47
12V Lead-acid Battery 47

Portable Batteries (button type, cylindrical, built-in batteries, etc.) 48

2 Brief Introduction to Vehicle Functions 49

Instrument Pack 50

Instrument Pack - Colour Display 50

Message Centre 52

Warning Message 53

Warning Lamps and Indicators 54

Lights and Switches 65

Master Light Switch 65

Headlamp Levelling Adjustment 66

Main Beam Switch 67

Direction Indicator Switch 70

Fog Lamps 71

Hazard Warning Lamps 71

Wipers and Washers 72

Front Windscreen Wiper and Washer Operation 72

Front Windscreen Wash and Wipe 73

Rear Windscreen Wiper and Washer Operation 74

CONTENTS

Horn **76**
Rearview Mirrors **77**
Exterior Rearview Mirrors 77
Interior Rearview Mirrors 79
Windows **80**
Power Operated Window Switch 80
Window Operation 81
Sunroof* **83**
Instructions for Use 83
Sunroof Operation 84
Sunvisor **88**
Interior Lighting **89**
Front Interior Lamp 89
Rear Interior Lamp* 90
Power Socket **91**
Front Console Power Socket 91
Rear USB Port* 92
USB Port at Interior Rearview Mirror* 92

Wireless Charging System for Mobile Phones* **93**
Wireless Charging of Mobile Phones 93
Storage Compartments **95**
Instructions 95
Glove box 95
Storage Boxes 96
Glasses case* 96
Cup Holder **98**
Centre Console Cup Holder 98
Rear Armrest and Rear Cup Holder* 98
3 Preparations for Trip **99**
Keys **100**
Overview 100
Replacing the Smart Key Battery 102
Anti-theft Systems **107**
Immobiliser 107
Body Anti-theft System 107
Tailgate **112**

CONTENTS

Manual Tailgate* 112
Electric Tailgate* 113
Tailgate Emergency Open 117
Load Carrying 119
Load Space 119
Internal Loading 119
Towing 120
Towing Function 120
Steering System Adjustment 122
Steering Wheel Position Adjustment 122
Electric Power Steering 122
Steering Feel Mode 123
Electric Power Assisted Steering (EPS) Warning Lamp 123
Alcolock 124
4 Drive the Vehicle 125
Starting and Stopping the Power System 126
Stopping the Power System 127
Economical and Environmental Driving 128

Running-in 128
Environment Protection 128
Economic Driving 128
Driving in Special Environments 129
Check and Service 131
Gear Shift 132
Shift Operation 132
Protection Mode 134
Driving Mode 136
Integrated Braking System (IBS) 137
IBS System 137
One Pedal Mode 138
Energy Regeneration during Coasting 139
5 Leave Home Safe 141
Seat Belt 142
Protection Provided by Seat Belts 143
Correctly Wearing Seat Belts 144
Children and Seat Belts 148

CONTENTS

Seat Belt Pre-tensioners 151
Seat Belt Check, Maintenance and Replacement 152
Airbags 155
Overview 155
Airbag Deployment 156
Conditions in Which Airbags Will Not Deploy 161
Service and Replacement of Airbags 165
Child Restraint - For Australia 167
Important Safety Instructions about Using Child Restraints 167
Fixing Child Restraints 170
Child Restraint Groups and Installation Position 173
Child Restraints - For UK and Others 176
Important Safety Instructions about Using Child Restraints 176
Fixing Child Restraints 180
Child Restraint Groups and Installation Position 183
Child Proof Locks 187
Body Stability Control System 188
Antilock Brake System (ABS) 189
Electronic Parking Brake (EPB) 190

Auxiliary Braking System **193**
Auto Hold **194**
Hill Hold Control (HHC) **196**
Hill Descent Control (HDC) **197**
Active Rollover Protection (ARP) **199**
Emergency Braking Hazard Warning Strobe (HAZ) **200**
Multi-Collision Brake System (MCB) **201**
Pedestrian Alert Control System **202**
Tyre Pressure Monitoring System (TPMS) **203**

6 Comfort Systems **205**

Seat Adjustment **206**
Front Seats 206
Rear Seats 207
Seat Heating Function* 208
Headrest Operation 209
Ventilation System **210**
A/C Filter Element 211
Vents 211

CONTENTS

A/C Control Panel 213
Control Panel-Type 1* 213
Control Panel-Type 2* 213
A/C On/Off Shortcut Button 213
Defrost/Demist Button 214
Heated Rear Windscreen Button 214
A/C Control Interface 215
System On/Off 215
Automatic Temperature Control Mode 215
Cooling or Heating On/Off 215
Air Distribution Mode 215
Air Circulation Mode 216
A/C Settings 216
Blower Speed Control 216
Temperature Control 216
Double Finger Sliding 216
Air Self Drying and Deodorisation 217
Steering Wheel Entertainment Control Buttons 218
Intelligent Display 219

7 Intelligent Driver Assistance 231

Intelligent Driver Assistance Description 232

Intelligent Driver Assistance Disclaimer 232

Cameras and Radars 234

Driver Assistance Cameras 234

Driver Assistance Radars 236

Adaptive Cruise Control (ACC) 238

Adaptive Cruise Activation 238

Adaptive Cruise Target Following Distance Adjustment 240

Adaptive Cruise Target Speed Adjustment 240

Adaptive Cruise Control Exit Activation 241

Automatic Deactivation of Adaptive Cruise Control 241

Adaptive Cruise Control Reactivation 241

Adaptive Cruise Override 242

Clearing Target Speed Memory 242

Explanation of Function Limitation 242

Special Driving Environments 243

Intelligent Cruise Assist (ICA) 247

Intelligent Overspeed Alarm 252

CONTENTS

Speed Limit Assist System **254**
Lane Departure Assist **258**
Forward Collision Assist **262**
Blind Spot Assist (BSD, LCA)* **266**
Rear Cross Traffic Assist (RCTA, RCTB)* **268**
Rear Collision Warning (RCW)* **270**
Door Opening Warning (DOW)* **271**
Ultrasonic Sensor PDC System **273**
Parking Camera* **274**
360 Around View Monitor* **275**
Driver Status Monitoring System **277**
MG Pilot Customisation **279**

8 Road Emergency Response **281**

Hazard Warning Devices **282**
Warning Triangle 282
Jump Start **283**
Towing Hook and Transport **285**

Vehicle Towing 285
Vehicle Transport 286
Suspended Towing 288
Tyre Repair 290
Tyre Repair Tool 290
Tyre Repair 290
9 Maintenance 293
Maintenance 294
Regular Maintenance 294
High-voltage Battery Pack 297
Precautions and restricted conditions for use of battery 297
Bonnet 299
Opening the Bonnet 299
Closing the Bonnet 299
Bonnet Open Alarm 299
Front Compartment 301
Cooling System 302
Coolant Check and Top Up 302

CONTENTS

Coolant Specification 302
Brake 304
Brake Fluid Check and Top Up 304
Fuse Replacement 306
Fuse 306
Passenger Compartment Fuse Box 307
Front Compartment Fuse Box 309
12V Battery Maintenance and Replacement 313
Battery Maintenance 313
Battery Replacement 314
Bulb Replacement 315
Bulb Specification 315
Washer 316
Washer Fluid Check and Top Up 316
Washer Nozzles 317
Wipers 318
Wiper Blades 318
Front Windscreen Wiper Blade Replacement 319

Rear Windscreen Wiper Blade Replacement 320
Tyres 321
Overview 321
Tyre Inspection 323
Tyre Wear Indicators 324
Tyre Rotation 325
Snow Chains 325
Cleaning and Vehicle Care 327
Exterior Care 327
Interior Care 333
10 Technical Data 337
Technical Data Dimensions 338
Complete Vehicle Mass Parameters 339
Parameters of Towing Device 340
Towing Parameters 340
Dynamic Performance Parameters 342
Parameters of Drive Motor 343
Parameters of High-voltage BatteryPack 344

CONTENTS

Battery pack type 1 (49kWh) 344
Battery pack type 2 (62.2kWh) 345
Battery pack type 3 (64kWh) 346
Recommended Fluids and Capacities 348
Four-wheel Alignment Parameters (Unladen Condition) 349
Wheels and Tyres 350
Tyre Pressures (Cold) 351

Instructions Before Using the Vehicle

Introduction 18

Vehicle Identification Information 21

Instructions for Use of Electric Vehicle 22

Charging and Discharging Requirements 28

Battery Safety Information 46

Introduction

The Owner's Handbook

This handbook describes all the standard features or functions of the vehicles within the model range. Some information may be inapplicable to your individual model.

If you have any questions about the operation and parameters of the vehicle, please contact an MG Authorised Repairer which will be glad to advise you.

The illustrations in the Owner's Handbook are for reference only.

The information contained in this handbook may vary slightly depending on the vehicle configuration, software version and sales regions.

Any Authorised Service Centre mentioned in this publication refers to an MG Authorised Repairer.

Status at Time of Printing

Special Statement

MG operates a policy of constant product improvement and therefore reserves the right to change specifications without notice at any time.

Whilst every effort is made to ensure complete accuracy of the information in this publication, no liabilities for inaccuracies or the consequences thereof, including loss or damage to property, or injury to persons, can be accepted by the manufacturer or the MG Authorised Repairer who supplied the publication, except in respect of personal injury caused by the negligence of the manufacturer or the MG Authorised Repairer.

Warranty and Service

Please consult the owners section on the MG website for the warranty terms and conditions, warranty statement, exemptions and service item renewal schedule.

Privacy Notice

According to the configuration, your vehicle may be equipped with an onboard audio, visual & navigation system and an intelligent connectivity system that allows you to connect to your vehicle via our app on your mobile phone. Due to the nature of the intelligent connectivity system and the app, we process personal data.

We highly respect your privacy and personal information, and we will inform you of the following important information through the Privacy Notice. The latest version of the Privacy Notice can be found in your vehicle infotainment system. If the Privacy Notice is not available to you in your infotainment system, please read the privacy notice in your mobile app.

The contents of this notice may change from time to time, so you should review it periodically. Where possible, we will also contact you directly to notify you of any substantial changes.

Symbols Used

Warning

This warning symbol identifies procedures that must be followed precisely, or information that must be considered with great care, in order to reduce the risk of personal injury or serious damage to the car.

IMPORTANT

IMPORTANT
The statements stated here must be followed strictly, otherwise your car could be damaged.

Note

Note: This describes helpful information.

This symbol indicates parts described must be disposed of by authorised persons or bodies to protect the environment.

Asterisk

An asterisk (*) appearing after the title or the text, identifies features or items of equipment that are only fitted to some models, and may not be fitted on the vehicle your purchased.

Illustration Information

Identifies components being explained.

Identifies movement of components being explained.

Vehicle Identification Information

Vehicle Identification Markings

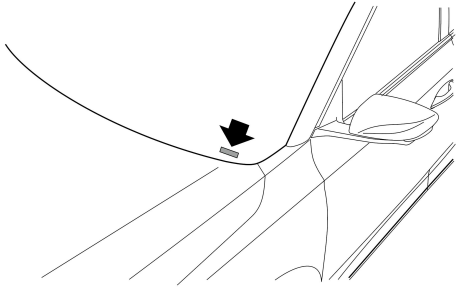

Vehicle Identification Number (VIN) at windscreen

Always quote the Vehicle Identification Number (VIN) when communicating with your Authorised Repairer. If the drive motor or electric drive unit is involved, it may be necessary to provide the identification numbers of these assemblies.

Vehicle Identification Number (VIN) Location

Vehicle Identification Number (VIN)

- On the floor under the right front seat.
- On the fascia panel visible through the bottom left hand corner of the windscreen.
- On the identification plate.
- On the inner side of the tailgate visible by opening the tailgate.

Note: The DLC of the vehicle is located above the driver side lower closure panel, and the VIN information can be read using the approved diagnostic equipment.

Drive Motor Number

Stamped on the lower part of the drive motor housing.

Electric Drive Unit Number

Stamped on the upper part of the electric drive unit housing.

Vehicle Identification Plate

The identification plate is located at the lower part of pillar B . It contains the VIN , manufacturer name, etc.

Instructions for Use of Electric Vehicle

Effects of Ambient Temperature

The working performance of the high voltage battery pack fitted to your vehicle is related to the ambient temperature. This battery powers the vehicle power system and therefore it is recommended that where possible the vehicle should be used within the temperature range of -15℃~45℃ . This will ensure that the vehicle is in the optimum working state and will help extend the service life of the high voltage battery pack. Extremely high or low temperatures will affect the performance of the high voltage battery pack and vehicle.

Instructions for High Voltage Battery Pack Recycling

The high voltage battery pack fitted to your vehicle contains several lithium based battery cells. Arbitrary disposal may cause pollution, hazard and damage to the environment. The high voltage battery pack MUST be recycled by an MG Authorised Repairer. Please refer to the following information and requirements.

- ONLY qualified personnel should work with the high voltage system.
- High voltage safety: the high voltage system fitted to your vehicle features a HV battery containing high voltage components such as lithium battery packs and high voltage wiring harness; DO NOT attempt to dismantle any area of this system, suitably trained professional staff must observe insulation safety protection before working on or near the high voltage system.
- Transportation: The high voltage battery pack is classed as a Category 9 hazardous material and must be transported by vehicles qualified in transporting Category 9 hazardous materials.
- Storage: All HV components (including batteries) should be stored at room temperature and in a dry environment. They must be kept away from dangerous sources, such as flammable objects, heat and water sources.
- Internal composition: The high voltage battery pack consists of lithium batteries (pack), PCB's, HV and normal electric wiring, a metal casing and other components.

It is recommended that the used high-voltage battery pack generated from vehicle scrapping or any other reasons be disposed of by a take-back service network designated by the MG Authorised Repairer. The maintenance, recycling and disposal of high-voltage battery packs will be done by the following organizations. For details, please contact an MG Authorised Repairer.

- Maintenance service organization: MG Authorised Repairer;
- Take-back service network: Designated MG Authorised Repairer. For detailed information on the network, please refer to the relevant countries official website.

Note: Waste high-voltage battery packs should be handed over to authorised units for disposal. If dismantling or dismantling high-voltage battery packs without authorization leads to environmental pollution or safety accidents, the owner of the high-voltage battery pack should bear corresponding responsibilities.

Driving Range

The driving range of your vehicle depends on the HV battery condition, quantity of available electricity, vehicle age (current remaining battery life), weather, temperature, road conditions and personal driving habits etc.

The range can be affected by other electrical loads (such as A/C, lights etc), driving style and general road conditions.

It should be noted that:

- The driving range is related to the rate of discharge. In order to avoid a high rate of discharge from affecting the performance of the high voltage battery pack, it is recommended that the vehicle is connected to a suitable charger upon illumination of the low battery warning lamp in the instrument pack.
- The actual driving range of the vehicle will reduce with the increase of vehicle age.
- The use of A/C will reduce the driving range.
- The driving range varies at different speeds.
- At low temperatures, the driving range will be reduced due to temperature characteristics of the battery during use.
- In some instances of extreme temperatures and low battery voltage, you may experience insufficient acceleration or power reduction. This is due to battery characteristics.

To help increase the range of the vehicle please observe the following:

- Have the vehicle regularly maintained as per service schedule.
- Always ensure the tyre pressures are correct.
- Try and use the vehicle within the recommended ambient temperatures.
- Do not park or store the vehicle for long periods with a low state of charge, where possible charge the vehicle as soon as possible prior to storage.
- Remove unnecessary articles to reduce the vehicle load.
- Use of high power consuming systems such as A/C and heating will use large amounts of power. This will reduce the driving range.
- At a high speed, where possible, close the windows to reduce wind resistance and power consumption.
- Try to maintain a steady speed at all times, avoid constant acceleration and braking.
- During acceleration, apply the accelerator pedal as gently as possible.
- During deceleration, release the accelerator pedal; under certain conditions when not applying the brake or gently applying the brake, the energy regeneration system (KERS) will assist in charging the HV battery and extend the driving range.

Equalisation Charging

In order to assist in extending the service life of the high voltage battery pack it is recommended that an equalisation charge is carried out at regular intervals.

Please see 'Equalisation Charging' in the 'Charging and Discharging Guide' section.

Intelligent Charging

The 12V battery SOC (State Of Charge) is constantly monitored, when the vehicle is powered OFF it is possible, under certain conditions, that the HV battery will automatically charge the 12V battery to ensure the vehicle is able to enter READY mode. This function will activate and switch off automatically.

Note: The system will suspend intelligent charging if a fault is present, when starting or if the vehicle is being charged by an external device.

Note: The driving range will be reduced after intelligent charging.

Note: The intelligent charging function is suspended when the high voltage battery is in a low SOC.

Intelligent Heating

The user is able to operate intelligent heating on the charging management interface in the entertainment display. When the vehicle operates at low temperatures or navigates to a charging station, it is recommended to turn on intelligent heating, this will preheat the high-voltage battery pack. This can improve the driving performance and charging speed in low temperature environments, but will consume part of the power, resulting in reduced driving range.

Crash Outage Control

If a crash or serious impact occurs, a signal from the SDM (Airbag Control Module) will disconnect the relays within the battery management system isolating the high voltage battery from the systems on the vehicle.

High Voltage System

- ***There are two kinds of high voltage power supplies (AC and DC) in the high voltage system of the vehicle. These high voltage system components feature warning labels identifying the high voltage system. Please always observe the safety requirements on the labels.***
- ***To avoid personal injury, non-professional maintenance personnel are prohibited from contacting, dismantling or fitting any component of the high-voltage system without permission.***

The high voltage system layout is shown below:

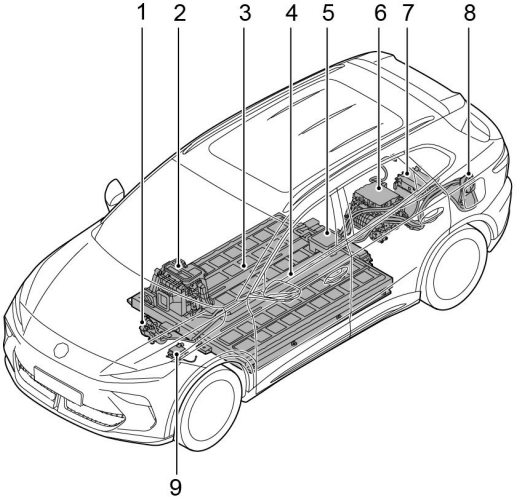

1 Electric A/C Compressor
2 Electric Heater
3 High-voltage Battery Pack
4 High-voltage Harness
5 High-voltage Power Distribution Unit
6 Electric Drive Unit
7 Combined Charging Unit (CCU)
8 Charging Port
9 HV Battery Heater

Precautions in the Event of an Accident

- *Ensure the vehicle is in P, the parking brake is applied and the vehicle power system is OFF.*
- *If any cables on the vehicle are exposed, in order to prevent electric shock or even death DO NOT make any contact with any cable.*
- *In a situation where the the vehicle has become alight, if the fire is manageable and safety permits, a carbon dioxideextinguisher can be used to extinguish the fire, contact the fire services as soon as possible; if the fire is large and spreading quickly, immediately evacuate the vehicle and contact the fire services immediately.*
- *If the vehicle is involved in a collision and cannot be re-started, the negative cable of the 12V battery and Manual Service Disconnect (MSD) MUST be disconnected prior to rescue.*
- *When the vehicle is completely orpartially immersed in water, switch off the vehicle power system and evacuate the car immediately. The negative cable of the 12V battery and Manual Service Disconnect (MSD) MUST be disconnected prior to rescue or as soon as the vehicle is refloated/removed from the water. Observe the water/vehicle for any abnormal signs such as excessive bubbles or noises, this may indicate battery short circuit issue. If no signs are evident, there should not be a shock risk from the body work and recovery can commence.*
- *If your car is being recovered by an independent recovery agent, please contact an MG Authorised Repairer for guidance.*
- *The vehicle is supplied with an emergency response information card. Please show the card to the rescue services when they arrive.*

Charging and Discharging Requirements

Under normal circumstances it is strongly recommended that you use a slow charging method and avoid constant or regular use of rapid chargers.

Prior to using any charging equipment please inspect the sockets, plugs and cables for any damage. DO NOT use any equipment that shows signs of misuse or damage.

It is recommended that the charging cable be connected to the charging device before connecting to the vehicle and charging commences.

DO NOT attempt to switch the vehicle power system to READY during charging.

After charging completion, switch off the charger (where necessary), disconnect the cable from the vehicle, fit the water proof blanking plugs, close the charging port door. If necessary you can then disconnect the cable from the charger (where applicable).

Whilst charging the car on rainy days, where possible, please avoid connecting the charger during torrential rain or storms. If excessive water is evident around the charging plugs please use a suitable cloth do dry the area as best possible before removing the waterproof blanking plugs and connecting the charging cables.

DO NOT touch the charging connector or charging plug when your hand is wet.

DO NOT stand in water or snow when connecting or disconnecting the charging cable.

***DO NOT** attempt to charge when the charging connector and plug are wet.*

***Always** keep the charging connector and charging plug in clean and in a dry condition. Be sure to keep the charging cable in a condition where there is no water or moisture.*

***Only** use the correct charger for charging the electric vehicle. Using any other charger or connector configuration may cause failure.*

***Take** care not to drop the charging connector. This could result in damage.*

***STOP** charging or discharging immediately if you find anything abnormal, such as sparks, burning or smoke.*

***Always** hold the charging connector handle or plug when connecting or removing the charging cable, if you pull the cable itself (without using the handle), the internal wires may disconnect or get damaged. This may lead to electric shock or fire.*

***High** voltage charging or discharging equipment can cause interference with electronic medical devices. When using medical electrical devices such as pacemakers, please consult your doctor about whether charging or discharging your electric vehicle will impact the operation of the device. In some instances, electromagnetic waves that are generated from the charger can seriously impact medical electric device operation.*

***NEVER** use a high powered jet wash directly on the charger door or to clean around the charge point.*

Charging Your Vehicle at Home

If you want to use an emergency home charging kit, it is essential that you check with a qualified electrician that the infrastructure of your property will support the charging equipment. Please seek qualified advice that your current electrical supply and circuits will support the requirements of the charging equipment.

Installed Charging Points

Various companies will supply and install charging points to your property, MG insist that only qualified reputable suppliers and installers are used - failure to have the correct equipment installed by a qualified professional may result in overloaded circuits and fire.

Home Charging Guide

ONLY use certified approved equipment.

ONLY use qualified suppliers and installers.

When the battery is fully charged, disconnect the cable plug from the vehicle socket - if it is necessary to interrupt the charging of the vehicle, isolate the power supply first, then disconnect the vehicle plug.

NEVER allow water or fluids to enter or contaminate your charger or vehicle charging sockets.

NEVER use damaged charging points, equipment or sockets.

STOP charging immediately if you see anything unusual, smell something burning or see sparks.

ALWAYS follow the operating instructions supplied with your charging equipment.

Note: The charging point and power supply infrastructure must be installed and serviced by suitable qualified personnel from an approved installation company using only the materials recommended by them.

Charging and Medical Condition Awareness

High voltage charging equipment can create areas of strong electromagnetic interference, this may cause operational issues with electronic medical devices.

When using medical electrical devices such as pacemakers or cardioverter defibrillators (ICD's), please consult your doctor about whether charging or discharging your

electric vehicle will an impact on the operation of the device. In some instances, electromagnetic waves that are generated from the charger can seriously impact medical electric device operation.

Note: There are no cautions issued about medical devices when the car is not charging or discharging. It is perfectly safe for individuals fitted with pacemakers or cardioverter defibrillators to drive or ride in the vehicle.

Charging Port

The charging port is located behind the charging port door located rear left of the vehicle.

To open the door, ensure the vehicle is unlocked, press the charging port door and release - the door will open to reveal the waterproof plug cover.

Remove the plug cover to reveal the combined charging port.

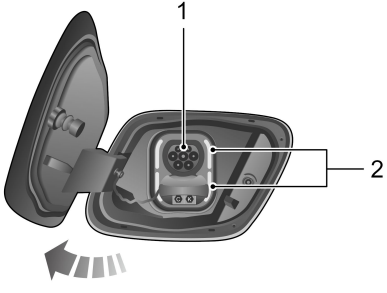

1 Slow and Fast Charge Port - 7 Pin - Type 2 Plug

2 Rapid Charge Port - 7 Pin and 2 Pin - CCS Type Plug

Note: In order to use the rapid charger socket, the lower waterproof plug cover will require removal.
Note: When the charging port cover is not unlocked,DO NOT forcibly open the charging port cover.

After charging, refit the waterproof plug cover (where necessary), close the charging port door, push the door fully home until the latch locates.

ALWAYS ensure that any excess water is removed from the port area before connecting any charging device.

Charging Port Electronic Lock

In order to prevent the charging connector and cable being disconnected inadvertently during charging, the charging socket features an electronic locking mechanism.

The electronic lock is activated as soon as the vehicle begins charging, and remains in a locked state until the charging is finished or interrupted.

Whilst the charging cable is connected DO NOT attempt to remove the plug.

Manually Releasing the Charging Port Lock in Emergency Situations

The vehicle features an emergency release device for the charging port lock.

To access the manual release, remove the trim plate covering the service access hole on left side of boot -see picture.

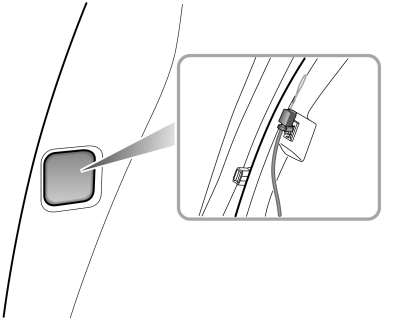

Pull the release cable handle, remove the connector plug whilst maintaining tension on the cable, this will release the locking device.

Electric Charging Identifier Label

Identifier Label on Slow Charging Kit

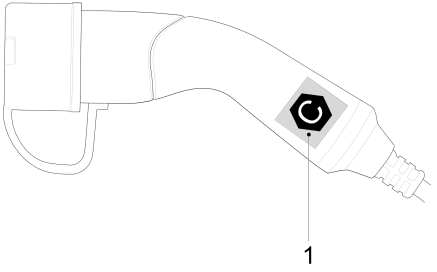

1 AC charging identifier label

Note: Users can purchase a slow charging kit from an MG Authorised Repairer.

Identifier Labels on Charging Port

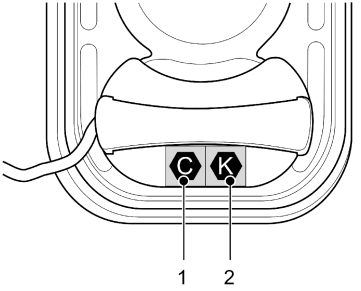

1 AC charging identifier label

2 DC charging identifier label

Precautions for AC or DC charging

After opening the charging port door, check the charging identifier symbol on the plug cover. Check the charging connector identifier symbol on the AC or DC charger cable. After checking that the alphabetic characters of the charging identifier symbols match, proceed to the next charging step.

Note: There is a risk of failure, fire or injury etc. when usinga charging connector with unmatched identifiersymbols.

Electric charging identifier label symbol table

Supply Type	Configuration	Type of Accessory	Voltage range	Identifier
AC	7P	Vehicle connector and vehicle inlet	≤480V	C
DC	7P+2P	Vehicle connector and vehicle inlet	50V–500V	K

Rapid Charging

Note: Please read any equipment operating instructions carefully prior to using the rapid charging station. Each type of charger may use different instructions.

Note: The cable of the charging plug should be shorter than 30 m.

If you have any doubts, please seek professional assistance.

Rapid Charging Safety Precautions

Before connecting the rapid charger, switch the vehicle power system OFF and wait 10 seconds.

Note: If at any time during the charging process you should want to check the state of charge, please power on the vehicle. The high voltage battery state of charge will be displayed in the message centre in the instrument pack.

Note: Considering the safety and service life of the high voltage battery, when using a rapid charging station to charge the vehicle the battery will not become fully charged, and therefore the instrument pack may display less than 100% power. If you have a long journey planned, it is recommended that you use a slow charging point to charge the vehicle so as not to affect your journey.

Slow Charging

Note: Carrying out a full slow charge is the only way for the high voltage battery to reach the optimal equilibrium state (equalisation charge).

High voltage battery chargers are available with various power outputs. Chargers with outputs of up to 11 kW are generally considered as slow chargers, larger than 11 kW are considered as fast chargers and rapid chargers are available in AC or DC outputs. Generally the AC chargers are rated at 43 kW and the DC chargers at 50 kW plus.

Charging times are dependent on charger output.

To carry out an equalisation slow charge, it is recommended that the charger output does not exceed 11 kW.

Note: Chargers of up to 7kW power output are powered using standard household single phase power. Any chargers that are rated above this, 11kW for example, will require a 3 phase power supply.

AC Charging Points

IMPORTANT
Please ensure that only charge points that meet IEC 61851 and IEC 62196 are used to connect to your vehicle.

Using an AC charging device:

1 Ensure the vehicle is powered OFF and all doors are closed.

2 Open the charging port door.

3 Plug the cable from the charger point into the vehicle. Lock the vehicle.

4 On completion of the charge, shut off the power, unlock the vehicle and disconnect the plug from the vehicle.

5 Ensure the charge socket is free from debris. Close the charging point door.

Note: If at any time during the charging process you want to check the state of charge, please power the car to operate the instrument pack.

Residential Charging

During the charging operation the vehicle power system must be OFF. Carry out the following procedure to charge the vehicle:

1 Ensure the vehicle is powered OFF and all doors are closed.

2 Open the charging port door.

3 Connect the 7 pin charging plug to the socket on the vehicle.

4 Connect the charging device plug to the domestic electricity supply. Lock the vehicle.

5 On completion of the charge, shut off the power, unlock the vehicle, disconnect the plug from the vehicle, and then the domestic plug.

6 Ensure the charge socket is free from debris. Close the charging point door.

Note: RCD Type B or RCD Type A (DC 6mA) may be used. The RCD MUST conform to IEC 62955 and be from an established manufacturer.

Note: If at any time during the charging process you should want to check the state of charge, please power off the vehicle. The high voltage battery state of charge will be displayed in the message centre in the instrument pack.

Scheduled Charging

The user can schedule the charging time through the mobile APP .

Note: Scheduled Charging is only available for users who have bound to private charging station. This featureis not available without installing a personal charging station.

Charging Information

When charging starts, the charging information will be displayed on the instrument pack.

Note: The information displayed on the instrument pack may vary with different types of vehicles.

Equalisation Charging

Equalisation charging means the battery management system realises basically the same voltage of all battery cells after charging, so as to ensure the overall performance of the high-voltage battery pack.

Charging Time

Charging time of high-voltage battery pack is related to many factors, such as current electric quantity, charging mode, ambient temperature and charging device power.

Fast Charging Time

Different fast charging devices have different fast charging times.

Note: Ambient temperatures have an effect on charging times. It may take longer to complete a charge when the ambient temperatures are low or high.

Indicative Charging Time for Battery Pack Type I (49kWh)

Fast charging		From alarm (20%) status to 80% , it takes about 30 minutes		
Slow charging	Residential power source	From alarm status to 100%, it takes about 20 hours	From alarm status to 100% and equalisation, it takes about 21 hours	It takes about 22 hours to complete equalisation charge before the first use of a long-time parked vehicle
	AC charging pile (single phase power, about 6.6KW)	From alarm status to 100%, it takes about 8.5 hours	From alarm status to 100% and equalisation, it takes about 10.5 hours	It takes about 11.5 hours to complete equalisation charge before the first use of a long-time parked vehicle

Indicative Charging Time for Battery Pack Type 2 (62.2kWh)

Fast charging		From alarm (20%) status to 80% , it takes about 40 minutes		
Slow charging	Residential power source	From alarm status to 100%, it takes about 28 hours	From alarm status to 100% and equalisation, it takes about 29 hours	It takes about 30 hours to complete equalisation charge before the first use of a long-time parked vehicle
	AC charging pile (single phase power, about 6.6KW)	From alarm status to 100%, it takes about 10 hours	From alarm status to 100% and equalisation, it takes about 11.5 hours	It takes about 13 hours to complete equalisation charge before the first use of a long-time parked vehicle

Indicative Charging Time for Battery Pack Type 3 (64kWh)

Fast charging		From alarm (20%) status to 80% , it takes about 45 minutes		
Slow charging	Residential power source	From alarm status to 100%, it takes about 20 hours	From alarm status to 100% and equalisation, it takes about 21 hours	It takes about 22 hours to complete equalisation charge before the first use of a long-time parked vehicle
	AC charging pile (single phase power, about 6.6KW)	From alarm status to 100%, it takes about 9 hours	From alarm status to 100% and equalisation, it takes about 10 hours	It takes about 11 hours to complete equalisation charge before the first use of a long-time parked vehicle
	AC charging pile (three phase power, about 11KW)	From alarm status to 100%, it takes about 6.5 hours	From alarm status to 100% and equalisation, it takes about 7.5 hours	It takes about 8.5 hours to complete equalisation charge before the first use of a long-time parked vehicle

Note: The information displayed on the Instrument Pack is only a guide.

Note:

Alarm status refers to the high voltage batterylow warning displayed in the instrument pack messagecentre. 100% refers to the high voltage battery stateof charge displayed in the instrument pack messagecentre. Parked or stored status refers the vehicle hasbeen parked or stored for a long time.

Discharging

The vehicle is equipped with a discharge function, this can covert the high voltage DC power in the high-voltage battery pack into domestic AC power.

This discharge function can be realized by using a discharge kit.

Note: Users have the opportunity to purchase the discharge kit from an MG Authorised Repairer.

To use the discharge function, follow the instructions below:

1 Unlock the vehicle and access the AC charging port (the charging port is also the discharging port).

2 Insert the discharge gun connector into the discharge port socket. When fully connected the discharge port indicator will illuminate blue.

3 Access the energy management interface in the infotainment display screen, ensure the cut-off power limit of discharge is set. After setting, click the start discharging button, the electronic lock will lock the discharge gun in place and the vehicle will enter the discharge state. At this time, do not attempt to remove the discharge gun using force, this will damage the locking mechanism.

4 The user is able to click the stop discharging button in the infotainment display screen to stop the discharge, or stop the discharge after the power is discharged to the set cut-off value. At this time the electronic lock will automatically be released and the discharge gun can be removed.

5 Make sure there is no debris or foreign matter in the charging port, fit the charging port cover and close the charging point door.

Note: After the vehicle starts discharging, if the infotainment display goes off, the vehicle will still maintain the discharging condition.

Note: The current power status and available driving range can be displayed on the instrument cluster.

Note: During the discharge process, the user can still set the discharge power cut-off point.

Note: During discharge, the vehicle cannot be placed in "READY" mode.

Note: Using the discharge function will reduce the driving range of the vehicle.

IMPORTANT
• Before beginning the discharge operation, check the condition of the discharge connector and gun. • If it is necessary to use the discharge function on wet days, please pay particular attention in protecting the discharge port area and discharge gun from water, rain or snow. • In cases of abnormal phenomena such as peculiar smells, smoke emission or overheating etc during the discharge process, the electrical circuit MUST be disconnected immediately and the discharge operation stopped.

Battery Safety Information

Batteries pose potential risks, and appropriate protective measures must be taken during operation and maintenance!

Only the correct tools and suitable protective equipment must be used when handling batteries!

Maintenance of batteries must only be performed by individuals with approved certification, specialized battery knowledge and the correct safety training!

Failure to adhere to any of the above warnings may result in severe accidents or even death!

WARNING

The keys supplied with your vehicle contain coin / button batteries. These batteries are hazardous and MUST be kept away from children(whether the battery is new or used).

WARNING

A lithium coin / button battery can cause SEVERE or FATAL injuries within 2 hours or less if it is swallowed or placed inside any part of the body.

WARNING

If you think batteries may have been swallowed or placed inside any part of the body, please seek medical attention immediately.

High Voltage Battery Pack

The high voltage battery pack contains several lithium-based battery cells and high voltage wiring harness.

Please refer to the following infomation and requirments.

- **High Voltage Safety：**

  1 ONLY qualified personnel are allowed to work with the high voltage system - there is danger of DEATH.

  2 DO NOT attempt to dismantle any area of the high voltage or battery system, suitably trained professional staff must observe insulation safety protection measures before working on or near the high voltage system.

  3 Arbitrary disposal may cause pollution, hazard and damage to the environment.

  4 Short circuit of the positive and negative terminals of the battery is strictly prohibited, it will lead to strong current and high temperatures, this may cause personal injury or even fire. Since the positive and negative terminals of the battery are exposed within a plastic protective casing, sufficient safety measures must be taken during the assembly and connection of the battery system to prevent short circuits.

  5 Incorrect electrical connections may cause overheating during battery usage.

- **Transportation:**

  The high voltage battery pack is classed as a Category 9 hazardous material and must be transported by vehicles qualified in transporting Category 9 hazardous materials.

- **Storage:**

  Batteries should be stored at room temperature and in a dry environment. They must be kept away from dangerous areas and objects, such as flammable materials and sources of heat and water.

- **Recycling:**

  The high voltage battery pack MUST be recycled by a manufacturers Authorised Repairer or a professional approved dismantling agent.

12V Lead-acid Battery

- DO NOT attempt to disassemble or modify without authorization.

- DO NOT short-circuit or reverse the positive and negative terminals.
- Keep away from children. Never use a battery that shows signs of damage, leakage or is swollen.
- DO NOT tilt or invert the battery.

Portable Batteries (button type, cylindrical, built-in batteries, etc.)

All batteries contain volatile substances, such as lithium metal, organic electrolytes and other chemical substances. Improper use and operation may cause the battery to heat up, catch fire or even explode, and there is a risk of personal injury or damage. Therefore, to prevent accidents when handling batteries, the following precautions must be followed.

- Keep batteries away from children, if a battery is swallowed please seek medical attention immediately.
- DO NOT short circuit and never connect a battery using reverse polarity.
- DO NOT forcibly discharge, squeeze, puncture or burn the battery.
- DO NOT dismantle the battery.
- A failed or discharged battery should be removed from the vehicle or appliance and disposed of according to local laws or handed to professional recycling institutions.
- DO NOT mix different types of batteries.
- DO NOT expose the battery to high temperature environment. Always keep away from fire.
- DO NOT attempt to solder directly onto a battery post or terminal.
- Store and install the battery in it's original packaging or position to avoid any possibility of external short circuit.
- DO NOT store the battery in an Electrostatic Discharge (ESD) bag or foam.
- DO NOT store batteries on metal surfaces, always ensure there is adequate insulation.
- DO NOT stack batteries or mix battery types when storin.

Brief Introduction to Vehicle Functions

Instrument Pack 50

Warning Lamps and Indicators 54

Lights and Switches 65

Wipers and Washers 72

Horn 76

Rearview Mirrors 77

Windows 80

*Sunroof** 83

Sunvisor 88

Interior Lighting 89

Power Socket 91

*Wireless Charging System for Mobile Phones** 93

Storage Compartments 95

Cup Holder 98

Instrument Pack

Instrument Pack - Colour Display

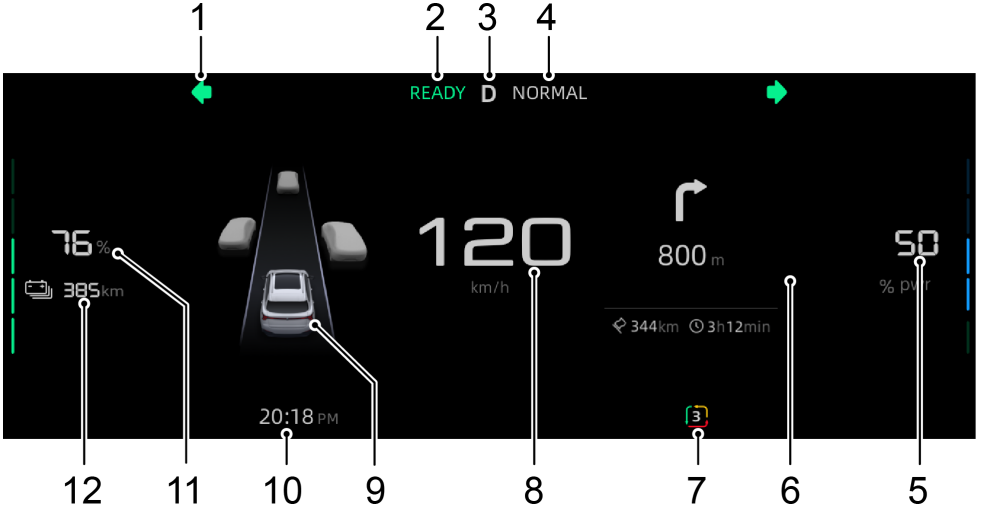

1 Warning Lamps and Indicators

2 Power System State

3 Selected Gear Position

4 Driving Mode

5 Power Usage Meter

6 Message Centre

Displays navigation information, health information, fault centre, messages since start, cumulative messages, etc. The card display options can be set in the Vehicle Settings on the entertainment display.

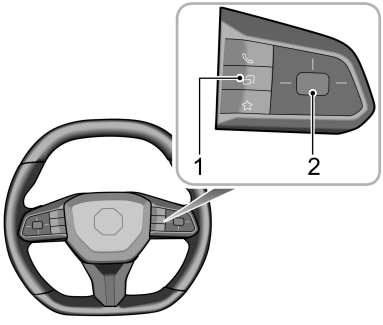

The driver is able to scroll through card messages using (1) on the steering wheel.

Long press the square control button (2) on the right side of the steering wheel to reset any trip data or eliminate any warning or malfunction messages.

7 Kinetic Energy Recovery Mode

8 Vehicle Speed

9 Active Safety card

10 Time

11 Percentage of Residual Power/Battery Capacity

12 Driving Range

Message Centre

The message centre provides the following:

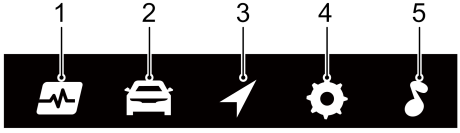

1 Health Centre

2 Trip Computer

3 Navigation

4 Settings

5 Multimedia

Health Centre

- Tyre Pressure Monitoring: displays the current tyre pressure status.
- Low-voltage Battery: displays the 12V battery voltage.
- Warning Message: displays any failure messages or important notes relevant to the current car status..

Trip Computer

The trip computer includes the following:

- Since Start: displays the driving distance, trip time, average speed and average energy consumption since start. When the vehicle is powered off for a period of time, these values will be reset. It can also be reset by long pressing the OK button.
- Since Reset: displays the driving distance, trip time, average speed and average energy consumption since last reset. It can be reset by long pressing the OK button.
- Since charging: displays the driving distance, trip time, average speed and average energy consumption since last charging. It can be reset by long pressing the OK button.
- Total Mileage: displays the total mileage the vehicle has travelled.

Navigation

Displays any navigation messages from the infotainment system.

Settings

- Backlight Adjustment: displays and adjusts backlight brightness.
- Speed Limit Settings: sets the speed limit value for overspeed warning.

Multimedia

Displays any multimedia messages from the infotainment system.

Warning Message

The instrument pack displays any warning messages via a pop-up box. The warning messages are mainly classified into:

- Operation Instructions
- System State Prompts
- System Malfunction Alert

Please follow the text prompts or refer to the relevant control system sections for the failure causes and appropriate solutions.

Warning Lamps and Indicators

When the vehicle is starting or traveling, if the warning lamps or indicators appear in the instrument cluster, it indicates that the relevant system is in a certain state or is faulty. Some warning lamps illuminate or flash accompanied by warning tones or prompt messages.

Please carefully read the following instructions to understand the meaning of relevant warning lamps and indicators. In case of a failure, please take corresponding measures in time and contact an SAIC Authorised Repairer for service as soon aspossible.

Name	Icon	Note
Dipped Beam Indicator		Dipped beam headlamps are on.
Main Beam Indicator		Main beam headlamps are on.
Smart High Beam Indicator*		Smart high beam is enabled.
Side Lamp Indicator		Side lamps are on.

Rear Fog Lamp Indicator		Rear fog lamps are on.
Direction Indicator Lamp		When the left or right turn signal lamp flashes, the direction indicator lamp on the corresponding side also flashes. If the hazard warning lamps are turned on, both direction indicator lamps will flash simultaneously. If either direction indicator lamp in the instrument pack flashes very rapidly, it indicates the turn signal lamp on the corresponding side has failure.
Airbag Warning Lamp		A fault has been detected in the SRS or seat belt. Stop the car as soon as safety permits and power off the vehicle. Otherwise there may be a risk that SRS system or seat belt cannot work properly if an accident occurs.
Seat Belt Unfastened Warning Lamp		If this lamp illuminates or flashes it indicates that the seat belt for an occupied front or rear seat remains unfastened.
Anti-theft System Warning Lamp		If this lamp illuminates, it indicates that no valid key is detected, in which case please use the correct key, or put the smart key in the standby starting position. For details, refer to "Standby Starting Procedure" in "Driving" chapter.

Tyre Pressure Monitoring System (TPMS) Warning Lamp		If this lamp illuminates, it indicates that the tyre pressure is low. Please check the tyre pressures. If this lamp flashes and then remains ON after a period of time, it indicates that the system has a detected a fault.
Electric Power Steering System (EPS) Warning Lamp		If this lamp illuminates, it indicates that the electric power steering system has a general failure, and its performance is reduced. The vehicle can be driven for a short period of time. Please seek an MG Authorised Repairer immediately.
		If this lamp illuminates, it indicates that the electric power steering system has a general failure relevant to the steering angle. The vehicle can be driven for a short period of time. Please seek an MG Authorised Repairer immediately. If this lamp flashes, it indicates that the electric power steering system has a severe failure, making it hard to steer. Stop the car as soon as safety permits and contact an MG Authorised Repairer immediately.
Dynamic Stability Control/Traction Control System Warning Lamp		If this lamp illuminates, it indicates that the dynamic stability control system/traction control system has failed. If this lamp flashes while driving, it indicates that the system is operating to assist the driver.

Dynamic Stability Control/Traction Control System OFF Warning Lamp		The dynamic stability control/traction control system is turned off.
Electronic Parking Brake (EPB) System Status Indicator Lamp		If this lamp illuminates, it indicates that the EPB is enabled. If this lamp flashes, it indicates that the vehicle is parked on a slope with an excessive angle or the electronic parking brake system failed, in which case please park the vehicle on the safe road surface.
Electronic Parking Brake (EPB) System Malfunction Indicator Lamp		It indicates that the EPB system has a failure.
AUTO HOLD System Warning Lamp		The auto hold function is activated.
		The auto hold function failed.
		The auto hold function is in Standby state. ***Note: The lamp is displayed in a dark color in daylight mode.*** ***Note: The lamp is displayed in dark color in daylight mode.***

Hill Descent Control (HDC) ON/Malfunction Indicator Lamp		If this lamp illuminates, it indicates that the HDC system is in the Standby mode. If this lamp flashes, it indicates that the system is currently under the control of HDC.
		HDC relevant system failed.
Brake System Malfunction Indicator Lamp		The brake system has a failure; please stop the car as soon as safety permits and power off the vehicle.
ABS Malfunction Indicator Lamp		The ABS failed. If an ABS failure occurs while driving, the ABS function will be disabled while normal braking will still be available.
Charging Connection Indicator		The charging/discharging gun is connected.

Low-voltage Battery Charging System Malfunction Warning Lamp		If this lamp illuminates after starting the car, it indicates that a low 12V battery voltage charging system failed. If this lamp flashes, it indicates low battery, and the prompt message will appear in the instrument pack. Then the system will restrict or turn off some electrical appliances. Please start the vehicle in a timely manner to charge the low-voltage battery.
Drive Motor Malfunction Indicator Lamp		If this lamp illuminates, it indicates a general failure with the motor system.
		If this lamp flashes, it indicates that the motor system has failed. Please stop the vehicle as soon as safety permits and contact an MG Authorised Repairer.
READY Indicator		The vehicle is ready for driving.
Drive Power Restricted Indicator		The drive power is restricted.

Power Battery Malfunction Indicator Lamp		If this lamp illuminates, it indicates a severe failure with the power battery system. Please stop the vehicle as soon as safety permits, power off the vehicle and contact an MG Authorised Repairer for service immediately. If this lamp flashes, it indicates a thermal runaway warning. Please stop the vehicle as soon as safety permits, power off the vehicle, leave the vehicle immediately, and contact an MG Authorised Repairer for service.
		If this lamp illuminates, it indicates a failure with the power battery system. Please contact an MG Authorised Repairer for service as soon as possible.
Power System Malfunction Indicator Lamp		A general failure has occurred in the power system and its functions are limited.
		The power system has a severe failure; please stop the car as soon as safety permits and power off the vehicle.

Charging/Discharging Status Indicator		It indicates charging/discharging failure.
		The vehicle is being charged.
		The vehicle is being discharged.
System Failure Message Indicator		The vehicle has some stored warning messages; please refer to "Message Centre" for failure information or important notes. Refer to "Instrument Pack" in this chapter.
Constant Speed Cruise Control System Indicator Lamp*	NNN	The constant speed cruise control system is in the Standby state. ***Note: The lamp is displayed in a dark color in daylight mode.***
	NNN	The constant speed cruise control system is activated.

Adaptive Cruise Control System Indicator*	NNN	The adaptive cruise control system is activated and not in the Standby state.
	NNN	The adaptive cruise control system is in the Standby state. ***Note: The lamp is displayed in a dark color in daylight mode.***
	NNN	The adaptive cruise control system is activated.
Speed Limit Assistance System Indicator*	LIM NNN	Manual speed limit assistance system is in the Standby state. ***Note: The lamp is displayed in a dark color in daylight mode.***
	LIM NNN	If this lamp illuminates, it indicates that the manual speed limit assistance system is activated. If this lamp flashes, it indicates that current speed is greater than the speed limit value.
	LIM AUTO	The intelligent speed limit assistance system is in the Standby state. ***Note: The lamp is displayed in a dark color in daylight mode.***
	LIM AUTO	The intelligent speed limit assistance system is activated.

Cruise/Speed Limit System Malfunction Indicator Lamp		The constant speed cruise control system, adaptive cruise control system or speed limit assistance system has failed.
Speed Limit Sign Speed Indicator*	NNN	" NNN " indicates the speed limit sign speed currently identified. When the vehicle speed is greater than the speed limit value, the lamp will flash.
Intelligent Cruise Assist System Indicator*		The intelligent cruise assist system is on and not in the Standby state.
		The intelligent cruise assist system is in the Standby state. ***Note: The lamp is displayed in a dark color in daylight mode.***
		The intelligent cruise assist system is activated.
		The intelligent cruise assist system has malfunctioned.

Lane Keeping Assist System Indicator *		The lane keeping assist function is activated.
		The lane keeping assist function has detected a fault..
Forward Collision Assist System Indicator*		Function is enabled, and this lamp stays on; function is activated, if this lamp flashes; function is disabled, and this lamp still stays on, it indicates a forward collision warning system failure.

Lights and Switches

Master Light Switch

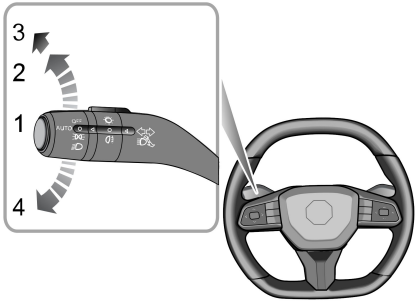

1 AUTO Lamp

2 Side Lamp/Switch Backlights

3 Headlamp

4 AUTO Lamp Off

AUTO Lamp

When the vehicle is powered on, the AUTO lighting system is on by default (position 1), and the system will automatically operate the dipped beam headlamps, side lamps, switch illumination and backlights according to the intensity of current ambientlight.

Note: This function is realized by a sensor mounted in your vehicle to monitor the exterior light levels in real time. It is installed in the interior rearview mirror base. DO NOT mask or cover this area. Failure to adhere to this may result in the headlamps being turned on unnecessarily.

Side Lamp/Switch Illumination and Backlights

When the vehicle is powered on, turn the master light switch to position 2 to switch on the side lamps/daytime running lamps, switch illumination and backlights.

Headlamp

When the vehicle is powered on, turn the master light switch to position 3 to switch on the dipped beam headlamps, side lamps, switch illumination and backlights.

AUTO Lamp Off

Turn the master light switch to position 4 to deactivate the AUTO lamps function. Releasing the switch will return it to position1 automatically.

Daytime Running Lamp

When the vehicle is powered on and P (Park) is not selected , the daytime running lamps illuminate automatically. When the dipped beam is turned on, the daytime running lamps go out automatically.

Welcome Light

When the vehicle is unlocked, the system will automatically operate the corresponding exterior lights to provide a welcome effect. The welcome lights can be set in the Settings interface on the intelligent display.

Follow Me Home

After the vehicle is locked, the system will automatically operate the corresponding exterior lights for a period of time to illuminate your way home. The Follow Me Home function can be set in the Settings interface on the intelligent display.

Headlamp Levelling Adjustment

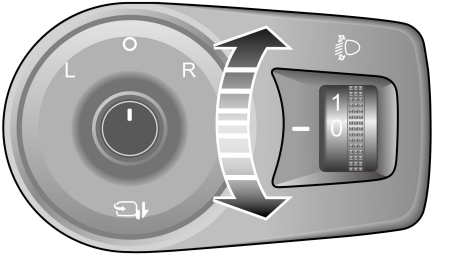

The headlamp levelling can be adjusted as per the following table according to the vehicle load.

Location	Load
0	Driver, or driver & front passenger
1	All the seats occupied with no load in the boot
2	All the seats occupied plus an evenly distributed load in the boot
3	Driver only, plus an evenly distributed load in the boot

Main Beam Switch

Take care not to dazzle oncoming vehicles when switching between the main and dipped beams.

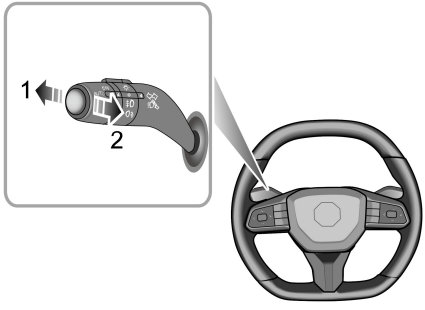

Switching between High / Low Beam

When the vehicle is powered on and the dipped beam headlamps are illuminated, push the light lever stalk towards the instrument panel to turn on the main beams, and the main beam indicator on the instrument pack

illuminates. Push or pull the lever once again to switch back to dipped beams.

High Beam Flash

To briefly flash the high beam lamps, pull the lever towards the steering wheel (2) and the release.

Smart High Beam System

The Automatic High Beam serves only as an auxiliary function. The driver must check the status of the front lamps and turn on the front lamps when necessary.

The Automatic High Beam may not operate normally in the following cases, operation is not limited to the following and so the main and dipped beams should be switched manually:

- ***The windscreen is dirty, broken or obstructed by other objects blocking the view of the sensor.***
- ***The headlamps of other vehicles are obstructed or blocked and cannot be detected.***
- ***When pedestrians, non-motor vehicles and other objects with no obvious light or reflected light are encountered.***
- ***When the headlamps and tail lamps of other vehicles cannot be detected due to the sensor view being impaired due to undulating road conditions such as bends, dips or hills.***
- ***When the car is driving on a winding road or mountainous road.***
- ***The wiper switch is in the 'Fast Wipe' position.***

The smart high beam system can detect the light intensity of the vehicle ahead using the front view camera, and the high beams can be turned on or off once certain conditions are met. When the smart high beam system is enabled, the smart high beam indicator on the instrument pack illuminates.

With the automatic control, when it is dark and there is no vehicle in the surroundings, the system will turn on the high beams automatically; when it is quite bright or the system detects headlamps or tail lamps ahead, the system will turn off the high beams automatically.

To enable the smart high beam system, the following conditions should be met:

1 The light switch is placed in the "AUTO" position and the dipped beam headlamps are on.

2 The vehicle is running with the speed exceeding 25 mph (40 km/h).

If any of the following conditions are met, the vehicle will automatically exit the smart main beam system. If the system is disabled, pushing the main beam ON switch twice quickly towards the instrument panel will enable the smart main beam system again. The smart main beam system will not be enabled in the current start cycle if it has exited over 3 times:

- When the smart main beam system is enabled and the dipped beam lights are automatically turned on and the lighting system is manually switched to the main beam lights.
- When the smart main beam system is enabled and the main beam lights are automatically turned on and the lighting system is manually switched to the dipped beam lights.
- When the smart main beam system is enabled, the main beam lights are automatically turned on and the main beam flash switch is operated.

IMPORTANT
The Automatic High Beam function uses data from the front view camera, always keep the windscreen clean and free from residue in this area to maintain optimum performance of this system. Any damage in this area such as stone chips must be repaired at the earliest convenience.

Direction Indicator Switch

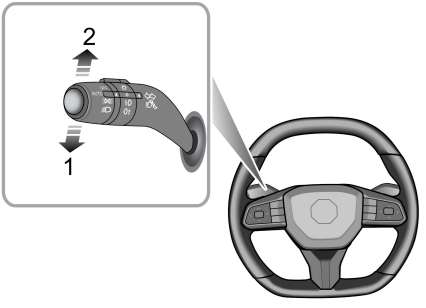

When the vehicle is powered on, move the light lever switch up or down to operate the turn signal lamp. The corresponding GREEN indicator lamp in the instrument pack will flash when the turn signal lamps are working.

After rotating the steering wheel, the lever will be automatically reset to the middle position, and the turn signal lamp goes off. But if the steering wheel rotation angle is small, manually reset the lever to turn off the turn signal lamps.

If briefly moved and released, the lever will reset immediately. The turn signal lamps and direction indicator lamps will flash three times and then go out.

Fog Lamps

In severe conditions (during foggy weather for instance), the fog lamps can provide additional light and improve the visible range. Do not use the fog lamps in clear conditions as this will dazzle pedestrians and/or other road users.

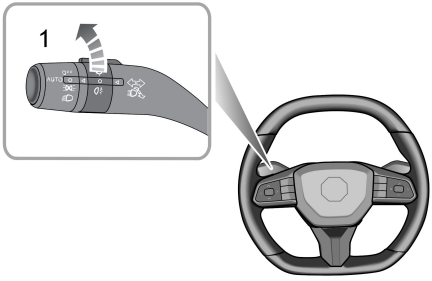

Rear Fog Lamps

When the headlamps are turned on, turn the switch to position 1 to turn on the rear fog lamps. With rear fog lamps on, the indicator on the instrument panel illuminates.

Hazard Warning Lamps

Press the hazard warning lamp button ⚠ to turn on the hazard warning lamps. All turn signal lamps and direction indicator lamps will flash. Press the button again to switch off the hazard warning lamp. All turn signal lamps and direction indicator lamps will stop flashing.

Wipers and Washers

Front Windscreen Wiper and Washer Operation

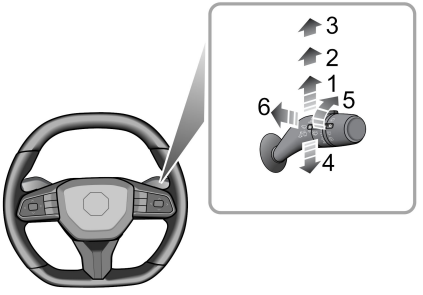

- Intermittent / Automatic Wipe (1)
- Slow speed wipe (2)
- Fast speed wipe (3)
- Single wipe (4)
- Automatic wipe delay adjustment/Rain sensor sensitivity adjustment*(5)
- Wash and wipe (6)

Intermittent / Automatic Wipe

Automatic Wipe

By pushing the lever up to the Intermittent / automatic wipe position (1), the wipers will operate automatically.

For models without rain sensor, turn the switch (5) to adjust the automatic wipe delay time. This delay period will also change with the vehicle speed. As the vehicle speed increases, the wiping interval decreases. As the vehicle speed decreases, the wiping interval increases.

For models with rain sensor, turn the switch (5) to adjust the sensitivity of rain sensor. The higher the sensitivity, the shorter the wiping interval. The rain sensor is located in the interior rearview mirror base to detect varying amounts of rain water outside. As with automatic wipe, the vehicle will adjust the wiping delay period according to the signals provided by rain sensor.

Note: When the sensitivity of rain sensor is increased, the wiper will wipe once immediately; if the rain sensor detects continuous rainwater, the wiper will keep working. When no rain is detected, it is recommended to switch off automatic wipe.

Slow Speed Wipe

By pushing the lever up to the slow speed wipe position (2), the wipers will operate slowly.

Fast Speed Wipe

By pushing the lever up to the fast speed wipe position (3), the wipers will operate at fast speed.

Single Wipe

Pressing the lever down to single wipe position (4) and releasing will operate a single wipe. If the lever is held in the single wipe position (4), the wipers will operate continuously until the lever is released.

Note: When the car is stationary, if the bonnet is opened, the front wiper/washer operation will be disabled.

IMPORTANT
• Avoid operating the wipers on a dry windscreen. • In freezing or extremely hot conditions, make sure that the wiper blades are not frozen or adhered to the windscreen. • In winter, remove snow or ice from around the wiper arms and blades, including the wiped area of the screen.

Front Windscreen Wash and Wipe

Pulling the lever toward the steering wheel (6) will operate the front windscreen washers. After a short delay, the wipers will commence operating in conjunction with the washers.

Note: The wipers continue operating for three wipes after the lever switch is released. After several seconds, there will be a further wipe to remove any washer fluid from the windscreen.

IMPORTANT
If the washers fail to deliver the screen wash solution (dirt or ice may have blocked the jets), release the lever immediately. This will prevent the wipers from operating and the consequent risk of visibility being impaired by dirt smearing across the unwashed windscreen.

Rear Windscreen Wiper and Washer Operation

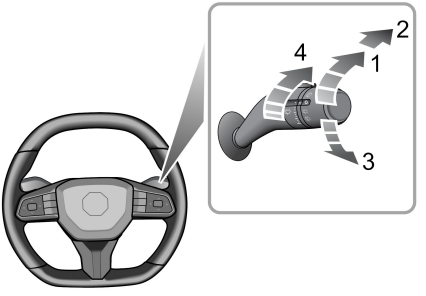

When the vehicle is powered on, operate the rotational switch to select different wipe speeds.

- Intermittent wipe (1)
- Wipe and wash (2 or 3)
- Wipe interval adjustment (4)

Intermittent Wipe

If the rear wiper switch is turned to intermittent wipe (1), the rear wipers will operate. It will complete 3 continuous wipes before changing to intermittent mode. The wiping interval can be adjusted via the switch (4).

Wipe and Wash

Turn the rear wiper switch to the wipe and wash (2) position and hold. The rear wipers and washer will operate together, and the rear wiper will move fast. If the switch is released to intermittent wipe (1) position, the rear washer will stop operating.

Turn the rear wiper switch to the wipe and wash (3) position and hold. The rear wiper and washer will operate together. If the switch is released to off position, the rear wiper and washer will stop operating. After several seconds, there will be a further wipe to remove any fluid draining down the windscreen.

Note: When the tail gate is opened, rear wiper operations will be disabled.

Note: If the windscreen wipers are switched on and Reverse (R) gear is selected, the rear wiper will operate.

Horn

Press the horn button area on the steering wheel (as indicated by the arrow) to operate the horn.

Note: The vehicle horn button areas and the driver's airbag are located in close proximity on the steering wheel. The illustration shows the position of the horn (indicated by the arrows). Please ensure that you press in this area to avoid any potential conflict with the operation of the airbag.

IMPORTANT
To avoid possible SRS issues, please do not press with excessive force or hit the airbag cover when operating the horn.

Rearview Mirrors

Exterior Rearview Mirrors

The exterior rearview mirrors, as the widest parts mounted on the vehicle, are especially vulnerable in any collision event. The exterior rearview mirrors feature a manual or electric folding function, this helps avoid damage and allows folding when manoeuvring through narrow passages.

In addition to the folding function, each exterior rearview mirror features electric angle adjustment and heating elements, which can effectively remove frost or mist on the mirror.

Note: The vehicles or objects behind when viewed in exterior rearview mirrors may appear further away than they actually are.

Manual Folding*

For vehicles equipped with manually folded exterior rearview mirrors, the exterior rearview mirrors can only be folded backwards manually, and pushed towards the front of the vehicle to restore.

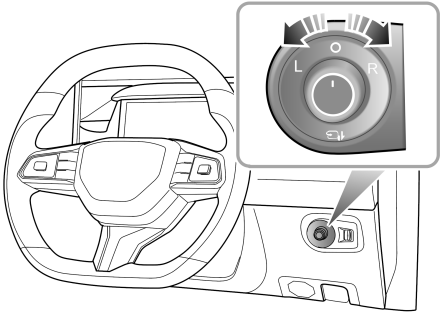

Electric Adjustment of Mirrors

The exterior rearview mirror glass adjustment switch is located on the instrument panel on the driver's side.

- Rotate the round knob in the middle to select left (L) or right (R) mirror.
- Move the knob in the desired direction to adjust the angle of the exterior rearview mirror glass, and realize its electric adjustment function.

Electric Folding*

When the vehicle is powered on, rotate the round knob to O position, and move the knob down to realize the electric folding function of the exterior rearview mirrors. Moving the knob downwards again will return the mirrors to their original position.

Note: While unlocking/locking the vehicle, the exterior rearview mirrors will be deployed/folded automatically.

Note: For vehicles equipped with electrical folding door mirrors, if the mirrors have been moved from their positions by manual or accidental means, they can be reset by operating the knob to complete fold and deployment one time.

Mirror Glass Heating

The exterior rearview mirrors have integral heating elements which can disperse frost or mist from the glass.

The heating function of the mirror glass is started in conjunction with the heated rear windscreen, that is, only when the vehicle is powered on, and the heated rear windscreen is turned on, will the heating function of the exterior rearview mirrors work.

IMPORTANT
• The electric adjustment and regulation of mirrors are operated using the electric switch, operating them directly by hand may result in the failure of related devices. • Washing or flushing door mirrors with high pressure water jets or car washes may result in electrical motor failure.

Interior Rearview Mirrors

Adjust the body of the interior rearview mirror to achieve the best possible view. The anti-dazzle function of the interior rearview mirror helps reduce glare from the headlamps of following vehicles at night.

Manual Anti-dazzle Interior Rearview Mirror

Move the lever at the base of the interior rearview mirror to change its angle, so as to achieve the anti-dazzle function. Normal visibility is restored by pulling the lever back again.

Note: In some circumstances, the view reflected in a 'dipped' manual mirror can confuse the driver as to the precise location of following vehicles.

Windows

Please operate the windows correctly to avoid danger, the driver should instruct the occupants on the use of windows and safety precautions.

Ensure children are kept clear when raising or lowering a window.

DO NOT operate the power window controls continuously in a short time frame, otherwise the power window controls maybe disabled to protect the motor. If this occurs, please wait a few seconds until the motor cools down. Do not disconnect the negative battery during this time.

Power Operated Window Switch

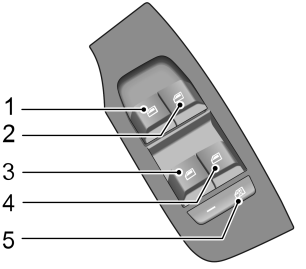

1 Front Left Window Switch

2 Front Right Window Switch

3 Rear Left Window Switch

4 Rear Right Window Switch

5 Rear Window Disabled Switch

Window Operation

The power windows can be operated when the vehicle is powered on (Doors should be closed during operation).

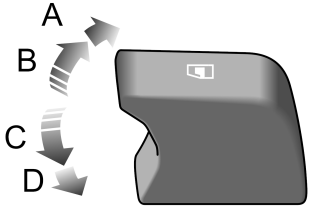

Press the window control switch (1 ~ 4) down to the 1st position (Position C) to lower the window and pull the switch up to the 1st position (Position B) to raise the window. The window will stop moving as soon as the switch is released.

"One-touch" Down

Press the window control switch (1 ~ 4) down to the 2nd position (Position D) and release, the window automatically descends to fully open. Window movement can be stopped at any time by operating the corresponding switch again during descent.

"One-touch" Up and "Anti-pinch"

Some windows may have the "One-touch" up function. Lifting the switch to the 2nd position (Position A) and releasing will automatically close the window completely. Window movement can be stopped at any time by operating the corresponding switch again during ascent.

The 'Anti-pinch' function is a safety feature which stops the window from ascending and make it descend automatically a certain distance if an obstacle is sensed, then you can remove the obstacle.

Note: The front and rear passenger windows can also be operated by the individual window switch mounted on each door. If the rear window isolation switch has been activated, the window switches on rear doors will not work.

Rear Window Disabled Switch

Press the switch (5) to disable the rear window controls (an indicator lamp in the switch illuminates), and press again to restore control.

Note: If the battery is de-energized during the window lifting and lowering process, the 'one-touch' up and 'anti-pinch' mode will be suspended. When the battery is energized again, lift the switch briefly and continuously to raise the window to the top and hold the switch in the close position continuously for about 5 seconds, the 'one-touch' up and 'anti-pinch' mode will be recovered.

Sunroof*

The sunroof assembly consists of two pieces of glass of which the front glass can be opened by sliding or tilting, the rear glass is fixed and cannot be opened; and a sunshade which can be opened by sliding.

Instructions for Use

Please operate the sunroof correctly to avoid danger. The driver should instruct the occupants on the use of the sunroof and safety precautions.

If there are children in the vehicle, ALWAYS power off the vehicle when temporarily leaving the vehicle - this will prevent children from accidentally operating the sunroof and causing danger.

DO NOT allow passengers to lean out of an open sunroof whilst the vehicle is in motion. Injuries may occur from objects such as tree branches.

Safety of the vehicle occupants must be observed at all times. DO NOT allow limbs to be placed in the moving path of the sunroof at any time, injury may occur.

Note: DO NOT place heavy objects on or around the sunroof.

- Do not open the sunroof in poor weather conditions;
- Try to avoid opening the sunroof at high speed;
- Open the sunroof only after the water on the sunroof glass has been cleared, otherwise there may be water dripping down while opening the sunroof;
- Clean the glass with cleaning solvents such as alcohol;
- Upon completion of the sunroof operation, release the switch in good time. Otherwise it may result in failure;
- To ensure the sunroof functions normally, please clean it frequently and go to an MG Authorised Repairer for service as required.

Sunroof Operation

When the vehicle is powered on, the sunroof can be operated.

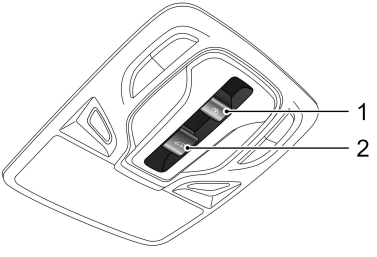

The sunroof switch is located on the roof lining above the windscreen. Depending on different configurations, the styles of the roof console are different, but the sunroof switches are in the same position. The opening methods of the sunroof can be identified according to the switch symbols. Switch 1 will be used to operate the sunroof sunshade, and switch 2 will be used to operate the sunroof glass.

Sunroof Glass Operation

Open by Tilting

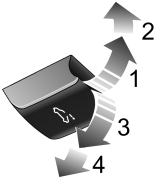

Push up the sunroof glass switch to position 1 and hold. The sunroof will be manually opened by tilting. Sunroof operation can be stopped at any time by releasing the switch.

Push up the glass switch to position 2 and release, this will allow the sunroof to open completely automatically.

Close by Tilting

Pull the sunroof glass switch down to position (3) and hold, the sunroof will close. Sunroof movement can be stopped at any time by releasing the switch.

Pull the glass switch down to the 2nd position (4) and then release, the sunroof will be fully closed automatically.

Open by Sliding

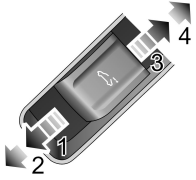

Push the sunroof glass switch backward to position (3) and hold, this will allow the sunroof to slide open manually. . Sunroof movement can be stopped at any time by releasing the switch.

Push the glass switch backward to position 4 and release, this will allow the sunroof to completely open automatically. Sunroof movement can be stopped at any time by pushing the switch backwards again.

Close by Sliding

Push the sunroof glass switch forward to position (1) and hold, this will cause the sunroof to close manually. Sunroof movement can be stopped at any time by releasing the switch.

Push the glass switch forward to position (2) and then release, this will allow the sunroof to close automatically. Sunroof movement can be stopped at any time by pushing the switch frontwards again.

Note: Because the sunroof glass motor is steplessly regulated, in order to prevent the glass from being not closed completely due to the error of visual perception, it is recommended to use the second gear for automatic closing when the sunroof glass needs to be closed completely.

Sunroof Sunshade Operation

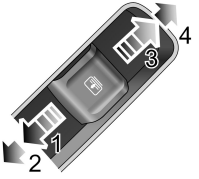

Open

Push the sunshade switch backward to position (3) and hold, this will allow the sunshade to slide open manually. You can stop the movement of the sunshade at any time by releasing the switch.

Push the sunshade switch backward to position (4) and then release, this will allow the sunshade to slide open automatically. You can stop the movement of the sunshade at any time by pushing the switch backward again.

Close

Push the sunshade switch forward to position (1) and hold, the sunshade will close automatically. You can stop the movement of the sunshade at any time by releasing the switch.

Push the sunshade switch forward to position (2) and then release, the sunshade will be fully closed automatically. You can stop the movement of the sunshade at any time by pushing the switch forward again.

Note: If you park the vehicle for a long period of time, it is recommended to close the sunshade; if possible, park the vehicle in a garage to prevent the in-car temperature from rising due to long-time exposure to the sun, this will protect the interior.

'Anti-pinch' Function

During closing/opening operation, the sunroof glass and sunshade will stop closing/opening automatically when the closing resistance has increased due to an obstacle, extreme weather (i.e, temperature below - 20 °C) or other causes; following this will increase longevity of the sunroof movement mechanism.

Forcibly Close the Sunroof Glass

To reset the sunroof in a situation where it cannot be opened, for example, when the anti-pinch function has

been triggered. Push and hold the glass switch forward to position 1 for 5 seconds until the sunroof has closed completely. Please note, the anti-pinch function is not available during this closure process.

Forcibly Close the Sunshade

To reset the sunshade in a situation where it cannot be opened, for example, when the anti-pinch function has been triggered. Push and hold the sunshade switch forward to position 1 for 5 seconds until the sunshade has closed completely. Please note, the anti-pinch function is not available during this closure process.

Linkage between Sunshade and Sunroof Glass

To prevent the sunshade from being exposed, the sunshade will move together when the sunroof glass is opened. To close the sunshade, please close the sunroof glass first.

Sunroof Initialisation

Sunroof operation will be affected by power failure when the sunroof glass or sunshade is in motion, it will be necessary to initialize after power on.

Glass initialisation - Close the sunroof glass completely by pushing the sunroof glass switch forward to position 2 and hold for approximately 10 seconds. The glass will automatically slide open and then close, during which, ensure the switch is kept at position 2 until the sunroof glass has closed.

Sunshade initialisation - Close the sunshade completely by pushing the Sunshade switch forward to position 2 and hold for approximately 10 seconds. The Sunshade will automatically slide open and then close, during which, ensure the switch is kept at position 2 until the sunshade has closed.

Thermal Protection

To prevent the sunroof glass motor and sunshade motor from overheating and further damage; they are provided with a thermal protection function.

When the heat protection is enabled, the sunroof can only be closed and does not respond to other operations. After the motor has cooled down and it exits the thermal protection state, the sunroof can be operated untill the next thermal protection incident.

Sunvisor

For safety reasons, do not use the driver's vanity mirror while driving.

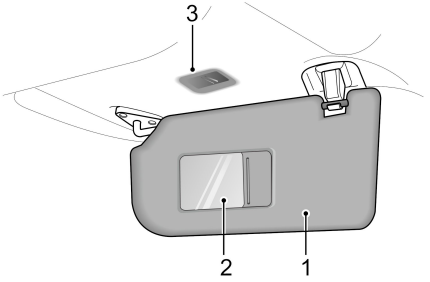

Sunvisors are arranged on the roof ahead of both the driver and the front passenger (1). The sunvisors are provided with vanity mirror (2) and vanity mirror light (3)*.

Pull the sunvisor down to use the vanity mirror. If the roof has vanity mirror lights, the vanity mirror light is switched on when the cover is opened and it is switched off when the cover is closed.

Interior Lighting

Front Interior Lamp

Depending on different configurations, the styles of the roof console is different , The shape of the reading light is consistent ,

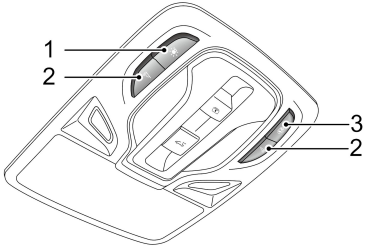

1 Front/Rear Interior Lamp Manual Control Master Switch

2 Corresponding Side Lamp Manual Control Switch

3 Auto Control Switch

Press the master switch 1 to turn on the front and rear interior lamps simultaneously and press the switch again to turn them off.

Press one of the switches 2 to turn on a front interior lamp at corresponding side and press the switch again to turn off the lamp.

In addition to manual switch control of interior lamps, the vehicle is provided with an automatic control function under some scenarios. Press the switch 3 to enable/disable the function.

When the automatic control function is enabled, the front and rear interior lamps will be turned on automatically whenever the followings occur:

- The car is unlocked;
- Any door is opened;
- When the light sensor of the vehicle detects that the ambient light is in dark, the side lamps have been turned off for 30 s the side lamps have been switched on or the start switch has been switched off.

Note: Under normal circumstances, if a door is left open for longer than a certain time, the front and rear interior lamps will go off automatically. In case of low battery voltage, the front and rear interior lights will extinguish in advance.

Rear Interior Lamp*

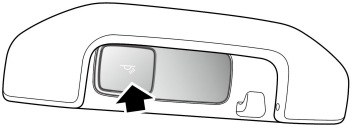

The rear interior lamps are located on the left and right sides of roof lining. Press the switch as arrowed to turn on the lamps and press it again to switch off the lamps.

Power Socket

Please ensure the socket lid is inserted when the power socket is not in use. This will ensure no foreign objects enter the socket preventing its use or cause short circuits.

Using the power socket or USB port when the vehicle is not started will cause premature discharging of the vehicle battery and prolonged use may cause a flat battery, meaning the vehicle cannot be started.

The rated voltage of the 12 V power socket is 12 V, and the maximum power is 120 W, please do not use the electrical appliance with its power exceeding the maximum value.

Front Console Power Socket

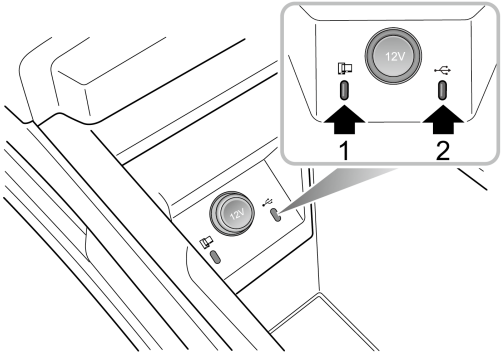

The front console power socket is located inside the armrest box of the centre console and can provide 12V voltage and 10 A current as a power outlet when the vehicle is powered on.

There are also USB ports (1 and 2) equipped on both sides of the 12 V front console power socket, these can either provide 5V voltage when serving as a power outlet, or realise the data transmission function.

Rear USB Port*

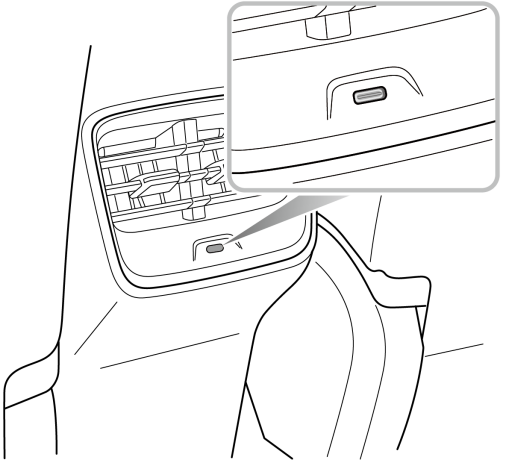

There is a USB port at the rear of the centre console, which can only provide 5V voltage and 3A current as a power outlet after the vehicle is powered on.

USB Port at Interior Rearview Mirror*

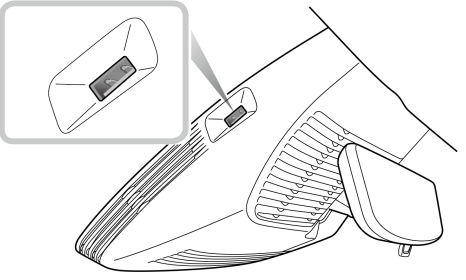

There is a USB port located in the interior rearview mirror base, which can only provide 5V voltage and 2A current as a power outlet after the vehicle is powered on.

Note: The vehicle's USB ports may not support some fast charging devices.

Wireless Charging System for Mobile Phones*

The wireless charging function can realise the charging of certain mobile phones without the use of cables using electromagnetic induction.

Note: It only works with mobile phones certified to the WPC Qi standard.

Wireless Charging of Mobile Phones

The mobile phone wireless charging area is located on the centre console and the charging function can be used after the vehicle is powered on. Place the mobile phone with the correct side up with the back attaching to the charging area for wireless charging.

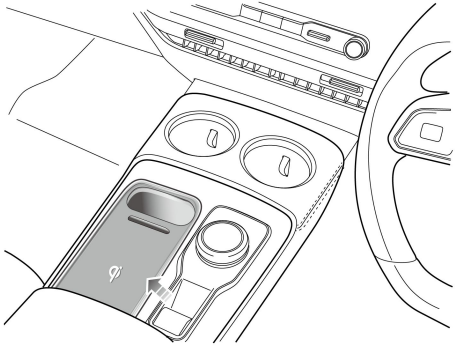

Note: Only one mobile phone can be charged at a time.

Note: For better charging, place the phone completely on the wireless charging panel and align the centre of the phone with the centre of the wireless charger.

Note: When the driver is not in the car, please do not leave your mobile phone to be charged in the car to avoid potential safety hazards.

Note: On bumpy roads, the wireless charging function of the mobile phone may intermittently stop and resume. If the mobile phone deviates from the charging area and stops charging, it will need to be placed back in the rechargeable area.

Note: The size of each brand of mobile phone is different, and the position of the charging coil on the mobile phone is different. Please adjust the position of the mobile phone accordingly. In addition, the case of some mobile phones may have an impact on wireless charging. It may be necessary to adjust or remove the case to achieve wireless charging.

Note: Different models of mobile phones have different charging rates.

If the mobile phone cannot be charged properly, please make sure that there is no foreign matter in the wireless charging area or wait for the wireless charging area to cool down before further attempts. If it still fails, consult an MG Authorised Repairer.

IMPORTANT
When the wireless charging system of the mobile phone is being used, make sure that the smart key is 20cm or more away from the wireless charging area. Do not place coins, IC cards, metal keys or other items with a large amount of metal composition in the wireless charging area with your phone. This may result in the failure of wireless charging function and create a safety hazard.

Storage Compartments

Instructions

- Please close all storage devices when the vehicle is in motion to avoid personal injuries in cases of a harsh acceleration, emergency braking and a car accident.
- DO NOT place liquid or flammable materials such as lighters in any storage compartments to avoid igniting flammable materials, leading to a fire.
- When storing liquid items, please ensure that the liquid is stored in a sealed container to prevent liquid leakage from causing damage to the vehicle. If leakage occurs, please clean it up immediately.

Glove box

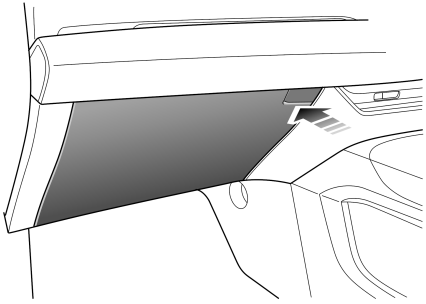

To open the glove box, press the open button (as indicated by the arrow). Push the lid forward to close the glove box.

Make sure the glove box is fully closed when the vehicle being driven.

Storage Boxes

Centre Console Armrest Box

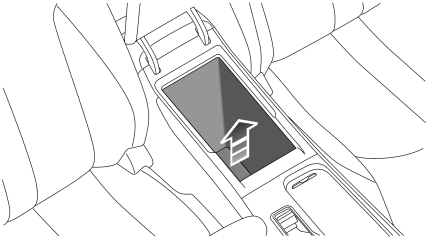

Lift the centre console armrest (as indicated by the arrow) to open the centre console armrest box. Push the cover down to close the centre console armrest box.

Loadspace Storage Box

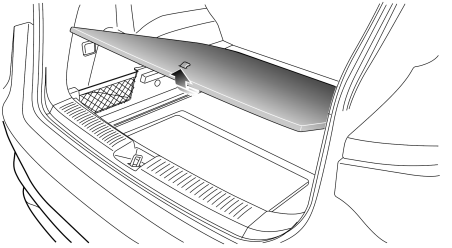

Lift the loadspace carpet pull strap to open the loadspace storage box, which can be used to store tools and other items.

Glasses case*

The glasses box should only be used when the vehicle is stationary.

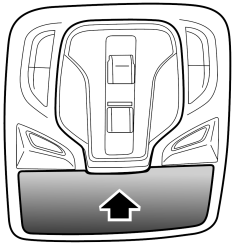

The glasses case is located near the front interior light. Press the panel(arrows) After opening the glasses case, place the glasses in the box. When the glasses case is not in use, please close the glasses case.

Note: Only the glasses with a standard glasses frame can be put into the glasses box.

Cup Holder

DO NOT place hot drinks in the cup holder whilst driving. Spillage may result in personal harm or damage.

Centre Console Cup Holder

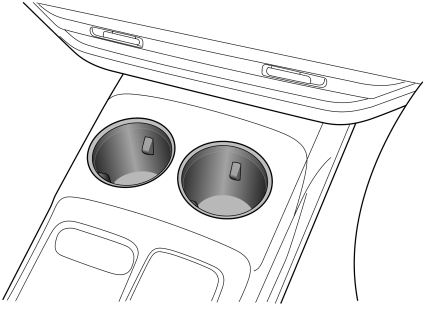

The centre console cup holder is located at the front end of the centre console armrest assembly and can hold cups or beverage bottles.

Rear Armrest and Rear Cup Holder*

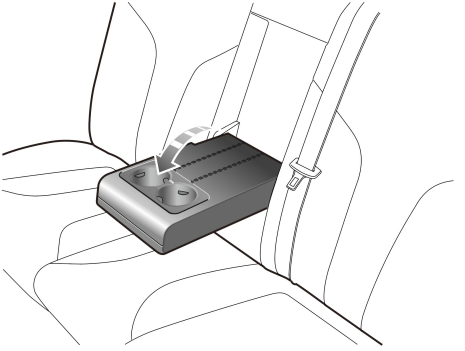

Fold forward to open the rear armrest. The front end of the rear armrest is equipped with a cup holder, which can hold beverage cups, etc.

IMPORTANT
Please place sealable cups or beverage bottles in the cup holder. Otherwise, the beverage may be spilled and cause damage to the equipment inside the car.

Preparations for Trip

Keys *100*

Anti-theft Systems *107*

Tailgate *112*

Load Carrying *119*

Towing *120*

Steering System Adjustment *122*

Alcolock *124*

Keys

Overview

Please keep the spare key in a safe place - not in the car!

It is recommended that spare keys are not kept on the same key ring, since this may cause interference and prevent correct key recognition and therefore prevent the correct operation of the vehicle power system.

The smart key contains delicate circuits and must be protected from impact, high temperature, humidity, direct sunlight and fluid corrosion.

WARNING

The keys of this vehicle contains coin / button batteries. The battery is HAZARDOUS and MUST be kept away from children (whether the battery is new or used).

WARNING

A lithium coin / button battery can cause SEVERE or FATAL injuries within 2 hours or less if it is swallowed or placed inside any part of the body.

WARNING

If you think batteries may have been swallowed or placed inside any part of the body, please seek medical advice immediately.

Your vehicle is supplied with two smart keys, Each smart key is equipped with a spare mechanical key. It can be used to mechanically unlock the door in an emergency, Mechanical keys cannot be used to start the vehicle.

The keys provided have been programmed for the security system on your vehicle. The vehicle cannot be started without a key programmed for your vehicle.

The smart key only works within a certain range. Please note that its operating range is sometimes affected by the battery level of the key and the influence of physical and geographical factors. For security reasons, After you lock the door, please check to see if the operation is successful.

key

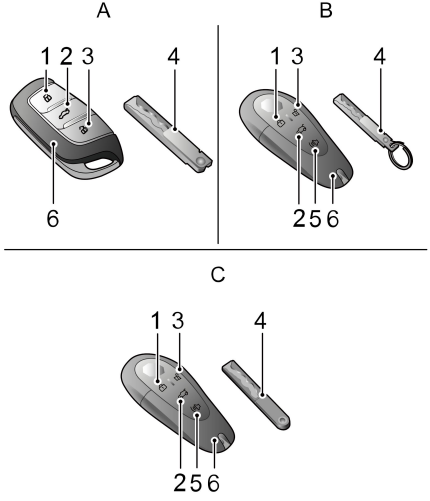

1 Locking button

2 Tailgate button

3 Unlocking button

4 Mechanical spare key

5 Find My Car button*

6 Smart keys

If you lose your keys, or they are stolen or damaged, it is recommended to an MG Authorised Repairer immediately for a replacement. The lost or stolen key will be deactivated from the starting power system. If the key is recovered, It can be reactivated by an MG Authorised Repairer.

Note: Any key made privately may not start the vehicle and may affect the safety of your car. To obtain a suitable key replacement, it is recommended that you consult an MG Authorised Repairer.

Note: The new key cannot be offered to you immediately because it requires programming to the vehicle by the MG Authorised Repairer.

Note: If your car is equipped with induction-type wireless charging function, always keep the key more than 20 cm away from the mobile phone which is being charged to prevent the key from the interference of wireless charging device.

Note: Avoid operating the smart key close to strong radio interference devices (such as notebook computers and other electronic products), the normal function of the key may be affected.

Replacing the Smart Key Battery

Please replace the smart key battery if you experience anyof the following conditions:

- The smart key operational range is significantly reduced ;
- The screen displays" If the key battery is low, please replace the battery"

Replacing the Smart Key Battery - Type A

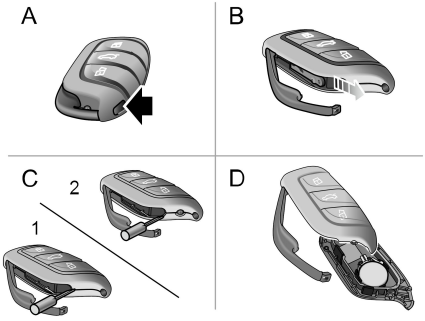

1 Press the button (A) on the smart key to eject thedecorative trim.

2 Remove the backup mechanical key (B) in the arrowed direction.

3 This step only for Australian vehicles only.Remove the screw by using a cross head screwdriver (if there is a screw on your key, as shown in C2) .

4 Using a suitable flat bladed tool, insert the tool into the side of the key (C1) , carefully prise off the battery cover and separate the upper and lower casings (D) .

Note: Make sure that the polarity of battery is correct (positive side downwards).

Note: It is recommended to use a CR2032 battery for the remote control.

5 Remove the used battery from the slot.

6 Put the new battery in the slot, and make sure it is in full contact with the slot.

7 Refit the cover and press tightly, ensure the gap around the cover is even.

8 This step is only for Australian vehicles. Use a cross head screwdriver to tighten the screw (if there is a screw on your key, as shown in C2) .

9 Refit the mechanical key, and close the decorative trim.

10 Start the power system to re-synchronise the key with the vehicle.

Replace the Smart Key Battery-Type B

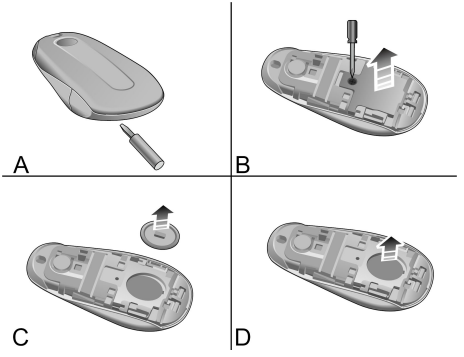

1 Using a suitable flat bladed tool, insert the tool into the end of the key and carefully prise off the key casing(A) .

2 Use a torx screwdriver with matching screws, Remove the battery cover after unscrewing the screws(Icon B) .

3 Remove the battery cover (C) .

4 Remove the old battery from the card slot(D) .

5 Place the new battery in the slot, Make sure the battery is correctly located.

Note: Make sure that the polarity of battery is correct (positive side downwards).

Note: It is recommended to use a CR2032 battery for the remote key.

6 Attach the battery waterproof pad.

7 Attach the battery cover, And tighten the screws.

8 Attach the back cover, Press firmly, And check whether the surrounding clearance is even.

9 Test the key for correct operation.

Replace the Smart Key Battery-Type C

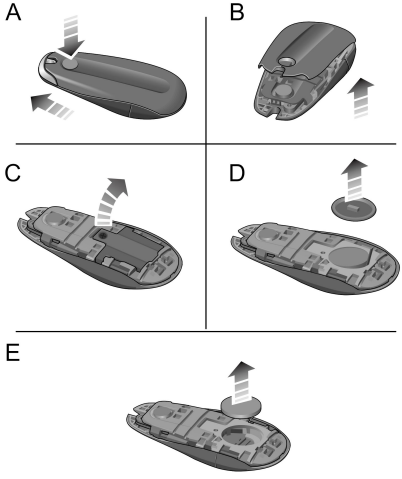

1 Press and hold the mechanical button (do not release) and simultaneously remove the key handle (A) .

2 Release and open the lower cover in an upwards direction (B) .

3 Using a suitable screwdriver, remove the screws and use a suitable flat bladed tool to pry open the battery cover (C) .

4 Remove the battery pad(D) .

5 Remove the old battery from the slot (E) .

6 Place the new battery in the slot, Make sure the battery is correctly located.

Note: Make sure that the polarity of battery is correct (positive side downwards).

Note: It is recommended to use a CR2032 battery for the remote key.

7 Attach the battery waterproof pad.

8 Attach the battery cover, And tighten the screws.

9 Install the lower cover, press the cover firmly to ensure correct location and press the key handle. Ensure the gap around the key is even.

10 Test the key for correct operation.

IMPORTANT
• Use of an incorrect or inappropriate battery may damage the smart key. The new battery's rated voltage, sizes and specifications must be the same as the old one. • Incorrect fitting of the battery may damage the key. • Disposal of the used battery must be strictly in accordance with relevant environmental protection acts.

Anti-theft Systems

Your vehicle is fitted with an immobiliser and a body anti-theft system. To ensure maximum safety and operation convenience, we strongly recommend you to read this section carefully to fully understand the activation and deactivation of anti-theft systems.

Immobiliser

The immobiliser is designed to safeguard the vehicle from theft. Only when the immobiliser is deactivated can the vehicle be placed into READY mode.

Once a valid key is detected inside the vehicle, the immobiliser will be deactivated automatically.

If the instrument pack displays "Smart Key Not Found" or "Please Put the Key in Standby Starting Position" or the immobiliser warning lamp illuminates, please put the smart key in the standby starting position (refer to "Standby Starting Procedure" under "Starting and Stopping the Power System" in "Drive the Vehicle" section), or try to use the spare key. If the car still can not be started, contact an MG Authorised Repairer.

Body Anti-theft System

Locking and Unlocking

When the vehicle is locked, the turn signal lamps illuminate three times; when it is unlocked, the turn signal lamps illuminate once.

Operation of Door Lock System (Key)

Key Locking

- Using the remote key to lock: press the lock button on the remote key to lock the vehicle after closing the doors, bonnet and tailgate.
- Using the mechanical key to lock: remove the driver side door lock trim cover, insert the key into the key slot and turn counterclockwise to lock the car.

Key Unlocking

- Using the remote key to unlock: press the unlock button on the remote key to unlock the vehicle.
- Using the mechanical key to unlock: remove the driver door lock trim cover, insert the key into the key slot and turn clockwise to unlock the car.

Note: If the vehicle power system has not been started and the remote key unlock has not been activated within more than a few seconds after the vehicle is unlocked with the mechanical key, the anti-theft alarm system will be triggered.

Find My Car

After the vehicle has been locked for several minutes, the Find My Car function is enabled which can provide an audible and visual warning by pressing and holding the lock button on the remote key. Pressing the lock button on the remote key again will suspend the Find My Car function. At this time, press the unlock button on the remote key to cancel the Find My Car function and unlock the vehicle. Find My Car can be set in the "Vehicle Settings" interface on the entertainment display.

Note: When the vehicle is locked, pressing the Unlock button on the remote key and performing no other operations within a period of time will trigger the auto re-lock function, meaning the vehicle will automatically lock.

Operation of Door Lock System (Keyless)

The keyless entry system can lock and unlock the doors or open the tailgate as long as you carry the smart key and approach to the car.

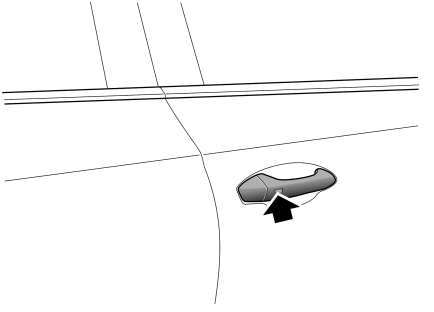

Note: Keep the distance between the smart key and the door handle within the 1.5 m range in order to lock and unlock the doors using the keyless function.

Keyless Locking

After the vehicle stops, when you have exited the vehicle and closed the door, only press the button on the front door handle once (no need to press the lock button on the remote key) to lock all doors, and the vehicle will enter the anti-theft alarm state.

Keyless Unlocking

Press the button on the front door handle once to unlock the vehicle, then pull the door handle to open the door.

Note: When the vehicle is locked, if you are within the smart key range and operate the door handle button but carry out no further action, the vehicle will then automatically lock itself to remain secure.

IMPORTANT
Once the door has been locked by the key, press the button on the door handle to unlock the vehicle. If the vehicle can not be unlocked or locked normally, please contact an MG Authorised Repairer.

Mislock

If the driver door is not fully closed, when conducting the locking operation on the vehicle, the door will not be locked, the horn will sound once to indicate mislock, and the body anti-theft system will be inoperative.

If a locking operation is performed when the driver's door is closed but the passenger's door, bonnet or tailgate is not fully closed, the vehicle horn will sound once, indicating a mislock. In this case, the 'partial arming' attributes of the body anti-theft system will be enabled (all fully closed doors, bonnet or tailgate apertures will be protected, but an open aperture will not!). Once the opened door, bonnet or tailgate is closed, the system automatically enters the complete anti-theft state. If the remote key is put back (or left behind) in the vehicle and the opened door is closed, the vehicle will be automatically unlocked.

Smart Key Locked in the Vehicle by Mistake

When a smart key is left in the vehicle and the other key is used to lock the vehicle, the function of the smart key locked in the vehicle to start the vehicle power system will be disabled, however the function to lock and unlock the

vehicle will be retained. In this case, the second smart key (outside the vehicle) must be used to unlock the vehicle, and the starting function of the key inside the vehicle will be automatically restored.

Anti-theft Alarm Sound

If the anti-theft alarm has been activated, before it is turned off, the car horn will sound continuously. Press the Unlock button on the remote key, the anti-theft alarm will be deactivated.

Interior Lock Switch

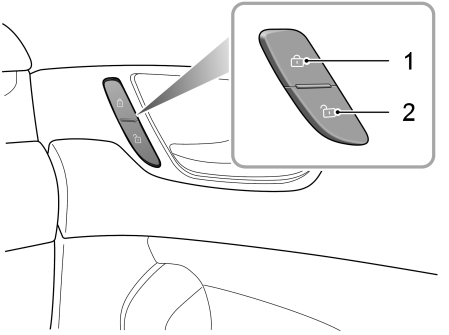

1 Lock Switch

2 Unlock Switch

When the body anti-theft system is not in operation, press the lock switch (1) of the interior lock after closing all doors to lock all doors; press the unlock switch (2) to unlock all doors.

Note: If the vehicle anti-theft system is set, pressing the lock/unlock switch of the interior locks will not lock/unlock doors but will trigger the alarm system.

If the doors, bonnet and tailgate are closed, when pressing the lock switch of the interior lock, the yellow indicator on the lock switch illuminates.

If the non-driver door, bonnet or tailgate is not fully closed, when pressing the lock switch of the interior lock, the yellow indicator on the lock switch flashes.

Inner Door Handle

Pull the inner door handle to unlock and open the door.

Note: When the anti-theft alarm system is activated by locking the vehicle with the remote key, the interior door handles will not be operational due to the anti-theft deadlocking of the doors. Please ensure people or animals do not remain in the vehicle when locking the vehicle with the remote key as they wil be unable to exit the vehicle and there is a risk of injury or death.

Auto Lock When Driving

All the doors will be locked automatically when the vehicle speed exceeds 10mph (15 km/h).

Tailgate

Manual Tailgate*

If the tailgate can not be closed due to the type of cargo loaded or if the weatherstrip seal is damaged, it is recommended you close all windows during driving, select the face distribution mode of the air conditioning and set the blower to maximum speed, so as to decrease any fumes entering the vehicle.

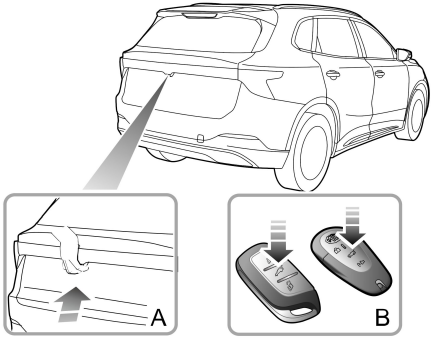

Manual tailgate can be opened by the following 2 ways:

1 Make sure that the driver's seat is not occupied before opening the tailgate with the button on the key. Long press the tailgate open button (B) on the key for more than 2 s to unlock the tailgate, then lift and open the tailgate;

2 When the vehicle is unlocked or the matched key appears within 1 m range around the tailgate, directly

press the open switch (A) on the tailgate to open the tailgate.

Electric Tailgate*

If the tailgate can not be closed due to the type of cargo loaded or if the weatherstrip seal is damaged, it is recommended you close all windows during driving, select the face distribution mode of the air conditioning and set the blower to maximum speed, so as to decrease any fumes entering the vehicle.

Prior to opening or closing the tailgate always ensure there are no people or objects that may obstruct operation. This may cause physical harm or damage.

The electric tailgate can only be operated when the vehicle is in P/N gear.

While opening/closing the tailgate, the system will provide users with reminders through buzzer alarms.

Electric Tailgate Open/Close Mode

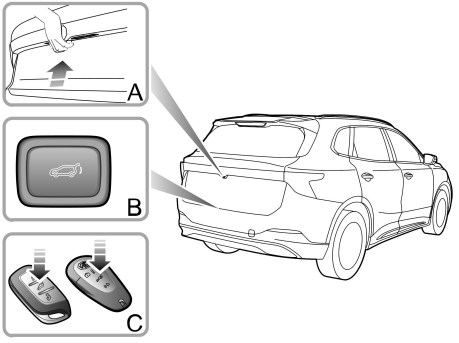

Electric Tailgate can be opened or closed by the following ways:

- ***Opening/Closing the tailgate from outside the vehicle:*** When the vehicle is unlocked or the matched key appears within 1 m range around the tailgate, press the button A , and the electric tailgate opens; press button B , and the electric tailgate closes.
- ***Opening/Closing the tailgate with the smart key:*** When the vehicle is powered off or the driver's seat is not occupied, long press the tailgate button (C) on the smart key, and the tailgate will open or close automatically.
- ***Opening/Closing the tailgate from inside the vehicle:*** Press the tailgate switch on the entertainment display to open or close the tailgate.

Note: In case of an extreme slope, the tailgate may not be electrically opened or fully closed due to the change of centre-of-gravity position.

If the tailgate fails to correctly open to the preset height or fully closed, manually close it once slowly and completely to recover the functions of electric tailgate system.

Note: During manual operation of electric tailgate, avoid violent or rapid operation, so that the electric tailgate system will not be damaged.

Foot Sensing Function*

When a valid smart key is within the effective range of the tailgate, the tailgate can be opened using the foot sensing function.

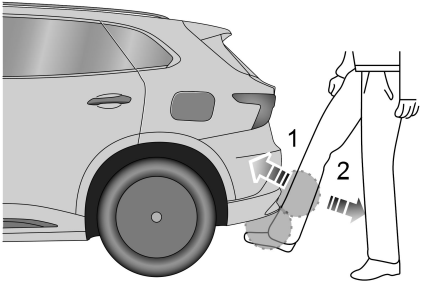

To open the tailgate using the foot sensing function, stand in the middle behind the vehicle as far as possible, move your foot and lower leg quickly to a position (1) as close to the rear bumper as possible, your lower leg must be in the upper sensor area and your foot must be in the lower sensor area, then move your foot and lower leg quickly away from the sensor area (2), and the tailgate will be opened automatically.

The foot sensing function can be set to on or off on the entertainment display as needed. When washing your car or performing maintenance and service work near the rear bumper, to prevent the tailgate from opening due to accidental triggering of the sensing function, please turn off the foot sensing function with the soft switch on the entertainment display.

In some cases, the tailgate opening by foot sensing will not be available or will be limited, so you can open the tailgate in other ways.

Anti-pinch Function

Function ON: In case any object that may interfere with the opening of the tailgate is detected, the tailgate will stop opening and close back to a certain angle to prevent contact with the obstacle.

Function OFF: In case any object that may interfere with the closing of the tailgate is detected, the tailgate will stop closing and open back to a certain angle to prevent contact with the obstacle.

Note: If the electric tailgate is operated several times in a short period of time and triggers the thermal protection, the system will suspend the electric opening and closing function for protective reasons. In this situation, manually close the tailgate completely once and wait for more than three minutes to resume the function of the electric tailgate system.

Note: If the electric tailgate anti-pinch function is activated for multiple times consecutively, the system will suspend the electric opening and closing function for protective reasons. In this situation, manually close the tailgate completely once to resume the function of the electric tailgate system.

Opening Height Setting of Electric Tailgate

Users can set the opening height of electric tailgate as needed by using the Close button on the tailgate or in the entertainment display. The electric tailgate controller will record the new opening height setting.

Setting method 1:

1. Open the tailgate to the desired setting height, and maintain it in position.
2. Press and hold the Close button at tailgate for more than 3 s, the buzzer makes a sound to indicate the successful setting.

Setting method 2:

1. Turn on the entertainment display, enter the tailgate height setting interface, and set it to the desired height position.

Note: If the power tailgate system failure occurs, a relevant warning message "Power Tailgate System Failure" will be displayed in the message centre of instrument pack, please contact an MG Authorised Repairer for service.

Tailgate Emergency Open

An emergency tailgate opening device is located inside the tailgate.

To gain access, lower the rear seat to allow access to the small emergency tailgate release access trim (A).

Remove the trim, locate the release lever (B) and use a suitable tool to rotate the lever in a counterclockwise direction.

Electric Tailgate*

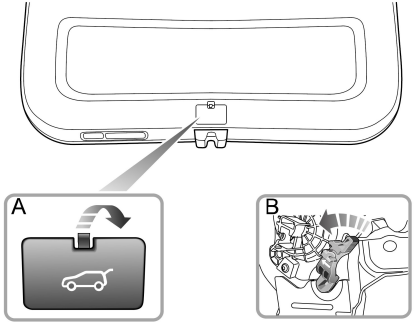

Manual Tailgate*

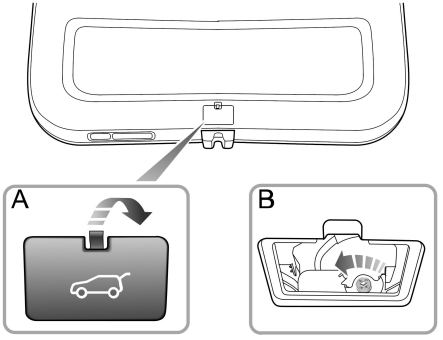

Load Carrying

DO NOT exceed the gross vehicle weight or the permitted front and rear axle loads. Failure may result in vehicle damage or serious injury!

Load Space

Ensure that the rear seat backrests are securely latched in the upright position when loads are carried in the load space behind the seats.

When luggage is carried in the load space, always ensure heavy items are placed as low and as far forward, as possible, so as to avoid the cargo shift in the event of an accident or sudden stop.

Drive carefully and avoid emergency braking or maneuvers acceleration when large or heavy items are carried.

IMPORTANT
Traffic regulations must be observed when loading cargo, if the cargo extrudes the loadspace appropriate warning measures must be taken to warn other road users.

Internal Loading

DO NOT carry unsecured equipment, tools or luggage that could move, causing personal injury in the event of an accident or emergency braking or hard acceleration.

DO NOT obstruct the driver's or passenger's vision with loads.

Folding the rear seats can increase luggage space, refer to "Seat Adjustment" described in the "Comfortable Experience" section.

Towing

Towing Function

Towing Device Safety Precautions

Exceeding any load limits advised by MG Motor is dangerous. Consult the recommended load limits and loading prior to any journey.

Excessive towing loads reduce front tyre traction and steering control, too little trailer nose load can make the trailer unstable and cause it to sway.

Please be sure to read the towing guidelines carefully, use approved equipment and comply with load limits, and always check load limits before towing.

Towing a load exceeding the maximum towing weight will severely affect the manoeuverability and performance of the vehicle, which may cause damage to the vehicle and driveline.

When fitting a towing device to your vehicle:

When towing: All lights at the rear of your vehicle must remain visible to road users behind your vehicle and must not be fully or partially blocked.

If the light sources are blocked when towing, auxiliary light sources such as light panels must be used.

When not towing: The fitted towing device must not block any light sources. If the towing device fully or partially blocks a light source (such as fog lamp), it must be removed or retracted when not towing.

Tow Bar

It is recommended to fit the original tow bar approved by MG and use the specified connection method to secure the traction frame. Please contact an MG Authorised Repairer for more details.

Safety Chain

A safety chain must be used to prevent the trailer from being accidentally decoupled. Ensure that the safety chain is securely attached to the trailer and your vehicle before starting off.

Gradient

When towing, you should plan your driving route to avoid steep slopes as much as possible. The maximum driving gradient should not be greater than 12% when towing. Try to select driving roads recommended by the Towing Association.

Run-in Period

It is recommended to avoid towing a trailer within the first 625 miles (1000 km) of your vehicle.

Trailer Mode

When towing is required, please turn on the trailer mode function of your vehicle, this can be turned on or off in the following ways:

1 Auto On/Off: The vehicle automatically enters or exits the trailer mode when the electrical connection between the trailer and your vehicle is connected or disconnected.

2 Manual On/Off: Turn the function on or off the entertainment display.

Note: When towing mode is engaged automatically, manual adjustment via the entertainment display is not possible.

In the trailer mode, some functions of the vehicle will be restricted or turned off (if any), such as:

- Automatic emergency braking;
- Adaptive cruise control system;
- Traffic jam assist system;
- Lane keeping assist system;
- Rearward driver assistance system;
- Parking assist system.

Steering System Adjustment

Steering Wheel Position Adjustment

DO NOT attempt to adjust the position of the steering wheel while the car is in motion. This is extremely dangerous.

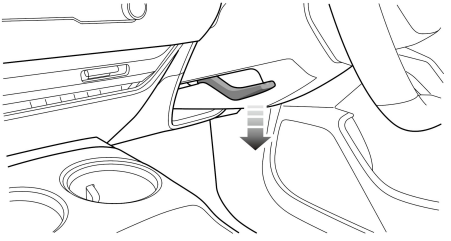

Adjust the position of the steering wheel to suit driving posture:

1 Fully release the locking lever (as arrowed).

2 Hold the steering wheel with both hands and tilt it up or down to adjust the steering wheel height; push and pull the steering wheel to adjust the distance between the steering wheel and the driver.

3 Once a comfortable driving position has been selected, pull the locking lever fully up to lock the steering wheel into its new position.

Electric Power Steering

If the electric power steering fails, the steering may appear very heavy, which will significantly affect driving safety.

The electric power steering system only works when the vehicle is in READY mode. The system works via a motor with assistance levels automatically adjusted based on vehicle speed, steering wheel torque and steering wheel angle.

IMPORTANT
Holding the steering wheel on full lock for long periods will result in a reduction in power assistance causing a heavier feel to the steering for a short period time.

Steering Feel Mode

The 'Steering Feel' can be adjusted via the intelligent display. The electric power steering system provides 3 steering feel modes:

1 Light: Provides a high level of steering assistance with an overall light feel.

2 Standard: Provides moderate level of steering assistance with a moderate feel.

3 Heavy: Provides a low level of steering assistance with a heavier feel.

Electric Power Assisted Steering (EPS) Warning Lamp

Refer to 'Warning Lamps and Indicators' chapter.

If the battery cable has been disconnected for any reason, upon reconnection the warning lamp will illuminate in yellow. Movement of the steering wheel from lock to lock will initialise the system and the lamp will extinguish.

Alcolock

The alcolock is only used as a detector to assist in restricting the driver from driving when the alcohol concentration exceeds the legal limit. However, remember that you are always the first person responsible for road traffic safety. For the safety of you and other traffic participants, drunk driving is illegal and strictly prohibited!

After fitting the alcolock, you should take the handheld device and exhale into the mouthpiece to detect the alcohol concentration in your breath before starting the vehicle. Should you be below the legal limit of alcohol concentration, the vehicle can then be started.

Note: The handheld device should be placed in a position that is easily accessible and does not affect driving. Please contact an MG Authorised Repairer to help you fit and set up the alcolock.

IMPORTANT
If you fail the alcohol test, do not attempt to start the vehicle forcibly for your safety. If you suspect that the alcolock fails, please contact a local Authorised Repairer

Drive the Vehicle

Starting and Stopping the Power System *126*
Economical and Environmental Driving *128*
Gear Shift *132*
Driving Mode *136*
Integrated Braking System (IBS) *137*
One Pedal Mode *138*
Energy Regeneration during Coasting *139*

Starting and Stopping the Power System

Starting the Power System

When the driver opens the driver's door with a valid key, and sits in the driver's seat, the instrument pack and intelligent display are powered on.

1 When pressing the brake pedal, the vehicle enters READY state.

2 Select 'D' (Drive) to begin your journey, or shift into 'R' to reverse.

Note: If the steering wheel cannot be turned after the vehicle has entered "READY MODE", please exit the vehicle ensuring the driver's door is fully closed. Once out of the vehicle, please sit back in the driver's seat and place the vehicle in "READY MODE" as described in the "Starting Procedure Section"

Standby Starting Procedure

When the vehicle is in a strong radio signals interference area, or the smart key battery has low power, please start the vehicle by using the standby starting procedure according to the following steps:

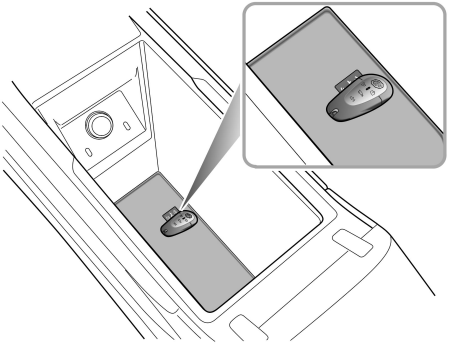

1 Place the smart key to the position as illustrated with the button upward.

2 Ensure you are sitting in the driver's seat and press the brake pedal and start the power system.

Once the smart key battery has been replaced or the car has left the area of interference and the passive start procedure continues not to function, seek an MG Authorised Repairer.

IMPORTANT
• If three consecutive attempts to start are unsuccessful, please seek assistance. Otherwise, multiple consecutive starts may cause damage to the power system and battery. • This car is equipped with an anti-theft system. Any privately prepared key cannot start the vehicle. • In environments with temperatures below -10 degrees Celsius, the time for the power system to start will increase. Therefore, when starting, turn off all unnecessary electrical equipments.

Stopping the Power System

Stop the vehicle power system as follows:

1 After bringing the car safely to a stop, and, whilst maintaining brake pedal application at all times.

2 Use the shift control to select 'P' (Park), this will automatically apply the parking brake - please check that the parking brake is applied.

3 After exiting the vehicle with the key, and ensuring all doors, bonnet and tailgate are closed, press the Lock Button of the smart key to power the vehicle down.

You are able to switch the vehicle off even whilst the driver's seat is occupied:

1 Bring the car safely to a stop in a suitable location.

2 Ensure P (Park) is selected and the parking brake applied. Select the following in the correct sequence: 'Vehicle Settings - Status - Power Off' in the intelligent display.

Note: If at any time the brake pedal is pressed whilst the driver seat is occupied, the car will re-enter READY mode.

Economical and Environmental Driving

Running-in

The brakes and tyres need time to 'bed-in' and adjust to the demands of everyday motoring. Therefore, in order to enhance the long-term operation performance, try to avoid rapid acceleration, rapid deceleration or emergency braking during the first 900 miles (1,500 km).

Environment Protection

Your car has been designed with the latest technology in order to minimize hazards to the environment.

Economic Driving

The way in which you drive your car has a significant bearing on the life span of the car, as well as affecting the energy consumption.

Drive Smoothly

Traveling at a suitable constant speed is more efficient than frequently braking and accelerating. Avoid making hard acceleration, sudden take-offs and harsh/emergency braking. Steady acceleration or deceleration uses considerably less energy than rapid acceleration or emergency braking, and minimizes the wear to mechanical components.

Avoid Driving at Maximum Speed

Both energy consumption and noise levels increase significantly at high speeds.

Driving Foreseeingly

Avoid roads with traffic congestion or traffic jams. Predict road congestion as early as possible and keep enough distance from the car in front when driving and slow

down in time. Avoid hard braking applications when not necessary, this will cause premature wear on braking components..

Managing Use of Auxiliary Electrical Equipment in Car

Although it is essential to remain comfortable when driving the vehicle, the use of interior auxiliary electrical equipment will increase the energy consumption.

Driving in Special Environments

Driving in Rain or Snow

Emergency braking, accelerating and steering on slippery roads will reduce the vehicle's handling performance and grip.

- If the window or windshield mists up, please use the air conditioning demist function; If there is water film on the rearview mirror or mist on the rear windscreen, please use the external rearview mirror and heated rear window function.
- If the road surface is frozen or covered with snow, the friction between the tyres and the road surface becomes very small, making it highly prone to accidents. Please avoid driving or install suitable snow chains before driving, refer to "Tyres" in the "Maintenance" section

Driving through Water

Do not venture into low-lying waterlogged roads or unknown water wading areas, as this may result in the failure of the power system, serious vehicle malfunctions (such as short circuits in electrical components), or damage to the power system due to water ingress! Any vehicle malfunction or damage resulting from this will no longer be covered by MG's warranty terms.

When driving a vehicle, try to avoid passing through waterlogged roads or areas with puddles as much as possible. If you need to drive through water, please follow the following suggestions:

- Before entering the flooded section, the depth of the water must be clear, and the height of the water should not exceed the lower edge of the vehicle body;
- If you must drive through water, you need to turn off the air conditioning before starting, lightly apply the accelerator pedal without releasing your foot, smoothly and slowly pass through the flooded road section, and control the speed to below 6 mph (10 km/h);
- Do not reverse into water or park the vehicle in stagnant water. If driving through water causes the vehicle to stall, please do not attempt to start the vehicle again. Please contact a MG Authorised Repairer or breakdown service for inspection;
- After passing through water, lightly apply the brake pedal continuously to confirm that the braking performance is normal and avoid emergency braking;
- After passing through water, please check that the lighting and horn functions are normal;
- After wading through water, it may affect the functionality and performance of the vehicle. It is recommended to contact a MG Authorised Repairer for inspection as soon as possible.

IMPORTANT

- When there is water or mud on the surface of the brake discs, it may cause a decrease in braking performance and thus prolong the braking distance. Please drive carefully to prevent accidents.
- Wet brake pads may not function properly. If only one brake can operate properly, it can affect steering control and cause accidents.
- After water enters the interior of high-voltage components, it has a significant impact on their insulation properties. Water contains a lot of conductive substances, which may cause internal short circuits in high-voltage components, seriously affecting vehicle safety and driving performance.

Check and Service

Check Tyre Pressures Regularly

Over or under-inflated tyres wear out more rapidly and also have a detrimental effect on the car's handling characteristics. Under-inflated tyres increase the rolling resistance of the car which, in turn, increases energy consumption.

Do not Carry Unnecessary Loads

The additional weight of unnecessary loads can affect power consumption, especially in stop/start conditions where the car is frequently required to set off from stationary. Where possible, remove any dried mud/dirt from the vehicle and chassis, this will not only reduce body weight, but also can prevent body corrosion.

Maintain Correct Four-Wheel Alignment

Maintain the correct wheel alignment. Avoid collisions with the kerb and reduce speed on uneven road surfaces. Out of specification wheel alignment will not only lead to excessive tyre wear, but also increases the load and power consumption.

Gear Shift

Shift Operation

When the vehicle is in motion, it is prohibited to switch from D gear to R or P gear, this may cause serious damage to the electric drive transmission or cause accidents.

It is prohibited to coast in neutral while the vehicle is in motion, this may cause an accidents.

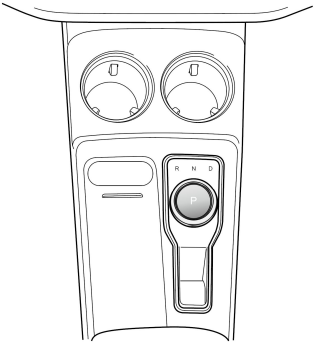

The shift knob is in a middle steady-state position and has two non-steady state positions respectively if turned anti-clockwise or clockwise, this means that the shift knob will return to the middle steady-state position as soon as it is released.

P : Park

In this position, the vehicle will be locked. Please select this gear when the vehicle is stationary.

Press the P button in the centre of the shift knob, the vehicle will shift into Park gear.

The vehicle will automatically shift into P gear in following situations:

- Power off the vehicle.
- The brake pedal is not pressed, the driver's seat belt is released and the driver's door is opened.

R : Reverse

Select this gear only when the vehicle is stationary and you wish to drive backwards.

Apply the brake pedal, turn the shift control knob counterclockwise to the end and release. The spring loaded shift control knob will return to a central position and the vehicle will enter Reverse.

N : Neutral

Select this gear when the vehicle is stationary (for example, waiting at traffic lights).

With the vehicle is in P gear, depress the brake pedal, turn the shift knob to the first non-steady state position clockwise or anti-clockwise, the vehicle will shift into Neutral gear.

With the vehicle in D gear, turn the shift knob to the first non-steady state position anti-clockwise, the vehicle will shift into Neutral gear.

Note: When the vehicle speed exceeds a certain value, when shifting from D gear to N gear, it is necessary to maintain the N gear selection position for 1 second before entering N gear.

With the vehicle in R gear, turn the shift knob to the first non-steady state position clockwise, the vehicle will shift into the Neutral gear position.

D : Drive

This is used for normal driving.

Whilst in Park, Neutral or Reverse apply the brake pedal, turn the shift control knob clockwise to the end and release. The spring loaded shift control knob will return to a central position and the vehicle will enter Drive. For safety reasons ALWAYS apply the brake pedal when shifting between R , N and D positions.

Protection Mode

When parking the vehicle, please ensure the vehicle is parked safely and that all traffic by-laws are observed.

Gear Shift System Failure

When some serious functional failures occur in the gear shift system, the instrument pack interface will display " EP ". At this time, for safe driving, if the vehicle speed is lower than a certain value, the power system will forcibly cut off the power transmission, and the vehicle will not be able to drive! In this case, please contact an MG Authorised Repairer for service as soon as possible.

Electric Drive Unit Motor Failure

When the system detects a general failure with the electric drive unit motor or controller, the warning indicator on the instrument interface will illuminate in yellow. In this case, please drive carefully. For severe functional malfunction, the warning indicator will illuminate in red. In this case, please stop the vehicle in a safe manner and contact an MG Authorised Repairer for service as soon as possible.

Electric Drive Unit Power Limit

The electric drive unit may become very hot in a high-temperature environment with frequent starting, frequent rapid acceleration and deceleration, long-term continuous steep climbing, and overload of the electric drive unit, etc.

In some cases, the system will limit the power to avoid damage to the motor. The warning indicator on the instrument interface will illuminate.

In this case, park your car in a safe place or keep a low load and continue to drive your car at a constant speed to cool the motor. Only when the motor temperature is reduced and the warning indicator extinguishes can the vehicle be driven normally.

If the warning indicator does not go out after the electric drive unit has cooled down for a long time (about 20 minutes), please stop the vehicle in a safe place and contact an MG Authorised Repairer for service as soon as possible, otherwise it may seriously damage the electric drive unit.

Power System Failure

When some general failures occur in the power system, the warning indicator on the instrument interface will illuminate in yellow. In this case, please contact an MG Authorised Repairer as soon as possible. In case of a severe functional malfunction, the warning indicator will illuminate in red. In this case, please drive carefully or stop the vehicle in a safe manner and contact an MG Authorised Repairer for assitance as soon as possible.

For some failures, the power system will forcibly cut off the power transmission, and the vehicle cannot be driven! In this case, please contact an MG Authorised Repairer for service as soon as possible.

Driving Mode

Please avoid switching between DrivingModes while driving. This may divert thedriver's attention away from road conditionsand cause an accident.

The driving mode enables different tuning modes for power response, steering feel, etc.

The following driving modes can be selected using the velicle settings interface of the intelligent display:

1 **Normal Mode**

The vehicle is in a balanced driving state for daily driving.

2 **Comfort Mode**

Effectively improves the riding experience for passengers inside, it reduces motion sickness and discomfort.

3 **Sport Mode**

Provides the driver with a more dynamic driving experience, suitable for sporty driving style.

4 **Snow Mode**

It is used when driving on the snowy and icy roads in winter.

5 **Custom Mode**

After selecting the Custom Mode, the driver can personalize the power and steering feel settings individually.

Integrated Braking System (IBS)

IBS System

The integrated braking system (IBS) on this model series features a high degree of integration with other systems,a faster braking response and higher stability due to the fact it does not rely on vacuum for operation. Pay attention to the followings during use of the IBS :

- The IBS only functions with the power system in READY mode. NEVER allow the vehicle to freewheel with the power system turned off.
- If the power system is turned off while driving, you should firmly press the brake pedal, and stop the vehicle as quickly as traffic safely permits.
- If the IBS performance degrades due to low battery or other reasons, you need to apply more force than usual to the brake pedal to brake effectively.
- When driving through puddles or heavy rain, a water film may form on the surface of the brake discs, which can reduce the braking efficiency and extends braking distance. In this case, keep a safe distance from other vehicles and intermittently apply the brake pedal to keep the brake disc surface dry.
- If the braking efficiency decreases due to vehicle failure, please contact an MG Authorised Repairer for service as soon as possible.

IBS will conduct a system self-check after the vehicle is normally powered off. During this time, the brake pedal may appear to be too hard or unable to be depressed for a short period of time, which is normal.

One Pedal Mode

DO NOT compromise the prediction of road conditions due to the convenient operation of the one pedal driving function. You still need to brake through the brake pedal in an emergency. Please always be ready for braking to ensure driving safety.

DO NOT use the one pedal driving function when the vehicle has a tendency of slipping.

When the one pedal driving function is enabled, the driver can control the vehicle speed just through the accelerator pedal; depress the accelerator pedal to accelerate; release the accelerator pedal to decelerate, then the vehicle can slow down until it stops.

Note: Even if the one pedal function can achieve the braking effect, there will still be the risk of slipping in the cases of large slopes. DO NOT drive relying solely on the convenience of the One-Pedal function. Please always ensure effective braking and parking.

When the driving mode is set to stepless driving mode, the driver can switch the one pedal driving mode ON or OFF through the entertainment display.

When the vehicle is in one pedal mode and the vehicle speed is low, release the accelerator pedal and turn one pedal driving mode off through the entertainment display, for safety reasons, the system may cause the vehicle to maintain the current deceleration trend until it stops.

In some cases, the one pedal driving function will be limited or exited, such as:

- Seat belt unfastened or door opened;
- Brake system failure;
- Power system failure;
- Snow mode ON;
- Super energy-saving mode ON;
- When the intelligent driving function is activated, the One-Pedal function is limited;
- The charging power is too low, such as in scenarios where the battery level is too high or the ambient temperature is too low.

Energy Regeneration during Coasting

The reduction in vehicle speed caused by energy regeneration cannot replace the braking required for safety. PLEASE ALWAYS be prepared for braking to ensure driving safety.

When the vehicle in motion is in a braking or coasting state, the energy recovery function will be activated, and the motor will convert part of the kinetic energy of the vehicle into electric energy, which is then stored in the high voltage battery.

Energy cannot be regenerated or is limited under some conditions, such as:

- N gear is selected;
- During torque intervention (gear shifting, SCS or traction control operation);
- High-voltage battery is fully charged;
- High-voltage battery temperature is too high or too low.

The energy recovery settings have the following several modes:

"Low" Mode

In "Low" mode: there is less energy recovered, meaning a longer coasting distance and no significant vehicle drag sensation. The energy recovery rating is shown as 1 on the instrument.

"Moderate" Mode

In "Moderate" mode: there is moderate energy recovered. The energy recovery rating is shown as 2 on the instrument.

"High" Mode

In "High" mode: maximum energy is recovered, meaning a shorter coasting distance and strong vehicle drag sensation. The energy recovery rating is shown as 3 on the instrument.

"Adaptive" Mode

In "Adaptive" mode, the vehicle will automatically adjust the energy recovery intensity according to the road conditions and the distance from the vehicle ahead. The energy recovery rating is shown as A on the instrument.

Leave Home Safe

Seat Belt 142

Airbags 155

Child Restraint - For Australia 167

Child Restraints - For UK and Others 176

Child Proof Locks 187

Body Stability Control System 188

Antilock Brake System (ABS) 189

Electronic Parking Brake (EPB) 190

Auxiliary Braking System 193

Auto Hold 194

Hill Hold Control (HHC) 196

Hill Descent Control (HDC) 197

Active Rollover Protection (ARP) 199

Emergency Braking Hazard Warning Strobe (HAZ) 200

Multi-Collision Brake System (MCB) 201

Pedestrian Alert Control System 202

Tyre Pressure Monitoring System (TPMS) 203

Seat Belt

It is important that all seat belts are worn correctly. Always check that all passengers are wearing seat belts. DO NOT carry passengers that are unable to wear correctly positioned seat belts. Wearing seat belts incorrectly may cause serious injury or even death in the event of a collision.

Airbags can not replace seat belts. Airbags can only provide extra support when triggered, and not all traffic accidents will trigger airbags. Whether airbags are triggered or not, seat belts can reduce the risks of serious injury or death in accidents. Therefore, seat belts must be worn properly.

NEVER unfasten a seat belt whilst driving, serious injury or death may occur in the event of an accident or emergency braking.

Never fasten the driver seat belt or use a buckle replacement when the driver seat is vacant or when exiting the vehicle.

This vehicle is equipped with seat belt warning lamp to remind you to fasten your seat belt. Please refer to 'Warning Lamps and Indicators' in the 'Brief Introduction to Vehicle Functions' section for more information. When the vehicle is in motion, seat belts must be fastened for all occupants. This is because:

- You can never predict if you will be involved in a collision accident and how serious it may be.
- In the event of a collision or emergency braking, the seat belts will automatically lock. When the seat belt is worn correctly, the strongest bones in your body will bear the impact force to reduce your speed together with the vehicle, so as to prevent the out-of-control movement which may cause serious injury to driver and passengers.
- The force generated by a low-speed collision cannot be supported by arms and hands even in a minor traffic accident.

- Experience has clearly demonstrated that correct wearing of seat belts is closely related to the effective protection of occupants in most collision accidents!

Therefore, all passengers must wear seat belts correctly, even during short-distance journeys.

Protection Provided by Seat Belts

It is of equal importance for passengers in the rear seat to fasten their seat belts correctly. Otherwise, passengers with seat belts not correctly fastened will be thrown forward in accidents, and will endanger themselves as well as the driver and other passengers.

When the vehicle is in motion, the travelling speed of the occupants is identical to that of the vehicle. In the event of a 'head on collision' or emergency braking, the vehicle may stop, but the occupants will carry on travelling until they come into contact with a stationary object. This object may be the steering wheel, dashboard, windscreen and others. A correctly fastened seat belt will eliminate this risk of injury.

When the seat belt is worn correctly, it will lock automatically in collision accidents or emergency braking to reduce your speed together with the vehicle, so as to prevent the out-of-control movement which may cause serious injury to driver and passengers. Under the protection of a seat belt, you will have a longer distance and more time to stop moving, and the strongest bones in your body will bear the impact force. That is why it is important to fasten the seat belt correctly.

When a minor traffic accident occurs, trying to shore up your body with arms is very dangerous. Even a low-speed collision will generate force that arms and hands can not support, therefore, seat belts must be worn correctly during driving

Correctly Wearing Seat Belts

Incorrectly worn seat belts could cause injury or death in the event of an accident. Seat belts are designed for one person, DO NOT share seat belts.

DO NOT wrap a seat belt around when holding a baby or child in your arms.

Remove any heavy coats or clothing when wearing a seat belt, failure to do so can affect protection provided by the seat belt.

Seat belts should not be wrapped around hard or sharp objects such as pens, spectacles or keys.

Seat belts can not function correctly when the seats are reclined excessively. DO NOT drive when the seats are excessively reclined.

The seat belts fitted to your vehicle are designed for use by normal sized adults. This part of the literature refers to

adult use. For advice on seat belt use with children, please see 'Children and Seat Belts'.

In order to maintain effective protection, the passengers must sit in the correct orientation, placing feet on the floor in front of them, with an upright body (no excessive recline) and the seat belt correctly fastened.

Lap-shoulder Belts

All seat belts fitted on this vehicle are lap-shoulder belts, which should be used correctly as described below:

1 Hold the metal tab, pull the seat belt out steadily over the shoulder and across your chest. Ensure there is no twist on the belt.

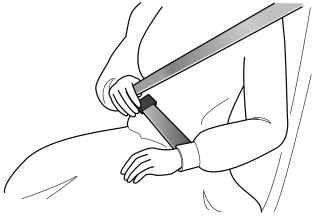

2 Insert the metal tab into the buckle until you hear a 'click', this indicates the seat belt is securely locked.

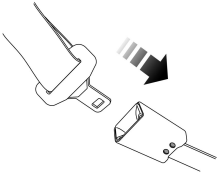

3 Pull the shoulder belt upward and tighten up the lap belt.

4 To release the seat belt, press the red button on the buckle, and the metal tab of the seat belt will automatically pop out. When the seat belt is unfastened, the metal tab will retract automatically to its original position.

IMPORTANT

- Always ensure the seat belt will not become trapped in the door aperture when closing the door. Otherwise the seat belt or vehicle may be damaged.
- Pulling the seat belt out too quickly may cause it to 'lock'. In this case, allow the seat belt to retract slightly and then pull it across your body slowly.
- If it is difficult to pull the seat belt out, it may be due to twisted webbing. If this is the case, fully extract the seat belt, remove the twist, and allow the seat belt to retract slowly.
- When using the rear seat belts please ensure they are fully retracted into the correct position to avoid jamming in the rear seat catches. Even if the seat belt is not completely untwisted, it is still required to be worn during driving, but the twisted part of the seat belt should not contact the passenger. If this happens, please consult an authorised repairer for repair.

Correct Routing of the Seat Belts

Ensure the seat belt is correctly positioned on the body, NEVER cross the neck or abdomen, NEVER pass the seat belt behind the back or under the arms.

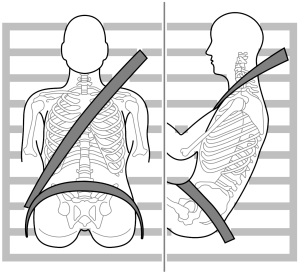

When wearing seat belts, the lap belt section should be positioned as low as possible across your hips (Never cross the abdomen), so that in a collision accident, the lap belt can apply force to the firm hips, reduce the possibility of body moving under the lap belt, and maximize the protection for passengers against injury.

This is because if the accident occurs, the body moves under the lap belt, causing the lap belt to apply force on abdomen, which may cause serious or fatal injuries. The diagonal section of the belt should cross the middle of the shoulder and the chest.

Never cross your neck, arms, or cross under your arms or behind your back. In the event of emergency braking or collision, the diagonal section of the belt will be locked.

To ensure that the seat belts always provide maximum protection, ensure the belt is flat, not loose and contacts the body. Adjust seat belt to ensure it is not loose.

Seat Belt Use during Pregnancy

During the whole pregnancy, the pregnant women must wear the lap - shoulder seat belt correctly. The diagonal section of the seat belt should pass across the chest as normal. The lap section of the belt should pass below the belly, low and snug on the hip bones. NEVER position the belt on or above the belly. Wearing correctly positioned seat belts will provide protection for both mother and unborn child in the event of a collision or emergency braking.

Please consult your physician for further details.

Seat Belt Use and Disabilities

It is a legal requirement that all occupants wear seat belts, this include people with disabilities.

Please consult your physician for further details.

Children and Seat Belts

Proper protection measures must be taken for children during driving.

For safety reasons, children must ride in a child restraint fixed to the rear seat.

Infants

Only recommended child restraints suitable for the age, height and weight of the child should be used.

NEVER carry a child or infant with your arms during driving. When collision accidents occur, the weight of the child will produce so great of a force that you will not be able to hold on to the child. The child will be thrown forward and suffer serious injury oreven death.

The seat belts fitted to your vehicle are designed for adults. They are not suitable for children. In the event of an accident or collision, the children are not secure. It could cause death or serious injury.

Infants MUST use a suitable child restraint device. Please consult the child seat manufacturer's guidelines when selecting the correct seat. Follow the manufacturer's instructions on installation. Please refer to 'Child Restraints' in this chapter for more details.

Older Children

NEVER share a seat belt amongst children. In the event of an accident or collision, the children are not secure. It could cause death or serious injury.

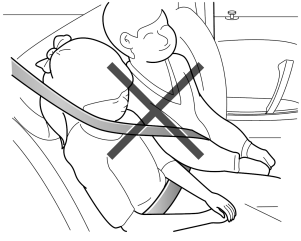

As children grow and become older/larger it will get to the stage when they no longer require child seat restraints. At this point they will require use of the vehicle standard seat belt. Please ensure the seat belt is correctly positioned on the body of the child.

When fastening a seat belt for a child always check it for correct positioning. Adjust the height of the seat belt to

ensure the shoulder belt is kept away from the child's face and neck. Position the lap belt across the hips as low as possible, and tighten adequately. Correct positioning means that the seat belts can pass the applied force to the strongest part of the child's body in accidents.

If the shoulder belt is too close to the child's face or neck, it may be necessary to use a child booster cushion (always ensure that it meets any relevant laws or standards).

Seat Belt Pre-tensioners

The seat belt pre-tensioners will only be activated once and then MUST BE REPLACED. Failure to replace the pre-tensioners will reduce the efficiency of the vehicle's restraint system.

If the pre-tensioners have been activated, the seat belts will still function as restraints, and must be worn in the event that the vehicle remains in a drivable condition. The seat belt pre-tensioners should be replaced at the earliest opportunity by an Authorised Repairer.

The vehicle is fitted with seat belt pre-tensioners. These are designed to retract the seat belts and work in conjunction with the airbags in the event of a severe collision. When medium or severe frontal collision occurs and meets the condition to activate the pre-tensioner, it will help to secure the seat belt to reduce passengers moving forward.

The airbag warning lamp on the instrument pack will alert the driver to any malfunction of the seat belt pre-tensioners (see 'Warning Lamps and Indicators' in the 'Brief Introduction to Vehicle Functions' chapter).

The seat belt pre-tensioners can only be activated once. After activation in a collision, they must be replaced. This may also involve replacement of other SRS components. Please refer to 'Replacement of SRS Components' in 'Airbags' of this section.

IMPORTANT
• Seat belt pre-tensioners will not be activated by minor impacts. • The removal or replacement of a pre-tensioner must be carried out by the manufacturer trained dealer technicians. For better guarantee of your safety, we recommend you to consult an Authorised Repairer. • After 10 years from the use of vehicle (or replacement of seat belt pre-tensioner), it is recommended to replace related components to guarantee your safety. If you have any doubt about the device within this period, we recommend you consult an Authorised Repairer

Seat Belt Check, Maintenance and Replacement

Seat Belt Checks

Split, worn or frayed seat belts may not function correctly in the event of a collision, if there are any signs of damage, replace the belt immediately.

Always ensure the red release button on the seat belt buckle is pointing upwards ensure easy release in the event of an emergency.

Please follow the instructions below to check the seat belt warning lamp, seat belt, metal tab, buckle, retractor and fixing device regularly:

- Insert the seat belt metal tab into the corresponding buckle and pull seat belt webbing close to the buckle quickly to check that the belt clasp locks.
- Hold the metal tab and pull the seat belt forward quickly to check that the seat belt reel locks automatically, preventing the webbing from extending.
- Fully extract the seat belt and visibly examine for twists, fraying, splits or worn areas.
- Retract the seat belt and allow to return slowly to ensure continual and complete smooth operation.
- Visibly examine the seat belt for missing or broken components or components that may affect the normal operation.
- Ensure the seat belt warning system is fully functional.

If the seat belt fails to pass any one of above checks, please contact an Authorised Repairer for repair.

Seat Belt Maintenance

Seat belt repairs and removal should only be carried out by an Authorised Repairer. The repair of a seat belt component must be carried out by the manufacturer trained, dealer technicians. In the event of accidents, improper maintenance may cause seat belt pre-tensioners not to be activated normally to increase accident injury risk. For a better guarantee of your safety, we recommend you to consult an Authorised Repairer.

Ensure no foreign or sharp objects become lodged in the seat belt mechanisms. DO NOT allow liquids to contaminate the seat belt buckle, this could affect the buckle engagement.

Seat belts should only be cleaned with warm soapy water. Do not use any solvent to clean the seat belt. Do not attempt to bleach or dye the seat belt, otherwise the strength of the seat belt will be severely weakened. After cleaning, wipe with a cloth and allow to dry.

Do not allow the seat belt to fully retract before it is completely dry. Keep seat belts clean and dry.

If there are contaminants accumulated in the retractor, the retraction of seat belt will be slow. Please use a clean and dry cloth to remove any contaminants.

Seat Belt Replacement

Collision accidents may damage the seat belt system. The seat belt system may not be able to protect users after damage, which may result in serious injury or even death. After an accident, seat belts should be checked and replaced as needed immediately.

Seat belts may not require change after minor collisions. However, some other parts of the seat belt system, like metal tab, buckle, retractor, etc, may be deformed or damaged in the collision. Please go to an Authorised Repairer for repair or replacement of seat belt assembly.

Airbags

Overview

The airbag SRS provides ADDITIONAL protection in a severe frontal impact only. It does not replace the need or requirement to wear a seat belt.

The airbags together with the seat belts provide optimum protection for adults, but it is not the case for infants. The seat belt and airbag systems in the vehicle are not designed for protecting infants. The protection required by infants should be provided by child restraints.

In the corresponding position where airbags are fitted there is a warning sign stating 'AIRBAG'. Generally, SRS contains the following components (the components are not completely the same according to different models and configuration:

- Front airbags (fitted in the center of the steering wheel and the instrument panel above the glove box)
- Side airbags (fitted in the outer seatback cushion of the two front seats)
- Side curtain airbags (fitted in the roof interior trim)
- Centre airbag (fitted in the inner seatback cushion of the driver seat)*

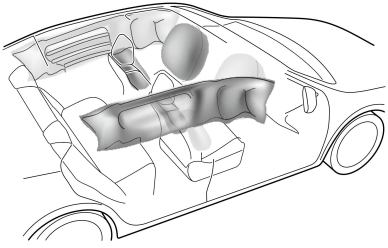

Airbag Warning Lamp

This vehicle is equipped with an airbag warning lamp to remind you of the state of the SRS system. Refer

to 'Warning Lamps and Indicators' in 'Brief Introduction to Vehicle Functions' chapter for details.

Airbag Deployment

Front seat passengers should not place feet, knees or any other part of the body in contact with or in close proximity to a front airbag.

To minimise the risk of accidental injury from inflating airbags, seat belts should be worn correctly at all times. In addition, both driver and front passenger should adjust their seat to provide sufficient distance from the frontal airbags, so as to avoid severe or even fatal injury when the airbag is deployed. If side airbags and side head impact protection airbags are fitted, both driver and front seat passenger should be seated to maintain sufficient distance from the upper part of the body to the sides of the vehicle, this will ensure maximum protection when the side airbags/side head impact protection airbags are deployed.

An inflating airbag can cause facial abrasions and other injuries if the occupant is too close to the airbag at the time of its deployment.

When airbags are deployed, children without proper protection may suffer from serious injury or even death. DO NOT carry children in the arms or on the knees during traveling. Children should wear seat belts suitable to age. DO NOT lean out of windows.

After deployment, the relative airbag components will become very hot, such as the steering wheel, instrument panel and both sides of the roof rails . DO NOT touch any airbag related components after airbag deployment, it may cause burns or serious injury.

DO NOT knock or strike the position where any airbag related parts are located, so as to avoid accidental airbag deployment which may cause serious injury or even death.

DO NOT affix or place any objects on or adjacent to the airbags. This may affect the airbag passage or create projectiles that may cause injury or serious harm in the event of airbag deployment

In the event of a collision, the airbag control unit monitors the rate of deceleration or acceleration induced by the collision, to determine whether the airbags should be deployed. Airbag deployment is virtually instantaneous and occurs with considerable force, accompanied by a loud noise.

In the event of a severe frontal collision, a completely deployed airbag, along with a correctly worn seat belt, can limit the movement of the driver and front passenger, reducing the risk of head and chest injuries. For vehicles fitted with side airbags and side curtain airbags, when the vehicle encounters serious side collision, the completely

deployed airbag will form a cushion of air between the occupant and the vehicle side to reduce the risk of body side injuries.

When you sit upright in the seat and against the backrest, seat belts and airbags can provide the most effective protection. When encountering serious collision, airbags will deploy drastically. At this moment, if you or other passengers do not use seat belts properly, and lean forward, recline or sit in other incorrect postures, you or other passengers are likely to suffer from serious injury or fatal injury.

IMPORTANT

- Airbags cannot protect lower body parts of passengers.
- Airbags are not designed for rear collision, minor frontal collision or if the vehicle rolls over, nor will it operate as a result of heavy braking.
- Deployment and deflation of the airbags takes place very quickly and will not protect against the effects of a secondary impact if it occurs.
- When an airbag inflates, a fine powder is released. This is not an indication of a malfunction. However, the powder may cause irritation to the skin and should be thoroughly flushed from the eyes and any cuts or abrasions of the skin. If your skin, eyes, nose or throat etc feels uncomfortable, please consult a doctor.
- After inflation, front and side airbags deflate immediately. This provides a gradual cushioning effect for the occupant and also ensures that the driver's forward vision is not obscured.

Front Airbags

NEVER use a rearward facing child restraint on a seat protected by an ACTIVE AIRBAG in front of it, DEATH or SERIOUS INJURY to the CHILD can occur. Refer to 'Disabling the Passenger Airbag'.

Front seat passengers should not place feet, knees or any other part of the body in contact with or in close proximity to a front airbag.

In extreme cases driving on very uneven surfaces may cause airbag deployment. Please take extra care when driving on uneven roads.

Airbags are designed to deploy during serious impacts, the following conditions may cause airbag deployment.

- A frontal collision with unmovable or non deformable solid objects at a high speed.

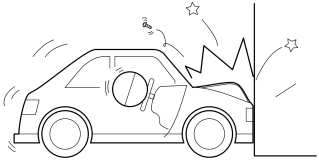

- Conditions that can cause serious chassis damage, such as a collision with kerbstones, road edges, deep ravinesor holes.

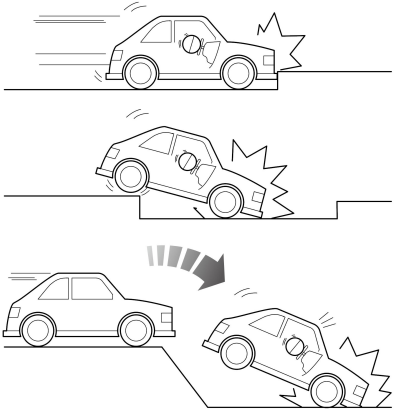

Side Airbags, Centre Airbag* and Side Curtain Airbags

The structure and material of the seat is critical to the correct operation of side airbags. Therefore, please DO NOT fit seat covers which may affect side airbag deployment.

In the event of a serious side impact, the relevant side airbag will deploy from the seat cover and the side curtain airbags will deploy from the roof interior trim (only the affected side). The other side will not deploy. The conditions described below (or similar) may cause side airbag and side curtain airbag deployment.

- One side of the vehicle collides with high-speed ordinary passenger car.

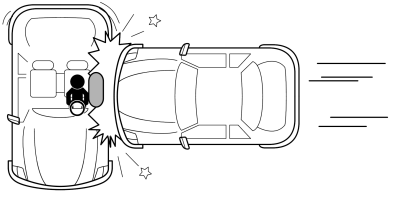

Conditions in Which Airbags Will Not Deploy

The deployment of airbags does not depend on the vehicle speed, but on the object that the vehicle hits, angle of impact and the rate at which the car changes speed as a result of a collision. When the impact force of collision is absorbed or dispersed to the vehicle body, airbags may not deploy; however, airbags may sometimes deploy according to impact condition. Therefore, the deployment of airbags shall not be judged based on the severity of vehicle damage.

Front Airbags

Under certain conditions the front airbags may not bedeployed. Some examples are listed below:

- The impact point is not central to the front of the vehicle.
- The impact is not of sufficient force (the impact is with an object that is not solid, such as a lamp post or traffic sign post).

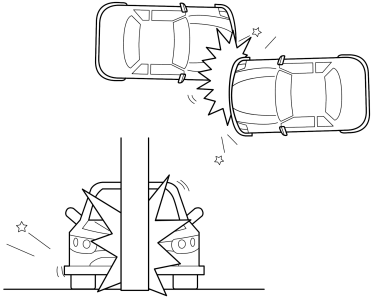

- Collision with the bottom part of the truck's tail; cut-in collision with trucks or vehicles with a higher chassis.
- Frontal collision at an angle with guard bars.

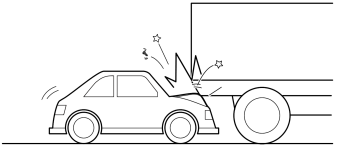

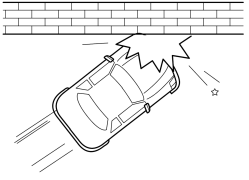

- Impacts to the rear or side of the vehicle.
- The vehicle rolling over.

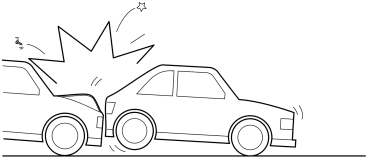

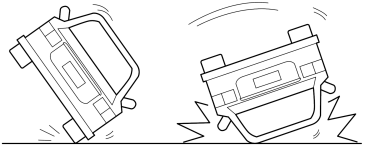

Side Airbags, Centre Airbag* and Side Curtain Airbags

Under certain conditions the seat side and side head airbags may not be deployed. Some examples are listed below:

- Side impacts at certain angles.
- Side impact with motorcycles.

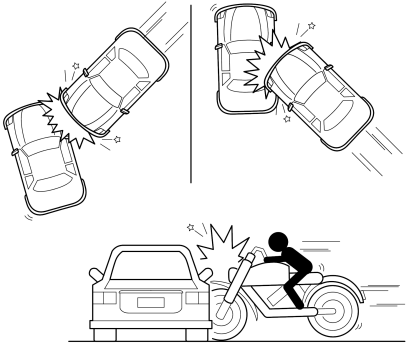

- Impacts that are not central to the side of the vehicle, either too far toward the front compartment or the trunk.
- The vehicle rolling over.

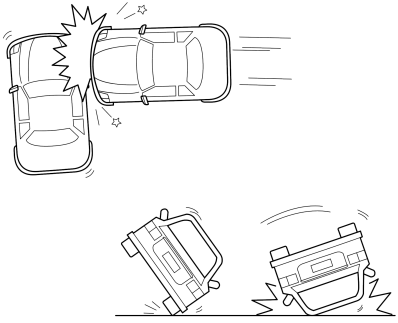

- Frontal collision at an angle with guard bars.
- Side collision with posts.

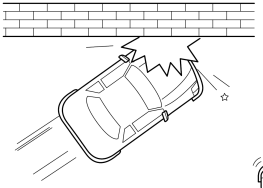

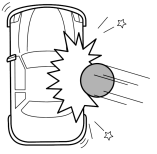

- The impact is not of sufficient force (with another vehicle, stationary or moving).
- The impact is from the rear of the vehicle.

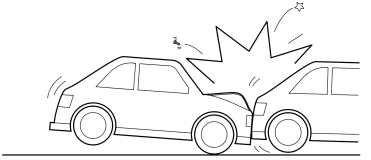

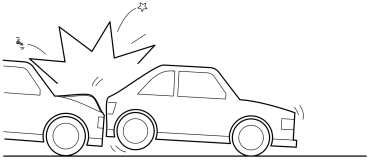

Disabling the Passenger Airbag*

The Passenger Airbag should only be disabled when a rear facing child seat is fitted to the front passenger seat.

When an adult is seated in the front passenger seat, ensure that the airbag is switched on.

The front passenger side airbag disable switch is set in the intelligent display, it can be turned on or off by using the relevant button on the display.

- When the passenger airbag is disabled, the OFF indicator light illuminates.
- When the passenger airbag is enabled, the ON indicator light illuminates.

Service and Replacement of Airbags

Service of SRS components

DO NOT install or modify the airbag. Any changes to the vehicle structure or airbag system wiring harness are strictly prohibited.

Changes to vehicle structure is prohibited. This may affect the normal operation of the SRS.

DO NOT allow these areas to be flooded with liquid and DO NOT use petrol, detergent, furniture cream or polishes.

If water enters the vehicle, it may cause damage to the SRS. In this case, even if the collision does not occur, the airbag may be accidentally deployed. Immediately shut down the power system and disconnect the battery cable; do not try to start the power system. Seek a local Authorised Repairer for service.

If the airbag warning lamp fails to illuminate or remains on, or there is any damage in the front or side of the vehicle and the cover of airbag module has any sign of damage, contact an authorised repairer immediately.

IMPORTANT
• The removal or replacement of an airbag module should be carried out by an authorised repairer. • After 10 years from the initial date of registration (or installation date of a replacement airbag), some components will need to be replaced by an authorised repairer. The appropriate page of the Service Portfolio or Digital service Records must be signed and stamped, or updated once the work has been completed.

Replacement of SRS components

Even if the airbag does not deploy, collisions may cause damage to SRS in the vehicle. Airbags may not function properly after damage and can not protect you and other passengers when a second collision occurs, which may cause serious injury or even death. To ensure that SRS can function properly after collision, please go to local authorised repairer to check airbags and repair as necessary.

Airbags are designed for using once only. Once the airbag has deployed, you must replace SRS parts. Please go to local authorised repairer for replacement.

Child Restraint - For Australia

Important Safety Instructions about Using Child Restraints

It is recommended that children below the age of 10 years old should be seated on the rear seat of the vehicle, in a child restraint system appropriate to the children's age, weight and height. Infants less than 2 years old should be restrained in an infant child restraint system.

It is recommended that a child restraint system that complies with AS/NZS 1754-2013 standard are fitted in this vehicle. Check markings on the child restraint system. When selecting a child restraint, please check the relevant labels or instructions on the restraint regarding the applicable height range for children and usage methods.

When installing and using a child restraint, it is necessary to comply with relevant laws and regulations, the instructions supplied by the child restraint manufacturer and the instructions on children's safety in this manual.

The correct use of child restraints will greatly reduce children's injury risk in accidents or relieve their injury severity. Please pay attention to the following when you use child restraints:

- It is recommended that children shorter than 1.5 meters (or under 10 years of age) should use the appropriate child restraint and cannot use a regular seatbelt, otherwise it may cause injury to the abdomen and neck.
- Never let children ride in an unprotected situation. Care should not be neglected because of children sitting on the child restraint.
- Only one child may be carried in any one restraint.
- DO NOT put the child on the lap or in arms when sitting in any seat.
- Proper child restraints can provide protection for your children.
- The relevant front seat may need to be adjusted forwards for installing the rear-facing child restraint to the rear seats.
- The position of seat head restraints may need to be adjusted for installing the forward facing child restraint to the rear seats.
- Never let your child stand or kneel on the seat when driving, otherwise, your child may be tossed and thus

lead to injury to their own and other people or even death when an accident occurs

- If a child's body leans forward or the posture is not correct during driving, an accident will increase the risk of injury.
- The method of using seat belts has a great influence on the maximum protection offered by the seat belt, you must comply with the child restraint manufacturer's instructions on proper use of seat belts. If seat belts are not properly fastened, even a minor traffic accident may lead to injury.
- Child restraints that are not fitted correctly may move and injure other occupants in the event of an accident or emergency braking. Therefore, even if there is no infant or child in the child restraint, it should be fitted properly and securely in the vehicle.

Warnings and Instructions on Use of Child Restraint on Front Passenger Seat

NEVER use a rearward facing child restraint on the front passenger seat with the front passenger airbag activated, otherwise DEATH or SERIOUS INJURY to the CHILD may occur.

Use one child restraint per child.

Please study the safety warning label on the sun visor. Always install the child restraint in the rear seat for security reasons.

Important Instructions on Children's Safety and Side Airbags

Children should not be allowed in areas where side airbags may be deployed, there is a risk of serious injury.

Only recommended child restraints suitable for the age, height and weight of the child should be used and firmly fixed in the vehicle.

DO NOT place any items in areas where side airbags may be deployed, there is a risk of serious injury.

In the event of a side collision, the side airbags can provide better protection for the passenger. However, when the airbag is triggered, a very strong expansion force is generated, if the passenger's seating position is not correct, the airbags or items in the side airbag deployment area may cause injury.

Therefore, only the correct child restraint must be used to secure the child correctly in the rear seat whilst ensuring the child's seating position is correct and there is enough space between the child and the side airbag deployment area for the airbag to deploy without any hindrance in a traffic accident this will provide the best protection.

Fixing Child Restraints

Secured Using Lap and Shoulder Belts

Please DO NOT put the rearward facing child restraint on the front passenger seat with the front passenger airbag activated, this may cause serious injury or even death.

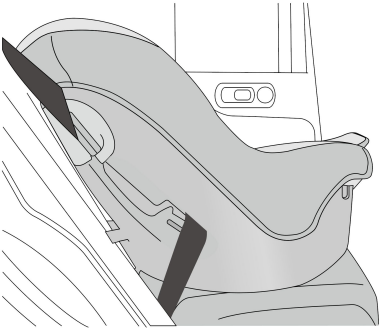

The child restraint can be secured to the rear seat by thelap and shoulder belts.

Secured with ISOFIX/i-Size Device

The ISOFIX anchorages in the rear seat are designed for use with ISOFIX systems only.

Child restraint anchorages are designed to withstand only those loads imposed by correctly fitted child restraints. Under no circumstances are they to be used for adult seat belts, harnesses, or for attaching other items or equipment to the vehicle.

The second-row seats of this vehicle on both sides are provided with ISOFIX/i-Size interface (as indicated by the arrow in the figure below) connected to the ISOFIX/i-Size child restraint. When installing and removing any child restraint system, always follow the manufacturer's instructions

- Remove the fabric cover to reveal ISOFIX mounting brackets.
- Fasten vehicle-approved ISOFIX child restraint systems to the mounting brackets.
- When using ISOFIX mounting brackets for seat mounting, universally approved child restraint systems for ISOFIX may be used.

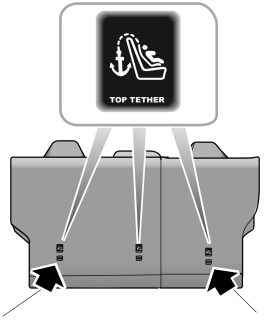

- The Top-tether (as arrowed in the figure above) for auxiliary fixation of the child restraint is provided at the back of the rear seat backrest. The single top-tether of the child restraint must pass through space between the rods of the rear seat headrest and dual tether must pass from both sides of the rear seat headrest.

  Note: When using seat mounted, universally approved child restraint systems, the top tether must be used.

- After the installation, push or shake the child restraint with moderate force to confirm it is properly secured.

Child Restraint Groups and Installation Position

Only approved child restraints suitable for children are allowed. Children over 10 years old may directly use the seat belts in the vehicle. Child restraints shall comply with relevant regulations or standards, such as Australia regulations AS/NZS 1754-2013.

Recommended Child Restraint Systems

AS/NZS 1754-2013 Classification based on a child age

Group	Recommended restraint
Type A (Birth to 12 months)	Britax Safe n Sound Unity
Type B (Birth to 4 years of age)	MaxiCosi Moda
Type E (4 to 8 years of age)	Britax Safe n Sound Hi-Liner SG
Type F (4 to 10 years of age)	Britax Safe n Sound Kid Guard

Note:

For the best protection, it is recommended to use this child restraint system with the included backrest. The side impact extensions should be used and extended tothe outermost when in use.

Suitable Seats for Attaching Child Restraint Systems

	Seat Position			
Seat Position	**Front Driver**	**2nd Row Left**	**2nd Row Centre**	**2nd Row Right**
Seating position suitable for univeral belted (Yes/No)	No	Yes	No	Yes
I-Size seating position (Yes/No)	No	Yes	No	Yes
Seating position suitable for lateral fixture (L1/L2)	No	No	No	No
Largest suitable rearward facing fixture (R1/R2x/R2/R3)	No	R3	No	R3
Largest suitable forward facing fixture(F1/F2x/F2/F3)	No	F3	No	F3

	Seat Position			
Seat Position	**Front Driver**	**2nd Row Left**	**2nd Row Centre**	**2nd Row Right**
Largest suitable booster fixture(B2/B3)	No	B2/B3	No	B2/B3

Note:

- [2] Only applicable for installation with seat belt.
- During the installation of the CRS, the backrest angle of seats should be adjusted reasonably to ensure that the CRS remains stable.
- During the installation of the CRS, the height of the headrest should be adjusted reasonably or the headrest should be removed to avoid interference with the CRS. Do not remove the head restraint when using a booster cushion with no backrest. Ensure all removed head restraints are stowed safely. Refit the head restraint oncethe CRS has been removed.

Child Restraints - For UK and Others

Important Safety Instructions about Using Child Restraints

It is recommended that children below the age of 12 years old should be seated on the rear seat of the vehicle, in a child restraint system appropriate to the children's age, weight and height. Infants less than 2 years old should be restrained in an infant child restraint system.

It is recommended that a child restraint system that complies with UN or ECE-R 129 standard are fitted in this vehicle. Check markings on the child restraint system. When selecting a child restraint, please check the relevant labels or instructions on the restraint regarding the applicable height range for children and usage methods.

When installing and using a child restraint, it is necessary to comply with relevant laws and regulations, the instructions supplied by the child restraint manufacturer and the instructions on children's safety in this manual.

The correct use of child restraints will greatly reduce children's injury risk in accidents or relieve their injury severity. Please pay attention to the following when you use child restraints:

- It is recommended that children shorter than 1.5 meters (or under 12 years of age) should use the appropriate child restraint and cannot use a regular seatbelt, otherwise it may cause injury to the abdomen and neck.
- Never let children ride in an unprotected situation. Care should not be neglected because of children sitting on the child restraint.
- Only one child may be carried in any one restraint.
- DO NOT put the child on the lap or in arms when sitting in any seat.
- Proper child restraints can provide protection for your children.
- The relevant front seat may need to be adjusted forwards for installing the rear-facing child restraint to the rear seats.
- The position of seat head restraints may need to be adjusted for installing the forward facing child restraint to the rear seats.
- Never let your child stand or kneel on the seat when driving, otherwise, your child may be tossed and thus

lead to injury to their own and other people or even death when an accident occurs

- If a child's body leans forward or the posture is not correct during driving, then an accident will increase the risk of injury.
- The method of using seat belts has a great influence on the maximum protection offered by the seat belt, you must comply with the child restraint manufacturer's instructions on proper use of seat belts. If seat belts are not properly fastened, even a minor traffic accident may lead to injury.
- Child restraints that are not fitted correctly may move and injure other occupants in the event of an accident or emergency braking. Therefore, even if there is no infant or child in the child restraint, it should be fitted properly and securely in the vehicle.

Warnings and Instructions on Use of Child Restraint on Front Passenger Seat

NEVER use a rearward facing child restraint on the front passenger seat with the front passenger airbag activated, otherwise DEATH or SERIOUS INJURY to the CHILD may occur.

Use one child restraint per child.

Only the car equipped with front passenger airbag switch can consider installing child restraint on front passenger seat, and before installing a child restraint on the front passenger seat, deactivate the front passenger airbag function first or severe injury or even death can occur.

Once the child restraint is removed from the front passenger seat, reactivate the front passenger airbag.

When installing a child restraint on the front passenger seat, move the front passenger seat as far rearward as possible.

Please study the safety warning label on the sun visor. Always install the child restraint in the rear seat for security reasons. The above warning shall be noted in a special case when the child restraint must be used on front passenger seat.

Important Instructions on Children's Safety and Side Airbags

Children should not be allowed in areas where side airbags may be deployed, there is a risk of serious injury.

Only recommended child restraints suitable for the age, height and weight of the child should be used and firmly fixed in the vehicle.

DO NOT place any items in areas where side airbags may be deployed, there is a risk of serious injury.

In the event of a side collision, the side airbags can provide better protection for the passenger. However, when the airbag is triggered, a very strong expansion force is generated, if the passenger's seating position is not correct, the airbags or items in the side airbag deployment area may cause injury.

Therefore, only the correct child restraint must be used to secure the child correctly in the rear seat whilst ensuring the child's seating position is correct and there is enough space between the child and the side airbag deployment area for the airbag to deploy without any hindrance in a traffic accident this will provide the best protection.

Fixing Child Restraints

Secured Using Lap and Shoulder Belts

Please DO NOT put the rearward facing child restraint on the front passenger seat with the front passenger airbag activated, this may cause serious injury or even death.

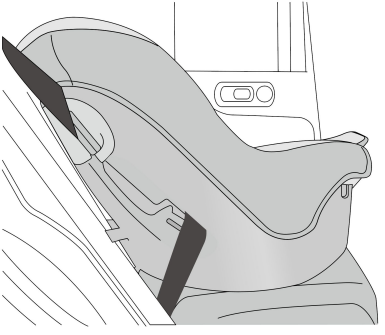

The child restraint can be secured to the rear seat by the lap and shoulder belts.

Secured with ISOFIX/i-Size Device

The ISOFIX anchorages in the rear seat are designed for use with ISOFIX systems only.

Child restraint anchorages are designed to withstand only those loads imposed by correctly fitted child restraints. Under no circumstances are they to be used for adult seat belts, harnesses, or for attaching other items or equipment to the vehicle.

The second-row seats of this vehicle on both sides are provided with ISOFIX/i-Size interface (as indicated by the arrow in the figure below) connected to the ISOFIX/i-Size child restraint. When installing and removing any child restraint system, always follow the manufacturer's instructions

- Remove the fabric cover to reveal ISOFIX mounting brackets.
- Fasten vehicle-approved ISOFIX child restraint systems to the mounting brackets.
- When using ISOFIX mounting brackets for seat mounting, universally approved child restraint systems for ISOFIX may be used.

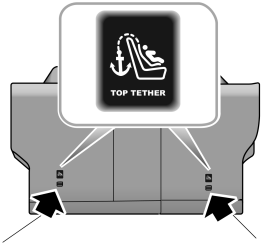

- The Top-tether (as arrowed in the figure above) for auxiliary fixation of the child restraint is provided at the back of the rear seat backrest. The single top-tether of the child restraint must pass through space between the rods of the rear seat headrest and dual tether must pass from both sides of the rear seat headrest.

Note: When using seat mounted, universally approved child restraint systems, the top tether must be used.

- After the installation, push or shake the child restraint with moderate force to confirm it is properly secured.

Child Restraint Groups and Installation Position

Only approved child restraints suitable for children are allowed. Children taller than 1.5 m may directly use the seat belts in the vehicle. Child restraints shall comply with relevant regulations or standards, such as EU regulations ECE-R129.

Recommended Child Restraint Systems

ECE-R129 Classification based on a child height

Children's Height	Recommended Child Restraint
40~83cm	Maxi Cosi Pebble 360
76~105cm	Britax Römer TriFix [2] i-Size
100-150cm	Britax Kidfix i-Size OEM version [1]

Note:

[1] If you need to purchase OEM child restraint (order part number: 2000036803), please consult the local authorized repairer.

Suitable Seats for Attaching Child Restraint Systems

	Seat Position					
Seat Position	Front Driver	**Front Passenger** [1]		**2nd Row Left**	**2nd Row Centre**	**2nd Row Right**
		With Front Passenger Airbag Activated	**With Front Passenger Airbag Deactivated***			
Seating position suitable for univeral belted (Yes/No)	No	Yes (Forward facing only)	Yes	Yes	No	Yes
I-Size seating position (Yes/No)	No	No	No	Yes	No	Yes
Seating position suitable for lateral fixture (L1/L2)	No	No	No	No	No	No
Largest suitable rearward facing fixture (R1/R2x/R2/R3)	No	No	No	R3	No	R3

	Seat Position					
Seat Position	Front Driver	**Front Passenger** [1]		**2nd Row Left**	**2nd Row Centre**	**2nd Row Right**
		With Front Passenger Airbag Activated	**With Front Passenger Airbag Deactivated***			
Largest suitable forward facing fixture(F1/F2x/F2/F3)	No	No	No	F3	No	F3

Seat Position	Seat Position					
	Front Driver	Front Passenger [1]		2nd Row Left	2nd Row Centre	2nd Row Right
		With Front Passenger Airbag Activated	With Front Passenger Airbag Deactivated*			
Largest suitable booster fixture(B2/B3)	No	(B2/B3) [2]	(B2/B3) [2]	B2/B3	No	B2/B3

Note:

- [1] When installing a CRS on the front passenger seat, move the front passenger seat as far back and as high as it can be adjusted to securely install the CRS. And move the backrest to the upright position. Set the seat belt heights so that the seat belt routing follows a natural path adapted to the child seat without excessive deviations. For rear-facing child seats, use the lowest position of the belt height adjuster.
- [2] Only applicable for installation with seat belt.
- During the installation of the CRS, the backrest angle of seats should be adjusted reasonably to ensure that the CRS remains stable.
- During the installation of the CRS, the height of the headrest should be adjusted reasonably or the headrest should be removed to avoid interference with the CRS. Do not remove the head restraint when using a booster cushion with no backrest. Ensure all removed head restraints are stowed safely. Refit the head restraint oncethe CRS has been removed.

Child Proof Locks

NEVER leave children unsupervised in the car.

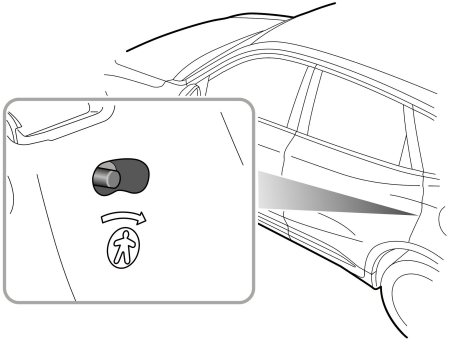

Enabling or disabling the child proof locks

- Open the relevant rear door, toggle the child proof lock lever in the direction of the arrow to the lock position to engage the child proof lock;
- Move the lever in the reverse direction, to the unlock position to disable the child proof lock.

With the child proof lock engaged, the rear door on the corresponding side cannot be opened from inside the car, but can be opened from outside the car.

Body Stability Control System

The electronic stability control system includes Dynamic Stability Control System (SCS) and Traction Control System (TCS).

SCS is designed to assist the driver in control of driving direction. When SCS detects that the vehicle is not moving in the intended direction, it will intervene by applying brake force to selected wheels or through the power system to prevent sliding and stabilise the driving direction by correcting the under-steering or over-steering.

TCS contributes to maintaining control over the vehicle by improving the vehicle's traction trafficability and driving stability. TCS monitors the driving speed of each wheel individually. If spin is detected on one drive wheel, the system will automatically brake that wheel, transferring torque to the opposite, non-spinning wheel. If both wheels are spinning, the output torque of the power system will be reduced in order to regulate wheel rotation until traction is regained.

SCS and TCS are automatically switched on when the vehicle is powered on. It can be switched off by using the switch located on the entertainment display.

Note: For vehicles equipped with ACC function, when ACC function is activated, the SCS and TCS cannot be turned off.

Note: For vehicles equipped with ACC function, when SCS and TCS are turned off, the normal operation of ABS will not be affected. It is recommended to disable SCS and TCS if the vehicle is fitted with snow chains.

Antilock Brake System (ABS)

When travelling at high speed or there is a danger of aquaplaning, i.e. where a layerof water prevents adequate contact between the tyres and the road surface, ABS cannot overcome the physical limitations of stopping the car in a short distance. In these cases, it is the responsibility of the driver to maintain a safe distance from other vehicles.

DO NOT pump the brake pedal at any time, this will interrupt the operation of ABS and may increase the braking distance.

The ABS is mainly used to automatically adjust the braking force of each brake when braking to prevent the wheels from being locked, thus avoiding dangerous situations such as loss of direction or side slip during emergency braking.

This system enables the driver to maintain control over the steering in case of emergency braking, keeps the vehicle stable, and improves the safety factor.

Under normal braking conditions, ABS will not be activated. However, if the braking force exceeds the adhesion between the tyres and the road surface, causing the wheels to lock, the ABS will automatically come into operation. This will be recognisable by a rapid pulsation felt through the brake pedal.

If emergency braking is required, the driver should apply full braking effort to trigger the ABS even when the road surface is slippery.

Note: On loose gravel, loose soil or snowy roads, the braking distance of vehicles equipped with ABS system may be greater, even improved steering would be experienced.

IMPORTANT
• Although ABS can greatly improve driving safety, the real safety still depends on the driver's own standard driving behavior. • The normal braking system remains fully operational and is not affected by partial or full loss of anti-lock braking system (ABS).

Electronic Parking Brake (EPB)

In the event of EPB malfunction where EPB release is not possible, please consult an MG Authorised Repairer in order to carry out an emergency manual release of the parking brake.

The position of the EPB switch varies depending on the vehicle configuration and may be located on the center console or driver's knee trim panel.

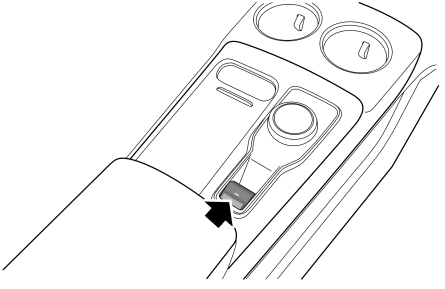

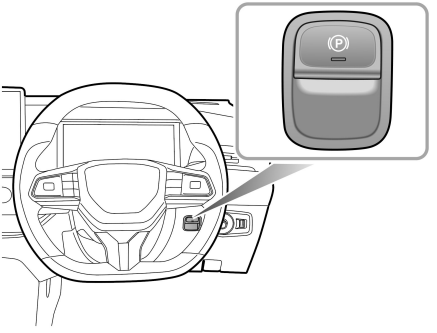

The EPB system can be operated using the following 2 ways:

- Manual operation: Pull up the EPB switch to apply the EPB system after the vehicle is parked safely. When the vehicle is powered on, press the brake pedal and press the EPB switch to released the EPB system.
- Automatic operation: Shift into P gear to apply the EPB system after the vehicle is parked safely. Park the vehicle safely on a flat road or a road with a small slope, start the power system, depress the brake pedal, and shift

into either gear other than P gear to release the EPB system.

If the indicator in the EPB switch and the indicator Ⓟ in the instrument pack illuminate, it indicates that the EPB system has been applied. If the indicator in the EPB switch and the indicator Ⓟ in the instrument pack go off, it indicates that the EPB system has been released.

Note: When leaving the vehicle, the EPB must be applied.

Note: An audible motor noise may be heard when applying or releasing the EPB.

Note: On a steep slope, shifting out of the P gear will not realse the EPB system. In this case, please realse the EPB system manually, or use the HHC function of EPB .

Note: On a steep slope, shifting out of the P gear will not release the EPB system. In this case, please release the EPB system manually, or use the HHC function of EPB .

Note: On a steep slope, shifting out of the P gear will not turn off the EPB system. In this case, please turn off the EPB system manually, or use the HHC function of EPB .

IMPORTANT
In the event of a flat battery or power failure, it is not possible to apply or release the EPB. In such a case, 'booster cables' should be used for emergency vehicle start. Please refer to 'Jump Start' in the 'Road Emergency Response' chapter.

Starting Aid

If the driver's seat belt is fastened, the power system is started, D or R gear is selected and the accelerator pedal is depressed for pull away, the EPB system will automatically release.

Emergency Braking Function

Inappropriate use of EPB can lead to accidents and injuries. DO NOT apply the EPB for vehicle braking whilst moving, unless in an emergency.

During emergency braking using the EPB, DO NOT switch off the ignition/power system, this could result in serious injury.

In the event of normal brake failure during driving, emergency braking can be initiated by pulling the EPB switch upward and holding. An audible warning will sound during emergency braking. The braking process will be cancelled by releasing the EPB switch.

Auxiliary Braking System

The auxiliary braking system consists of the Electronic Brake Force Distribution System (EBD) and Electronic Brake Assistance System (EBA).

The EBD automatically distributes the braking force between the front and rear axles, so that the vehicle uses optimum braking performance under different load conditions.

The EBA increases the braking force applied on each wheel during emergency braking to assist the driver in quickly triggering ABS , thereby shortening the braking distance.

Auto Hold

The auto hold function cannot guarantee the stability of the vehicle when starting off or braking on hills especially on slippery or icy surfaces.

When auto hold stops the vehicle, if the electronic parking brake is applied for any reasons (such as powertrain shutdown, releasing the seat belt or turning off the auto hold function, etc.), it cannot be guaranteed that the vehicle will be stabilised in all cases. For example, the rear wheels are on an icy, snowy or slippery road surface, or the parking slope is high. Please make sure that the vehicle is safely stabilised prior to exiting.

DO NOT leave the vehicle when in READY mode and the auto hold is active.

Auto hold cannot guarantee the automatic operation of the electronic parking brake in all cases where the powertrain is shut down. Please ensure the electronic parking brake is applied and the vehicle is stablised prior to exiting the vehicle.

The auto hold function should be switched off during the use of automatic car washes, the electronic parking brake may suddenly apply and cause vehicle damage.

If the vehicle is required to stop frequently for long periods while driving (such as waiting at traffic lights, stopping on a slope or in urban stop-and-go conditions), the Auto Hold function can assist you in stabilising the vehicle, enabling you to remove your foot from the brake pedal when the vehicle is stationary and the Auto Hold is active.

Auto Hold has 3 states as follows:

1 **Standby:** When the driver's seat belt is fastened, the driver's door is closed and the vehicle is powered on, turn on the auto hold function in the intelligent display to switch it from OFF to the Standby state. In this

state, the white indicator light Ⓐ on the instrument pack illuminates.

2 **Parking:**

- When the vehicle is moving forward, depress the brake pedal to a certain depth. After the vehicle has come to a complete standstill, the Auto Hold function is switched from the Standby to the Parking state. In this state, the green indicator Ⓐ on the instrument pack illuminates.
- When the auto hold is in the Parking state, engaging D gear and depressing the accelerator pedal will automatically release the auto hold function based on the gradient.
- The Auto Hold will automatically release from the Parking state if R gear is selected.

3 **OFF:** Turn off the auto hold function in the intelligent display.

The Auto Hold will exit the parking state under some circumstances such as unfastening the seat belt, turning off the power system, remaining static for a length of time or pressing the Auto Hold switch. At this time, the EPB will be applied.

Note: With the brake pedal depressed, turn off the Auto Hold on the intelligent display, the function will be disabled but the electronic parking brake will not be applied.

Note: When the vehicle is in R gear, the Auto Hold function will not be triggered.

Hill Hold Control (HHC)

It is impossible for HHC to keep the vehicle in a standstill state under all circumstances (e.g. slippery ground, snow and ice, etc.) when going uphill and the driver must constantly pay attention to the vehicle condition.

With the HHC in action, the driver is strictly prohibited from leaving the vehicle, otherwise serious accidents may occur.

During a hill start under a stop-and-go road condition, please press the brake pedal strongly for several seconds before each start.

HHC assists the driver by 'holding' the vehicle during hill starts. If the driver releases the brake pedal, the HHC will hold the vehicle stationary for a short time.

HHC will be activated when the following conditions are met at the same time:

- The driver's seat belt has been fastened and the driver's door is closed.
- The vehicle is steadily brought to a stop on a slope.
- SCS is fault free.
- EPB is fault free and released.
- The vehicle is powered on.
- The vehicle is in D or R gear.
- Sufficient force has been applied on the brake pedal before start.

Note: The HHC can also work when the vehicle is reversing uphill.

Hill Descent Control (HDC)

HDC is only an auxiliary function, and it is not always possible to ensure that the vehicle can drive down a steep slope at low speed (e.g. slippery ground, snow and ice, or too steep a slope).

When HDC is in use, the driver must still pay close attention to the driving state of the vehicle, and take active control when necessary. Because in certain cases, HDC may remove itself from the operating state temporarily.

Under some downhill driving conditions (e.g. driving down a slope at high speed, or the slope is relatively small), HDC is inoperative, in this case the driver will be required to control the speed by depressing the brake pedal to ensure safe driving.

HDC system is an auxiliary function designed for vehicles running on acute downhill surfaces. It reduces the speed by applying brake force, thus assisting the driver to drive on acute downhill surfaces smoothly.

Note: When HDC is working, it is normal for the brake system to generate slight vibration or working noise.

Note: When HDC is working, do not shift to N gear, since this operation will deactivate the HDC function.

HDC function is OFF by default, and can be turned ON by operating the button on the entertainment display after the vehicle is powered on.

HDC system has four states as follows:

1 Standby:
Press the HDC button to enable the function and enter in into the standby state. In this state, the indicator on the instrument pack illuminates in green.

2 Operating:
In Standby mode, when the vehicle drives on the acute downhill surface at low speed, if the driver does not depress the brake pedal or the accelerator pedal, HDC automatically enters into the Operating state. Meanwhile, the indicator on the instrument pack flashes in green, this may be accompanied by the working noise of the brake system, and the vehicle drives down the acute downhill surface smoothly.

3 Temporary Deactivation:

Depress the accelerator pedal or brake pedal to a certain extent iwhilst in the Operating state, HDC will temporarily deactivate itself from the Operating state.

4 Off:

Press the HDC button again to disable the function.

Note: When the vehicle steers at a fast speed on the hill with a certain gradient, HDC may switch from Standby Status to Operating Status.

Note: When HDC is working, the brake system will automatically pressurize and hold, you may feel pressure feedback when depressing the brake pedal at this time, which is normal.

Active Rollover Protection (ARP)

The ARP system is a driver aid to assist the stability of thevehicle under extreme conditions. It is not a guarantee that the vehicle will not roll over.

When the vehicle is at risk of rollover during dynamic driving (such as lane change) or steady driving (such as loop driving), the ARP will automatically brake the outside wheels to cause the vehicle to understeer and prevent rollover.

Note: When ARP is working, the vehicle may under-steer and it is normal if it fails to steer fully according to the intent of the driver.

Emergency Braking Hazard Warning Strobe (HAZ)

If the driver makes an emergency braking manoeuvre and certain conditions are met while driving, the brake lamps will automatically flash quickly to alert the drivers behind, thereby reducing the occurrence rate of rear-end collisions.

Note: If the hazard warning lamps are being operated manually, this suspends the HAZ function.

After the HAZ function is activated, when the emergency braking manoeuvre is exited, the brake lamps will stop flashing after several seconds.

Note: As the car speed drops to below 6 mph (10 km/h) and the system no longer flashes the brake lamps, the hazard warning lamps will illuminate automatically. Short press the hazard warning lamp switch or increase your speed to above 12 mph (20 km/h) for 5 s to switch off the hazard warning lamps.

Multi-Collision Brake System (MCB)

The MCB function will automatically apply braking to reduce the vehicle speed and improve the vehicle stability after a collision, aiming to reduce the risk of a secondary collision caused by loss of control of the vehicle..

The MCB function is activated only when the following conditions are met at the same time:

- The airbag is deployed after a vehicle collision;
- The vehicle speed is less than 37 mph (60 km/h);
- The steering wheel has not turned by more than 180° ;
- SCS is fault-free.

If the driver presses the accelerator pedal hard after triggering the MCB function, the system will exit the braking state.

Note: The MCB function cannot guarantee that the vehicle will slow down in all collision situations, as the collision may cause some parts to malfunction or fail, affecting the normal operation of the function.

Pedestrian Alert Control System

In order to improve the safety, your car is fitted with aPedestrian Alert System. When the vehicle is travelling ata low speed, the system controls a speaker that sounds toremind pedestrians in the vicinity of your presence.

The pedestrian alert speaker will sound when all of the following conditions are met:

1 The vehicle is in READY state;

2 The pedestrian alert system is fault free;

3 During acceleration, the vehicle speed is less than 18mph (30 km/h); during deceleration, the vehicle speedis less than or equal to 15 mph (25 km/h).

Tyre Pressure Monitoring System (TPMS)

TPMS can not replace routine maintenance and checks of the tyre condition and pressure.

Using a device with the radio frequency similar to that of TPMS inside or near the vehicle may interfere the operation of tyre pressure monitoring system, leading to temporary failure alarm.

TPMS monitors the tyre pressure through a radio wave and sensing technique. TPMS sensors can monitor the pressure of vehicle's tyre and send it to a receiver in the vehicle. You can view the tyre pressure data via the instrument pack or on-board entertainment display. TPMS can remind you of low tyre pressure, but it can not replace normal tyre maintenance. For tyre maintenance, please refer to 'Tyres' in 'Maintenance' chapter.

Note: TPMS only gives the driver a warning when the tyre pressure is low, it will not inflate the tyre.

If the TPMS malfunction indicator lamp illuminates, and the warning message " XX Tyre Pressure Low" is displayed, it is advised that you please stop the car as soon as possible, check the tyre pressures and inflate the affected tyre to the standard pressure value. The tyre pressure label attached to the B pillar indicates the standard pressure value required by your vehicle tyres when they are cold.

Driving with under-inflated tyres may cause the tyre to overheat and become faulty. In addition, under-inflated tyres wear out more rapidly and also have a detrimental effect on the car's handling characteristics and brake performance which, in turn, increases power consumption.

TPMS Self-learning

When replacing a TPMS sensor or receiver, or performing tyre rotation, TPMS self-learning is required. The self-learning can be performed by the following means:

1 The vehicle is powered off and locked for 25 minutes.

2 Drive the car making numerous turning manoeuvres ensuring the speed exceeds 25 mph (40 km/h) for 15 min.

Note: Ensure that the TPMS sensor is an original factory component.

Note: If self-learning fails, the TPMS malfunction indicator lamp will illuminate, please try repeating the above operations.

If you have any questions during the self-learning, please consult an MG Authorised Repairer for more details.

Comfort Systems

Seat Adjustment *206*

Ventilation System *210*

A/C Control Panel *213*

A/C Control Interface *215*

Steering Wheel Entertainment Control Buttons *218*

Intelligent Display *219*

Seat Adjustment

Front Seats

Note: Due to different model configurations, the function of the front seats are not completely identical.

Electric Adjustment (with the driver side as an example)

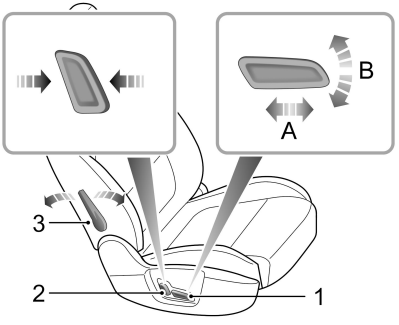

- Forward/Rearward Adjustment

  Push the switch (1) forward or backward (A) to movethe seat forward/backward.
- Cushion Height Adjustment

  Pull the switch (1) upward or push downward (B) toraise or lower the seat cushion.
- Backrest Angle Adjustment

  Move the switch 2 forward/backward to adjust the backrest until it reaches the desired angle.
- Lumbar Support Adjustment*

  Move the lever 3 to adjust the level of the lumbar support.

Manual Adjustment (with the driver side as an example)

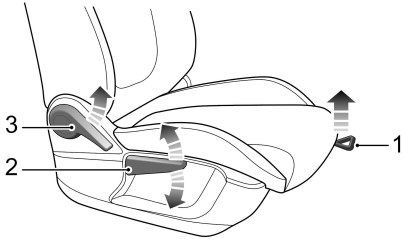

- Forward/Rearward Adjustment
  Lift the lever 1 under the seat cushion, slide the seat into an appropriate position and release the lever. Make sure that the seat is locked in place.
- Cushion Height Adjustment*
  Lift the handle 2 repeatedly to raise the seat cushion; and press the handle 2 repeatedly downward to lower the seat cushion.
- Backrest Angle Adjustment
  Lift the handle 3 to adjust the backrest to an appropriate angle; and release the handle ensuring that the backrest is locked in position.

Rear Seats

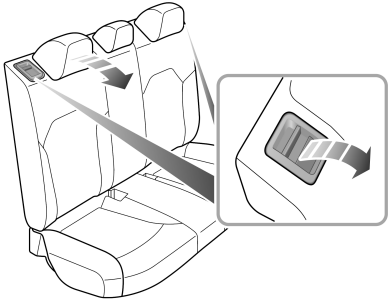

- Folding Rear Seats

  To increase the luggage space, the rear seat backrest can be fully folded forward. When folding the backrest completely insert the rear seat belt buckles into the corresponding clasps first, then pull the respective control lever at the top of the seat backrest upwards and fold the seat backrest forward.

Note: When the rear seat headrests are not fully lowered or the front seat backrest is inclined backward excessively, the folding of the rear seat is very likely to damage the back of the front seat or the rear seat headrest.

- Unfolding and locking rear seat backrests

  To return the backrest to an upright position, raise the rear seat backrest. When the desired upright position is reached, a 'click' will be heard. Ensure the backrest is locked in position.

Note: When returning the rear seat backrest to the desired position, make sure that the rear seat belts are not trapped.

Seat Heating Function*

If bare skin is in contact with the heated seats for excessive periods of time, it may cause burns.

The seat heater switch is located on the Seat Control interface of the intelligent display. After the vehicle is set to READY mode, the heating function of the corresponding side seat can be turned on/off and adjusted. When the seat cushion or backrest reaches a certain temperature, the heating function will be deactivated automatically.

IMPORTANT
• Do not cover the heated seats with blankets, cushions or other insulation type objects or materials. • When the seat heating function is used for an extended period of time, if the seat exceeds certain temperature and continues getting hotter, please turn off the heating switch and contact an MG Authorised Repairer. • Overuse of the driver's heated seat may cause drowsiness and could affect safety.

Headrest Operation

Adjust the height of the head restraint so that the top of it is in line with the top of the occupant's head. This location may reduce the risk of neck injuries in the event of a collision. Do not adjust or remove the head restraints while the car is moving.

Do not hang anything on any head restraint or head restraint rod.

The headrest is designed to prevent rearward movement of the head in the event of a collision or emergency braking, thereby reducing the risk of head and neck injuries. The height of split type headrests can be manually adjusted.

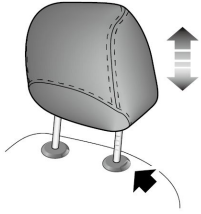

When adjusting a headrest from low to high position, pull the headrest directly upward, and gently press it downward after it reaches the desired height to make sure that it is locked in position. To remove the headrest, press and hold the guide sleeve button (as indicated by the arrow) on the left of the headrest, then pull the headrest upward to remove it.

When adjusting a headrest from a high to low position, press the guide sleeve button (as indicated by the arrow) on the left of the headrest, and press the headrest downward; release the button after it reaches the desired height, and gently press the headrest downward to make sure that it is locked in position.

Ventilation System

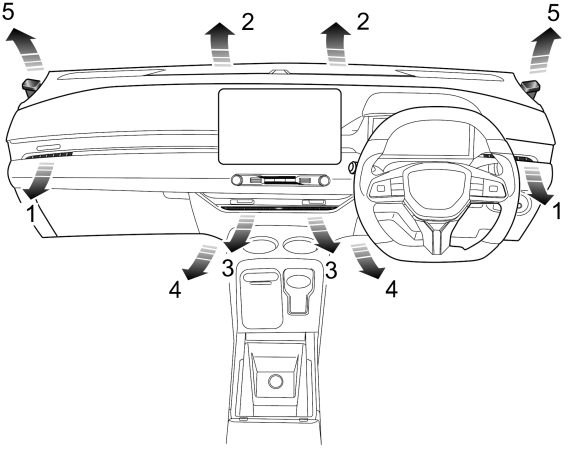

1 Side Vents
2 Front Windscreen Vents
3 Centre Vents
4 Front Footwell Vents
5 Front Window Side Vents

The A/C system is used to adjust the temperature, blower speed, humidity and cleanliness of the air inside the car.

Fresh air is drawn in through the air intake grille under the front windscreen and filtered by the A/C filter element.

Always keep the air intake grille clear of obstructions such as leaves, snow or ice.

A/C Filter Element

The A/C filter element is used to filter the air. To remain fully effective, the filter element should be replaced at the recommended service interval.

Vents

Regulation of Centre Vents

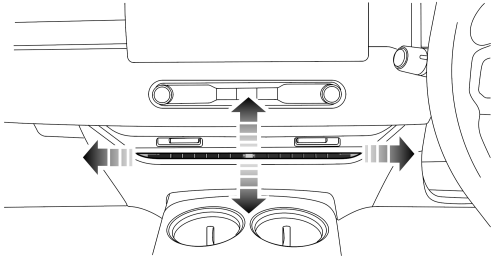

Toggle the knob of the vent from side to side to open or close the vent. Direct the air flow by moving the knob up and down or from side to side.

Regulation of Side Vents

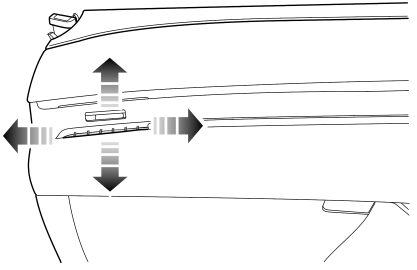

Toggle the knob of the vent from side to side to open or close the vent. Direct the air flow by moving the knob up and down or from side to side.

A/C Control Panel

Control Panel-Type 1*

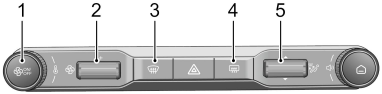

1 A/C On/Off Button and Temperature Control

2 Blower Speed Control

3 Defrost/Demist Button

4 Heated Rear Windscreen Button

5 Adjustment of Air Outlet Position

Control Panel-Type 2*

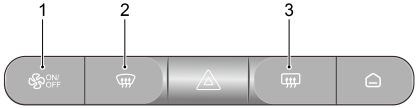

1 A/C On/Off Button and Temperature Control

2 Defrost/Demist Button

3 Heated Rear Windscreen Button

A/C On/Off Shortcut Button

Press the A/C On/Off shortcut button to operate the A/C, the system will be in the state as it was prior to the last switch off by default. Press again to switch the A/C system off.

Defrost/Demist Button

Press the Defrost/Demist button, the button indicator lamp will illuminate the A/C cooling and external circulation functions areswitched on and the system enters the most effectivewarm or cold air setting to clear the windshield and side window.

Pressing the Defrost/Demist button again will exit the defrost/demist function and the system will return to the previous state.

In defrost/demist mode, operating the temperature control and switching between internal and external circulation modes will not exit the defrost/demist function; operating the air distribution mode will exit the defrost/demist function.

Heated Rear Windscreen Button

The heating elements on the inside of the rear window are easily damaged. DO NOT scrape or scratch the inside of the glass. DO NOT stick labels over the heating elements.

Press the heated rear windscreen button to enable or disable heated rear windscreen function. The function is enabled when the indicator illuminates and is disabled when the indicator goes out. After the heated rear windscreen function is turned on, it will automatically turn off after running for a certain period of time.

Note: The heated rear window function will only operate when the vehicle is in the READY/RUNNING state.

A/C Control Interface

System On/Off

Touch the A/C System On/Off touch button to switch the A/C system On or Off.

Automatic Temperature Control Mode

Set the desired target temperature and tap the AUTO mode button to enable the automatic temperature control function. The system automatically adjusts the air distribution mode, blower speed, etc. to reach and maintain the set temperature.

To exit the AUTO temperature control mode, manually adjust the air distribution mode or blower speed and the AUTO indicator will extinguish.

Cooling or Heating On/Off

Touch the A/C control button to switch the heating or cooling function On or Off.

Air Distribution Mode

Touch the Air Distribution Mode button to switch between air distribution modes.

Touch Button Illuminated	Air Distribution Mode
	To ‘face’
	To ‘face + feet’
	To ‘feet’
	To ‘feet + windscreen’
	To ‘windscreen’

Air Circulation Mode

Touch the Air Circulation Mode button as required to switch between air circulation modes.

In the internal circulation mode, the A/C system circulates the air in the vehicle to achieve rapid cooling or heating, preventing any fumes or unclean air from entering the vehicle.

In the external circulation mode, the A/C system circulates the air inside and outside the vehicle to ensure the internal air is fresh.

During automatic circulation, the A/C system automatically adjusts internal or external circulation according to the actual situation.

Note: Leaving the system in internal recirculation mode can cause the windscreen to mist. If this happens, turn on the defrost/demist mode.

A/C Settings

Touch the A/C Settings button to enter the A/C Settings page where the preferred or suitable air conditioning operation mode can be customized.

The specific options in the A/C Settings are subject to vehicle configuration.

Blower Speed Control

Touch or drag the blower speed control bar to adjust the blower speed.

Temperature Control

Touch or drag the temperature control bar to regulate the air outlet temperature.

Double Finger Sliding

Double finger sliding can adjust air conditioning temperature and blower speed simultaneously: In addition to the reverse gear and 360 degree camera interface, any interface can be adjusted by lightly touching the screen with two fingers. Horizontal sliding can adjust air

conditioning blower speed, and vertical sliding can adjust air conditioning temperature.

Air Self Drying and Deodorisation

After the air self drying and deodorization function is turned on, switch the air conditioner off, but keep the blower running for a period of time to ensure that the evaporator and air ducts are dry, is helps to avoid bacterial growth and reduce any odours from the air conditioner.

Note: The air self drying and deodorization function may increase battery energy consumption. Please consider disabling this function based on the current vehicle status

Steering Wheel Entertainment Control Buttons

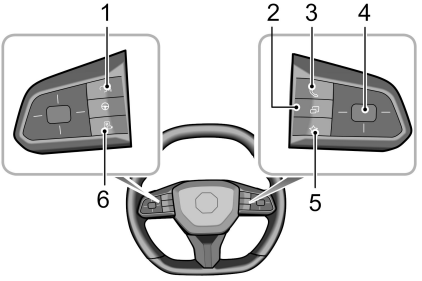

1 Speech Recognition
Short press to turn on the speech recognition; short press again to exit the speech recognition.

2 Instrument Display Card Button
For details, refer to the "Instrument Pack" section.

3 Bluetooth Phone
Short press to answer and long press to hang up.

4 Function Adjustment Button
Push up: Volume up; Push down: Volume down; Push to the left: Previous track; Push to the right: Next track; Short press: Mute or Unmute.

5 Right Custom Button
This function button can be customized in the Vehicle Settings on the entertainment display.

6 Left Custom Button
For vehicles equipped with 360 AVM, this button defaults to turning the 360 360 AVM on or off; for vehicles not equipped with 360 AVM, this button is ★ button, which defaults to opening/closing the Vehicle Settings interface. Other functions can be customized in the Vehicle Settings on the entertainment display.

Intelligent Display

Account

Login

In the login interface,enter Country Code, telephone number and Password to log in. You also can choose to enter your email address and Password to log in. Touch [Scan QR Code to Login] to switch login as scanning QR Code.

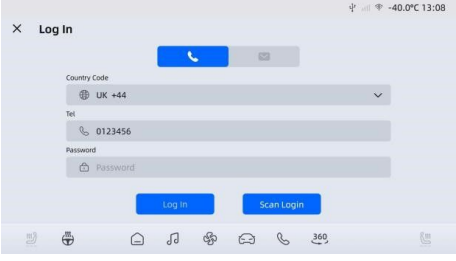

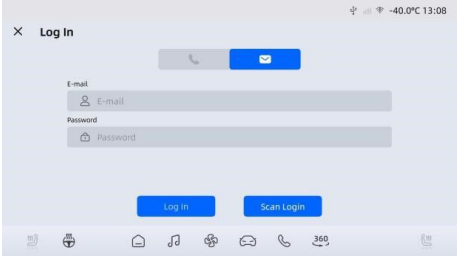

Open the MG iSMART APP and scan the QR code. After a successful scan , users will automatically be logged in and enter the homepage interface. Touch [Account Login] to login with account details.

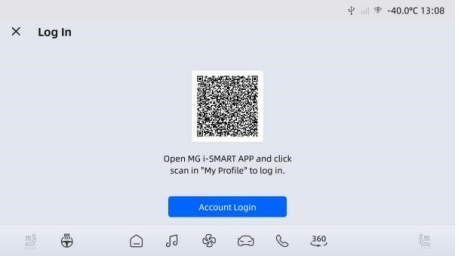

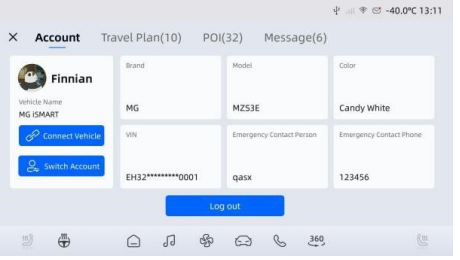

Account management

After a successful log in, users can connect to a vehicle, switch to a different account or log out.

Inbox

The Inbox provides access to Travel Plans, POI info, and Messages.

Travel Plan

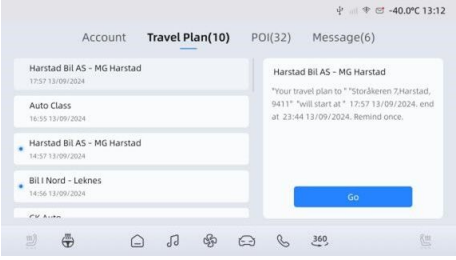

- Display any travel plans received from the APP.
- Left swipe to delete the current travel plan.
- Touch 'Go' to go to the POI listed in the travel plan using the navigation.

Point of Interest

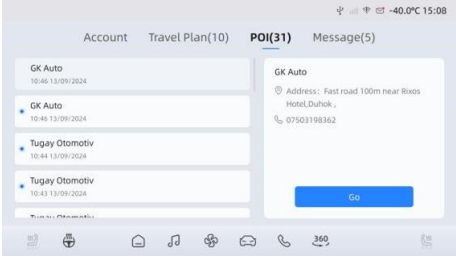

- Display any points of interest received from the APP.
- Left swipe to delete the current Point of Interest.
- Touch 'Go' to go to the Point of Interest using the navigation.

Message

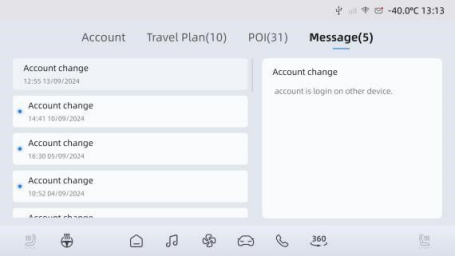

- Display any messages received from the APP.
- Unread message are highlighted.
- Left swipe to delete the message.

Weather

Weather home page

Click the weather module on the home page to enter the weather page. You can view the current weather report and weather forecast for the next 4 days. You can switch cities to search for the city you want to locate.

Weather search

- Click the search box to activate the the city search.

- Use the Celsius/Fahrenheit switch to select your preference.

Weather settings

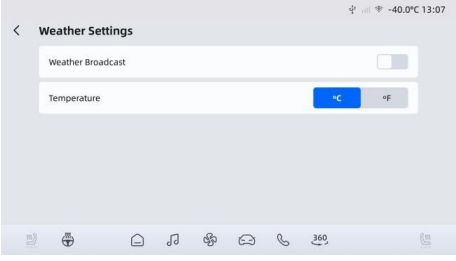

- Click the Weather Broadcast alert switch to enter Weather Broadcast alert.
- Click the Celsius/Fahrenheit switch to switch.

Online Entertainment application

Online Music

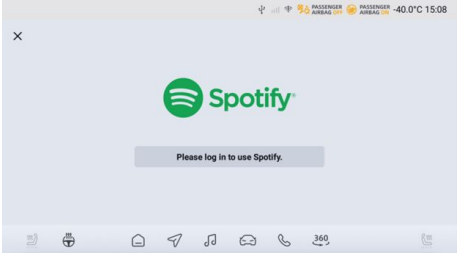

It allows you to listen to the preferred songs when driving.

You ust login with your own 3rd party music account. For example, if you want to use Spotify, then you should have your own Spotify account.

You can search songs that you like by song, album, artist or playlist in this interface.

The service level from these online music apps depends on your own 3rd party music account membership.

Oline Video

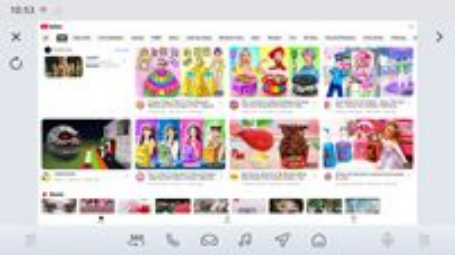

It allows you to browse video content in different categories.

You can search videos by keywords.

You should login with your own 3rd party video account. For example, if you want to use Youtube, then you should have your own Youtube account.

The service level from online vedio app depends on your own 3rd party video account membership.

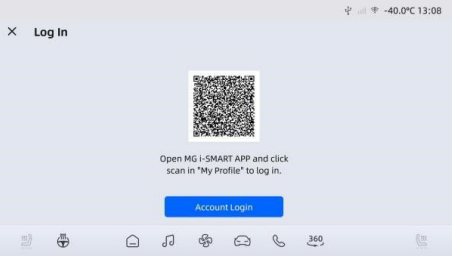

Update

Map and voice resource updates via USB is supported. The following preconditions must met to ensure update success.

- The remaining power is no less than 14% ;
- The vehicle must be in “Ready” mode;
- vehicle is stationary;
- The vehicle is in Park or Neutral.

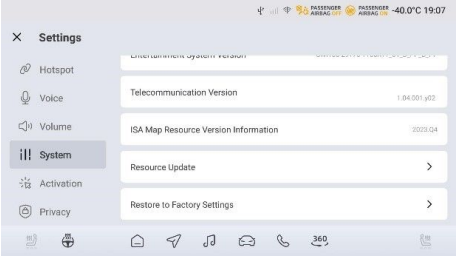

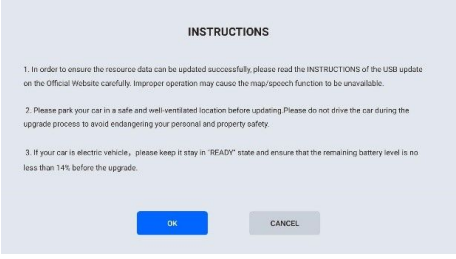

Navigation

Getting started

Navigation view

The navigation system helps you find your way to your destination with the built-in GPS receiver. MG NAVIGATION does not transmit your GPS position; others cannot track you. It is important to look at the display only when it is safe to do so. If you are the driver of the vehicle, we recommend that you plan and review your route before you start your journey. Plan the route before your departure and stop if you need to change the route. You must follow the traffic rules. If you deviate from the planned route, the navigation system changes the instructions accordingly.

Activation

When you start your navigation system for the first time, a few steps are necessary to set it up:

GPS signal is required to activate the navigation system. Please launch it in an area where the sky is clearly visible. You will receive a warning if a GPS signal is not available. In this case, please drive to an open location, and start the system again.

Please follow these steps to activate your navigation system :

1 Read and accept the end-user license agreement. This is necessary to use the product.

2 Read and accept a reminder that while using navigation, you must always follow actual traffic rules and pay full attention to driving.

Navigation view

The navigation view is the main screen of MG NAVIGATION that shows the planned route on a map. The navigation system works with digital maps which are not more than just the computerised versions of traditional paper maps. Similarly to paper road maps, the 2D mode of digital maps shows you streets and roads. Elevation is also illustrated in colour.

Tap the map anywhere if you want to browse your surroundings. Buttons allow you to change between a 3D/2D view, and to rotate or zoom the map. You can also swipe your fingers to move the map in any direction. The features available in this view are different when you are driving without a destination and when you are navigating on a planned route.

Driving without a destination

The navigation view displays the following screen buttons and information on the map when you do not have a planned route:

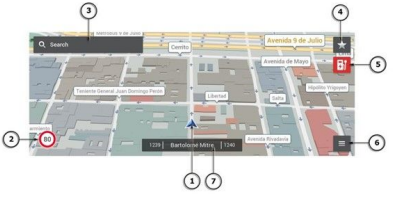

1 Current position marker

The current position is displayed as a blue arrow by default. When there is no GPS position, the current position marker is transparent and it shows your last known position.

2 Speed limit warning

It shows the current speed limit.

3 3. Search for addresses and places

Tap to set a destination for your route. See chapters on Selecting a destination below for detailed instructions.

4 Saved locations

Tap to navigate to a previously saved location. This includes your Home / Work address. Tap 'Home' or 'Work' to define their locations, then use the same buttons to find your way there quickly.

5 Charging stations

Tap to look for electric vehicle charging stations nearby. See section Finding a charging station for details.

6 Navigation menu

tap to open the Navigation menu, where you can reach other parts of the navigation system.

7 Street name

It shows the current street name. By tapping it, you can open the Where Am I screen with information on your current location.

Driving with a destination

The navigation view displays the following screen buttons, data fields, and route information on the map during navigation:

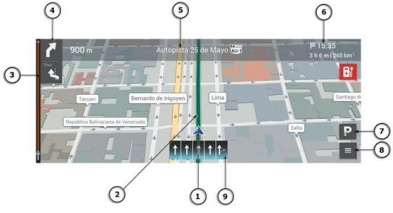

1 Current position marker

The current position is displayed as a blue arrow by default. When there is no GPS position, the current position marker is transparent and it shows your last known position.

2 Planned route

The planned route is displayed as a green line.

3 Next turn preview

It shows the type of the next manoeuvre and its distance.

4 Second next turn preview

It shows the type of the second next manoeuvre if it is near the first one.

5 Next street

It displays the name of the next street.

6 Data fields

Three data fields show the following information:

The remaining time of the trip.

The remaining distance to the destination.

You can change the default values by tapping the area where the data fields appear.

7 Parking around destination

This appears when you are close to the destination. By tapping it, you can check the available parking facilities around your destination.

8 Destination menu

This appears when you are close to the destination. By tapping it, you can check the trip summary, find Places around your final destination, save the current location.

9 Lane information

On multi-lane roads, it shows the lanes ahead and their directions. The highlighted arrows represent the lanes

and direction you need to take. Speed limit warning It shows the current speed limit.

10 Speed limit warning

Speed Limit WarningThis displays the current speed limit associated with the location.

11 Alert point warning

It shows the type of the alert points when approaching Alert Points like speed cameras, school zones or railroad crossings. You must make sure that using this feature is legal in the country where you intend to use it.

12 Warning road sign

This displays any warnings for the current road (for example, dangers, sharp curves).

13 Signpost

This displays the available destinations and the road numbers, similar to how they appear in real life.

14 Motorway services

By tapping it, you can check the details of the next few service stations (petrol stations, restaurants) when travelling on a motorway.

15 Navigation menu

By tapping it, you can open the Navigation menu, where you can reach other parts of the navigation system.

16 Street name

It shows the current street name. By tapping it, you can open the Where Am I screen for information on your current location.

17 3D objects

This will display hills, mountains, roads, landmarks, and buildings in 3D.

Intelligent Driver Assistance

Intelligent Driver Assistance Description 232
Cameras and Radars 234
Adaptive Cruise Control (ACC) 238
Intelligent Cruise Assist (ICA) 247
Intelligent Overspeed Alarm 252
Speed Limit Assist System 254
Lane Departure Assist 258
Forward Collision Assist 262
*Blind Spot Assist (BSD, LCA)** 266
*Rear Cross Traffic Assist (RCTA, RCTB)** 268
*Rear Collision Warning (RCW)** 270
*Door Opening Warning (DOW)** 271
Ultrasonic Sensor PDC System 273
*Parking Camera** 274
*360 Around View Monitor** 275
Driver Status Monitoring System 277
MG Pilot Customisation 279

Intelligent Driver Assistance Description

Intelligent Driver Assistance Disclaimer

In order to use the intelligent driver assistance functions, the user and the driver must pay special attention to, fully understand, and accept the following:

1 All currently available intelligent driver assistance functions still require the driver to actively monitor and take over the entire driving process. The vehicle is not fully automated. The safety and reliability of these functions requires extensive testing and research in order to meet required safety standards and reach a level of driving that far exceeds that of a human driver. The realization of automated driving is also dependent on legal regulations and administrative approvals (this will vary between countries). As these intelligent driver assistance functions evolve and improve, vehicles may be updated and upgraded in a very controlled manner (this will depend on your vehicle's software and hardware at that time).

2 Users and drivers should carefully read, study, understand and implement the contents of this Owner's Handbook, and the vehicle, and its related functions, should be serviced in accordance with the requirements therein (in particular, the descriptions of the function modules and restrictions on the use of the Intelligent Driver Assistance and the Intelligent Cockpit). Users and drivers shall always bear the responsibilities and obligations stipulated in the Road Traffic Safety Law and other laws and regulations, and must always maintain control over the steering wheel and the brakes. The user or the driver shall bear all the responsibilities and consequences of any personal or property damage caused by the user's or the driver's faults (e.g., failing to use the vehicle in accordance with the requirements of the Owner's Handbook, or failing to take over the steering wheel and/or the brakes at any time in accordance with the requirements of the Road Traffic Safety Law, etc.).

3 Intelligent driver assistance functions can only play an auxiliary role under certain conditions, and cannot replace the driver's observation of the road conditions. The driver should drive with caution and should not

rely on this function. The Owner's Handbook fulfills its obligation to clearly explain the various limitations on the use of each auxiliary function (i.e., under what circumstances certain functions may not be activated, inhibited, or may stop working).

4 Intelligent driving assistance functions have requirements in respect to the weather, road surface, driver operation and other objective conditions. They may fail, be inappropriate or not operate correctly under the influence of a number of factors that are not equivalent to the existence of design and application defects in the product. If any user or driver cannot understand or accept the content of the above terms, they should not use the relevant intelligent driver assistance function. If the function has been turned on, please exit the function immediately.

Camera and radar operation may be impaired in certain driving situations, weather and road conditions. In areas where there are complex traffic conditions such as intersections road junctions with congestion or poor general conditions, the driver MUST take full control of the vehicle.

The intelligent driver assistance systems, through cameras, are able to detect road and environmental information in front of the vehicle and, when certain conditions are met, provide warning messages or intervene in order to assist the driver in maneuvering the vehicle in a safer and more reliable manner.

Note: DO NOT operate any infotainment switches whilst driving. If you wish to make any settings changes, please pull over when it is safe and legal to do so.

Cameras and Radars

Driver Assistance Cameras

The vehicle is equipped with the following visual cameras: parking camera, surround view camera, front view camera module (subject to actual vehicle configuration).

The camera carries out target identification in the form of vision, and provides identification information for related functions after identifying the target in the surrounding area of the vehicle.

Camera Mounting Position

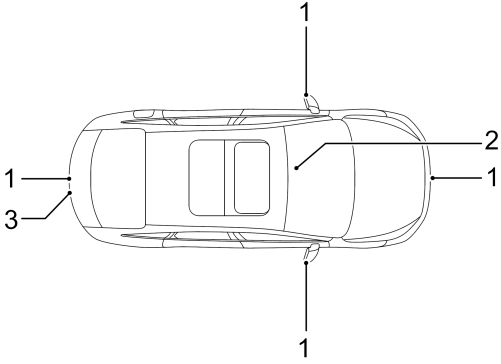

1 Surround view camera

2 Front view camera module

3 Parking camera

Note: The configuration of cameras are subject to the specification of the vehicle purchased.

Note: To ensure that the front view camera works correctly, always keep it clean and free of ice, snow, water, dust, etc.

Note: To ensure the camera works correctly, always keep the windshield in front of the camera clean with no objects blocking the view between the camera and the windshield.

Note: Please wipe the camera lenses with a soft cloth or wash with water (of low pressure) when foreign objects are found on the camera surface. Do not use a high pressure water jet to flush the camera and do not use abrasive or sharp objects to clean the camera.

Camera Calibration

Except for a local Authorised Repairer personnel, others are strictly prohibited from removing, refitting or replacing the front carema. The front view camera module must be re-calibrated in the event of the following conditions:

- The module is misaligned, e.g. the camera position has changed;
- Removal and refit of the camera or camera bracket;
- Removal and refit of the front windscreen;
- The four-wheel alignment parameters have changed.

Note: Please consult a local Authorised Repairer for more details about camera calibration.

Camera detection performance will be affected in the following cases:

- Camera defaced or covered by obvious foreign objects; covered by ice, snow, mud, dust.
- Poor visibility or bad weather (heavy rain, snow, fog, haze, smoke, dust, sandstorms, etc.).
- When light conditions are poor such as evening, night, unlit tunnels, etc.
- Dust and water spray created by road cleaning vehicles and sprinklers working in the adjacent lane; or water spray by vehicles ahead in very wet conditions. Unpaved roads, construction areas.
- Strong light (e.g., headlights of an oncoming vehicle, headlights of a vehicle behind, or direct sunlight) obstructs the camera's view.
- Strong light, slanting sunlight, and other excessive light conditions (backlighting is more common at high altitudes).
- Flickering street lights when travelling long streets at night; rapid changes in light and darkness (e.g., tunnel entrances and exits), etc.

- Travelling on a highly reflective road, for example, after the rain, in snow or other high-reflection conditions.
- Hot or cold weather temperatures interfere with or affect sensor performance to some extent.
- The camera's field of view is partially or completely blocked by such things as stains, gum, oil, stickers, etc. on the front windscreen; foreign objects such as decorative strips, stickers, etc. block the detection field of view; the outside of the front windscreen is not clean or cleared of ice before the journey.
- The windscreen in the camera view is broken, has cracks or other optical-affected changes;
- The wiper speed is not fast enough or the wiper blade is worn, aged or distorted, resulting in the inability to wipe clean the front camera field of view, this could cause water stains and scrape marks in the sensor field of view.
- The front windscreen demist/defrost is not suitably effective in wet and humid conditions.
- The camera, or it's fixing, is not completely secure, this will allow vibration.
- The camera has not been calibrated after removal and refitting.

Driver Assistance Radars

The vehicle is equipped with the following radars: ultrasonic radar and millimeter-wave radar (subject to actual vehicle configuration).

Radars are only used to provide identification information for relevant functions after detecting targets within the vehicle perimeter.

Radar Mounting Position

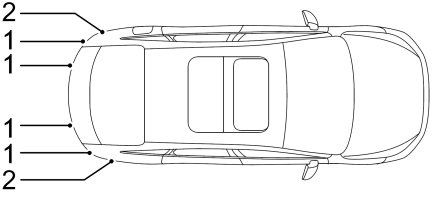

1 Ultrasonic radar

2 Millimeter-wave radar

Note: The configuration of the radars is subject to the vehicle purchased.

Note: To ensure that the radars work correctly, always keep them clean and free of ice, snow, water, dust, etc.

Note: Please wipe the radar or cover with a soft cloth or wash with water (of low pressure) when foreign objects are found on the radar surface. Do not use a high pressure water jet to flush the radar and do not use abrasive or sharp objects to clean the radar.

Millimeter-wave Radar Calibration

Except for a local Authorised Repairer personnel, others are strictly prohibited from removing, refitting or replacing these radars. The millimeter-wave radar must be re-calibrated in the event of the following conditions:

- The millimeter-wave radar is maladjusted, e.g. the millimeter-wave radar position has changed;
- Removal and refit of the millimeter-wave radar or radar bracket;
- Removal and refit of the front and rear bumper assemblies/anti-collision beams;
- The four-wheel alignment parameters have changed.

Note: When the millimeter wave radar is subjected to strong vibrations or minor impacts, the mounting position needs to be checked and re-calibrated if necessary.

For calibration of a millimeter wave radar, please consult a local Authorised Repairer.

The radar detection performance will be affected in the following cases:

- The radar or bumper is covered with foreign objects such as snow, ice, mud, sewage, tape, trim, etc.
- The bumper is painted with unauthorised paints and spraying processes.
- The radar or bumper is damaged or the mounting position is changed.
- Electromagnetic interference from other equipment.
- Tight and closed environments such as ferries, three-dimensional garages, etc.
- The vehicle is being towed.
- The radar may not work correctly due to limited detection performance in an open field (such as an open parking lot) or on an open road.

Note: Any snow on the radar should be removed with a brush, while any ice is preferably removed with a deicing spray.

Adaptive Cruise Control (ACC)

The adaptive cruise control system is designed as a comfort system. It provides assistance to the driver, but DOES NOT replace any of the driver's responsibilities. When using the adaptive cruise control system, it is important that the driver maintains concentration at ALL times and is prepared to take action. Otherwise, accidents or personal injuries may occur.

Depending on whether there is a vehicle ahead, the adaptive cruise control can conduct automatic switching between constant speed cruise and car-following cruise. With the adaptive cruise control, the vehicle is allowed to conduct constant speed cruise within a certain speed range, or conduct car-following cruise by setting the distance between the vehicle and vehicles ahead. If a vehicle is detected in your path of travel, the ACC may apply moderate braking or acceleration to maintain the selected following distance.

Note: The adaptive cruise control system is designed for motorways and roads in good condition. It is not recommended for use on urban roads and mountain roads.

Adaptive Cruise Activation

After following the vehicle ahead to a stop, the driver must ensure that there are no obstacles or other traffic participants, such as pedestrians, directly in front of the vehicle before starting off to follow the vehicle ahead again.

Whilst using the car following cruise function, it is strongly recommended that the driver does not touch the accelerator pedal. Any activation of the accelerator will not allow the adaptive cruise control system to automatically apply the brakes, and the vehicle is only controlled by the driver's manipulation of the accelerator pedal.

DO NOT exit the vehicle when the adaptive cruise control system is holding the car stationary. Before leaving the vehicle, always shift into P gear and ensure that the vehicle has been powered off.

If the adaptive cruise control system is holding the car stationary, the driver still needs to pay full attention and be ready to apply the brakes manually. Please note that the vehicle will no longer remain stationary and may move forward or slip on a slope if the function is deactivated, turned off or canceled at any time.

When driving on a bend, the adaptive cruise control may actively reduce the vehicle speed to maintain vehicle stability and safety.

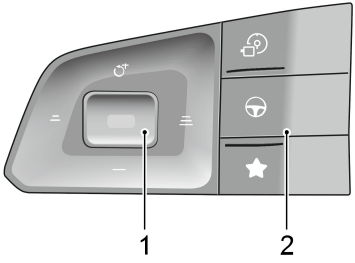

1 Knob

2 Pilot Switch

The system has no ACC soft switch. Short press the Pilot switch on the left side of the steering wheel, and the ACC function will be turned on and in an inactive state. Press the Pilot switch again to disable the function.

Long press the Pilot switch to switch between ACC and ICA modes.

Short press the Pilot switch (2), the ACC indicator will be displayed in the instrument pack, at this time, the ACC

system will be ON but in an inactive state. Press the "Knob" (1) again, the ACC system can be activated, and the ACC indicator in the instrument pack turns blue. When activated for the first time, its target speed is the actual speed at activation [If your vehicle speed is less than 30 km/h (20 mph), the target speed of the system is set at 30 km/h (20 mph)]. If the speed of the vehicle ahead is greater than the cruise target speed of your vehicle, your vehicle will maintain the target speed to conduct constant speed cruise; if the speed of the vehicle ahead is lower than the cruise target speed of your vehicle, it will enter the car-following cruise, and the rear end schematics of the vehicle ahead is displayed on the instrument pack. In car-following cruise, you can follow the vehicle ahead to a stop. If the stop time is less than a certain time, your vehicle may automatically start off to follow the vehicle ahead, otherwise the driver needs to re-activate the ACC system according to the instrument pack prompt.

Note: Manual deactivation of either the Stability Control System (SCS) or Traction Control System (TCS) will inhibit the operation of the adaptive cruise control system

Adaptive Cruise Target Following Distance Adjustment

When the adaptive cruise control system is activated, press the adjustment knob (1) to the right to increase distance, or to the left to decrease the distance. The following distance can be switched between 3 distance settings, these are displayed on the instrument pack display.

Select an appropriate following distance according to the relative speed considering the vehicle ahead, the higher the relative speed, the greater the following distance should be set. Considering the traffic and weather conditions, the optional following distance range may not be suitable for all drivers and driving conditions.

Adaptive Cruise Target Speed Adjustment

When the ACC system is active:

- Use the accelerator pedal to reach the desired speed, and press the knob (1) and release the accelerator pedal. The vehicle will cruise at the desired speed.
- Move the knob upward and hold, the target speed will increase until the desired set speed appears on the instrument pack, then release the knob. When it is

confirmed that there is no vehicle ahead or the vehicle ahead is beyond the pre-selected following distance, the vehicle speed can be increased to the set speed.

- Move the adjustment knob downward and hold, the target speed will decrease until the desired set speed appears on the instrument pack, then release the knob, and the speed will be decreased to the set speed.

Note: If the vehicle ahead continuously makes hard acceleration or deceleration actions, the ACC system may not be able to maintain the following distance accurately, the driver must pay attention and perform operations such as braking or lane change in time according to the surrounding environment.

Adaptive Cruise Control Exit Activation

When the ACC system is active, short press the Pilot switch to de-activate the ACC system.

Automatic Deactivation of Adaptive Cruise Control

In the following situations, the ACC may be automatically deactivated, this will require the driver to manipulate the vehicle on his/her own:

- Short press the Pilot switch.
- Depress the brake pedal when the vehicle is not stationary.
- Move the gear shift to any gear other than Drive gear.
- The driver unfastens the seat belt.
- Depress the accelerator pedal for longer than the preset time.
- Open any door or the bonnet/tailgate.
- Operate the EPB switch.
- Follow the vehicle ahead to a stop and the stop time exceeds a certain time.
- The camera or radar is blocked, or surroundings trigger the safe exit mechanism of a sensor, or the system fails.

Note: If following the vehicle ahead to a stop with the adaptive cruise control system enabled, if any of the following conditions occur whilst the vehicle is in a stopped state, the EPB will automatically be applied:

- ***The driver unfastens the seat belt;***
- ***The driver door is opened;***
- ***The stationary time exceeds the preset time period.***

Adaptive Cruise Control Reactivation

After ACC is de-activated and the ACC indicator on the instrument pack is white, the ACC function can be

re-activated by toggling the knob(1) upward, the target speed will revert back to the target speed prior to deactivation. The ACC can also be reactivated by pressing the "Knob(1)".

Adaptive Cruise Override

If the driver applies the accelerator pedal when the ACC system is activated, the speed will be controlled by the accelerator pedal and may be above or below the preset target cruise speed. When the accelerator pedal is released, the ACC will resume to the preset target cruise speed.

Clearing Target Speed Memory

Turning the ACC off will clear the ACC's set speed in the memory, a vehicle power-off will also clear the stored set speed.

Explanation of Function Limitation

ACC operation may be impaired or limited during the following conditions (but not limited to), even if it is activated :

- Encounters a vehicle or object which is stationary or traverses the lanes;
- Encounters pedestrians, non-motor vehicles or animals;
- Encounters two-wheeled objects such as handcarts, suitcases, etc.;
- Encounters vehicles that are obscured by pedestrians, objects, etc.;
- Encounters vehicles with open boots or doors;
- Encounters vehicles with strongly reflective rear ends;
- Encounters abandoned vehicles;
- Encounters vehicles ahead that are beyond the lane;
- There is oncoming traffic or the vehicle ahead applies emergency braking;
- The vehicle ahead reverses;
- A vehicle suddenly cuts into the lane in front;
- Encounters a vehicle driving at a low speed;

- Encounters a vehicle with loaded items protruding from the body contour;
- Encounters towed vehicles;
- Special vehicles (such as tall container trucks, vehicles with strongly reflective rear ends, trailers, sprinklers, etc.);
- Approach the vehicle ahead so fast that the system cannot apply sufficient brakes;
- The vehicle is driving on an uneven road or a complex traffic road section;
- The vehicle makes a sharp turn;
- The vehicle is entering/exiting a tunnel or driving in the tunnel;
- The vehicle is driving under the mottled tree shadow;
- This vehicle is overloaded in the cargo area causing the front of the vehicle to tilt up.

Special Driving Environments

The ACC system has its limitations. The following are some situations where safe operation limitations may be exceeded. The driver should maintain control of the vehicle and must remain alert at all times while paying special attention to traffic conditions and surroundings, select an appropriate speed and be prepared to take any necessary measures.

1 When turning at an intersection or driving into or out of a curve following the vehicle ahead, the ACC system may be unable to detect the vehicle ahead in the same lane, or may respond to the vehicles in another lane.

Note: DO NOT use the adaptive cruise control system on entrance/exit ramps or sharp curves.

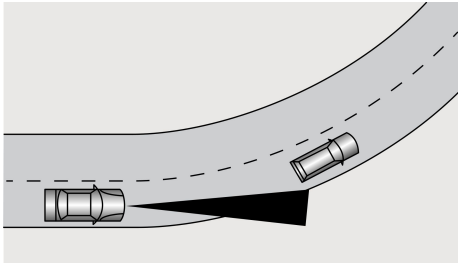

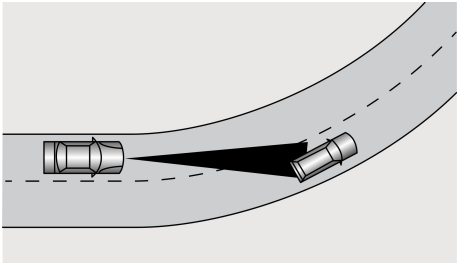

2 If the vehicle ahead changes the lane, but does not drive into the new lane completely, the ACC system may be unable to detect the vehicle.

If the vehicle ahead changes lanes, but does not exit the current lane completely, the ACC system may determine that the vehicle ahead has already left and accelerates.

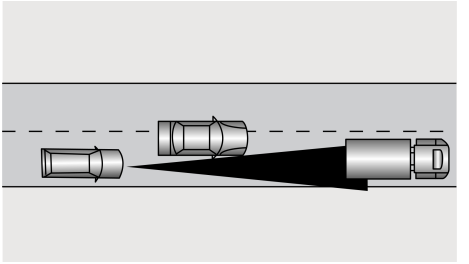

3 Do not use the ACC system when driving on uneven roads, which may include steep slopes or downhill conditions.

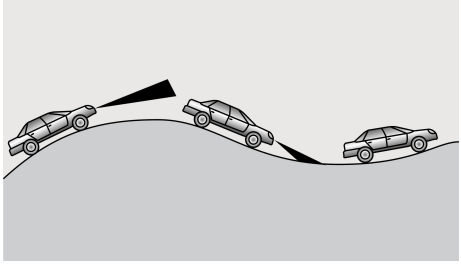

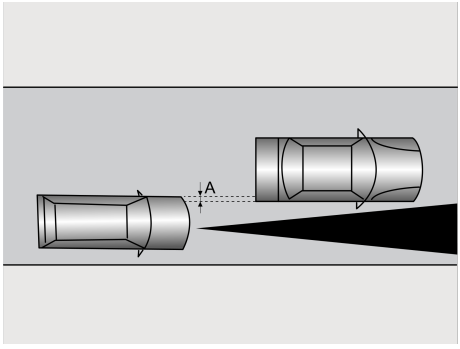

4 When driving behind a vehicle (A) that only partially overlaps with your vehicle, the ACC system may be unable to detect the vehicle.

Note: Please DO NOT use the adaptive cruise control system in the following situations:

- ***Driving in bad weather conditions;***
- ***When the ambient light is insufficient, the light is too bright or the forward lighting of the vehicle is poor;***
- ***Driving on rough or poor road surfaces;***
- ***Driving through roadworks or construction sites;***
- ***Driving on low friction roads (the rapid change of the tyre traction may result in the excessive wheel slip).***

Intelligent Cruise Assist (ICA)

Intelligent cruise assist system is an auxiliary function that assists the driver, but does not replace the driver. Due to the limitations of system detection and control when using the intelligent cruise assist system, the driver must always hold the steering wheel, be aware of the surroundings, and correct or take over the steering wheel control when necessary; otherwise accidents or personal injuries may be caused.

The system has no ICA soft switch. Short press the Pilot switch on the left side of the steering wheel, and the ICA function will be turned on and in an inactive state. Press the Pilot switch again to disable the function.

Long press the Pilot switch, and the system will switch between ACC and ICA modes.

When the following conditions are met:

- The ICA system is ON;
- The system detects the lane lines on both sides of the vehicle;
- The vehicle is in Drive gear.

Press the "Knob"(1) on the left side of the steering wheel to activate the ICA system. The ICA system works on the basis of adaptive cruise control system. If the lane lines ahead on both sides are clear, the system will assist the vehicle in driving within the lane lines; at low speeds, if there are other vehicles ahead and the lane lines are not clear, the system can assist the vehicle in following the track of the vehicle ahead.

Note: When ACC is active and the above conditions are met, the ICA system can be activated without pressing the "Knob"(1) .

When the system detects that the driver has not been controlling the steering wheel for a certain period of time, it will give warnings to prompt the driver.

Note: The driver should adjust the vehicle speed and the following distance according to road visibility, weather, and road traffic conditions. The intelligent cruise assist (ICA) system does not respond to pedestrians, animals, stationary vehicles and vehicles that drive across the lane or oncoming vehicles in the same lane. If the system cannot reduce the vehicle speed sufficiently, the driver must apply the brakes using the brake pedal. If another vehicle cuts into the current lane under congested conditions, the system may not brake sufficiently due to the fact that the vehicle cutting in does not enter its detection range, the driver must actively apply the brakes.

The ICA system will be limited or does not work in the following conditions:

- The driver operates the indicator switch;
- The driver operates the hazard warning lights;
- The driver presses the accelerator pedal rapidly, makes emergency steering manouevre or presses the brake pedal hard;
- The system recognizes that the driver has not been manipulating the steering wheel for a period of time;
- When the system implements the control, the driver is manipulating the steering wheel;
- The lane line is too thin, damaged or not clear;
- The vehicle is driving on a bend with a small curvature radius or on a road that is too narrow or wide;
- The vehicle has just entered the road section with lanes or passes through the road section without lane lines;
- The vehicle is in Reverse gear;
- The vehicle makes rapid lane change or lateral sway;
- When following the track of the vehicle ahead, the turning radius of the vehicle ahead is too small;
- The anti-lock brake system (ABS) and the dynamic stability control system (SCS) are activated;
- The anti-lock brake system (ABS), dynamic stability control system (SCS), electric power steering system (EPS), etc. fail.
- Rain, snow, fog and other low visibility weather;
- When light intensity is low at night;
- Direct sunlight, backlit environment;
- Dusty/crosswind conditions;
- Excessive road curvature with sharp turns;
- Excessive wide or narrow roadway width;
- Road conditions where lane lines are excessively worn or obscured and where old and new markings overlap;

- Road construction sections;
- Road sections where objects cast large shadows on the lane;
- Road sections without lane lines, such as non-standardized roads and construction areas;
- Special lane lines, such as deceleration cue lines, guide lines, etc.;
- The presence of edges or other high-contrast lines on the road surface other than lane lines, such as pavement seams, curbs, pavement traces, unerased old lines on the road surface, etc.;
- The presence of text or traffic signs on the roadway surface;
- Complex terrain at roadway junctions;
- Special lane changes such as lane merges, reroutes, and diversions;
- Special roads, such as tunnels;
- Poor road conditions such as bumpy, slippery, cracked or icy road surfaces;
- Uphill and downhill roadway scenarios;
- Stationary or slow-moving vehicles and lateral vehicles ahead;
- Special vehicles, such as damaged vehicles, irregularly shaped vehicles;
- Animals, walls and other unidentified obstacles;
- Crossing pedestrians, vehicles, bicycles, motorcycles, tricycles, and oncoming traffic in the opposite direction;
- Static obstacles, such as encountering with road construction facilities in the road (traffic cones, traffic barrels, traffic bollards, warning triangles, or other roadblocks);
- Vehicles that cut in front in close proximity;
- Vehicles that pull out at speed;
- Guardrails, crash piers, etc. at ramps or forks in the road;
- Obscured front windscreen (by water spray, dust or sticker, etc.);
- Camera obscured, camera unable to focus, camera unable to calibrate, and camera failure due to weather damage to the camera's field of view such as low sun altitude, glare, roadway water spray, icy windscreen, rain, snow, fog, etc., or system malfunction. The radar is blocked or malfunctions, or the system malfunctions.

- The detection performance of the radar may be limited and not work properly in open fields and on open roads.

It is recommended to turn off the ICA system in the following conditions:

- When driving in a sport style;
- When driving in bad weather;
- When driving on poor road surfaces or sections;
- When driving through a road construction site;
- When driving the vehicle on a steep, meandering; or slippery road (such as roads covered in ice or snow, wet roads, or roads with large puddles);
- When driving off-road or on an unpaved road.

IMPORTANT
• In cases where the number of lanes increase or lanes merge the driver MUST take full control of the vehicle. • In areas where there are complex traffic conditions such as intersections or road junctions with congestion, the driver MUST take full control. • The driver MUST be aware of the surroundings and be able to assume full control of the vehicle when using the traffic jam assist system to track the car in front should the need arise.

Adaptive Biasing

With the intelligent cruise assist (ICA) is activated, if the driver swerves to avoid the curbs or vehicles, or tends to drive to one side of the lane, the driver can maintain control of the vehicle with the deviation from the centre of the lane and keep driving for a period of time, the system will cruise according to the vehicle's deviation in the lane;

The ICA may resume 'centered driving' in the following cases:

- Driving on a bend;
- Absence of lane lines;
- Approaching large-scale vehicles ahead on the opposite side;
- A continuous situation where the drivers hands are not on the steering wheel, triggering L2 hands-off alarm;
- The driver make a rapid steering action.

Intelligent Overspeed Alarm

The intelligent speed assist system is an auxiliary function. It may display an incorrect speed limit value or no speed limit value in the instrument pack due to various factors. As a result, the vehicle speed is not restricted within the correct range. The driver still needs to observe the speed limit of the road traffic and speeding is strictly prohibited.

The front view camera cannot recognise speed limit signs painted on the road surface. The driver MUST observe these speed limits and adjust the their speed accordingly.

The setting interface of the intelligent overspeed alarm is located on the entertainment display, and the driver can turn the system On/Off through the soft switch on the entertainment display. The vehicle detects the speed limit sign (e.g. ⑥⓪) on the roadside through the front view camera. When the vehicle speed is greater than the speed limit value in the speed limit sign speed indicator, the speed indicator flashes and an audible alarm sounds to prompt the driver to control the vehicle speed.

When the intelligent overspeed alarm is activated, the speed limit sign speed indicator illuminates. When the vehicle passes the first recognised speed limit sign, the speed limit sign speed indicator shows the real-time speed limit value. If the vehicle encounters a speed limit sign with the same speed limit value, the speed limit value in the speed limit sign speed indicator is not updated.

Note: When this vehicle changes lanes, makes a turn at an intersection, makes a U-turn, or recognizes that the speed limit has been lifted, the original speed limit value on the instrument pack may be reset to zero and "—" will be displayed until a new speed limit sign is encountered. If the conditions are not met, the original speed limit value will maintain and not be reset. The driver must pay attention and make the correct judgment.

The intelligent overspeed alarm may not work properly in the following cases:

1 The detection performance of front view camera is affected;

2 The speed limit signs are blocked by the trees at the roadside, ice/frost, snows, dusts, etc.; or the speed limit signs are placed improperly or damaged;

3 When there are multiple speed limit signs over the road or at the roadside, the overspeed alarm will be issued according to the highest speed limit value.

4 Speed traffic signs are substandard or damaged or deformed.

5 Speed decals are identified on slow moving vehicles such as trucks.

IMPORTANT

- The camera may not correctly recognise speed limit signs during poor lighting conditions, bad weather, non-standardized or sheltered speed limit signs or the camera's own restrictions which include the recognition of similar signs (e.g., recognise a weight limit sign as a speed limit sign or recognise a minimum speed sign as the maximum speed sign).
- The camera cannot identify the text provided below the speed limit sign, such as Auxiliary Lane, 100 m Ahead, School Section, 7:00-10:00 , etc. The camera will identify the speed limit sign with text as a normal speed limit sign.
- Some drastic and rapid steering operations made by the driver may be judged as changing lane or turning around in the intersection by the system, resulting in the identified speed limit signs being cleared.
- In cases where a speed limit sign contains multiple speed limits. The camera may not identify all the speed limits.

Speed Limit Assist System

The speed limit assistance system is only an auxiliary function. In cases where the speed limit sign is not standardized or the front view camera is blocked, the wrong speed limit value or no speed limit value may be displayed on the instrument pack and the vehicle is not restricted in the correct speed range, the driver will remain responsible for real-time evaluation of the speed limit on the road.

The front view camera cannot recognise speed limit signs painted on the road surface. The driver MUST observe these speed limits and adjust the their speed accordingly.

The setting button of the speed limit assist system is the SPEED LIMIT switch (2 below) located on the left of the steering wheel. The driver can select the mode by long-pressing the SPEED LIMIT switch: Intelligent or Manual, and enable the speed limit assist system through the SET button (1 below).

1 Intelligent: i.e. Intelligent Speed Limit; The vehicle detects roadside speed limit signs (e.g. 60) through the front view camera, and actively intervenes in the speed control to keep the vehicle speed within the permitted maximum speed limit.

2 Manual: i.e. Manual Speed Limit; The driver sets the maximum speed via the button on the left side of the steering wheel, and actively intervenes in the speed control to keep the vehicle speed within the permitted maximum speed limit. Refer to "Manual Speed Limit Vehicle Speed Setting".

Note: If mode selection is disabled, please confirm that the intelligent driving is turned off on the infotainment display and try agian.

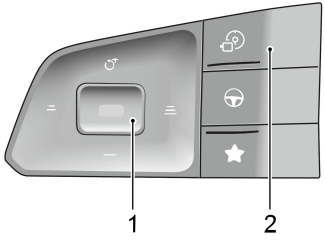

Manual Speed Limit Vehicle Speed Setting

After the manual speed limit is enabled, the target speed limit can be set via the button on the left side of the steering wheel, as follows:

1

When the manual speed limit is enabled, the manual speed limit function enters the standby state, and the speed limit assist system indicator on the instrument pack illuminates in white; press the SET button (1 above) to activate the manual speed limit function, and the speed limit assist system indicator illuminates in blue. When the SET button is pressed for the first time, if the actual speed is lower than 20 mph (30 km/h), the target speed limit displayed on the speed limit assist system indicator will be 20 mph (30 km/h). If the actual speed is higher than 20 mph (30 km/h), the current speed will be rounded up to the nearest multiple of 5 as the target speed limit value. The target speed limit value for the manual speed limit can then be adjusted through the speed adjustment button (1 above). The target speed limit value is increased or decreased by 5 mph/km/h every time the button is pressed upwards or downwards. The speed limit value will change continuously by 5 mph/km/h when the button is pressed upwards/downwards and held.

2 When the manual speed limit is activated, the system will actively limit the vehicle from exceeding the target speed limit. When the actual vehicle speed exceeds the target speed limit set by the driver, the system will gradually reduce the vehicle speed to below the target speed limit.

3 When the manual speed limit is activated, the driver can press the SPEED LIMIT switch (2 above) to let the

system return to standby state. Press the SET button (1 above) to restore the manual speed limit function. If you want to disable the manual speed limit function, press the SPEED LIMIT switch again.

Intelligent Speed Limit Setting

When the intelligent speed limit is enabled, the intelligent speed limit function enters the standby state, and the speed limit assist system indicator on the instrument pack illuminates in white; press the SET button (1 above) to activate the intelligent speed limit function, and the speed limit assist system indicator illuminates in blue. When the vehicle passes the first recognised speed limit sign, the speed limit sign speed indicator shows the real-time speed limit value. If the vehicle encounters a speed limit sign with the same speed limit value, the speed limit value in the speed limit sign speed indicator is not updated.

Note: After the car identifies a speed limit sign, if no new signs (same or different) are identified beyond a certain mileage, the original speed limit value on the instrument pack will be reset and displayed as "–" . The driver MUST observe these speed limits and adjust the their speed accordingly.

Note: When the vehicle needs to change lane, make a turn or turn around at an intersection and the driver uses an indicator in advance and slows down, the original speed limit value on the instrument pack will be reset until a new speed limit sign is detected. If the conditions are not met, the original speed limit value will be maintained an not be reset. The driver MUST observe the speed limits and adjust their speed accordingly.

The driver can temporarily exit the speed limit assist system by doing the following:

1 Temporarily exceed the speed limit by depressing the accelerator pedal deeply;

2 Press the SPEED LIMIT switch (2 above) to temporarily exit the speed limit assist system function, at which time the speed limit assist system indicator on the instrument pack turns white. Press the SET button (2 above) to resume the intelligent speed limit function. If you want to disable the intelligent speed limit function, press the SPEED LIMIT switch again.

The intelligent speed limit may not work properly in the following cases:

1 The detection performance of front view camera is affected;

2 The vehicle is driven at a high speed;

3 The speed limit signs are blocked by the trees at the roadside, ice/frost, snows, dusts, etc.; or the speed limit signs are placed improperly or damaged;

4 There are several speed limit signs set up over the road or at the roadside; Currently, the front view camera can only identify the speed limit signs for the lane the car drives on;

5 The speed limit signs set up at the forks in the road, the curves and the on-ramp/off-ramp;

6 Lane change, etc.

IMPORTANT

- The camera may not correctly recognise speed limit signs during poor lighting conditions, bad weather, non-standardized or sheltered speed limit signs or the camera's own restrictions which include the recognition of similar signs (e.g., recognise a weight limit sign as a speed limit sign or recognise a minimum speed sign as the maximum speed sign).
- The camera cannot identify the text provided below the speed limit sign, such as Auxiliary Lane, 100 m Ahead, School Section, 7:00-10:00 , etc. The camera will identify the speed limit sign with text as a normal speed limit sign.
- Some drastic and rapid steering operations made by the driver may be judged as changing lane or turning around in the intersection by the system, resulting in the identified speed limit signs being cleared.
- In cases where a speed limit sign contains multiple speed limits. The camera may not identify all the speed limits.

Lane Departure Assist

Lane departure assist system is an auxiliary system that assists the driver, therefore, the operator must remain aware of their surroundings at all times. When using the lane departure assist system, the driver MUST always pay full attention, hold the steering wheel, and be prepared to correct the steering wheel or take over the vehicle at all times, otherwise accidents or personal injuries may be caused.

The lane departure assist system cannot always recognise the lane lines or kerbs, and sometimes may incorrectly recognise poor road surfaces, certain road structures or objects as lane lines or kerbs. When such situations occur, the lane departure assist system must be turned off immediately.

The lane departure assist system switch is located on the entertainment display. The system can be turned on/off in the appropriate Driver Assistance interface, and the mode can be selected.

Alert

The system detects the lane lines ahead when the following detection conditions are met:

- The function is in ON state;
- The vehicle speed is above 60 km/h(37 mph);
- The lane lines are clear, and the system detects at least one lane line;

When the wheel is about to cross the lane line, the system will give warnings to remind the driver to correct the direction in time and keep the vehicle running within the lane lines. The function will exit when the speed is lower than 55 km/h(34 mph).

Assist

The system detects the lane lines ahead when the following detection conditions are met:

- The function is in ON state;
- The vehicle speed is above 60 km/h(37 mph);
- The lane lines are clear, and the system detects at least one lane line;

When the wheel is about to cross the lane line or has already crossed the lane line, the system will assist the

driver in keeping the vehicle running within the lane lines by applying corrective steering intervention and sounding alerts. If the vehicle deviates too much from the lane line, the warning function will be triggered at the same time. The function will exit when the speed is lower than 55 km/h(34 mph).

When the system applies intervention many times in a certain period of time, and monitors that the driver has been keeping his/her hands off the steering wheel, the system will give alarms.

Emergency Lane Keeping

The system detects the lane lines ahead, kerbs or vehicle in the adjacent lanes when the following detection conditions are met:

- The function is in ON state;
- The vehicle speed is above 60 km/h(37 mph);
- The lane lines or kerbs are clear, and the system detects at least one lane line or kerb; or a vehicle approaches in an adjacent lane;

When the wheels are about to run on the solid line or drive onto the kerb, have already run on the solid line or driven onto the kerb, or the vehicle has a lane departure and has a risk of collision with an oncoming vehicle or a vehicle approaching from behind on the adjacent lane, the system will assist the driver in keeping the vehicle running within the lane lines or performing emergency avoidance by applying corrective steering interventions and provide audible alerts. If the vehicle deviates too much, the lane departure warning function will be triggered at the same time. The function will exit when the speed is lower than 55 km/h(34 mph).

When the system applies intervention many times in a certain period of time, and monitors that the driver has been keeping his/her hands off the steering wheel, the system will give alarms.

IMPORTANT
• In the case of increased lanes, lane merges, etc., the driver is required to take active control. • In the case of complex traffic conditions (such as intersections, road sections with traffic congestion, etc.), the driver is required to take active control.

The lane departure assist system function will be limited or not work in the following conditions:

- The driver indicates in the direction of the laneline about to be crossed;
- The hazard lamps are activated;
- The driver applies the accelerator rapidly, carries out an emergency manoeuvre or makes a hard brake pedal application;
- The system detects that the driver has not moved the steering wheel for a preset time period (in the mode oflane departure assist and emergency lane keeping);
- During system intervention the steering wheel isoperated (in the mode of lane departure assist andemergency lane keeping)
- The lane line is too thin, damaged, or unclear;
- Changes in lane divisions occur, such as when lanes diverge or merge and when travelling at forks;
- Irregular or damaged kerbs;
- The vehicle is driven on the bend with a small curvatureradius, the road is too narrow or too wide;
- The vehicle has just entered a road section with lane lines or is driven on a road section without lane lines;
- The vehicle changes lanes or sways laterally too fast.;
- The vehicle is not in D;
- The vehicle speed is below 55 km/h(34 mph), or too high;
- The anti-lock brake system (ABS) and the dynamic stability control system (SCS) are activated;
- Faults exist in the anti-lock brake system (ABS),dynamic stability control system (SCS), electric power steeringsystem(EPS), etc.

It is recommended to turn off the lane departure assist system in the following situations:

- When driving in a sport style;
- When driving in bad weather;
- When driving on poor road surfaces or sections;
- When driving through a road construction site;
- Camera obscured or unclear (smudged, frosted), camera unable to focus, camera unable to calibrate;
- Camera failure due to weather damage to the camera's field of view caused by low sun altitude, glare, road

spray, windscreen icing, rain, snow, fog, etc., or system malfunction;

- In trailer mode;
- Scenes at night and with poor auxiliary lighting;
- Entering and exiting the tunnel (too rapid change in light intensity).

Forward Collision Assist

The driver remains responsible for the safety of the entire journey, even if the vehicle is equipped with a forward collision system. The driver MUST pay full attention and drive carefully. As with all the driver assist systems, the forward collision system cannot prevent accidents or avoid collisions in all situations. The driver MUST always remain in control to avoid accidents or emergency situations.

Ensure the forward collision system or ignition/vehicle power system is switched off when being towed. If forward collision system is enabled when the vehicle is being towed, adverse effects may affect the safety of your vehicle, the towing vehicle and the people around.

To avoid the occurrence of accidents, never test the functions of the forward collision system.

The forward collision assist system switch is located on the entertainment display. The system can be switched on or off in the appropriate Driver Assistance interface, and the mode can be selected.

Alert

When the vehicle is driving within a certain speed range, and the system detects a risk of collision between this vehicle and the vehicle ahead in this lane or pedestrians, it will give warnings to prompt the driver to slow down and keep a relatively safe distance from the vehicle ahead or pedestrians and a relatively safe speed.

The system may sound an alarm when:

- Approaching a stationary or moving vehicle at a speed greater than approx 7km/h(5 mph) and less than approx 150km/h(93 mph) .
- Approaching a pedestrian or a two-wheeled vehicle at a speed greater than approx 7km/h(5 mph) and less than about 85km/h(52 mph) .

Braking

When the vehicle is driving within a certain speed range, and the system detects a risk of collision between this vehicle and the vehicle ahead in the current lane or moving pedestrians, it will give warnings and automatically slows the vehicle down to avoid a collision or to mitigate collision damage. If the vehicle is braked to stop, it will be kept stationary within a short time, then the control of the vehicle will be handed over to the driver.

The system may intervene to automatically slow down the vehicle when:

- Approaching a stationary or moving vehicle at a speed greater than approx 4km/h(2.5 mph) and less than approx 150km/h(93 mph) .
- Approaching a pedestrian or a two-wheeled vehicle at a speed greater than approx 4km/h(2.5 mph) and less than approx 85km/h(52 mph) .

The system will automatically slow down the vehicle only when the following preconditions are met:

- The dynamic stability control system (SCS) and traction control system (TCS) are ON and failure-free;
- The power system operates normally without faults;
- The camera or radar system operates normally without faults;
- The vehicle is in Drive or Neutral gear;
- The airbags are not deployed.
- Seat belts are fastened and the doors are not open.

Note: In some cases, the driver may not predict and does not want to apply the brake, but if the forward collision assist system is applying a strong brake force, the driver can temporarily cancel the system by firmly depressing the accelerator pedal or turn the steering wheel if it is safe to do so.

The forward collision assist system will be limited or not work, or issues useless and

ineffective warnings or interventions in the following situations:

- Driving in bad weather, such as heavy fog, heavy rain, heavy snow, dust, sand storm, etc. which cause visibility reduction;
- Affected by the light, such as: at night and under poor auxiliary lighting, backlighting in the view, direct light from the oncoming vehicles, fast bright to dark light changes (tunnel entrance/exit), driving on the strong reflective road surface (road surface with water or snows in rainy or snowy days), in the tunnels, buildings, etc.;
- In situations with insufficient light, such as: in the evening, at night, in the tunnel, building, underground parking, etc.;
- There is oncoming traffic, the oncoming vehicle crosses into your lane or swerves;
- The vehicle ahead does not follow the rules of driving (for example, driving across lanes) and parking (for example, parking on the roads transversely);
- The vehicle ahead is not in the same lane as this vehicle or is partially blocked;
- The vehicle ahead is a non-standard motor vehicle (for example, a refitted vehicle);
- The vehicle ahead is a vehicle with high chassis;
- The vehicle ahead is a large vehicle and at a close distance (such as a tractor, a trailer, a towing vehicle, a mud-carrying vehicle and a sanitation truck);
- The vehicle ahead is some means of transportation rarely seen on the road (such as the ox cart, carriage or others);
- The vehicle ahead is a bicycle, motorbike or small wheeled object (such as suitcases, shopping carts or wheelchairs);
- The contour of the vehicle ahead is unclear due to the water sprayed by the wheels of the surrounding vehicles;
- The vehicle ahead does not turn on the tail lamps when driving at night or in the tunnel;
- The tail lamps of the vehicle ahead are all LED lamps or other home-made fairy lights;
- When travelling at night, street lamps flash erratically;
- The pedestrian is not directly in front of the vehicle or not fully visible;

- The pedestrian does not stand upright or is a shorter child;
- A crowd of people or the pedestrian is in the tree shadow or in the dark;
- There is an animal ahead;
- There are foreign obstacles on the ground ahead (such as a roadblock, an isolation pile, an isolation strip, big rocks, other scattered objects, etc.);
- There are signs, guardrails, bridges, buildings, etc. ahead;
- The vehicle drives on a slope, the section coming on/off the bridge or curve;
- The vehicle is in Reverse gear;
- The vehicle is in braking or harsh acceleration state;
- The driver overrides the vehicle actively, such as depressing the accelerator pedal firmly, turning the steering wheel sharply, etc.;
- The time interval since the last braking action by the forward collision assist system is too short;
- There are related faults that affect function triggering, such as faults in the body stability control system, abnormal verification of body-related signals, etc.;
- Camera obscured or unclear (smudged, frosted), camera unable to focus, camera unable to calibrate;
- Camera failure due to weather damage to the camera's field of view caused by low sun altitude, glare, road spray, windscreen icing, rain, snow, fog, etc., or system malfunction;
- The radar is blocked or maladjusted, or the system malfunctions;
- In towing mode;
- An open field with only stationary objects (e.g., an empty parking lot) may deteriorate the radar sensor function.

Blind Spot Assist (BSD, LCA)*

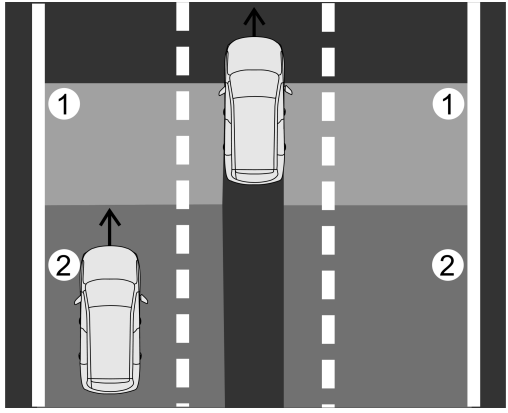

Function Introduction

The blind spot assist can be turned on or off in the Rearward Driver Assistance System Settings interface of the entertainment display.

The blind spot assist includes two active safety assist functions, Blind Spot Detection (BSD) and Lane Change Assist (LCA), which are intended to monitor the vehicles at the oblique rear and sides, giving an alarm to the driver when necessary.

The Blind Spot Detection (BSD) alarms the vehicles in the blind spot (1) of your vehicle; the Lane Change Assist (LCA) alarms the vehicles approaching quickly with a potential collision risk in the adjacent lanes (2).

Alarm Mode

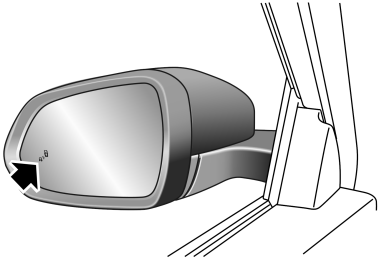

During driving (at a speed over 15 km/h(10 mph)), when the system detects a vehicle is running in the blind spot of the exterior rearview mirror of your vehicle or a vehicle approaching behind in the adjacent lane, the warning lamp at the corresponding side will illuminate. If the relevant indicator is selected, the warning lamp will flash, warning the driver that it is dangerous to continue changing lanes.

Note: The warning lamps will not illuminate whilst you are overtaking another vehicle and your speed is greater than that of the vehicle you are passing, even though it is in the blind zone.

Rear Cross Traffic Assist (RCTA, RCTB)*

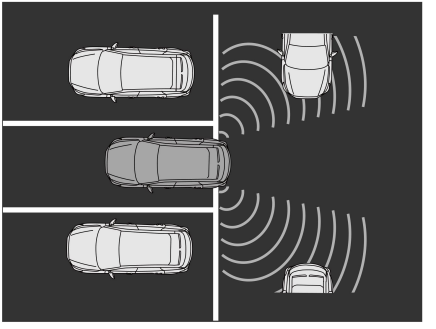

Function Introduction

This function includes Rear Cross Traffic Alert (RCTA) and Rear Cross Traffic Brake (RCTB).

During reversing, the Rear Cross Traffic Alert (RCTA) monitors the vehicles approaching from the left, right and rear of your vehicle via sensors, and provides alarms when there is a risk in reversing. The Rear Cross Traffic Brake (RCTB) is an extended function of Rear Cross Traffic Alert (RCTA). In addition to providing alarms, the system will perform emergency braking to avoid the risk of collision if the driver fails to take safety measures.

Alarm Mode

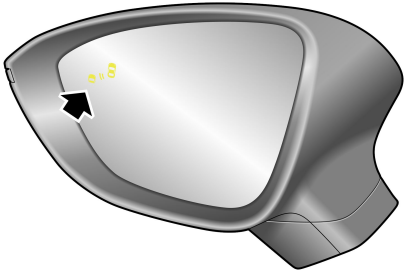

When there is a risk in reversing, the warning lamp at the corresponding side illuminates, and the instrument pack and entertainment display will show warning message. If the driver fails to take safety measures, the system will perform emergency braking.

Rear Collision Warning (RCW)*

Function Introduction

The rear collision warning can be turned on or off in the Rearward Driver Assistance System Settings interface of the entertainment display.

During driving, when other vehicles and targets in the current lane approach your vehicle and produce collision risk, the Rearward Collision Warning (RCW) will alert the driver that a target of risk is approaching, and also alert the vehicles behind of the situation.

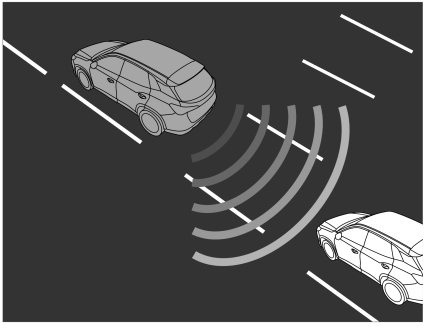

Alarm Mode

When there is a risk of collision, the hazard warning lamps on your vehicle flash to warn the vehicles behind.

Door Opening Warning (DOW)*

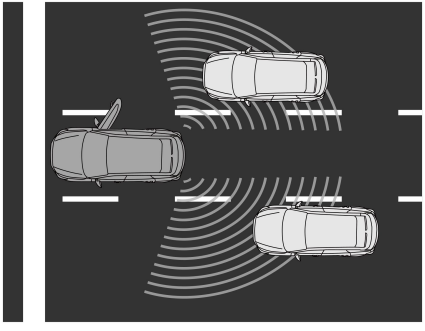

Function Introduction

The door opening warning can be turned on or off in the Rearward Driver Assistance System Settings interface of the entertainment display.

When the vehicle is stationary, the Door Opening Warning (DOW) monitors the vehicles, riders or pedestrians and other targets approaching your vehicle from behind through sensors at the rear and provides alarms if there is a risk in opening the door. This helps to prevent damage and accidents involving your door and approaching vehicles.

Alarm Mode

When there is a risk of collision, the warning lamp at the corresponding side illuminates. In this case, if the door opening action continues, the warning lamp will flash accompanied by an acoustic alarm.

Ultrasonic Sensor PDC System

The purpose of the parking assist system is only to assist the driver during parking! The ultrasonic sensors may not be able to detect certain types of obstruction, e.g. narrow posts, small objects close to the ground, objects above the tailgate and some objects with nonreflective surfaces.

Keep the ultrasonic sensors free of dirt, ice and snow. If deposits build up on the surface of an ultrasonic sensor, its performance may be impaired. When washing the car, avoid aiming high pressure water jets directly at the ultrasonic sensors from close range.

Rear PDC System

The ultrasonic sensors on the rear bumper monitor the area behind the vehicle to search for obstacles. If an obstacle is detected, the system will calculate its distance from the rear of the vehicle and communicates the message to the driver by sounding warning chimes.

Note: The ultrasonic radar detection area on both sides of the vehicle bumper has limitations, so please park carefully.

Note: The PDC system and rearward driver assistance system are unavailable when tow mode is enabled.

Turning on PDC System

The vehicle automatically turns on the PDC system when entering R gear.

A short beep is given by the PDC system after R gear is selected to indicate that the system is operational. If an obstacle is detected, the system will alert the driver with warning alarms. As the car moves closer to the obstacle, the warning sounds are transmitted more rapidly.

Note: If a longer, higher pitched sound is emitted (for approximate 3 seconds) when reverse gear is selected, this indicates a fault in the system. Please contact a local Authorised Repairer for service.

Turning off PDC System

The vehicle automatically turns off the PDC system when the gear is shifted to P or when the vehicle speed exceeds approx. 15 km/h(10 mph).

Parking Camera*

The purpose of the parking camera system is to assist the driver during parking! The camera has a limited field of view and cannot detect obstructions outside the field of view.

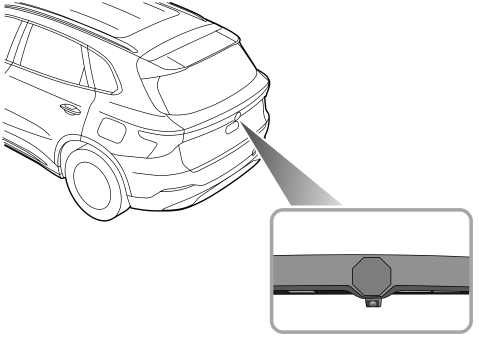

Some models feature a rear parking camera fitted between the rear license plate lamps.

When R gear is selected, the camera will provide an image of what is immediately behind the vehicle. This image will be shown on the entertainment display.

360 Around View Monitor*

The purpose of the 360 around view system is to assist the driver during parking! The cameras have a limited field of view and cannot detect obstructions outside the field of view.

Although the infotainment display can provide images around the vehicle, please still pay attention to the current actual road conditions for your driving safety.

With the 360 around view monitor (AVM) system working, the entertainment display interface will show a 360 around view of the vehicle to facilitate the observation of surrounding environment and make the driving environment much safer. You can touch buttons on the display to view images from different perspectives around the vehicle.

You can enter the 360 around view monitor (AVM) system by the following operations:

- Select R gear.
- Press the 360 switch.
- Set the function of steering activation 360 through the entertainment display. When the enabling conditions are met, the 360 around view monitor (AVM) system automatically turns on.

Note: When the vehicle speed is greater than the set value, the 360 around view monitor (AVM) system automatically exits.

Note: On some models, the speed value for the AVM system to exit automatically could be set on the entertainment display. Please refer to "Entertainment Display" for details.

Dynamic Transparent Chassis

The dynamic transparent chassis function is to take the road surface image collected by the cameras in advance during the vehicle movement and then present a transparent effect using technical processing, and then transmit to the entertainment display, so that it is convenient for the driver to see the road surface condition in the vehicle. A soft switch in the interface allows this function to be switched On/Off.

Note: The dynamic transparent chassis does not recognize changes that may occur in the environment underneath the vehicle when it is stationary. Please drive carefully when using it and consider the actual environment, so as not to cause damage to the vehicle.

Driver Status Monitoring System

The driver monitoring system is only an auxiliary driving tool. Under all circumstances, the driver must be responsible for the safety of the vehicle. Fatigue driving and distracted driving are strictly prohibited. The driver must always concentrate on driving carefully.

The driver monitoring system camera is located in front of the steering wheel.

Note: Do not block the camera area, or the system cannot function normally.

Note:

Please check and keep the camera clean and unobstructed to ensure correct functioning of the monitoring system;

DO NOT use abrasive or sharp objects to clean the camera;

DO NOT tap the camera.

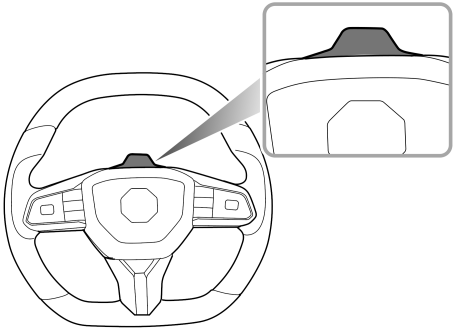

The driver monitoring system can identify driver states such as fatigue and distraction through the camera, it can provide warnings to the driver based on the identified level of fatigue and distraction.

The driver monitoring system can be set in the entertainment display.

***Note:** The fatigue state recognised by the driver monitoring system is mainly based on yawning and eyes closing; the distraction state is mainly based on the line of sight and head posture.*

MG Pilot Customisation

MG Pilot Custom function switch is located on the entertainment display, this allows you to save and quickly apply your personalized settings for the functions on the "Intelligent Driving" page.

- Long press to memorize your current settings;
- Short press to apply the saved personalized settings.

You can also pull down the middle of the status bar to quickly apply this function on the shortcut control page.

Note: To ensure driving safety, it is recommended to quickly apply the intelligent driving function in the P gear environment.

Road Emergency Response

Hazard Warning Devices 282

Jump Start 283

Towing Hook and Transport 285

Suspended Towing 288

Tyre Repair 290

Hazard Warning Devices

Warning Triangle

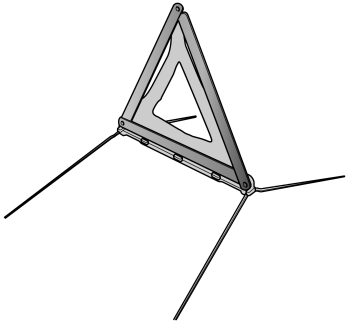

The warning triangle is stowed under the boot carpet.

If you have to stop your car on the road in an emergency, you must place a warning triangle approximately 50 ~ 150 metres behind the car, if possible, and press the hazard warning lamp button to warn other road users behind.

Jump Start

NEVER attempt to power the vehicle by pushing or towing.

Make sure that both batteries are of the same rated voltage (12 volts) and that the booster cables are approved for use with 12 volt car batteries.

Ensure sparks and open flames are kept well away from the front compartment.

Ensure that booster cables are firmly connected and do not touch each other or other moving parts, otherwise, sparks may be caused, resulting in fire or explosion.

Using booster cables (jump leads) from a donor battery, or a battery fitted to a donor vehicle, is the only approved method of powering a car with a flat battery.If the battery from a donor vehicle is to be used, make sure that the vehicles are parked so that the two batteries are adjacent to one another and that both the vehicles do not touch.

Ensure that the vehicle is powered off, and all electrical appliances of the vehicle have been turned off, then follow the instructions below:

1 Connect the red booster cable between the positive (+) terminals of both batteries. Connect the black booster cable from the negative (-) terminal of the donor battery (A) to a good earth point (an steering gear assembly housing or other unpainted surface, for example) of the disabled vehicle (B), as far away from the battery as possible and bypassing the brake line.

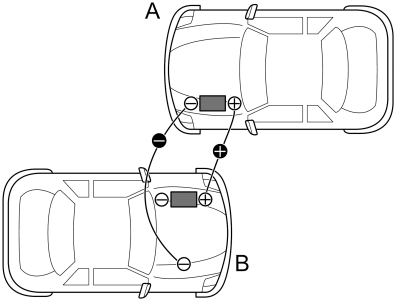

2 Start the donor vehicle and allow it to idle for several minutes.

3 Now switch the vehicle power system of the vehicle with the discharged battery to READY. If the disabled vehicle will not switch to READY it may need to be repaired. Please contact an MG Authorised Repairer.

4 After both vehicles are started normally, power off the vehicles.

5 Disconnect the booster cables. The disconnection procedure is an exact reversal of the connection procedure, i.e. disconnect the black negative cable from the earth point on the disabled vehicle first.

IMPORTANT
Do Not operate any electrical appliances of the vehicle with low power before dismantling the jumper cable.

Note: when the battery is charged, the vehicle will still not start or enter READY mode, contact an MG Authorised Repairer.

Note: It is recommended to turn off the lights, A/C and other comfort appliances after starting the vehicle to reduce battery power consumption.

Note: It is recommended to ensure that the disabled vehicle remains powered or runs for more than 1 hour after it is started, in order to recover the battery power.

Towing Hook and Transport

Vehicle Towing

Towing hook

Do not use a tow rope that is twisted, the towing eye may become unscrewed.

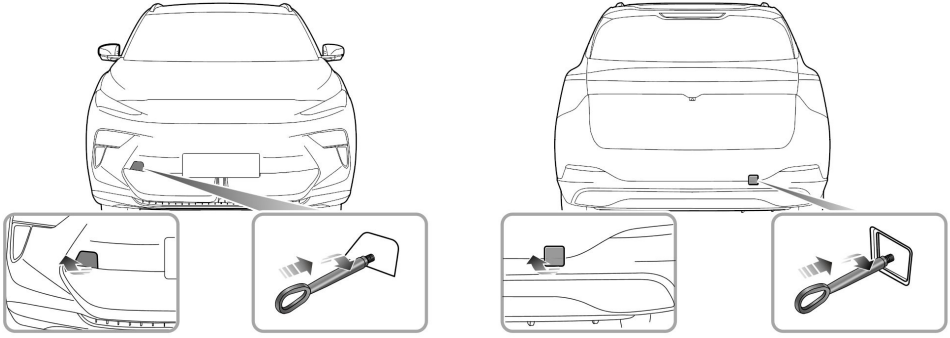

Your vehicle is equipped with 2 towing eyes (located at the front and the rear of the vehicle), which are used for fitting the towing hook in the tool kit. The tool kit is placed beneath the loadspace carpet. To fit the towing hook, remove the small cover from the bumper. During removal, the front small cover plate can be pried at the bottom and opened in the direction

shown in the picture. Press the upper part of the rear small cover plate to tilt it up, and then remove it in the direction as shown. Then screw the towing hook via the small hole into the threaded hole in the bumper beam (see illustration). Ensure the towing hook is fully tightened!

Note: The small cover removed may be secured to the bumper by a plastic cord.

The towing hooks can be used as the towing point to tow your vehicle when a breakdown or accident occurs. They are not designed for towing other vehicles. The vehicle can be towed using a tow rope but a towing bar is recommended.

Vehicle Transport

If your vehicle needs to be transported, a special transporter is recommended. Secure the vehicle on the transporter as follows:

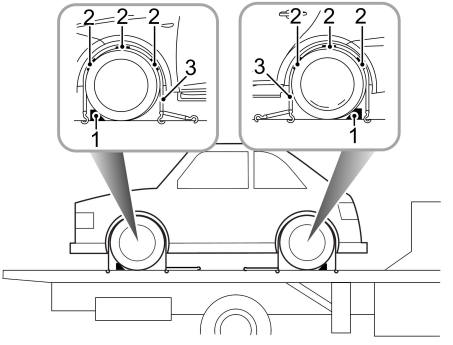

1 Apply the parking brake and engage in P gear.

2 Fit wheel chocks (1) as shown, then position the anti slip rubber blocks (2) around the circumference of the tyre.

3 Fit the lashing straps (3) around the wheels and secure to the trailer. Tighten the straps until the vehicle is securely held.

Suspended Towing

DO NOT tow the vehicle with all four wheels on the ground. Use only suspension towing or trailer, or the transmission may be damaged. When pushing or towing the vehicle from a dangerous situation or onto the transporter, the speed must remain below 3 mph (5 km/h) and be completed within 3 minutes.

When towing the vehicle, DO NOT suddenly accelerate or brake suddenly, this can cause accidents.

DO NOT tow the vehicle with its driven wheels rotating on the ground, otherwise the drive motor may be damaged.

When using suspended towing method, be careful not to allow the high-voltage battery pack to touch the ground.

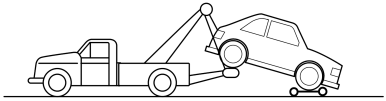

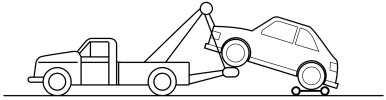

Suspended towing is the best method for recovering a vehicle that needs to be towed. When suspending, auxiliary wheels should be used to keep the wheels off the ground, otherwise the electric drive unit and other components may be damaged due to the drive wheels being in contact with the ground. When towing, the hazard warning lamps should be turned on and no passengers must be left in the vehicle being towed, otherwise the vehicle may become damaged or personal injury may be caused.

Tyre Repair

Tyre Repair Tool

The tyre repair tools are placed under the loadspace carpet. Lift the loadspace carpet with the lifting strap to remove the tools from the carpet support board.

Tool Identification

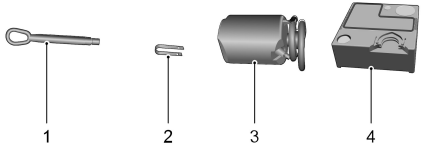

1 Towing Hook

2 Wheel Bolt Cap Removal Clamp

3 Repair Fluid

4 Electric Air Pump

Tyre Repair

1 Remove the label at the bottom of the repair fluid reservoir and attach it to the steering wheel to remind the driver not to exceed 50 mph (80 km/h) .

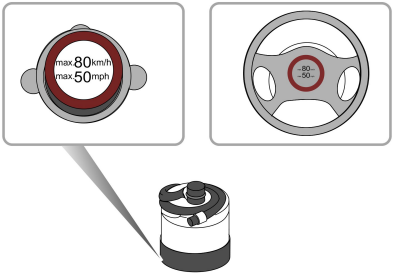

2 Connect the air hose of the electric air pump to the repair fluid reservoir. Invert the repair fluid reservoir into the slot of the electric air pump. Remove the valve dust cap of the damaged tyre and connect the hose connector of the repair fluid reservoir to the tyre valve. Ensure that the power switch of the electric air

pump is switched off (i.e., press 'o'), then connect the electric air pump plug to 12 V power socket and turn the vehicle power system on.

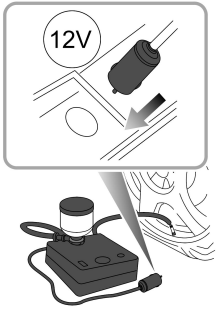

Note: To avoid battery overdischarge, please start the vehicle.

3 Switch on the power switch of the electric air pump (i.e., press '-'), to start pumping sealant into the tyre. The repair fluid reservoir will become empty after approximately 30 seconds. The tyre should reach the specified pressure within 5 or 10 minutes.

Note: When the electric air pump works, the pressure gauge may briefly reach 87 psi(6 bar) and then the pressure begins to drop to normal.

4 When the required pressure is reached, switch off the electric air pump (i.e., press 'o').

Note: If the required tyre pressure cannot be reached within 10 minutes, remove the tyre repair component and move the vehicle for a distance equivalent to one tyre revolution before checking the tyre; if the required pressure still cannot be reached, it indicates that the tyre is severely damaged and unrepairable. Therefore, you should seek assistance from a local MG authorised repairer.

Note: Consecutive operation of the electric air pump for more than 10 minutes may result in the motor overheating, causing permanent damage.

Note: It is prohibited to switch the electric air pump power on and off for several times in a row.

5 Remove the repair fluid reservoir from the slot and disconnect the hose of the reservoir from the tyre valve. Then pull the plug off the electrical air pump from the 12V power socket.

6 Please drive the car within 1 minute upon the completion of the operations to allow the sealant to distribute evenly in the tyre, ensuring the vehicle speed does not exceed 50 mph (80 km/h) and the driving mileage not exceed 3.1 mi (5 km) . Then find a safe place to stop and recheck the tyre pressure.

If the tyre pressure has dropped to less than 11.6 psi (0.8 bar), it indicates that the tyre is severely damaged and unrepairable, please contact a local MG Authorised Repairer.

If the tyre pressure is between 11.6 psi (0.8 bar) and the specified pressure, inflate the tyre with the electric air pump until it reaches the specified pressure. Repeat Step 6.

If the tyre pressure is equal to the specified pressure, you may continue driving but please ensure the vehicle speed does not exceed 50 mph (80 km/h) and the driving mileage does not exceed 124 mi (200 km) .

Note: The tyre repair kit is only applicable to tyre damage caused by the pins with a diameter no more than 6 mm, and only the tread as shown in Figure A can be repaired, but not place as shown in Figure B.

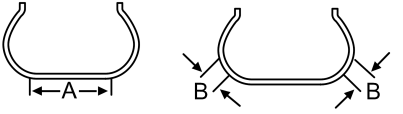

Maintenance

Maintenance	294
High-voltage Battery Pack	297
Bonnet	299
Front Compartment	301
Cooling System	302
Brake	304
Fuse Replacement	306
12V Battery Maintenance and Replacement	313
Bulb Replacement	315
Washer	316
Wipers	318
Tyres	321
Cleaning and Vehicle Care	327

Maintenance

Regular Maintenance

The safety, reliability and performance of your vehicle will depend partly on how well it is maintained. You must ensure that maintenance is carried out when required and according to the information contained in the Warranty and Maintenance Handbook or the main MG website for your country.

Maintenance

After the completion of each service, the next service interval will be set by your local MG authorised repairer.

Note: If the maintenance is not carried out (or the display is not reset by an MG Authorised Repairer after a service), the maintenance display will not report the correct information.

Maintenance History

Ensure your local MG Authorised Repairer registers the Maintenance History after each maintenance.

Fluid

Please use fluids recommended and approved by MG . Refer to "Recommended Fluids and Capacities" in the "Technical Data" chapter.

IMPORTANT
Use of fluids or additives unsuitable for this vehicle may damage parts or equipment, please consult a local Authorised Repairer for details.

Owner Maintenance

Any significant or sudden drop in fluid levels, or uneven tyre wear, should be reported without delay to the MG Authorised Repairer.

In addition to the maintenance referred to previously, some simple checks must be carried out more frequently.

Daily Check

- Operation of lights, horn, wipers, washers and warning lights.
- Operation of seat belts and brakes.
- Look for fluid deposits underneath the car that might indicate a leak.
- Check tyre appearance.

Weekly Check

- Coolant level.
- Brake fluid level.
- Windscreen washer fluid level.
- Tyre pressure.
- Operate air conditioning.

Special Operating Conditions

If your vehicle is frequently used in dusty conditions, or operated in extreme climates where sub-zero or very high ambient temperatures are normal, more frequent attention may need to be paid to maintenance requirements. You need to carry out special maintenance operations (refer to Warranty and Maintenance Handbook or contact your local MG Authorised Repairer).

Safety During Maintenance

Note: Cooling fans may begin operating after the vehicle has been switched off and continue operating for a number of minutes. Keep clear of all fans while working in the front compartment.

If you need to carry out maintenance, observe the following safety precautions at all times:

- If the vehicle has just been driven, DO NOT TOUCH cooling system components until the drive motor has fully cooled.
- DO NOT TOUCH electrical leads or components when the power is on.
- DO NOT work underneath the vehicle with a jack as the means of support.
- Wear protective clothing and work gloves.
- Remove watches and jewelry before working in the front compartment.
- DO NOT allow tools or metal parts of the vehicle to make contact with the battery leads or terminals.

Toxic Fluids

Fluids used in the vehicle are poisonous and must not be swallowed or brought into contact with open wounds.

These include: battery acid, coolant, brake fluid and windscreen washer fluid.

For your own safety, ALWAYS read and obey all instructions on labels and containers.

High-voltage Battery Pack

Precautions and restricted conditions for use of battery

If the vehicle is going to be parked for a long time, it must be charged at least once every 3 months (the battery power must remain above 50% as displayed in the instrument pack after charging).

It is strictly prohibited to park the vehicle for more than 7 days when the high-voltage battery pack is in a low state of charge (there is no effective mileage display on the instrument panel).

Failure to follow these guidelines will result in HV battery damage and invalidate the warranty.

Do not attempt to disassemble the high-voltage battery pack or any high-voltage components - these are dangerous. Any traces of disassembly or damage caused by attempted disassembly will void the warranty.

1 DO NOT park the vehicle in conditions where the ambient temperature exceeds 45°C for more than 15 days. This will effect the performance and service life of the high voltage battery.

2 To better extend the service life of high-voltage battery pack, it is recommended to charge the vehicle using a slow charge method. Fast charging is mainly used for emergency and long-distance driving.

3 It is recommended to charge the vehicle slowly every month to reach 100% battery capacity and balance the battery to extend the service life of the high-voltage battery pack. The battery management system will monitor the status of the high-voltage battery pack. When it is detected that no equalisation charge for high-voltage battery pack has been carried out for a certain period of time, you must carry out an

equalisation charge. For operation method, please refer to 'Equalisation Charging' in 'Charging and Discharging Requirements' chapter.

4 When an accident causes damage to the high-voltage battery pack or any of its related components, or any repairs are made to the high voltage system, the vehicle must be inspected at an MG Authorised Repairer.

5 If the vehicle body is damaged due to an accident and needs to be repaired, in order to avoid damage to the high-voltage battery pack, please contact an MG Authorised Repairer to conduct related operations after removing the high-voltage battery pack.

IMPORTANT
Only fully trained and qualified personel are allowed to work on the high voltage systems and components of this vehicle. Any disassembly of such systems or components is strictly prohibited.

Bonnet

Opening the Bonnet

DO NOT drive when the bonnet is not closed or retained only by the safety catch.

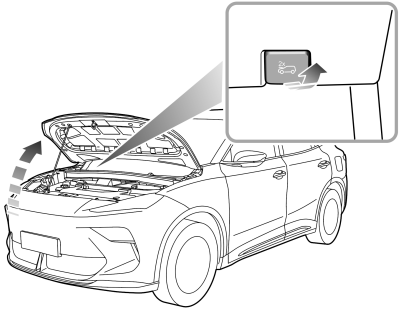

1 Pull the bonnet opening handle from inside the vehicle 2 consecutive times.

2 Raise the bonnet from the front of the vehicle and support with the support rod.

Closing the Bonnet

Support the bonnet using one hand, release the support rod using the other hand, and place it firmly into the support rod base. Hold the bonnet with both hands and lower it down. When the bonnet drops to about 20 ~ 30 cm above its lock position, apply a downward force to fully close the bonnet.

By attempting to lift the front edge of the bonnet, check if the lock is fully engaged after closing the bonnet. If it is not fully engaged, you must repeat the operation.

Bonnet Open Alarm

If the bonnet is not fully locked, the corresponding alarm icon will be shown on the message centre display. If it is found that the bonnet is not fully locked while driving, an audible warning will sound.

IMPORTANT
• For safety reasons, the bonnet must be closed securely when driving. Therefore you must check after closing the bonnet that the bonnet is securely latched, e.g. the bonnet edge is flush with the body of the car. • If the bonnet is not fully closed when driving, you should stop the car immediately while ensuring safety and fully close the bonnet before driving again. • Beware of injury to hands while fully closing the bonnet with a downward force.

Front Compartment

While working on parts inside the front compartment, always observe the safety precautions listed in 'Safety in the Garage'. Refer to 'Maintenance' in this section.

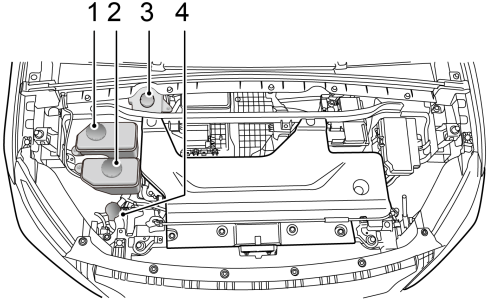

1 High-voltage Battery Pack Coolant Expansion Tank
2 Electric Drive Unit Coolant Expansion Tank
3 Brake Fluid Reservoir
4 Washer Fluid Reservoir

Cooling System

Coolant Check and Top Up

DO NOT remove the coolant pressure cap when the cooling system is hot - escaping steam or hot coolant could cause serious injury.

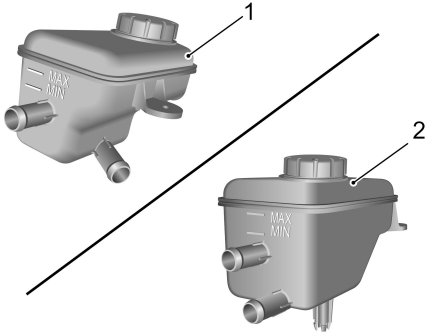

1 High-voltage Battery Pack Coolant Expansion Tank

2 Electric Drive Unit Coolant Expansion Tank

It is recommended to check the cooling system weekly. Conduct the check when the cooling system is cold and with the vehicle resting on level ground. If the coolant level is below ' MIN ' mark, remove the coolant expansion reservoir cap and add coolant. Ensure the level does not exceed the ' MAX ' mark.

Prevent coolant from coming into contact with the vehicle body when topping up. Coolant will damage paint.

If the coolant level falls appreciably during a short period, which is suspected to have leakage, please go to the local Authorised Repairer for service in time.

Coolant Specification

Coolant is poisonous and can be fatal if swallowed - keep coolant containers sealed and out of the reach of children. If accidental contact of coolant by children is suspected, seek medical assistance immediately.

Prevent the coolant from coming into contact with the skin or eyes. If this occurs, rinse immediately with plenty of water. If eyes are still red, painful or uncomfortable, seek medical attention immediately.

Please use the recommended and certified coolant. Refer to 'Recommended Fluids and Capacities' in "Technical Data" chapter.

Note: The addition of corrosion inhibitors or other additives to the cooling system of this car may severely disrupt the efficiency of the system and cause parts damage. For cooling system issues please consult an MG Authorised Repairer.

Brake

DO NOT rest your foot on the brake pedal while driving; this may overheat the brakes and reduce their efficiency, causing excessive wear to the brake components.

The free travel of brake pedal is in the range of 0 ~ 30 mm.

Reasonable usage scope of brake friction pair: not less than 2 mm for thickness of brake pads, 23 ~ 25 mm for front brake disc, and 10 ~ 12 mm for rear brake disc.

For the first 900 miles (1500 km), you should avoid situations where heavy braking is required.

Remember that regular servicing is vital to ensure thatall the brake components are examined for wear at thecorrect intervals, and replaced when required to ensurelong term safety and optimum performance during theintervals outlined in the Service Schedule.

The vehicle needs to run in for 500 miles (800 km) after the brake pad or disc replacement.

Brake Fluid Check and Top Up

Brake fluid is highly toxic, keep the brake fluid sealed and stored out of reach of children. If accidental contact of brake fluid is suspected, seek medical attention immediately.

Prevent brake fluid coming into contact with the skin or eyes. If this occurs, rinse immediately with plenty of water. If eyes are still red, painful or uncomfortable, seek medical attention immediately.

The brake fluid level should be checked weekly when the system is cold and with the car on level ground. Clean the cover first before opening the brake fluid reservoir.

The brake fluid level can be seen through the reservoir and should be maintained between the " MAX " and " MIN " marks.

Note: Do not allow the brake fluid level to drop below the 'MIN' mark or rise above the ' MAX ' mark.

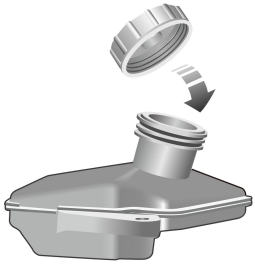

Note: Brake fluid will damage painted surfaces. If you accidentally spill the brake fluid on the painted surface, soak up any spillage with an absorbent cloth immediately and wash the area with water or car shampoo.

Fuse Replacement

Fuse

Fuses are simple circuit breakers which protect the car's electrical equipment by preventing the electrical circuits from being overloaded. A blown fuse may be indicated when the item of electrical equipment it protects stops working.

If you suspect a fuse it can be checked by removing it from the fuse box and looking for a break in the wire inside the fuse.

IMPORTANT
• NEVER attempt to repair a blown fuse. ALWAYS replace a fuse with one of the same rating, otherwise the fire may be caused due to electrical system damage or circuit overload. • If a replaced fuse is blown immediately, please contact an Authorised Repairer as soon as possible.

It is recommended to have spare fuses in the vehicle, which can be obtained from an MG Authorised Repairer.

Fuse Box

The vehicle is equipped with 2 fuse boxes:

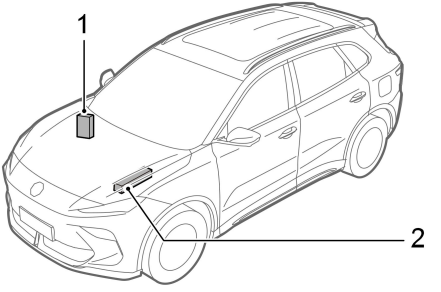

1 Passenger compartment fuse box (behind the driver side knee trim panel)

2 Front compartment fuse box (left of the front compartment)

Passenger Compartment Fuse Box

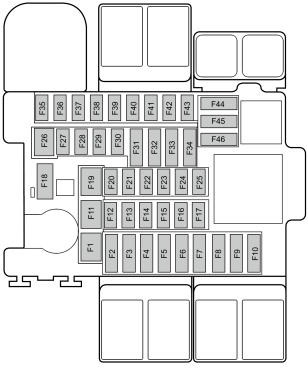

Fuse Check or Replacement

1 Power off the vehicle, turn off all electrical appliances, and disconnect the negative battery cable.

2 Remove the driver side knee trim panel to access the fuse box.

3 Clamp the fuse head with a fuse extraction tool in the fuse box cover of the front compartment, pull and remove the fuse, and check whether the fuse is blown.

4 If a fuse is blown, replace it with another fuse of the same type and same ampere value.

Fuse Specification

Code	Spec.	Function
F1	-	-
F2	5A	High-voltage electric heater
F3	7.5A	Gateway
F4	15A	Heated steering wheel
F5	5A	Driver door combination switch, exterior rearview mirrors and master light levelling switch, EPB switch, infotainment control panel, clock spring

Code	Spec.	Function
F6	5A	Kick sensor, communication module
F7	5A	Gear shift control unit, instrument pack
F8	7.5A	Central display, front view camera module, rain, light and sunlight sensor, digital radio module
F9	5A	Charging port
F10	-	-
F11	30A	Driver seat control module, driver seat adjustment switch
F12	-	-
F13	5A	Driver monitoring system
F14	10A	Sensing and diagnostic module
F15	15A	Super lock motor

Code	Spec.	Function
F16-F17	-	-
F18	10A	Electronic steering column lock
F19	-	-
F20	10A	Data link connector (DLC)
F21	-	-
F22	10A	Automatic temperature control
F23	-	-
F24	20A	Entertainment mainframe
F25	5A	Rear driver assistance radar
F26	30A	Body control module
F27-F29	-	-
F30	30A	Body control module
F31-F34	-	-
F35	5A	Alcolock

Code	Spec.	Function
F36-F37	-	-
F38	30A	Sunroof
F39-F43	-	-
F44	15A	Front console power socket
F45	5A	Rear USB port, wireless charging module of mobile phone, pedestrian alert control module
F46	-	-

Front Compartment Fuse Box

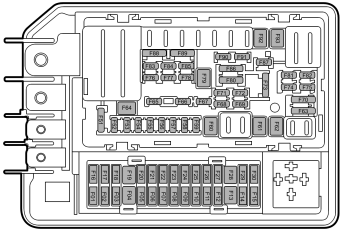

Fuse Check or Replacement

1 Power off the vehicle, turn off all electrical appliances, and disconnect the negative battery cable.

2 Press the lock catch to open the upper cover of front compartment fuse box.

3 Clamp the fuse head with a fuse extraction tool in the upper cover, pull and remove the fuse, and check whether the fuse is blown.

4 If a fuse is blown, replace it with another fuse of the same type and same ampere value.

Fuse Specification

Code	Spec.	Function
F1	20A	Towing control module
F2	-	-
F3	15A	Towing control module
F4-F12	-	-
F13	40A	Cooling fan
F14-F23	-	-
F24	25A	Power tailgate control module
F25	5A	Power tailgate control module
F26-F50	-	-
F51	15A	Horn relay, rear wiper motor relay
F52	5A	Active intake grille, electric vehicle communication controller
F53	-	-
F54	30A	Body control module
F55	30A	Body control module
F56	-	-
F57	5A	Electric parking motor control unit
F58	30A	Body control module
F59	-	-
F60	30A	Heated rear windscreen
F61	40A	Integrated braking system (IBS)

Code	Spec.	Function
F62	30A	Power window regulator motor
F63	5A	SDM module, instrument pack, gateway, parking assist sensor, body control module
F64-F65	-	-
F66	10A	Electric exterior rearview mirror
F67	-	-
F68	20A	Electric parking motor control unit
F69	30A	Collision power module
F70	5A	Integrated braking system, electric power steering, intelligent electronic control unit, collision power module, high-voltage battery pack system

Code	Spec.	Function
F71-F72	-	-
F73	5A	Battery sensor, brake pedal switch
F74-F76	-	-
F77	15A	PEB Coolant pump
F78	20A	High-voltage battery pack system
F79	50A	Air conditioning inlet box
F80	10A	Intelligent electric control unit
F81	15A	PEB Coolant pump
F82	-	-
F83	15A	Battery pack coolant pump
F84	5A	Cooling fan motor
F85	15A	Front wiper motor
F86	15A	Heat pump controller

Code	Spec.	Function
F87	5A	Combined charging unit (CCU)
F88	5A	Electric air conditioning compressor, battery pack heater
F89	5A	Exterior rearview mirrors and master light levelling switch, left headlamp, right headlamp
F90	-	-
F91	30A	Body control module
F92	25A	Front wiper relay
F93	30A	Automatic window regulator motor
A	-	-
B	-	-
C	80A	Electric power steering
D	-	-

Code	Spec.	Function
E	-	-
F	-	-
G	-	-
H	60A	Integrated braking system (IBS)

12V Battery Maintenance and Replacement

Battery Maintenance

DO NOT use on-board electrical appliances for an extended period of time when the vehicle if further information is required, otherwise the battery may become flat, resulting in the failure to start the vehicle and the reduction of battery life.

Always store batteries upright, and never attempt to dismantle a battery.

Please pay attention to the following precautions:

- ***Stay away from flammable materials.***
- ***Wear goggles during maintenance.***
- ***Keep away from children.***
- ***The battery contains acidic liquids.***
- ***The battery is explosive.***
- ***Please read the Owner's Handbook carefully.***

The battery is located in the front compartment and designed to be maintenance free, so topping-up is unnecessary.

According to the current load condition and the status of the battery, the system may limit the power of some electrical appliances, please start the vehicle as soon as possible to charge the battery.

Note:

It is recommended that the vehicle be placed in READY mode for more than half an hour per week to help prolong the life of the battery.

When the vehicle will not be used for an extended period of time (More than a month), it is recommended that the battery negative terminal should be disconnected.

Make sure that the vehicle is powered off before connecting or disconnecting the negative battery cable.

Battery Replacement

The battery contains sulphuric acid, which is corrosive.

Please contact an Authorised Repairer to remove and fit the battery. Only fit a replacement battery of the same type and specification as the original to maintain the correct vehicle functionality.

The battery must be disposed of using an approved method, as used batteries can be harmful to the environment. It shall be recycled by a professional company. Please consult an Authorised Repairer for more details.

Bulb Replacement

Bulb Specification

The light sources of this model are all LED lamps, which cannot be replaced individually. If the light source is damaged, please contact an MG Authorised Repairer.

Washer

Washer Fluid Check and Top Up

DO NOT allow washer fluid to come into contact with naked flames or sources of ignition since washer fluid is flammable.

When filling the washer fluid, DO NOT let the washer fluid spill on parts around the powertrain or on the paint surface of vehicle body. In case the washer fluid is spilled on hands or other parts of the body, please immediately wash with clean water.

Check the washer fluid level regularly. When the level of washer fluid is low, please top up the washer fluid as instructed. Use the washer fluid recommended and certified by MG. Refer to "Recommended Fluids and Capacities" in the "Technical Data" chapter.

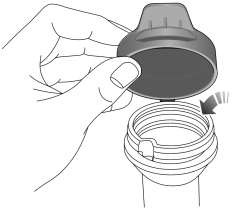

Note: DO NOT use an anti-freeze or acid solution (such as diluent of vinegar) in the fluid reservoir - anti-freeze will damage paintwork while acid solution will damage the washer motor.

IMPORTANT
• Use the washer fluid recommended and certified by the manufacturer. Misuse of washer fluid in winter may cause damage to the washer motor due to freezing. • Using the washer switch when there is no washer fluid may cause damage to the washer motor. • Operating the wipers when the windscreen is dry and there is no washer fluid may cause damage to the windscreen and wipers. Please spray the washer fluid and start the wipers when there is adequate washer fluid.

Washer Nozzles

The front windscreen washer nozzles are located on the A/C air intake grille panel in the front compartment, and are configured during the factory settings, so generally there is no need for adjustments. To adjust the washer nozzle, you can insert a small flat-bladed screwdriver in the gap (the black area indicated by the arrow) between the housing (1) and the nozzle (2) and turn the nozzle downward or upward slightly to obtain an appropriate injection angle.

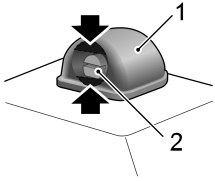

Operate the washer to spray water periodically to check if the washer nozzles are clean and in the correct direction. If the nozzle is obstructed, insert a needle or thin metal wire into the hole to remove the obstruction.

Wipers

Wiper Blades

IMPORTANT
• Grease, silicon and petroleum products impair the blade's wiping capability. Clean the wiper blades in warm soap water and check their status periodically. • Clean the windscreen frequently. DO NOT use wiper blades to remove stubborn or ingrained dirt, it will reduce their effect and their life span. • If signs of hardness or cracking in the rubber are found or if the wipers leave streaks or unwiped areas on the windscreen, then the wiper blades should be replaced. • Clean the windscreen regularly with an approved glass cleaner and ensure the windscreen is thoroughly cleaned before the replacement of wiper blades. • Only fit the wiper blades that are identical to the original specification. • Clean ice and snow from the wipers and ensure they are not frozen or otherwise, sticking to the windscreen before attempting to operate them.

Front Windscreen Wiper Blade Replacement

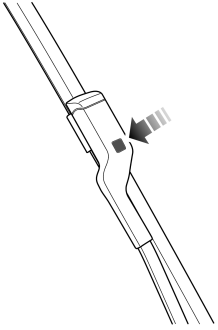

1 With the bonnet closed, click the Settings interface on the intelligent display to enable the Wiper Service mode, and the wiper will automatically move to the service position and stop on the windscreen.

2 Lift the wiper arm away from the fixed position of windscreen.

3 Turn the wiper blade to the extreme position, press the button (as illustrated) on the wiper blade connector, and pull the wiper blade upward to disengage it from the wiper arm.

4 Unhook the blade from the wiper arm and discard.

5 Turn a new wiper blade to the same position, and insert the connector of the wiper blade into the wiper arm until a "click" is heard to ensure complete insertion.

6 Put the wiper assembly back onto the windscreen, and check whether the wiper blade is fixed correctly onto the wiper arm.

7 Disable the Wiper Service mode in the Settings interface on the intelligent display, and the wiper will exit the service mode and automatically return to its original position.

Rear Windscreen Wiper Blade Replacement

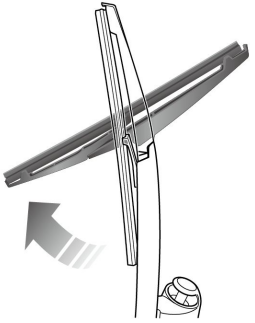

1 Lift the wiper arm away from the windscreen.

2 Turn the wiper blade as illustrated to disengage it from the wiper arm and discard.

3 Put the connector of the new wiper blade into the slot of the wiper arm. Ensure the wiper blade is properly secured on the wiper arm.

4 Place the wiper assembly back on the windscreen.

Tyres

Overview

Take extra care when using new tyres for the first 300miles (500km).

- Avoid excessive cornering at speed.
- Regularly check tyres for signs of damage. DO NOT remove foreign objects such as screws or nails from the tyre. If a tyre shows any signs of damage please ensure it is inspected by a reputable tyre fitter for advice.
- Prevent tyres coming into contact with any chemicals such as oil, grease or fuel.
- Ensure valve caps are always fitted.
- If the tyre is to be removed always mark the tyre/wheel orientation to ensure correct reinstallation.
- If removed tyres are to be stored, please ensure they are kept in dark, dry and cool conditions.

New Tyres New tyres may not have the same adhesion properties of the old tyres, please run in at moderate speed using a careful driving style for the first 300 miles (500km). This action could benefit tyre life. The damage of a tyre or rim may happen unnoticed. If abnormal vibration or handling is experienced, that means the tyre or rim may have been damaged. Please slow down and park your vehicle in a suitable, safe location, then check the tyre and rim. If you can't see the damage from the outside continue to drive the vehicle slowly to a reputable tyre fitter or MG Authorised Repairer for inspection andadvice.

Tyres with Directional Tread Patterns

Directional tyres are marked with 'direction of rotation' (DOR). To maintain handling characteristics, tyreperformance, low road noise and extend tyre life, tyres must always be fitted with indication arrow showing the correct 'DOR'.

Service Life of Tyres

Correct tyre pressures and a moderate driving style can extend tyre life. Recommendations during use are as follows:

- Check the tyre pressures at least once a month, it should be carried out when the tyre is cold;
- Avoid cornering at excessive speeds;
- Regularly check tyres for abnormal wear patterns.
- If the vehicle is to be stored for a lengthy time, pleasemove your vehicle at least once every two weeks to'rotate the tyres'.

The following factors affect the tyre life:

Tyre Pressure

Over or under-inflated tyres will cause the abnormal wear of the tyre, greatly shorten the service life, and have an adverse effect on the driving characteristics of the vehicle.

Driving Style

Fast driving, excessively harsh acceleration and braking whilst cornering will increase the tyre wear.

Wheel Dynamic Balance

Every new vehicle leaves the factory having had the wheelsdynamically balanced. Out of balance wheels may be dueto many factors.If wheels are out of balance, shaking or vibration of thesteering mechanism may occur and the tyres may start towear excessively. It is important to restore wheel balanceas quick as possible. Each wheel should be rebalanced afterinstalling a new tyre or having a tyre repair.

Wheel Alignment Defect

Incorrect wheel alignment can cause excessive tyre wear and affect vehicle safety. If the tyres show signs of abnormal wear, check the wheel alignment and seek advice from an MG Authorised Repairer.

Tyre Inspection

USE OF DEFECTIVE TYRES IS DANGEROUS! DO NOT drive if any tyre is damaged, excessively worn or inflated to an incorrect pressure.

When replacing tyres it is strongly recommended that the new tyres are of the same specification as the original tyres. DO NOT replace the tyres with tyres of any other type. Alternative tyres, of a different specification, may adversely affect the vehicle's driving characteristics and safety. In order to maintain driving characteristics and safety , it is suggested that you consult an MG Authorised Repairer.

Always drive with consideration for the condition of the tyres, and regularly inspect the tread and side walls for any sign of distortion (bulges), cuts or wear.

Note: Prevent tyres from coming into contact with oil, grease and fuel.

Tyre Pressure

Before a long distance journey, the tyre pressures should be checked.

Check the pressures at least every month, when the tyres are cold.

If it is necessary to check the tyres when they are warm, you should expect the pressures to have increased by 4.4 ~ 5.8 psi (i.e. 0.3 ~ 0.4 bar). In this circumstance, NEVER let air out of the tyres in order to match the recommended pressures (cold) in the technical data.

Valves

Keep the valve caps firmly secured to prevent dirt from entering the valve. Check the valve for leaks (listen for a tell-tale hissing) when you check the tyre pressure.

Punctured Tyres

Your vehicle is fitted with tyres which may not leak if penetrated by a sharp object, provided the object remains in the tyre. If you are aware of this occurring, reduce speed immediately and drive with caution until the spare wheel can be fitted, or repairs undertaken.

Note: If the sidewall of the tyre is damaged or distorted, replace the tyre immediately, do not attempt to repair it.

Tyre Wear Indicators

The tyres fitted as original equipment have 1.6 mm-high wear indicators at their tread pattern bottom, vertical with the wheel rolling direction and evenly distributed around the circumference. The mark on the tyre side such as capital letters TWI or triangular symbol shows the location of wear indicator.

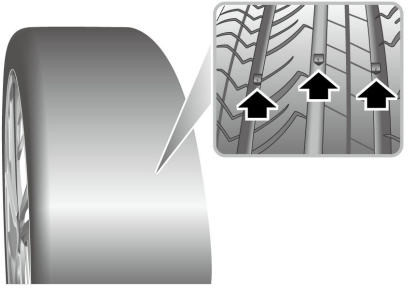

When the tread has worn down to 1.6 mm or below, the indicators will come to the surface of the tread pattern, producing the effect of a continuous band of rubber across the width of the tyre.

IMPORTANT
A tyre MUST be replaced as soon as a wear mark becomes visible. Otherwise there may be a risk of accidents.

Tyre Rotation

It is recommended that you swap wheels at irregular intervals in order to equalise tyre wear.

When the tyres are worn seriously, it is recommended to swap the front and rear wheels as shown in illustration. This can prevent tyres from uneven wear, prolong the life span and balance tyre fatigue.

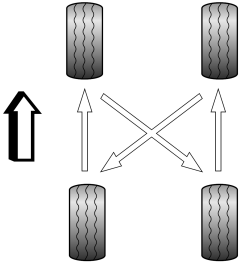

Note: Directional tyres (identified from the arrow on the tyre side) CANNOT be swapped from side to side.

Note: The TPMS self-learning is required after tyre rotation, please consult an MG Authorised Repairer for details.

Snow Chains

Unsuitable snow chains may damage the tyres, wheels, suspension, brakes or bodywork of your vehicle.

Please pay attention to the following requirements in the usage:

- The snow chains can only be fitted on the rear drive wheels;
- The thickness of snow chains shall not exceed 15 mm;
- Please always observe the installation and tension instructions for the snow chains, as well as the speed limitations of different roads;
- Do not drive faster than 31 mph (50 km/h);
- To avoid the tyre damage and excessive wear of the snow chains, the snow chains must be removed while driving on the road without snow.

Size and Specifications of Wheels and Tyres Supporting Snow Chains for This Vehicle	
Wheel Rim Size	17×7.0J
Tyre Size	215/60 R17 100H

Note: Before purchasing snow chains, ensure that the specifications of wheel rim and tyre are consistent with those in the above table to avoid failure to fit the snow chains.

Note: If you often drive on snow covered and icy roads, it is recommended to use winter tyres. Please consult an MG Authorised Repairer for details.

Cleaning and Vehicle Care

Abuse of care products may be harmful to health, care products must be safely stored, especially can't let children contact, or it will have the hazard of poisoning.

Exterior Care

Washing Your Car

ONLY wash your vehicle when it is powered-off as there is a risk of an electrical hazard occurring.

After cleaning your vehicle in winter, moisture or ice in the braking system can reduce braking effectiveness and may pose a risk of accidents.

DO NOT use a high pressure hose to clean the front compartment - damage to the car's electrical systems may occur.

Frequent cleaning and waxing can effectively protect the vehicle against harmful environmental impacts. Some covered areas, for example, doorsill footstep, sealed parts, cover plate, etc. should be cleaned periodically. The time interval of vehicle cleaning depends on many factors. For example:

- Operating frequency;
- Places for vehicle parking and storage, etc.;
- Seasons;
- Climatic conditions;
- Environmental impacts.

The longer the adhesion of insect residue, bird droppings, resin, road dust and industrial dust, asphalt, soot particles, snow melting salt and other erosive sediments to the automotive paint, the greater their adverse effects are. Too high temperature, such as intensive solar radiation, will also intensify the erosion. Therefore, please clean your vehicle according to the actual situation.

After the end of the salt spilling period in winter, be sure to thoroughly clean the bottom of the vehicle once.

Note: It is recommended that any cameras are protected whilst the vehicle is being washed to avoid damage from car wash equipment, brushes or hardobjects.

Automatic Cleaning Equipment

The automotive paint has certain abrasion resistance, so you can clean the vehicle with automatic cleaning equipment in general. In fact, the structure of the cleaning equipment, the filtration of water, and the types of cleaning and curing agents have a certain impact on car paint. Please choose cleaning equipment that is suitable for your car.

Before cleaning, please be sure to lock the doors, close the windows and sunroof*, ask the cleaning equipment operator whether the roof antenna is to be removed; if your vehicle is provided with spoiler, roof rack, radio antenna and other installed parts, you must inform the cleaning equipment operator.

Manual Cleaning

When manually cleaning your vehicle, please carefully choose cleaning agents according to your actual needs and rinse the vehicle with clean water after using the cleaning agents.

IMPORTANT

- Do not wash your vehicle in direct sunlight in hot weather. Wait for the exterior of the vehicle to cool down before cleaning. Otherwise, there is a risk of damaging the paint/external light surface.
- When cleaning the vehicle in winter avoid spraying water directly onto door locks, panel gaps and sunroof seams due to risk of icing.
- Do not use rough sponges or cloth to clean the car, this will damage the paintwork finish.
- When cleaning the lamps do not use a dry cloth or sponge, use a soft microfibre cloth with a small amount of room temperature water/soapy water to clean the lamps.

Cleaning with a high pressure washer

Before cleaning: Please be familiar with the operation instructions and precautions of the high pressure cleaner. Please check and ensure that the front and rear doors, bonnet and tailgate, charging port door (if any), refueling door (if any), flush door handle (if any), etc. of the vehicle are closed.

When cleaning: Be sure to control the spray pressure, and keep a certain distance between the spray nozzle and the area being cleaned, especially soft materials (such as rubber hoses, sound insulation materials, etc.); avoid excessive rinsing of these areas.

After cleaning: It is strongly that advised that you lightly apply the brake pedal several times to remove any moisture on the brake discs so as not to affect the braking effect and avoid the chance of brake disc corrosion. Completely remove the residues from all windows and rearview mirrors, etc. so as not to affect the field of vision.

IMPORTANT

- The soft parts on the vehicle should be kept in a large enough distance from the injection port of the high pressure cleaner.
- High-pressure rinsing may cause damage or peeling off of the stickers on the paint surface.

IMPORTANT

- DO NOT spray the nozzle of the high-pressure cleaner directly into the door cracks, windows, sunroof, bonnet and tailgate, etc.
- DO NOT attempt to flush any open front and rear doors, bonnet and tailgate, small doors, etc.
- DO NOT spray or clean a window glass that is frozen or has been covered with snow.
- DO NOT spray directly onto connectors, seals, tyres, rubber hoses, heat insulation materials or other sensitive vehicle parts (such as small doors, small door locks, door locks, sensors, radars, cameras, etc.), and DO NOT hold a high pressure water jet in one position for a long time.
- DO NOT use a circle beam nozzle or rotary nozzle, especially for the tyres, this may cause damage.

Waxing

A high quality wax layer can effectively protect the automotive paint against harmful environmental impacts and even provide protection against minor hard scratches. If you find that water drops can no longer smoothly roll

down on clean paint, you should recoat the vehicle with a high quality hard wax curing agent. You should apply hard wax at least twice a year to protect the automotive paint even after regular use of wax curing agents for cleaning the vehicle with the automatic cleaning equipment.

Polishing the Paintwork

Polishing is required only when the automotive paint has tarnished and can not return even by waxing.

If the applied polishing agent does not contain waxy composition, you must wax the paint after polishing.Generally, polishes with the following characteristics may be used to treat paint surfaces：

- Very mild abrasives to remove surface stains without removing or damaging the paint.
- Filling compounds that will fill scratches and reduce their visibility.
- Wax to provide a protective layer between the paint and the coating.

Note: DO NOT polish matte painted part or plastic part.

Paint Damage

A small area of paint damage, such as scratches or damages after being struck by stonechips , must be immediately coated with paint to avoid rusting. If rusting has begun, you must remove it thoroughly, then apply anti-corrosive primer to this portion, and finally apply finish.

Matte Paint

Matte paint is a special type of coating that requires special care.

It is recommended to wash the car manually and do not use rough sponges or cloth. Do not use excessive force when cleaning and wiping. Avoid washing the car in direct sunlight.

- Do not use high pressure water jet or steam to clean the vehicle. If the vehicle is quite dirty, a pre-cleaning is required before washing. Use a low pressure water hose to wash off the body dust and other particles that may damage the paint surface first.
- Spray the vehicle body with a large amount of water, and use a soft sponge and neutral wax-free car wash

solution to clean the vehicle from the roof downwards and then dry the vehicle body.

During the daily care of your vehicle, attention should also be paid to:

- If the paint film comes into contact with resin or grease, as well as insect residue or bird excrement, please remove it immediately to avoid irreversible damage to the matte paint surface.
- If there are oil stains or fingerprints on the matte paint surface, immediately remove them with a clean cloth and do not use excessive force to avoid irreversible damage to the matte paint surface.
- To maintain the matte effect of the paint surface, abrasives, polishes, and waxes cannot be used, and the vehicle body cannot be polished.
- Do not use any stickers, posters, magnets, or similar materials, this will prevent damage to the paint surface.
- Be sure to have the paint film repaired in a qualified professional repair workshop.

Wiper Blades

Wash in warm soapy water. DO NOT use spirit or petrol based cleaners.

Windows and Rearview Mirrors

Regularly clean all windows, inside and out, using an approved glass cleaner.

Windscreen: Clean the outside of the windscreen with glass cleaner before fitting new wiper blades.

Rear screen: Clean the inside with a soft cloth, using a side to side motion to avoid damaging the heating elements. DO NOT scrape the glass or use abrasive cleaning compositions – this will damage the heating elements.

Rearview mirrors: Wash with soapy water. DO NOT use abrasive cleaning compositions or metal scraper.

Sunroof (if any): Frequently clean the guide rails on both sides of the sunroof and the front well. If it is a panoramic sunroof, it is necessary to frequently clean the front end of the rear glass (after the front glass is completely opened) to avoid the deposition of dust, sand, leaves and other impurities, so as not to block the drainage hole and lead to poor drainage of the sunroof.

Plastic Parts

Plastic parts can be cleaned by the conventional method of cleaning. When the stain is not easy to remove, you can use a special curing agent for treatment please do not use paint curing agents when treating plastic parts.

Weather Strips

If the weather strips or rubber hole seals have been cleaned with a strong detergent, they should be treated with a suitable material (e.g. silicone), which will prevent sticking and maintain the service life of the seal.

Exterior Lamps

It is recommended to use mild neutral detergent to clean the surface of the lamp. Avoid using organic solvent cleaners containing alcohols, polyhydroxy alcohols and strong polarity (such as foam cleaner, glass cleaner, thinner, deicer, paint treatment agent, etc.), otherwise the surface of the lamp may crack and the lamp may become damaged. During vehicle cleaning or polishing operations, the headlights should be protected.

Wheels

Ensure care is taken when cleaning the wheels as to ensure materials or water do not come into contact with the brakes.

You can prevent braking abrasive dust dirt and snow melting salt from attaching to the wheels by cleaning the wheels. Braking abrasive dust not easy to remove may be cleared with non-acid rim cleaner.

When cleaning the wheels any materials orwater that contact the brake.

Light Alloy Wheels

In order to keep good appearance of the light alloy wheels, regular care is required for it. If snow melting salt and braking abrasive dust are not washed off regularly, the light alloy wheels will be eroded.

Please be sure to use non-acid special cleaner for cleaning. Do not use paint polishing agent or other products containing abrasives for wheel care. If the protective cover of paint has been damaged (such as damages after being stuck by stones), the damaged part shall be immediately repaired.

Protective Bottom Cover

The bottom of the vehicle is coated with a special durable protective material for protection against the effects of chemical and mechanical factors. But we recommend you to inspect the bottom of the vehicle and the protective layer of the chassis on a regular basis since the protective layer can not be protected against damages when the vehicle is in service, and it is preferable to inspect once before the cold season starts and once after it comes to an end.

Interior Care

When applying film or cleaning to the interior of a vehicle, if water, alcohol, or other cleaning agents need to be sprayed, it is necessary to take protective measures (such as placing a cloth or absorbent sponge around the spraying area), and wipe the liquid clean as soon as possible after applying film or cleaning to prevent the liquid from flowing into the vehicle's electrical appliances and causing damage to the vehicle.

Condenser, Radiator and Cooling Fan

During daily driving, the condenser, radiator and cooling fan of the vehicle may accumulate dirt or grime, thereby affecting the correct operation of the A/C system, cooling system or noise. During the routine servicing and cleaning, if any dirt is found, flush with clean water or wipe with a cloth. During cleaning, be careful not to damage the fins or blades and other components of the condenser, radiator and fan.

Vehicle Air Conditioning Cleaning

During the daily use of vehicle Vehicle Air Conditioning, some dirt may accumulate internally that may affect normal operation. Therefore, it is necessary to clean the interior of the A/C regularly. It is recommended to use an MG Authorised Repairer for professional cleaning and sanitisation.

Note: It is recommended to use a small amount of cleaning agent in the form of spray when cleaning the air conditioning to avoid vehicle failure caused by liquid flowing into on-board electrical appliances.

Plastic Parts, Artificial Leather and Fabrics

You can clean plastic parts and artificial leather with a damp cloth. It is only recommended that you wash these parts with the special solvent-free plastic cleaning and curing agent.

Cushions and fabric finishes on the doors, tailgate panel, roof and other points should be cleaned with special cleaner or dry foam using a soft sponge.

Note: DO NOT polish dashboard components – these should remain non-reflective.

Airbag Covers

DO NOT allow these areas to be flooded with liquid and DO NOT use petrol, detergent, furniture cream or polishes.

To prevent damaging airbags, only use one wet cloth and upholstery cleaner to carefully clean the following areas:

- Steering wheel centre pad.
- Area of dashboard containing the passenger airbag.
- Area of roof lining which encloses the side head impact protection airbags.

Seat Belts

DO NOT use bleaches, dyes or cleaning solvents on seat belts.

Extend the belts, then use warm water and a non-detergent soap to clean. Allow the belts to dry naturally. DO NOT retract them or use them until they are completely dry.

Carpet and Fabrics

Before using diluted upholstery cleaner, test a concealed area first. Check if the cleaning agent will damage or dirty the carpet and fabric.

Leather

Due to the specificity and characteristics (such as sensitivity to oil, grease, dirt, etc.) of the leather type used in the vehicle, it is necessary to be thoughtful and detailed for application and care of automotive leather.

For example:

- You might contaminate the leather seats with colours of dark, especially wet garment materials having dyeing problems.
- Any dust and dirt particles invading the leather pore folds and edge joints will wear leather surface.

Therefore, you shall conduct maintenance regularly or according to the use of leather. If in-depth care is required,it is recommended to go to a local Authorised Repairer.

Cleaning method:

1 Dip a white cleaning cloth in clean water, wring it out, gently wipe the leather surface, wipe away the dust, repeat two or three times, open the window for ventilation, and dry it naturally. AVOID exposure to high temperatures or use a hair dryer to dry.

2 If there is any dirt that cannot be removed by clean water, please use a solvent-free leather cleaner or neutral soap to wipe it.

Note: Solvents mainly include: various alcohols, strong acids and bases, amides, oleic acids, gasoline and other solvent-containing substances.

IMPORTANT
• Always clean at room temperature, and the temperature should not exceed 45 °C. • DO NOT use solvent-based cleaners: solvent-based cleaners (including ethanol) will cause colour loss/surface coating damage. • It is recommended to clean immediately after contamination, some stains will be very difficult to remove if left for a long time. • It is recommended to use all-polyurethane sponge for cleaning materials, and DO NOT use magic or wet wipe. It is recommended to choose non-woven fabrics with good water absorption and ethanol-free wipes for cleaning cloths.

Recommended maintenance suggestions:

- Use specialized leather treatments after each cleaning. Nourishing oil can nourish leather, making it flexible, breathable, and restoring moisture, while also establishing a protective layer on its surface.
- Clean the leather every two to three months to promptly remove stains.

Note: DO NOT use petrol, detergents, furniture creams or polishes as cleaning agents.

Instrument Pack and Entertainment Display

Clean only with a soft, dry cloth; do not use cleaning solutions or sprays.

Technical Data

Technical Data Dimensions 338

Complete Vehicle Mass Parameters 339

Parameters of Towing Device 340

Dynamic Performance Parameters 342

Parameters of Drive Motor 343

Parameters of High-voltage BatteryPack 344

Recommended Fluids and Capacities 348

Four-wheel Alignment Parameters (Unladen Condition) 349

Wheels and Tyres 350

Tyre Pressures (Cold) 351

Technical Data Dimensions

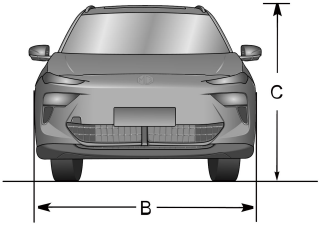

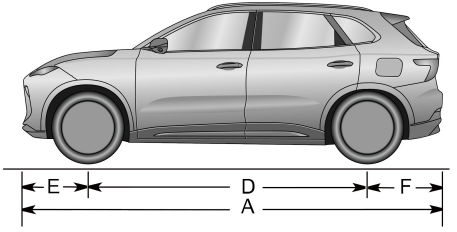

Note: Vehicle length not including the license plate.

Item, units	Parameters
Overall length A , mm	4476
Overall width B , mm	1849
Overall height C , mm	1626,1621,1633
Wheelbase D , mm	2734
Front overhang E , mm	855
Rear overhang F , mm	891
Front wheel track, mm	1554
Rear wheel track, mm	1561
Minimum ground clearance, mm	136,145
Minimum turning circle diameter, m	10.7

Note: Rearview mirrors and the deformed portion of tyre wall directly above the touchdown point are not included in the total width.

Complete Vehicle Mass Parameters

Item, units	Parameters		
	49kWh	62kWh	64kWh
Person in cab, person	5		
Unladen vehicle weight, kg	1635, 1680	1705, 1755	1680, 1725
Gross vehicle weight, kg	2080, 2125	2150, 2200	2125, 2170
Unladen front axle weight, kg	770, 790	805, 825	790, 810
Unladen rear axle weight, kg	865, 890	900, 930	890, 915
Laden front axle weight, kg	890, 910	920, 945	910, 930
Laden rear axle weight, kg	1190, 1215	1230, 1255	1215, 1240

Parameters of Towing Device

Towing Parameters

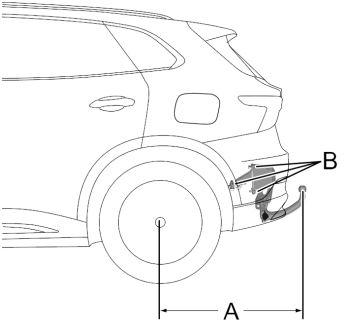

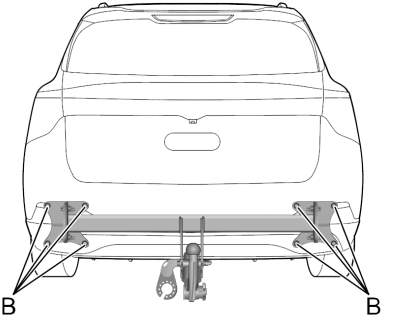

Item, Parameter	Parameter Values
Maximum towing mass (without brakes), kg	750
Maximum towing mass (with brakes), kg	750

Item, Parameter	Parameter Values
Maximum net load at the coupling point, kg	75
Distance from wheel centre to tow hook centre point (A), mm	967
Towing device mounting point	B

Note: When towing a trailer, the vehicle speed MUST not exceed 62 mph (100 km/h).

Note: Prior to towing a trailer, please check the rear tyre pressures, inflate to at least 20 kPa (0.2 bar) above the recommended pressure - DO NOT allow the tyre pressure to exceed 300 kPa (3.0 bar), this can be dangerous.

Dynamic Performance Parameters

Item, units	Parameters	
	49kWh/62kWh	64kWh
Maximum speed (UK)	102mph (164km/h)	
Maximum speed (excluding UK)	170km/h	190km/h
Gradeability, %	30	

Note: The dynamic performance parameters are test data under specific conditions.

Note: Gradeability is affected by different road surfaces, tyre pressures, tyre tread depth and vehicle load.

Parameters of Drive Motor

Item, units	49/62kWh	64kWh
Motor type	Three-phase permanent magnet synchronous motor	
Rated power/peak power, kw	54/125	84/170
	54/99(SGP)	
Peak torque, Nm	250	350
Rated speed/Max. speed, rpm	8000/17000	8000/17000
IP rating	IP67	IP67

Parameters of High-voltage BatteryPack

Battery pack type 1 (49kWh)

Parameters	Value	
Battery type (model)	**BU156A49S**	
Capacity (Ah)	156@1C@25℃	
Capacity attenuation (%)	10@700cycle@25℃	
Power (W)	SOC	BOL discharge power(W)@10s@25℃
	80%SOC	180000
	20%SOC	119430
Power attenuation (%)	10@700cycle@25℃	
Internal impedance (Ω)	SOC	BOL discharge DCR(Ω)@4C@10s@25℃
	50%	0.07
Increase of internal impedance	16@700cycle@25℃	

Energy conversion rate (%)	95@25°C
Energy loss rate (%)	3.5@700cycle@25°C
Cycle life	2500cycle@70%SOHe@25°C
Calendar life	18year@70%SOHe@25°C

Battery pack type 2 (62.2kWh)

Parameters	Value	
Battery type (model)	**BU156A62S**	
Capacity (Ah)	183@1C@25°C	
Capacity attenuation (%)	10@630cycle@25°C	
Power (W)	SOC	BOL discharge power(W)@10s@25°C
	80%SOC	233280
	20%SOC	157367
Power attenuation (%)	10@630cycle@25°C	

Internal impedance (Ω)	SOC	BOL discharge DCR(Ω)@4C@10s@25°C
	50%	0.07
Increase of internal impedance	16@630cycle@25°C	
Energy conversion rate (%)	95@25°C	
Energy loss rate (%)	3.5@630cycle@25°C	
Cycle life	2500cycle@70%SOHe@25°C	
Calendar life	18year@70%SOHe@25°C	

Battery pack type 3 (64kWh)

Parameters	Value
Battery type (model)	**EU169A64S**
Capacity (Ah)	169.5@1C@25°C
Capacity attenuation (%)	10@700cycle@25°C

Power (W)	SOC	BOL discharge power(W)@10s@25℃
	80%SOC	283140
	20%SOC	197496
Power attenuation (%)	10@770cycle@25℃	
Internal impedance (Ω)	SOC	BOL discharge DCR(Ω)@4C@10s@25℃
	50%	0.062
Increase of internal impedance	19@770cycle@25℃	
Energy conversion rate (%)	96@25℃	
Energy loss rate (%)	3@770cycle@25℃	
Cycle life	1500cycle@80%SOHe@25℃	
Calendar life	16year@70%SOHe@25℃	

Recommended Fluids and Capacities

Name	Grade	Capacity
High-voltage battery pack coolant, L	Glycol (OAT)	4.2
Electric drive unit coolant, L		5.8
Electric drive unit fluid (170kW), L	Shell E-Fluids E6 iX (SL2808)	0.9
Electric drive unit fluid (125kW/99kW), L		0.85
Brake fluid, L	DOT 4	0.8
Washer fluid, L	Proprietary Screenwasher Fluid	2.5
A/C refrigerant	HFC-1234yf* Containing fluorinated greenhouse gases	0.58±0.02 kg
		GWP 0.501
		CO_2 eq 0.0003t
A/C refrigerant	R-134a*	580±20 g

Four-wheel Alignment Parameters (Unladen Condition)

Item, units		Parameters
Front Wheel	Camber angle	-12¢±45¢
	Castor angle	6°45¢±45¢
	Toe-in	6¢±15¢
	King pin inclination	12°45¢±45¢
Rear Wheel	Camber angle	-1°00'±45'
	Toe-in	12¢±15¢

Wheels and Tyres

Wheel Rim Size	17×7.0J	18×7.0J
Tyre Size	215/60 R17 100H	225/55 R18 102V

Tyre Pressures (Cold)

Wheels	Half-load	Laden
Front Wheel	250kPa/2.5bar/37psi	250kPa/2.5bar/37psi
Rear Wheel	250kPa/2.5bar/37psi	250kPa/2.5bar/37psi