Thank you for choosing Volkswagen

By purchasing this Volkswagen, you have become the owner of a vehicle fitted with the most up-to-date technology and a multitude of convenience functions for your use and enjoyment.

Before using your vehicle for the first time, please read and observe the information in this owner's manual. It will quickly help you to become familiar with your vehicle and all of its functions as well as making you aware of dangers to yourself and others and of how these dangers can be avoided.

If you have any further questions about your vehicle, or if you think that the vehicle wallet has not covered everything, please get in tap with your authorised Volkswagen repairer. They will always be happy to deal with your questions, suggestions or problems.

We hope you enjoy driving your new vehicle. Happy motoring.

WARNING

Observe the important safety instructions for use of child restraint systems on the front passenger seat. *(→ Child seats)*

About this owner's manual

This owner's manual is valid for all variants and versions of your Volkswagen model and model year. The owner's manual describes all equipment and models without indicating whether the equipment is optional or specific to the model type. This means that your vehicle may not have some of the equipment described, or it may only be available in certain countries.

There may also be descriptions of upgrades for functions that require subsequent activation .

For information on your actual vehicle equipment, please refer to the sales documents or contact a suitably qualified workshop. Volkswagen recommends using an authorised Volkswagen repairer.

A passenger car is described in this owner's manual.

Depending on the market-dependent vehicle approval, the model version may also be a light commercial vehicle.

All data in this owner's manual corresponds to the information available at the time of going to print. Because the vehicle is constantly being developed and further improved, there may be differences between your vehicle and the data in this owner's manual. No discrepancy in data, illustrations or descriptions shall form the basis for any legal claim.

Due to legal and technical requirements, the vehicle may be equipped with different variants of an owner's manual depending on country.

readme

The vehicle may be equipped with a printed readme document instead of a full printed owner's manual. The readme document provides an overview of basic safety topics and contains information on the vehicle.

Words and groups of words in the readme document that are marked in blue are key words under which you can find further, more detailed information in the Digital Manual (**Vehicle wallet**).

The readme document is supplemented by a Digital Manual in the Infotainment system that can be updated online.

Digital Manual

Depending on equipment, the vehicle may be equipped with a Digital Manual in the Infotainment system.

The Digital Manual describes the functions of the vehicle at the time of delivery. The Digital Manual may be updated by updates, supplements and changes during the service life of the vehicle.

Printed owner's manual

The printed owner's manual describes the functions of the vehicle at the time of going to print. Additions and changes to the owner's manual may also be enclosed as a supplement.

An alphabetical index and a list of abbreviations that explains technical abbreviations and terms help you to find your way around and understand the printed owner's manual.

If you sell or lend the vehicle to someone else, make sure that the printed documents are always in the vehicle. Volkswagen also recommends restoring the Infotainment system to the factory settings in order to delete all personal data.

Explanations

Short definitions in a contrasting colour that precede some sections provide a summary of the respective topic. More detailed information about the features, conditions and limitations of systems and equipment can be found in the relevant sections.

Formulations and terminology used in the owner's manual are explained below to permit easier understanding.

Directions and positions

Directions and positions such as left, right, front and rear are normally relative to the vehicle's direction of travel, unless otherwise indicated.

Dimensions and speeds

Values given in miles instead of kilometres or mph instead km/h refer to the country-specific instrument clusters or Infotainment systems.

Illustrations

Illustrations help with orientation and should be regarded as a general guide. The illustrations may differ from your vehicle.

This owner's manual was written for left-hand drive vehicles. In *right-hand drive vehicles* the controls may sometimes differ from those displayed in illustrations or described in the text.

Form of address

For better legibility, the male form of address is used. However, this refers to all genders equally. The shortened linguistic form is used for editorial reasons and does not represent a value judgement.

Terms used and their meaning:

Glass roof

The term glass roof is used as a standard term for all equipment-dependent versions of the sliding, tilting or panoramic roof.

Qualified workshop

Qualified workshops are workshops that employ instructed or trained personnel and that specialise in performing service work on passenger cars. A qualified workshop can be both a Volkswagen dealership and also an independent workshop.

Volkswagen dealership

Volkswagen dealerships are workshops that have a contractual relationship with Volkswagen. The contractual relationship means that additional information is available, and there is also a direct communication channel to the manufacturer.

Go to a qualified workshop

In some situations, it is necessary for you to drive your vehicle to a qualified workshop to have it checked.

Seek expert assistance

If it should not be possible to continue driving the vehicle at any time, it is necessary to have the vehicle checked by an expert on the spot. A decision on whether it is possible to continue driving or whether the vehicle has to be towed must be taken after this depending on the situation.

Description of symbols

Refers to a section within a chapter that contains important information and safety notes ⚠ that should always be observed.

◁ Indicates the end of a section.

Indicates situations in which the vehicle must be stopped as quickly as possible.

TM The symbol means “Trademark” and identifies an recognised but not (yet) officially registered mark. However, the absence of this symbol does not constitute a waiver of the rights concerning any term.

® The symbol means “Registered Trademark” and identifies a registered mark. However, the absence of this symbol does not constitute a waiver of the rights concerning any term.

→⚠ →⚠ →⚠ Symbols like these refer you to warnings within the same section or on a given page. They draw your attention to possible risks of accident or injury and explain how they can be avoided.

→ⓘ Cross reference to potential risks of damage to property in the same section or on the page specified.

DANGER

Texts with this symbol indicate dangerous situations which will lead to fatal or severe injuries if you do not observe the warning.

WARNING

Texts with this symbol indicate dangerous situations which could lead to fatal or severe injuries if you do not observe the warning.

CAUTION

Texts with this symbol indicate dangerous situations which could lead to slight or medium injuries if you do not observe the warning.

NOTICE

Texts with this symbol indicate situations which could cause vehicle damage if you do not observe the warning.

Texts with this symbol contain additional information on the protection of the environment.

Texts with this symbol contain additional information.

Front view

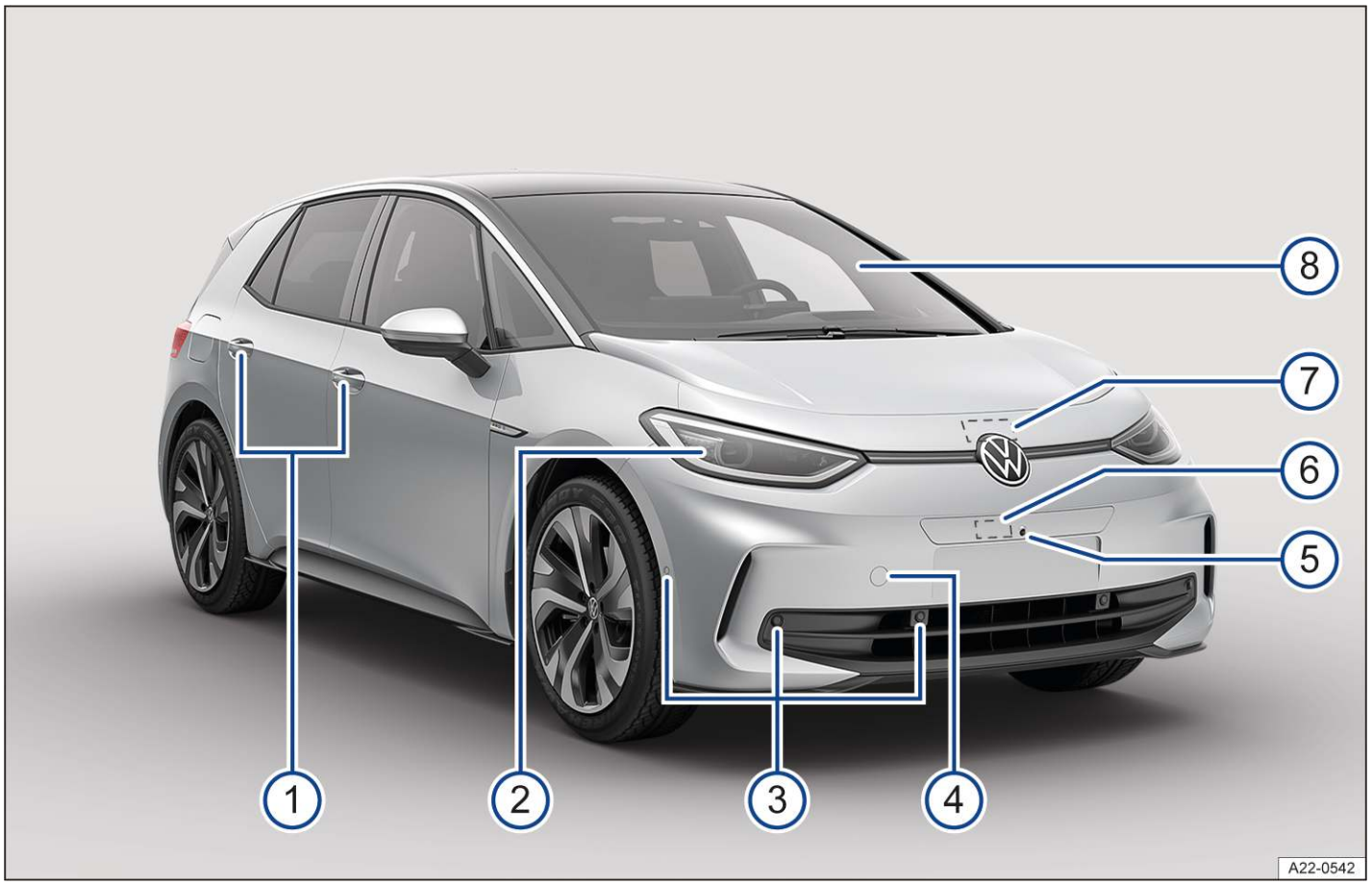

Fig. 1 Overview of vehicle from front.

1. Door handles
2. Headlights
3. Sensors for assist systems , *(→ Vehicle care, exterior)*
4. Behind a cover: mounting for towing eye
5. Camera for assist systems , *(→ Vehicle care, exterior)*
6. Behind a cover: radar sensor for assist systems , *(→ Vehicle care, exterior)*
7. Opening lever for bonnet *(→ In the bonnet space)*
8. Windscreen:
   - with vehicle identification number
   - with windscreen wiper *(→ Wipers)*
   - with camera for assistance systems positioned near the interior mirror , *(→ Vehicle care, exterior)*
   - with rain/light sensor positioned near the interior mirror *(→ Rain and light sensor)*, *(→ Vehicle care, exterior)*

Rear view

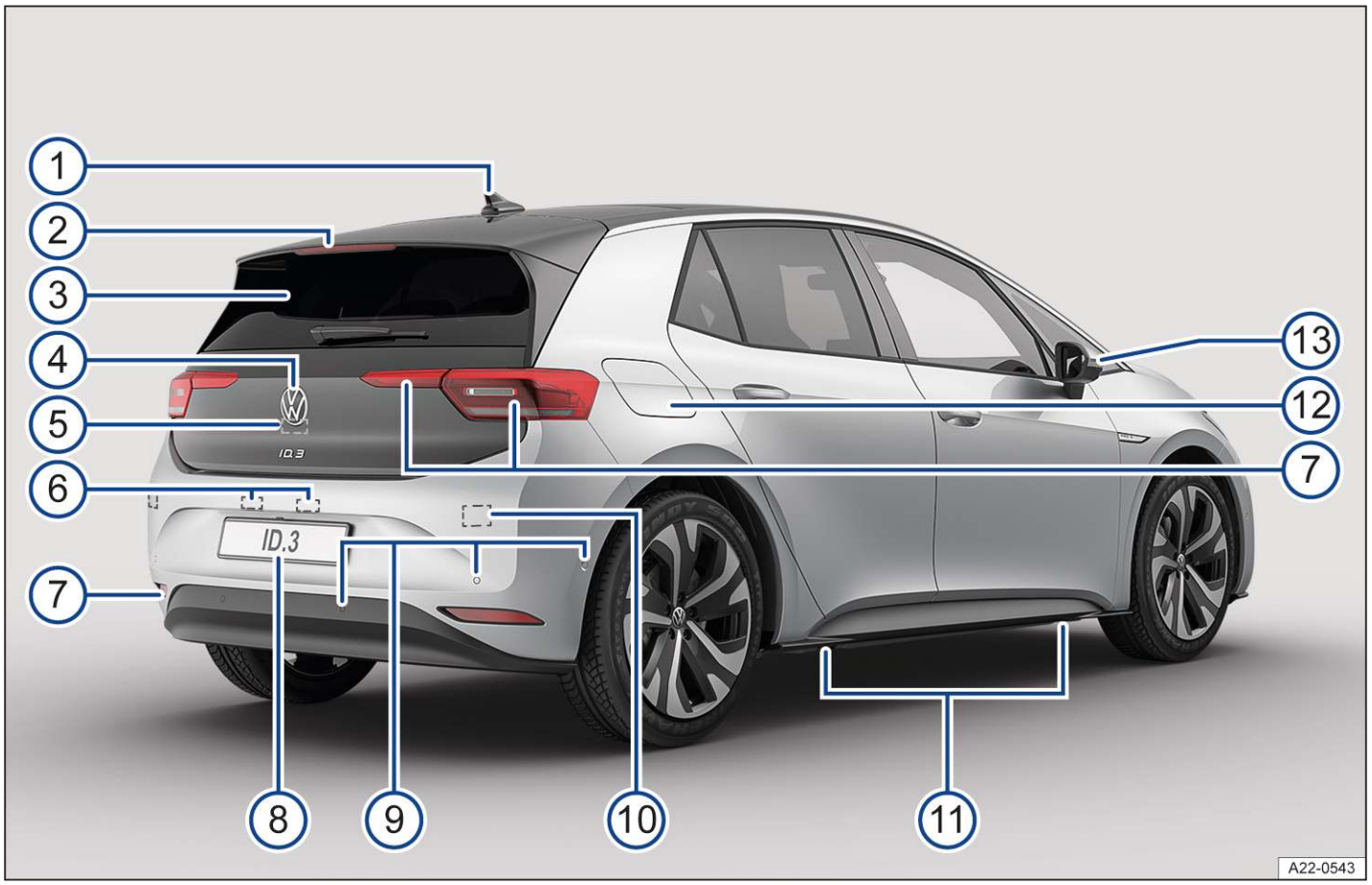

Fig. 1 Overview of vehicle from rear.

1. Roof aerial *(→ Radio reception and aerials)*
2. High-level brake light
3. Rear window:
   - with rear window heating *(→ Rear window heating)*
   - with rear window wiper *(→ Wipers)*
   - with window aerial *(→ Radio reception and aerials)*
4. Volkswagen badge for opening the boot lid
5. Camera area for parking systems , *(→ Vehicle care, exterior)*
6. Number plate light
7. Tail light clusters and reflectors
8. Behind the hinged number plate holder: bicycle carrier preparation *(→ Provision for bicycle carrier)*
9. Sensors for assist systems , *(→ Vehicle care, exterior)*
10. Behind the bumper: radar sensor for assist systems , *(→ Vehicle care, exterior)*
11. Jacking points
12. Charging socket flap *(→ Charging operations)*
13. Exterior mirrors *(→ Exterior mirrors)*
    - With display of lane change system (Side Assist) *(→ Lane change system (Side Assist))*

Driver side

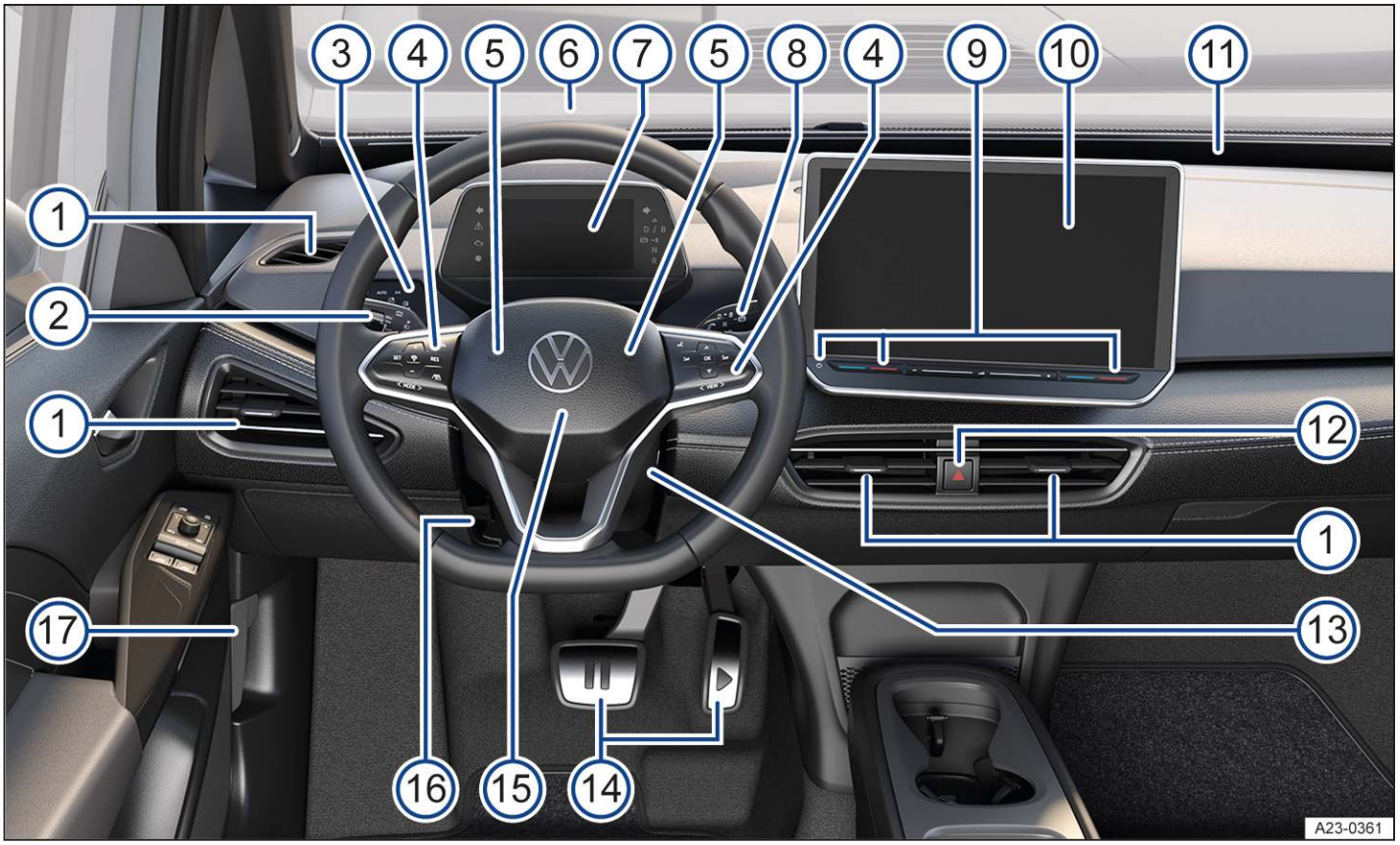

Fig. 1 Overview of the driver side (left-hand drive vehicles).

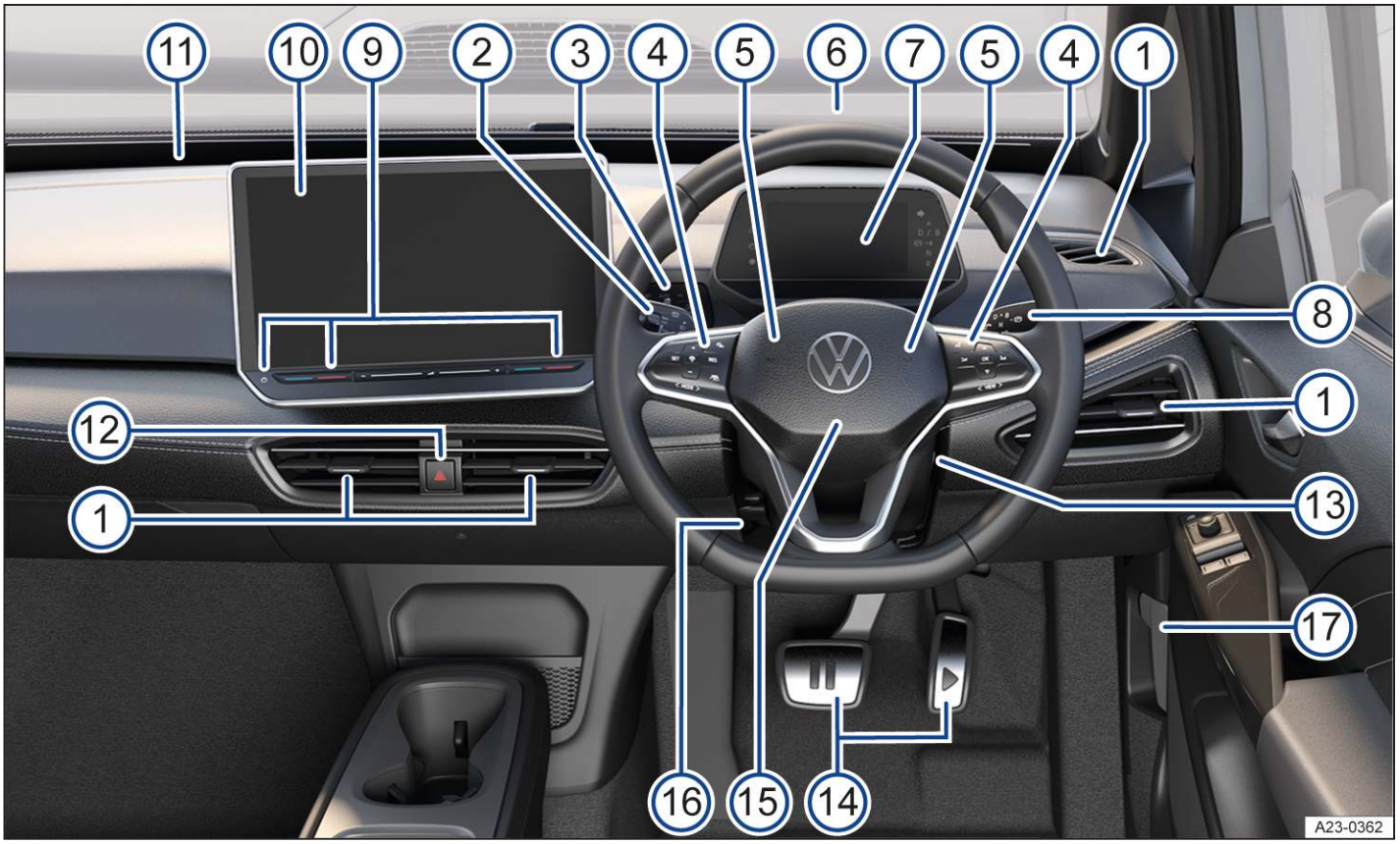

Fig. 2 Overview of the driver side (right-hand drive vehicles).

1 Vents *(→ Air distribution of the air conditioning system)*

2 Turn signal, main beam and wiper lever *(→ Turn signals)*, *(→ Main beam)*

3 Touch controls

— for light functions

— for window heating and ventilation *(→ Rear window heating)*, *(→ Air distribution of the air conditioning system)*

4 Touch controls of the multifunction steering wheel

— for driver assist systems

— for audio and navigation

— for accepting telephone calls OK

— for volume adjustment

— for activating voice control (function may not be available depending on vehicle equipment)

— for switching between the views of the ID. Cockpit 〈VIEW〉 *(→ Digital instrument cluster (Pro))*

5 Horn

6 Head-up display *(→ Head-up display)*

7 ID. Cockpit *(→ Digital instrument cluster (Pro))*

— with warning and indicator lamps and display of the engaged gear selector position *(→ Symbols in the instrument cluster)*

8 Driving mode selector

— with button for electronic parking brake

9 Touch controls

— for switching the Infotainment system on and off *(→ Introduction to the Infotainment system)*

— for temperature settings of the air conditioning system

— for volume adjustment

10 Infotainment system

11 ID. Light (light strip between windscreen and dash panel) *(→ ID. Light)*

12 Touch control for switching the hazard warning lights on and off

13 Starter button *(→ Starter button)*

14 Pedals *(→ Pedals)*

15 Location of the driver front airbag

16 Lever for adjusting the steering column position

17 Release lever for bonnet *(→ In the bonnet space)*

Driver door

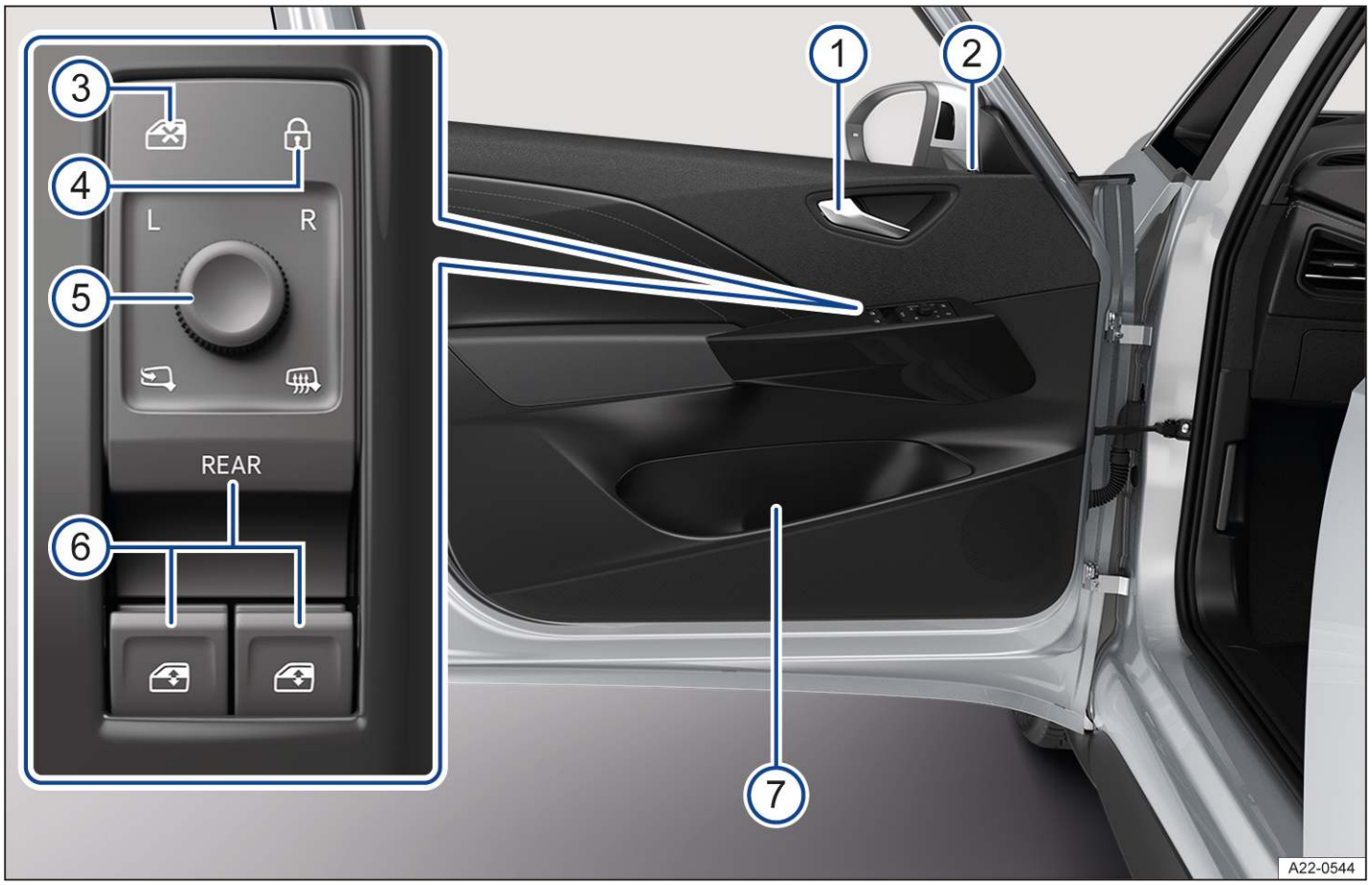

Fig. 1 Driver door (left-hand drive vehicles): controls (mirrored for right-hand drive vehicles).

1. Door release lever
2. Central locking system indicator lamp *(→ Indicator lamp in the driver door)*
3. Touch control for deactivating the rear electric window buttons
4. Touch control for locking and unlocking the vehicle *(→ Central locking button)*
5. Rotary knob for exterior mirror settings and functions *(→ Exterior mirrors)*
6. Buttons for operating the electric windows
7. Stowage compartment
   - with bottle holder
   - with stowage facility for high-visibility waistcoat *(→ Emergency equipment)*

Centre console

Fig. 1 Overview of the lower section of the centre console.

1. Stowage compartment
2. Stowage compartment
   - with drink holder
   - with contact area for the vehicle key for emergency start *(→ Starting the engine)*
3. Stowage compartment
4. Stowage compartment
   - with phone interface *(→ Mobile phone interface)*
   - with function for wireless charging in accordance with QI standard *(→ Charging options for mobile devices)*
5. Under a cover: stowage compartment
   - with USB connections with charging function for external device batteries , *(→ Charging options for mobile devices)*

Front passenger side

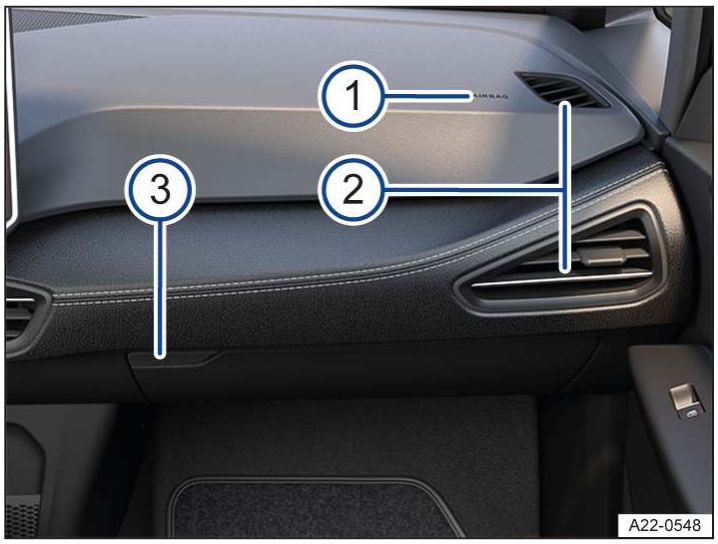

Fig. 1 Front passenger side (left-hand drive vehicles): overview of dash panel (mirrored for right-hand drive vehicles).

Fig. 2 With open front passenger door (left-hand drive vehicles): key-operated switch in the dash panel (mirrored for right-hand drive vehicles).

1. Location of front passenger front airbag in the dash panel
2. Vents *(→ Air distribution of the air conditioning system)*
3. Glove box:

   — with button for opening
4. Key switch for deactivating the front passenger front airbag

Controls and displays in the roof console

OFF Touch control for interior light .

Touch control for interior light .

Touch control for controlling the sliding headliner *(→ Sun blind in the glass roof)*.

SOS Buttons and touch controls for information call, breakdown call and emergency call .

ON Indicator lamp for enabled front passenger front airbag .

OFF Indicator lamp for disabled front passenger front airbag .

Symbols in the instrument cluster

The warning and indicator lamps can light up individually or in combination and indicate warnings, faults or certain functions. Some warning and indicator lamps light up when the ignition is switched on and should go out after a while.

You can find information on other indicator lamps, e.g. in switches or touch panels, in the respective chapters.

WARNING

Failure to observe illuminated warning lamps and text messages can lead to your vehicle breaking down in traffic and can cause accidents, serious injury and even death.

- Never ignore any illuminated warning lamps or text messages.
- Stop the vehicle as soon as possible and when safe to do so.

Due to ongoing vehicle enhancement, the listed warning and indicator lamps may differ in their appearance in the vehicle after an update.

Symbol	Meaning
	STOP Do not drive on! Central warning lamp → *Priority 1 warning*
	Fastening the seat belt → *Seat belt warning system*
	Electronic parking brake switched on → *Electronic parking brake*
	Holding force of the electronic parking brake is insufficient → *Electronic parking brake*
	Button for the electronic parking brake is faulty. → */ Button for the electronic parking brake faulty*
	Electronic parking brake fault → *and / Electronic parking brake fault*
	STOP Do not drive on! Electronic parking brake fault → *and / Electronic parking brake fault*
	STOP Do not drive on! Brake system fault → *Brake system fault*
	STOP Do not drive on! Low brake fluid level → *Brake fluid level*
	STOP Do not drive on! Electromechanical brake servo failed → *Electromechanical brake servo failure*
	Take over brake pedal after automatic brake intervention → *Automatic braking intervention*
	Take over control of the vehicle and be prepared to brake. → *Introduction to the topic*
	STOP Do not drive on! Coolant system fault → *Coolant level*, → *together with Electric drive overheated*
	STOP Do not drive on! Steering fault → *Steering fault*
	STOP Leave vehicle! Danger of fire → *and Danger of high-voltage battery fire*

	Do not drive on! Fault in electric drive system → *Towing the vehicle with another vehicle*
	Do not drive on! Fault in engine management system → *Fault in engine management system*
	Do not drive on! Fault in high-voltage system → *Fault in high-voltage system*
	Do not drive on! Electric drive overheated → *Electric drive overheated*
	Do not drive on! Fault in the 12-volt power supply → *12-volt power supply*
	Only manoeuvring is still possible → *Only manoeuvring is still possible*
	Health risk! Open windows! CO2 concentration too high → *or CO2 concentration in the vehicle interior air too high*
	Collision warning → *Warning levels and braking intervention*
	Take over steering immediately → *Take over steering immediately*
SOS	Emergency Assist performing control intervention, adaptive lane guidance active → *Driving with Emergency Assist*
SOS	Emergency Assist performing control intervention, adaptive lane guidance passive → *Driving with Emergency Assist*
	Intervention by proactive occupant protection system → *Introduction to the topic*
	End of traffic jam ahead → *Traffic hazard alert*
	Assist system intervention in the vehicle ahead → *Traffic hazard alert*
	Accident ahead → *Traffic hazard alert*
	Emergency vehicle on active call → *Traffic hazard alert*
	Wrong-way driver → *Traffic hazard alert*
	Restricted visibility → *Traffic hazard alert*
	Increasing distraction detected → *Warning levels of the Driver Attention Monitor*
	Acute risk for traffic → *Warning levels of the Driver Attention Monitor*
	High level of fatigue detected → *Warning levels of the Drowsiness Monitor*
	Acute risk for traffic → *Warning levels of the Drowsiness Monitor*
	Central warning lamp → *Priority 2 warning*
	Airbag system or belt tensioner systems switched off with diagnostic tool → *Indicator lamp*
	Fault in airbag or belt tensioner systems → *Indicator lamp*

	Functional check of the airbag indicator lamp → *Indicator lamp*
	Proactive occupant protection system functions restricted or not available → *Troubleshooting*
OFF	Front passenger front airbag switched off → *Switching the front passenger front airbag on and off*
ON	Front passenger front airbag switched on → *Switching the front passenger front airbag on and off*
SOS	Emergency call system operation restricted → *Legally required eCall Emergency System restricted*
	Fault in the emergency call system → *Fault in legally required eCall Emergency System*
	Emergency Call Service is restricted → *Emergency Call Service is restricted*
	Emergency Call Service is faulty → *Emergency Call Service is faulty*
	Electronic parking brake fault → *and / Electronic parking brake fault*
	Electromechanical brake servo fault → *Electromechanical brake servo fault*
	Check the brake pads → *Brake pad wear indicator*
	Brakes too hot → *and Brakes too hot*
	Electronic Stability Control (ESC) performing control intervention → *Information on brake support systems*
	Traction control system (TCS) performing control intervention → *Information on brake support systems*
	Electronic Stability Control (ESC) fault → *and No recuperation possible*, → *ESC fault*
OFF	ESC Sport switched on → *Switching a brake support system off and on*
ABS	Fault in anti-lock brake system (ABS) → *Anti-lock brake system failure or fault*
	Semi-automated driving assistance (Travel Assist) not available → *Travel Assist is not available or does not function as expected*
	Assisted lane changing not available → *Assisted lane changing not available*
	Vehicle lighting fault → *Exterior drive lighting not working*
	Rear fog light switched on → *Switching the rear fog light on and off*
	Air conditioning system not working correctly or CO2 concentration cannot be measured → *Air conditioning system not working correctly or CO2 concentration cannot be measured*
	Health risk! Open windows! CO2 concentration too high → *or CO2 concentration in the vehicle interior air too high*
	Fault in rain and light sensor → *Fault in rain and light sensor*, → *Fault in rain and light sensor*
	Fault in wipers → *Fault in wipers*
	Washer fluid level too low → *Washer fluid level too low*
	Fault in steering → *Steering fault*
	Low tyre pressure → *Low tyre pressure*
	Tyre pressure monitoring system fault → *Fault in the Tyre Pressure Loss Indicator*
	High-voltage system fault → *and No recuperation possible*, → *Fault in high-voltage system*
	Power restricted. → *Power restricted*

	Fault with the electronic engine sound. → *Electronic engine sound is not working*
	No or restricted sensor visibility of the driver assist systems → *No or restricted sensor visibility in forward direction*
	Automatic Emergency Braking (Front Assist) not available → *Front Assist not available or functions restricted*
OFF	Lane keeping system (Lane Assist) switched off → *Driving with Lane Assist*
OFF	Automatic Emergency Braking (Front Assist) switched off → *Operating Front Assist*
LIM	Speed limiter not available → *Speed limiter not available*
	Cruise control system not available → *Cruise control system not available*
	Adaptive Cruise Control (ACC) not available → *ACC not available*
SOS	Emergency Assist not available → *Emergency Assist not available*
	Lane keeping system (Lane Assist) not available → *Lane Assist not available*
	Lane keeping system (Lane Assist) is performing control intervention → *Driving with Lane Assist*
	Fault in the lane change system (Side Assist) → *Side Assist fault*
	Exit warning system fault → *Fault in exit warning system or Rear Traffic Alert*
	Charge level of the 12-volt vehicle battery is insufficient → *12-volt vehicle battery charge level*
	Fault in 12-volt power supply → *12-volt power supply*
	Charge level of the high-voltage battery low → *Charge level of the high-voltage battery low*
	High-voltage battery empty, total discharge possible → *High-voltage battery is empty and total discharge is possible*
	Range calculation fault → *Fault in range calculation*
	Adaptive chassis control fault → *Fault in adaptive chassis control (DCC)*
	Vehicle key not in vehicle → *No valid vehicle key recognised*
	Rear Traffic Alert fault → *Fault in exit warning system or Rear Traffic Alert*
	Drowsiness Monitor not available → *Drowsiness Monitor not available*
	Driver Attention Monitor not available → *Driver Attention Monitor is not available*
	Advanced Road Sign Display is not available → *Advanced Road Sign Display is not available*
	End of traffic jam ahead → *Traffic hazard alert*
	Accident ahead → *Traffic hazard alert*
	Road works ahead → *Traffic hazard alert*
	Emergency vehicle on active call → *Traffic hazard alert*
	Stationary vehicle or breakdown ahead → *Traffic hazard alert*
	Animals on the road → *Traffic hazard alert*
	Restricted visibility → *Traffic hazard alert*

	Obstacles on the road → *Traffic hazard alert*
	Persons on the road → *Traffic hazard alert*
	Slow vehicle ahead → *Traffic hazard alert*
	Strong winds → *Traffic hazard alert*
	Slippery road → *Traffic hazard alert*
HOLD	Auto Hold function active → *Auto Hold function*
	Turn signals → *Turn signal indicator lamp*
	High-voltage battery is being charged → *Charging*
READY	Vehicle's drive system → *Power display*, → *Activating the vehicle's drive system*
	Cruise control system switched on, control active. → *Introduction to the topic*
LIM	Speed limiter switched on, system control active → *Introduction to the topic*
	Lane keeping system (Lane Assist) ready to perform control interventions → *Driving with Lane Assist*
	Travel Assist active → *Introduction to the topic*
	The ACC is regulating, no vehicle detected in front → *Switching the ACC on and off*
	The ACC is regulating, vehicle in front detected → *Switching the ACC on and off*
	Speed regulation due to a left-hand bend → *Driving with predictive cruise control*
	Speed regulation due to a right-hand bend → *Driving with predictive cruise control*
	Speed regulation due to a roundabout → *Driving with predictive cruise control*
	Speed regulation due to a junction → *Driving with predictive cruise control*
	Speed regulation due to lifting of the speed limit → *Driving with predictive cruise control*
	Speed regulation due to approaching the tail end of a traffic jam → *Driving with predictive cruise control*
	Main beam or headlight flasher → *Switching main beam on and off*
	Main-beam control switched on → *Switching on Light Assist*, → *Switching on Dynamic Light Assist*
HOLD	Auto Hold function switched on → *Auto Hold function*
	Cruise control switched on, system control not active. → *Introduction to the topic*
LIM	Speed limiter switched on, system control not active. → *Introduction to the topic*
	The Adaptive Cruise Control (ACC) is not performing a control intervention, vehicle detected ahead → *Switching the ACC on and off*
	The Adaptive Cruise Control (ACC) is not performing a control intervention, no vehicle detected ahead → *Switching the ACC on and off*
	Lane keeping system (Lane Assist) not ready to perform control interventions → *Driving with Lane Assist*
	Travel Assist passive, Adaptive Cruise Control active, adaptive lane guidance passive → *Introduction to the topic*
	Semi-automated driving assistance (Travel Assist) deactivated → *Introduction to the topic*

	Charge level of high-voltage battery → *Charge level and range in the digital instrument cluster*
	Outside temperature is below +4 °C (+39 °F) → *Digital instrument cluster information displays*
	Service due → *Service interval display*
	Fatigue detected → *Warning levels of the Drowsiness Monitor*
	Driver inattentive → *Warning levels of the Driver Attention Monitor*
OFF	Advanced Road Sign Display partially deactivated → *Advanced Road Sign Display is partially deactivated*
	Assisted lane changing switched on, lane change not possible → *Using assisted lane changing*
	Assisted lane changing switched on, lane change possible → *Using assisted lane changing*
	Assisted lane changing switched on, lane change taking place → *Using assisted lane changing*
	Main-beam control (Light Assist) active → *Main-beam control (Light Assist)*, → *Advanced main-beam control (Dynamic Light Assist)*
	Take over steering → *Take over steering*
	Charging connector connected → *Charging*
	Automatic Emergency Braking (Front Assist) is starting up → *Front Assist is starting up*
	Distance warning → *Warning levels and braking intervention*
	Eco driving profile → *Characteristics of the driving profiles*
	Comfort driving profile → *Characteristics of the driving profiles*
	Sport driving profile → *Characteristics of the driving profiles*
	Individual driving profile → *Characteristics of the driving profiles*
	Note about information in the owner's manual → *Note about information in the owner's manual*
	Direction from which the emergency services vehicle is approaching → *Traffic hazard alert*
	Take foot off accelerator → *Eco Assistance*
	Motorway exit ahead → *Eco Assistance*
	Roundabout ahead → *Eco Assistance*, → *Driving with predictive cruise control*
	Junction ahead → *Eco Assistance*, → *Driving with predictive cruise control*
	Left-hand bend ahead → *Eco Assistance*, → *Driving with predictive cruise control*
	Right-hand bend ahead → *Eco Assistance*, → *Driving with predictive cruise control*
	End of traffic jam ahead → *Driving with predictive cruise control*
30	Speed limit ahead, example → *Driving with the predictive speed limiter*, → *Eco Assistance*, → *Driving with predictive cruise control*
30	Detected speed limit adopted, example → *Driving with the predictive speed limiter*, → *Driving with predictive cruise control*
	Lifting of a speed limit ahead → *Driving with predictive cruise control*
	Vehicle ahead → *Eco Assistance*

	Steering wheel heating → *Steering wheel heating*
	Emergency charging of the high-voltage battery → *Emergency charging of the high-voltage battery*
	Rear seat warning muted → *Parking*

Warning and information messages

The system runs a check on certain components and functions in the vehicle when the ignition is switched on or while the vehicle is in motion. Malfunctions are indicated by red and yellow warning symbols with information messages on the instrument cluster display. An acoustic warning is also given in certain cases. The appearance of the text messages and symbols can vary depending on the version of the instrument cluster.

In addition, a list of the currently present malfunctions can be called up manually. To do so, open the **Vehicle status** or **Vehicle** menu *(→ Vehicle settings menu)*.

Priority 1 warning

The red central warning lamp flashes or lights up, in some cases together with acoustic warnings or additional symbols. **Do not drive on!** Danger. Check the fault. Seek expert assistance immediately.

Priority 2 warning

The yellow central warning lamp flashes or lights up, in some cases together with acoustic warnings or additional symbols. Malfunctions and insufficient service fluids can damage the vehicle and cause it to break down. Check the fault as soon as possible. In this case, go to a suitably qualified workshop immediately and have the system checked. Volkswagen recommends using an authorised Volkswagen repairer.

Note about information in the owner's manual

You will find further information on the warning in the owner's manual.

Information message

Information about various procedures within the vehicle.

If several warnings are present, the symbols will appear for several seconds, one after another. The symbols will continue to appear until the faults are rectified.

If warnings about malfunctions are displayed when the vehicle's drive system is activated, it may not be possible to adjust some settings as described, or the information display may appear differently. If the fault persists, go to a suitably qualified workshop. Volkswagen recommends using an authorised Volkswagen repairer.

Introduction to the instrument cluster

The vehicle is equipped with a digital instrument cluster. The instrument cluster displays basic information such as speed.

Depending on the vehicle equipment, the following functions may also be available:

— Display messages.

— Information on charge level and range.

— Status displays for driver assist systems.

— Various menus, e.g. for driver assist systems.

— Warning and indicator lamps.

The content can be individually customised and settings adjusted in the menus.

WARNING

Operating the instrument cluster and Infotainment system can distract you from the road. If the driver is distracted when driving, this can cause accidents and serious or fatal injuries.

- Drive with your full attention and with responsibility.
- Operate the instrument cluster and the Infotainment system only when the vehicle is stationary or the traffic situation permits.

WARNING

The display may switch itself off if there is a serious fault in the instrument cluster. The red ⚠ central warning lamp may also light up. Warnings can no longer be displayed. This can lead to your vehicle breaking down in traffic and can cause accidents, serious injuries and even death.

- Stop the vehicle in a safe place.
- Seek expert assistance.

When you activate the vehicle's drive system after the 12-volt vehicle battery has been totally discharged, replaced or after a jump start, you may find that system settings, such as personal convenience settings and programming, have been changed or deleted. Check and correct the settings as necessary once the 12-volt vehicle battery has been sufficiently charged.

At cold outside temperatures, the display in the instrument cluster may take slightly longer to appear than at warm outside temperatures.

ID. Cockpit

The ID. Cockpit is a digital instrument cluster with a high-resolution LC colour display. By selecting different information profiles, displays from the driver assist systems and other displays can be shown in addition to the digital speedometer. The term “digital instrument cluster” is used below for the ID. Cockpit.

Fig. 1 In the dash panel: digital instrument cluster (illustration).

Operating the digital instrument cluster

Fig. 1 Right side of the multifunction steering wheel: operating the digital instrument cluster (illustration).

Views in the display area

Information and warnings are shown as an event in the digital instrument cluster. The event display appears in the digital instrument cluster from above and is hidden again after some time.

The different views provide a better overview of the driving data, navigation or information on the driver assist systems.

The amount and scope of the displayed information may differ depending on the vehicle equipment.

The digital instrument cluster can display the following views in the display area:

Summary

Before activation of the vehicle's drive system: display with information on mileage, charge level and range.

Basic

Driving displays with information on speeds, driving data, driver assist systems and navigation.

Driver assist systems

Display of active driver assist systems and speed. The navigation context is hidden.

Navigation

Display with route guidance and speed information. The graphic view of the driver assist systems is hidden.

Situation-dependent information, e.g. navigation information, is displayed as pop-ups.

Setting views

Using the ◁ and ▷ buttons on the multifunction steering wheel, it is possible to choose between the views **Driving data**, **Driver assist systems** and **Navigation**.

— To change to the **Driving data** or **Navigation** view, press the ▷ button.

— To change to the **Driver assist systems** view, press the ◁ button.

— Focus the desired display and hide the remaining display options by briefly pressing the VIEW button.

If warnings about malfunctions are displayed when the ignition is switched on, it may not be possible to adjust some settings as described, or the information display may appear different. If the fault persists, go to a suitably qualified workshop. Volkswagen recommends using an authorised Volkswagen repairer.

WARNING

Operating the instrument cluster and Infotainment system can distract you from the road. If the driver is distracted when driving, this can cause accidents and serious or fatal injuries.

- Drive with your full attention and with responsibility.
- Operate the instrument cluster and the Infotainment system only when the vehicle is stationary or the traffic situation permits.

Digital instrument cluster information displays

Possible notifications in the digital instrument cluster

Depending on the vehicle equipment, various kinds of information can be displayed in the digital instrument cluster:

— Active driver assist systems.

— Outside temperature display.

— Road signs detected by the Dynamic Road Sign Display system

— Odometer displays.

— Open doors, bonnet and boot lid.

— Speed warnings.

— Speed warning for winter tyres.

— Navigation information.

— Personalisation: welcome and user selection.

— Range.

— Remaining charging time during charging of the high-voltage battery *(→ Charging process display)*.

— Service interval display.

— Seat-occupied recognition system.

— Warning and information messages.

Outside temperature display

If the outside temperature falls below around +4°C (around +39°F), a snowflake symbol appears in the upper area of the digital instrument cluster as an overlay ❄. This symbol remains lit until the outside temperature rises above +6°C (+43°F) .

In the following situations, the temperature displayed may be higher than the actual outside temperature as a result of the heat radiated from the vehicle.

— When the vehicle is stationary.

— When travelling at very low speeds.

The measuring range is between -50°C (around -58°F) and +75°C (around +167°F).

⚠ WARNING

Roads may be icy at low outside temperatures, also above freezing. There is an increased risk of accidents on icy roads. This can result in serious or fatal injuries.

- Drive with particular care if the ❄ symbol is displayed on the instrument cluster display.
- Always adapt your speed and driving style to the current visibility, weather and road or traffic conditions.
- Never rely only on the outside temperature display.

Odometer displays

The odometer registers the total distance travelled by the vehicle.

Open doors, bonnet and boot lid

The digital instrument cluster indicates if any doors, the bonnet or boot lid are open once the vehicle has been unlocked and while the vehicle is in motion. In some cases, an acoustic warning is also given.

Speed warning for winter tyres

A display in the digital instrument cluster indicates when you have exceeded the set maximum speed.

Speed warning settings can be made in the vehicle settings in the Infotainment system *(→ Vehicle settings menu)*.

Range

Approximate calculation of the distance in kilometres that can still be travelled with the current battery charge level under the current driving conditions and with the same consumption rate. This distance is calculated using factors that include the current energy consumption.

Seat-occupied recognition system

After activation of the vehicle's drive system, occupied seats are detected and shown on the instrument cluster and the display also shows whether the seat belt is fastened on the occupied seats.

Some notifications in the digital instrument cluster may be overridden by sudden events, e.g. speed warning.

Depending on the vehicle equipment level, some settings and displays may also appear in the Infotainment system.

Charge level and range in the digital instrument cluster

Charge level display

Fig. 1 In the digital instrument cluster: charge level of the high-voltage battery (1) and vehicle range (2) (illustration).

The current charge level of the high-voltage battery is displayed in the digital instrument cluster by the symbol ▬ with a percentage value → *Fig. 1* (1). The fill level of the battery symbol changes with the charge level.

Range display

The vehicle range is specified in kilometres (km) or miles (mi), depending on the setting → *Fig. 1* (2).

The range can also vary even for a fully charged high-voltage battery. The displayed value is calculated and updated based on different criteria:

— Driving style → *General driving tips*.

— Environmental conditions, e.g. low outside temperature.

— Interior air conditioning → *Save electrical energy*.

— Vehicle load → *Do not drive with unnecessary loads in the vehicle*.

— Planned route.

When route guidance is activated, the range is calculated depending on the planned route. Factors taken into account are both the expected speed and the topographical characteristics → *Adjusting the range and Electric Vehicle Route Planner*.

Sufficient charge level and reserve range

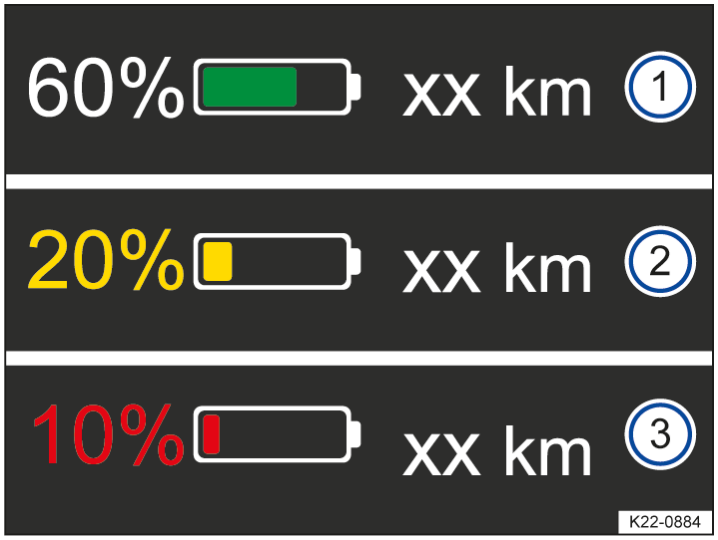

Fig. 2 In the digital instrument cluster: range and reserve capacity display (illustration).

1. Sufficient charge level and range.
2. Reserve capacity warning level 1 and range.
3. Reserve capacity warning level 2 and range.

Sufficient charge level and warning levels for the reserve range:

Green

The charge level is sufficient → *Fig. 2* (1).

Yellow

The charge level is 20% or less than 20% → *Fig. 2* (2).

Red

The charge level is 10 % or less than 10 % → *Fig. 2* (3).

Charge the high-voltage battery as soon as possible to prevent the vehicle from breaking down.

WARNING

Driving when the charge level of the high-voltage battery is too low can lead to the vehicle breaking down when in traffic, and can lead to accidents and serious or fatal injuries.

- Always make sure the high-voltage battery has sufficient charge.

WARNING

When the charge level of the high-voltage battery reaches the reserve range, this may result in changed vehicle handling, e.g. different acceleration response of the vehicle. This can result in accidents and severe injuries.

- Always adapt your speed and driving style to suit visibility, weather, road and traffic conditions as well as the charge level of the high-voltage battery.
- Always make sure the high-voltage battery has sufficient charge.

NOTICE

Self-discharge of the high-voltage battery, e.g. due to the vehicle standing for periods of several months, can lead to the high-voltage battery being damaged if ambient temperatures are high and the high-voltage battery has a low charge level.

- Always make sure the high-voltage battery has sufficient charge.

The range for electric driving may be reduced at very low outside temperatures when the high-voltage battery is consequently very cold.

Power display

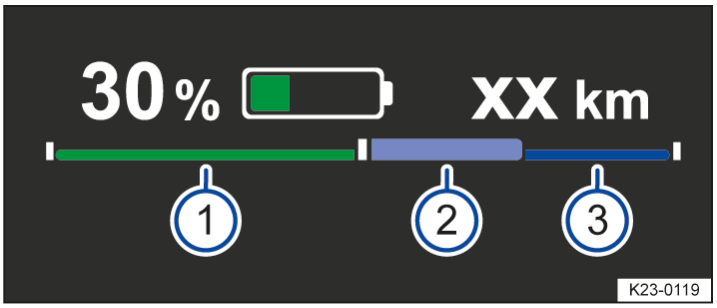

Fig. 1 In the digital instrument cluster: power display (illustration).

The power display shows the current performance capability of the electric drive and the current electric drive or recuperation power while the vehicle is in motion.

Display concept

When the vehicle's drive system has been activated, the **READY** indicator lamp lights up green in the instrument cluster.

Using the bar divided in the middle, the power display continuously shows the availability of brake energy recuperation → *Fig. 1* (1) (green) to the left and traction → *Fig. 1* (3) (dark blue) to the right. The availability is unrestricted when the respective bar reaches the end marking. The bar is shown shortened in each case if availability is restricted.

The currently used drive power is displayed dynamically by a lighter bar, either as brake energy recuperation power (light green) to the left or traction power → *Fig. 1* (2) (light blue) to the right.

The power limit of the electric drive is reached when the current drive power and currently available performance capability are the same (bars filled to equal level)

The power limit cannot be achieved at all vehicle speeds.

Influencing factors

The following influencing factors apply in addition to the vehicle speed:

— The availability of traction and brake energy recuperation depends on the charge level of the high-voltage battery. Brake energy recuperation may be restricted by a high charge level and traction by a low charge level.

— If the temperature of the high-voltage battery gets very low or very high, this can lead to a reduction in the available drive power. This applies to traction and brake energy recuperation

WARNING

Driving when the charge level of the high-voltage battery is too low can lead to the vehicle breaking down when in traffic, and can lead to accidents and serious or fatal injuries.

- Always make sure the high-voltage battery has sufficient charge.

WARNING

When the performance capability of the electric drive is reduced, this may result in changed vehicle handling, e.g. different acceleration response of the vehicle. This can result in accidents and serious or even fatal injuries.

- Always adapt your speed and driving style to suit visibility, weather, road and traffic conditions as well as the charge level of the high-voltage battery.
- Always make sure the high-voltage battery has sufficient charge.

Introduction to the topic

Fig. 1 In the driver's field of vision: displays in the head-up display (illustration).

1 Close range.

2 Far range with AR function.

The head-up display projects selected information or warning messages from the assist systems or the Infotainment system into the driver's field of vision.

Display areas

Explanations of the areas shown in the head-up display (HUD) → *Fig. 1*:

Head-up display close range

Information on speed, charge level, consumption, navigation and driver assist systems is displayed in the close range of the HUD (1).

Augmented reality head-up display (AR HUD)

In augmented reality HUD (2), information can be projected directly into the driver's field of vision depending on the situation. The information may be for navigation purposes, for example.

The amount and scope of the displayed information may differ depending on the vehicle equipment.

Operating the head-up display

Switching the head-up display on and off

The head-up display can be switched on and off in the vehicle settings in the Infotainment system.

1. Tap the **Vehicle** function button.
2. In the **Vehicle** selection, choose the view **Interior** and tap the **Head-up display** function button.
3. Switch the head-up display on or off as desired. The activated functions are highlighted in colour.

Adjusting the height

In order to adjust the image's vertical position to your individual seating position, adjust the head-up display in the Infotainment system using the corresponding menu in the vehicle settings.

1. Assume the correct sitting position.
2. Adjust the desired position and angle of the head-up display using the function buttons.

The rotation of the close range can also be adjusted in the vehicle settings in the Infotainment system.

Settings in the Infotainment system

You can configure additional settings for the head-up display in the vehicle settings in the Infotainment system.

In the submenu **Head-up display settings**:

— Adjust the head-up display brightness.

— Select the content of the head-up display (e.g. to display the driver assist systems).

— Alternative colour scheme of the head-up display for poor weather conditions, e.g. snowfall.

— Reset to factory settings.

Selecting displays via the multifunction steering wheel

Fig. 1 Right side of the multifunction steering wheel: selecting displays (illustration)

In the head-up display close range:

1. Select the desired display on the head-up display using the ◁ and ▷ buttons on the multifunction steering wheel → *Fig. 1*.
2. Focus the desired display and hide the remaining display options by briefly pressing the VIEW button.

Switching the far range with augmented reality head-up display on and off

1. To switch on the far range with augmented reality head-up display, focus the head-up display close range and press and hold the VIEW button on the multifunction steering wheel for a few seconds.
2. To switch off the far range with augmented reality head-up display again, focus the head-up display close range again and press and hold the VIEW button on the multifunction steering wheel again for a few seconds.

A message is displayed briefly on the instrument cluster with information on the selected status of the augmented reality head-up display.

WARNING

Operating the instrument cluster and Infotainment system can distract you from the road. If the driver is distracted when driving, this can cause accidents and serious or fatal injuries.

- Drive with your full attention and with responsibility.
- Only operate the instrument cluster and the Infotainment system when the vehicle is stationary or the traffic situation permits.

ID. Light

ID. Light is an intelligent light concept that displays additional information on the vehicle status. When the vehicle's drive system is activated and while driving, information on the current driving situation is provided via ID. Light.

The ID. Light shows information and warnings for the following systems and functions:

— Adaptive Cruise Control (ACC).

— Operating pause.

— Entry and exit lighting.

— Eco Assistance.

— Reduced power.

— Traffic hazard alert (V2X).

— Charging processes.

— Steering wheel contact detection.

— Navigation.

— Automatic Emergency Braking (Front Assist).

— Park Assist Plus.

— Voice control.

— Phone call.

— Lock & Unlock.

Some of the displayed selection options may not be functional.

The displayed information may be changed and extended by an over-the-air update.

If the charge level of the 12-volt vehicle battery is insufficient, the function may not be available or may only be available to a limited extent *(→ 12-volt vehicle battery)*.

Adjusting brightness

1. Tap the Vehicle function button on the Infotainment system.
2. Select display content for the **Interior**. Then tap the ID. Light function button.
3. Adjust the brightness by means of the touch slider.
4. To return to the previous menu, tap ↩.

Activating and deactivating functions

You can activate or deactivate certain ID. Light functions in the vehicle settings of the Infotainment system.

Activated functions are highlighted in colour.

1. To return to the previous menu, tap ↩.

Multifunction display

The multifunction display shows driving and fuel consumption data, e.g. driving time, distance travelled. Depending on equipment, several displays for driving data are available in the Infotainment system, in the digital instrument cluster and in the head-up display (HUD).

The driving data values contain information about the journey time and distance travelled, the current consumption, as well as the average speed and average consumption. The driving data is determined over different evaluation periods. This means that the currently displayed value may differ from the actual average value.

Since start recorder

You can view the **Since start** recorder and reset it if necessary.

In the Infotainment system:

1. Tap **Vehicle** in the Infotainment system.
2. Open the **Data** menu and select the corresponding recorder.
3. Tap the 0.0 function button to reset the recorder.

In the digital instrument cluster:

1. Use the ◁ and ▷ buttons on the multifunction steering wheel to select the **Driving data** view.
2. Press the OK button on the multifunction steering wheel repeatedly until the **Since start** recorder is displayed.
3. To reset the recorder, press and hold the OK button on the multifunction steering wheel for a few seconds.

The recorder collects the driving data for up to 29 days (696 hours) of driving time or 10,000 km (around 6,214 mi) distance covered. The recorder is automatically reset if one of these maximum values is exceeded.

The recorder will be automatically reset if the journey is interrupted for more than two hours.

Since charge recorder

You can view the **Since charge** recorder in the Infotainment system.

1. Tap **Vehicle** in the Infotainment system.
2. Open the **Data** menu and select the corresponding recorder.

The recorder is automatically reset after each charging process of the high-voltage battery.

The recorder collects the driving data for up to 29 days (696 hours) of driving time or 10,000 km (around 6,214 mi) distance covered. The recorder is automatically reset if one of these maximum values is exceeded.

Long-term recorder

You can view the **Long-term** recorder and reset it if necessary.

In the Infotainment system:

1. Tap **Vehicle** in the Infotainment system.
2. Open the **Data** menu and select the corresponding recorder.
3. Tap the 0.0 function button to reset the recorder.

In the digital instrument cluster:

1. Use the ◁ and ▷ buttons on the multifunction steering wheel to select the **Driving data** view.
2. Press the OK button on the multifunction steering wheel repeatedly until the **Long-term** recorder is displayed.
3. To reset the recorder, press and hold the OK button on the multifunction steering wheel for a few seconds.

The recorder collects the driving data for up to 364 days (8736 hours) of driving time or 10,000 km (around 6,214 mi) distance covered. The recorder is automatically deleted if one of these maximum values is exceeded.

Resetting the trip recorder

1. Tap **Vehicle** in the Infotainment system.
2. In the **Vehicle** menu, tap the **Status** function button.
3. Tap **Distance**.
4. Tap the 0.0 function button to reset the value.

WARNING

Operating the instrument cluster and Infotainment system can distract you from the road. If the driver is distracted when driving, this can cause accidents and serious or fatal injuries.

- Drive with your full attention and with responsibility.
- Operate the instrument cluster and the Infotainment system only when the vehicle is stationary or the traffic situation permits.

Service menu

Settings can be made in the Service menu depending on the vehicle equipment.

Opening the Service menu

1. Tap **Vehicle** in the Infotainment system.
2. In the **Vehicle** menu, tap the **Status** function button.
3. Tap **Service** to display the service information.

   The activated functions are highlighted in colour.

   The mileage or days until the next inspection are displayed.
4. To return to the previous menu, tap .

Service interval display

Service events are displayed on the digital instrument cluster and in the Infotainment system.

Service notification

When an inspection is due, a service announcement will appear on the display when the ignition is switched on.

The number of kilometres or amount of time shown correspond to the maximum number of kilometres or maximum time that can still be driven before the next inspection.

One of the following displays may be shown:

— **Inspection in xx km!**

— **Inspection in xx days!**

Service event

For a scheduled inspection, an acoustic signal will be given when the ignition is switched on and the spanner symbol will be displayed for several seconds on the digital instrument cluster. The following display will also appear:

— **Please have your vehicle inspected**

Accessing the service interval display in the Infotainment system

1. Tap **Vehicle**.
2. Tap the **Status** menu.
3. Tap **Service** to display the service information.

   The activated functions are highlighted in colour.

   The mileage or days until the next inspection are displayed.

Resetting the service interval display

The service interval display can only be reset as part of an inspection by a suitably qualified workshop. Volkswagen recommends using an authorised Volkswagen repairer.

The service message goes out automatically after a few seconds once the vehicle's drive system has been activated, or when you press the OK button on the multifunction steering wheel.

Time and date

Setting the time and date in the Infotainment system

1. Tap **Settings** *(→ Vehicle settings menu)*.
2. Open the **Time and date** menu option.
3. Select the time source:
   — **Automatic.**
   — **Manual.**

The time and date are displayed only on the Infotainment system.

The automatic time function may not be available or may be restricted depending on the equipment and country. Set the time manually in this case.

Exit menu

In the exit menu, you can adjust settings for some functions before you leave the vehicle. When you deactivate the vehicle's drive system, the Exit menu is displayed in the Infotainment system.

The displayed options depend on the vehicle equipment and may be available only under certain conditions. The adjustable functions may include the following, for example:

— Charging the high-voltage battery.

— Interior monitoring.

Hiding

The exit menu is automatically hidden when you leave the vehicle.

1. To hide the exit menu manually, tap ▢.

The exit menu can be opened again by reactivating the vehicle's drive system and then deactivating it again immediately.

Setting

You can select the entries individually and arrange their order.

1. Tap ⊘.
2. Select the desired entries and re-arrange their order as required.
3. Tap ⊘ again.

Vehicle settings menu

You can switch individual functions and systems on and off and adjust the settings in the vehicle settings of the Infotainment system.

General information on operation

The activated functions are highlighted in colour.

Opening the Vehicle settings menu

1. Switch on the ignition.
2. Switch on Infotainment system if necessary.
3. Tap the **Vehicle** menu.
4. Depending on the equipment: tap the Vehicle menu option and choose between **Interior** or **Exterior**.

   Or: select the menu option.
5. Open the desired item from the submenus and make the setting as required.
6. To return to the home screen, tap the home button .

Systems settings and vehicle information display

Depending on the version, information can be displayed or settings adjusted in the **Vehicle settings** menu:

— Depending on the equipment: 3D vehicle view (**Interior** or **Exterior**).

— Driving data.

— Vehicle status.

When you activate the vehicle's drive system after the 12-volt vehicle battery has been totally discharged, replaced or after a jump start, you may find that system settings, e.g. personal convenience features, have been changed or deleted. Check and correct the settings as necessary once the 12-volt vehicle battery has been sufficiently charged.

WARNING

Operating the Infotainment system can distract you from the road. If the driver is distracted when driving, this can cause accidents and serious or fatal injuries.

- Drive with your full attention and with responsibility.
- Only operate the Infotainment system when the vehicle is stationary or when the traffic situation permits.

Introduction to the topic

Fig. 1 On the display of the digital instrument cluster: Drowsiness Monitor symbol.

The Drowsiness Monitor informs the driver if their driving shows signs of fatigue.

The Drowsiness Monitor determines the driver's driving behaviour while driving and uses this information to evaluate the tiredness of the driver. If the system detects that the driver is tired, it provides a visual indication of this on the instrument cluster display by means of a warning or indicator lamp in combination with a supplementary text message and also issues an acoustic warning *→ Warning levels of the Drowsiness Monitor*. The text message is shown in the instrument cluster display for around 6 seconds.

Function conditions

The function is only activated at a speed above around 65 km/h (around 40 mph) and is then deactivated again at a speed below 60 km/h (around 37 mph).

⚠ WARNING

The Drowsiness Monitor is not a substitute for the full attention of the driver and operates only within the limits of the system. The Drowsiness Monitor therefore may not detect that the driver is tired in all situations and may not warn or may warn with a delay or in an undesired way. There is a risk of accidents and serious or even fatal injuries.

- Always pay due attention and do not rely exclusively on the system. The driver is responsible at all times for their fitness to drive.
- Observe the system limits *(→ Drowsiness Monitor)*.
- Never drive a vehicle when you are tired.
- During long trips, take regular and sufficient breaks.
- Follow the information in the instrument cluster display and respond according to the requests *(→ Drowsiness Monitor)*.

System limits of the Drowsiness Monitor

The Drowsiness Monitor has system-related limitations. The following conditions can limit the function of the Drowsiness Monitor, or prevent it from working altogether:

— Speeds below around 60 km/h (around 37 mph).

— Speeds above around 130 km/h (around 80 mph).

— Twisting roads.

— Poor roads.

— Adverse weather conditions.

— Road works.

— Sporty driving style.

— The driver is heavily distracted.

The Drowsiness Monitor has been developed for use only while driving on motorways and good main roads.

Microsleep

No urgent warning is issued for microsleep.

Resetting the Drowsiness Monitor

The Drowsiness Monitor is reset in the following situations:

— The ignition is switched off.

— The driver seat belt is unfastened and the driver door is open.

— The vehicle has been stationary for longer than around 30 minutes.

Driving with Drowsiness Monitor

Switching on and off

Depending on the country, the Drowsiness Monitor is always switched on when the vehicle's drive system is activated.

If required, you can switch off the Drowsiness Monitor manually in the Infotainment system:

1. Open the **Assist systems** menu.
2. Switch the Drowsiness Monitor on or off in the corresponding submenu.

Or:

1. Open the Control Centre *(→ Introduction to the Infotainment system)*.
2. Switch the Drowsiness Monitor on or off.

Adjusting the sensitivity

You can adjust the sensitivity of the Drowsiness Monitor manually and therefore influence how quickly the system reacts to your driving behaviour. This setting option is dependent on the equipment level and is not available in all countries.

In the Infotainment system:

1. Open **Assist systems**.
2. Select the **Drowsiness Monitor** menu.
3. Select sensitivity in the **Sensitivity** submenu *(→ Vehicle settings menu)*.

Hiding messages via the multifunction steering wheel

1. Press the OK button on the multifunction steering wheel.

WARNING

Operating the instrument cluster and Infotainment system can distract you from the road. If the driver is distracted when driving, this can cause accidents and serious or fatal injuries.

- Drive with your full attention and with responsibility.
- Only operate the instrument cluster and the Infotainment system when the vehicle is stationary or the traffic situation permits.

Warning levels of the Drowsiness Monitor

If the system detects that the driver is tired, it provides a visual indication of this on the instrument cluster display by means of a warning or indicator lamp in combination with a supplementary text message and an acoustic warning. A warning is issued in three levels.

Drowsiness Monitor warning – Level 1

- The system has detected that the driver is starting to become tired.

  An acoustic warning sounds. A white indicator lamp appears together with a text message on the instrument cluster display. Consider taking a break.

Drowsiness Monitor warning – Level 2

- The system has detected that the driver is becoming increasingly tired.

  An acoustic warning sounds. A red warning lamp appears together with a text message on the instrument cluster display. Consider taking a break soon.

Drowsiness Monitor warning – Level 3

- Acute risk detected.

  An acoustic warning sounds. A red warning lamp appears together with a text message on the instrument cluster display. Acute risk to traffic. Stop your journey as quickly as possible and drive as a matter of urgency to the nearest place where it is possible to take a break.

Time-dependent information

- The Drowsiness Monitor detects a journey time of 4.5 hours without a break and without recognised tiredness on the part of the driver.

  A white indicator lamp appears together with a text message on the instrument cluster display. Consider taking a break.

Troubleshooting

Drowsiness Monitor not available

An acoustic warning sounds. A yellow indicator lamp appears in combination with the yellow central warning lamp. A text message is also displayed on the instrument cluster display and in the **Vehicle status** menu.

— Fault or malfunction. Deactivate and reactivate the vehicle's drive system. Check the settings for the Drowsiness Monitor in the Infotainment system *(→ Drowsiness Monitor)*.

— The system limits of the Drowsiness Monitor are not met *(→ Drowsiness Monitor)*.

— If the problem persists, go to a suitably qualified workshop. Volkswagen recommends using an authorised Volkswagen repairer.

Introduction to the topic

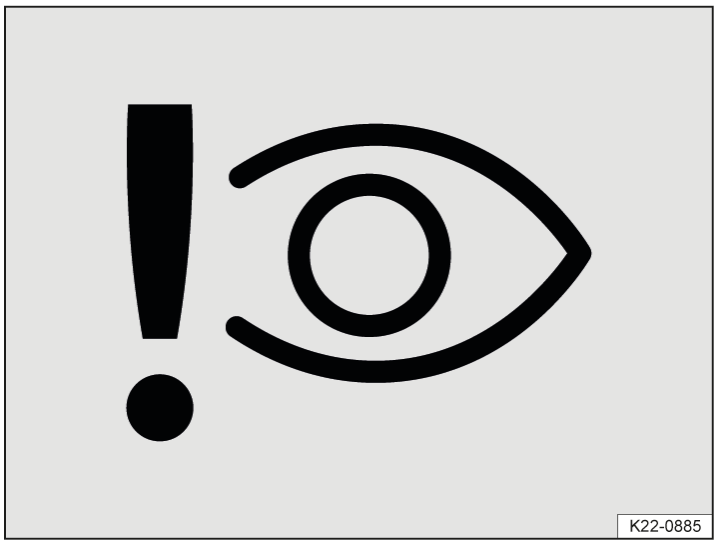

Fig. 1 On the display of the digital instrument cluster: Driver Attention Monitor symbol.

The Driver Attention Monitor informs the driver if their driving behaviour indicates a lack of attention on the basis of the vehicle-related operating inputs.

The Driver Attention Monitor evaluates the driver's vehicle-related operating inputs in order to establish whether the driver is distracted. If the system detects that the driver is distracted, it indicates this on the instrument cluster display by means of a warning or indicator lamp in combination with a supplementary text message and, depending on the settings, also issues an acoustic warning *→ Warning levels of the Driver Attention Monitor*. The text message on the instrument cluster display is shown for around 4 to 6 seconds.

Function conditions

The driving behaviour is evaluated only when the speed is above around 20 km/h (around 12 mph).

⚠ WARNING

The Driver Attention Monitor is not a substitute for the full attention of the driver and operates only within the limits of the system. The Driver Attention Monitor therefore may not be able to detect whether the driver is paying attention in all situations and may not react or may react with a delay or in an undesired way. There is a risk of accidents and serious or even fatal injuries.

- Always pay due attention and do not rely exclusively on the system. The driver is responsible at all times for their fitness to drive.
- Observe the system limits *(→ Driver Attention Monitor)*.
- Do not allow yourself to be distracted when driving.
- Adjust personal vehicle settings before starting your journey.
- Follow the information in the instrument cluster display and respond according to the requests *(→ Driver Attention Monitor)*.

In the event of a fault, have the system checked by a suitably qualified workshop. Volkswagen recommends using an authorised Volkswagen repairer.

System limits of the Driver Attention Monitor

The Driver Attention Monitor has system-related limitations. The following conditions can limit the function of the Driver Attention Monitor, or prevent it from working altogether:

— Speeds below around 10 km/h (around 6 mph).

— Heavy distraction of the driver due to external influences, such as traffic.

— Significant driver distraction resulting from operation of devices not part of the vehicle, e.g. mobile devices.

Driving with the Driver Attention Monitor

Switching on and off

Depending on country, the Driver Attention Monitor is always switched on when the vehicle's drive system is activated.

1. If required, you can switch off the Driver Attention Monitor manually in the Infotainment system:

   Open the **Assist systems** menu.

2. Switch the Driver Attention Monitor on or off in the corresponding submenu.

Or:

1. Open the Control Centre *(→ Introduction to the Infotainment system)*.
2. Switch the Driver Attention Monitor on or off.

If the function was switched off manually during the last journey, this setting is also maintained when the vehicle is started again.

Activating and deactivating the acoustic warning

You can activate and deactivate the acoustic warning manually. This setting option is dependent on the equipment level and is not available in all countries.

In the Infotainment system:

1. Open the **Assist systems** menu.
2. Tap **Attention Monitor**.
3. Activate or deactivate the acoustic warning in the corresponding option.

Adjusting the sensitivity

You can adjust the sensitivity of the Driver Attention Monitor manually and therefore influence how quickly the system reacts to your driving behaviour. This setting option is dependent on the equipment level and is not available in all countries.

In the Infotainment system:

1. Open the **Assist systems** menu.
2. Tap **Attention Monitor**.
3. Select sensitivity in the **Sensitivity** submenu.

Hiding messages via the multifunction steering wheel

1. Press the OK button on the multifunction steering wheel.

WARNING

Operating the instrument cluster and Infotainment system can distract you from the road. If the driver is distracted when driving, this can cause accidents and serious or fatal injuries.

- Drive with your full attention and with responsibility.
- Operate the instrument cluster and the Infotainment system only when the vehicle is stationary or the traffic situation permits.

Warning levels of the Driver Attention Monitor

If the system detects that the driver is distracted, it provides a visual indication of this on the instrument cluster display by means of a warning or indicator lamp in combination with a supplementary text message and, depending on setting, by means of an acoustic warning. The warning has up to three stages.

Driver Attention Monitor warning – Stage 1

Distraction detected.

Depending on the settings, an acoustic warning may be issued. A white indicator lamp appears together with a text message on the instrument cluster display. Stop distracting activity and pay attention to the traffic.

Driver Attention Monitor warning – Stage 2

Increasing distraction detected.

Depending on the settings, an acoustic warning may be issued. A red warning lamp appears together with a text message on the instrument cluster display. Stop distracting activity and pay attention to the traffic.

Driver Attention Monitor warning – Stage 3

Acute risk detected.

Depending on the settings, an acoustic warning may be issued. A red warning lamp appears together with a text message on the instrument cluster display. Acute risk to traffic. Stop distracting activity immediately and pay attention to the traffic.

Troubleshooting

Driver Attention Monitor is not available

An acoustic warning sounds. A yellow indicator lamp appears in combination with the yellow central warning lamp. A text message is also displayed on the instrument cluster display and in the **Vehicle status** menu.

— Check the causes and remedies described in the information on the Driver Attention Monitor.

— Fault or malfunction. Deactivate and reactivate the vehicle's drive system. Check the settings for the Driver Attention Monitor in the Infotainment system.

— The system limits of the Driver Attention Monitor are not met *(→ Driver Attention Monitor)*.

— If the problem persists, go to a suitably qualified workshop. Volkswagen recommends using an authorised Volkswagen repairer.

Introduction to the topic

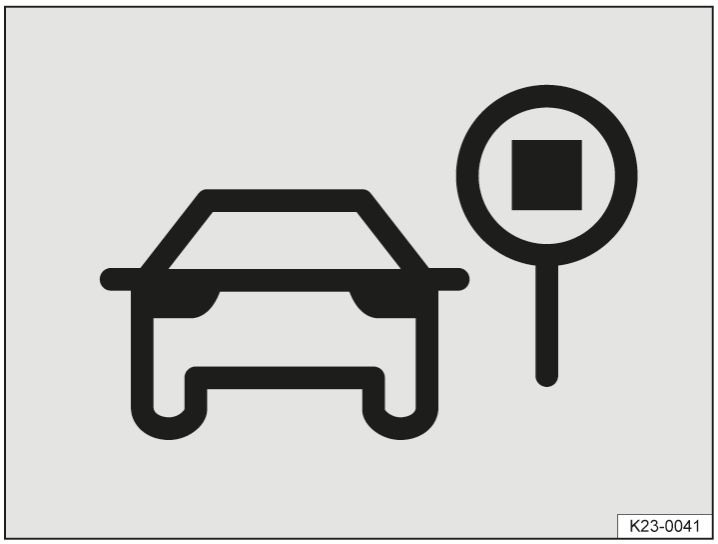

Fig. 1 On the display of the digital instrument cluster: Advanced Road Sign Display symbol.

The Advanced Road Sign Display system detects speed limits, overtaking restrictions and selected danger signs and informs the driver if the maximum permitted speed is exceeded.

The Advanced Road Sign Display system uses a camera in the base of the interior mirror to detect standard road signs and informs the driver of any detected speed limits, overtaking restrictions and selected danger signs. Within the system limits, the Dynamic Road Sign Display of the Advanced Road Sign Display system also displays sub-plates, e.g. to indicate restrictions that apply only at certain times. In some cases, the system can also display the current speed limits on non-signposted routes.

If the maximum permitted speed is exceeded, the speed warning function of the Advanced Road Sign Display system shows this visually on the instrument cluster display by a flashing speed limit detected by the system and, depending on setting, also issues an acoustic warning → *Warning levels of the speed warning function*.

Dynamic Road Sign Display

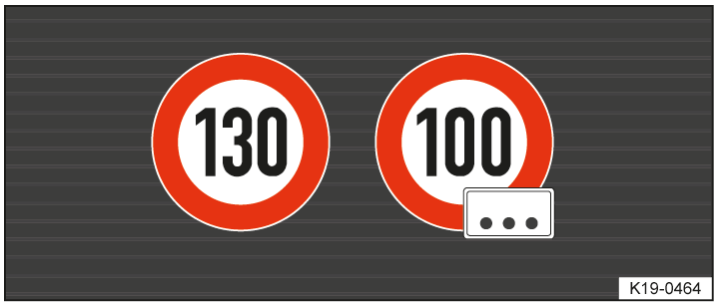

Fig. 2 On the display of the digital instrument cluster: displays of Dynamic Road Sign Display with generic sub-plate (illustration).

After validation and evaluation of the information from the camera, the Infotainment system and the current vehicle data, the Dynamic Road Sign Display shows up to two valid road signs and one generic sub-plate → *Fig. 2*:

1st position:

The road sign that currently applies to the driver is shown on the left-hand side of the display, e.g. a speed limit of **130 km/h** (**80 mph**).

2nd position:

An additional road sign can be displayed in second position, e.g. an additional speed limit with generic sub-plate.

Sub-plate:

A detected sub-plate, e.g. with time restrictions, is displayed under the valid road sign. Due to system limitations, a generic sub-plate is displayed instead of the sub-plate actually detected. Depending on equipment, the valid road sign is supplemented with the generic sub-plate in the head-up display.

The display of danger signs is not available in all countries and the system may not be able to recognise all danger signs.

In addition to speed limits and overtaking restrictions, Dynamic Road Sign Display also detects the road sign which indicates that all restrictions have been lifted on motorways and main roads in Germany. In all other countries in which the system is operated, the current speed limit is displayed instead.

The road signs detected by Dynamic Road Sign Display are displayed on the instrument cluster display. Road signs may also be displayed in the Infotainment system, depending on the system installed in the vehicle.

With some equipment levels, a display is also shown on the head-up display

⚠ WARNING

The Advanced Road Sign Display system is not a substitute for the full attention of the driver and operates only within the limits of the system. The Advanced Road Sign Display system therefore cannot recognise all road signs and may not react or may react with a delay or in an undesired way. Driving recommendations and traffic symbols displayed by the Dynamic Road Sign Display system may differ from the current traffic situation.

- Observe the system limits *(→ Advanced Road Sign Display)*.
- Keep the navigation data up-to-date.
- Always pay due attention and do not rely exclusively on the system. The driver is always responsible for all driving tasks.
- Road signs on the road and traffic regulations have priority over the recommendations and displays provided by the Dynamic Road Sign Display system.
- Always adapt your speed and driving style to the current visibility, weather and road or traffic conditions.
- Follow the information in the instrument cluster display and respond according to the requests *(→ Advanced Road Sign Display)*.

System limits of the Advanced Road Sign Display

The Advanced Road Sign Display has system-related limitations. The following conditions can limit the function of the Advanced Road Sign Display system, or prevent it from working altogether:

— High ambient temperatures or prolonged exposure to direct sunlight.

— Poor visibility, e.g. in snowy conditions.

— Glare, e.g. from oncoming traffic or sunlight.

— High speeds.

— Dirty camera.

— Road signs located outside of the camera's field of view.

— Partially or fully hidden road signs, e.g. by trees, snow, dirt or other vehicles.

— Non-standard road signs.

— Damaged or bent road signs.

— Variable road signs on gantries (changeable road sign display using LEDs or other light sources).

— Out-of-date map material in the Infotainment system.

— Vehicles with road sign stickers, e.g. speed restrictions on trucks.

The system partly uses the camera behind the windscreen. You can find further information in the section on sensors .

The system also uses navigation data even if the vehicle does not have a navigation system. Keep the navigation data up-to-date *(→ Navigation)*. If you have any questions, please contact a suitably qualified workshop. Volkswagen recommends using an authorised Volkswagen repairer.

Driving with speed warning

Function conditions

The speed warning function warns at speeds above around 20 km/h (around 12 mph).

Switching on and off

Depending on the country, the speed warning is always switched on when the vehicle's drive system is activated.

If required, you can switch off the speed warning manually in the Infotainment system:

1. Open the **Assist systems** menu.
2. Switch the speed warning on or off in the corresponding submenu.

Or:

1. Open the Control Centre *(→ Introduction to the Infotainment system)*.
2. Switch the speed warning on or off.

Activating and deactivating the acoustic warning

In the Infotainment system:

1. Open the **Assist systems** menu.
2. Tap **Speed warning**.
3. Activate or deactivate the acoustic warning in the corresponding option.

The acoustic warning is always activated when the vehicle's drive system is activated.

Adjusting the warning threshold

You can adjust the warning thresholds of the speed warning function manually.

In the Infotainment system:

1. Open the **Assist systems** menu.
2. Tap **Speed warning**.
3. To select the level for the warning thresholds, tap ∨ in the **Warning threshold** menu option.

When the vehicle's drive system is activated, the warning thresholds of the speed warning are always reset to the default value.

Activating and deactivating the change tone

The change tone informs the driver acoustically about a change in the speed limits. You can switch off the change tone manually if required.

In the Infotainment system:

1. Open the **Assist systems** menu.
2. Tap **Speed warning**.
3. Activate or deactivate the change tone in the corresponding option.

Hiding fault messages via the multifunction steering wheel

1. Press the OK button on the multifunction steering wheel.

⚠ WARNING

Operating the instrument cluster and Infotainment system can distract you from the road. If the driver is distracted when driving, this can cause accidents and serious or fatal injuries.

- Drive with your full attention and with responsibility.
- Only operate the instrument cluster and the Infotainment system when the vehicle is stationary or the traffic situation permits.

Warning levels of the speed warning function

If the system detects that the maximum permitted speed has been exceeded, it shows this visually on the instrument cluster display by a flashing speed limit detected by the system and, depending on setting, also issues an acoustic warning. A warning is issued in two warning levels.

Fig. 1 On the display of the digital instrument cluster: detected violation of maximum permitted speed (illustration).

Speed warning – Level 1

Violation of maximum permitted speed detected.

The speed limit detected by the system flashes continuously in the instrument cluster and, depending on equipment, in the head-up display → *Fig. 1*.

Speed warning – Level 2

Progressive violation of maximum permitted speed detected.

An acoustic warning sounds. The speed limit detected by the system flashes continuously in the instrument cluster and, depending on equipment, in the head-up display → *Fig. 1*.

The second warning level is triggered if the speed continues to increase above the speed limit.

The second warning level is cancelled again when the driver actively slows down.

Troubleshooting

Advanced Road Sign Display is outside the operating region

An acoustic warning sounds. A text message is displayed on the instrument cluster display and in the **Vehicle status** menu.

— No data available for this region. The Advanced Road Sign Display system is not supported in the country in which you are currently travelling.

Advanced Road Sign Display is not available

An acoustic warning sounds. A yellow indicator lamp is displayed on the instrument cluster display in combination with the yellow central warning lamp. A text message is also displayed on the instrument cluster display and in the **Vehicle status** menu.

— The windscreen is dirty in the area of the camera or the camera view is impaired due to the weather conditions. Clean the windscreen *(→ Vehicle care)*.

— The view of the camera is impaired by add-on parts or stickers. Keep the area around the camera window free *(→ Accessories and replacement parts)*.

— The camera has been displaced or damaged, e.g. due to damage to the windscreen. Check whether damage is visible *(→ Accessories and replacement parts)*.

— The camera was deactivated automatically due to a high ambient temperature or prolonged exposure to direct sunlight. When the camera is available again, the Advanced Road Sign Display system will also be available once more. Deactivate and reactivate the vehicle's drive system.

— Fault or malfunction. Deactivate and reactivate the vehicle's drive system.

— If the problem persists, go to a suitably qualified workshop. Volkswagen recommends using an authorised Volkswagen repairer.

Advanced Road Sign Display is partially deactivated

A white indicator lamp is shown in the instrument cluster display.

The default settings for the speed warning have been changed:

— Check whether the speed warning is deactivated *(→ Advanced Road Sign Display)*.

— Check whether the acoustic warning is activated *(→ Advanced Road Sign Display)*.

— Check whether the default warning threshold has been changed *(→ Advanced Road Sign Display)*.

Introduction to the topic

Number of seats

The vehicle has a total of five seats: two at the front and three at the rear.

Each seat is equipped with a seat belt.

Assuming an incorrect sitting position considerably impairs the level of protection provided by a seat belt. This could lead to severe or even fatal injuries. The risk of severe or fatal injuries is especially increased when a deploying airbag strikes a vehicle occupant who has assumed an incorrect sitting position. The driver is responsible for all occupants transported in the vehicle, especially children.

WARNING

Assuming an incorrect sitting position in the vehicle can increase the risk of severe or fatal injuries during a sudden driving or braking manoeuvre, in the event of a collision or accident, or if the airbags are triggered.

- All vehicle occupants must assume a correct sitting position before setting off and maintain this position throughout the trip. This also applies to the fastening of seat belts.
- The number of vehicle occupants must never exceed the number of seats with seat belts in the vehicle.
- Never tilt the backrest too far to the rear.
- Always keep your feet in the footwell during the journey. Never place your feet on the seat or dash panel, for example. Never hold your feet out of the window. If you sit like this, the airbag and seat belt cannot provide optimal protection and could actually increase the risk of injury during an accident.

Correct sitting position

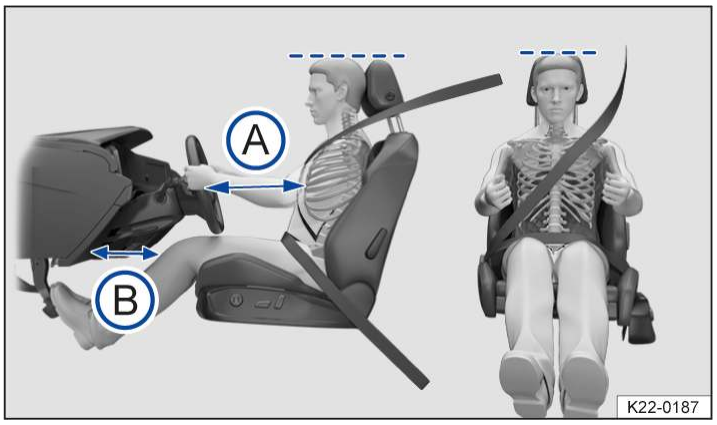

Fig. 1 Correct distance between the driver and the steering wheel, correct seat belt routing and correct head restraint adjustment (illustration).

The following describes the correct sitting positions for the driver and passengers.

The seat belts and airbags can only provide a maximum level of protection if a correct sitting position is assumed. If any vehicle occupants cannot assume a correct sitting position due to their physical build, they should contact a suitably qualified workshop to find out about possible special modifications. Volkswagen recommends using an authorised Volkswagen repairer.

Volkswagen recommends the following seating position for your own safety, for the most fatigue-free driving possible and to reduce the level of injury in the event of a sudden braking manoeuvre or an accident:

The following applies to all vehicle occupants:

— Adjust the head restraint so that its upper edge is at the same height as the top of the head, but not lower than eye level. Position the back of your head as close to the head restraint as possible at all times → *Fig. 1*.

— For small people, push the head restraint all the way down, even if the head is then located underneath the top edge of the head restraint.

— For tall people, push the head restraint up as far as it will go.

— Always keep both feet in the footwell.

— Adjust and fasten seat belts properly .

Additional points for the driver:

— Sit as far back as possible on the seat.

— Adjust the driver seat by moving it forwards or backwards so that you are able to press the pedals to the floor with your knees still slightly bent and so that the distance from the dash panel to your knees is at least 10 cm (around 4 inches) → *Fig. 1* (B).

— Adjust the height so that you can reach the highest point of the steering wheel.

— Move the backrest into an upright position so that your back rests fully against it.

— The thighs should rest loosely on the seat. The back of the knees should protrude a few centimetres beyond the front edge of the seat. Use further equipment-dependent adjustment options for the seats *(→ Front seat, mechanical)* *(→ Front seat, electric)*.

— Adjust the seat so that the distance between the steering wheel and your breastbone is at least 25 cm (around 10 inches) → *Fig. 1* (A) and the circumference of the steering wheel can be held at the sides with both hands and your arms slightly bent.

— The steering wheel must always point towards the breastbone and not towards the face.

Additional points for the front passenger:

— Move the backrest into an upright position so that your back rests fully against it.

— Push the front passenger seat into the rear half of the adjustment range so that the airbag can provide maximum protection if it is deployed.

Introduction to the topic

If worn properly, seat belts hold the vehicle occupants in the correct sitting position during an accident or braking manoeuvre, providing maximum protection.

WARNING

Incorrectly fastened or unfastened seat belts can increase the risk of severe or fatal injuries.

- Before every trip, each vehicle occupant must adopt the correct sitting position, correctly fasten the seat belt belonging to their seat and keep it fastened properly throughout the trip.
- Before every journey and while the vehicle is in motion, secure all children travelling in the vehicle in a restraint system suitable for their weight and height. They must also wear correctly fastened seat belts .
- Insert the latch plate only into the belt buckle of the corresponding seat and make sure that the latch plate engages securely. Using a buckle that does not belong to the seat that you are occupying reduces the level of protection and can lead to severe injuries.
- Never unfasten the seat belt while the vehicle is in motion.
- Never allow more than one person to share the same seat belt.
- Never transport children or babies on your lap and never secure them using the same seat belt as another person.
- Never travel wearing loose, bulky clothing (such as an overcoat over a jacket). This could prevent the seat belts from fitting and functioning properly.

WARNING

Damaged seat belts increase the risk of serious or fatal injuries. If the belt webbing or any other part of the seat belt becomes damaged, the seat belt may tear during an accident or sudden braking manoeuvre.

- Never damage the belt by trapping it in the door or in the seat mechanism.
- If the belt webbing, belt connections, belt retractor or seat belt buckle become damaged, the seat belt or belt attachment element in question must be replaced immediately by a suitably qualified workshop. The suitably qualified workshop must use correct spare parts that are compatible with the vehicle, equipment level and model year. Volkswagen recommends using an authorised Volkswagen repairer.
- Never try to repair, modify or remove the seat belts or belt attachment elements yourself. All repairs to the seat belts, belt retractors and buckles must be carried out by a suitably qualified workshop. The correspondingly qualified workshop must replace the seat belt only with a seat belt that is approved for the seat in question. Volkswagen recommends using an authorised Volkswagen repairer.
- Have seat belts that have been subjected to stress and stretched during an accident replaced by a suitably qualified workshop. Volkswagen recommends using an authorised Volkswagen repairer. Renewal may be necessary even if there is no apparent damage. Also check the anchorages of the seat belts.

WARNING

Using seat belts incorrectly increases the risk of severe or fatal injuries.

- Regularly check to ensure that the seat belt and its related parts are in perfect condition.
- Always keep the seat belts clean.
- Avoid allowing foreign bodies or liquids to enter the seat belt buckle slots and belt buckles. This could prevent the seat belt buckle slots, belt buckles and seat belts from working properly.
- Never trap the seat belt. Never damage the belt or allow it to rub against sharp edges.

Seat belt warning system

Warning lamp for the seat belt warning system on the instrument cluster display.

Seat belt warning for the front seats

If the driver or front passenger seat is occupied by an adult, an acoustic warning will be emitted if the seat belts are not fastened at the start of a journey and the vehicle reaches a speed of more than approximately 25 km/h (approximately 15 mph) or if the seat belts are unfastened while the vehicle is in motion. The red warning lamp also flashes on the instrument cluster display.

The red warning lamp does not go out until all occupants have fastened their seat belts when the ignition is switched on.

Seat belt warning for the rear seats (depending on country and equipment)

Fig. 1 On the instrument cluster display: seat belt warning for the rear seats (illustration).

After the ignition has been switched on, the seat belt warning system for the rear seats → *Fig. 1* on the instrument cluster display shows the driver whether the adult rear seat passengers have fastened their seat belts.

The green symbol indicates that the passenger on this seat has fastened their seat belt.

The red symbol indicates that the passenger on this seat has not fastened their seat belt.

The white symbol indicates that this seat is not occupied.

If a seat belt for one of the rear seats is unfastened while the vehicle is in motion, the symbol will light up red for this seat. The red warning lamp also flashes on the instrument cluster display. If the vehicle is travelling faster than approximately 25 km/h (approximately 15 mph), an acoustic signal will also be given.

WARNING

The seat belt warning system is designed to detect adult persons. If a seat is occupied by lighter persons, in particular children, the detection will not be reliable. The seat belt warning system also does not respond or responds only in a limited way if child seats and seat pads are used. As a result, the system may not be able to detect when lighter persons and children have not fastened their seat belts and this can lead to them suffering serious or fatal injuries in the event of an accident.

- Always ensure that all vehicle occupants, especially children, have fastened their seat belts properly.

Fastening and unfastening seat belts

Fastening the seat belt

Fig. 1 Inserting the seat belt latch plate into the buckle (illustration).

1. Adopt correct sitting position *(→ Sitting position)*.
2. Take hold of the belt and pull it evenly across your chest and pelvis. Do not twist the belt when doing this *(→ Seat belt routing)*.
3. Insert the latch plate securely into the buckle belonging to the occupied seat → *Fig. 1*.
4. Pull on the seat belt to ensure that the latch plate is securely locked in the buckle.

Unfastening the seat belts

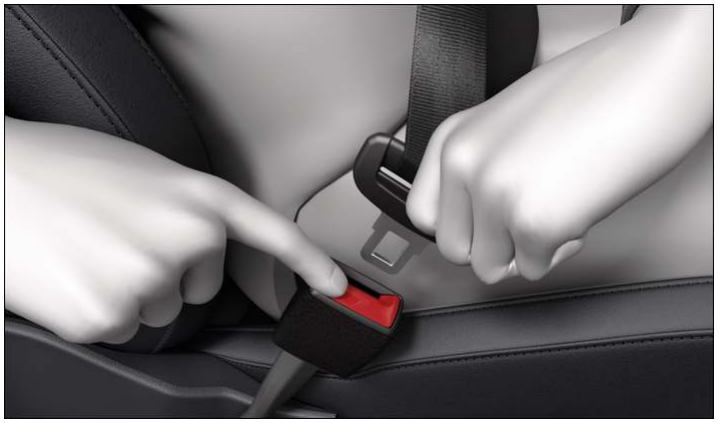

Fig. 2 Removing the latch plate from the buckle (illustration).

Unfasten seat belts only when the vehicle is stationary *(→ Seat belt routing)*.

1. Press the red button in the buckle → *Fig. 2*.

   The latch plate is released and springs out.
2. Guide the belt back by hand so that it rolls up easily, without twisting the seat belt and without damaging the trim.

Twisted seat belt

If it is difficult to remove the seat belt from the belt guide, the seat belt may have become twisted if it was returned too quickly into the side trim:

1. Take hold of the latch plate then slowly and carefully pull out the seat belt.
2. Untwist the seat belt and guide it back slowly by hand.
3. Fasten the seat belt even if you are unable to undo the twist.

   However, the twist should not be in part of the seat belt that comes into direct contact with the body.
4. Go immediately to a suitably qualified workshop in order to have the twist undone. Volkswagen recommends using an authorised Volkswagen repairer.

Seat belt routing

Seat belts only provide an optimum level of protection during an accident when they are routed correctly. Correct seat belt routing reduces the risk of severe or fatal injuries. Correct seat belt routing also holds the vehicle occupants in position so that an inflating airbag can offer the maximum level of protection. Therefore you must always fasten your seat belt and ensure that the seat belt routing is correct → *Fig. 1*.

Correct seat belt routing

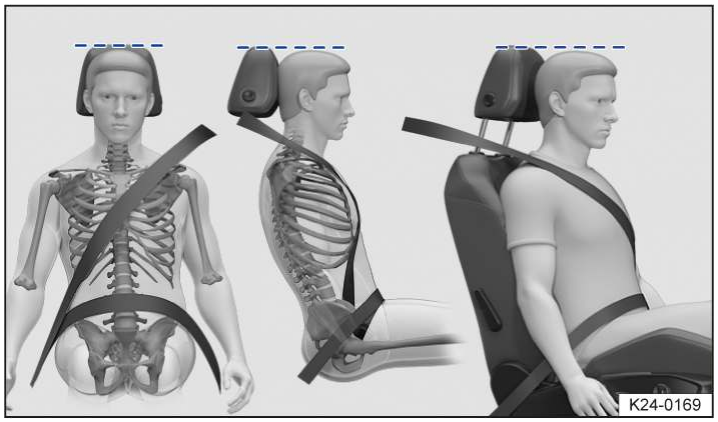

Fig. 1 Correct seat belt routing and head restraint adjustment (illustration).

— The shoulder belt must always lie on the centre of the shoulder, never across the neck, over or under the arm or behind the back.

— The lap belt must always lie across the pelvis, never across the stomach.

— The seat belt must always lie flat and snugly on the body. Tighten the belt if necessary.

Correct seat belt routing during pregnancy

Fig. 2 Correct seat belt routing during pregnancy (illustration).

For pregnant women, the seat belt must be positioned evenly over the chest and as low as possible over the pelvis. It must lie flat so that no pressure is exerted on the lower body – this applies for the entire course of the pregnancy → *Fig. 2*.

Correct seat belt routing according to height

The following equipment can be used to adjust the seat belt routing:

— Height-adjustable front seats *(→ Sitting position)*.

WARNING

Incorrect seat belt routing can cause serious injuries in the event of an accident or a sudden braking or driving manoeuvre.

- Make sure that the seat belt routing is correct.
- Adjust the backrest to an upright position and fasten the seat belt correctly corresponding to your body size in order to achieve the optimum protective effect of the seat belts.
- Route the shoulder section of the seat belt over the centre of the shoulder and never under the arm or across the neck.
- Route the seat belt so that it lies flat and snugly on the upper body and pelvis. Pull the belt a little again to tighten it if necessary.
- Make sure that the lap part of the belt is routed in front of your pelvis and never over your stomach.
- If you are pregnant, make sure that the seat belt is routed evenly over your chest and as low as possible over your pelvis and so that it lies flat during the entire course of the pregnancy. In this way, no pressure is exerted on the lower abdomen.
- Do not twist the belt when fastening or wearing the seat belt.
- Never hold the seat belt away from your body with your hand.
- Do not route the belt over hard or fragile objects, such as glasses, pens or keys.
- Never change the belt routing by means of belt clips, retaining eyes or similar.

If a person's physical build prevents them from routing the seat belt properly, contact a suitably qualified workshop to find out about any special modifications so that the seat belts and airbags can provide the optimum level of protection. Volkswagen recommends using an authorised Volkswagen repairer.

Belt retractor, belt tensioner, belt tension limiter

The seat belts in the vehicle are part of the vehicle safety concept . The vehicle safety concept has the following important functions:

Belt retractor

The seat belts on the front seats and the outer rear seats (also on the middle rear seat, depending on equipment) are equipped with a belt retractor on the shoulder section of the belt. Full freedom of movement is ensured when the shoulder belt is pulled slowly or when the vehicle is travelling at normal speeds. However, if the belt is pulled out quickly or during sudden braking, during travel in mountains or bends and during acceleration, the belt retractor blocks the seat belt.

Fastened seat belts on the front seats may be tensioned automatically by the proactive occupant protection system in critical situations, for example during an emergency stop or in the event of oversteering or understeering. Both seat belts are slackened again if the accident does not happen, or when the critical situation has passed. The proactive occupant protection system is ready to be triggered again .

Belt tensioner

The seat belts for the front seat vehicle occupants and, depending on equipment, on the outer rear seats are equipped with belt tensioners.

The belt tensioners are activated by sensors and tighten the seat belts during severe frontal, side and rear collisions and also possibly vehicle rollovers. Any slack in the seat belt is tightened. This can reduce the forward movement of the vehicle occupants and their movement in the direction of the impact. The belt tensioner works together with the airbag system. If the vehicle rolls over, the belt tensioner will only be activated if the curtain airbags are triggered.

A fine dust may be produced when the airbags are triggered. This is quite normal and does not mean that there is a fire in the vehicle.

WARNING

The protective function of the belt tensioners permits only one activation of the belt tensioners. The system must be replaced if the belt tensioners have been triggered.

- Belt tensioners that have been triggered, and any affected system parts, must be replaced immediately with new parts that are approved by Volkswagen for the vehicle.
- Have repairs and modifications to your vehicle carried out only by a suitably qualified workshop. Suitably qualified workshops have the necessary tools, diagnostic equipment, repair information and qualified personnel. Volkswagen recommends using an authorised Volkswagen repairer.
- Never install recycled belt tensioner components or components that have been taken from end-of-life vehicles in your vehicle.
- Never modify any components of the belt tensioners.

Belt pre-tensioning

At the beginning of every journey, the belt is automatically pre-tensioned and the belt slack minimised when the driver or front passenger seat belt is fastened, depending on the driving time and vehicle speed .

Reversible belt tensioning (proactive occupant protection system)

Reversible belt tensioning may trigger in certain driving situations . Examples include:

— Strong braking.

— Oversteer or understeer.

— Minor collisions.

The reversible belt tensioners may remain continuously tensioned after certain driving situations. In this case, the seat belts must be manually unfastened when the vehicle is stationary and then fastened correctly again in order to release the belt tensioning.

Belt tension limiter

The seat belts for the front seat vehicle occupants and on the outer rear seats are equipped with belt tension limiters.

The belt tension limiter reduces the pressure exerted by the seat belt on the body during an accident.

Observe all safety requirements when the vehicle or components of the system are scrapped. These requirements are known to the suitably qualified workshops *(→ Belt tensioner)*. Volkswagen recommends using an authorised Volkswagen repairer.

Service and disposal of belt tensioners

Seat belts may become damaged during work on the belt tensioners or while removing or installing vehicle parts in conjunction with other repair work. This damage will not always be noticeable. As a result, the belt tensioners may not function correctly or may not function at all in the event of an accident.

Regulations must be observed to ensure that the effectiveness of the belt tensioner is not reduced and that removed parts do not cause any injuries or environmental pollution. These requirements are known to suitably qualified workshops. Volkswagen recommends using an authorised Volkswagen repairer.

WARNING

The risk of severe or fatal injuries may be increased if the seat belts, automatic belt retractors and belt tensioners are not used correctly, or if they are repaired by a non-professional. As a result, the belt tensioners may not be triggered when they should, or they may be triggered unexpectedly.

- Never carry out any repairs, adjustments or removal and refitting of parts in the belt tensioners or seat belts by yourself, and have such work carried out only by a suitably qualified workshop . Volkswagen recommends using an authorised Volkswagen repairer.
- Seat belts, belt tensioners and automatic belt retractors cannot be repaired. They must be replaced.

The airbag modules and belt tensioners may contain perchlorate. Observe the legal requirements for disposal.

Introduction to the topic

The proactive occupant protection system is an assistance system that initiates action to protect vehicle occupants in dangerous situations. However, the system cannot prevent a collision.

Speed range

The basic function of the proactive occupant protection system is available when driving forwards at speeds from approx. 30 km/h (19 mph).

Displays

In the event of intervention by the proactive occupant protection system, the red warning lamp lights up on the instrument cluster display.

WARNING

The proactive occupant protection system is not a substitute for the full attention of the driver and operates only within the limits of the system. The proactive occupant protection system cannot detect all driving situations and may not react or may react with a delay or in an undesired way. If you do not pay due attention, there is a risk of accidents and serious or even fatal injuries.

- Always pay due attention and do not rely exclusively on the system. The driver is always responsible for all driving tasks.
- Observe the system limits *(→ Proactive occupant protection system)*.
- Adapt your speed and the distance from the vehicles ahead to suit visibility, weather, road and traffic conditions.

Functions of the proactive occupant protection system

Basic functions

At the beginning of every journey, the belt is automatically pre-tensioned and the belt slack minimised when the driver or front passenger seat belt is fastened, depending on the driving time and vehicle speed.

The following functions may be triggered individually or together in critical driving situations, e.g. in the event of emergency braking, understeer and oversteer or minor collisions:

— Reversible belt tensioning of the fastened driver and front passenger seat belts.

— Depending on the vehicle equipment, automatic closing of the side windows down to a small gap.

— Activation of the hazard warning lights.

The belts may be tensioned individually or together depending on the respective critical driving situations.

Additional functions for vehicles with Automatic Emergency Braking (Front Assist)

For vehicles with Automatic Emergency Braking (Front Assist), the system limits also include calculation of the probability of a rear-end collision with the vehicle in front. If the system detects that a rear-end collision is likely, or initiates severe braking, it can trigger the proactive occupant protection system.

Additional functions for vehicles with semi-automated vehicle assistance in a medical emergency (Emergency Assist)

In vehicles with semi-automated vehicle assistance in a medical emergency (Emergency Assist), the proactive occupant protection system may be triggered if no driver activity is detected.

Depending on the activation level, the following functions are triggered:

— Reversible belt tensioning of the driver’s fastened seat belt for a brief or extended period of time.

— Depending on the vehicle equipment, automatic closing of the side windows down to a small gap.

Setting in driving profile selection

In vehicles with driving profile selection, the proactive occupant protection system is adapted to the special vehicle setup of the respective driving profile.

Limits of the proactive occupant protection system

The availability of the proactive occupant protection system depends on country-specific legal regulations and the vehicle equipment.

The proactive occupant protection system will not be available, or will only be available to a limited extent, in the following situations:

— Malfunction of the ESC, reversible belt tensioners or airbag control unit .

— TCS deactivated or ESC restricted .

— Automatic Emergency Braking (Front Assist) is restricted or has a system fault.

— Emergency Assist is restricted or has a system fault.

— Reverse gear is engaged.

— In the case of reflective objects, e.g. crash barriers, tunnel entrances, heavy rain or icing-up.

— In the case of animals or objects that are difficult to detect.

Troubleshooting

Proactive occupant protection system functions restricted or not available

The yellow indicator lamp lights up briefly. In addition, a message may be displayed in the instrument cluster.

The proactive occupant protection system functions are restricted or the system is not available.

1. Deactivate and reactivate the vehicle's drive system.
2. If the fault persists, go to a suitably qualified workshop and have the proactive occupant protection system checked. Volkswagen recommends using an authorised Volkswagen repairer.

Depending on the malfunction, additional information may be displayed in the vehicle status *(→ Vehicle settings menu)*.

Introduction to the topic

Airbags cannot replace seat belts, which must be worn at all times.

Airbags are only able to offer additional safety for vehicle occupants if the seats, seat belts, head restraints and – in the case of the driver – steering wheel are adjusted and used correctly.

Visible damage to the vehicle does not always mean that the airbag should have been triggered.

Situations in which the airbags will not necessarily be triggered:

— When the ignition is switched off during a collision.

— In the case of light front-end collisions.

— In the case of a slight side collision.

— In the case of a rear-end collision.

— If the rotational speed measured by the control unit is too low in the event of a vehicle rollover.

— In the case of low-speed collisions.

A triggered airbag may cause injuries, such as swelling, bruising, burning and grazing.

⚠ WARNING

The risk of injury increases if there are any objects between the vehicle occupants and the deployment zones of the airbags when they are triggered as these objects will change the airbag deployment zone. The objects could enter the deployment zone of the airbags during sudden braking or driving manoeuvres or in the event of accidents and then be flung dangerously through the vehicle interior if the airbags are triggered.

- Never hold any objects in your hand or on your lap while the vehicle is in motion.
- Never transport any objects on the front passenger seat.

⚠ WARNING

Airbags no longer work effectively after being triggered and must be replaced. Without the protection offered by airbags, the risk of injury increases in the event of sudden braking or driving manoeuvres or accidents.

- Airbags that have been triggered, and any affected system parts, must be replaced immediately with new parts that are approved by Volkswagen for the vehicle.
- Have repairs and modifications to your vehicle carried out only by a suitably qualified workshop. Suitably qualified workshops have the necessary tools, diagnostic equipment, repair information and qualified personnel. Volkswagen recommends using an authorised Volkswagen repairer.
- Never install recycled airbag components or components that have been taken from end-of-life vehicles in your vehicle.
- Never alter components of the airbag system.

⚠ WARNING

Fine dust particles or steam may be released when the airbags are triggered. This is normal and does not mean that there is a fire in the vehicle. The fine dust can cause irritation to the skin and eye membranes and cause breathing difficulties, particularly for people suffering from asthma or people who have (had) other respiratory problems.

- To help reduce breathing difficulties, get out of the vehicle or open the windows or doors for more fresh air.
- If you come into contact with the dust, you should wash your hands and face with a mild soap and water before eating.
- Rinse out your eyes and any open wounds with water if dust has got into them.

⚠ WARNING

Cleaning agents that contain solvents will cause the surface in the area of the airbag fitting locations to become porous. In an accident that results in triggering of the airbags, loose plastic parts can be propelled through the vehicle interior and cause serious injury.

- Never clean the dash panel or the surfaces in the area of the airbag fitting locations with cleaning agents that contain solvents.

Indicator lamp

Functional check

The yellow indicator lamp in the instrument cluster display lights up briefly as a functional check when the ignition is switched on and goes out after a few seconds.

Fault in airbag or belt tensioner systems

The yellow indicator lamp lights up continuously. In addition, a message may be displayed in the instrument cluster.

A malfunction has been detected in at least one airbag or belt tensioner.

1. Remove the child seat from the front passenger seat and install it on the rear seats.
2. Go to a suitably qualified workshop and have the airbag and belt tensioner systems checked. Volkswagen recommends using an authorised Volkswagen repairer.

Airbag system or belt tensioner systems switched off with diagnostic tool

The yellow indicator lamp lights up for around 4 seconds when the ignition is switched on and then flashes for around 12 seconds. In addition, a message may be displayed in the instrument cluster.

At least one airbag or belt tensioner was switched off with a diagnostic tool.

1. Go to a suitably qualified workshop and have a check carried out to establish whether the airbag or belt tensioner systems must remain switched off. Volkswagen recommends using an authorised Volkswagen repairer.

Fitting locations and deployment zones of the airbags

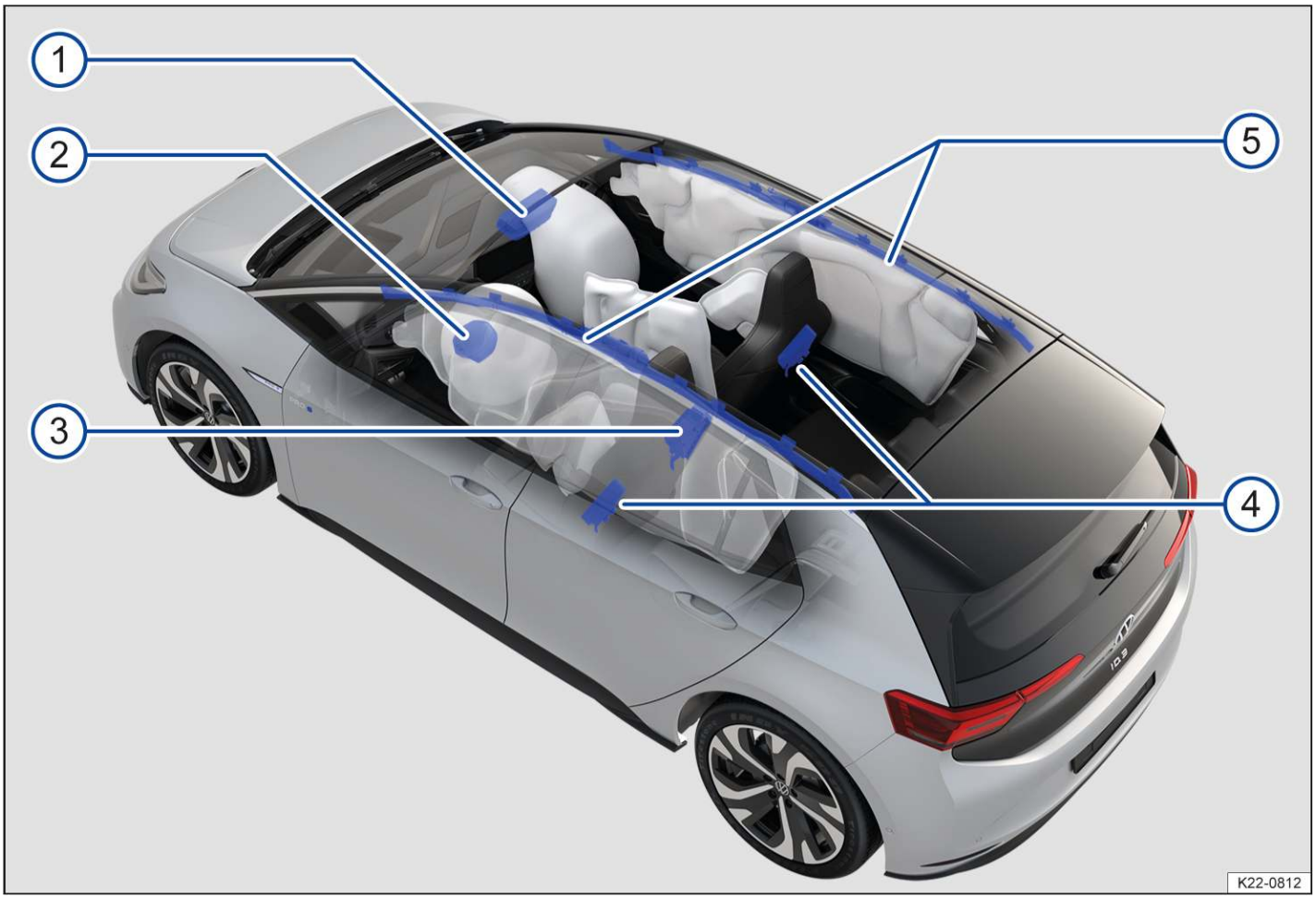

Fig. 1 Fitting locations and deployment zones of the airbags.

Location

1. Front passenger front airbag in the dash panel.
2. Driver front airbag in the steering wheel.
3. Centre airbag in the driver seat backrest.
4. Front side airbags in the driver seat and front passenger seat backrests.
5. Curtain airbags above the front and rear side windows (both sides).

The airbag locations are identified by the text “AIRBAG”.

The white areas in the illustration are covered by the airbags when deployed (deployment zone) → *Fig. 1*. You must never leave or attach any objects in these areas → ⚠.

⚠ WARNING

Once triggered, an airbag inflates in milliseconds at very high speed. This could cause objects to be flung through the vehicle interior. This can cause serious injuries.

- Always leave the deployment zones of the airbags clear.
- Never secure any items to the covers or in the deployment zones of the airbags.
- Do not stick anything on or cover the locations of the airbags or the surfaces in the deployment zones of the airbags or modify these components in any way.
- No other people, animals or objects may be carried between the occupants and the airbag deployment zones. Ensure that children and other passengers in the vehicle also keep to this rule.
- Do not attach any objects, e.g. mobile navigation devices, to the windscreen above the front airbag on the front passenger side.
- Only push the sun visors over to the side windows if no items are attached to the visors (e.g. pens or a garage door opener).
- Do not install any sun blinds onto the side windows unless they have been expressly approved for use in your vehicle.
- The coat hooks in the vehicle should be used only for lightweight clothing. Do not leave any heavy or sharp objects in the pockets.
- Do not fit any accessories to the doors.

⚠ WARNING

An incorrect seat position could hinder the proper function of the front airbag and cause serious injury.

- Always hold the steering wheel with both hands at the sides on the rim in the nine o’clock and three o’clock positions while driving.
- Adjust the driver seat so that there is at least 25 cm (approximately 10 inches) between the driver’s rib cage and the hub of the steering wheel. If your build makes it impossible to fulfil this requirement, then you must contact a suitably qualified workshop. Volkswagen recommends using an authorised Volkswagen repairer.
- Adjust the front passenger seat so that the distance between the passenger and the dash panel is as large as possible.

⚠ WARNING

Incorrect use of the seats could hinder the proper function of the airbags and cause serious injury.

- Never remove the front seats from the vehicle or alter any components of these seats.
- Do not exert excessive force on the seat backrest bolsters.
- Do not fit seat covers or protective covers over the seats unless they have been expressly approved for use in the vehicle.
- Have any damage to the seat covers or around the seams of the airbags repaired immediately by a suitably qualified workshop. Volkswagen recommends using an authorised Volkswagen repairer.

Switching the front passenger front airbag on and off

Fig. 1 In the dash panel on the front passenger side: key-operated switch for switching the front airbag on the front passenger side on and off.

The front passenger front airbag must be switched off if you fit a rear-facing child seat on the front passenger seat.

Observe the country-specific specifications for use of child seats on the front passenger seat *(→ Child seats)*.

Switch off of the front passenger front airbag is not available in all countries. If there is no key-operated switch in the vehicle, the front passenger front airbag can only be deactivated by a suitably qualified workshop. Volkswagen recommends using an authorised Volkswagen repairer.

Front passenger front airbag switched on

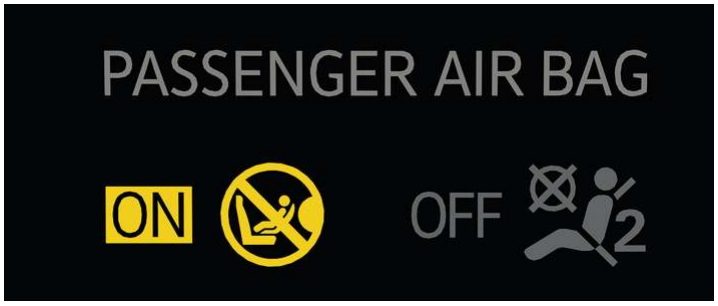

Fig. 2 In the roof console: indicator lamp for switched on front passenger front airbag.

ON The yellow indicator lamp for the switched on front passenger front airbag lights up for around 60 seconds after the ignition has been switched on or after switching on the front passenger front airbag with the key-operated switch *→ Fig. 2* and then switches off again automatically.

The front passenger front airbag has been switched on.

1. Check whether the front passenger front airbag must remain switched on.

Front passenger front airbag switched off

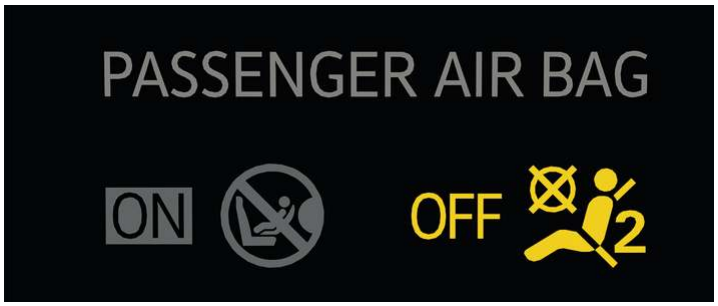

Fig. 3 In the roof console: indicator lamp for switched off front passenger front airbag.

OFF The yellow indicator lamp lights up continuously → *Fig. 3*. The front passenger front airbag has been switched off.

1. Check whether the front passenger front airbag must remain switched off, e.g. when using a child seat on the front passenger seat.

Switch on the front passenger front airbag

1. Switch off the ignition.
2. Open the door on the front passenger side.
3. Fold the key bit of the vehicle key all the way out.

   Or: remove the emergency key from the vehicle key *(→ Vehicle key)*.
4. Insert the key bit into the key-operated switch until you feel the second point of resistance → *Fig. 1*.

   The key bit is not fully inserted when doing this →.
5. Turn the vehicle key or emergency key without using force to the position ON.
6. Remove the vehicle key from the key-operated switch and fold away the key bit →.

   Or: remove the emergency key from the key-operated switch and insert it back into the vehicle key →.
7. Close the door on the front passenger side.

   The yellow PASSENGER AIR BAG indicator lamp ON lights up and goes out after approximately 60 seconds *(→ Indicator lamp for standard airbag system)*.
8. Check that the yellow PASSENGER AIR BAG OFF indicator lamp does *not* light up when the ignition is switched on *(→ Indicator lamp for standard airbag system)*.

Switching off the front passenger front airbag

1. Switch off the ignition.
2. Open the door on the front passenger side.
3. Fold the key bit of the vehicle key all the way out.

   Or: remove the emergency key from the vehicle key *(→ Vehicle key)*.
4. Insert the key bit into the key-operated switch until you feel the second point of resistance → *Fig. 1*.

   The key bit is not fully inserted when doing this →.
5. Turn the vehicle key or emergency key without using force to the position OFF.
6. Remove the vehicle key from the key-operated switch and fold away the key bit →.

   Or: remove the emergency key from the key-operated switch and insert it back into the vehicle key →.
7. Close the door on the front passenger side.

   The yellow PASSENGER AIR BAG OFF indicator lamp lights up continuously when the ignition is switched on *(→ Indicator lamp for standard airbag system)*.

Confirmation that the front passenger front airbag has been switched off

A switched off front passenger front airbag is indicated only by the PASSENGER AIR BAG OFF indicator lamp lighting up yellow continuously *(→ Indicator lamp for standard airbag system)*.

If the front passenger front airbag is switched off and the yellow PASSENGER AIR BAG indicator lamp OFF does not light up continuously or lights up together with the yellow indicator lamp in the instrument cluster display, there may be a fault in the airbag system. For this reason, do not fit a child restraint system on the front passenger seat for safety reasons. The front passenger front airbag may trigger during an accident →⚠.

⚠ DANGER

Observe the important safety instructions for the front passenger front airbag *(→ Child seats)*.

⚠ DANGER

If the airbag is deactivated, people on the front passenger seat may be severely or fatally injured in the event of an accident. For this reason, the front passenger front airbag must be deactivated only in special cases.

- Switch the front passenger front airbag off only if, in exceptional circumstances, a rear-facing child seat is secured on the front passenger seat. As soon as the rear-facing child seat on the front passenger seat is no longer being used, switch the front passenger front airbag on again.
- Only deactivate the front passenger front airbag if, in exceptional circumstances, the front passenger seat backrest is folded forwards (depending on the vehicle equipment). Reactivate the front passenger front airbag as soon as the front passenger seat backrest is folded back again.
- To prevent damage to the airbag system, switch the front passenger front airbag on and off only when the ignition is switched off.
- As the driver, always make sure that the key-operated switch is in the correct position.

⚠ WARNING

If there is a fault in the airbag system, the airbag may not trigger correctly, may not trigger at all or may trigger unexpectedly. This can cause severe or fatal injuries.

- In the event of a fault, have the airbag system checked immediately by a suitably qualified workshop. Volkswagen recommends using an authorised Volkswagen repairer.
- If there is a fault in the airbag system, never install a child seat on the front passenger seat and remove any child seats that are installed.

⚠ WARNING

If the vehicle key or the manual key is left in the key-operated switch after activating or deactivating the front passenger airbag, closing the front passenger door can cause damage to the vehicle and the status of the front passenger airbag can change unintentionally, which can cause serious or fatal injuries.

- Always remove the vehicle key or manual key from the key-operated switch immediately after use.

NOTICE

If the key bit is not inserted far enough, the key switch could be damaged when the key is turned.

- Insert the key bit into the key-operated switch up to the second point of resistance.

Introduction to the topic

Child seats reduce the risk of injury in the event of an accident. You should therefore always transport children younger than 12 years of age or under 150 cm (about 4 ft 11 in) in height in child seats.

For safety reasons, child seats must always be fitted to the rear seats *(→ Child seats)*.

Volkswagen recommends child seats from the Volkswagen range of accessories. These child seats have been developed and approved for use in Volkswagen vehicles.

For further information on the child seats from the range of accessories, contact an authorised Volkswagen repairer or visit the Volkswagen website.

Country-specific regulations

The standards and regulations governing the use of child seats and child seat securing mechanisms differ from country to country. Not all countries allow you to transport children on the front passenger seat. Regulations and legal requirements take precedence over the information given in this owner's manual.

WARNING

Unsecured or inadequately secured children can suffer serious or fatal injuries and cause serious or fatal injuries to others in the event of a sudden driving or braking manoeuvre and in an accident.

- Always transport children younger than 12 years of age or under 150 cm (about 4 ft 11 in) in height in a suitable child seat while the vehicle is in motion. Regulations in some countries may differ and must be complied with.
- Always secure children in the vehicle in a suitable child seat. The child seats used must be appropriate to the child's height, weight and age.
- Observe the specifications of the child seat manufacturer when installing the child seat in the vehicle and securing the child in the child seat.
- Never fasten more than one child into one child seat.
- Under no circumstances should children or babies be held in a passenger's or drivers lap while driving.
- Never leave a child unsupervised in a child seat.
- Never allow a child to be carried in a vehicle without being properly secured, and never allow a child to stand up or to kneel on a seat, or to sit incorrectly while the car is in motion.
- The child seat can only provide maximum protection if the seat belt is routed correctly around it. Always ensure that the seat belt is routed as specified in the instructions provided by the child seat manufacturer. If the seat belts are not worn correctly this can cause injuries even in a minor accident.
- After an accident, it is vital to replace any child seats that were in use during the accident, as they could have sustained non-visible damage.
- Do not use child seats that must be secured in the vehicle with the lower tethers according to the child seat manufacturer's instructions for use.

Please observe the notes and information for vehicles with N1 approval *(→ N1 approval)*.

Information on the child seat and in the vehicle

Standards for child seats

Regulations ECE-R 44 or ECE-R 129 apply to child seats in the user states. Both regulations apply simultaneously. Child seats which have been tested in accordance with these standards carry an orange ECE approval label. This ECE approval label may include the following information on the child seat:

— Weight class/child seat group.

— Size class.

— Approval category (universal, semi-universal, vehicle-specific or i-Size).

— Approval number.

On child seats that are approved under regulation ECE-R 44, the eight-digit approval number on the ECE approval label must begin with 03 or 04.

Child seats according to weight or size classes

Not every child will fit in the child seat specified for their weight group. Likewise, not every seat will fit in every vehicle. Therefore it is vital to check that the child fits properly in their child seat and that the child seat can be securely fastened in the vehicle.

Fig. 1 Example illustrations of child seats.

Group	Child's weight	Child's height
Group 0	up to 10 kg	45 to 75 cm
Group 0+	up to 13 kg	45 to 87 cm
Group 1	9 to 18 kg	rear-facing: 61 to 105 cm
		forward-facing: 76 to 105 cm
Group 2	15 to 25 kg	100 to 135 cm
Group 3	22 to 36 kg	125 to 150 cm

Volkswagen recommends using a child seat with a backrest when using child seats in groups 2 and 3 for children from a height of 100 cm.

Children up to 105 cm in height should be transported in rear-facing seats if possible.

Fig. 2 Child seat with additional belt guide (illustration).

When using a Group 2 child seat or a child seat for children from a height of 100 cm (3 ft 3 in) with backrest, Volkswagen recommends using the additional belt guide on the child seat for the seat belt in the pelvic area, if available → *Fig. 2*. Please observe the instructions for use of the child seat manufacturer.

Airbag sticker

Fig. 3 On the sun visor: airbag label (illustration).

Fig. 4 On the B-pillar: airbag label (illustration).

The vehicle may be provided with stickers giving important information about the front passenger front airbag. The information on these stickers may vary from country to country. The stickers may be found:

— On the driver sun visor and in some cases on the front passenger sun visor → *Fig. 3*.

— On the B-pillar on the front passenger side → *Fig. 4*.

It is essential to observe the warning information before installing a rear-facing child seat → ⚠, , , .

Information on fitting a child seat

Observe the following general information when fitting a child seat. This information is relevant whatever child seat securing system is being used.

— Read and follow the instructions for use provided by the child seat manufacturer → ⚠.

— Whenever possible, fit the child seat on the rear bench seat behind the front passenger seat so that children can exit the vehicle on the kerb side.

— Deactivate the front passenger front airbag if fitting a rear-facing child seat on the front passenger seat.

— When fitting on the front passenger seat, push the front passenger seat back fully and adjust the seat to the highest position. Move the backrest to upright position and adjust the seat cushion so that it is tilted fully down if necessary *(→ Front seat, mechanical)*.

— Always ensure that there is enough space around the child seat. If necessary, adjust the position of the seat in front. When doing so, ensure that the driver or front passenger can still maintain a correct sitting position *(→ Sitting position)*.

— The backrest of the child seat must lay as flat as possible against the vehicle seat backrest. If required, adjust the seat backrest angle so that the child seat lies flush against the backrest. Once it has been installed, if the child seat is touching the head restraint and therefore cannot be positioned flush against the backrest, push the head restraint all the way up, or remove and stow safely in the vehicle .

— The settings of the respective seat must no longer be adjusted after correct installation of the child seat. If the seat settings have been adjusted, installation of the child seat must be checked and adapted if necessary.

— If a child seat is used on a seat, no functions must be used on this seat, e.g. the massage function *(→ Massage function)* or seat heating *(→ Seat climate control)*.

⚠ DANGER

Observe the important safety instructions for the front passenger front airbag *(→ Airbag system)*.

⚠ WARNING

Child seats present a risk of injury if incorrectly installed.

- Observe the instructions of the child seat manufacturer for securing the child seat in the vehicle.

⚠ WARNING

A triggered curtain or side airbag can cause injuries.

- Ensure that no children are seated within the airbag deployment zones .
- Do not place any objects in the airbag deployment zones.

⚠ WARNING

Child restraint anchorages are designed to withstand only those loads imposed by correctly fitted child restraints. Under no circumstances are they to be used for adult seatbelts, harnesses, or for attaching other items or equipment to the vehicle.

ℹ Some child seats are not suitable for use on the front passenger seat. The child seat must be specially authorised by the manufacturer for use on the front passenger seat in vehicles with front and side airbags. Authorised Volkswagen repairers keep an up-to-date list of authorised child seats.

Rear-facing child seats on the front passenger seat

If you use a **rear-facing child seat**, the front passenger front airbag can cause critical or potentially fatal injuries when it inflates → ⚠.

Rear-facing child seats may be used on the front passenger seat only if the front passenger front airbag has been switched off . A switched off front passenger front airbag is indicated by means of the continuously lit yellow PASSENGER AIR BAG indicator lamp OFF in the driver's field of vision *(→ Indicator lamp for standard airbag system)*.

It is not possible to switch off the front passenger front airbag in all countries *(→ Airbag system)*.

⚠ DANGER

If you use a rear-facing child seat on the front passenger seat, the child sitting in it is at increased risk of sustaining serious or life-threatening injuries or being killed in the event of an accident.

- Never secure a rear-facing child seat to the front passenger seat if the front passenger front airbag is switched on.
- Deactivate the front passenger front airbag if you want to install a rear-facing child seat on the front passenger seat. If the front passenger front airbag cannot be deactivated, you must not use rear-facing child seats.
- In order to establish the maximum possible distance from the front passenger front airbag, move the front passenger seat as far back as possible and adjust to the highest position.
- Move the backrest to the upright position.
- Some child seats are not suitable for use on the front passenger seat. Only use child seats that have been approved by the child seat manufacturer for use on a front passenger seat with front and side airbags. Authorised Volkswagen repairers keep an up-to-date list of authorised child seats.

Forward-facing child seats on the front passenger seat

If using a **forward-facing child seat**, do not deactivate the front passenger front airbag. The front passenger front airbag can cause severe injuries when it inflates → ⚠.

⚠ WARNING

Using a forward-facing child seat on the front passenger seat presents a risk of injury.

- In order to establish the maximum possible distance from the front passenger front airbag, move the front passenger seat as far back as possible and adjust to the highest position.
- Move the backrest to the upright position.
- Only use forward-facing child seats that have been approved by the child seat manufacturer for use on a front passenger seat with front and side airbags.

Securing a child seat with ISOFIX/i-Size

ISOFIX and i-Size are standardised securing systems for fitting child seats in the vehicle quickly and safely. The ISOFIX or i-Size attachment system creates a rigid connection between the child seat and the car body.

The seat has two rigid attachment arms. The attachment arms engage in ISOFIX or i-Size anchor points between the seat cushion and backrest *(→ Child seat with ISOFIX or i-Size)*. A top tether or a support foot may sometimes have to be used in addition to the ISOFIX or i-Size anchor points described above.

This support foot or top tether help prevent the child seat tipping forward in a crash. Use child seats with a support foot only on the outer rear seats and on the front passenger seat →⚠.

If the child seat is fitted with a support foot, the foot must stand firmly on the floor of the vehicle.

⚠ WARNING

Incorrect use of the support foot can cause severe or fatal injuries.

- Ensure that the support foot is always correctly and safely installed.
- Always read and follow the installation instructions and warning information provided by the child seat manufacturer.
- Do not transport children in child seats with a support foot if the weight of the child seat, including the child, exceeds a total weight of 33 kg (around 73 lbs).

ℹ Volkswagen recommends securing child seats with ISOFIX/i-Size and top tether or with ISOFIX/i-Size and support foot.

Quick guide to ISOFIX and i-Size installation

The identification marking of the ISOFIX or i-Size anchor points is equipment and country dependent.

I-Size anchor points are not available on the front passenger seat in some countries.

The following table shows the installation options for ISOFIX or i-Size child seats at the ISOFIX or i-Size anchor points of the individual seats.

Group	Orientation of the child seat	Size class /ISOFIX class	Front passenger seat		Outer rear seats	Centre rear seat
			Front passenger front airbag activated	Front passenger front airbag deactivated		
Group 0: up to 10 kg	Rear-facing	E/R1	X	IL-SU	IL-SU	X
Group 0+: up to 13 kg	Rear-facing	E/R1	X	IL-SU	IL-SU	X
		D/R2				
		C/R3				
Group 1: 9 to 18 kg	Rear-facing	D/R2	X	IL-SU	IL-SU	X
		C/R3				
	Front-facing	B/F2	IL-SU, IUF	X	IL-SU, IUF	X
		B1/F2X				
		A/F3				
Group 2: 15 to 25 kg	Front-facing	–	IL-SU	X	IL-SU	X
Group 3: 22 to 36 kg	Front-facing	–	IL-SU	X	IL-SU	X
i-Size child restraint system	Rear-facing	–/R2	X	i-U	i-U	X
	Front-facing	–/B2, F2X	i-U	X	i-U	X
Booster seat	Front-facing	–/B2, B3	i-B	X	i-B	X

— **Size class**: the size class shown corresponds to the permissible weight range of the child using the seat. The size class is indicated on the ECE approval label for child seats with “universal” or “semi-universal” approval. A size class indication is affixed to the child seat.

— **X**: seat not suitable for securing an ISOFIX or i-Size child seat in this group.

— **IL-SU**: seat suitable for installing an ISOFIX child seat with “semi-universal” approval. Refer to the vehicle list supplied by the child seat manufacturer.

— **IUF**: seat suitable for installing an ISOFIX child seat with “universal” approval.

— **i-U**: seat suitable for installing a front-facing or rear-facing i-Size child seat with “universal” approval.

— **i-UF**: seat suitable for installing a front-facing i-Size child seat with “universal” approval.

— **i-B**: seat suitable for installing a front-facing ISOFIX booster seat of Group 2/3 as well as a front-facing i-Size child seat for children with a height of 100 to 150 cm (around 3 ft 3 in to around 4 ft 11 in).

Installing child seats with ISOFIX or i-Size

The location of the bottom anchor points is indicated by either an ISOFIX or i-Size symbol.

Markings identifying the ISOFIX anchor points for child seats on the rear seats.

Markings identifying the i-Size anchor points for child seats on the rear seats and on the front passenger seat.

Fig. 1 Fitting a child seat with attachment arms (illustration).

1. Observe the instructions *(→ Child seats)*.
2. If necessary, fold down any protective caps that are fitted on the ISOFIX or i-Size anchor points.
3. Push the attachment arms of the child seat in the direction of the arrow onto the ISOFIX or i-Size anchorages → *Fig. 1*. The child seat must click and audibly securely into place.
4. Perform a pull test on both sides of the child seat to make sure that the child seat is properly engaged.

Securing child seats with the top tether

Fig. 1 On the rear of the rear seats: top tether anchor points for top tether.

Fig. 2 On the rear of front passenger seat (country-dependent): attached top tether.

ISOFIX child seats with “universal” approval must be secured with an upper strap (top tether) in addition to the ISOFIX anchor points.

Secure the top tether only at the top tether anchor points provided for this purpose. The anchor points suitable for use with the top tether are marked by a symbol and sometimes also with “TOP TETHER” → *Fig. 1* or → *Fig. 2*.

Securing the top tether

Fig. 3 On the rear of the outer rear seats or front passenger seat: attached top tether.

Fig. 4 In the backrest of the premium sport seat (with opening) on the front passenger side: routing for the top tether (illustration).

1 Opening for routing the top tether.

Fig. 5 In the backrest of the premium sport seat (without opening) on the front passenger side: routing for the top tether (illustration).

1. Observe the instructions *(→ Child seats)*.
2. Remove the luggage compartment cover if necessary.
3. Position the child seat in the centre of the seat cushion.
4. Push the attachment arms on the child seat into the ISOFIX anchor points in the direction of the arrow *(→ Child seat with ISOFIX or i-Size)*. The child seat must click and audibly securely into place.
5. If necessary, push the head restraint upwards and route the top tether of the child seat under the head restraint to the rear.

   Or: remove the head restraint if necessary and route the top tether of the child seat over the backrest to the rear.

   Applies only to the premium sport seat with opening: Feed the top tether through the opening in the backrest → *Fig. 4* (1).

   Applies only to the premium sport seat without opening: Route the top tether over the head restraint → *Fig. 5*.
6. Hook the top tether of the child seat into the corresponding anchor point marked with "Top Tether" → *Fig. 3*.
7. Tighten the top tether so that the child seat is positioned against the upper section of the rear seat backrest.
8. Perform a pull test on the child seat to check that the child seat is properly engaged.

⚠ WARNING

If the top tether is not secured properly or is not secured at the anchor points provided for this purpose, the child seat can become detached and cause serious injuries.

- Always secure only one top tether of a child seat to one top tether anchor point.
- Secure the top tether only at the top tether anchor points provided for this purpose. Never secure the top tether of a child seat to a fastening ring.

⚠ WARNING

Objects in the rear pockets of the front passenger seat can damage the top tether in the event of an accident. This can result in serious injuries.

- Do not keep any objects in the rear pockets of the front passenger seat when using the top tether.

ℹ Depending on the country and equipment, there may be two or three top tether anchor points in the luggage compartment behind the rear seat backrest.

Securing a child seat using the seat belt

If you want to fit a child seat from the “universal” (u) approval category in your vehicle, you must first ensure that it is approved for the seat position in question. Relevant information is given on the orange ECE approval label of the child seat. Refer to the following table for the installation options.

Group		Child’s weight	Child’s height	Front passenger seat		Rear seats
				Front passenger front airbag activated	Front passenger front airbag deactivated	
Group 0		up to 10 kg	45 to 105 cm	x	u	u
Group 0+		up to 13 kg		x	u	u
Group 1	**Rear-facing**	9 to 18 kg		x	u	u
	Front-facing	9 to 18 kg	76 to 105 cm	u	x	u
Group 2		15 to 25 kg	100 to 150 cm	u	x	u
Group 3		22 to 36 kg		u	x	u

u: universal; x: seat not suitable for securing a child seat of this group.

Securing a child seat using the seat belt

1. Observe the instructions *(→ Child seats)*.
2. Fasten the seat belt and guide it through the child seat as described in the child seat manufacturer’s instructions.
3. Ensure that the seat belt is not twisted.
4. Insert the latch plate into the buckle for the appropriate seat and push it down until it audibly engages.

Child seats with the “semi-universal” approval category that are secured by means of a seat belt and support foot must not be installed on the centre rear seat.

Volkswagen recommends securing child seats with ISOFIX/i-Size and top tether or with ISOFIX/i-Size and support foot.

WARNING

Incorrect use of the support foot can cause severe or fatal injuries.

- Ensure that the support foot is always correctly and safely installed.
- Always read and follow the installation instructions and warning information provided by the child seat manufacturer.
- Do not transport children in child seats with a support foot if the weight of the child seat, including the child, exceeds a total weight of 33 kg (around 73 lbs).

Making you and your vehicle safe

Observe any legislation concerning the safety of a broken-down vehicle. For example, many countries stipulate that you have to switch on the hazard warning lights and wear a high-visibility waistcoat *(→ Emergency equipment)*.

Checklist of what to do in the event of a breakdown

To ensure your own safety and that of your passengers, observe the following points in the specified order:

1. Stop the vehicle at a safe distance away from moving traffic and on a suitable surface. Observe all the important information on parking .
2. Switch on the hazard warning lights ⚠ *(→ Driver side)*.
3. Ensure that all occupants exit the vehicle and go to a safe place away from moving traffic, e.g. behind the safety barrier. Observe country-specific regulations on high-visibility waistcoats.
4. Place the warning triangle in position to draw the attention of other road users to your vehicle.
5. Observe safety notes *(→ In the bonnet space)*.
6. Seek expert assistance if necessary. Volkswagen recommends using the Volkswagen emergency service.

When the hazard warning lights are switched on, for example if you are being towed, you can still indicate a change in direction or lane change by operating the turn signal. The hazard warning lights will be interrupted temporarily.

Comply with the important information on towing *(→ Tow-starting or towing)*.

⚠ WARNING

Any broken-down vehicle poses a high accident risk for the vehicle occupants and other road users.

- Stop the vehicle as soon as possible and when safe to do so.
- Park the car at a safe distance from moving traffic.
- Switch on the hazard warning lights.
- Never leave other persons alone in the vehicle, particularly children or people requiring assistance. This applies in particular when the doors are locked. People locked in the vehicle may be subjected to very high or very low temperatures.

NOTICE

Pushing the vehicle by hand can cause damage to the vehicle, e.g. deformation or detachment of add-on parts.

- When pushing the vehicle by hand, do not press on the tail light clusters, large panels and side or rear spoilers.

Checklist of what to do after an accident

To ensure your own safety and that of your passengers after an accident, observe the following actions in the specified order:

1. Switch off the ignition.
2. Switch on the hazard warning lights ⚠ *(→ Centre console)*.
3. Place the warning triangle in position to draw the attention of other road users to your vehicle.
4. Ensure that all occupants exit the vehicle and go to a safe place away from moving traffic, e.g. behind the safety barrier. Administer first aid and observe country-specific regulations on high-visibility waistcoats.
5. Report the accident to the fire service. Inform the fire service that the vehicle in question is an electric vehicle.
6. Wait for the emergency services at the scene of the accident.
7. Inform the emergency services and the persons involved at the scene of the accident that it is an electric vehicle.

Observe important information on what to do in the event of a fire *(→ Charging operations)*.

Switch on the hazard warning lights, e.g. in the following situations:

— When traffic ahead suddenly slows down or you reach the tail end of a traffic jam to warn vehicles behind you.

— When there is an emergency.

— If the vehicle breaks down.

— When the vehicle is being towed.

Always follow local regulations for the use of the hazard warning lights.

If the hazard warning lights are not working, you must use an alternative method of drawing attention to the broken-down vehicle. This method must comply with traffic legislation.

The 12-volt vehicle battery will discharge if the hazard warning lights are left on over a long period of time – even when the ignition is switched off.

Depending on the vehicle equipment, the brake lights flash in quick succession if you brake sharply or initiate full braking at a speed of more than 80 km/h (about 50 mph). This provides an especially conspicuous warning for the following traffic. If you then continue to brake, the hazard warning lights will be switched on automatically at speeds under approximately 10 km/h (6 mph). Once the vehicle starts to accelerate, the hazard warning lights will switch off again.

Emergency equipment

First-aid kit

Depending on country and the vehicle equipment, the first-aid kit may be located in a stowage compartment or a holder in the luggage compartment, under the luggage compartment floor or in the vehicle interior.

The first-aid kit must comply with legal requirements.

— Observe the expiry dates of the contents.

— After use, renew contents if necessary and stow the first-aid kit safely again.

Warning triangle

Fig. 1 In the boot lid: holder for the warning triangle.

Depending on the country and vehicle equipment, the warning triangle may be located in the boot lid → *Fig. 1*.

1. With the boot lid open, grasp the warning triangle storage box by the recess and turn by 90° towards the front of the vehicle.
2. Remove the storage box through the opening.
3. After use, stow the warning triangle back in the storage box and place the storage box into the holder.

The warning triangle must comply with legal requirements.

High-visibility waistcoat

Depending on country and the vehicle equipment, the high-visibility waistcoat may be located in a stowage compartment in the front door trim or in the glove compartment *(→ Driver door)* *(→ Front passenger side)*.

The high-visibility waistcoat must comply with legal requirements.

Fire extinguisher

Depending on country and the vehicle equipment, a fire extinguisher may be located in a holder in the footwell under the front passenger seat.

The fire extinguisher must meet legal requirements, be ready for use at all times and be checked on a regular basis (see seal of approval on the fire extinguisher).

⚠ WARNING

In the event of a sudden driving or braking manoeuvre or accident, loose objects could be flung though the vehicle and cause severe injuries.

- Always secure the first-aid kit, warning triangle and fire extinguisher safely in the holders provided in the vehicle.
- Stow the high-visibility waistcoat in a stowage compartment where it can be easily reached.

Information call, breakdown call and Emergency Call Service

Fig. 1 In the roof console: button for Emergency Call Service (behind button cover) and indicator lamp.

Fig. 2 In the roof console: button for Emergency Call Service.

Fig. 3 In the roof console: touch panels for Information Call and Breakdown Call.

Information Call.

Breakdown Call.

Depending on the vehicle equipment and country, voice services and the Emergency Call Service can be performed by means of the control in the roof console → *Fig. 1*, → *Fig. 2*, → *Fig. 3*. If the Emergency Call Service is available in the vehicle's service portfolio, the Emergency Call Service is activated as standard for a limited period of time. The required connection is established by a factory-fitted control unit.

Please also observe the additional information on mobile online services .

Indicator lamp for the Emergency Call Service

The control is equipped with an indicator lamp → *Fig. 1* (arrow). Depending on the operational status of the Emergency Call Service in the vehicle, the indicator lamp lights up in different colours and light sequences:

- Indicator lamp does not light up: Emergency Call Service is deactivated or not available.
- Indicator lamp flashes red after the ignition is switched on: system error. Emergency Call Service is deactivated.
- Indicator lamp lights up red continuously: system error. Emergency Call Service is restricted or not available.
- Indicator lamp lights up green: Emergency Call Service is available, system is ready for operation in the vehicle.
- Indicator lamp flashes green: active connection to a voice service.

Information Call

— The Information Call enables you to call Volkswagen Customer Care.

— The Information Call function is available only in some sales regions.

— The person who takes your call will talk to you in the language set up in the vehicle's Infotainment system.

— The Information Call can be made when the driver seat is occupied or the vehicle ignition is switched on.

— The Information Call can be made manually via the touch panel in the roof console or via the function button in the telephone menu on the Infotainment system.

Breakdown Call

— The Breakdown Call function allows you to seek professional assistance should your vehicle break down.

— Some vehicle data, e.g. the current location, is transmitted parallel to the voice call.

— The person who takes your call will talk to you in the language of the country in which the vehicle was registered for the mobile online services.

— If the vehicle has not yet been registered for the mobile online services, the person who takes your call will speak to you in the language of the country for which the vehicle was produced.

— The Breakdown Call can be made when the driver seat is occupied or the vehicle ignition is switched on.

— The Breakdown Call can be made manually via the touch panel in the roof console or via the function button in the telephone menu on the Infotainment system.

Emergency Call Service

— The Emergency Call Service enables help to be organised as quickly as possible in dangerous situations.

— When the Emergency Call Service is triggered, a connection to the Volkswagen emergency call centre is established.

— If an emergency call is placed manually, or automatically after an accident where an airbag or the belt tensioners were triggered, data relevant for the emergency call, e.g. the current vehicle location, will be transmitted automatically .

— The person who takes your call will talk to you in the language set up in the vehicle's Infotainment system. English is used if this language is not available at the location of the emergency.

— Additional factory-fitted components are installed in order to ensure that the function is still possible even after a serious accident, e.g. emergency call microphone, emergency loudspeaker and an integrated battery that is independent of the vehicle electrical system.

— The Emergency Call Service can be permanently deactivated by a suitably qualified workshop. Volkswagen recommends using an authorised Volkswagen repairer.

— If the legally required eCall Emergency System is present in the vehicle, the Emergency Call Service can be deactivated via the portal and the app or by preventing data transmission in the Infotainment system. If present in the vehicle, the legally required eCall Emergency System cannot be switched off and cannot be deactivated *(→ Manage services)*.

⚠ WARNING

The following conditions may limit or prevent the execution of a manual or automatic emergency call:

- Your current emergency call location is in an area with no or insufficient mobile communications and satellite signal reception.
- The mobile communications network of the required telecommunication providers is not available in areas with sufficient mobile communications and satellite reception. In this case, the emergency call reverts to the legally required eCall Emergency System, if present in the vehicle.
- The Emergency Call Service is prohibited by law in some countries.
- There is no valid licence for the use of the Emergency Call Service.
- The components in the vehicle required for the manual or automatic emergency call are damaged or do not have sufficient electrical power.
- The Emergency Call Service function was deactivated via the portal or app. In this case, the emergency call reverts to the legally required eCall Emergency System, if present in the vehicle.
- The Emergency Call Service function was deactivated by disabling data transmission. In this case, the emergency call reverts to the legally required eCall Emergency System, if present in the vehicle. It the legally required eCall Emergency System is not available for technical reasons, the Emergency Call Service will be activated again automatically.
- The vehicle ignition is not switched on.

Initiating an emergency call manually

1. If fitted, briefly press on the button cover → *Fig. 1* and fold the button cover down.
2. Press the button for the legally required eCall Emergency System → *Fig. 2* until the indicator lamp flashes green.

   The emergency call is now initiated and a voice connection is established to the Volkswagen emergency call centre.

If you have accidentally pressed the emergency call button, cancel the emergency call immediately.

1. Press the emergency call button again until the indicator lamp lights up green continuously.

ℹ Press the button for the legally required eCall Emergency System → *Fig. 2* only in an emergency.

Automatic emergency call

An automatic emergency call is initiated only when the ignition is switched on.

A connection to the Volkswagen emergency call centre is set up automatically in the following situations:

— Immediately after the airbags are triggered.

— Immediately after the belt tensioners are triggered.

— Depending on equipment, after a system intervention by Emergency Assist.

The automatic emergency call cannot be cancelled by pressing the button for the legally required eCall Emergency System → *Fig. 2*.

If queries from the Volkswagen emergency call centre remain unanswered, rescue measures are automatically initiated.

Integrated battery

The integrated battery ensures that the emergency call service remains available for some time if the 12-volt vehicle battery is disconnected or faulty.

A corresponding message will be displayed in the instrument cluster display if the integrated battery is discharged or faulty. If this message is displayed, immediately go to a suitably qualified workshop and have the integrated battery replaced. Volkswagen recommends using an authorised Volkswagen repairer.

Have the integrated battery checked by a suitably qualified workshop after about 3 years and replaced if necessary. Volkswagen recommends using an authorised Volkswagen repairer.

Data transmission

In the event of an emergency call, the available data is transmitted to the Volkswagen emergency call centre to determine the necessary rescue measures.

The data on the vehicle location is continuously overwritten so that only the last ten stored locations required for correct functioning of the Emergency Call Service are available. The vehicle is therefore not permanently tracked.

The data relating to the emergency call is processed in order to ensure correct functioning of the Emergency Call Service. The data related to the emergency call is automatically deleted from the vehicle system 13 hours after the emergency call was triggered.

The following data is transmitted:

— Current position of the vehicle when the emergency call was triggered.

— Nine other positions shortly before the emergency call was triggered (route driven, a few km (a few miles)).

— Vehicle identification number (VIN).

— Type of vehicle drive.

— Vehicle type.

— Type of trigger (automatic or manual)

— Type of call.

— Direction in which the vehicle was moving when the emergency call was triggered.

— Accident severity.

— Accident direction.

— Type of casualty.

— Time of collision.

— Temperature.

— Type of road.

— Reliability of positioning data.

— Version of data strings.

— Counter of data strings transferred per call.

— Determined number of passengers.

— Language selected in the Infotainment system.

— Optional data ID.

You can apply to view and delete the transmitted data by contacting the Volkswagen emergency call centre.

Depending on the vehicle equipment and country, data transmission can be influenced by the privacy settings *(→ Privacy settings)*. The functions of the voice services and Emergency Call Service can be guaranteed only if data transmission is fully possible.

The function of the Emergency Call Service may be restricted if Infotainment systems have been retrofitted.

Reverting to the legally required eCall Emergency System

In some situations, the Emergency Call Service may be restricted or unavailable. If the legally required eCall Emergency System is present in the vehicle, a voice connection will be established to a public emergency call centre if possible. In this case, the available data is transmitted to the public emergency call centre in order to determine the necessary rescue measures .

Troubleshooting

Emergency Call Service is faulty

The indicator lamp in the emergency call button lights up red continuously. In addition, the message **Error: Emergency call function. Please visit workshop.** may be displayed in the instrument cluster display.

There is a system fault in the Emergency Call Service. It may not be possible to make an emergency call.

1. Go to a suitably qualified workshop immediately and have the fault rectified. Volkswagen recommends using an authorised Volkswagen repairer.

Emergency Call Service is restricted

The indicator lamp in the emergency call button lights up red continuously. In addition, the message **Emergency call function restricted. Please visit workshop.** may be displayed in the instrument cluster display.

The availability of the Emergency Call Service function is restricted. It is not possible to establish a voice connection to the Volkswagen emergency call centre, for example.

1. Go to a suitably qualified workshop immediately and have the fault rectified. Volkswagen recommends using an authorised Volkswagen repairer.

Touch panels react differently than expected

Moisture, dirt and grease can impede the functioning of the touch panels.

1. Always keep touch panels clean and dry.

Legally required eCall Emergency System

Fig. 1 In the roof console: button for legally required eCall Emergency System (behind button cover) and indicator lamp.

Fig. 2 In the roof console: button for the legally required eCall Emergency System.

Depending on the equipment and country, the vehicle may be equipped with an emergency call system. In some countries, the free legally required eCall Emergency System is activated as standard. The control unit is in the roof console.

The emergency call function enables help to be organised as quickly as possible in dangerous situations. A voice connection is established with a public emergency call centre. The person who takes your call will talk to you in the language of the country in which the vehicle is located. In addition, legally required data relevant for the emergency call is transmitted automatically to the public emergency call centre, such as the current vehicle position.

The legal basis for data processing by the legally required eCall Emergency System corresponds to the country-specific legislation, e.g. EU Regulation 2015/758. Please also observe the information on data storage and services *(→ Data processing in the vehicle)*.

The required connection is established by a factory-fitted control unit. Additional components are required in order to ensure that the function is still possible even after a serious accident, e.g. emergency call microphone, emergency loudspeaker and an integrated battery that is independent of the vehicle electrical system.

Indicator lamp for the legally required eCall Emergency System

The control is equipped with an indicator lamp → *Fig. 1* (arrow). Depending on the operational status of the emergency call system in the vehicle, the indicator lamp lights up in different colours and light sequences:

- Indicator lamp does not light up: emergency call is not available.
- Indicator lamp flashes red after the ignition is switched on: emergency call is deactivated.
- Indicator lamp lights up red continuously: system error. Emergency call is restricted or not available.
- Indicator lamp lights up green: emergency call is available, system is ready for operation in the vehicle.
- Indicator lamp flashes green: emergency call is active.

⚠ WARNING

The following conditions may limit or prevent the execution of a manual or automatic emergency call:

- Your current emergency call location is in an area with no or insufficient mobile communications and satellite signal reception.
- No 2G/3G mobile communications network of telecommunication providers is available in areas with sufficient mobile communications and satellite signal reception.
- The emergency call system is not available in some countries.
- The public emergency call centre is technically not able to receive emergency call data.
- The components in the vehicle required for the manual or automatic emergency call are damaged or do not have sufficient electrical power.
- The vehicle ignition is not switched on.

Initiating an emergency call manually

1. Briefly press on the button cover and fold the button cover down → *Fig. 1*.
2. Press the button for the legally required eCall Emergency System → *Fig. 2* until the indicator lamp flashes green.

   The emergency call is now initiated and a voice connection is established to the public emergency call centre.

If you have accidentally pressed the emergency call button, cancel the emergency call immediately.

1. Press the emergency call button again until the indicator lamp lights up green continuously.

ℹ Press the button for the legally required eCall Emergency System → *Fig. 2* only in an emergency.

Automatic emergency call

An automatic emergency call is initiated only when the ignition is switched on.

A connection to the public emergency call centre is set up automatically in the following situations:

— Immediately after the airbags are triggered.

— Immediately after the belt tensioners are triggered.

— Depending on equipment, after a system intervention by Emergency Assist.

The automatic emergency call cannot be cancelled by pressing the button for the legally required eCall Emergency System → *Fig. 2*.

Rescue measures will be initiated automatically if there is no response to questions from the public emergency call centre.

Integrated battery

The integrated battery ensures that the legally required eCall Emergency System remains available for some time if the 12-volt vehicle battery is disconnected or faulty.

A corresponding message will be displayed in the instrument cluster display if the integrated battery is discharged or faulty. If this message is displayed, immediately go to a suitably qualified workshop and have the integrated battery replaced. Volkswagen recommends using an authorised Volkswagen repairer.

Have the integrated battery checked by a suitably qualified workshop after about 3 years and replaced if necessary. Volkswagen recommends using an authorised Volkswagen repairer.

Data transmission

In the event of an emergency call, the legally prescribed data is transmitted to the public emergency call centre in order to determine necessary rescue measures.

The data on the vehicle location is continuously overwritten so that only the last three stored locations required for correct functioning of the legally required eCall Emergency System are available. The vehicle is therefore not permanently tracked.

The data relating to the emergency call is processed exclusively in order to ensure correct functioning of the legally required eCall Emergency System. The data related to the emergency call is automatically deleted from the system 13 hours after the emergency call was triggered.

The following data is transmitted:

— Current position of the vehicle when the emergency call was triggered.

— Two other positions shortly before the emergency call was triggered (route driven, a few 100 m (a few 100 ft)).

— Vehicle identification number (VIN).

— Type of vehicle drive.

— Vehicle type.

— Type of trigger (automatic or manual)

— Type of call.

— Direction in which the vehicle was moving when the emergency call was triggered.

— Accident direction.

— Deceleration rate in the event of an accident in longitudinal direction.

— Deceleration rate in the event of an accident in lateral direction.

— Time of collision.

— Reliability of positioning data.

— Version of data strings.

— Counter of data strings transferred per call.

— Determined number of passengers.

You can apply to view and delete the transmitted data by contacting the public emergency call centre.

The function of the legally required eCall Emergency System may be restricted if Infotainment systems have been retrofitted.

Troubleshooting

Fault in legally required eCall Emergency System

The indicator lamp in the emergency call button lights up red continuously. In addition, the message **Error: Emergency call function. Please visit workshop.** may be displayed in the instrument cluster display.

There is a system fault in the legally required eCall Emergency System. It may not be possible to make an emergency call.

1. Go to a suitably qualified workshop immediately and have the fault rectified. Volkswagen recommends using an authorised Volkswagen repairer.

Legally required eCall Emergency System restricted

The indicator lamp in the emergency call button lights up red continuously. In addition, the message **Emergency call function restricted. Please visit workshop.** may be displayed in the instrument cluster display.

The function of the legally required eCall Emergency System is restricted. It is not possible to establish a voice connection to the public emergency call centre, for example.

1. Go to a suitably qualified workshop immediately and have the fault rectified. Volkswagen recommends using an authorised Volkswagen repairer.

Functions of the vehicle key

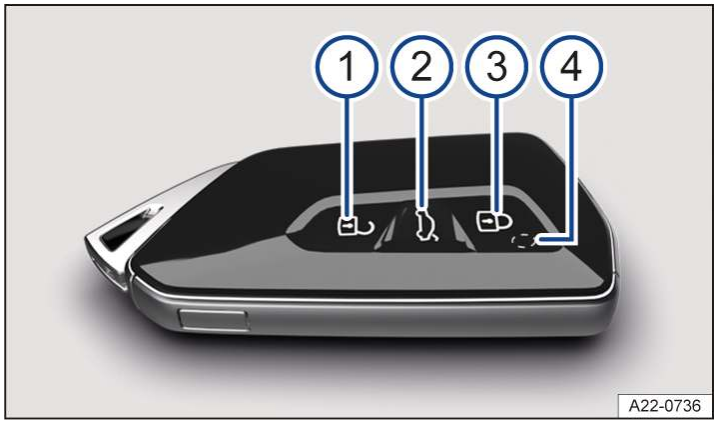

Fig. 1 Vehicle key.

1. Unlock the vehicle. Press once: the vehicle is unlocked according to the settings in the Infotainment system. Press twice: the complete vehicle is unlocked.
2. Unlock only the boot lid. All turn signals flash twice. To do this, press and hold the button briefly. The boot lid will open if the button is pressed and held.
3. Lock the vehicle. All turn signals flash once. Pressing once locks the vehicle and activates SAFELOCK. Pressing twice locks the vehicle without SAFELOCK.
4. Indicator lamp.

Depending on the vehicle equipment level, the vehicle may have a SAFELOCK mechanism. This prevents the doors from being opened both from inside and outside.

If a vehicle is equipped with SAFELOCK, this is activated automatically when the vehicle is locked with the vehicle key or the sensor in the door handle. If it is wished to cancel the SAFELOCK function, the vehicle key or door handle sensor must be operated again. The vehicle is then only locked. In this case, opening from outside is prevented and opening from inside is possible.

WARNING

If the vehicle key is left unattended in the vehicle, children or unauthorised persons could lock the doors and the boot lid, activate the vehicle's drive system or switch on the ignition and thus operate electrical equipment, such as the electric windows. This can result in accidents and serious or even fatal injuries.

- Take all vehicle keys with you every time you leave the vehicle.

WARNING

If children, people requiring assistance or animals are left unattended in the vehicle, they could accidentally set the vehicle in motion or be exposed to very high or low temperatures. There is a risk of accidents and serious or fatal injuries.

- Never leave children, people requiring assistance or animals unattended in the vehicle.

NOTICE

External influences can restrict the vehicle key functions and damage the key.

- Protect the key from moisture and excessive vibration.

The service life of the button cell in the vehicle key will be shortened by regular use of convenience systems and other use behaviour.

Manual key

Fig. 1 Vehicle key: releasing the manual key (illustration).

1. Press the release button briefly. The keyring folds open.
2. Press the release button and pull the manual key out in the direction of the arrow.
3. Manual key.

A manual key is located in the vehicle key which can be used to lock and unlock the vehicle manually → *Fig. 1*.

If the vehicle or vehicle key battery is flat, it may be necessary to lock or unlock the vehicle manually *(→ Doors)*.

Changing the button cell

Volkswagen recommends having the button cell replaced by a suitably qualified workshop. Volkswagen recommends using an authorised Volkswagen repairer → ⚠.

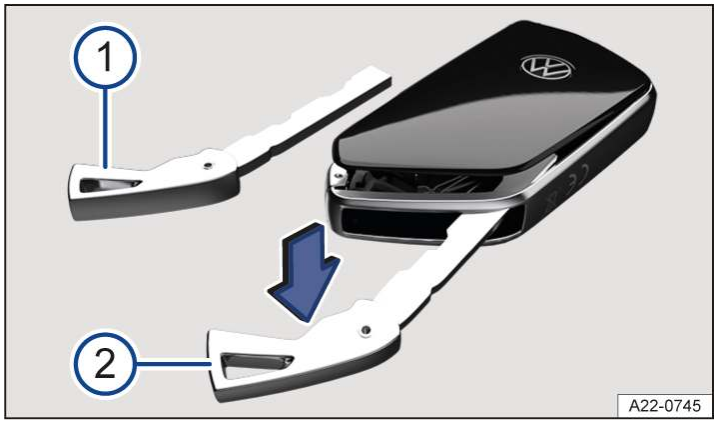

Fig. 1 Vehicle key: opening the battery compartment cover.

(1) Manual key.

(2) Lever out the cover.

Fig. 2 Vehicle key: replacing the button cell.

1. Remove the manual key → *Fig. 1* (1) *(→ Vehicle key)*.
2. Insert the manual key in the slot, press in the direction of the arrow and lever off the cover → *Fig. 1* (2).
3. Lever the button cell out of the battery compartment → *Fig. 2* , → ⚠.
4. Press the new button cell into the battery compartment.
5. Press the cover onto the housing → *Fig. 2* , → ⓘ.
6. Put the manual key back *(→ Vehicle key)*.
7. Dispose of the discharged button cell in an environment-friendly manner.

⚠ DANGER

If button cell batteries are swallowed or get into the wind pipe, this will lead to serious or even fatal injuries due to suffocation or internal burns within a very short space of time.

- Call for medical help immediately if you suspect that someone has swallowed a button cell battery.
- Always keep the vehicle key and key fob with button cells out of the reach of children.

NOTICE

The vehicle key can be damaged if the button cell is not changed properly or if an unsuitable button cell is used.

- Replace a discharged button cell only with a new button cell of the same voltage rating, size and specification.
- Pay attention to the correct polarity when inserting the button cell.
- If the battery compartment cover cannot be closed, do not use the remote control.

Button cells of the type used in the remote control of your vehicle key may contain perchlorate. This may require special handling. Please observe all the legal requirements regarding the handling and disposal of these button cells *(→ Product recycling)*. Volkswagen recommends having this service carried out by a suitably qualified workshop. Volkswagen recommends using an authorised Volkswagen repairer.

Synchronising the vehicle key

If you cannot lock or unlock the vehicle with the vehicle key, synchronise the vehicle key or replace the button cell *(→ Vehicle key)*.

Synchronising the vehicle key

1. Stand beside the vehicle.
2. Press the button on the vehicle key twice in quick succession.

Or:

1. Remove the manual key *(→ Vehicle key)*.
2. If necessary, remove the cover of the driver door handle *(→ Doors)*.
3. Press the button on the vehicle key.
4. Unlock the vehicle using the manual key.
5. Open the driver door.

   If the vehicle has an anti-theft alarm, this will be triggered immediately *(→ Anti-theft alarm)*.
6. Switch on the ignition.

   An emergency start must be performed in order to switch on the ignition. *(→ Starting the engine)*.

   The synchronisation process is complete.

Troubleshooting

Vehicle cannot be locked or unlocked

The vehicle key is subject to interference caused by obstacles, adverse weather conditions or other transmitters operating in the same frequency range in the vicinity of the vehicle, e.g. mobile telephones, or due to a weak or flat button cell.

1. Close the driver door.

   Or: synchronise the vehicle key *(→ Vehicle key)*.

   Or: change the button cell in the vehicle key *(→ Vehicle key)*.

The central locking system switches off temporarily to protect itself from overloading.

1. Wait for about 10 seconds.
2. Try to activate the central locking system again.

Indicator lamp does not flash

If the indicator lamp in the vehicle key does not flash when a button is pressed, the button cell in the vehicle key must be replaced.

Vehicle does not flash when locked

— All doors, the bonnet and the boot lid must be fully closed. The turn signals flash only if the vehicle is fully closed.

— Check whether the vehicle key is close enough to the vehicle.

— Check the charge level of the key battery.

The indicator lamp in the vehicle key must light up each time the buttons are pressed.

The central locking button lights up white.

— The vehicle is unlocked.

— Close all doors and operate the central locking button in the door.

— The central locking button lights up yellow when all doors have been locked from inside.

— If the central locking button still lights up white, the doors are not locked and there is a fault. Go to a qualified workshop. Volkswagen recommends using an authorised Volkswagen repairer.

Vehicle cannot be unlocked due to a flat key battery

1. Remove the manual key from the vehicle key *(→ Vehicle key)*.
2. Insert the manual key in the door lock cylinder and turn anticlockwise.

   On right-hand-drive vehicles, turn the manual key clockwise.

   The driver door is unlocked mechanically.
3. Open the driver door.
4. Switch on the ignition.

   The alarm is ended.
5. To unlock the other doors, operate the central locking button in the door.

Depending on equipment, an alarm is triggered when the door is opened.

Vehicle cannot be unlocked due to a flat vehicle battery

1. Remove the manual key from the vehicle key *(→ Vehicle key)*.
2. Insert the manual key in the door lock cylinder and turn anticlockwise.

   On right-hand-drive vehicles, turn the manual key clockwise.
3. The driver door is unlocked mechanically.
4. Open the driver door.

If the SAFELOCK function was not activated previously, all doors can now be opened and unlocked individually by pulling the respective interior door handle.

It is not possible to open the other doors if the SAFELOCK is activated.

The central locking functions will be available again after the convenience battery has been charged.

Additional or replacement vehicle keys can be obtained from an authorised Volkswagen repairer.

Introduction to the topic

Depending on equipment, the vehicle may be equipped with the Keyless Access function.

Keyless Access enables the vehicle to be locked and unlocked without active use of the key. For this purpose, a valid vehicle key must be within the detection range of the vehicle.

Unlocking or locking the vehicle with Keyless Access

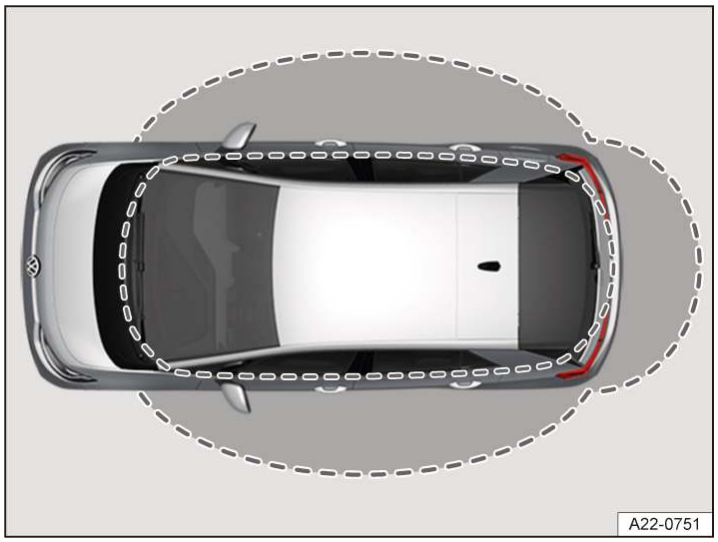

Fig. 1 Keyless Access: detection range (illustration).

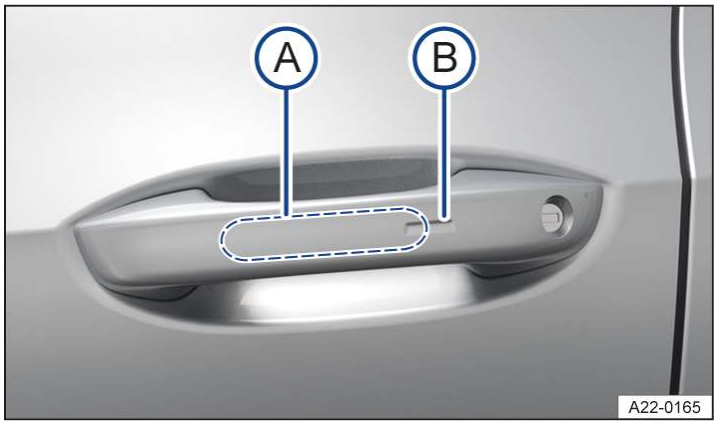

Fig. 2 In the door handle: sensors.

(A) Sensor surface on the inside of the door handle.

(B) Sensor surface on the outside of the door handle.

Configuring Keyless Access

The behaviour of Keyless Access can be set in the **Vehicle** menu in the Infotainment system.

If the Keyless Access function is deactivated, functions may be restricted as a result.

Unlock the vehicle

1. Touch the sensor on the inside of the door handle → *Fig. 2* (*A*).

   All turn signals flash twice.

The driver door is unlocked. All doors can be opened simultaneously by means of the central locking button in the driver door.

Unlocking the vehicle when approaching

Depending on equipment, the vehicle can be unlocked automatically when you approach it. The following conditions need to be met simultaneously:

✓ The function is activated in the Infotainment system.

✓ The vehicle key is in the vehicle's unlocking range.

All turn signals flash twice when automatic unlocking has been performed successfully.

If the vehicle has not been unlocked for an extended period, the function will be available again only after the next activation of the vehicle's drive system.

If single door unlocking is activated, the driver door will be unlocked only if the vehicle is approached on the driver side. Other doors are not unlocked.

Lock the vehicle

1. Park and exit the vehicle.
2. Touch the sensor on the outside of the door handle → *Fig. 2* (*B*).

   All turn signals flash once.

The unlocking function is deactivated for a few seconds so that you can check that the vehicle has been locked successfully.

Locking the vehicle when walking away

Depending on equipment, the vehicle can be locked automatically when you walk away from it. The following conditions need to be met simultaneously:

✓ The function is activated in the Infotainment system.

✓ The last key belonging to the vehicle leaves the locking range.

✓ All turn signals flash once when automatic locking has been performed successfully.

Automatic locking will not take place if there is another vehicle key in the vehicle.

One-off deactivation of automatic locking:

1. Press the button for longer than 2 seconds while the door is open.

   Automatic locking will then not be available until the next time the vehicle is locked intentionally.

The vehicle will be locked only if all doors and the boot lid are closed. Depending on the vehicle settings, a double acoustic warning may be output to indicate that there are open doors or windows.

Locking takes place without SAFELOCK in the case of locking when walking away from the vehicle. This is signalled by a single acoustic feedback. SAFELOCK locking of the vehicle takes place only after intentional locking at the door handle or with the vehicle key.

If the vehicle key is located in the detection range around the vehicle for an extended period, this can lead to restrictions in the locking function when moving away or the unlocking function when approaching.

Certain devices can prevent locking. The vehicle will then remain unlocked without an acoustic warning. Always make sure that the vehicle is locked.

If the vehicle was parked and not used for an extended period, the vehicle can be unlocked only by means of the sensor on the inside of the driver door handle or using the vehicle key.

Unlocking the boot lid

When the vehicle is locked, the boot lid will be unlocked automatically if it is opened when a vehicle key is located within the detection range of the boot lid. The boot lid will be locked again after closing.

Please note: when **Central locking, all doors** and **Keyless Access unlocking when approaching** are activated in the Infotainment system, the vehicle remains unlocked after the boot lid has been opened and closed. The vehicle must be actively locked.

Temporarily deactivating the keyless locking and starting system Keyless Access

The Keyless Access unlocking function can be deactivated temporarily.

1. Lock the vehicle with the button on the vehicle key.
2. Touch the sensor on the outside of the door handle → *Fig. 2* (B) once within 5 seconds. Do not put your hand around the door handle when doing this.

   Keyless Access is now temporarily deactivated.
3. To check deactivation, wait for at least 10 seconds and then pull the door handle again.

   It should not be possible to open the door.

When the vehicle is next unlocked, it can be unlocked electronically with the vehicle key only. The keyless locking and starting system Keyless Access is reactivated the next time the vehicle is unlocked.

Permanently deactivating Keyless Access

Keyless Access can be permanently deactivated in the Infotainment system.

Troubleshooting

Keyless Access does not work

The function of the door handle sensors may be restricted if they become very dirty.

1. Clean the sensors.

All turn signals flash four times

The vehicle key used last is still in the vehicle.

1. Remove the vehicle key and lock the vehicle.

Automatic deactivation of the sensors

The sensors will be deactivated in the following circumstances:

— The vehicle is not unlocked or locked for an extended period.

— A sensor has been triggered an excessive number of times.

Activating sensors again:

1. Unlock the vehicle with the button on the vehicle key.

Vehicle cannot be unlocked or locked from inside due to discharged key battery

If the button cell in the vehicle key is weak or discharged, it is possible that the vehicle key will not be recognised.

1. Hold the vehicle key against the lower section of the centre console *(→ Starting the engine)*.

   The vehicle key is recognised.

   The doors can be unlocked or locked again.

No valid vehicle key recognised

The indicator lamp lights up yellow. A text message is additionally shown on the instrument cluster display.

The vehicle key is no longer in the vehicle.

1. Do not deactivate the vehicle's drive system.
2. Bring the vehicle key back into the vehicle.

   Or: depending on the equipment, remove the vehicle key from the immediate vicinity of the wireless charging function. Then place the vehicle key in the drink holder in the centre console.

If the problem persists, go to a suitably qualified workshop. Volkswagen recommends using an authorised Volkswagen repairer.

Automatic unlocking or locking does not work

The vehicle does not unlock when approached.

— The function must be set in the Infotainment system.

The vehicle does not lock upon moving away.

— The function is not selected in the Infotainment system.

— There is still a vehicle key in the vehicle.

— The doors or boot lid are not fully closed

If at least one window is open and the sensors in a door handle are continuously activated, all windows will close.

If the message **Keyless Access system faulty** appears on the instrument cluster, malfunctions can occur in the Keyless Access system. Go to a suitably qualified workshop. Volkswagen recommends using an authorised Volkswagen repairer.

The Keyless Access function may not work properly if the vehicle key is subject to interference from another radio signal, e.g. a mobile telephone in the direct vicinity, or is covered by another object such as a metal case. If there is no vehicle key in the vehicle or if it is not detected, a corresponding message will be shown in the instrument cluster.

Introduction to the topic

The doors can be locked manually and, in some cases, also unlocked manually, if the vehicle key or central locking fails, for example.

The central locking system enables you to centrally lock and unlock all the doors, the boot lid and the charging socket flap of the vehicle.

The vehicle can be locked if the ignition has been switched off or the driver has deactivated the vehicle's drive system before leaving the vehicle.

Display with open doors

A symbol in the instrument cluster indicates if one or more doors are not closed properly.

STOP Do not drive on!

1. Park the vehicle safely if necessary.
2. Open the door in question and then close it again.

This symbol is also visible when the ignition is switched off and will go out a few seconds after the vehicle has been locked when all doors are closed.

WARNING

Any door that is not properly closed could open suddenly while the vehicle is in motion. This could lead to severe or fatal injuries.

- Stop immediately as soon as traffic permits and close the door.
- Make sure that the door is closed properly and that the lock has engaged. The closed door must be flush with the surrounding body panels.

WARNING

Any door being held open by the door arrester could close unexpectedly in strong winds or if the vehicle is on an uphill slope. This could lead to serious injuries.

- Always hold the door handle firmly when opening and closing doors.

WARNING

Opening and closing the doors and boot lid without taking due care is dangerous and can cause serious injuries.

- Open or close the doors and boot lid only when there is no-one in their movement path.

WARNING

The central locking system locks all doors. In the event of an emergency or an accident, locked doors can make it more difficult for persons providing assistance to gain access to the vehicle interior. If the vehicle is locked from the outside, the doors and electric windows cannot be opened from the inside. There is a risk of serious or fatal injuries.

- Never leave children, people requiring assistance or animals unattended in the vehicle.

WARNING

All doors can be locked from the inside using the central locking button. This may mean that children, people requiring assistance or animals lock themselves in the vehicle. In an emergency, they may not be able to leave the vehicle independently or to help themselves. In addition, they could also be exposed to very high or low temperatures. There is a risk of serious or fatal injuries.

- Never leave children, people requiring assistance or animals unattended in the vehicle.

NOTICE

Removing the caps without taking due care can damage the vehicle.

- When carrying out manual opening or closing, remove parts carefully and fit them again correctly.

Locking the vehicle from the inside can prevent accidental opening of the doors and unauthorised persons from entering the vehicle.

People who are locked in the vehicle can unlock the doors in an emergency by pulling the door release lever forcefully twice. The lever must be pulled beyond a noticeable resistance in this case.

Opening doors

Opening doors from outside

1. Unlock the vehicle with the vehicle key.
2. Grip the door handle and press and hold the button on the inner side of the door handle.
3. Pull open the door.

Opening doors from inside

1. Pull the door release lever up to the point of resistance and push open the door. Do not pull the door release lever beyond the point of resistance.

If the vehicle was locked from outside, the door release lever must be pulled twice up to its limit position in order to open the door from inside.

Convenience features

If you sit on the driver seat when the ignition is switched off, the following convenience features will be activated:

— The air conditioning system is available.

— Some of the convenience consumers, e.g. the Infotainment system, are available.

— The roll-away protection remains activated.

— The ignition is still switched off.

The ignition is switched on only by pressing the starter button or by depressing the brake when there is a detected key *(→ Starter button)*.

If the ignition has been switched off again and you are still sitting in the driver seat, the vehicle remains in Comfort mode until you get out. Additional deactivations are possible due to a low 12 V battery charge level, after a period of 30 minutes has elapsed, or if the vehicle is locked.

Indicator lamp in the driver door

The central locking system indicator lamp is located in the driver door.

The indicator lamp indicates the status of the central locking system for around 30 seconds after the vehicle has been locked.

A red LED flashes for approximately 2 seconds at short intervals.

The status of the central locking system is then indicated for 28 seconds:

Vehicle with SAFELOCK

— The vehicle is locked with SAFELOCK if the red LED flashes at long intervals.

— If the red LED is not lit up, the vehicle is locked but without SAFELOCK.

Vehicle without SAFELOCK

— The vehicle is locked if the red LED flashes at long intervals.

The LED flashes at slow intervals after around 30 seconds.

Points to note

If the red LED is lit up continuously, there is a fault in the central locking system or the anti-theft alarm system.

Automatic locking and unlocking

Depending on the vehicle equipment, the settings for central locking can be made in the **Vehicle settings** menu in the Infotainment system.

Automatic locking (Auto Lock)

The vehicle locks itself automatically at speeds above approximately 15 km/h (around 9 mph). The indicator lamp in the central locking button will light up yellow when the vehicle is locked.

Automatic unlocking (Auto Unlock)

All vehicle doors and the boot lid are automatically unlocked if one of the following conditions applies:

— In an accident when airbags have triggered *(→ Doors)*.

— **Or:** the electronic parking brake is engaged and the ignition is switched off.

— **Or:** the door release lever has been operated. This applies at speeds up to around 15 km/h (around 9 mph).

Automatic unlocking gives emergency responders access to the vehicle.

Central locking touch panel

Fig. 1 In the driver door: central locking touch panel.

(1) Indicator lamp in the touch panel for central locking.

- open the boot lid.

If the button in the driver door is pulled, only the boot lid opens. All doors remain locked.

Depending on the country, the touch panel for central locking can also be found in the front passenger door.

If the vehicle has been locked from outside with the vehicle key, the central locking touch panel is not activated.

Please note the following: if the vehicle was locked from inside using the central locking touch panel:

— The indicator lamp in the touch panel lights up yellow when all doors are closed and locked → *Fig. 1* (1).

— The anti-theft alarm will not be activated *(→ Anti-theft alarm)*.

The doors can be opened from the inside by pulling the door release handle. The indicator lamp in the touch panel goes out. The unopened doors and boot lid remain locked and cannot be opened from the outside.

If the driver door is open, it will not be locked.

Manually close the front passenger door and rear doors

Fig. 1 In the front edge of the rear door: locking the vehicle manually with the manual key (variant 1).

Fig. 2 In the front edge of the rear door: locking the vehicle manually with the manual key (variant 2).

The front passenger door and the rear doors can be locked manually.

The anti-theft alarm is not activated.

1. Open the door.
2. Insert the key bit or manual key into the slot and turn or press → *Fig. 1*.
3. Check that the door is locked. To do this, pull the door handle forcefully.
4. Have the vehicle checked immediately by a suitably qualified workshop. Volkswagen recommends using an authorised Volkswagen repairer.

The manually locked door is unlocked again when the vehicle is unlocked or the door is opened from the inside.

The doors can be unlocked and opened from the inside by pulling the door release handle.

Childproof lock

The childproof lock is located in the inner door panel of the rear doors.

The childproof lock prevents the rear doors being opened from the inside →⚠.

When the childproof lock is activated, the door can only be opened from the outside.

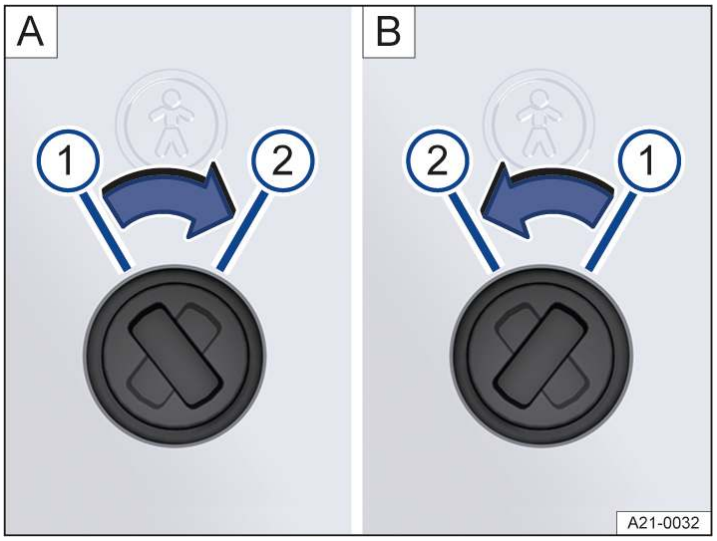

Fig. 1 Childproof lock: A rear left door, B rear right door.

1 Childproof lock is switched off.

2 Childproof lock is switched on.

Switching the childproof lock on and off

1. Unlock the vehicle and open the appropriate rear door.
2. Move the slot to the corresponding position → *Fig. 1*.

⚠ WARNING

The door cannot be opened from the inside when the childproof lock is activated. This may mean that people lock themselves in the vehicle. In an emergency, they may not be able to leave the vehicle independently or to help themselves.

- Never leave children or people requiring assistance alone in the vehicle when the doors are locked.

⚠ WARNING

If children, people requiring assistance or animals are left unattended in the vehicle, they could be exposed to very high or low temperatures. There is a risk of serious or fatal injuries.

- Never leave children, people requiring assistance or animals unattended in the vehicle.

SAFELOCK

Depending on the vehicle equipment level, the vehicle may have a SAFELOCK mechanism.

The SAFELOCK deactivates the door release levers if the vehicle has been locked. This makes it more difficult to break into the vehicle. The doors can no longer be opened from the inside →⚠.

Deactivating SAFELOCK

The SAFELOCK can be deactivated in one of the following ways:

— Press the button on the vehicle key again within 2 seconds.

— Touch the sensor on the outside of the door handle again within 2 seconds *(→ Keyless Access)*.

— Switch on the ignition.

Or: deactivate the interior monitoring system and the anti-tow alarm *(→ Interior monitoring system and anti-tow alarm)*.

Depending on the equipment level, temporarily deactivate the interior monitoring and the anti-tow alarm in the **Vehicle Settings** menu in the Infotainment system before locking the vehicle *(→ Interior monitoring system and anti-tow alarm)*.

A message may be displayed in the instrument cluster indicating that SAFELOCK is active.

The following applies when SAFELOCK is deactivated:

— The vehicle can be unlocked and opened from the inside using the door release lever.

— The anti-theft alarm is active *(→ Anti-theft alarm)*.

— The interior monitoring and anti-tow alarm are deactivated *(→ Interior monitoring system and anti-tow alarm)*.

⚠ WARNING

The doors can no longer be opened from the inside once the SAFELOCK is activated. Careless or unsupervised use of SAFELOCK can lock people in the vehicle interior and cause serious injuries in the event of an emergency.

- Never leave anybody in the vehicle if the vehicle has been locked using the vehicle key.

If you unlock the driver door mechanically using the vehicle key, only the driver door is unlocked, and not the whole vehicle. The doors are released (but not unlocked) and the central locking button is activated only when you switch on the ignition.

Troubleshooting

Indicator lamp lights up continuously

The red LED in the vehicle door flashes at short intervals and then lights up continuously.

There is a fault in the locking system.

1. Go to a suitably qualified workshop. Volkswagen recommends using an authorised Volkswagen repairer.

Turn signals do not flash

The turn signals do not flash as confirmation when the vehicle is locked:

1. Check to make sure that all the doors, the boot lid and the bonnet are closed.
2. Close the doors, boot lid or bonnet if they are open.

Vehicle locks itself automatically

The vehicle will lock itself again automatically after around 45 seconds if the vehicle was unlocked by remote control or Keyless Access and one of the following conditions applies:

— The boot lid was not opened.

— No door was opened.

— The ignition was not switched on.

Response when locking the vehicle with a second vehicle key

The vehicle key inside the vehicle is disabled for activating the vehicle's drive system as soon as the vehicle is locked from outside with a second vehicle key.

1. To enable the vehicle key inside the vehicle for normal activation of the vehicle's drive system, press the button on the vehicle key inside the vehicle *(→ Activating the vehicle's drive system)*.

Unlocking and locking the vehicle after airbags have been triggered

The entire vehicle is unlocked if the airbags are activated during an accident. The doors can be opened by forcefully pulling the door handles.

Depending on the extent of the damage, the vehicle can be locked as follows after an accident.

1. Switch the ignition off and then back on again.
2. Open all doors and close again.
3. Lock the vehicle.

The vehicle key has been locked in the vehicle

The vehicle can be locked when the boot lid or doors are open. If the key is then placed in the vehicle and the boot lid or doors are closed, the key can be locked in. On vehicles with Keyless Access, the vehicle flashes four times.

1. For vehicles with Keyless Access: Open the vehicle within a short time.
2. Unlock the vehicle with the second key.

It may not be possible to lock or unlock the vehicle using Keyless Access if the 12-volt vehicle battery or button cell in the vehicle key is weak or discharged. The vehicle can be unlocked or locked manually.

If there is no valid vehicle key in the vehicle or if it is not detected, a corresponding message will be shown in the instrument cluster. This may occur if the vehicle key is disrupted by another radio signal or is covered by another item such as an aluminium suitcase.

Anti-theft alarm

Depending on the vehicle equipment level, the vehicle may have an anti-theft alarm.

The anti-theft alarm monitors the doors, bonnet and the boot lid.

The anti-theft alarm is automatically activated when the vehicle is locked.

If the vehicle is not opened electronically with a valid vehicle key, the anti-theft alarm is triggered and emits acoustic and visual warning signals for up to 5 minutes.

When does the system trigger an alarm?

— When a door that was unlocked mechanically with the vehicle key is opened.

— When the bonnet is opened.

— When the boot lid is opened.

— When an invalid vehicle key is used.

— If there is movement inside the vehicle (in vehicles with interior monitoring) *(→ Interior monitoring system and anti-tow alarm)*.

— If the vehicle is lifted or towed (vehicles with anti-tow alarm) *(→ Interior monitoring system and anti-tow alarm)*.

— If the vehicle is transported on a car ferry or by rail (vehicles with anti-tow alarm or interior monitoring) *(→ Interior monitoring system and anti-tow alarm)*.

— If the 12-volt vehicle battery is disconnected.

— If the rear window is broken.

— If a device is connected to the diagnostic connection when the anti-theft alarm system is active.

Switching off the alarm

1. Unlock the vehicle using the unlocking button on the vehicle key.
2. *On vehicles with Keyless Access locking and starting system:* when the vehicle key is within range for unlocking, grip the door handle .
3. Switch on the ignition.

   To switch on the ignition, place the vehicle key in the area provided for it when performing an emergency start *(→ Starting the engine)*.

The anti-theft alarm will not function correctly if the 12-volt vehicle battery is weak or discharged.

Interior monitoring system and anti-tow alarm

Fig. 1 In the roof console: sensors for the interior monitoring system (arrows).

The interior monitoring system triggers an alarm if movement is detected in the interior of a locked vehicle *→ Fig. 1*.

The anti-tow alarm will be triggered if the vehicle is lifted.

Switching on the interior monitoring system and anti-tow alarm

1. Lock the vehicle.

   When the anti-theft alarm is switched on, interior monitoring and the anti-tow alarm are also active.

Depending on the equipment, the function of interior monitoring may be impaired if a load guard is used.

Temporarily switching off the interior monitoring system and anti-tow alarm

The interior monitoring system and anti-tow alarm can be switched off temporarily in the **Opening and closing** submenu in the Infotainment system *(→ Vehicle settings menu)*. Alternatively, interior monitoring and the anti-tow alarm can also be temporarily deactivated using the vehicle key. To do this, press the locking button on the vehicle key twice within 2 seconds. The interior monitoring system and anti-tow alarm remain deactivated until the next time the vehicle is locked.

The interior monitoring system and anti-tow alarm can be switched off in the exit menu. The ignition must be switched off when doing this *(→ Starter button)*.

To avoid false alarms, deactivate interior monitoring and the anti-tow alarm in the following situations:

— If any people or animals are to remain in the vehicle interior for a short period.

— If the vehicle is to be loaded onto another vehicle, transported or towed away.

— If the vehicle is to be parked in a car wash or a two-storey garage.

Risk of false alarms for the interior monitoring system

Interior monitoring can only work properly if the vehicle is completely closed. Observe the legal requirements. A false alarm can be triggered in the following situations:

— If one or more windows are fully or partially open.

— If lightweight items such as loose pieces of paper or items hung from the interior mirror are left in the vehicle.

— If the vibration alarm of a mobile telephone is switched on.

Permanent deactivation of interior monitoring and the anti-tow alarm is not possible.

If doors or the boot lid are still open when the anti-theft alarm is activated, only the anti-theft alarm is activated. Interior monitoring and the anti-tow alarm are not activated until all doors and the boot lid are closed.

SAFELOCK is also deactivated when the interior monitoring system and anti-tow alarm are switched off *(→ SAFELOCK)*.

Introduction to the topic

On vehicles with Keyless Access, the boot lid is automatically unlocked upon opening .

If single door or vehicle side unlocking is activated in the opening and closing settings in the Infotainment system, press the button on the vehicle key twice to unlock the boot lid.

On vehicles with Keyless Access, operate the sensor on the inside of the driver or front passenger door handle twice, depending on setting.

WARNING

Incorrect and unsupervised unlocking, opening or closing of the boot lid can cause accidents and serious injuries.

- Open or close the boot lid only when there is no-one in the movement path of the boot lid.
- Always keep the boot lid closed while the vehicle is in motion.
- Close and lock the boot lid and all doors when the vehicle is not in use.
- Check that the closed boot lid is flush with the surrounding body parts.

WARNING

Temperatures inside a locked vehicle may be extremely hot or cold depending on the season. This can cause serious injuries and illness or fatalities, especially among small children.

- Ensure that no one remains in the vehicle.
- Never leave children playing unattended in or around the vehicle, especially when the boot lid is open. Children could climb into the luggage compartment and shut the boot lid, thereby trapping themselves inside.

WARNING

It may not always be apparent that the boot lid is unlocked when a loaded luggage carrier is attached to it. If unlocked, the boot lid may open suddenly while the vehicle is in motion. This can cause serious injuries.

- Check that the closed boot lid is flush with the surrounding body parts.

WARNING

If there is a large amount of snow or a heavy load on the boot lid, the boot lid may lower by itself and cause serious injuries due to the additional weight.

- Never open the boot lid if it is covered by a large amount of snow or a load is attached to it, e.g. a luggage carrier.
- Remove the snow or load before opening the boot lid.
- Support the boot lid if necessary or remove the load or snow before opening the boot lid.

WARNING

If the boot lid is not closed correctly, this can cause the rear window to shatter and lead to serious injuries.

- Never close the boot lid by pressing with your hand on the rear window.

NOTICE

Incorrect use of the opening mechanism can damage the component and make it impossible to close the boot lid.

- Never use the opening mechanism to hold or fix a load.

NOTICE

Incorrect use of the rear window wiper can damage the component and lead to the component being torn off.

- Never use the rear window wiper to hold or fix a load.

NOTICE

Incorrect use of the boot lid or rear spoiler can damage the component and lead to the component being torn off.

- Never use the boot lid or roof spoiler to hold or fix a load.

Opening and closing the boot lid

Fig. 1 Open boot lid: handle recesses for closing the boot lid.

Opening the boot lid

1. To unlock the boot lid, press the or button on the vehicle key.
2. Press on the top of the Volkswagen badge and lift up the boot lid.

Closing the boot lid

1. Pull the boot lid down carefully by the handle recess in the interior trim → *Fig. 1* so that it engages in the lock → ⚠.

The boot lid will also be locked when the doors are locked.

A corresponding display in the ID. Cockpit indicates if the boot lid is open or not closed properly.

The boot lid is locked automatically when the vehicle is moving.

⚠ WARNING

Serious injuries can occur if the boot lid is closed incorrectly or without due care and attention.

- When opening the boot lid, make sure the boot lid is moved fully up.
- When closing the boot lid, make sure that no-one has their hands in the direct path of the boot lid as it moves.

If the boot lid is not opened within a few minutes after unlocking, it automatically locks again.

Troubleshooting

Boot lid cannot be opened or closed

— Check whether the boot lid is blocked by an obstacle.

  The boot lid can be moved by hand. You will need to use more force than usual.

— The drive switches off automatically in order to prevent overheating if the boot lid is operated too frequently within a short space of time. The boot lid can be opened and closed by hand with increased force until the drive has cooled down.

— The boot lid must be closed by hand if the 12-volt vehicle battery or fuse is disconnected or faulty.

All turn signals flash four times

The vehicle key used last is still in the vehicle.

1. Remove the key and lock the vehicle.

Boot lid is stiff

At outside temperatures around freezing point, the opening mechanism cannot always lift the partially opened boot lid automatically.

1. Guide the boot lid further upwards by hand.

Opening and closing windows

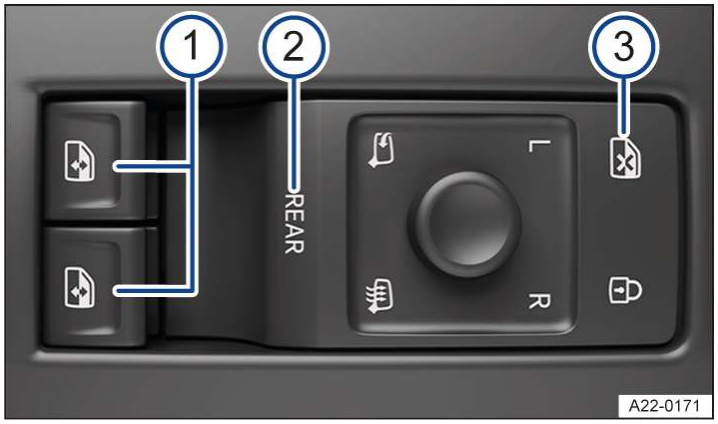

Fig. 1 In the driver door: buttons for the front and rear electric windows

(1) Buttons for electric windows.

(2) Touch control REAR for activating the rear electric windows and convenience opening and closing.

(3) Touch control for deactivating the electric window buttons in the rear doors and switching on the electric childproof lock.

The electric windows in the front doors can be operated with the → *Fig. 1* (1) buttons.

Opening windows

1. Press the button.

Closing windows

1. Pull the button.

Deactivate the window regulator switches in the rear doors

1. Operate the touch panel → *Fig. 1* (3).

The electric childproof lock is switched on at the same time. The indicator lamp in the touch control lights up yellow when the electric window buttons in the rear doors are deactivated and the childproof lock is switched on.

The windows can still be operated using the buttons several minutes after the ignition has been switched off, provided that the driver door and front passenger door are not opened.

Using the REAR touch control

1. To activate operation of the electric windows in the rear doors, briefly press the touch control REAR → *Fig. 1* (2).

   The touch control function light lights up when operation of the electric windows in the rear doors is activated.

2. To activate operation of the electric windows in the front doors, briefly press the touch control REAR → *Fig. 1* (2) again.

If the electric windows in the rear windows are not operated after operation has been activated, operation of the electric windows in the front doors will be activated again after around 10 seconds.

One-touch opening and closing

One-touch opening and closing makes it possible to fully open and close the windows. The individual buttons do not have to be held down to do this.

One-touch closing

1. Briefly pull the button for the corresponding window up to the second position.

One-touch opening

1. Briefly press the button for the corresponding window down to the second position.

Stopping the one-touch function

1. Press or pull the button for the appropriate window again.

Convenience opening and closing

Press and hold the REAR touch control to activate convenience opening and closing of the electric windows in all doors. The touch control function light flashes when the function is activated. All four windows can be simultaneously opened or closed with each of the two buttons .

If the electric windows are not operated after convenience opening and closing has been activated, operation of the electric windows in the front doors will be activated again after around 10 seconds.

Press and hold the REAR touch control briefly again to deactivate the function.

The windows can be opened and closed from outside the vehicle using the vehicle key when the ignition is switched off:

1. Press and hold the locking or unlocking button on the vehicle key.

   Or: *in vehicles with the keyless locking and starting system Keyless Access:* place your finger on the locking sensor in the door handle for a few seconds until the windows are closed . The vehicle key must be within the unlocking range for this.

2. To interrupt this function, let go of the locking or unlocking button.

   Or: remove your finger from the sensor.

A valid vehicle key must be located in the unlocking range for this. All turn signals will flash once as confirmation that all the windows have been closed.

Settings for convenience opening can be adjusted in the **Vehicle** menu in the Infotainment system.

WARNING

Careless or unsupervised use of the electric windows can cause serious injuries.

- Open or close electric windows only when there is no-one in the operating path of the windows.
- Always take all vehicle keys with you every time you leave the vehicle.
- Please note that the windows can still be opened or closed using the buttons in the doors for a short time after the ignition has been switched off, provided that the driver door or front passenger door is not opened.
- When transporting children on the rear bench seat, the rear electric windows should always be deactivated so that they cannot be opened or closed.

WARNING

When the vehicle is locked, the windows can no longer be opened and this makes it impossible to exit the vehicle interior. In an emergency situation, this can result in serious or fatal injuries.

- Never leave children or people requiring assistance alone in the vehicle when the vehicle is locked.

NOTICE

If it starts to rain or snow when the windows are open, this can soak the interior equipment of the vehicle and restrict the functions of the controls or damage them.

- Close all windows if it starts to rain or snow.

One-touch opening and closing and the roll-back function will not work if there is a fault in the electric windows. Go to a suitably qualified workshop. Volkswagen recommends using an authorised Volkswagen repairer.

Convenience opening and closing works only when one-touch opening and closing is activated for all electric windows.

Electric window roll-back function

The roll-back function for the electric windows can reduce the risk of injuries when the windows are closing.

If the window is not able to close because it is stiff or because of an obstruction, the window will immediately open again →⚠.

1. Check to see why the window has not closed.
2. Try to close the window again.

If the window closing process is interrupted again, the roll-back function will be disabled for a few seconds.

If the window still cannot be closed, the window stops where it is. The window will close without roll-back function if the window regulator switch is pulled again within a few seconds →⚠.

Closing windows without roll-back function

1. Attempt to close the window again within a few seconds by holding the window regulator switch. The roll-back function is deactivated in the process.

   If the closing procedure takes longer than several seconds, the roll-back function will be reactivated. If it is still stiff or obstructed, the window will stop and open again automatically.
2. Go to a suitably qualified workshop if the window still cannot be closed. Volkswagen recommends using an authorised Volkswagen repairer.

⚠ WARNING

Closing the electric windows without the roll-back function can lead to severe injuries.
- Always take care when closing the windows.
- Close windows only when there is no-one in the operating path.
- Please note that the roll-back function does not prevent fingers and parts of the body being trapped against the window frame.

The roll-back function also takes place with convenience closing.

Troubleshooting

One-touch opening and closing does not work

One-touch opening and closing is deactivated if the 12-volt vehicle battery has been disconnected or discharged while the windows were not fully closed. The function will have to be reset.

1. Switch on the ignition.
2. Close all windows and doors.
3. Pull up the button for the window and hold it in this position for a few seconds.
4. Let go of the button, then pull it up again and hold it in this position.

One-touch opening and closing is now ready for operation.

The one-touch function can be restored for individual windows or for several windows at the same time.

Touch panels react differently than expected

Moisture, dirt and grease can impede the functioning of the touch panels.

1. Always keep touch panels clean and dry.

Adjusting the steering wheel position mechanically

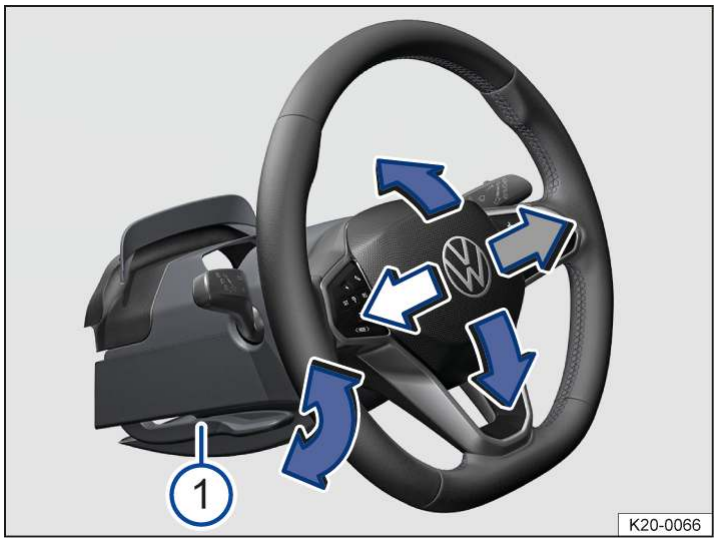

Fig. 1 Below the steering wheel in the steering column trim: lever for mechanical adjustment of the steering wheel position (illustration).

Fig. 2 On the steering wheel: 9 o'clock and 3 o'clock position (illustration).

Adjust the steering wheel position before setting off and only when the vehicle is stationary → ⚠.

1. Push down the lever → *Fig. 1* (1).
2. Adjust the steering wheel so that you can hold it with both hands at its outer edge at the 9 o'clock and 3 o'clock positions → *Fig. 2* with your arms slightly bent.
3. Push the lever up firmly until it is flush with the steering column trim → ⚠.

⚠ WARNING

Incorrect use of the steering wheel position adjustment and incorrect adjustment of the steering wheel can cause serious or fatal injuries.

- After adjusting the steering wheel, always move the lever → *Fig. 1* (1) up firmly. This prevents the steering wheel from moving accidentally while the vehicle is in motion.
- Never adjust the steering wheel when the vehicle is in motion. If you determine that adjustment is necessary when driving, stop the vehicle safely and adjust the steering wheel to the correct position.
- The steering wheel must always point towards the chest and not towards the face. This ensures that the driver front airbag provides maximum protection in the event of an accident.
- While driving, always keep both hands on the outside of the steering wheel at the 9 o'clock and 3 o'clock positions → *Fig. 2*. This reduces the risk of injury if the driver front airbag is triggered.
- Never hold the steering wheel at the 12 o'clock position, or in any other manner, e.g. at the hub of the steering wheel. If the driver front airbag is triggered, you could receive severe injuries to the arms, hands and head.

Introduction to the topic

The following section describes the options for adjusting the front seats. Always ensure that your sitting position is correct *(→ Sitting position)*.

WARNING

Driving with an incorrect seating position caused by wrongly adjusted seats can lead to serious injuries.

- Always adjust the front seats to their correct position before any journey, and ensure that all passengers have fastened their seat belts correctly.
- Push the front passenger seat as far back as possible.

WARNING

Incorrect adjustment of the seats can cause accidents and serious injuries.

- Adjust the seats only when the vehicle is stationary. The seats could change position unexpectedly if you attempt to reposition them while the vehicle is in motion so that you lose of control of the vehicle as a result. Furthermore, an incorrect sitting position is adopted while adjusting the seat.
- Adjust the height and angle of the front seats or move them forwards and backwards only when there is no-one in the adjustment range of the seats.
- The adjustment range of the seats must not be restricted by any items.
- The areas for adjusting and locking the seats must not be soiled.

WARNING

Improper use of seat covers or protective covers may lead to the electrical seat controls being operated accidentally and the front seats moving unexpectedly while the vehicle is moving. You could lose control over the vehicle. This could result in serious injury and accidents. Furthermore, this may result in damage to the electrical components in the front seats.

- Never fit seat or protective covers on the electric controls.
- Do not fit seat covers or protective covers over the seats unless they have been expressly approved for use in the vehicle.

WARNING

Any lighters in the vehicle could be damaged or accidentally lit. This could lead to serious burns and other injuries.

- Before adjusting the seats, always make sure that there is no cigarette lighter on or near the movable parts of the seat.

NOTICE

Sharp edges can damage the seats.

- Do not touch the seats with sharp-edged objects. Sharp objects, such as zips, rivets on clothing or belts, may damage surfaces. Open Velcro fasteners may also cause damage.

Mechanically adjusting the front seat

The following section contains a description of all possible controls. The number of controls may vary depending on the version of the seat.

The controls are mirrored for the front passenger seat.

Fig. 1 Driver's seat: controls

1. To adjust the seat backrest, relieve the pressure on the backrest and turn the handwheel.
2. To adjust the seat height, move the lever up or down, repeating several times if necessary.
3. To move the front seat forward or back, pull the lever. The front seat must engage after you release the lever!
4. To adjust the armrest up or down, press the button at the side or bottom.

   If the armrest is not being used, it can be folded up without pressing the button.
5. **Only for electric seats, depending on equipment:**

   To move the seat cushion forwards or backwards, lift the handle.

Electrically adjusting the front seat

The electric controls are country-specific and depend on the vehicle equipment and may vary depending on the seat type.

The controls are mirrored for the front passenger seat.

The seat may have a combination of mechanical and electrical controls.

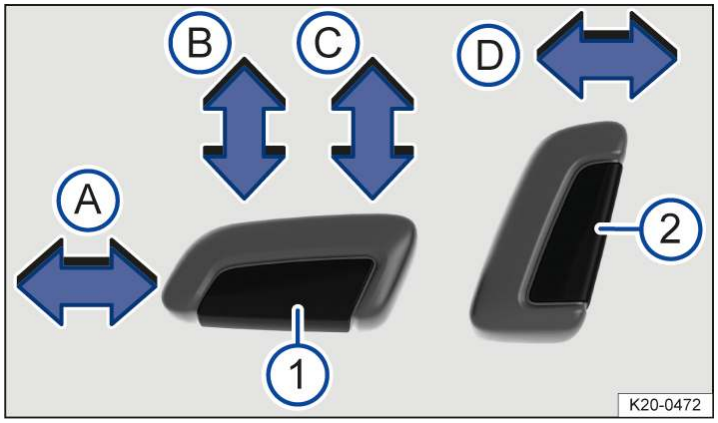

Fig. 1 Switches on the driver seat: adjusting the front seat forwards or backwards, adjusting the backrest and the seat cushion height and tilt.

Pressing the switch in the direction of the arrow:

1 A Slides the seat forwards or backwards.

B Adjusts the angle of the seat cushion.

C Raises or lowers the seat.

2 D Adjusts the angle of the backrest.

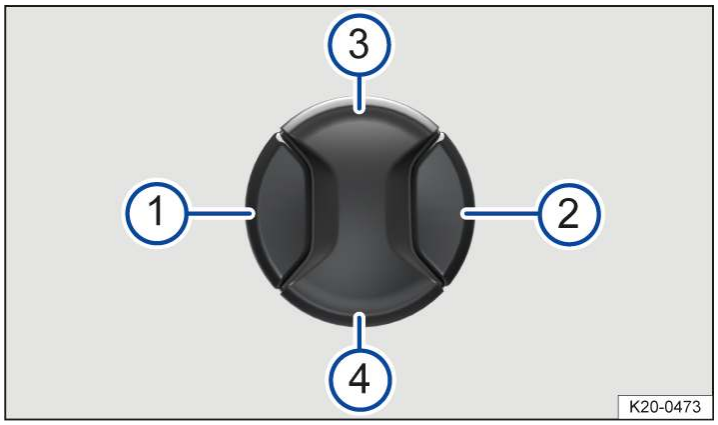

Fig. 2 Switch on the driver seat: adjusting the lumbar support.

Pressing the switch in the appropriate area:

1 Adjust the curve of the lumbar support forwards.

2 Adjust the curve of the lumbar support backwards.

3 Adjust the curve of the lumbar support upwards.

4 Moves the curve of the lumbar support down.

WARNING

Careless or unsupervised use of the electric front seats can result in severe injuries.

- The electrical front seat adjustment also works when the ignition is switched off. Never leave children or people requiring assistance alone in the vehicle.
- In the event of an emergency, stop electrical adjustment by pressing another switch.

NOTICE

Improper use can damage the electric components in the front seats.

- Do not kneel on the front seats and do not apply point loads to the seat cushion and backrest.

It may not be possible to adjust the seat electrically if the charge level of the 12-volt vehicle battery is too low.

The seat adjustment procedure will be interrupted if the vehicle's drive system is activated.

Introduction to the topic

The following section describes the options for adjusting the rear seats. Always ensure that your sitting position is correct *(→ Sitting position)*.

WARNING

Incorrectly adjusted rear seats increase the risk of serious injuries in the event of an accident.

- Before all journeys, make sure that the rear seats are adjusted so that all occupants are sitting upright and with the seat belts fastened correctly.
- The rear seats must be adjusted only when there is no one in the adjustment area of the rear seats.

WARNING

If you adjust the rear seats while the vehicle is in motion, you will assume an incorrect sitting position. The rear seats may also move unexpectedly while the vehicle is in motion. In an accident, there is then an increased risk of serious injuries.

- Adjust the rear seats only when the vehicle is stationary.

WARNING

Any lighters in the vehicle could be damaged or accidentally lit. This could lead to serious burns and other injuries.

- Before adjusting the seats, always make sure that there is no cigarette lighter on or near the movable parts of the seat.

WARNING

Incorrect use of the rear centre armrest can cause serious injuries.

- The centre seat on the rear bench seat must never be used when the centre armrest is folded down – neither by adults nor children.
- Never transport an adult or child on the centre armrest.

NOTICE

When the rear seat is moved, objects in the luggage compartment can get into the space between the seat and the luggage compartment floor and cause damage.

- Before moving the rear seat, remove all objects that are located in the space between the seat and luggage compartment floor.

NOTICE

Sharp edges can damage the seats.

- Do not touch the seats with sharp-edged objects. Sharp objects, such as zips, rivets on clothing or belts, may damage surfaces. Open Velcro fasteners may also cause damage.

Folding the backrest of the rear bench seat forwards and backwards

The rear seat backrest is split. Each part of the rear seat backrest can be folded down to increase the size of the luggage compartment.

Folding rear seat backrest forwards with the release button

Fig. 1 In the rear seat backrest: release button.

1. Push the head restraint all the way down.
2. Pull the release button → *Fig. 1* (1) forwards and fold the rear seat backrest forwards at the same time.

   The respective section of the rear seat backrest is unlocked when the red marking → *Fig. 1* (2) is visible.

Folding back the rear seat backrest

1. Fold back the rear seat backrest and push it firmly into the catch until it engages securely into place → ⚠.

   The red marking → *Fig. 1* (2) must no longer be visible.

⚠ WARNING

Injuries can be caused if the rear seat backrest is folded forwards and backwards without due care and attention.

- While folding the rear seat backrest forward, always make sure that no people or animals are in its path.
- Never fold the rear seat backrest forwards or backwards while the vehicle is in motion.
- Ensure that the seat belt is not trapped or damaged when folding back the rear seat backrest.
- Always keep hands, fingers, feet and other body parts away from the swivel area when folding the rear seat backrest forwards and backwards.
- Ensure that each rear seat backrest engages securely, otherwise the seat belts for the rear seats will not offer maximum protection. This applies to the centre seat of the rear bench seat in particular. If a seat is occupied and the corresponding rear seat backrest has not clicked securely into place, the seat occupant and rear seat backrest may move forwards in the event of a sudden braking or driving manoeuvre or during accidents.
- The rear seat backrest has not engaged properly if you can see a red marking → *Fig. 1* (2). Always make sure that the red mark is never visible when the rear seat backrest is in the upright position.
- If the rear seat backrest is folded forwards or is not engaged securely into place, passengers must not use these seats.

NOTICE

Damage to the vehicle, vehicle components, particularly the seat belts and their components, or to other objects could be caused if the rear seat backrest is folded forwards and backwards in an uncontrolled way or without due care.

- Before folding the rear seat backrests forwards, always adjust the front seats so that the rear head restraints or rear seat cushions do not collide with the front seats.
- Before folding the rear seat backrest forward, make sure that there is no latch plate of a seat belt in a belt buckle.
- Before folding down the rear seat backrest, always make sure that there are no objects located in its path.

Introduction to the topic

The following section describes the options for adjusting and removing the head restraints. Always ensure that your sitting position is correct *(→ Sitting position)*.

Every seat is fitted with a head restraint. The head restraints are approved specifically for the respective seat and must not be installed at any other seat in the vehicle.

If a seat is occupied, select the correct head restraint setting for the respective head restraint. If a seat is unoccupied, the respective head restraint can be pushed down as far as it will go.

The rear centre head restraint (depending on vehicle equipment) is designed solely for use with the centre seat on the rear bench seat. Therefore you should not install this head restraint in any of the other positions.

There are notches in the rods of the head restraints which enable them to engage in different positions. Only correctly mounted head restraints can engage in the notches in the adjustment area. To prevent accidental removal of the head restraints after installation, stops are fitted at the top and bottom of the adjustment area.

Correct head restraint adjustment

Adjust the head restraint so that its upper edge is at the same height as the top of the head, but not lower than eye level. Position the back of your head as close to the head restraint as possible.

Head restraint adjustment for shorter people

Push the head restraint all the way down, even if the head is then underneath the top edge of the head restraint. There may be a small gap between the head restraint and backrest in the lowest position.

Head restraint adjustment for taller people

Push the head restraint up as far as it will go.

WARNING

Driving without head restraints or with incorrectly adjusted head restraints increases the risk of severe or fatal injuries in the event of an accident or sudden driving or braking manoeuvre.

- If a seat is occupied, the head restraint for that seat must always be fitted and adjusted correctly.
- If a seat is occupied, adjust the head restraint corresponding to the size of the person sitting on the seat.
- Never adjust the head restraint when the vehicle is in motion.

NOTICE

If you do not remove and fit the head restraints properly, this can result in damage.

- When removing or fitting head restraints, make sure that they do not hit the roof, the front seat backrest or other parts of the vehicle.

Adjusting the head restraints

Adjusting the height of the front head restraint

Fig. 1 Adjusting a front head restraint (illustration).

1. While pressing the → *Fig. 1* (1) button, push the head restraint up or down in the direction of the arrows.

The head restraint must securely engage in the top position or other intermediary position. In the lowest position, where the guide pin is completely inserted into the guide rail, the head restraint does not engage properly.

Adjusting the height of the rear head restraint

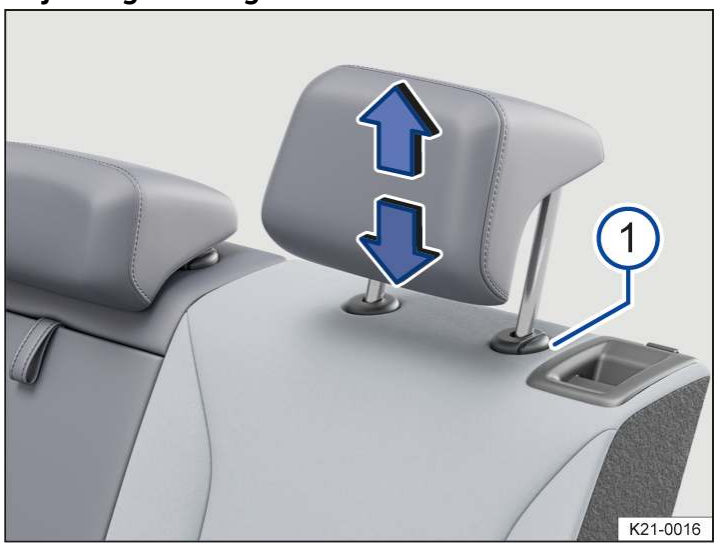

Fig. 2 Adjusting a rear head restraint (illustration).

1. While pressing the button → *Fig. 2* (1) if necessary, push the head restraint up or down in the direction of the arrows.

The head restraint must engage securely into position.

Removing and installing the head restraints

Removing the front head restraints

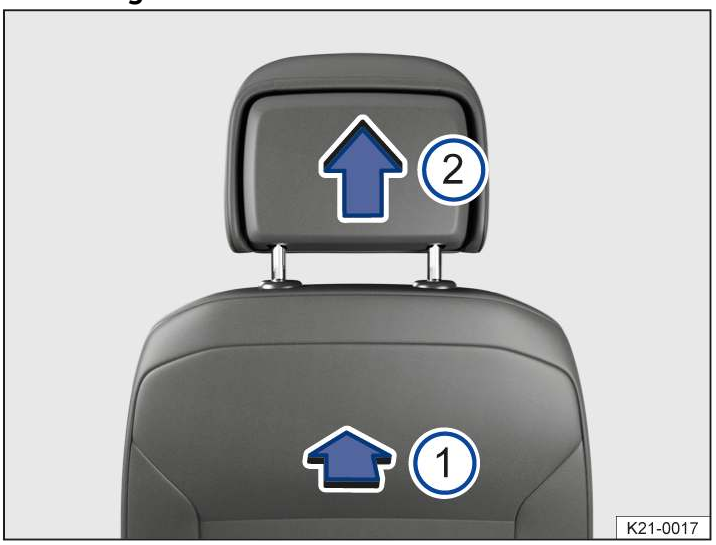

Fig. 1 Removing a front head restraint (illustration).

1. If necessary, lower the head restraint.
2. To release the head restraint, feel for the recess in the marked area → *Fig. 1* (1) on the rear side, press in and hold in the direction of the arrow.
3. Pull the head restraint out in the direction of the arrow → *Fig. 1* (2).

Fitting the front head restraints

1. Position the head restraint correctly over the head restraint guides and then insert into the guides of the corresponding seat backrest.
2. Push the head restraint down until the guide pins click into place.
3. Adjust the head restraint so a correct sitting position can be assumed.

Removing the rear head restraints

Fig. 2 Removing a rear head restraint (illustration).

1. If necessary, adjust the backrest so that the head restraint can be removed.
2. Push the head restraint all the way up.
3. Pull the head restraint out fully while pressing the button → *Fig. 2* (1).

Fitting the rear head restraints

1. Release the rear seat backrest and fold the backrest forwards slightly.
2. Position the head restraint correctly over the head restraint guides and then insert into the guides of the corresponding seat backrest.
3. Press and hold the button → *Fig. 2* (1) and push down the head restraint.
4. Fold back the rear seat backrest and allow it to engage securely.
5. Adjust the head restraint so a correct sitting position can be assumed.

Centre armrest

Rear centre armrest

Fig. 1 In the backrest of the middle seat: fold-out rear centre armrest.

There may be a centre armrest in the rear bench seat that can be folded out of the middle seat .

— To fold down: pull the loop on the centre armrest in the direction of the arrow → *Fig. 1*.

— To fold back: fold the centre armrest upwards in the opposite direction of the arrow → *Fig. 1* and push it into the backrest as far as it will go.

Do not use the middle seat on the rear bench seat to transport passengers when the centre armrest is folded down.

⚠ WARNING

Incorrect use of the rear centre armrest can cause serious injuries.

- The centre seat on the rear bench seat must never be used when the centre armrest is folded down – neither by adults nor children.
- Never transport an adult or child on the centre armrest.

⚠ WARNING

Unsecured or incorrectly secured objects in the rear centre armrest can be thrown around during sudden braking or driving manoeuvres and cause serious injuries.

- Stow objects, e.g. drinks, in the available stowage places. *(→ Stowage areas)*.

NOTICE

Improper handling of the rear centre armrest can cause damage to the seat and the centre armrest.

- Remove all objects before folding back the rear centre armrest.

Memory function

Memory buttons

Fig. 1 On the outside of the driver seat: memory buttons.

The memory buttons can be used to store and recall settings for the driver seat and the exterior mirrors.

Storing driver seat and exterior mirror settings for driving forwards

1. Switch on the electronic parking brake.
2. Put the gearbox into neutral.
3. Switch on the ignition.
4. Adjust the driver seat and exterior mirrors.
5. Press the SET → *Fig. 1* button for longer than 1 second.
6. Within approximately 10 seconds, press the desired memory button → *Fig. 1*.

   An acoustic signal confirms that the settings have been stored.

Storing the front passenger exterior mirror settings for reversing

1. Switch on the electronic parking brake.
2. Put the gearbox into neutral.
3. Switch on the ignition.
4. Press the desired memory button → *Fig. 1*.
5. Select reverse gear.
6. Adjust the exterior mirror on the front passenger side so that you have a good view of the kerb area, for example.

   The set mirror position is saved automatically and assigned to the user account.

Opening the driver seat and exterior mirror settings

1. When the vehicle is stationary, the ignition is switched off and one vehicle door is open, briefly press the corresponding memory button.

   After around 10 minutes, the stored positions can no longer be adjusted automatically. The adjustment process is cancelled if one of the memory buttons is pressed again.

   Or: with the ignition switched on or the vehicle door closed, press and hold the corresponding memory button until the stored positions have been reached.

The front passenger exterior mirror will leave the position saved for reversing automatically if the vehicle drives forwards at a speed of at least around 15 km/h (around 10 mph) or if you turn the rotary knob for the exterior mirror out of the **R** position and into another position.

If you open the driver door later than approximately 10 minutes after unlocking the vehicle, the driver seat and exterior mirrors are not automatically adjusted.

Front seat convenience entry function

Variant 1: when the driver door is opened, the driver seat automatically moves to a position which makes it easy to enter the vehicle. The driver seat moves back to its original position automatically as soon as the driver door is closed and the ignition is switched on.

Variant 2: before you get out of the vehicle, the driver seat automatically moves to the rear position and remains there. After you get in again and close the driver door, the driver seat moves forward to the position that was stored last.

The convenient entry function can be switched on and off in the Infotainment system → ⚠.

Personalisation

You can save and access your individual seat setting in a user account via the personalisation function .

After switching off the ignition and locking the vehicle, the driver seat and exterior mirror settings are stored in the user account.

The driver seat and exterior mirror settings are restored after the vehicle is unlocked and the driver door is opened.

The seat responds to selecting or changing a user account as follows:

— Vehicle stationary or moving no faster than around 5 km/h (around 3 mph): seat is moved. You can cancel the movement at any time by tapping the appropriate function button in the Infotainment system or by pressing a button on the driver seat.

— Vehicle moving faster than around 5 km/h (around 3 mph): seat is not moved. All other settings are made.

Some settings can be stored in the user accounts of the personalisation function and therefore change automatically when the user account changes .

⚠ WARNING

Incorrect use of the seat functions can cause serious injuries.

- Always assume the correct sitting position before the start of the journey and maintain this position during the journey. This also applies to all passengers.
- Adjust the memory function only when the vehicle is stationary.
- Keep hands, fingers, feet and other body parts away from seat's moving parts and adjustment range.

Massage function

Fig. 1 On the outside of the driver seat: button for the massage function.

When the massage function is switched on, the lumbar support moves and massages the lumbar region.

The curvature of the lumbar support (massage intensity) can be individually adjusted in three levels during operation by repeatedly pressing the corresponding switch *(→ Front seat, electric)*.

Switching the massage function on and off

1. To switch on, press the button in the seat control panel. To switch off, press the button again.

The massage function is switched off automatically after approximately 10 minutes.

WARNING

Incorrect use of the seat functions can cause serious injuries.

- Always assume the correct sitting position before the start of the journey and maintain this position during the journey. This also applies to all passengers.
- Switch the massage function on and off only when the vehicle is stationary.
- Keep hands, fingers, feet and other body parts away from seat's moving parts and adjustment range.

Switching turn signals on and off

Fig. 1 On the left-hand side of the steering column: lever for turn signal, main beam and wipers.

(A) Indicate right ➡.

(B) Indicate left ⬅.

Switching turn signals on and off

1. Switch on the ignition.
2. Move the lever from the centre position to the required position → *Fig. 1*.
3. To switch off the turn signal, move the lever to the basic position.

Go to a suitably qualified workshop and have the vehicle checked if the acoustic signal does not sound when a turn signal is switched on. Volkswagen recommends using an authorised Volkswagen repairer.

Convenience turn signal

1. Push the lever up or down to the point where you encounter resistance and then release the lever.

   The turn signal flashes three times.

To cancel the lane change flash, immediately move the lever in the opposite direction up to the pressure point and then release it.

The convenience turn signal can be activated and deactivated in the vehicle settings in the Infotainment system *(→ Vehicle settings menu)*.

⚠ WARNING

Incorrect use of turn signals, a failure to use turn signals, or forgetting to switch off a turn signal can confuse other road users. This can cause accidents and serious or fatal injuries.

- Always activate the turn signal in good time when changing lanes and performing overtaking or turning manoeuvres.
- Always switch off the turn signal once the lane change or overtaking or turning manoeuvre has been completed.

The hazard warning lights also work when the ignition is switched off.

Some settings can be stored in the personalised user accounts and therefore change when the user account changes.

Switching lights on and off

Fig. 1 Next to the steering wheel: touch panel for switching on the exterior lighting.

Switching lights on

1. Switch on the ignition.
2. Tap the function button as often as required until the corresponding indicator lamps light up.

The dipped beam headlights are switched on. The indicator lamp lights up green.

AUTO

Automatic lighting control: dipped beam is switched on or off depending on the brightness level → ⚠, *(→ Automatic lighting control)*.

Side lights switched on, the indicator lamp lights up green. The automatic lighting control function AUTO is activated from a speed of around 10 km/h (around 6 mph).

- -

Display only in the instrument cluster display: a text message appears stating that the lights are switched off. The automatic lighting control function AUTO is activated from a speed of around 10 km/h (around 6 mph) or when a distance of around 100 m (around 328 ft) has been covered.

Switching off the lights

1. Switch off the ignition.

AUTO

The orientation lighting can be switched on *(→ Orientation lighting)*.

Side lights or continuous parking light on both sides of the vehicle switched on . The indicator lamp lights up green.

- -

Display only in the instrument cluster display: a text message appears stating that the lights are switched off.

Daytime running lights

The daytime running lights can increase the visibility of the vehicle in traffic during the day.

If brightness is detected, the daytime running lights are switched on when the ignition is switched on.

The daytime running lights cannot be switched off or on manually as from a speed of around 10 km/h (around 6 mph).

NOTICE

The headlights may ice up at very low outside temperatures. Improper cleaning may damage the vehicle.

- Do not use excessively hard or abrasive cleaning tools.
- Thaw ice with a suitable de-icer or with Volkswagen Genuine de-icer.

WARNING

If the vehicle lighting is not switched on as appropriate for the weather conditions, the road will not be illuminated sufficiently. Other road users may have difficulty seeing the vehicle or may not see it at all. This can cause accidents and serious or fatal injuries.

- Always switch on dipped beam when it is dark or raining and when visibility is poor.
- Regularly check that all lights and turn signals are working properly.

WARNING

The side lights or daytime running lights are not bright enough to illuminate the road ahead and to ensure that other road users are able to see you in darkness, rain or snow and conditions with poor visibility. This can cause accidents and serious or fatal injuries.

- Always switch on dipped beam when it is dark or raining and when visibility is poor.

WARNING

The automatic lighting control function AUTO assists the driver. The driver is responsible for the vehicle lighting being switched on correctly. The automatic lighting control function AUTO switches the dipped beam headlights on and off when there is a change in the level of brightness. An insufficiently lit road can cause accidents and serious or fatal injuries.

- Switch the dipped beam on manually if required by the weather conditions, e.g. in the event of fog.

To illuminate the surroundings better when manoeuvring, the cornering lights are switched on for both sides of the vehicle when reverse gear is engaged.

Switching main beam on and off

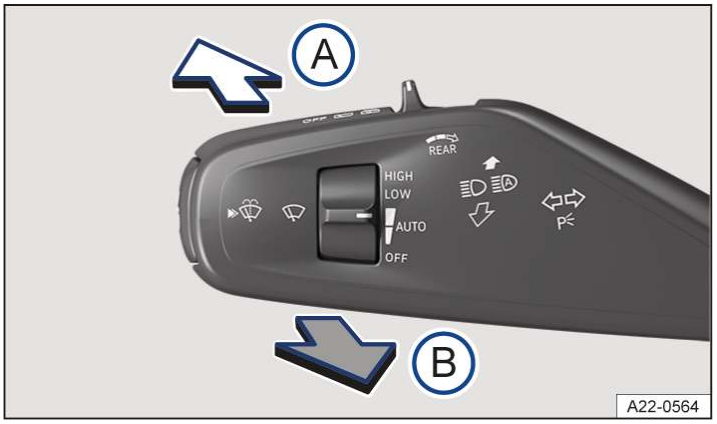

Fig. 1 On the left-hand side of the steering column: lever for turn signal, main beam and wipers.

(A) Switch on the main beam.

(B) Operate the headlight flasher or switch off the main beam.

When the main beam or headlight flasher is switched on, the blue indicator lamp lights up in the instrument cluster display → ⚠.

Switching on the main beam

1. Switch on the ignition.
2. Switch on dipped beam.
3. Press the lever forward from the centre position → *Fig. 1* (A).

Switching off the main beam

1. Pull the lever to the rear from the centre position → *Fig. 1* (B).

Switching the headlight flasher on and off

1. Pull the lever to the rear from the centre position and hold it → *Fig. 1* (B).

   Release the lever to switch off.

Main-beam control

Depending on the vehicle equipment, automatic main-beam control may be available *(→ Main-beam control (static))*, *(→ Main-beam control (dynamic))*.

⚠ WARNING

Using the main beam incorrectly can distract and dazzle other road users. This can cause accidents and serious or fatal injuries.

- Use main beam only if other road users cannot be distracted or dazzled.

Main-beam control (Light Assist)

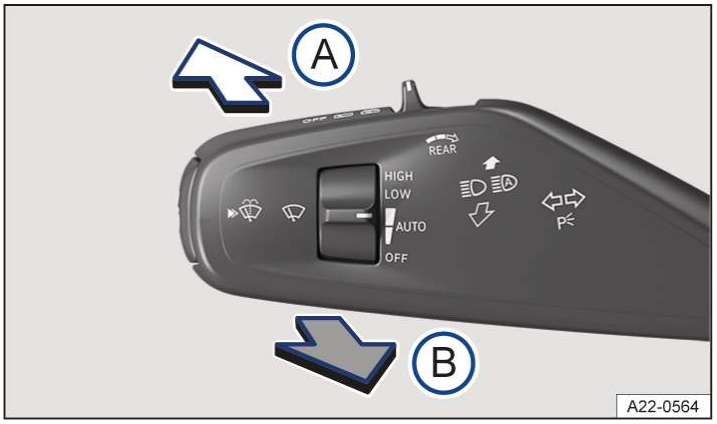

Fig. 1 On the left-hand side of the steering column: lever for turn signal, main beam and wipers.

Main-beam control (Light Assist) automatically dips the headlights when oncoming vehicles and vehicles driving in front are detected. Light Assist normally also recognises illuminated areas such as towns and deactivates main beam while driving through them.

Within the limits of the system, main beam is automatically switched on or off depending on the surroundings and traffic conditions and on the driving speed →.

Switching on Light Assist

1. Switch on the ignition.
2. Switch on automatic lighting control AUTO *(→ Dipped beam)*.
3. Tap the lever forward from the basic position → *Fig. 1* (A).

When Light Assist is activated, the indicator lamp lights up white in the instrument cluster display. When Light Assist is switched on, the indicator lamp for the main beam lights up blue in the instrument cluster display.

Switching off Light Assist

1. Switch off automatic lighting control AUTO *(→ Dipped beam)*.

   Or: if Light Assist is switched on and active, pull the lever back → *Fig. 1* (B).

   Or: if Light Assist is switched on and not active, tap the lever forward → *Fig. 1* (A). Manual main beam is now switched on. To switch off the manual main beam again, pull back the lever (B).

System limits

The main beam must be manually switched off under the following conditions, as it is not switched off by Light Assist in time or at all:

— In badly lit towns that the system cannot recognise as towns.

— In poorly lit streets where there are highly reflective signs.

— Other road users with insufficient lighting facilities, such as pedestrians, cyclists.

— In the case of crossing traffic at right-angled junctions.

— In tight bends, on steep hill crests or in dips in the road or when oncoming traffic is half-hidden.

— With oncoming traffic on streets with a central barrier where the driver can see clearly over the central barrier e.g. truck drivers.

— In fog, snow or heavy rain.

— In conditions where dust or sand has been blown up.

— Damage to the windscreen in the camera's field of vision.

— If the camera window is covered by condensation, dirt, a sticker, snow or ice.

— If the camera is switched off automatically due to a high ambient temperature or prolonged exposure to direct sunlight. When the camera is available again, Lane Assist will also be available once more.

— If the camera is faulty or the power supply is interrupted.

WARNING

Light Assist may not be able to recognise all driving situations correctly and may not work properly in certain situations. Light Assist supports the driver. The driver is responsible for the vehicle lighting being switched on correctly. Improperly switching on the main beam can distract and dazzle other road users. This can cause accidents and serious or fatal injuries.

- Always check the lighting yourself and adjust it to suit the light, visibility and traffic conditions.
- Switch off the main beam manually if it may cause dazzle to other road users.

WARNING

If the camera window is dirty, covered or damaged, the function of Light Assist may be impaired. This also applies if changes are made to the vehicle's lighting system, for example if additional headlights are fitted. This can cause accidents and serious or fatal injuries.

- Clean the camera window at regular intervals, and keep it free from snow and ice.
- Do not cover the camera window.
- Check the area of the windscreen which is in the camera's field of view for damage at regular intervals.

Advanced main-beam control (Dynamic Light Assist)

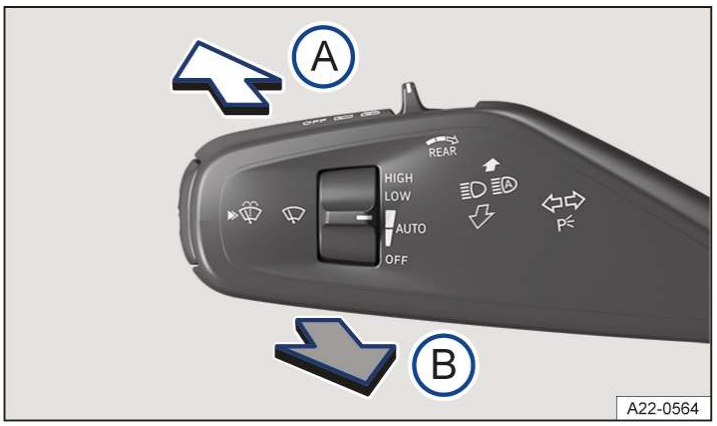

Fig. 1 On the left-hand side of the steering column: lever for turn signal, main beam and wipers.

Advanced main-beam control (Dynamic Light Assist) provides maximum illumination for the road and the edges of the road. At the same time, it prevents vehicles in front or oncoming vehicles from being dazzled. The system uses a camera to detect other self-illuminated road users and their distance from your vehicle and deactivates areas within the light distribution in a targeted manner. If the system can no longer prevent other road users from being dazzled, main beam is switched off completely. Dynamic Light Assist normally also recognises illuminated areas such as towns and deactivates main beam while driving through them.

Within the limits of the system, main beam is automatically switched on or off depending on the surroundings and traffic conditions and on the driving speed → ⚠.

Dynamic Light Assist can be activated and deactivated in the vehicle settings in the Infotainment system *(→ Vehicle settings menu)*.

Switching on Dynamic Light Assist

1. Switch on the ignition.
2. Switch on automatic lighting control AUTO *(→ Dipped beam)*.
3. Tap the lever forward from the basic position → *Fig. 1* (A).

When Dynamic Light Assist is activated, the indicator lamp lights up white in the instrument cluster display. When Dynamic Light Assist is switched on, the indicator lamp for main beam lights up blue in the instrument cluster.

Switching off Dynamic Light Assist

1. Switch off automatic lighting control AUTO *(→ Dipped beam)*.

   Or: if Dynamic Light Assist is switched on and active, pull the lever back → *Fig. 1* (B).

   Or: if Dynamic Light Assist is switched on and not active, tap the lever forward → *Fig. 1* (A). Manual main beam is now switched on. To switch off the manual main beam again, pull back the lever.

System limits

The main beam must be manually switched off under the following conditions, as it is not switched off by Dynamic Light Assist in time or not at all:

— In badly lit towns that the system cannot recognise as towns.

— In poorly lit streets where there are highly reflective signs.

— Other road users with insufficient lighting facilities, such as pedestrians, cyclists.

— In the case of crossing traffic at right-angled junctions.

— In tight bends, on steep hill crests or in dips in the road or when oncoming traffic is half-hidden.

— With oncoming traffic on streets with a central barrier where the driver can see clearly over the central barrier e.g. truck drivers.

— In fog, snow or heavy rain.

— In conditions where dust or sand has been blown up.

— Damage to the windscreen in the camera's field of vision.

— If the camera window is covered by condensation, dirt, a sticker, snow or ice.

— If the camera is switched off automatically due to a high ambient temperature or prolonged exposure to direct sunlight. When the camera is available again, Dynamic Light Assist will also be available once more.

— If the camera is faulty or the power supply is interrupted.

⚠ WARNING

Dynamic Light Assist may not be able to recognise all driving situations correctly and may not work properly in certain situations. Dynamic Light Assist supports the driver. The driver is responsible for the vehicle lighting being switched on correctly. Improperly switching on the main beam can distract and dazzle other road users. This can cause accidents and serious or fatal injuries.

- Always check the lighting yourself and adjust it to suit the light, visibility and traffic conditions.
- Switch off the main beam manually if it may cause dazzle to other road users.

⚠ WARNING

If the camera window is dirty, covered or damaged, the function of Dynamic Light Assist may be impaired. This also applies if changes are made to the vehicle's lighting system, for example if additional headlights are fitted. This can cause accidents and serious or fatal injuries.

- Clean the camera window at regular intervals, and keep it free from snow and ice.
- Do not cover the camera window.
- Check the area of the windscreen which is in the camera's field of view for damage at regular intervals.

Dynamic cornering light

The dynamic cornering light permits optimum illumination of the road.

The dynamic cornering light works only when the automatic lighting control AUTO is switched on and at speeds above around 10 km/h (around 6 mph).

The dynamic cornering light can be activated and deactivated in the vehicle settings in the Infotainment system *(→ Vehicle settings menu)*.

Switching poor weather light on and off

The poor weather light allows the driver to improve illumination of the road in poor visibility conditions.

The poor weather light can be switched on only when the ignition is switched on.

Switching on poor weather light

1. Switch on the ignition.
2. Tap button *(→ Dipped beam)*.

The indicator lamp in the button lights up green. In addition, the indicator lamp lights up for a few seconds in the instrument cluster display.

Switching off poor weather light

1. Press the button again.

If the poor weather light is switched on with switched-off lights, switched-on side lights or switched-on automatic lighting control AUTO, the dipped beam headlights will also be switched on regardless of the ambient brightness level.

Troubleshooting

Turn signal indicator lamp

The indicator lamp flashes green.

If a turn signal on the vehicle has failed, the indicator lamp will start flashing twice as fast.

1. Check the lighting and change the appropriate bulb as required *(→ Exterior lighting)*.
2. If the fault persists, go to a suitably qualified workshop. Volkswagen recommends using an authorised Volkswagen repairer.

Exterior drive lighting not working

The indicator lamp lights up yellow.

Vehicle lighting not working partially or completely.

1. Check the lighting and change the appropriate bulb as required *(→ Exterior lighting)*.
2. If the fault persists, go to a suitably qualified workshop. Volkswagen recommends using an authorised Volkswagen repairer.

Fault in rain and light sensor

The indicator lamp lights up yellow.

When automatic lighting control (AUTO) is switched on, the vehicle lighting is not switched on or off automatically.

1. Switch the ignition off and on.
2. If the fault persists, go to a suitably qualified workshop. Volkswagen recommends using an authorised Volkswagen repairer.

Dynamic cornering light

In vehicles with driving profile selection, the selected driving profile can affect the swivelling motion of the lights.

A corresponding display appears in the instrument cluster if there is a dynamic cornering light fault. Go to a suitably qualified workshop. Volkswagen recommends using an authorised Volkswagen repairer.

Touch panels react differently than expected

Moisture, dirt and grease can impede the functioning of the touch panels.

1. Always keep touch panels clean and dry.

Light assist systems do not react as expected

Travel mode deactivates the dynamic cornering light.

1. Make sure that travel mode is not activated when it is not needed *(→ Vehicle settings menu)*.

Switching the rear fog light on and off

The rear fog light can only be switched on when the ignition is switched on *(→ Dipped beam)*.

Switching on the rear fog light

1. Tap the REAR function button.

   The indicator lamp in the button lights up. The indicator lamp in the instrument cluster display additionally lights up yellow.

Switching off the rear fog light

1. Tap the REAR function button again.

If the rear fog light is switched on with switched-off lights, switched-on side lights or switched-on automatic lighting control AUTO, the dipped beam headlights will be switched on independently of the ambient brightness level.

Side lights

When the side lights are switched on, both headlights light up with side lights together with parts of the tail light clusters, the number plate light and various buttons in the vehicle interior. The automatic lighting control is activated from a speed of around 10 km/h (6 mph) or when a distance of about 100 m (around 328 ft) has been driven.

If the vehicle is not locked from outside when the ignition is switched off and the side lights are switched on, the continuous parking light on both sides of the vehicle switches on automatically after around 10 minutes to reduce the load on the 12-volt vehicle battery *(→ Parking light)*.

Automatic switch-off of side lights and parking lights

The vehicle detects a weak 12-volt battery and switches off the side lights or parking lights in good time so that the vehicle's drive system can still be activated – however, at the earliest after two hours.

If the battery capacity is not sufficient for the side lights or parking light to remain switched on for two hours, the 12-volt vehicle battery may discharge so far that the vehicle's drive system can no longer be activated →⚠.

⚠ WARNING

Accidents and serious or fatal injuries can occur if the vehicle is parked without sufficient illumination, as other road users might have difficulty seeing the vehicle, or may not see it at all.

- Always park the vehicle safely and with sufficient lighting.
- Observe any applicable country-specific legal requirements.
- Switch on the parking light on the right or left side if possible if illumination of the vehicle for several hours is necessary.

Switching parking lights on and off

Fig. 1 On the left-hand side of the steering column: lever for turn signal, main beam and wipers.

(A) Right-hand parking light P⊂ is switched on.

(B) Left-hand parking light P⊂ is switched on.

Switching one-sided parking lights on and off

When the parking lights are switched on, the headlight with side light and parts of the tail light cluster on the corresponding side of the vehicle light up. The activation duration of the one-sided parking light is generally twice that of the continuous parking light on both sides.

1. Switch off the ignition.
2. Move the lever from the centre position to the desired position → *Fig. 1*.
3. To switch off the one-sided parking light, move the lever to the basic position.

Switching the continuous parking light on both sides of the vehicle on and off

Both headlights light up with side lights as well as parts of the tail light clusters if continuous parking light on both sides of the vehicle is switched on:

1. Switch on the side lights ⊃⊂ .
2. Switch off the ignition.
3. Lock the vehicle from outside.
4. To switch off the continuous parking light on both sides of the vehicle, unlock the vehicle from the outside.

Automatic switch-off of side lights and parking lights

The vehicle detects a weak 12-volt battery and switches off the side lights or parking lights in good time so that the vehicle's drive system can still be activated – however, at the earliest after two hours.

If the battery capacity is not sufficient for the side lights or parking light to remain switched on for two hours, the 12-volt vehicle battery may discharge so far that the vehicle's drive system can no longer be activated → ⚠.

⚠ WARNING

Accidents and serious or fatal injuries can occur if the vehicle is parked without sufficient illumination, as other road users might have difficulty seeing the vehicle, or may not see it at all.

- Always park the vehicle safely and with sufficient lighting.
- Observe any applicable country-specific legal requirements.
- Switch on the parking light on the right or left side if possible if illumination of the vehicle for several hours is necessary.

Entry and exit lighting (orientation lighting)

The entry and exit lighting illuminates the area immediately surrounding the vehicle when you get in or out of the vehicle.

Switching on entry lighting

1. Unlock the vehicle when the automatic lighting control function AUTO is switched on.

Switching off entry lighting

1. Automatically after the set switch-off delay has elapsed.

   Or: lock the vehicle.

   Or: tap the MODE button repeatedly until the light is switched off.

   Or: switch on the ignition.

Switching on exit lighting

1. Switch off the ignition.

The exit lighting is switched on if the automatic lighting control functionAUTO is switched on.

The switch-off delay starts when the last vehicle door or the boot lid is closed.

Switching off exit lighting

1. Switch on the ignition.

   Or: tap the MODE button repeatedly until the light is switched off.

   Or: automatically after the set switch-off delay has elapsed.

   Or: automatically if a vehicle door or the boot lid is opened approximately 30 seconds after switch-on.

Adjusting entry and exit lighting

The switch-off delay can be set and the function activated or deactivated in the vehicle settings in the Infotainment system *(→ Vehicle settings menu)*.

Depending on the equipment, the behaviour of the exterior lighting can be set in the vehicle settings in the Infotainment system.

It is possible to choose between two display strategies in the **Convenience light settings** menu:

— Classic entry and exit lighting.

  The surround lighting, headlights and tail light clusters are switched on and off simultaneously.

— Dynamic entry and exit lighting.

  The surround lighting, headlights and tail light clusters are switched on and off dynamically and in some cases with animation.

  Switching on of the entry lighting when the vehicle is approached can be activated or deactivated on vehicles with the keyless locking and starting system Keyless Access.

Some settings can be stored in the personalised user accounts and therefore change when the user account changes.

Cornering light

When dipped beam is switched on, a cornering light is switched on when turning slowly or driving around very tight bends.

When reverse gear is engaged, the cornering light on both sides of the vehicle switches on to provide better illumination of the surrounding area when manoeuvring.

Automatic lighting control

When the automatic lighting control AUTO is switched on, the vehicle lighting and the instrument and switch lighting will switch on under the following conditions:

— The light sensor has detected darkness.

— The windscreen wipers have been switched on for an extended period.

When the lights are switched on, the indicator lamp AUTO lights up yellow *(→ Dipped beam)*.

The automatic lighting control is merely an aid and will not always be able to detect all driving situations.

In vehicles with a corresponding equipment level, the switch-on time of the automatic headlights can be set in the vehicle settings in the Infotainment system *(→ Vehicle settings menu)*.

Headlight range control

Fig. 1 In the Infotainment system: touch slider for headlight range control.

(1) Touch slider for headlight range control.

Headlight range control can be used to adjust the light cone of the dipped beam headlights to the vehicle load level. This gives the driver the best visibility possible and means that oncoming traffic will not be dazzled.

Depending on the vehicle equipment, the headlight range can be adjusted in the Infotainment system → *Fig. 1* (1) *(→ Vehicle settings menu)* , → ⚠.

Manual headlight range control

Adjustment using the touch slider in the Infotainment system:

1. Tap the Vehicle function button.
2. Tap the Lighting function button to open the **Headlight range control** menu option → *Fig. 1* (1).
3. Tap the required position (typical vehicle load level).

Setting in the Infotainment system

0

Front seats occupied and luggage compartment empty.

2

All seats occupied and luggage compartment empty.

4

All seats occupied and luggage compartment fully loaded.

6

Only the driver seat occupied and luggage compartment fully loaded.

Dynamic headlight range control

The headlight range cannot be adjusted manually if the vehicle has dynamic headlight range control. The headlight range is automatically adapted to suit the vehicle load level as soon as the headlights are switched on → ⚠.

⚠ WARNING

Heavy objects in the vehicle can change the ride height so that the headlights dazzle and distract other road users. This can cause accidents and serious or fatal injuries.

- Always adapt the light cone to the load level of the vehicle to avoid dazzling other road users.

⚠ WARNING

Failure or malfunction in the headlight range control can cause the headlights to dazzle or distract other road users. This can cause accidents and serious or fatal injuries.

- Have the headlight range control checked by a suitably qualified workshop as soon as possible. Volkswagen recommends using an authorised Volkswagen repairer.

Switching over headlights for driving abroad (travel mode)

If you have to drive a right-hand drive vehicle in a left-hand drive country, or vice versa, the dipped beam of vehicles with advanced main-beam control or dynamic cornering light may dazzle oncoming traffic. For this reason, the headlight alignment of vehicles with this equipment can be adjusted in the Infotainment system in the Vehicle settings menu (travel mode) *(→ Vehicle settings menu)*.

Adjustment of the headlights is not necessary on vehicles without advanced main-beam control and without dynamic cornering light.

Travel mode may only be used for a short period. Please contact a suitably qualified workshop if permanent alteration is required. Volkswagen recommends using an authorised Volkswagen repairer.

Acoustic warnings if lights are not switched off

When the ignition has been switched off and the driver door is opened, acoustic warnings will sound under the following conditions:

— If the parking light is switched on.

— If the side lights are switched on.

— If the rear fog light is switched on.

When the orientation lighting is switched on, no acoustic warning will be given as a reminder that a light is still switched on when leaving the vehicle *(→ Orientation lighting)*.

Instrument and switch lighting

The brightness of the instrument and switch lighting can be adjusted in the vehicle settings in the Infotainment system *(→ Vehicle settings menu)*.

Depending on equipment, it is possible to adjust the basic brightness level of the head-up display *(→ Head-up display)*.

The brightness setting is automatically adjusted to the changing ambient light conditions in the vehicle.

When the automatic lighting control AUTO is switched on, a sensor automatically detects the ambient brightness level and switches the dipped beam and the lighting in the instruments and switches on and off.

Interior and reading lights, background lighting

Fig. 1 In the roof console: touch-sensitive reading lights.

Switching the interior and reading lights on or off

Tap the corresponding symbol:

Switch the interior lights on or off.

Function switched off: the interior lights switch on automatically when the vehicle is unlocked or left.

Touch-sensitive reading lights with manual dimming function

There may be touch-sensitive reading lights in the roof console and above the rear doors, depending on the vehicle equipment *→ Fig. 1*. The individual reading lights can be switched on or off by tapping the light surface.

To activate the manual dimming function, keep touching the light surface until the desired brightness level is reached.

Glove box and luggage compartment lights

Depending on equipment, the glove box and luggage compartment may be equipped with lights.

The respective light will be switched on or off when the glove box or boot lid is opened or closed.

Background lighting

The background lighting provides indirect light in the various areas of the vehicle interior.

The brightness and, depending on equipment level, colour of the background lighting can be adjusted in the **Background lighting** menu in the Infotainment system *(→ Vehicle settings menu)*. If the setting **Auto** is selected, the colour of the background lighting changes depending on the driving profile setting.

If the ignition has been switched off, the lights go out when the vehicle is locked, or they switch off automatically after a few minutes. This prevents the 12-volt vehicle battery from discharging.

Some settings can be stored in the personalised user accounts and therefore change when the user account changes.

Operating the wiper lever

Fig. 1 On the left-hand side of the steering column: lever for turn signal, main beam and wipers.

The wipers function only when the ignition is switched on, the driver and front passenger doors are closed and the bonnet or boot lid are closed.

(1) Operating the front windscreen wipers
(2) Operating the front windscreen flick wipe function and the wash and wipe system.
(3) Operating the rear window wiper.

Switch on the windscreen wipers

1. Switch on the ignition.
2. Turn the switch to the required position → *Fig. 1* (1):

HIGH
Fast wipe.

LOW
Slow wipe.

AUTO
Vehicles without rain and light sensor: Interval wipe. There are two wiping interval settings.

Vehicles with rain and light sensor: Automatic wiping depending on the intensity of the rain. There are two settings for the sensitivity of the rain and light sensor.

Switching off the front windscreen wipers

1. Turn switch → *Fig. 1* (1) to the **OFF** position.

Flick wipe – switching short wiping on and off

1. Switch on the ignition.
2. Push the → *Fig. 1* (2) button to the first position and hold → ⚠.

To switch off the flick wipe function, release the button.

Switching the wash and wipe system on and off for cleaning the front windscreen

1. Switch on the ignition.
2. Push the → *Fig. 1* (2) button to the second position and hold → ⚠.

To switch off the wash and wipe system, release the button.

To avoid the smell of the washer fluid in the vehicle interior, Climatronic switches to air recirculation mode for around 30 seconds.

Switching on the rear window wiper

1. Switch on the ignition.
2. Move switch → *Fig. 1* (3) to the centre position .

   The wiper will wipe the window approximately every six seconds.

Switching off the rear window wiper

1. Move switch → *Fig. 1* (3) to the left to the **OFF** position.

Switching the wash and wipe system on and off for the rear window wiper

1. Switch on the ignition.
2. Move switch → *Fig. 1* (3) to the right position and hold → ⚠.

To switch off the wash and wipe system, release the button.

⚠ WARNING

Without adequate anti-freeze, the washer fluid may freeze onto the windscreen and obscure your view. This can cause accidents and serious or fatal injuries.

- At winter temperatures, use the window washer system only when adequate anti-freeze has been added.
- Never use the windscreen washer system at winter temperatures before the windscreen has been heated by the ventilation system.

⚠ WARNING

Worn or dirty windscreen wiper blades reduce visibility and increase the risk of accidents and severe injuries.

- Always change the wiper blades if they are damaged or worn and no longer clean the windscreen properly *(→ Wiper blades)*.

NOTICE

Incorrect handling of the wipers can lead to damage to the windscreen and wiper blades and also to the wiper motor.

- Before starting your journey and switching on the ignition, check to make sure that the wiper lever is in its basic position.
- Remove snow and ice from the wipers and windows.
- Always carefully loosen wiper blades that have become frozen onto the window.
- Do not switch on the wipers when the window is dry.

When switched on, the wipers will temporarily be switched to the next setting down when the vehicle is stationary.

If the driver door is opened when the vehicle is stationary, the windscreen wipers will move to their initial position and will be switched off. If the door is closed within a few seconds or the wiper lever is moved, the wipers will be switched back on again.

Some settings can be stored in the personalised user accounts and therefore change when the user account changes.

If the vehicle is parked during cold weather, the service position of the windscreen wiper may be helpful in order to be able to release the wiper blades better from the windscreen *(→ Wiper blades)*.

Wiper function

Window wipe/wash system for cleaning the windscreen or rear window

The window wipe/wash system cleans the windscreen or rear window with the wipers and washer fluid. To ensure that the system functions correctly in all weather conditions, sufficient anti-freeze must be added to the washer fluid *(→ Washer fluid)*.

NOTICE

Washer fluid without sufficient anti-freeze can freeze in the water-carrying hoses and washer fluid reservoir at low temperatures. This can result in damage to the washer fluid pump.

- Always use washer fluid with sufficient anti-freeze.

Automatic activation of the rear window wiper

The rear window wiper is switched on automatically when the windscreen wipers are switched on and reverse gear is engaged. Automatic activation when reverse gear is engaged can be activated and deactivated in the vehicle settings in the Infotainment system.

Rain and light sensor

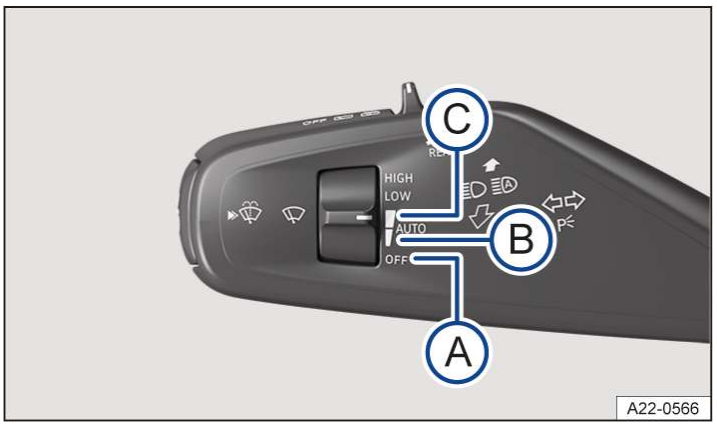

Fig. 1 On the left-hand side of the steering column: lever for turn signal, main beam and wipers.

(A) The rain and light sensor is deactivated.

(B) Rain and light sensor activated, setting 1.

(C) Rain and light sensor activated, setting 2.

When the rain and light sensor is activated, it automatically controls the frequency and speed of the wipers, depending on the intensity of the rain.

The automatic wipe function can be activated and deactivated in the vehicle settings in the Infotainment system *(→ Vehicle settings menu)* → ⚠.

Activating the rain and light sensor

1. Switch on the ignition.
2. Turn the switch to the required position → *Fig. 1*:
   — Position (B): Low sensitivity of the rain and light sensor.
   — Position (C): High sensitivity of the rain and light sensor.

If the automatic wipe function is deactivated in the Infotainment system, the intervals are set at fixed levels.

Deactivating the rain and light sensor

1. Turn the switch to position → *Fig. 1* (A).

⚠ WARNING

The rain and light sensor cannot always detect all precipitation sufficiently and activate the wipers. If visibility is restricted, this can cause accidents and serious or fatal injuries.

- If necessary, switch on the wipers manually if the water on the windscreen restricts the field of vision.

Some settings can be stored in the personalised user accounts and therefore change when the user account changes.

Troubleshooting

Washer fluid level too low

The indicator lamp lights up yellow.

1. Fill up the washer fluid reservoir as soon as possible *(→ Washer fluid)*.

Fault in wipers

The indicator lamp lights up yellow.

1. Go to a suitably qualified workshop. Volkswagen recommends using an authorised Volkswagen repairer.

Fault in rain and light sensor

The indicator lamp lights up yellow.

The wipers are not switched on automatically if it rains during rain and light sensor operation.

1. Go to a suitably qualified workshop. Volkswagen recommends using an authorised Volkswagen repairer.

Changes in the response of the rain and light sensor

Possible causes for faults and misinterpretations relating to the sensitive surface of the rain and light sensor *(→ Front view)* include:

— **Damaged wiper blades:** a film of water or smears caused by damaged wiper blades can increase the time the wipers are switched on, can shorten the length of the intervals between wipes or cause the wipers to run quickly and continuously.

— **Insects:** insects hitting the windscreen surface can cause the wipers to be activated.

— **Salt deposits:** in winter, salt deposits can cause the wipers to continue to wipe the windscreen when it is almost dry.

— **Soiling:** dry dust, wax, windscreen coatings (lotus effect), or detergent deposits (from a car wash) can cause the rain and light sensor to become less sensitive and react too slowly, or prevent it from reacting at all. Clean the sensitive surface of the rain and light sensor at regular intervals and inspect the wiper blades for damage *(→ Vehicle care, exterior)*.

— **Crack in the windscreen:** a wipe cycle will be triggered if the rain and light sensor is switched on when the windscreen is impacted by a stone. The rain and light sensor will then register the reduction in sensitivity of the surfaces and adjust accordingly. The size of the crack can affect the way in which the rain and light sensor activates the wipers.

The wipers will try to wipe away any obstacles that are on the window. The wipers will stop moving if the obstacle blocks their path.

1. Remove the obstacle and switch the wipers back on again.

General safety notes

The driver can use the exterior mirrors and interior mirror to observe the traffic behind and adjust the driving style accordingly.

For safety reasons, it is important that the driver positions the exterior and interior mirrors correctly before starting a journey.

Looking in the exterior mirrors and the interior mirror does not allow the driver to see the entire area around the side and rear of the vehicle. The area that cannot be seen is known as the blind spot. There may be objects and other road users in the blind spot.

WARNING

Adjusting the exterior and interior mirrors while driving may cause the driver to become distracted. This can cause accidents and serious or fatal injuries.

- Adjust the exterior mirrors and interior mirror only when the vehicle is stationary.
- Always ensure that the mirrors are positioned correctly and that the rear view is not restricted by ice, snow, condensation or any other objects.

WARNING

The fields of view of the exterior mirrors and interior mirror do not cover the entire area around the vehicle at the sides and rear. There may be objects and other road users in these blind spots. This can cause accidents and serious or fatal injuries.

- When parking, changing lane, overtaking or turning, always pay careful attention to the area around the vehicle.

WARNING

Curved mirrors (depending on country: convex or aspheric) enlarge the field of vision and can make objects in the mirror seem smaller and further away than they actually are. This leads to an inaccurate estimation of the distance from vehicles following behind, e.g. when changing lanes. This can cause accidents and serious or fatal injuries.

- Whenever possible, use the interior mirror to check the exact distance between your vehicle and following traffic or other objects.
- Ensure that you have a good view to the rear of the vehicle.

WARNING

Automatic anti-dazzle mirrors contain an electrolyte fluid which could leak if the mirror is broken. Contact with this fluid can cause irritation to the skin, eyes and respiratory organs, especially in people who suffer from asthma or similar illnesses. This can cause serious injuries.

- If you have swallowed electrolyte fluid, rinse your mouth immediately with plenty of water for at least 15 minutes. Do not induce vomiting unless instructed to do so by a doctor. Seek medical assistance immediately.
- Immediately make sure that there is a sufficient supply of fresh air and get out of the vehicle or, if this is not possible, open all windows and doors.
- If your eyes or skin come into contact with the electrolyte fluid, wash the affected location immediately with plenty of water for at least 15 minutes and consult a doctor.
- If your shoes or clothing come into contact with the electrolyte fluid, wash them immediately with plenty of water for at least 15 minutes. Clean shoes and clothes thoroughly before wearing them again.

NOTICE

If the glass of an automatic anti-dazzle mirror is broken, electrolyte fluid can leak from the mirror. This fluid attacks plastic surfaces.

- Remove any fluid that has leaked out as soon as possible, e.g. with a wet sponge.

Interior mirror

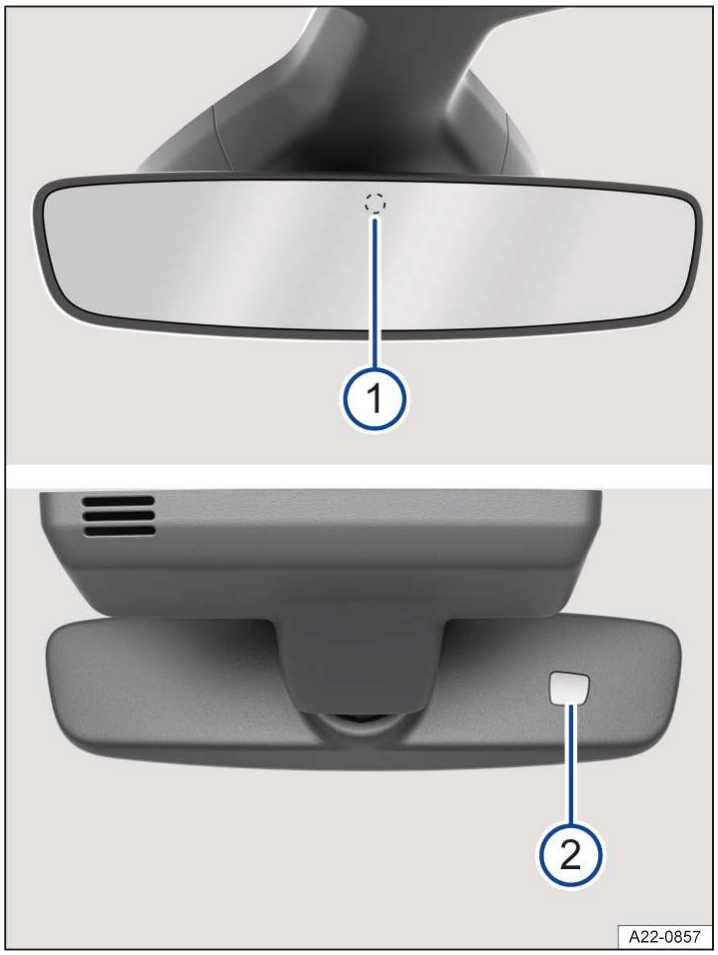

Fig. 1 On the windscreen: automatic anti-dazzle interior mirror.

1 Sensor for light incidence from the rear.

2 Sensor for light incidence from the front.

Fig. 2 On the windscreen: manual anti-dazzle interior mirror.

Automatic anti-dazzle interior mirror

When the ignition is turned on, the sensors measure the incident light from the rear → *Fig. 1* (1) and from the front (2).

Depending on the values measured, the interior mirror dims automatically.

If the incident light on the sensors is hindered or interrupted, e.g. by a sun blind or other hanging objects, the automatic anti-dazzle interior mirror will not function or will not function correctly. Mobile navigation devices attached to the windscreen or near the interior automatic anti-dazzle interior mirror can also influence the sensors → ⚠.

The automatic anti-dazzle function will be deactivated in some situations, e.g. when the interior lighting in the roof console is switched on or when reverse gear is engaged.

Manual anti-dazzle interior mirror

— Basic position: the lever on the lower part of the mirror is pointing forwards towards the windscreen.

— Pull the lever back to select the anti-dazzle function → *Fig. 2*.

⚠ WARNING

The illuminated display of a mobile navigation system can interfere with operation of the automatic anti-dazzle interior mirror. As a result, the interior mirror cannot be used to check the exact distance between your vehicle and following traffic or other objects. This can result in accidents and serious or fatal injuries.

- Switch off the mobile navigation system in such cases.

Exterior mirrors

Fig. 1 In the driver door: rotary knob for the exterior mirrors.

The exterior mirror functions for left-hand drive vehicles are described below. Position **L** corresponds to the exterior mirror on the driver side and position **R** to the exterior mirror on the front passenger side. These instructions are mirrored for right-hand drive vehicles.

Adjusting the exterior mirrors

1. Switch on the ignition.
2. Turn the rotary knob in the driver door until the desired symbol lights up → *Fig. 1*.
3. To adjust the exterior mirror, press the rotary knob forward, back, right or left in the direction of the arrows.

The selected function is active as long as the corresponding symbol lights up.

Fold exterior mirrors into the body electrically →.

Switch on the exterior mirror heating. The exterior mirror heating heats only at ambient temperatures below around +20°C (around +68°F) and initially with the highest setting. Heating takes place dependent on the ambient temperature after around two minutes.

L

Adjust the left-hand exterior mirror.

R

Adjust the right-hand exterior mirror.

Activating the exterior mirror functions

The following exterior mirror functions must be activated once in the vehicle settings in the Infotainment system *(→ Vehicle settings menu)*.

Synchronous mirror adjustment

The synchronous mirror adjustment function simultaneously adjusts the right exterior mirror when the left exterior mirror is adjusted.

1. Turn the rotary knob to position **L**.
2. Adjust the left-hand exterior mirror. The right-hand exterior mirror will be adjusted at the same time (synchronous adjustment).
3. To correct the adjustment of the right exterior mirror if necessary, turn the rotary knob to position **R** and adjust the right exterior mirror.

Folding in the exterior mirrors while parking

The exterior mirrors can fold in or out automatically when the vehicle is locked or unlocked from the outside, depending on equipment. For this, the rotary knob must be in position , L or R.

The exterior mirrors remain folded in if the rotary knob for the electrically adjustable exterior mirrors is in the position .

Storing front passenger exterior mirror settings for reversing

1. Switch on the ignition.
2. Select reverse gear.
3. Adjust the exterior mirror on the front passenger side so that you have a good view of the kerb area, for example.
4. Put the gearbox into neutral.
5. Switch off the ignition. The set mirror position is saved.

Activating the front passenger exterior mirror setting for reversing

1. Turn the rotary knob for the exterior mirrors to the position for adjusting the front passenger exterior mirror.
2. With the ignition switched on, select reverse gear.

   The front passenger exterior mirror will now adjust itself to the stored position.

The front passenger exterior mirror will move out of the position saved for reversing when the vehicle is driven forwards faster than approximately 15 km/h (around 9 mph) or when the rotary knob is turned to another position.

WARNING

If the exterior mirrors are folded out or in without paying due attention, fingers can be trapped between the exterior mirror and the mirror base. This can cause serious injuries.

- Fold the exterior mirrors in or out only when there is no obstruction in the path of the mirror.

NOTICE

Exterior mirrors may be damaged if they are not folded in when driving through a car wash.

- Always fold in the exterior mirrors.

NOTICE

Folding in the electrically adjustable exterior mirrors mechanically can lead to increased wear or damage the electric drive.

- Do not fold electrically adjustable exterior mirrors in or out by hand.

The exterior mirror heating should be switched off when it is no longer needed. Energy is otherwise wasted.

In the event of a fault, the electric exterior mirrors can be adjusted by hand by pressing on the outer edge of the mirror.

Some settings can be stored in the personalised user accounts and therefore change when the user account changes.

Sun visors

Fig. 1 In the front headliner: sun visor.

(1) Light.

(A) Pull out of the holder.

(B) Slide the cover open.

Adjustment options for the driver and front passenger sun visors:

— Folded down over the windscreen.

— Pulled out of the bracket and swung over towards the door → *Fig. 1* (A).

Illuminated vanity mirror

There is a vanity mirror behind a cover on the inside of the sun visor. When you open the cover → *Fig. 1* (B), the lamp → *Fig. 1* (1) lights up.

WARNING

Driving with the sun visors folded down and the sun blinds pulled out can reduce your view of the road. This can cause accidents and serious or fatal injuries.

- Sun visors should always be folded away and sun blinds should always be retracted if they are not being used.

In certain circumstances, the lamp above the sun visor will go out automatically after a few minutes. This prevents the 12-volt vehicle battery from discharging.

Sun blind in the glass roof

Fig. 1 In the roof: function button for controlling the sun blind.

The electric sun blind works when the ignition is switched on and can be opened and closed via the function button in the headliner or in the vehicle settings in the Infotainment system *(→ Vehicle settings menu)*.

If your vehicle has the relevant equipment, you can use voice control to open and close the sun blind *(→ Vehicle settings menu)*.

Opening the sun blind

— One-touch function: Swipe forwards over the function button → *Fig. 1*. The one-tap function is interrupted by tapping the function button.

— Manual operation: Swipe forwards over the function button and hold until the desired position is reached.

Closing the sun blind

— One-touch function: Swipe backwards over the function button → *Fig. 1*. The one-tap function is interrupted by tapping the function button.

— Manual operation: swipe backwards over the function button and hold until the desired position is reached.

Roll-back function for the sun blind

The roll-back function can reduce the risk of injuries when closing the sun blind → ⚠. The sun blind will open again automatically if it is unable to close because it is stiff or obstructed.

1. Check to see why the sun blind has not closed.
2. Try to close the sun blind again.

   The sun blind will open again immediately if it is still unable to close because it is stiff or obstructed. After opening, the sun blind can be closed again within a short period of time without the roll-back function.
3. If the sun blind still cannot be closed, close it without the roll-back function.

Closing the sun blind without the roll-back function

1. If the sun blind still cannot be closed, swipe to the rear over the function button within 5 seconds and hold → *Fig. 1* until the sun blind is fully closed.

   The sun blind will now close without the roll-back function.
2. Please go to a suitably qualified workshop if the sun blind still cannot be closed. Volkswagen recommends using an authorised Volkswagen repairer.

If you let go of the function button during the closing procedure, the sun blind will open automatically.

Touch panel reacts differently than expected

Moisture, dirt and grease can impede the functioning of the touch panel.

1. Always keep the touch panel clean and dry.

⚠ WARNING

Closing the sun blind without the roll-back function can cause serious injuries.

- Always take care when closing the sun blind.
- Ensure that nobody obstructs the path of the sun blind, especially if the roll-back function is not active when it is closed.

Overview of the Climatronic

The Climatronic is an automatic air conditioning system that heats, cools and dehumidifies the air. Automatic mode enables the Climatronic to control the air temperature, air distribution and air volume automatically.

The air conditioning block is displayed continuously at the bottom edge of the screen in the Infotainment system. You can find the currently set temperature there, for example.

Some functions of the air conditioning system depend on the vehicle equipment level.

Using the air conditioning system efficiently

The air conditioning system will work most effectively if the vehicle interior is kept closed. If heat has built up in the vehicle interior, cooling can be accelerated by briefly airing the vehicle.

Display of active functions

Functions that are switched on are indicated by illuminated symbols on the sensor fields, as well as function buttons highlighted in colour on the Infotainment system.

Exchanging functions in the air conditioning block

You can exchange some functions in the air conditioning block in the Infotainment system.

1. Tap and hold the function in the air conditioning block.
2. Select the desired air conditioning system function from the displayed overview.

Operating the air conditioning system with voice commands

Depending on the vehicle equipment, some functions of the air conditioning system can be operated with the voice assistant .

WARNING

Iced-up, snow-covered or misted-up windows severely restrict visibility. This increases the risk of collisions and accidents, which can result in serious or fatal injuries.

- Keep all windows free of ice, snow and condensation.
- Adjust the heating, air conditioning and rear window heating to prevent condensation from forming on the windows *(→ Heating and air conditioning system)*.
- Only set off once all windows are clear.
- Use air recirculation mode for a short period only. Condensation could otherwise form very quickly on the windows, greatly reducing visibility.
- Switch off the air recirculation mode as soon as it is no longer required.

Some settings can be stored in the user accounts of the personalisation function and therefore change when the user account changes .

Air conditioning system menu in the Infotainment system

CLIMA Open the air conditioning menu via the air conditioning block in the Infotainment system.

Open the air conditioning menu via the app overview in the Infotainment system.

The air conditioning menu contains the functions for air distribution, for example *(→ Air distribution of the air conditioning system)*.

Some functions and menus depend on the vehicle equipment level.

Air conditioning system operating conditions

The air conditioning system operating conditions are highlighted in colour:

Cooling.

Heating.

Air conditioning settings submenu

Depending on equipment, you will find additional convenience features in the **Air conditioning settings** submenu.

— Switch on seat heating automatically at the start of the journey *(→ Seat heating)*.

— Switch on the steering wheel heating automatically at the start of the journey *(→ Steering wheel heating)*.

Switching the Climatronic on and off

In the air conditioning menu: top edge of the screen

Switch the air conditioning system on and off.

If the air conditioning system is switched off, **OFF** is displayed at the bottom edge of the screen in the Infotainment system.

Climatronic automatic mode

In the air conditioning menu or in the air conditioning block

AUTO The set air temperature is kept constant. The volume of air and air distribution are controlled automatically. Automatic mode switches off when the blower speed is adjusted manually.

Climatronic automatic mode is also switched on if you switch on a Smart Climate function *(→ Air distribution of the air conditioning system)*.

Selecting an air conditioning profile

You can adjust the blower speed in automatic mode by means of the air conditioning profiles.

1. Open the air conditioning menu in the Infotainment system.
2. Tap AUTO to switch on Climatronic automatic mode.
3. Tap AUTO again and select the desired air conditioning profile in the pop-up window.

Air Care

In the air conditioning menu

The enhanced air filter with activated carbon in the Air Care Climatronic can reduce the amount of pollutants and also allergens that enter the vehicle interior.

When Air Care is switched on, the air conditioning system's air recirculation mode is maximised to the extent of the risk of window fogging – depending on the interior humidity and outside temperature. The air recirculation mode is automatically regulated and features continuous adjustment in order to prevent fatigue of the vehicle occupants.

Temperature control

Adjust the temperature via touch sliders on the Infotainment system. The temperature settings are permanently displayed at the bottom of the screen in the Infotainment system.

In the air conditioning menu or in the air conditioning block

A/C The air is cooled and dehumidified in cooling mode.

A/C MAX Switch maximum cooling output on and off.

Air recirculation mode is automatically switched on and the Climatronic automatically directs air to the upper body.

SYNC Adopt temperature settings of driver side for all seats.

Air conditioning when seat is not occupied

The air conditioning is controlled in relation to the occupied seats in order to keep the energy consumption of the air conditioning system as efficient as possible. If a seat is not occupied, **Eco** may be displayed instead of the temperature on the Infotainment system.

If a person is seated while wearing a seatbelt and the vehicle's drive system is active, the vehicle detects the occupied seat.

In the Infotainment system: Stationary air conditioning menu

Open the **Stationary air conditioning** menu in the app overview in the Infotainment system *(→ Stationary air conditioning)*.

With the stationary air conditioning, the vehicle interior can be cooled, ventilated or heated when stationary.

Air distribution and blower speed

Vents

There are vents in the vehicle in the following locations:

— Driver side.

— Front passenger side.

— Front centre console.

— Rear centre console.

NOTICE

Foodstuffs, medicines and objects that are sensitive to heat or cold can be damaged or made unusable by the air flowing out of the vents.

- Never leave food, medicines or other temperature-sensitive objects in front of the vents.

Air distribution functions in the air conditioning menu

Adjust the blower speed.

Direct air onto the windscreen.

Direct air towards upper body.

Direct air into the footwell.

Air distribution with Smart Climate

Climatronic automatic mode is also switched on if a Smart Climate function is switched on. The Smart Climate functions remain switched on for a short time. Automatic mode remains switched on after this time elapses.

Clear the windscreen of ice and misting.

Direct warm air into the footwell.

Direct warm air onto the steering wheel.

Direct cold air into the footwell.

Direct fresh air from the outside into the vehicle interior.

Briefly increase the heating output.

Briefly increase the cooling system output.

Defrost function

On the touch panel next to the multifunction steering wheel

MAX The defrost function of Climatronic clears the windscreen of ice and condensation.

The air is dehumidified and the blower is set to a high speed.

Air recirculation mode

When air recirculation mode is switched on, no fresh air enters the vehicle interior → ⚠.

Switch air recirculation mode on and off in the air conditioning block at the bottom edge of the screen or in the air conditioning menu.

When does air recirculation mode switch off?

Air recirculation mode switches itself off automatically if one of the following conditions is met:

— The defrost function is switched on.

— A sensor detects that condensation might form on the vehicle's windows.

⚠ WARNING

A lacking fresh air supply can lead to restricted visibility due to misted-up windows and to fast driver fatigue due to the stale air. This can lead to collisions and accidents and cause serious or fatal injuries.

- Use air recirculation mode for a short period only.
- Switch off the air recirculation mode as soon as it is no longer required.

NOTICE

Tobacco smoke can leave a residue on the evaporator of the air conditioning system and the enhanced air filter with activated carbon, producing a lasting unpleasant odour.

- To prevent lasting unpleasant odours, do not smoke in the vehicle when air recirculation mode is switched on.

Overview of seat heating

When the vehicle's drive system is activated, the front seats can be electrically heated in three settings →⚠.

Heating levels of the seat heating

The seat heating operating conditions are shown in red in the Infotainment system.

Seat heating switched off.

Seat heating switched on at highest temperature setting.

When should the seat heating be switched off?

Switch off the seat heating if one of the following conditions applies:

— A person with reduced sensitivity to pain or temperature is sitting on the seat →⚠.

— The seat is not occupied.

— A child seat is installed on the seat.

— Objects are covering the seat cushion, e.g. protective covers, jackets, blankets or bags.

— The seat cushion is damp or wet.

— The temperature in the vehicle interior or the outside temperature is above +25°C (+77 °F).

⚠ WARNING

Magnetic fields are produced during operation of the seat heating. In isolated cases, these magnetic fields can affect active medical implants, e.g. pacemakers.

- If you have a medical implant, you should consult your doctor or the implant manufacturer before operating the seat heating.
- Also make the other vehicle occupants aware of this.

⚠ WARNING

Anyone with reduced sensitivity to pain or temperature due to medication, paralysis or chronic illness (e.g. diabetes) could sustain burns on the back, buttocks and legs when using the seat heating. These burns may take a long time to heal or may never heal fully.

- Never use the seat heating if you have reduced sensitivity to pain or temperature and leave the "Automatic seat heating at the start of a journey" function switched off *(→ Seat climate control)*.
- Consult a doctor if you have questions about your own state of health.

⚠ WARNING

Wet seat covers can cause a malfunctions in the seat heating and increase the risk of burns.

- Ensure that the seat cushion is dry before using the seat heating.
- Do not sit on the seat in wet clothing.
- Do not place any wet objects or items of clothing on the seat.
- Do not spill any liquids on the seat.

NOTICE

The heater elements of the seat heating can be damaged by point loads and insulating materials.

- Do not kneel on the seats and do not apply any other point loads to the seat cushion and backrest.
- Do not load the seat cushion and backrest with pointed objects.
- Switch off the seat heating if insulating materials are fitted on the seat, e.g. a protective cover or child seat.
- Use the seat heating only if the seat is equipped with the original seat covers.
- If odours develop, switch off the seat heating immediately and have it checked by a suitably qualified workshop. Volkswagen recommends using an authorised Volkswagen repairer.

Operating the seat heating

1. Tap at the bottom of the screen to switch on the seat heating with the highest temperature setting.
2. To adjust the temperature setting, tap repeatedly.
3. To switch off the seat heating, tap repeatedly until is displayed.

   Or: to switch the seat heating on or off, tap the touch sliders under the Infotainment system on the driver or front passenger side with two fingers.

To save energy, switch off the seat heating as soon as possible.

Seat heating switches on and off automatically.

The most recent temperature setting for the driver seat is switched on automatically if you activate the vehicle's drive system again within approximately 10 minutes. If the front passenger seat is occupied, the most recent temperature setting for the front passenger seat is also switched on automatically.

If the front passenger leaves the seat when the seat heating is switched on and the vehicle's drive system is activated, the seat heating of the front passenger seat will be switched off automatically. The display on the Infotainment system will change to after around 2 seconds. If the front passenger returns to the seat when the vehicle's drive system is still activated, the seat heating of the front passenger seat will be switched on again automatically.

Automatic seat heating at the start of a journey

1. Open the air conditioning menu in the Infotainment system.
2. Tap to open the **Air conditioning settings** submenu.
3. To select the temperature setting at the start of the journey, tap in the **Seat heating** menu item.

   After activating the vehicle's drive system, the selected temperature setting is automatically switched on depending on the outside temperature.

   Or: tap **Off** in the **Seat heating** menu option if you do not want the seat heating to switch on automatically at the start of the journey.

Steering wheel heating

Switch the steering wheel heating on and off in the air conditioning menu.

Switch the steering wheel heating on and off on the multifunction steering wheel.

Temperature settings of the steering wheel heating

The steering wheel heating operating states are shown in colour in the Infotainment system and on the instrument cluster display. The symbol is coloured red at the highest temperature setting.

Highest temperature setting of the steering wheel heating.

Operating the heated steering wheel

1. Open the air conditioning menu in the Infotainment system.
2. Tap to switch on the steering wheel heating at the highest temperature setting.

   Or: press on the multifunction steering wheel.
3. To adjust the temperature setting, tap repeatedly.
4. To switch off the steering wheel heating, tap repeatedly until the symbol is coloured white.

Steering wheel heating switches on automatically

The most recent temperature setting is switched on automatically if you activate the vehicle's drive system again within approximately 10 minutes.

Switching the steering wheel heating on automatically at the start of the journey

1. Open the air conditioning menu in the Infotainment system.
2. Tap to open the **Air conditioning settings** submenu.
3. Activate the **Steering wheel heating** checkbox.

   After activating the vehicle's drive system, the steering wheel heating is automatically switched on depending on the outside temperature and temperature of the steering wheel.

Switching on the steering wheel heating automatically with the Smart Climate function

Direct warm air onto the steering wheel.

When you switch on the Smart Climate function in the air conditioning menu, the steering wheel heating will be switched on automatically with the highest temperature setting. The steering wheel heating will remain switched on after the time elapses.

If the steering wheel heating is already switched on before you switch on the Smart Climate function , the already adjusted temperature setting of the steering wheel heating will remain selected.

Steering wheel heating switches off automatically

The steering wheel heating switches itself off automatically if one of the following conditions is met:

— The power consumption is too high.

— There is a fault in the steering wheel heating system.

Rear window heating

The rear window heating works when the ignition is switched on.

REAR Switch the rear window heating on and off on the touch panel on the left next to the multifunction steering wheel.

The rear window heating switches off automatically after around 10 minutes at the latest.

NOTICE

Stickers that are affixed over the heating conductors of the rear window heating on the inside of the rear window or objects that are in contact with the inside of the rear window can damage the rear window heating.

- Do not stick any stickers over the heating conductors of the rear window heating.
- Load the luggage compartment only up to a height where no objects are in contact with the rear window.

To save energy, switch off the rear window heating as soon as possible.

Introduction to the topic

With the stationary air conditioning, the vehicle interior can be cooled, ventilated or heated when stationary. In winter, operation of the system allows ice, condensation and a thin covering of snow to be cleared from the windscreen. The stationary air conditioning is supplied with power via the main socket or via the vehicle's high-voltage battery.

The stationary air conditioning system can be programmed and managed in the Infotainment system or via an app on your mobile telephone.

Information about the app, the requirements for use and availability, and about compatible end devices is available on the internet .

NOTICE

Foodstuffs, medicines and objects that are sensitive to heat or cold can be damaged or made unusable by the air flowing out of the vents.

- Never leave food, medicines or other temperature-sensitive objects in front of the vents.

The range of the vehicle will be reduced if you operate the stationary air conditioning without a connected charging cable. At extreme outside temperatures, the heating or cooling output of the stationary air conditioning may not be sufficient to achieve the set desired temperature.

Operating the stationary air conditioning system

The stationary air conditioning can be operated when the charging connector is not plugged in. When the charging connector is not inserted, the stationary air conditioning will be supplied with energy from the high-voltage battery.

The stationary air conditioning only functions with the charging connector unplugged if the high-voltage battery is sufficiently charged. The stationary air conditioning will not start if the charge level of the high-voltage battery on the digital instrument cluster is in the reserve range *(→ Charge level display and range)*.

Opening the Stationary air conditioning menu in the Infotainment system

Open the **Stationary air conditioning** menu in the Infotainment system

1. Open the app overview in the Infotainment system.
2. Tap **Stat. air con.** in the app overview.

Setting desired temperature

1. Open the **Stationary air conditioning** menu in the Infotainment system
2. Tap at the left edge of the screen.
3. Set the desired temperature by means of ⊖ and ⊕.

Immediate air conditioning of stationary vehicle

Immediate air conditioning in the air conditioning block of the Infotainment system.

1. Switch off the ignition.
2. Tap in the air conditioning block in the Infotainment system.

   Or: switch on stationary air conditioning via the app on the mobile telephone.

   The vehicle is air conditioned for around 30 minutes. The function will then switch off automatically.
3. To switch off stationary air conditioning manually, tap again in the air conditioning block.

   Or: tap in the air conditioning menu.

   Or: switch off stationary air conditioning via the app on the mobile telephone.

Alternatively, the vehicle can be air conditioned before a desired departure time *(→ Stationary air conditioning)*.

If you switch on immediate air conditioning when the ignition is switched on, the vehicle interior is air-conditioned to the temperature you have set in the air conditioning block in the Infotainment system.

The stationary air conditioning switches off automatically

The stationary air conditioning switches itself off automatically if one of the following conditions is met:

— After around 30 minutes if the vehicle is air conditioned with the ignition switched off.

— After around 15 minutes if the vehicle's drive system was not activated after a programmed departure time.

— If the charge level of the high-voltage battery is too low .

Operating noises can be heard if the stationary air conditioning is switched on.

Programming the stationary air conditioning system

The stationary air conditioning can be programmed for your planned departure time in the Infotainment system. You can program the desired temperature of the vehicle interior for a planned departure time.

On the basis of the desired temperature, the vehicle calculates the time at which the stationary air conditioning must be switched on in order to achieve the desired temperature at the departure time. The maximum running time of the stationary air conditioning before the departure time is around 30 minutes.

Air conditioning the vehicle before departure

1. Open the **Stationary air conditioning** menu.
2. Tap to open the timer menu.
3. Set the planned departure time.
4. Tap .
5. To switch on the timer, activate the checkbox.

   The earliest programmed departure time is shown in the exit menu in the Infotainment system and can be switched on or off there *(→ Exit menu)*.

When the vehicle is locked, the stationary air conditioning can switch on a maximum of five times in succession. This counter is reset as soon as you activate the vehicle's drive system.

Stationary air conditioning with convenience functions

If the vehicle is air conditioned before departure, it can also switch on the convenience features automatically depending on the outside temperature. The convenience features are switched on automatically no earlier than 10 minutes before the scheduled departure time.

The vehicle can switch on the following equipment-dependent convenience functions automatically before a scheduled departure time:

— seat heating.

— Steering wheel heating.

— Exterior mirror heating.

— Rear window heating.

If you want the vehicle to switch on the convenience functions automatically before a scheduled departure time, proceed as follows:

1. Open the **Stationary air conditioning** menu.
2. Tap .
3. Select the front seats whose convenience functions are to be switched on automatically before a scheduled departure time.

   Only the convenience functions of the selected front seats are switched on automatically before departure.
4. To switch on the rear window heating automatically before the departure time, for example, switch on the **Automatic windscreen heating** function.

Air conditioning the vehicle after charging the high-voltage battery

The vehicle can be air conditioned before a planned departure time if the vehicle's high-voltage battery is charged with alternating current (AC) or direct current (DC). You can adjust this setting in the charging settings in the Infotainment system *(→ Timer-controlled charging)*.

Air conditioning of vehicle after unlocking

1. Open the **Stationary air conditioning** menu in the Infotainment system
2. Tap ⚙.
3. Activate the **Start stationary air conditioning when vehicle is unlocked** checkbox.

   As soon as you open a vehicle door, the vehicle is air conditioned for 5 minutes.

Depending on the equipment, you can set door unlocking to **Single door** or **All doors** in the **Vehicle settings** menu on the Infotainment system in vehicles with the keyless locking and starting system Keyless Access *(→ Keyless Access)*. If door unlocking is set to **Single door**, the air conditioning only starts when you open the driver door. If door unlocking is set to **All doors**, the air conditioning starts when you open a vehicle door or the boot lid.

Checking programming

The next activated timer and the activated functions are shown in the Infotainment system when the ignition is switched off.

Troubleshooting

or CO_2 concentration in the vehicle interior air too high

The red warning lamp or the yellow indicator lamp lights up.

The message **Health risk! High CO2 concentration. Open windows!** or **Health risk! CO2 too high. Open all windows immediately!** may be displayed on the instrument cluster display.

1. Open all windows immediately.
2. Go to a suitably qualified workshop and have the air conditioning system checked. Volkswagen recommends using an authorised Volkswagen repairer.

Air conditioning system not working correctly or CO_2 concentration cannot be measured

The indicator lamp lights up yellow.

The message **Air conditioning system not working correctly. Visit workshop.** may be displayed in the instrument cluster display.

1. Go to a suitably qualified workshop and have the air conditioning system checked. Volkswagen recommends using an authorised Volkswagen repairer.

Cooling mode A/C or the heater cannot be switched on or operation is restricted

Cooling mode A/C begins to function as soon as the driver seat is occupied.

Operation of cooling mode A/C, the heater and the defrost function may be restricted if the high-voltage battery is very hot, in extreme outside temperatures and if the charge level of the high-voltage battery is too low.

— Switch on the blower.

— Charge the high-voltage battery sufficiently.

— Check the fuse of the air conditioning system .

— Replace enhanced air filter with activated carbon .

— If the fault persists, go to a suitably qualified workshop. Volkswagen recommends using an authorised Volkswagen repairer.

NOTICE

If the air conditioning system is not working and is nevertheless still operated, this can cause secondary damage.

- If the air conditioning system does not cool or heat the air, switch it off immediately.
- Have the air conditioning system checked by a suitably qualified workshop. Volkswagen recommends using an authorised Volkswagen repairer.

Condensation on the windows

Condensation may form on the windows if they are colder than the ambient temperature and the air is humid. Cold air can absorb less moisture than warm air, which is why condensation frequently forms on windows in cold weather.

1. In order to improve the heating and cooling output, keep the air intake in front of the windscreen free of ice, snow and leaves *(→ Vehicle care)*.
2. Keep the air slots in the rear area of the luggage compartment clear so that air can flow through the vehicle from the front to the rear.
3. Switch on the defrost function *(→ Defrost function)*.

The wrong unit of temperature has been set

You can change the unit of measurement for all temperature displays in the vehicle using the Infotainment system.

1. Open the app overview in the Infotainment system.
2. Open the **Settings** menu.
3. Select the **Units** menu option.

Water or water vapour under the vehicle

If the humidity and temperature outside the vehicle are high, condensation can drip off the evaporator in the cooling system and form a pool underneath the vehicle. This is normal and does not indicate a leak.

If the outside humidity is high and the ambient temperature is low, condensation may evaporate from the stationary air conditioning when it is running. If this is the case, steam may appear underneath the vehicle. This is not a sign that the vehicle is damaged.

The stationary air conditioning cannot be switched on

The high-voltage battery will be discharged if the stationary air conditioning runs several times for an extended period when the charging connector is not plugged in. The stationary air conditioning will not start if the charge level of the high-voltage battery is insufficient.

Operating noises when the stationary air conditioning is switched on

Operating noises when the stationary air conditioning is switched on are normal and not a sign of a malfunction.

Touch panels react differently than expected

Moisture, dirt and grease can impede the functioning of the touch panels.

1. Always keep touch panels clean and dry.

Functions of the electric drive

Power output of the electric drive

The maximum torque of the electric drive is available as soon as you depress the accelerator.

Brake energy recuperation

When the vehicle is braked and when the vehicle is coasting to a stop under certain conditions during vehicle operation, electrical energy is generated by the electric drive. Part of this energy is returned to the high-voltage battery *(→ Brake energy recuperation)*.

Crawling function

The crawling function is used to drive slowly forwards or backwards without pressing the accelerator *(→ Driving mode selection for electric vehicles)*.

WARNING

An electric vehicle generates only very low levels of noise when stationary, driving or during operation. Other road users, e.g. pedestrians and children, may therefore not hear the vehicle or hear it only with difficulty when driving in traffic-calmed zones or when manoeuvring or reversing. This can result in serious injury and accidents.

- Always remember that other road users may not hear the vehicle noise.

Information on steering

The steering should be locked every time you leave the vehicle to make it more difficult for the vehicle to be stolen.

Steering

The electromechanical power steering automatically adjusts itself to the vehicle speed, steering torque and steering angle of the wheels. The electromechanical power steering works only when the vehicle's drive system is activated.

You will need considerably more strength than normal to steer the vehicle if the power steering is reduced or has failed completely.

Electronic steering column lock

The steering column is locked electronically:

1. Stop the vehicle.
2. Switch on the electronic parking brake.
3. Leave the vehicle.

Counter steering assistance

Counter steering assistance provides the driver with steering assistance in some critical driving situations. In combination with the ESC, additional steering power helps the driver when counter steering →⚠.

Progressive steering

The progressive steering can adjust the force of the steering movement in a driving situation. The progressive steering functions only when the vehicle's drive system is activated.

In urban traffic, less steering input is required when parking, manoeuvring or turning sharply.

When driving on country roads or on the motorway, the progressive steering provides a more sporty, direct steering response and a dynamic feel when cornering, for example.

⚠ WARNING

The power steering only works when the vehicle's drive system is activated. If the power steering is not working, the ability to steer is greatly reduced due to the stiff steering wheel. This can lead to a loss of control over the vehicle, accidents and serious or fatal injuries.

- Never allow the vehicle to roll when the vehicle's drive system is deactivated.

⚠ WARNING

The counter steering assistance is not a substitute for the full attention of the driver and operates only within the limits of the system. Uncontrolled vehicle movements can occur in critical driving situations in spite of the counter steering assistance. If you do not pay due attention, there is a risk of accidents and serious or even fatal injuries.

- Always pay due attention and do not rely exclusively on the system. The driver is always responsible for all driving tasks.
- Please note that the vehicle is not steered by the counter steering assistance.
- Ensure that your speed and driving style are always appropriate for the current visibility, weather and road/traffic conditions.

Troubleshooting

Steering fault

The warning lamp lights up or flashes red.

There is a fault in the electromechanical power steering or electronic steering column lock.

Do not drive on!

1. Seek expert assistance.

— If the warning lamp lights up red, the steering may be stiff because the electromechanical power steering has failed.

— The vehicle should not be towed away on its own four wheels.

Steering fault

The indicator lamp lights up or flashes yellow.

The steering is harder or more sensitive than usual.

The indicator lamp lights up continuously:

1. Activate the vehicle's drive system again and drive a short distance slowly.
2. If the warning lamp stays lit, the system should be checked by a suitably qualified workshop. Volkswagen recommends using an authorised Volkswagen repairer.

The indicator lamp flashes:

1. Turn the steering wheel back and forth.
2. Switch the ignition off and then on again.
3. Observe messages on the digital instrument cluster display.
4. Do not continue your journey if the indicator lamp still flashes after the ignition is switched on. Seek expert assistance.

Information on the pedals

Fig. 1 In the footwell: pedals.

1 Accelerator.

2 Brake pedal

WARNING

Objects in the driver footwell can hinder pedal operation. This can lead to loss of control of the vehicle and increase the risk of serious or fatal injuries.

- Make sure that all pedals can always be operated without any hindrance.
- Use only floor mats that are suitable for your vehicle.
- The floor mats must always be properly secured in the footwell.
- No additional floor mats or other floor coverings should be placed over the fitted floor mat.
- Make sure that no objects can enter the driver footwell while the vehicle is in motion.
- If there are any objects in the footwell, remove them when the vehicle is parked.
- Always wear shoes that provide good grip for your feet when using the pedals.

WARNING

In order to bring the vehicle to a standstill, a longer brake pedal travel is required in the event of failure of a brake circuit. A longer braking distance can result in accidents and serious or fatal injuries.

- Continue pressing the brake pedal and press the pedal with more force than usual if the braking power is reduced.

Information on the brakes

Running in brake pads

New brake pads cannot generate the full braking effect during the first around 200 km to 300 km (around 100 mi to 200 mi) and must first be bedded in → ⚠. However, you can compensate for the slightly reduced braking force by applying more pressure to the brake pedal. During the run-in period, the braking distance is longer when the brakes are depressed fully or during emergency braking than with brake pads that have been fully run in. In the run-in period, the brakes should not be depressed fully and situations should be avoided that create a heavy load on the brakes, e.g. when driving up close to the vehicle ahead.

Brake pad wear

The wear of the brake pads depends to a great extent on the conditions under which the vehicle is operated and the way in which the vehicle is driven. If the vehicle is used for regular urban trips or short journeys and is driven with a sporty driving style, the brake pads must be regularly checked by a suitably qualified workshop. Volkswagen recommends using an authorised Volkswagen repairer.

External influences on the brakes

When driving with wet brakes, for example after driving through water, after heavy rainfall or after washing the vehicle, the braking effect may be delayed as the brake discs will be wet, or possibly iced up (in winter). The brakes must be "dried" as quickly as possible by careful braking at higher speed. Please ensure that no other vehicles and no road users are put at risk as a result of this action → ⚠.

Any salt layer accumulating on the discs and pads will delay the braking effect and increase the braking distance. If the brakes on the vehicle have not been applied for a long time on roads that have been gritted with salt, the layer of salt must be reduced through careful braking → ⚠. Please ensure that no other vehicles and no road users are put at risk as a result of this action → ⚠.

Corrosion on the brake discs and dirt in the brake pads are facilitated through long periods of inactivity, low mileage and low load levels. If the brake pads have been hardly used or if they are corroded, Volkswagen recommends that the brake discs and brake pads be cleaned by braking strongly several times from high speed. Please ensure that no other vehicles and no road users are put at risk as a result of this action → ⚠.

Vehicles with brake energy recuperation

On vehicles with recuperation, the braking effect is realised primarily through brake energy recuperation using the electric drive and not by the hydraulic brake system. In order to remove corrosion and other residue from the brake discs, it is necessary to apply the brake pads. To achieve this, either the strength of braking must be higher than is possible by means of recuperation or the gear selector position **N** must be engaged so that brake energy recuperation is not used for braking. Please ensure that no other vehicles and no road users are put at risk as a result of the braking operation → ⚠.

⚠ WARNING

Driving with worn brake pads or a faulty brake system can lead to loss of control of the vehicle, accidents and serious or fatal injuries.

- If you have reason to believe that the brake pads are worn or the brake system is faulty, go to a suitably qualified workshop immediately and have the brake system checked and have any worn brake pads replaced. Volkswagen recommends using an authorised Volkswagen repairer.

⚠ WARNING

New brake pads cannot generate the full braking effect during around the first 300 km (around 200 miles) and must first be run in. An insufficient braking effect can increase the risk of accidents. This can cause severe or fatal injuries.

- Increase the pressure on the brake pedal if you notice that the braking effect is reduced.
- Drive with particular care with new brake pads to reduce the risk of accidents, serious injuries and loss of control of the vehicle.
- Never drive too close to other vehicles when running in new brake pads, and never create a driving situation that will place a heavy load on the brakes.

⚠ WARNING

Constant braking will cause the brakes to overheat. This can significantly reduce the braking performance, increase the braking distance and, in certain circumstances, cause the brake system to fail completely. This can cause you to lose control of the vehicle and can lead to accidents and serious or fatal injuries.

- Never "ride" the brake pedal or depress the brake pedal too often and for too long.

WARNING

When driving downhill, the brakes are placed under particular strain and become hot very quickly. Overheated brakes reduce the braking effect and considerably increase the braking distance. This can cause you to lose control of the vehicle and can lead to accidents and serious or fatal injuries.

- Reduce your speed before driving down a long, steep gradient and select a higher energy recovery level. This will make use of the electric drive braking effect and relieve the load on the brakes.
- Before starting your journey, make sure that the air supply to the brakes is not covered, e.g. by non-standard or damaged front spoilers.

WARNING

Wet brakes or brakes coated with ice or road salt react more slowly and require longer braking distances. This can cause you to lose control of the vehicle and can lead to accidents and serious or fatal injuries.

- Carefully test the brakes.
- If the visibility, weather, road and traffic conditions permit, apply the brakes gently a few times to dry the brakes and remove ice and salt.

WARNING

If the vehicle is driven at a high speed, the driver may have to exert more force to achieve sufficient braking efficiency. Inadequate braking efficiency can increase the risk of accidents and lead to serious or fatal injuries.

- Never exceed the maximum permitted speed.
- Always observe the current traffic regulations and speed limits and think ahead when driving.

Regularly perform a visual check of the thickness of the brake pads through the openings in the wheel rims or from the underside of the vehicle. If necessary, remove the wheels to carry out a comprehensive check. Volkswagen recommends using an authorised Volkswagen repairer.

When the front brake pads are checked, the brake pads in the drum brakes on the rear axle should also be checked at the same time. This check is performed though an inspection hole on the rear of the drum. A sealing plug must be removed for this purpose. Volkswagen recommends using an authorised Volkswagen repairer.

In order to avoid premature wear of the brakes due to external influences, the brakes should be checked for corrosion at regular intervals and any residues removed by using the hydraulic brake system.

Troubleshooting

Brake system fault

The warning lamp lights up red. A text message may also be shown on the instrument cluster display.

Do not drive on!

1. Seek expert assistance immediately.

Brake pad wear indicator

The indicator lamp lights up yellow. The brake pads are worn.

1. In this case, go to a suitably qualified workshop immediately and have the system checked. Volkswagen recommends using an authorised Volkswagen repairer.
2. All brake pads should be checked and renewed as necessary.

and Brakes too hot

The indicator lamp lights up yellow.

An acoustic signal may also be given. A text notification may also be shown on the instrument cluster display.

1. Stop at the next opportunity.
2. Keep the vehicle stopped with the electronic parking brake switched on and ignition switched on until a further text message appears.
3. Then go to a suitably qualified workshop and have the system checked. Volkswagen recommends using an authorised Volkswagen repairer.

Unusual noises when braking

If you hear scratching or squeaking noises each time you brake, this is an indication that your brake pads on the front and rear axle are worn.

1. In this case, go to a suitably qualified workshop immediately and have the system checked. Volkswagen recommends using an authorised Volkswagen repairer.
2. All brake pads should be checked and renewed as necessary.

If the braking performance of the vehicle changes

If the brake pads are worn or if you establish that the vehicle is no longer braking in the usual way, for example, in the event of a sudden lengthening of the stopping distance:

1. In this case, go to a suitably qualified workshop immediately and have the system checked. Volkswagen recommends using an authorised Volkswagen repairer.
2. All brake pads should be checked and renewed as necessary.

Electronic immobiliser

The immobiliser helps to prevent the vehicle's drive system from being activated and driven with an unauthorised vehicle key.

Vehicles with starter button

The vehicle key contains a chip that automatically deactivates the immobiliser when a valid vehicle key is located in the vehicle interior.

The electronic immobiliser is automatically activated as soon as the ignition is switched off *(→ Starter button)*.

The vehicle's drive system can be activated only when a Volkswagen Genuine vehicle key with the correct code is used. Coded vehicle keys are available from an authorised Volkswagen repairer.

Switching the ignition on and off

Some vehicle functions are already activated when the driver approaches the vehicle with the vehicle key.

Switching on the ignition

Fig. 1 On the right of the steering column: starter button.

1. Press the starter button once → *Fig. 1*.

   Or: depress the brake pedal.

The ignition can be switched on and the vehicle's drive system activated only if there is a valid vehicle key in the vehicle.

Switching off the ignition

1. Press the starter button once when the ignition is active and the vehicle is stationary.

   Or: leave the vehicle when the vehicle is stationary and the electronic parking brake is switched on.

The ignition will also be switched off if the brake is not pressed when the vehicle is stopped and the driver opens the belt buckle of the driver seat when the electronic parking brake is switched on.

Switching off the ignition automatically

If the ignition is switched on and the driver moves away from the vehicle carrying the vehicle key, the ignition switches off automatically after a short time .

If no valid vehicle key is detected in the vehicle interior after the ignition is switched off, it is no longer possible to activate the vehicle's drive system without a valid vehicle key. A message is shown on the digital instrument cluster display.

If the bonnet is opened when the ignition is switched on, the ignition will not be switched off automatically.

WARNING

If the brake pedal is pressed when the ignition is switched on, the vehicle's drive system will be activated immediately. This can lead to unintentional vehicle movements and cause serious injuries.

- Avoid pressing the brake pedal when switching on the ignition if you do not want to activate the vehicle's drive system.

WARNING

If the vehicle key is left unattended in the vehicle, children or unauthorised persons could lock the doors and the boot lid, activate the vehicle's drive system or switch on the ignition and thus operate electrical equipment, e.g. electric windows. This can result in accidents and serious or even fatal injuries.

- Take all vehicle keys with you every time you leave the vehicle.

WARNING

If children, people requiring assistance or animals are left unattended in the vehicle, they could accidentally set the vehicle in motion or be exposed to very high or low temperatures. There is a risk of accidents and serious or fatal injuries.

- Never leave children, people requiring assistance or animals unattended in the vehicle.

Activating the vehicle's drive system

Prerequisites for activating the vehicle's drive system

The vehicle's drive system can be activated when the following conditions are fulfilled:

✓ The high-voltage battery is sufficiently charged.

✓ There is no charging cable connected.

✓ The temperature of the high-voltage battery is within the operating range.

✓ There is a valid vehicle key in the vehicle.

Activating the vehicle's drive system

READY When the vehicle's drive system has been activated, the indicator lamp lights up green in the instrument cluster.

1. With the brake pedal depressed, select the position **D** or **R**.

   The **READY** indicator lamp lights up in the instrument cluster display and an acoustic signal sounds.

2. Repeat the procedure if the vehicle's drive system cannot be activated. If necessary, perform an emergency start.

⚠ WARNING

An electric vehicle generates only very low levels of noise when stationary, driving or during operation. Other road users, e.g. pedestrians and children, may therefore not hear the vehicle or hear it only with difficulty when driving in traffic-calmed zones or when manoeuvring or reversing. This can result in serious injury and accidents.

- Always remember that other road users may not hear the vehicle noise.

Electronic engine sound

The electronic engine sound is a sound that warns other road users about the approaching vehicle.

The electronic engine sound is switched on when the vehicle's drive system is activated.

When driving quickly, the electronic engine sound is gradually faded out.

WARNING

The volume and audibility of the electronic engine sound may be restricted by snow or heavy soiling in the area of the front grille. If the vehicle cannot be heard by other road users, this can lead to accidents and serious injuries.

- Before the start of every journey, check the area of the front grille for heavy soiling and clean it if necessary.
- You should always expect that the vehicle will not be heard by other road users.

Leaving the vehicle when the vehicle’s drive system is active

Vehicle’s drive system

If the vehicle is left after stopping with the vehicle’s drive system activated and a position selected, the ignition and drive will switch off automatically under certain conditions *(→ Starter button)*.

This protects the vehicle from unauthorised use.

The vehicle must be secured to prevent it from rolling away before leaving the vehicle .

If you subsequently want to continue driving, the ignition must be switched back on again, for example by pressing the brake pedal, and reactivating the vehicle’s drive system. Observe any messages that appear on the digital instrument cluster display.

⚠ WARNING

An unattended vehicle that is ready to drive can move unintentionally. This can lead to accidents and serious injuries.

- Never leave the vehicle unattended when the vehicle’s drive system is active.
- Always switch on the electronic parking brake when you park or leave the vehicle.
- When leaving the vehicle always ensure that all doors, windows, the boot lid and bonnet are completely closed and locked.

Troubleshooting

No valid vehicle key recognised

Fig. 1 In the centre console: emergency start function.

A display will appear in the digital instrument cluster display.

If the button cell in the vehicle key is weak or discharged, it is possible that the vehicle key will not be recognised.

In this case it is necessary to perform an emergency start:

1. Place the vehicle key in the drink holder or stowage compartment in the centre console → *Fig. 1* (arrow).
2. Depress the brake pedal or press the starter button. The ignition is switched on.

The vehicle's drive system cannot be activated

A notification will be shown in the digital instrument cluster display if an unauthorised vehicle key is used or there is a system fault.

1. Use an authorised vehicle key.
2. If the fault persists, seek expert assistance.

Deactivating the vehicle's drive system

The actions should only be carried out in the specified order:

1. Bring the vehicle to a stop.
2. Park the vehicle.
3. Switch on the electronic parking brake.
4. Observe messages on the digital instrument cluster display.

WARNING

An unattended vehicle that is ready to drive can move unintentionally. This can lead to accidents and serious injuries.

- Never leave the vehicle unattended when the vehicle's drive system is active.
- Before leaving the vehicle, always ensure that the electronic parking brake is switched on.
- When leaving the vehicle always ensure that all doors, windows, the boot lid and bonnet are completely closed and locked.

WARNING

When the vehicle's drive system is deactivated, certain vehicle systems do not function or function only to a restricted extent, e.g. brake servo or power steering. As a result, more force has to be used for steering and more pressure has to be applied to the brake pedal to stop the vehicle. If the vehicle is in motion, this can cause loss of control over the vehicle, accidents and serious or fatal injuries.

- Never deactivate the electric drive while the vehicle is in motion.

WARNING

The airbags and belt tensioners do not function when the vehicle's drive system is deactivated. This can result in accidents and serious or fatal injuries.

- Never deactivate the electric drive while the vehicle is in motion.

WARNING

When the ignition is switched off, the steering column lock may activate and you will no longer be able to steer the vehicle. If the vehicle is in motion, this can cause loss of control over the vehicle, accidents and serious or fatal injuries.

- Never switch off the ignition while the vehicle is in motion.

Troubleshooting

The vehicle’s drive system cannot be deactivated

The vehicle’s drive system cannot be deactivated.

In this case it is necessary to perform an emergency switch-off procedure:

1. Bring the vehicle to a stop.
2. Press the starter button twice within a few seconds or press and hold once.

   The vehicle’s drive system is deactivated and the ignition is switched off.

Driving mode selector

The selected position is shown in the digital instrument cluster display and, depending on equipment, on the driving mode selector when the ignition is switched on.

Selecting a position

Fig. 1 On the right of the steering column: driving mode selector.

To change from neutral position **N** to a gear position, carry out the following:

1. Depress the brake pedal.
2. Turn the driving mode selector in the desired direction → *Fig. 1*.

Switching high brake energy recuperation B on and off

Carry out the following actions to activate high brake energy recuperation **B**:

1. Turn the driving mode selector forward once from the **D/B** position → *Fig. 1*.

   The driving mode selector always moves back to its original position when released.
2. Turn the driving mode selector in forward direction again to change to the **D** position.

Description of positions

D Continuous position for forward driving – the electric drive is in normal mode.

Brake energy recuperation takes place automatically if Eco Assistance is activated *(→ Eco assistance)*.

B High brake energy recuperation in overrun *(→ Brake energy recuperation)*.

N The electric drive is in the neutral position. No force is transmitted to the wheels and the braking effect of the electric drive is not available.

R Reverse gear is selected. Select only when the vehicle is stationary.

If you want to drive on an uphill gradient in reverse gear, reverse gear may not be available depending on the steepness of the uphill gradient and the load level. This protects important drive components. Observe the message in the instrument cluster. If possible, park the vehicle so that you can drive off forwards.

(P) The rear wheels are locked mechanically. Switch on only when the vehicle is stationary .

Crawling function

If a gear has been selected and the brake pedal is released, the vehicle will start moving at a low speed. This allows the vehicle to move off more slowly and precisely through controlled application of the brakes, for example when manoeuvring. The set driving speed depends on the gradient and vehicle load.

If the Auto Hold function is active, the crawling function is activated only when the accelerator is pressed.

Driving downhill

Brake energy recuperation should be used if possible when driving down hills *(→ Brake energy recuperation)*.

Stopping and pulling away on uphill gradients

If you wish to stop the vehicle or pull away when driving uphill you should use the Auto Hold function *(→ Auto Hold function)*.

When you stop the vehicle on an uphill gradient with a selected position, the vehicle must always be prevented from rolling by depressing the brake pedal or by applying the electronic parking brake. Release the brake pedal only when you pull away.

WARNING

Selecting the wrong position can cause you to lose control of the vehicle, which can lead to accidents and serious injuries.

- Never press the accelerator when engaging a gear selector position.

WARNING

Fast acceleration or switching off TCS can lead to a loss of traction and skidding on slippery roads (e.g. in wet or icy conditions) or on dirty road surfaces. This can cause you to lose control of the vehicle and lead to accidents and serious or fatal injuries.

- Accelerate quickly only if visibility, weather, road and traffic conditions permit, and other road users are not put at risk due to the acceleration and driving style.
- Always adapt your driving style to the traffic.

WARNING

If the vehicle is left unattended with the vehicle's drive system is active, it may lead to accidents and serious injuries.

- Never leave the vehicle unattended when the vehicle's drive system is active.
- Always switch off the ignition.
- When you park or leave the vehicle, always ensure that the electronic parking brake is switched on.
- When leaving the vehicle always ensure that all doors, windows, the boot lid and bonnet are completely closed and locked.
- Hold the vehicle by the foot brake if the vehicle's drive system is activated and the position **D/B** or **R** is engaged.
- Never select reverse gear when the vehicle is in motion.

NOTICE

Incorrect handling of the electric drive can result in increased wear or damage.

- Allow the vehicle to roll in **N** position only in exceptional cases *(→ Information on the brakes)*.
- If the vehicle is stopped on an uphill gradient with an engaged position, do not hold it by pressing the accelerator but press the brake pedal.

Troubleshooting

Electric drive overheated

The warning lamp lights up red.

The electric drive is overheated.

A text message is shown on the digital instrument cluster display.

Do not drive on!

1. Park the vehicle safely outdoors as soon as it is possible.
2. Deactivate the vehicle's drive system.

   Do not add coolant.
3. Seek expert assistance.

Fault in engine management system

The warning lamp lights up red.

A text message is displayed in the digital instrument cluster display and an acoustic warning sounds.

The accelerator function is impaired and the drive power reduced.

Do not drive on!

1. Stop the vehicle safely as soon as possible.
2. Seek expert assistance.

and No recuperation possible

The indicator lamps light up yellow.

Fault in brake energy recuperation.

The range can be limited.

1. In this case, go to a suitably qualified workshop and have the system checked. Volkswagen recommends using an authorised Volkswagen repairer.

NOTICE

The electric drive will be damaged if you allow the vehicle to roll for an extended period or at high speed with the ignition switched off, the electric drive switched off or discharged 12-volt vehicle battery.

- Please note that the vehicle can be towed only under certain conditions *(→ Towing)*.

Only manoeuvring is still possible

The indicator lamp lights up red.

A text message is displayed in the instrument cluster and an acoustic warning sounds.

The temperature or charge level of the high-voltage battery is too low and the drive power is reduced.

Convenience functions of the air conditioning are restricted.

If the indicator lamp appears while driving, the vehicle is about to break down in traffic:

1. If possible, drive the vehicle directly to the charging station.
2. If the vehicle cannot be driven to the charging station, park the vehicle in a safe place.
3. Seek expert assistance in order to charge the vehicle away from a charging station.

If the indicator lamp appears when the ignition is switched on, the vehicle can be driven for a short distance at a speed of around 7 km/h (around 4 mph):

1. Charge the high-voltage battery when the charge level is low.

The indicator lamp will go out when the power is increased again.

For journeys at low outside temperatures, Volkswagen recommends preconditioning the vehicle beforehand while stationary. The high-voltage battery is then heated and the available power is increased.

Manoeuvring the vehicle is no longer possible at extremely low outside temperatures and if the vehicle has been stationary for a long time. To ensure the vehicle's drive system can still be activated at extremely low outside temperatures, Volkswagen recommends parking the vehicle in a place where it is protected against such temperatures *(→ Tow-starting or towing)*.

Power restricted

The indicator lamp lights up yellow.

A text message is displayed in the instrument cluster and an acoustic warning sounds.

The power is significantly reduced and may decrease further.

Convenience functions of the air conditioning are restricted.

1. Charge the high-voltage battery when the charge level is low.

At very cold or hot outside temperatures, the high-voltage battery is heated or cooled respectively during driving. The vehicle power will increase again after some time.

Observe the behaviour of the power display in the instrument cluster.

The indicator lamp will go out when the power is increased again.

Starting a journey at very low outside temperatures

The high-voltage battery provides less power when starting a journey at very low outside temperatures. The driving performance may be greatly restricted for a short time.

— In extreme cold, park the vehicle with a sufficient charge level of the high-voltage battery. Avoid the reserve range if possible.

— Use the stationary air conditioning before starting a journey.

Electronic engine sound is not working

The indicator lamp lights up and an acoustic signal sounds.

A text message is shown on the digital instrument cluster display.

1. In this case, go to a suitably qualified workshop and have the system checked. Volkswagen recommends using an authorised Volkswagen repairer.

You can continue to drive.

Information on brake energy recuperation

Functional description

When braking the vehicle and when coasting to a stop under certain driving conditions, electrical energy is generated by the electric drive. Part of this energy is returned to the high-voltage battery.

The higher the charge level of the high-voltage battery, the lower the recuperation and thus the engine braking effect effected. No brake energy recuperation occurs and therefore no engine braking effect occurs when the high-voltage battery is completely charged.

Very low or high temperatures of the high-voltage battery can limit or prevent brake energy recuperation.

If the vehicle detects that the road conditions do not allow the wheels to reliably contact the road surface, recuperation and thus the engine braking effect will be reduce automatically.

Power display

The power display shows the availability of brake energy recuperation and the engine braking effect *(→ Power display)*.

Brake energy recuperation settings

Brake energy recuperation by the vehicle differs depending on the engaged position, selected driving profile and Eco Assistance settings:

— **Position D engaged and Eco Assistance deactivated:** the energy recovery level depends on the selected driving profile.

No recuperation takes place during vehicle operation in the **Eco** and **Comfort** driving profiles. Recuperation takes place during vehicle operation in the **Sport** driving profile and on vehicles with the **Traction** driving profile.

— **Position D engaged and Eco Assistance activated:** automatic recuperation. The energy recovery level is automatically selected by Eco Assistance during vehicle operation *(→ Eco assistance)*.

— **Position B engaged:** high recuperation.

The vehicle also performs brake energy recuperation when the brake pedal is pressed.

If there is a high level of brake energy recuperation, the brake lights on the vehicle can also light up.

Efficient driving style

In order to achieve the most efficient driving style possible, the vehicle should be driven in **D** position in the **Eco** driving profile and with activated Eco Assistance.

Driving downhill

When driving down hills, you should drive in gear selector position **B** if possible.

Never allow the vehicle to roll down mountains or hills in the neutral position **N**.

WARNING

High brake energy recuperation can cause loss of traction and skidding, particularly on slippery roads. This can cause you to lose control of the vehicle and lead to accidents and serious or fatal injuries.

- Activate continuous high brake energy recuperation only if permitted by visibility, weather, road and traffic conditions, and if other road users are not put at risk due to the deceleration behaviour of the vehicle and the driving style.

WARNING

The higher the charge level of the high-voltage battery, the lower the engine braking effect, to the point where no engine braking effect may be generated at all. This can change the vehicle handling, which may lead to accidents and serious or fatal injuries.

- Never fully charge the high-voltage battery at high altitudes, such as at the top of a pass, in order to permit use of a braking effect by means of recuperation when driving downhill.
- Reduce your speed before driving down a steep gradient.
- Slow the vehicle using the vehicle brake when driving down a steep gradient.
- Please note that the load on the vehicle brakes is higher if there is no engine braking effect.

Information on brake support systems

Brake support systems can stabilise the vehicle in critical driving or braking situations and help to increase driving safety. The driver is responsible for driving safety →⚠.

— Continue to brake with the necessary force when a brake support system is performing a control intervention.

— Steer the vehicle if necessary.

— The ESC, ABS and TCS can function properly only if all four wheels are fitted with the correct tyres →⚠.

— If the ABS fails, ESC, TCS and EDS will also cease to function.

The status of the brake functions is checked automatically when the ignition is switched on. The indicator lamps light up briefly and then go out again. If an indicator lamp remains lit up, there is a fault. Go to a suitably qualified workshop immediately. Volkswagen recommends using an authorised repairer.

⚠ WARNING

Brake support systems is not a substitute for the full attention of the driver and operate only within the limits of the respective system. Driving fast on icy, slippery or wet roads as well as driving too close to the vehicle in front can have an adverse effect on vehicle stability and lead you to lose control over the vehicle. If you do not pay due attention, there is a risk of accidents and serious or even fatal injuries.

- Always pay due attention and do not rely exclusively on the system. The driver is always responsible for all driving tasks.
- Ensure that your speed and driving style are always appropriate for the current visibility, weather and road/traffic conditions. Never take any safety risks.
- Always keep the footwell under the pedals clear so that the brake pedal can move freely.
- Always use suitable tyres because driving stability depends on the grip of the tyres.

⚠ WARNING

If components and systems that affect driving dynamics have not been properly maintained or are not operational, the effectiveness of ESC may be significantly reduced. This applies in particular to changes to the suspension and wheel and tyre combinations that have not been approved. This can result in accidents and serious or fatal injuries.

- Have vehicle conversions and modifications carried out only by a suitably qualified workshop. Volkswagen recommends using an authorised Volkswagen repairer.
- Always use suitable tyres because driving stability depends on the grip of the tyres.

Electronic Stability Control (ESC)

ESC control intervention to reduce the risk of skidding and improve driving stability →⚠. The indicator lamp flashes yellow.

Traction control system (TCS)

TCS control intervention to prevent the wheels from spinning. The indicator lamp flashes yellow.

TCS reduces the drive output if wheelspin occurs and adapts the output to suit the road surface conditions. The TCS makes it easier to pull away, accelerate and drive up hills →⚠.

Anti-lock brake system (ABS)

ABS prevents the wheels from locking during braking so that the vehicle can still be steered →⚠.

Brake Assist system

BAS can help to reduce the stopping distance. If the driver depresses the brake pedal quickly in an emergency braking situation, the BAS will increase the braking force →⚠.

Electronic differential lock (EDL and XDS)

EDS brakes a spinning wheel automatically and distributes the drive force to the other drive wheels.

XDS is an extension of the electronic differential lock and improves traction by braking interventions in order to keep the vehicle on its intended course.

Automatic Post-Collision Braking System

If the airbag control unit has detected a collision in an accident situation, the Automatic Post-Collision Braking System will initiate braking automatically.

Requirements for automatic braking:

✓ The driver does not press the accelerator.

Electronic brake pressure distribution system

The electronic brake pressure distribution regulates the braking force between the front axle and the rear axle outside of any ABS regulation. This avoids excessive braking of the rear axle and keeps the vehicle stable during braking.

Electromechanical brake servo

The electromechanical brake servo supports the driver's foot movement when the ignition is switched on, and boosts the pressure applied to the brake pedal by the driver → ⚠. In the event of a braking intervention by a driver assist system, such as when ACC is performing a control intervention or during emergency braking, the brake pedal may move independently.

The brake pressure boost will reduce gradually after you switch off the ignition. Messages are displayed on the digital instrument cluster display if the vehicle is still held by means of the brake pedal. The brake servo function is restricted in this case.

Secure the stationary vehicle against rolling away *(→ Parking)*.

⚠ WARNING

Driving without the brake servo or with restricted brake servo function can considerably increase the braking distance. This can lead to accidents with serious or fatal injuries.

- Never deactivate the electric drive or switch off the ignition as long as the vehicle is still moving.
- Press the brake pedal with more force if the brake servo is not working or if the vehicle is being towed.
- Always keep the footwell under the pedals clear so that the brake pedal can move freely.

Brake blending

The brake blending function regulates between the braking action of the electric drive motor during recuperation and mechanical braking by the driver.

Switching a brake support system off and on

Depending on equipment, the ESC brake control system can be switched to a Sport mode or switched off.

Driving situations

To prevent any safety risk, brake support systems should not be switched off under normal conditions → ⚠.

⚠ WARNING

With ESC Sport switched on or ESC switched off, there is a much greater chance of the vehicle swerving. Inexperienced drivers may find it difficult to control the vehicle when driving at high speeds. This can result in accidents and serious or fatal injuries.

- Switch on the ESC Sport only if you are driving on a closed road or track and have the necessary skills for sporty driving.
- Never take any safety risks.

Switching on and off

1. Open the vehicle settings in the Infotainment system *(→ Vehicle settings menu)*.
2. If available, open the **Brakes** menu.
3. Select the function in the **ESC system** drop-down list.

When the setting is no longer used, the brake support system should be switched back on fully → ⚠.

ESC Sport

This function supports a sporty driving style. The ESC intervenes later to stabilise the vehicle, for example when taking bends in the road at high speed → ⚠. ESC Sport also includes the TCS Sport function.

ESC Sport switched on. The indicator lamp lights up yellow.

Troubleshooting

Electromechanical brake servo failure

Do not drive on!

The warning lamp lights up red.

A text message may also be displayed.

1. Press the brake pedal more firmly as the braking distance will increase due to the lack of brake servo support.
2. Seek expert assistance.

Electromechanical brake servo fault

The indicator lamp lights up yellow.

A text message is displayed for a few seconds.

The brake pedal may pulsate when pressed.

1. Press the brake pedal more firmly as the braking distance will increase due to the reduced brake servo support.
2. Go to a suitably qualified workshop. Volkswagen recommends using an authorised Volkswagen repairer.

Anti-lock brake system failure or fault

The indicator lamp lights up yellow.

1. Go to a suitably qualified workshop. Volkswagen recommends using an authorised Volkswagen repairer.

The vehicle can be braked without ABS.

ESC fault

The indicator lamp lights up yellow. ESC has been switched off.

There is a fault or a malfunction.

1. Switch the ignition off and on.
2. Drive a short distance at a speed of approx. 15 km/h (around 9 mph) to approx. 20 km/h (around 12 mph).
3. If the indicator lamp remains lit, go to a suitably qualified workshop. Volkswagen recommends using an authorised Volkswagen repairer.

Noises of the brake support systems

The brake pedal may move or noises may occur while the brake support systems are performing a control intervention.

1. Continue to brake with the necessary force, and steer the vehicle if necessary.

WARNING

If the brake warning lamp lights up together with the indicator lamp, the control function of the ABS may have failed. This can cause the rear wheels to lock when you brake. This may cause you to lose control of the vehicle and can result in accidents with serious or fatal injuries.

- To have the brake system checked, drive at reduced speed to the nearest suitably qualified specialist workshop. Volkswagen recommends using an authorised Volkswagen repairer.
- Avoid sudden braking and driving manoeuvres.

WARNING

The ABS is not functioning correctly if the indicator lamp does not go out or comes on while the vehicle is in motion. The vehicle can be stopped using the normal brakes only. Any restriction of the ABS can cause accidents and may result in vehicle damage and serious or fatal injury.

- Go to a suitably qualified workshop. Volkswagen recommends using an authorised Volkswagen repairer.

Introduction to the topic

By selecting different driving profiles, the driver can adapt the characteristics of the vehicle systems to the current driving situation, the desired ride comfort and an economical driving style. The adaptable vehicle systems include the chassis, steering, drive and the air conditioning system.

Different driving profiles are available, depending on the vehicle equipment level. The effect on the vehicle systems in the individual driving profiles depends on the vehicle equipment level.

Vehicles with adaptive chassis control (DCC)

The adaptive chassis control (DCC) continuously adjusts the chassis damping to the current road surface and driving situation while the vehicle is in motion. The DCC takes the chassis tuning of the selected driving profile into consideration

Presentation mode

If the driving profile is changed or the slider is moved in the **Individual** driving profile when the vehicle is stationary with the ignition switched on, the adaptive chassis control will be activated for around 30 seconds. Within this time, the adaptive chassis control can be tested in the different settings.

1. Switch on the ignition.
2. Select driving profile.

   Or: move the slider in the **Individual** driving profile.
3. Move the vehicle at the luggage compartment load sill or roof side member →.

NOTICE

The vehicle can be damaged if pressure is exerted on the vehicle body in an inappropriate way, e.g. by pressing on the wing, bonnet or roof.

- Press only from above onto the luggage compartment load sill or from the side against the roof side member.

Some settings can be stored in the personalised user accounts and therefore change when the user account changes.

Selecting a driving profile

The driving profile can be selected when the ignition is switched on and when the vehicle is stationary or while driving.

If you have selected a driving profile while driving, the vehicle systems will be switched immediately to the new driving profile except for **Drive**.

1. To also activate the newly selected driving profile for the **Drive** system, briefly take your foot off the accelerator as soon as permitted by the traffic situation.

Selecting the driving profile via the Infotainment system

1. Tap the MODE function button on the Infotainment system.
2. Set preferred driving profile.

Adapting the Individual driving profile

The settings for various vehicle systems can be adjusted in the **Individual** driving profile:

1. Select the **Individual** driving profile.
2. Tap on the function button.
3. Adjust the vehicle systems.

Displaying information on the driving profile

Additional information on the driving profile can be displayed on the Infotainment system:

1. Tap i at the function button of the driving profile.

WARNING

Selecting a driving profile while the vehicle is in motion can distract you from the road. This can cause accidents and serious or fatal injuries.

- Drive with your full attention and with responsibility.

Characteristics of the driving profiles

The selected driving profile is shown on the instrument cluster display.

The **Eco** driving profile switches the vehicle into economical mode and helps you to drive the vehicle in an energy-efficient manner.

The **Comfort** driving profile corresponds to the basic setting of the vehicle systems and leads to a comfort-oriented vehicle setup. It is suitable for everyday use, for example.

The **Sport** driving profile gives you a sporty driving feeling.

You can use the **Individual** driving profile to tailor individual vehicle systems to suit your personal requirements.

Standard behaviour of the driving profiles and vehicle systems

The **Comfort** driving profile corresponds to the basic settings of the vehicle systems when the ignition is switched on.

Behaviour of the driving profiles when the ignition is switched off and on

The vehicle system settings are reset to the **Comfort** driving profile when the ignition is switched off and then back on again.

The desired driving profile can be activated again:

1. Select the desired driving profile again by means of the driving profile selection.

Troubleshooting

Fault in adaptive chassis control (DCC)

The indicator lamp lights up yellow.

The message **Fault: damper** may be displayed on the instrument cluster display.

1. In this case, go to a suitably qualified workshop and have the system checked. Volkswagen recommends using an authorised Volkswagen repairer.

The driving profiles or vehicle systems do not behave as expected.

1. Note the standard behaviour of the driving profiles and vehicle systems *(→ Driving profile selection)*.

General driving tips

Think ahead when driving

Repeated acceleration and braking will increase fuel consumption. Keeping a close eye on the traffic can help to avoid frequent acceleration and braking. Keeping your vehicle at a sufficient distance from the vehicle in front can help you to think ahead when driving.

Avoid strong acceleration

The rolling and air resistance increase at excessively high speeds. This in turn increases the force needed to move the vehicle. Never drive the vehicle at top speed.

Observe the correct tyre pressures

An inadequate tyre pressure does not just mean greater wear, but also increases the rolling resistance of the tyres and thus the fuel consumption. Use tyres with optimised rolling resistance.

Adjust the tyre pressure according to the vehicle load:

— Observe the information on the tyre pressure sticker *(→ Tyre pressure)*.

— Tyre Pressure Loss Indicator *(→ Tyre Pressure Loss Indicator)*.

⚠ WARNING

Lack of attention when driving in traffic can cause accidents and serious or fatal injuries.

- Always observe the current traffic regulations and speed limits and think ahead when driving.
- When travelling long distances, stop and take a break regularly – at least around every 2 hours.

⚠ WARNING

Alcohol, drugs, medication and narcotics can severely impair perception, reaction times and driving safety. This could cause you to lose control of the vehicle. This can cause accidents and serious or fatal injuries.

- Do not drive under the influence of alcohol, drugs, medicines and narcotics.

⚠ WARNING

Driving at high speed and without a sufficient safety distance can lead to accidents and serious or fatal injuries.

- Adapt your speed and distance from the vehicles ahead to suit visibility, weather, road and traffic conditions.

Driving economically

Adopting the right driving style can reduce consumption, damage to the environment, and wear and tear to the electric drive, brakes and tyres. The following section lists a few tips for easing the strain on the environment and your bank account.

Using brake energy recuperation

Brake energy recuperation allows the energy of the rolling vehicle to be used to charge the high-voltage battery *(→ Brake energy recuperation)*.

Have your vehicle serviced on a regular basis

Regular maintenance is an essential prerequisite for economical driving and increases the service life of the vehicle.

Do not drive with unnecessary loads in the vehicle

You can reduce energy consumption by clearing out the luggage compartment before setting off, for example by removing empty drink crates or unused child seats.

In order to keep the drag coefficient of the vehicle as low as possible, remove attachments and add-on parts such as ski, bicycle or roof carriers after use.

Save electrical energy

Convenience features such as the air conditioning system or window heating require energy from the high-voltage battery.

If you want to increase the range of the vehicle:

— Set a higher interior temperature in summer and a lower temperature in winter. Air the vehicle before starting your journey at high outside temperatures.

— If an external power supply is available, use the stationary air conditioning.

— Switch off all convenience features that are not needed.

Your authorised Volkswagen repairer will gladly provide you with further information on correct maintenance and replacement parts that are particularly energy-efficient, e.g. new tyres.

Driving a loaded vehicle

For good vehicle handling when driving a loaded vehicle, please observe the following:

— Stow all items of luggage securely .

— Accelerate particularly cautiously and carefully.

— Avoid sudden braking and driving manoeuvres.

— Brake earlier than in normal driving.

— If applicable, observe the information about driving with a bicycle carrier *(→ Provision for bicycle carrier)*.

WARNING

Shifting loads can severely impair the vehicle's stability and driving safety and lengthen the braking distance in the event of hard or emergency braking. This can cause accidents and serious or fatal injuries.

- Secure the load properly to prevent it from slipping.
- Use suitable lashing or securing straps when securing heavy objects.
- Securely engage the rear seat backrests and also the adjustable rear seats, if installed.

NOTICE

Leaking liquids can get into the plug connections of the orange high-voltage cables. This can lead to damage to the electrical system and the high-voltage battery.

- Do not carry large quantities of liquid in the vehicle interior.

Driving with an open boot lid

Driving with an open boot lid is particularly dangerous. All objects and the open tailgate must be secured properly.

Driving with an open boot lid increases the air resistance of the vehicle and thus also the energy consumption of the electric drive. This reduces the possible range of the vehicle considerably. Volkswagen recommends that you do not drive with the boot lid open.

WARNING

When driving with the boot lid unlocked or open, loose items can fall out of the vehicle and hit following road users. This can result in accidents and serious or even fatal injuries.

- Always drive with the boot lid closed.
- Stow all items securely in the luggage compartment.
- Always drive carefully and ensure that you think ahead.
- Avoid any abrupt or sudden driving and braking manoeuvres as this can cause the open boot lid to move unpredictably.
- If you have to drive with the boot lid open, always remove a luggage rack mounted on the boot lid together with its load.

WARNING

Items that protrude from the luggage compartment change the length of the vehicle and may endanger other road users. This can result in accidents and serious or even fatal injuries.

- Observe legal requirements.
- Mark any objects protruding from the luggage compartment to ensure that they are visible to other road users.
- Never use the boot lid to jam or fix objects in position.

NOTICE

The height and possibly also length of the vehicle are different when the boot lid is open. This can lead to damage to the vehicle if due care is not taken when driving.

- Pay attention to the changed exterior dimensions, e.g. when driving through underpasses.

Driving through water on roads

Please follow these rules to help prevent damage to your vehicle when driving through water, for example if the road is flooded:

— The water level must be no higher than the lower edge of the vehicle body → ⚠.

— Do not drive faster than walking speed.

— Never stop the vehicle, reverse or deactivate the vehicle's drive system while in water.

— Oncoming vehicles will create waves that could increase the water level for your vehicle to such an extent that it is not safe to drive through the water.

⚠ WARNING

After driving through water, mud, slush etc., the brakes may react slowly and the braking distance will be increased as the brake discs and pads will be wet, or possibly iced up in winter. This can cause you to lose control of the vehicle and lead to accidents and serious or fatal injuries.

- In order to brake the brakes dry and free of ice, perform careful braking manoeuvres.
- Do not endanger other road users when performing braking manoeuvres and do not ignore any legal requirements.
- Avoid abrupt and sudden braking manoeuvres directly after driving through water.

NOTICE

If you drive through water, parts of the vehicle, e.g. electronics, could sustain severe damage or corrode.

- Never drive through salt water.
- Immediately rinse all vehicle parts that have come into contact with salt water using fresh water.
- Protect electronic components from contact with water.

Using the vehicle in other countries and continents

Registration regulations

The vehicle has been manufactured specifically for a particular country and complies with the requirements and registration regulations that applied in that country at the time of vehicle production.

If you want to use the vehicle abroad temporarily or for a short period, the relevant information must be observed.

Safety standards and regulations

In some countries, special safety standards and regulations apply that the vehicle may not comply with. Volkswagen recommends that you visit your authorised Volkswagen repairer before travelling abroad to find out about any legal requirements at your destination.

Selling the vehicle abroad

If the vehicle is going to be sold in another country or used in another country for an extended period, the legal requirements applicable in that country must be observed.

In some cases, certain equipment will have to be fitted or removed and functions deactivated. The service scope and service types could also be affected. This is particularly important if the vehicle is driven in another climatic region for a long period of time.

Functioning of the Infotainment system

Because different frequency bands are used in different countries, the factory-fitted Infotainment system may not work in other countries.

Charging abroad

Due to different legal regulations, charging at mains sockets is permitted only with reduced charging current in other countries. The charging cable limits the charging current corresponding to the infrastructure used. The lower value is used for charging if the settings differ .

Due to different technical standards, charging at charging stations in another country is not possible or only using a suitable charging cable. Consult an authorised Volkswagen repairer for further information.

Volkswagen is not responsible for any vehicle damage caused by inadequate servicing work or lack of Genuine Parts.

Volkswagen cannot be held responsible if the vehicle does not comply with or only partly complies with the relevant legal requirements in other countries and continents.

Introduction to the topic

Depending on the vehicle equipment, the vehicle has driver assist systems that increase comfort and convenience when driving. Some of these driver assist systems use sensors or cameras for operation (also referred to as “sensors” below). These are visible to you in some cases and in other cases not.

The sensors and cameras visually detect the vehicle surroundings using ultrasound or radar waves.

Installed sensors

Depending on the vehicle equipment, the following sensors may be installed:

— Radar sensor in the front of the vehicle.

— Radar sensors in the rear of the vehicle.

— Camera behind the windscreen.

— Ultrasound sensors in the front of the vehicle.

— Ultrasound sensors in the rear of the vehicle.

Information on the respective sensor locations is provided in the vehicle overviews .

WARNING

The driver assist systems is not a substitute for the full attention of the driver and operate only within the limits of the respective system. The driver assist systems cannot detect all driving situations and may not react or may warn or react with a delay or in an undesired way. If you do not pay due attention, there is a risk of accidents and serious or even fatal injuries.

- Always pay due attention and do not rely exclusively on the system. The driver is always responsible for all driving tasks.
- Observe the limits of the sensors and the system limits of the individual systems.
- Adapt your speed and the distance from the vehicles ahead to suit visibility, weather, road and traffic conditions.
- Be ready at all times to override or cancel automatic interventions.
- Observe the information on the instrument cluster display and respond according to the displays if permitted by the traffic situation.
- Do not use the driver assist systems if you suspect there is a problem or damage.

Limits of the sensors

Limits of the radar sensors

Driver assist systems that use radar sensors can react unexpectedly, with a delay or not at all in the following situations:

— Driving in poor weather conditions, e.g. heavy rain, snow or heavy spray.

— Driving through road works, tunnels or toll stations.

— Driving on winding roads, e.g. mountain roads.

— Over crests or through dips.

— Driving offroad.

— Driving in multi-storey car parks.

— Driving on roads with embedded metal objects, e.g. railway tracks.

— Driving on roads with loose chippings.

— In complex driving situations, e.g. traffic islands.

— After external force on components in the area of the radar sensors, e.g. after a rear-end collision.

— The radar sensors are covered, dirty, displaced or damaged.

Limits of the camera behind the windscreen

Driver assist systems that use the camera behind the windscreen can react unexpectedly, with a delay or not at all in the following situations:

— Over crests or through dips.

— Driving through road works.

— Driving offroad.

— Driving in poor weather conditions, e.g. heavy rain, snow, fog or heavy spray, and on poor roads.

— When the sun is low in the sky, in darkness or with glare from oncoming vehicles.

— The camera is temporarily unavailable due to prolonged exposure to direct sunlight or high ambient temperatures.

— The camera window is covered, dirty or damaged.

— The camera has been displaced.

Delayed response

If the sensor system is exposed to environmental conditions that impair sensor functioning, the driver assist systems may detect this only after a certain delay. For this reason, any restrictions to functions may be displayed only after a delay at the start of the journey and when driving .

Limits in certain driving situations

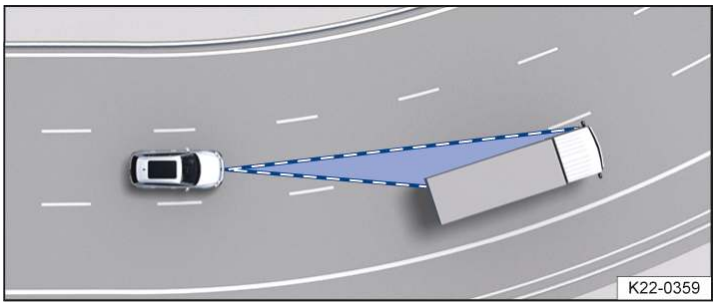

Fig. 1 Driving through bends.

The sensors always measure straight ahead. For this reason, vehicles may be incorrectly detected or vehicles driving ahead not detected in tight bends.

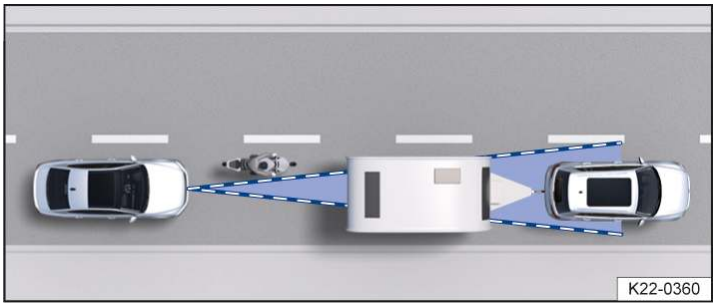

Fig. 2 Narrow vehicle.

Vehicles that are driving outside the sensor range in close proximity to your vehicle, e.g. motorbikes, cannot be detected.

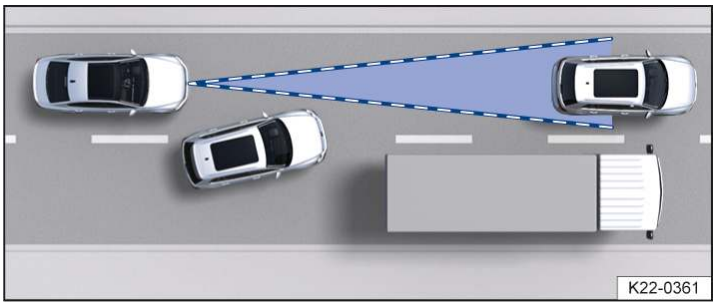

Fig. 3 Vehicle changes lane.

Vehicles that change into your lane directly in front of your vehicle cannot be detected. This also applies to vehicles with bodies or attachments that project beyond the vehicle.

Specific system limits

In addition to the limits of the sensors, each driver assist system also has additional functionally related system limits. Also observe these:

— Predictive speed limiter *(→ Speed limiter with predictive control)*.

— Eco Assistance *(→ Eco assistance)*.

— Adaptive Cruise Control (ACC) *(→ Adaptive Cruise Control (ACC))*.

— Predictive cruise control system *(→ Predictive cruise control system)*.

— Automatic Emergency Braking (Front Assist) *(→ Autonomous Emergency Braking (Front Assist))*.

— Lane keeping system (Lane Assist) *(→ Lane keeping system (Lane Assist))*.

— Semi-automated driving assistance (Travel Assist) *(→ Travel Assist)*.

— Emergency Assist *(→ Emergency Assist)*.

— Lane change system (Side Assist) *(→ Lane change system (Side Assist))*.

— Advanced Road Sign Display *(→ Advanced Road Sign Display)*.

Troubleshooting

No or restricted sensor visibility in forward direction

Some of the sensors at the front of the vehicle are not available or their availability is restricted. The yellow symbol and a text message are displayed for a few seconds.

— The sensor areas are dirty or the visibility of the sensors is impaired due to the weather conditions (e.g. snow) or due to detergent deposits or coatings. Clean the sensor areas at the front of the vehicle and on the windscreen *(→ Vehicle care)*.

— The sensor areas are obstructed by add-on parts, number plate holders with trim frames or stickers. Keep the area around the sensors clear *(→ Accessories and replacement parts)*.

— The sensors have been displaced or damaged, for example due to damage to the front of the vehicle or the windscreen. Check whether damage is visible *(→ Accessories and replacement parts)*.

— Paint work or structural modifications were carried out on the front of the vehicle or windscreen *(→ Repairs and technical modifications)*.

— Fault or malfunction. Deactivate and reactivate the vehicle's drive system.

— When the cause of the problem has been rectified, some driver assist systems will initially remain unavailable. Drive a short distance until the indicator lamp goes out and the driver assist systems are operational again. If the problem persists, go to a suitably qualified workshop. Volkswagen recommends using an authorised Volkswagen repairer.

If the sensor visibility is restricted, driver assist systems may not be available or may be available only to a limited extent. Observe any other indicator lamps of the driver assist systems *(→ Symbols in the instrument cluster)*.

Depending on the malfunction, additional information may be displayed in the vehicle status *(→ Vehicle settings menu)*.

Introduction to the topic

The cruise control system helps to maintain a speed set by the driver.

Speed range

The cruise control system is available when driving forwards at speeds from around 20 km/h (around 15 mph).

Driving with the cruise control system

You can exceed the stored speed at any time, e.g. to overtake. Control is interrupted for the duration of the acceleration manoeuvre and is then resumed with the stored speed.

Displays

When the cruise control system is switched on, the instrument cluster display shows the stored speed and the status of the cruise control system.

One of the following indicator lamps will light up depending on the driving situation:

Cruise control system switched on, control active.

Cruise control system switched on, system control not active.

If no speed is stored, the instrument cluster display shows **---** instead of the speed.

Driving downhill

The vehicle cannot maintain the stored speed in all driving situations. Always be prepared to brake the vehicle.

1. Use the brake energy recuperation of the electric drive on extended downhill stretches.

   This will relieve the load on the brakes.

WARNING

The use of the cruise control system can lead to accidents and serious injuries or even death if traffic does not allow you to drive at a safe distance from the vehicle in front at a constant speed.

- Adapt your speed and the distance from the vehicles ahead to suit visibility, weather, road and traffic conditions. The driver is responsible for the vehicle speed at all times.
- Never use the cruise control system in heavy traffic, if the distance to the vehicles in front is insufficient, on steep or winding roads, on slippery road surfaces, e.g. due to snow, ice, on wet roads, loose chippings, or on flooded roads.
- Never use the cruise control system when driving offroad or on unpaved road surfaces.

Operating the cruise control system

Fig. 1 Left-hand side of the multifunction steering wheel.

Switching on

1. Press the MODE button on the left-hand side of the multifunction steering wheel repeatedly until the cruise control system is selected.
2. Press the OK button on the right-hand side of the multifunction steering wheel or wait for a short time.

   The cruise control system is switched on. The system is not yet active.

Starting control

1. While driving, press the SET button.

   The cruise control system stores and regulates the current speed.

Adjusting the speed

You can adjust the stored speed during speed control by the cruise control system:

+ 1 km/h (1 mph):
  Gently press the + button.

- 1 km/h (1 mph):
  Gently press the – button.

+ 10 km/h (5 mph):
  Press the + button hard or swipe over the button from bottom to top. The first time it is pressed, it jumps to the next higher ten (km/h) or five (mph) increment.

- 10 km/h (5 mph):
  Press the – button hard or swipe over the button from top to bottom. The first time it is pressed, it jumps to the next lower ten (km/h) or five (mph) increment

Press and hold the corresponding button to continuously change the stored speed.

The vehicle adapts the current speed by accelerating or braking.

Cancelling system control

1. Briefly press the CNCL button.

   The speed remains stored in the memory.

Resuming control

1. Press the RES button.

   The cruise control system resumes operation with the stored speed and regulates the speed again.

WARNING

There is a risk of an accident if you unintentionally resume a stored speed or if the stored speed is too high for the current road, traffic and weather conditions. This can cause serious injuries or death.

- Check whether the stored speed is suitable for the current road, traffic and weather conditions before you resume cruise control.
- Switch off the cruise control system when you do not need it.

Troubleshooting

Cruise control system not available

Malfunction. The indicator lamp lights up yellow.

1. Switch off the cruise control system and go to a suitably qualified workshop. Volkswagen recommends using an authorised Volkswagen repairer.

Control is interrupted automatically

— The vehicle has exceeded the stored speed for an extended period.

— No gear is engaged for forward travel.

— Brake support systems, e.g. TCS or ESC, have performed an intervention.

— The vehicle was braked by the Automatic Emergency Braking system (Front Assist).

— If the problem persists, switch off the cruise control system and go to a suitably qualified workshop. Volkswagen recommends using an authorised Volkswagen repairer.

Introduction to the topic

The speed limiter helps to prevent the vehicle from exceeding a speed that you have stored.

Speed range

The speed limiter is available when driving forwards at speeds from around 30 km/h (around 20 mph).

Driving with the speed limiter

You can interrupt the speed limiter function at any time by fully depressing the accelerator beyond the point of resistance. As soon as the stored speed is exceeded, the green indicator lamp will flash and an acoustic warning may sound. The speed remains stored in the memory.

The speed limiter function is activated again automatically as soon as the speed drops below the stored speed.

Displays

When the speed limiter is switched on, the instrument cluster display shows the stored speed and the status of the speed limiter.

One of the following indicator lamps will light up depending on the driving situation:

LIM Speed limiter switched on, system control active.

LIM Speed limiter switched on, system control not active.

Driving downhill

The vehicle cannot maintain the stored speed in all driving situations. Always be prepared to brake the vehicle.

1. Use the brake energy recuperation of the electric drive on extended downhill stretches.

   This will relieve the load on the brakes.

WARNING

Use of the speed limiter in adverse weather conditions is dangerous and can cause accidents and serious injuries or even death.

- Ensure that your speed is always appropriate for the current visibility, weather and road/traffic conditions. The driver is responsible for the vehicle speed at all times.
- Do not drive at full throttle if this is not necessary.
- Never use the speed limiter on slippery roads (e.g. as a result of aquaplaning, snow, ice or leaves).
- In order to avoid unintentional control interventions, switch off the speed limiter when you do not need it.

Operating the speed limiter

Fig. 1 Left-hand side of the multifunction steering wheel.

Switching on

1. Press the MODE button on the left-hand side of the multifunction steering wheel repeatedly until the speed limiter is selected.
2. Press the OK button on the right-hand side of the multifunction steering wheel or wait for a short time.

   The speed limiter is switched on. The system is not yet active.

Starting control

1. While driving, press the SET button.

   The current speed is stored as the maximum speed.

Adjusting the speed

You can adjust the stored speed:

+ 1 km/h (1 mph):
  Gently press the + button.
- 1 km/h (1 mph):
  Gently press the – button.
+ 10 km/h (5 mph):
  Press the + button hard or swipe over the button from bottom to top. The first time it is pressed, it jumps to the next higher ten (km/h) or five (mph) increment.
- 10 km/h (5 mph):
  Press the – button hard or swipe over the button from top to bottom. The first time it is pressed, it jumps to the next lower ten (km/h) or five (mph) increment

Press and hold the corresponding button to continuously change the stored speed.

Cancelling system control

1. Briefly press the CNCL button.

   The speed remains stored in the memory.

Resuming control

1. Press the RES button.

Troubleshooting

! LIM Speed limiter not available

Fault or malfunction. The indicator lamp lights up yellow.

1. Deactivate and reactivate the vehicle's drive system.
2. If the problem persists, switch off the speed limiter and go to a suitably qualified workshop. Volkswagen recommends using an authorised Volkswagen repairer.

Control is interrupted automatically

— ESC is switched off.

— The brakes have overheated. Allow the brakes to cool down and check their functionality again.

— If the problem persists, switch off the speed limiter and go to a suitably qualified workshop. Volkswagen recommends using an authorised Volkswagen repairer.

For safety reasons, the speed limiter switches itself off completely only when you release the accelerator once or switch off the system manually.

Introduction to the topic

The predictive speed limiter automatically adapts a maximum speed that you have stored to detected speed limits.

The predictive speed limiter is an extension of the speed limiter and makes use of Dynamic Road Sign Display and the navigation data provided in the Infotainment system.

The predictive speed limiter is dependent on the vehicle equipment and is not available in all countries.

WARNING

The predictive speed limiter is not a substitute for the full attention of the driver and operates only within the limits of the system. The predictive speed limiter cannot detect all applicable speed limits and may not react or may react with a delay or in an undesired way. If you do not pay due attention, there is a risk of accidents and serious or even fatal injuries.

- Always pay due attention and do not rely exclusively on the system. The driver is responsible for the stored vehicle speed at all times.
- Observe the system limits *(→ Speed limiter with predictive control)*.
- Ensure that your speed is always appropriate for the current visibility, weather and road/traffic conditions.
- Keep the navigation data up-to-date.
- Always observe the maximum speed limit.
- Please note that the speeds regulated by the system do not necessarily correspond to your driving style.

Please also observe the safety-relevant information on the speed limiter.

The system also uses navigation data even if the vehicle does not have a navigation system. Keep the navigation data up-to-date *(→ Navigation)*. If you have any questions, please contact a suitably qualified workshop. Volkswagen recommends using an authorised Volkswagen repairer.

System limits of the predictive speed limiter

In addition to the system limits of the Dynamic Road Sign Display, the predictive speed limiter has the following additional, system-related limits:

— The predictive speed limiter detects only road signs that show a speed limit.

— Road signs that indicate a speed limit indirectly, e.g. place-name signs, will be detected only on the basis of the navigation data.

— If a speed limit is announced on the basis of the navigation data but is not detected by the Dynamic Road Sign Display function, the announced speed will be reset to the last-stored speed.

— The predictive speed limiter is not available for detected speed limits below around 30 km/h (around 20 mph). A corresponding text message is shown on the instrument cluster display in this case.

Joining and leaving motorways

— When you join a motorway, the recommended speed or the maximum permitted speed will automatically be stored as the speed, depending on country.

— The predictive speed limiter will be deactivated when you leave a motorway.

Function limitations

In the following situations, it is possible that the predictive speed limiter will not change the stored speed or will change it with a delay or in an unexpected way:

— There is a fault in the Dynamic Road Sign Display system.

— The navigation data is out-of-date.

— You are driving without route guidance.

— You leave the route calculated by the navigation system.

— The vehicle position cannot be determined correctly due to imprecise GPS data.

Activating the predictive speed limiter

1. Open the Assist systems menu in the Infotainment system.
2. Select the speed limiter.
3. Switch on the reaction to permitted speeds.
4. Switch on the speed limiter and start control *(→ Speed limiter)*.

Driving with the predictive speed limiter

Displays

(30) The system has detected a speed limit on the route.

(30) The system has stored the detected speed limit and performs control interventions accordingly.

Cancelling speed adaptation

If you do not want to adopt an announced speed, you can cancel speed adaptation:

— Press the RES button.

Or: if the announced speed is lower than the currently saved speed, release the accelerator twice and press again.

The last-stored speed is resumed again.

— Press the SET button.

The current speed is adopted.

— Press the CNCL button.

System control is interrupted.

Prioritising speed adaptation

As soon as a higher speed than the currently stored speed is announced in the instrument cluster display, you can prioritise speed adaptation:

1. Press the + button or swipe over the button from bottom to top.

   Or: release the accelerator twice and then press it again.

Adjusting the announced speed

+ 1 km/h (1 mph):
  Gently press the + button.

- 1 km/h (1 mph):
  Gently press the − button.

+ 10 km/h (5 mph):
  Press the + button hard or swipe over the button from bottom to top. The first time it is pressed, it jumps to the next higher ten (km/h) or five (mph) increment.

- 10 km/h (5 mph):
  Press the − button hard or swipe over the button from top to bottom. The first time it is pressed, it jumps to the next lower ten (km/h) or five (mph) increment

If you adjust the announced speed excessively, predictive control will be terminated.

If a speed limit is detected, the predictive speed limiter will adjust the stored speed even if the speed limiter is not regulating.

If the current speed significantly exceeds a speed limit detected by the Dynamic Road Sign Display function, a warning will appear on the instrument cluster display.

Troubleshooting

A message is displayed that the predictive speed limiter is currently not available or is not available in your country

1. If this message is displayed for an extended period and the predictive speed limiter is available in your country, go to a suitably qualified workshop. Volkswagen recommends using a Volkswagen dealership.

Depending on the malfunction, additional information may be displayed in the vehicle status *(→ Digital instrument cluster (Pro))*.

Eco Assistance

The Eco Assistance function helps the driver to drive with an anticipatory driving style and to save energy by providing situation-dependent information.

The Eco Assistance function uses the navigation data of the Infotainment system and the sensors of the driver assist systems. When you drive with route guidance, Eco Assistance also takes into account the entered route. The most probable route is used when you drive without route guidance.

The Eco Assistance function is dependent on the equipment level and is not available in all countries.

Driving with Eco Assistance

Fig. 1 In the head-up display: Eco Assistance display (illustration).

When you approach a speed limit or a road section that has to be taken into account when driving on the route, the symbol and information on the type of event will be displayed on the head-up display and on the instrument cluster display.

As soon as you take your foot off the accelerator, the vehicle adjusts the brake energy recuperation and the speed. The vehicle takes into account the selected driving profile and the distance to the event. In combination with the **D** selector lever position, Eco Assistance automatically adjusts energy recovery to the ideal level.

The available energy recovery level depends on the charge level of the high-voltage battery.

If the accelerator is not pressed, Eco Assistance also supports deceleration for a vehicle driving in front without any displayed message. The system does not use the vehicle brake. When you are driving downhill, the system also cannot brake the vehicle sufficiently in all driving situations.

You can override Eco Assistance interventions at any time by accelerating or braking.

Displays

The following symbols are displayed, depending on driving situation:

Remove foot from accelerator.

Vehicle ahead.

Junction ahead.

Motorway exit ahead.

Roundabout ahead.

Bend to the left ahead.

Bend to the right ahead.

30 Speed limit ahead, example.

Switching on and off

You can switch Eco Assistance on and off in the Assist systems menu of the Infotainment system.

The Eco Assistance function will be automatically deactivated temporarily in the following cases:

— The **Sport** driving profile is activated.

— When driving with Adaptive Cruise Control (ACC).

— When driving with the cruise control system.

However, Eco Assistance displays may still be shown, depending on the situation and driving behaviour.

Eco Assistance will be activated again when the reason for deactivation is no longer present if the function is switched on in the Infotainment system.

WARNING

Eco Assistance is not a substitute for the full attention of the driver and operates only within the limits of the system. Eco Assistance cannot detect all driving situations and may not react or may react with a delay or in an undesired way. If you do not pay due attention, there is a risk of accidents and serious or even fatal injuries.

- Always pay due attention and do not rely exclusively on the system. The driver is always responsible for all driving tasks.
- Always adapt your speed and driving style to the current visibility, weather and road or traffic conditions.
- Please note that road signs on the road and traffic regulations always have priority over driving recommendations.

Introduction to the topic

The Adaptive Cruise Control (ACC) maintains a constant speed that you have set. If the vehicle approaches a vehicle in front, the ACC automatically adapts the speed so that a distance you have selected is maintained.

Does the vehicle have ACC?

The vehicle is equipped with ACC if you can select ACC with the MODE button on the left-hand side of the multifunction steering wheel.

Speed range

You can set the speed to 20 km/h (15 mph) and higher.

Driving with ACC

You can override a control intervention by the ACC system at any time. Cruise control will be stopped if you brake. If you accelerate, control will be interrupted while you are accelerating and then resumed with the set speed.

Driver intervention prompt

If automatic deceleration by the ACC system is not sufficient or the system limits have been reached, the ACC system will request you to brake additionally by a corresponding message on the instrument cluster. In addition, the red warning lamp lights up and an acoustic warning is given. Take over control of the vehicle and be prepared to brake.

WARNING

ACC is not a substitute for the full attention of the driver and operates only within the limits of the system. ACC cannot detect all driving situations and may not react or may react with a delay or in an undesired way. If you do not pay due attention, there is a risk of accidents and serious or even fatal injuries.

- Always pay due attention and do not rely exclusively on the system. The driver is always responsible for all driving tasks.
- Observe the system limits *(→ Adaptive Cruise Control (ACC))*.
- Adapt your speed and the distance from the vehicles ahead to suit visibility, weather, road and traffic conditions.
- Take control of the vehicle immediately if requested to do so by a prompt on the instrument cluster display or if the speed reduction by ACC is not sufficient.
- Brake if the vehicle starts moving unintentionally, e.g. after a driver intervention prompt.

Special driving situations

The functions described below are dependent on the equipment level and are not available in all countries.

Predictive cruise control system

If the vehicle is equipped with the Dynamic Road Sign Display function, ACC can predictively adapt the vehicle speed to detected speed limits and the course of the road ahead .

Overtaking

If you indicate left (left-hand traffic: indicate right) to overtake, ACC can accelerate the vehicle and thus reduce the distance from the vehicle in front. Your set speed will not be exceeded.

If ACC does not detect any vehicle in front after you have changed lane, ACC will accelerate the vehicle up to the set speed.

Stop-and-go traffic

ACC can brake the vehicle to a standstill and keep it stationary. ACC remains active and the instrument cluster display shows **ACC ready to start** for a few seconds.

Vehicles with Travel Assist: You can extend this time by continuing to hold the steering wheel.

As long as ACC remains active, the vehicle will move off again automatically as soon as the vehicle in front moves off and if no obstacle is detected.

Extending or reactivating readiness to drive:

1. Press the RES button.

   Or: Vehicles with Travel Assist: take hold of the steering wheel again.

Moving off when readiness to drive has ended and the vehicle in front has already moved away:

1. Press the RES button.

   Or: depress the accelerator briefly.

ACC remains inactive in the following cases:

— The vehicle is stationary for several minutes.

— The driver door is opened.

— The vehicle's drive system is deactivated.

⚠ WARNING

If the message **ACC ready to start** is shown on the instrument cluster display and the vehicle in front moves off, your vehicle will move off automatically. In some cases, obstacles in the vehicle's path may not be detected. This can result in serious injury and accidents.

- Always check the road ahead before moving off and brake the vehicle if necessary.

Inside Overtaking Prevention System

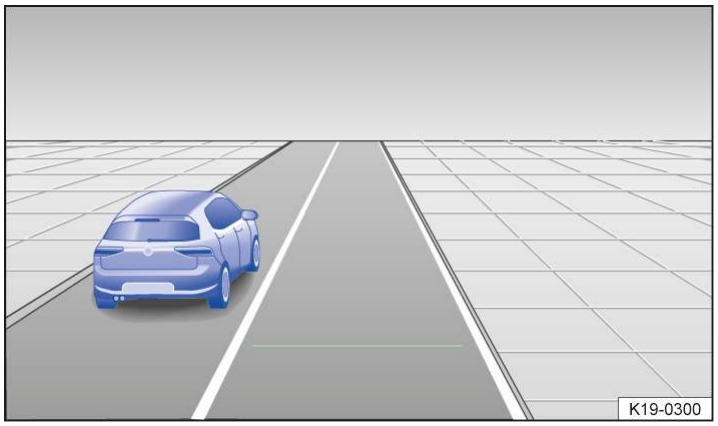

Fig. 1 On the instrument cluster display: slower vehicle detected in the left-hand lane (illustration).

Vehicles with Inside Overtaking Prevention System: If ACC detects a slower vehicle in the left-hand lane (left-hand traffic: in the right-hand lane), ACC will brake the vehicle gently within the system limits and can therefore prevent a prohibited overtaking manoeuvre. The function is active from a speed of around 80 km/h (around 50 mph).

Vehicles without Inside Overtaking Prevention System: When driving on a multi-lane road, cancel control if vehicles in the overtaking lane are driving more slowly.

System limits of ACC

Limits of the sensors

ACC detects driving situations by means of the radar and ultrasound sensors in the front of the vehicle and the camera behind the windscreen. The range of the radar sensor is up to approximately 160 m (around 520 ft).

WARNING

If you use ACC in driving situations that are outside the system limits, this could result in accidents and serious injuries as well as violations of legal regulations.

- Observe the limits of the sensors *(→ Sensors)* and cancel control in the specified situations.

Objects that cannot be detected

ACC detects only vehicles that are moving in the same direction or stationary. The following are not detected:

— Persons.

— Animals.

— Crossing or oncoming vehicles.

— Other stationary obstacles.

Stationary vehicles

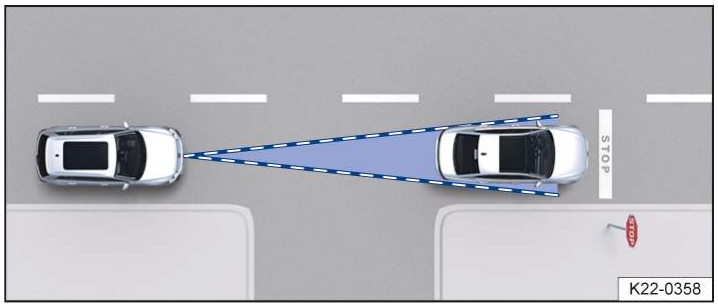

Fig. 1 Stationary vehicle.

ACC reacts to stationary vehicles to a limited extent up to a speed of around 60 km/h (around 37 mph), provided a stationary vehicle is detected and your own vehicle can be comfortably braked behind the stationary vehicle, subject to the system limits of the ACC. ACC does not perform emergency braking *→ Fig. 1*.

The response to stationary vehicles depends on the vehicle equipment and is not available in all countries.

Switching the ACC on and off

Fig. 1 Left-hand side of the multifunction steering wheel.

Switching on

1. Press the MODE button on the left-hand side of the multifunction steering wheel repeatedly until ACC is selected.
2. Press the OK button on the right-hand side of the multifunction steering wheel or wait for a short time.

   ACC is switched on.

Starting control

If you change from Travel Assist to ACC and control by Travel Assist was active, control of the vehicle remains active. ACC is active.

Otherwise you must start control:

1. While driving forwards, press the SET button.

   ACC stores the current speed and maintains the set distance. If the current speed is outside the defined speed range, ACC will set the minimum speed when driving more slowly than the limit or the maximum speed when driving faster than the limit.

   Relevant brake support systems are also activated *(→ Brake support systems)*.

The following indicator lamps light up, depending on the driving situation:

ACC has taken control; no vehicle detected ahead.

ACC has taken control; vehicle detected ahead.

ACC is not performing a control intervention; no vehicle detected ahead.

ACC is not performing a control intervention; vehicle detected ahead.

Cancelling system control

1. Briefly press the CNCL button.

   Or: depress the brake pedal while driving.

   The indicator lamp corresponding to the driving situation lights up grey, the speed and distance remain stored.

If a relevant brake support system is deactivated, control is automatically interrupted *(→ Brake support systems)*.

Resuming control

1. Press the RES button.

   ACC adopts the last set speed and last set distance. The instrument cluster display shows the set speed and the indicator lamp corresponding to the driving situation lights up.

Setting the ACC

Setting the distance

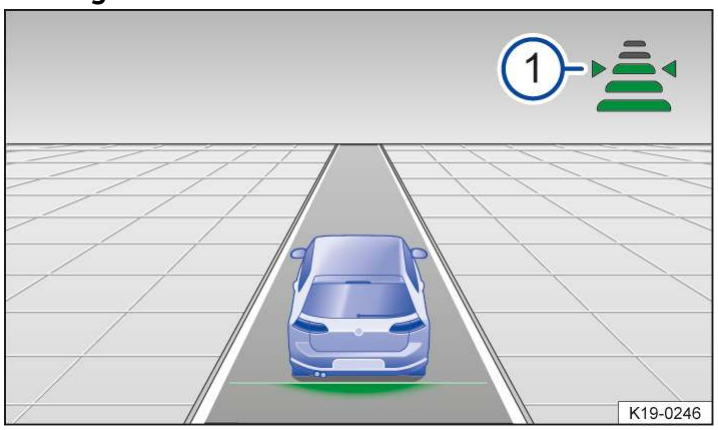

Fig. 1 On the instrument cluster display: set distance for control (illustration).

You can set the distance in five steps from very small to very large:

1. Press the button.
2. Press the + or − button or swipe vertically over the button area from to + or −.

   Or: press the button repeatedly until the required distance is selected.

   The selected setting is shown on the instrument cluster display and head-up display → *Fig. 1* (1). Please observe any country-specific regulations for the minimum distance.

Control always starts at the level that the respective user had set at the end of the last trip.

Adjusting the speed

You can adjust the stored speed within the defined speed range by means of the buttons on the multifunction steering wheel:

+ 1 km/h (1 mph):
  Gently press the + button.

- 1 km/h (1 mph):
  Gently press the − button.

+ 10 km/h (5 mph):
  Press the + button hard or swipe over the button from bottom to top. The first time it is pressed, it jumps to the next higher ten (km/h) or five (mph) increment.

- 10 km/h (5 mph):
  Press the − button hard or swipe over the button from top to bottom. The first time it is pressed, it jumps to the next lower ten (km/h) or five (mph) increment

Press and hold the corresponding button to continuously change the stored speed.

WARNING

ACC cannot detect all driving situations correctly. If you do not maintain the minimum distance to the vehicle in front or if the difference in speed between the vehicle in front and your own vehicle is so great that the braking action of ACC is insufficient, you are in danger of colliding with the vehicle in front. This can cause serious injuries or death.

- Always be prepared to brake the vehicle yourself.
- Press the accelerator to override Adaptive Cruise Control. ACC does not brake automatically in this case.
- Observe any country-specific regulations relating to the minimum distance.
- Always set a larger distance in wet or snowy conditions or when visibility is poor.

Setting the system behaviour

You can influence how dynamically ACC reacts:

— Vehicles with driving profile selection:

  Set preferred driving profile.

— Vehicles without driving profile selection:

  Select the desired gearbox program in the Assist systems menu of the Infotainment system.

Some settings can be stored in the user accounts of the personalisation function and therefore change automatically when the user account changes.

Troubleshooting

ACC not available

The indicator lamp lights up yellow. A message will also appear on the instrument cluster display.

— The radar sensor is dirty. Clean the radar sensor *(→ Vehicle care)*.

— The view of the radar sensor is impaired due to the weather conditions, e.g. snow, or due to detergent deposits or coatings. Clean the radar sensor *(→ Vehicle care)*.

— The view of the radar sensor is impaired by add-on parts, number plate holders with trim frames or stickers. Keep the area around the radar sensor free *(→ Accessories and replacement parts)*.

— The radar sensor has been displaced or damaged, e.g. due to damage to the front of the vehicle. Check whether damage is visible *(→ Accessories and replacement parts)*.

— Fault or malfunction. Deactivate and reactivate the vehicle's drive system.

— Paint work or structural modifications were carried out on the front of the vehicle *(→ Repairs and technical modifications)*.

— If the problem persists, go to a suitably qualified workshop. Volkswagen recommends using an authorised Volkswagen repairer.

The ACC does not function as expected

— The radar sensor is dirty. Clean the radar sensor *(→ Vehicle care)*.

— The ultrasound sensors are dirty, covered or damaged. Clean the ultrasound sensors *(→ Vehicle care)*.

Keep the area around the ultrasound sensors clear and check whether there is any visible damage *(→ Accessories and replacement parts)*.

— The system limits have been exceeded *(→ Adaptive Cruise Control (ACC))*.

— The brakes have overheated, control was cancelled automatically. Allow the brakes to cool down and check their functionality again.

— If the problem persists, go to a suitably qualified workshop. Volkswagen recommends using an authorised Volkswagen repairer.

Depending on the malfunction, additional information may be displayed in the vehicle status *(→ Vehicle settings menu)*.

Control cannot be started

Make sure that the following conditions are met:

— The brake lights on the vehicle are working.

— The brakes lights on the electrically connected bicycle carrier are in working order.

— ESC is not performing a control intervention.

— The brake pedal is not depressed.

Unusual noises during automatic braking

This is normal and is not a fault.

Introduction to the topic

The predictive cruise control adapts the vehicle speed to detected speed limits and the course of the road ahead, e.g. bends, junctions, roundabouts.

The predictive cruise control is an extension of ACC and makes use of Dynamic Road Sign Display and navigation data provided in the Infotainment system.

The predictive cruise control function is dependent on the equipment level and is not available in all countries.

Reaction to the end of a traffic jam

Vehicles with V2X technology (depending on vehicle equipment and not available in all countries) interact with other vehicles in their vicinity. As a result, your vehicle can be informed about a traffic jam ahead and can reduce speed early on.

Prerequisites:

— V2X is activated in the Infotainment system.

— The reaction to the end of a traffic jam is activated in the Infotainment system *(→ Predictive cruise control system)*.

Using swarm data

The predictive cruise control can use online data to improve its function, e.g. to optimise cornering speed (depending on equipment and not available in all countries).

Prerequisites:

— The vehicle is equipped with Travel Assist with swarm data.

— All associated prerequisites are met .

WARNING

The predictive cruise control system is not a substitute for the full attention of the driver and operates only within the limits of the system. The predictive cruise control system cannot detect all applicable speed limits and may not react or may react with a delay or in an undesired way. If you do not pay due attention, there is a risk of accidents and serious or even fatal injuries.

- Always pay due attention and do not rely exclusively on the system. The driver is responsible for the stored vehicle speed at all times.
- Observe the system limits *(→ Predictive cruise control system)*.
- Ensure that your speed is always appropriate for the current visibility, weather and road/traffic conditions.
- Keep the navigation data up-to-date.
- Always observe the maximum speed limit.
- Please note that the speeds regulated by the system do not necessarily correspond to your driving style.

Also observe the system limits and the information for ACC.

The system also uses navigation data even if the vehicle does not have a navigation system. Keep the navigation data up-to-date *(→ Navigation)*. If you have any questions, please contact a suitably qualified workshop. Volkswagen recommends using an authorised Volkswagen repairer.

System limits of predictive cruise control

In addition to the system limits of the Dynamic Road Sign Display function and ACC, the predictive cruise control function is subject to the following additional, system-related limitations:

— The predictive cruise control function detects only road signs that show a speed limit. In particular, predictive cruise control does not take into account the right of way or traffic lights.

— Road signs that indicate a speed limit indirectly, e.g. place-name signs, will be detected only on the basis of the navigation data.

— Road signs with sub-plates containing a restriction that applies only at certain times, for example, will be taken into account only if they are included in the navigation data and if they are recognised by the Dynamic Road Sign Display system.

— Predictive cruise control is not available on roads which are not recorded in the navigation data or not recorded with sufficient accuracy.

— If a speed limit is announced on the basis of the navigation data but is not detected by the Dynamic Road Sign Display function, the announced speed will be reset to the last-stored speed.

— The predictive cruise control system cannot control speeds below the minimum speed *(→ Adaptive Cruise Control (ACC))*.

— The predictive cruise control system cannot detect the intention to turn off in the following situations, for example:

  — A dashed road lane marking was detected on the side on which you have set the turn signal.

  — You have not operated the turn signal for long enough.

Function limitations

In the following situations, it is possible that the predictive cruise control will not change the speed or will change it with a delay or in an unexpected way:

— There is a fault in the Dynamic Road Sign Display system. No speed limit is shown in the instrument cluster display.

— Road signs are not detected or are not detected correctly.

— The navigation data is out-of-date.

— You are driving without route guidance.

— You leave the route calculated by the navigation system.

— The vehicle position cannot be determined correctly due to imprecise GPS data.

— The intention to turn off was not detected or was incorrectly recognised as such.

— You have indicated an intention to turn off too late.

Activating predictive cruise control

You can adjust the settings for the events to which the vehicle should react:

— Reaction to the road layout.

— Reaction to the permitted speed.

— Reaction to the end of a traffic jam.

In the Infotainment system:

1. Open the Assist systems menu.
2. Select Adaptive Cruise Control (ACC).
3. Adjust the setting as desired.

If you have activated at least one event, predictive cruise control will also be switched on automatically when ACC is switched on.

Some settings can be stored in the user accounts of the personalisation function and therefore change automatically when the user account changes.

Driving with predictive cruise control

Driving with route guidance

When you drive with route guidance, the predictive cruise control will adapt the speed to the entered route.

Driving without route guidance

When you drive without route guidance, the predictive cruise control will adapt the speed to the most probable route.

Indicating the intention to turn off

If you indicate the intention to turn off by setting the turn signal, the predictive cruise control can brake the vehicle at the next possible turn-off – irrespectively of whether you are driving with or without route guidance.

Displays

A corresponding message is shown in the instrument cluster display as soon as the system has detected a speed limit or is going to reduce the speed based on the route.

30 Speed limit ahead, example.

30 Speed regulation due to speed limit, example.

Lifting of a speed limit ahead.

Speed regulation due to cancellation of the speed limit.

Roundabout ahead.

Speed regulation due to a roundabout.

Junction ahead.

Speed regulation due to a junction.

Bend to the left ahead.

Speed regulation due to a left-hand bend.

Bend to the right ahead.

Speed regulation due to a right-hand bend.

End of traffic jam ahead.

Speed regulation due to the end of a traffic jam.

When automatic speed control is assumed due to a speed limit, the detected speed is stored as the new desired speed. When automatic speed control is assumed due to the road layout, the vehicle will subsequently accelerate back up to the previously stored speed.

The behaviour of the predictive cruise control depends on the driving profile .

Cancelling speed adaptation

If you do not want to adopt an announced speed, you can cancel speed adaptation:

— Press the RES button.

The last-stored speed is resumed again.

— Press the SET button.

The current speed is adopted.

— Press the CNCL button.

Control is cancelled.

Prioritising speed adaptation

As soon as a higher speed than the currently stored speed is announced in the instrument cluster display, you can prioritise speed adaptation:

1. Press the + button or swipe over the button from bottom to top.

   The vehicle will then accelerate to the detected speed.

Adjusting the announced speed

The announced speed can be adjusted only in the case of speed regulation due to a speed limit.

+ 1 km/h (1 mph):
  Gently press the + button.

- 1 km/h (1 mph):
  Gently press the − button.

+ 10 km/h (5 mph):
  Press the + button hard or swipe over the button from bottom to top. The first time it is pressed, it jumps to the next higher ten (km/h) or five (mph) increment.

- 10 km/h (5 mph):
  Press the − button hard or swipe over the button from top to bottom. The first time it is pressed, it jumps to the next lower ten (km/h) or five (mph) increment

If you adjust the announced speed excessively, predictive cruise control will be terminated.

If a speed limit is detected, the predictive cruise control function will adjust the stored speed even if ACC is deactivated. However, speed regulation will not take place.

When a speed limit is lifted on a motorway, the recommended speed will automatically be stored as the desired speed. However, if a higher speed has previously been stored on a motorway without a speed limit, this will be adopted instead of the recommended speed.

Troubleshooting

A message is displayed that predictive cruise control is currently not available or is not available in your country

1. If this message is displayed for an extended period and predictive cruise control is available in your country, go to a correspondingly qualified workshop. Volkswagen recommends using a Volkswagen dealership.

Depending on the malfunction, additional information may be displayed in the vehicle status *(→ Vehicle settings menu)*.

Introduction to the topic

The Automatic Emergency Braking (Front Assist) can detect imminent frontal collisions and issue corresponding warnings. The system can also assist when braking and initiate automatic braking.

Front Assist can help to avoid accidents, but is not a substitute for the full concentration of the driver.

Front Assist functions only within the system limits. The warning times vary depending on the traffic situation and driver behaviour.

Functions

Front Assist includes the following additional functions:

— Pedestrian Monitoring.

— Cyclist Monitoring.

— Swerve support (depending on equipment and country).

— Oncoming vehicle braking when turning (depending on equipment and country).

The listed functions are automatically active when Front Assist is switched on.

Detectable objects

Front Assist can detect the following objects:

— Vehicles.

— Bicycles and motorcycles.

— Pedestrians.

Driving with Front Assist

You can cancel the automatic braking interventions by steering or pressing the accelerator.

You can cancel automatic steering interventions by steering in the opposite direction.

Automatic braking

Front Assist can decelerate the vehicle to a standstill. The vehicle will then not be held permanently. Depress the brake pedal!

The brake pedal will feel harder during an automatic braking operation.

⚠ WARNING

Front Assist is not a substitute for the full attention of the driver and operates only within the limits of the system. Front Assist cannot detect all driving situations and may not react or may react with a delay or in an undesired way. If you do not pay due attention, there is a risk of accidents and serious or even fatal injuries.

- Always pay due attention and do not rely exclusively on the system. The driver is always responsible for all driving tasks.
- Observe the system limits *(→ Autonomous Emergency Braking (Front Assist))*.
- Adapt your speed and the distance from the vehicles ahead to suit visibility, weather, road and traffic conditions.
- You should consider cancelling the automatic interventions by Front Assist if necessary.
- If Front Assist issues a warning, brake your vehicle immediately depending on the traffic situation or avoid the obstacle.
- If you are unsure about what systems your vehicle has depending on the vehicle equipment and country, please enquire at a suitably qualified workshop before starting your journey. Volkswagen recommends using an authorised Volkswagen repairer.

Warning levels and braking intervention

Speed ranges

Front Assist provides assistance in the following maximum speed ranges:

— Reaction to vehicles: around 5 km/h (around 3 mph) to around 250 km/h (around 155 mph).

— Reaction to bicycles and motorcycles: around 5 km/h (around 3 mph) to around 250 km/h (around 155 mph).

— Reaction to pedestrians: around 5 km/h (around 3 mph) to around 85 km/h (around 53 mph).

The assistance may include an advance warning, an urgent warning and automatic braking or a braking intervention. A distance warning may also be displayed.

Influencing factors

Whether and in what speed range Front Assist reacts to the specified objects depends on the following factors:

— Type of object.

— Direction of travel of the object.

— Speed of the object.

— Speed of the vehicle.

The operating range may therefore be restricted if the vehicle approaches an object very quickly and there is therefore little time for a reaction.

In addition, not all warning levels are used in all situations. Depending on speed, there may not be an advance warning or an urgent warning, for example. Instead, automatic braking may take place immediately in order to ensure optimum protection for the object.

Distance warning

Front Assist detects when safety is endangered by driving too close to the vehicle in front.

The indicator lamp lights up. Increase the distance.

Advance warning

Front Assist detects a possible collision and prepares the vehicle for possible emergency braking.

An acoustic warning sounds and the red warning lamp lights up. Brake or take avoiding action.

Urgent warning

If you do not react to the advance warning, the system may initiate a short braking jolt in order to draw attention to the increasing collision risk. Brake or take avoiding action.

Automatic braking

Front Assist can brake the vehicle automatically in several stages with increasing braking force. The reduced speed means that it is possible to minimise the consequences of an accident.

Braking intervention

If the system detects that you are braking insufficiently when there is a risk of collision, Front Assist can increase the braking force and help prevent a collision. The braking intervention takes place only for as long as you press the brake pedal hard.

System limits of Front Assist

Limits of the sensors

Front Assist detects traffic situations using the radar sensor in the front of the vehicle and a camera behind the windscreen.

Observe the limits of the sensors *(→ Sensors)*. Always pay due attention and intervene yourself if necessary.

After vehicle start

Front Assist is not available or its functions are restricted immediately after the vehicle is started. The white indicator lamp lights up in the instrument cluster display during this time.

Objects that cannot be detected

Front Assist cannot react – or will react with a delay – in the case of the following objects:

— Stationary cyclists.

— When pedestrians and cyclists are not detected, for example because they are partially or fully hidden.

— Animals.

In addition, Front Assist cannot react or will react with a delay in the case of the following objects, depending on equipment and country:

— Oncoming vehicles.

— Crossing vehicles.

— Oncoming pedestrians or cyclists.

Function limitations

In addition to the situations specified in the section on the limits of the sensors, Front Assist may not react or may react with a delay or in an undesired way in the following situations, among others:

— Reversing.

— If ESC is performing a control intervention or faulty.

— If several brake lights on the vehicle are faulty.

— If there is a fault in at least one brake light on a bicycle carrier with an electrical connection to the vehicle.

— If the vehicle accelerates strongly or the accelerator is fully depressed.

— In unclear traffic situations, e.g. vehicles ahead are braking heavily or turning off.

— When driving into and out of tunnels.

— If there is a fault in Front Assist.

Switching off Front Assist

Front Assist is not suitable for use in the following situations due to the limitations of the system and must be switched off → ⚠:

— If the vehicle is utilised in a capacity beyond usage on public roads, e.g. off-road or on a race track.

— If the vehicle is being towed or is loaded onto another vehicle.

— If add-on parts cover the radar sensor or camera.

— If the camera or the radar sensor is faulty.

— After external force on components in the area of the radar sensor, e.g. after a rear-end collision.

— If the windscreen is damaged in the area of the camera window.

— If the vehicle is cleaned in an conveyor car wash.

— In the event of multiple unwanted interventions.

⚠ WARNING

If you use Front Assist in the situations mentioned, this can result in accidents and serious injuries or even death.

- Switch off Front Assist in the specified situations.

Swerve support

The swerve support function can help to steer the vehicle around an obstacle in critical driving situations.

If you steer to avoid an obstacle after an urgent warning, swerve support can help you. Swerve support brakes individual wheels and supports you with a corrective steering intervention as long as you steer.

Speed range

Swerve support is available in a speed range from around 30 km/h (20 mph) up to a maximum speed of around 150 km/h (90 mph).

Limits

Swerve support does not react to crossing objects. Always also observe the fundamental system limits of Front Assist *(→ Autonomous Emergency Braking (Front Assist))*.

Oncoming vehicle braking when turning

The oncoming vehicle braking when turning function can prevent the vehicle from colliding with an oncoming road user during a turn.

If there is a risk of the vehicle colliding with an oncoming vehicle in the adjacent lane when turning, the oncoming vehicle braking when turning function can brake your vehicle. Depending on equipment and country, this also applies to oncoming pedestrians and cyclists. A collision can therefore be avoided.

Speed range

The oncoming vehicle braking when turning function is available up to around 20 km/h (around 15 mph).

Limits

The oncoming vehicle braking when turning function is available only if you indicate, have turned the steering wheel and have therefore started the turning manoeuvre. After changing from right-hand traffic to left-hand traffic or vice versa, the oncoming vehicle braking when turning function is available only after some time.

Always also observe the fundamental system limits of Front Assist *(→ Autonomous Emergency Braking (Front Assist))*.

Operating Front Assist

Front Assist and all the included functions (depending on equipment and country) are automatically switched on when you switch on the ignition.

However, Front Assist is not available or only partially available as long as the white indicator lamp is lit up.

Volkswagen recommends that Front Assist and all the included equipment- and country-dependent functions are switched on at all times. Exceptions *(→ Autonomous Emergency Braking (Front Assist))*.

Switching on and off

You can switch Front Assist on and off manually when the vehicle is stationary.

In the Infotainment system:

1. Open the Assist systems menu.
2. Switch Front Assist on or off in the corresponding submenu.

If you switch off Front Assist, all the included equipment- and country-dependent functions are also switched off. The yellow indicator lamp lights up in the instrument cluster display.

The yellow indicator lamp also lights up if Front Assist has been deactivated automatically, e.g. when towing has been detected.

Setting

If Front Assist is switched on, you can adjust the following settings in the Assist systems menu of the Infotainment system:

— Switch the distance warning on and off; initially always set corresponding to your previous journey.

— Switch swerve support on and off.

— Switch the oncoming vehicle braking when turning function on and off.

Troubleshooting

Front Assist is starting up

The indicator lamp lights up white.

— Front Assist is temporarily unavailable or limited. Front Assist is available after driving straight ahead for a short time, and the indicator light goes out. When the vehicle is not in motion, the indicator lamp lights up continuously.

Front Assist not available or functions restricted

The indicator lamp lights up yellow. A message will also appear on the instrument cluster display.

— The radar sensor or camera window is dirty. Clean the radar sensor and windscreen *(→ Vehicle care)*.

— The view of the radar sensor or camera is impaired due to the weather conditions, e.g. snow, or due to detergent deposits or coatings. Clean the radar sensor and windscreen *(→ Vehicle care)*.

— The view of the radar sensor is impaired by add-on parts, number plate holders with trim frames or stickers. Keep the area around the radar sensor free *(→ Accessories and replacement parts)*.

— The view of the camera is impaired by add-on parts or stickers. Keep the area around the camera window free *(→ Accessories and replacement parts)*.

— The radar sensor or camera has been displaced or damaged, e.g. due to damage to the front of the vehicle or the windscreen. Check whether damage is visible *(→ Accessories and replacement parts)*.

— The camera was deactivated automatically due to a high ambient temperature or prolonged exposure to direct sunlight. When the camera is available again, Front Assist will also be available once more.

— Paint work or structural modifications were carried out on the front of the vehicle *(→ Repairs and technical modifications)*.

— If the problem persists, switch off Front Assist and go to a suitably qualified workshop. Volkswagen recommends using an authorised Volkswagen repairer.

Front Assist does not function as expected or is triggered unnecessarily several times

— The sensors are not working correctly. Check remedies for sensors that are not available or whose availability is restricted → *Front Assist not available or functions restricted*.

— The system limits have been exceeded *(→ Autonomous Emergency Braking (Front Assist))*.

— Low sun or darkness.

— If the problem persists, switch off Front Assist and go to a suitably qualified workshop. Volkswagen recommends using an authorised Volkswagen repairer.

Introduction to the topic

Within the system limits, the lane keeping system (Lane Assist) helps the driver to stay in lane. The function is not designed to keep the vehicle in lane automatically, nor is it suited to this purpose.

If your vehicle moves too close to a road lane marking that Lane Assist has recognised, it will warn the driver with a corrective steering intervention. The corrective steering intervention can be overridden by the driver at any time.

Speed range

When road lane markings can be detected, Lane Assist is ready to intervene at speeds above around 65 km/h (around 40 mph) within the system limits (system status active).

⚠ WARNING

Lane Assist is not a substitute for the full attention of the driver and operates only within the limits of the system. Lane Assist cannot detect all driving situations and may not react or may react with a delay or in an undesired way. If you do not pay due attention, there is a risk of accidents and serious or even fatal injuries.

- Always pay due attention and do not rely exclusively on the system. The driver is always responsible for staying in the lane.
- Observe the system limits *(→ Lane keeping system (Lane Assist))*.
- Adapt your speed and the distance from the vehicles ahead to suit visibility, weather, road and traffic conditions.
- Your hands should always be on the steering wheel so that you can steer at any time.
- Immediately override any undesired intervention by the system by steering.
- Observe the information on the instrument cluster display and respond according to the prompts, if permitted by the traffic situation.

System limits of Lane Assist

Limits of the sensors

Lane Assist detects road lane markings by means of the camera behind the windscreen.

Observe the limits of the camera *(→ Sensors)*. Always pay due attention and intervene yourself if necessary.

Road lane marking that are not detected or not detected correctly

Lane Assist cannot recognise all road lane markings correctly. If road lane markings are not recognised or are incorrectly recognised as such, this may mean that supporting control interventions do not take place or Lane Assist may perform undesired control interventions. In addition to the situations specified in the section on the camera limits, this can occur in the following situations, among others:

— If there are no road lane markings.

— If the driving style is very dynamic.

— When not driving on motorways or well-developed country roads.

— On poor roads, or if road structures or objects are present.

— If there are reflections or glare effects.

Always pay attention and intervene yourself and override an undesired system intervention immediately if necessary. Switch off Lane Assist temporarily if necessary.

Lane Assist not ready to perform control interventions

Lane Assist is not ready to perform control interventions under the following conditions (passive system status):

— ESC Sport is active.

— The vehicle speed is under around 60 km/h (approximately 35 mph).

— Lane Assist has not detected a road lane marking.

— If the lanes are too narrow and in tight bends.

— Temporarily if the driving style is very dynamic.

— If the driver oversteers a system intervention.

— If there is an intervention by the Automatic Emergency Braking system (Front Assist).

Lane Assist is not ready to perform control interventions on at least one side in the following situations:

— If the turn signal is switched on in the direction of the planned lane change.

— On the inside of a bend that you are intentionally driving through well to the inside.

Driving with Lane Assist

Switching on and off

Depending on country, Lane Assist is always switched on when the ignition is switched on. You can also switch Lane Assist on and off in the Infotainment system and view the current activation status there.

1. Open the Assist systems menu.
2. Switch Lane Assist on or off in the corresponding submenu.

Or:

1. Open the Control Centre .
2. Switch Lane Assist on or off.

If you switch Lane Assist off, the yellow indicator lamp will light up in the instrument cluster, depending on country.

If there is a system fault, Lane Assist can switch itself off automatically.

Displays

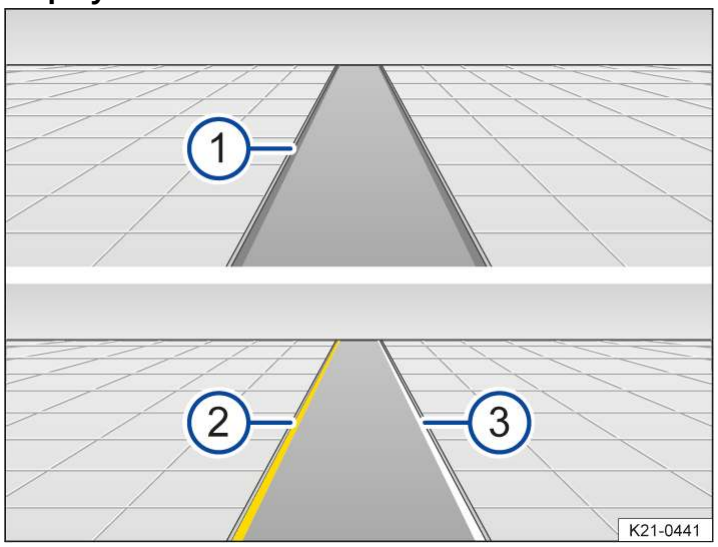

Fig. 1 On the instrument cluster display: Lane Assist displays.

1. Grey line: road lane marking detected. The system is not ready to intervene on the side shown.
2. Yellow line: road lane marking detected. System is actively intervening on the indicated side.
3. White line: road lane marking detected. The system is ready to intervene on the side shown.

Additional details of any lane boundaries may also be shown, such as dashed road lane markings.

One of the following indicator lamps will light up in the instrument cluster depending on the driving situation:

System switched on, passive and not ready to perform control interventions.

System active and ready to intervene on at least one side.

System is actively intervening on the shown side (corrective steering intervention).

If Travel Assist is actively performing a control operation, there is no steering intervention and no display by Lane Assist.

Driver intervention prompt

If there is no steering activity, a corresponding display is shown on the instrument cluster display and acoustic warnings sound.

If you do not react to this, Emergency Assist will be activated, depending on the vehicle equipment.

Independently of the steering activity, a corresponding display is also shown on the instrument cluster display in combination with acoustic warnings if a corrective steering intervention is performed for an extended time.

Steering wheel vibration

You can select the **Steering wheel vibration** option in the Assist systems menu of the Infotainment system. In this case, the steering wheel will vibrate if the vehicle drives over a detected road lane marking when Lane Assist is active.

Troubleshooting

Lane Assist not available

The indicator lamp lights up yellow. A message will also appear on the instrument cluster display.

— The camera window is dirty. Clean the windscreen *(→ Vehicle care)*.

— The view of the camera is impaired due to the weather conditions, e.g. snow, or due to detergent deposits or coatings. Clean the windscreen *(→ Vehicle care)*.

— The view of the camera is impaired by add-on parts or stickers. Keep the area around the camera window free *(→ Accessories and replacement parts)*.

— The camera has been displaced or damaged, e.g. due to damage to the windscreen. Check whether damage is visible *(→ Accessories and replacement parts)*.

— The camera was deactivated automatically due to a high ambient temperature or prolonged exposure to direct sunlight. When the camera is available again, Lane Assist will also be available once more. Deactivate and reactivate the vehicle's drive system.

— Fault or malfunction. Deactivate and reactivate the vehicle's drive system.

— If the problem persists, go to a suitably qualified workshop. Volkswagen recommends using an authorised Volkswagen repairer.

It can take a few seconds before a system fault is detected after the ignition is switched on.

If Lane Assist is not available, Travel Assist is also not available.

The system is not responding as expected

1. Do not attach any objects to the steering wheel.

Introduction to the topic

Within the system limits, Travel Assist allows the vehicle to maintain a distance from the vehicle in front that has been preselected by the driver and stay in the preferred position within the lane (adaptive lane guidance).

Does the vehicle have Travel Assist?

The vehicle is equipped with Travel Assist if you can select Travel Assist with the MODE button on the left-hand side of the multifunction steering wheel.

Speed range

You can set the speed to 20 km/h (15 mph) and higher.

System limits of Travel Assist

Travel Assist detects driving situations with the same sensors as the Adaptive Cruise Control (ACC) and the lane keeping system (Lane Assist).

Observe the system limits and information for ACC and Lane Assist. Always pay due attention and intervene yourself if necessary.

Driving with Travel Assist

Travel Assist automatically regulates the speed and steers the vehicle. Within the system limits, Travel Assist can decelerate the vehicle to a standstill behind a vehicle that is stopping. It can also start driving again by itself.

You can override control by Travel Assist at any time. Cruise control will be stopped if you brake. If you accelerate, Adaptive Cruise Control is interrupted for the duration of the acceleration process; adaptive lane guidance remains active.

Displays

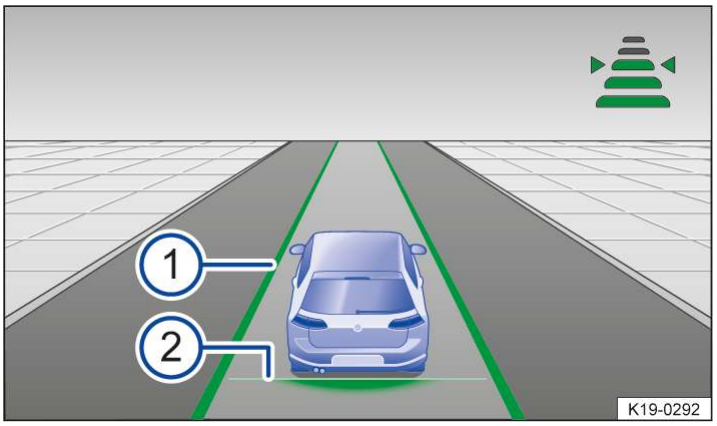

Fig. 1 On the instrument cluster display: active regulation displayed (illustration).

(1) The colour of the road lane marking indicates the status of adaptive lane guidance.

— Green line: adaptive lane guidance active.

— Grey line: adaptive lane guidance passive.

(2) Set distance.

With some equipment levels, additional details of any lane boundaries may also be displayed, such as dashed road lane markings and road users driving in front.

With some equipment levels, a display is also shown on the head-up display

Depending on the driving situation, one of the following indicator lamps lights up on the instrument cluster:

Travel Assist active, Adaptive Cruise Control and adaptive lane guidance active.

Travel Assist passive, Adaptive Cruise Control active, adaptive lane guidance passive.

Travel Assist deactivated, no regulation.

Driver intervention prompt

If you take your hands off the steering wheel, the system prompts you within a few seconds to take over active steering by way of acoustic warnings and a display on the instrument cluster.

Travel Assist will be deactivated if you do not respond to the prompt.

Alternatively, Emergency Assist will be activated (with some equipment levels). Travel Assist will be deactivated if Emergency Assist is not available.

Travel Assist with mass location data

Travel Assist with mass location data uses online map data to enhance the function of Travel Assist (depending on the vehicle equipment and not available in all countries).

This can increase the availability of Travel Assist in selected driving situations, e.g. when lane markings are incomplete or missing on one side.

Prerequisites:

— Travel Assist is activated.

— A personal user account with Volkswagen ID has been set up *(→ Volkswagen ID)*.

— There is a valid contract for use of the online services.

— There is a valid contract for the use of Travel Assist with swarm data.

— An internet connection is established.

— The vehicle is in online mode with location data *(→ Privacy settings)*.

— You are logged in as a user in the vehicle.

— Current swarm data is available for the routes travelled.

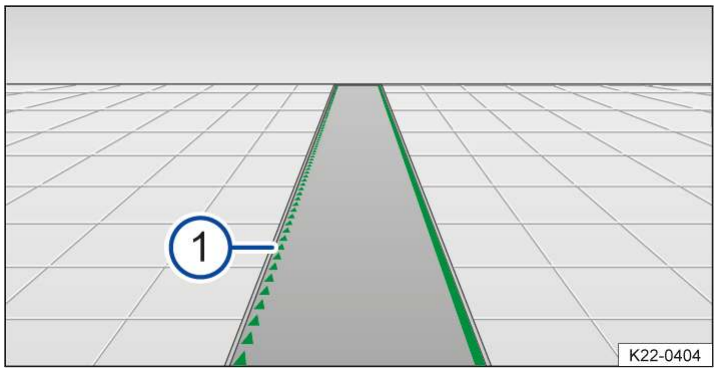

Fig. 2 In instrument cluster display: display during use of swarm data (illustration).

(1) Line with triangles: road lane marking detected through use of swarm data.

⚠ WARNING

Travel Assist is not a substitute for the full attention of the driver and operates only within the limits of the system. Travel Assist cannot detect all driving situations and may not react or may react with a delay or in an undesired way. If you do not pay due attention, there is a risk of accidents and serious or even fatal injuries.

- Always pay due attention and do not rely exclusively on the system. The driver is always responsible for all driving tasks.
- Observe the system limits of ACC *(→ Adaptive Cruise Control (ACC))* and Lane Assist *(→ Lane keeping system (Lane Assist))*.
- Adapt your speed and the distance from the vehicles ahead to suit visibility, weather, road and traffic conditions.
- Your hands should always be on the steering wheel so that you can steer at any time.
- Take control of the vehicle immediately if requested to do so by a prompt on the instrument cluster display or if the speed reduction by Travel Assist is not sufficient.
- Brake if the vehicle starts moving unintentionally, e.g. after a driver intervention prompt.

Operating Travel Assist

Fig. 1 Left-hand side of the multifunction steering wheel.

Switching on

1. Press the MODE button on the left-hand side of the multifunction steering wheel repeatedly until Travel Assist is selected.
2. Press the OK button on the right-hand side of the multifunction steering wheel or wait for a short time.

   Travel Assist is switched on.

Starting control

If you switch from Adaptive Cruise Control (ACC) to Travel Assist, the vehicle will change to the following system statuses in Travel Assist, depending on the driving situation:

— When ACC is active, Travel Assist maintains the current speed and the preset distance to the vehicle in front (system status passive).
  When lane markings are detected, the vehicle is simultaneously kept in the lane by steering movements (system status active).

— If ACC is not active, Travel Assist is switched on but remains deactivated.

You must start system control if you were previously driving with another assist system or if Travel Assist remains deactivated after switching on:

1. Press the SET button.

   Travel Assist switches to active or passive system status according to the driving situation.

   The indicator lamp corresponding to the driving situation lights up in the instrument cluster display.

Cancelling system control

1. Briefly press the CNCL button.

   Or: depress the brake pedal.

   The set distance remains stored.

Making other settings

The other operating functions of Travel Assist correspond to operation of ACC *(→ Adaptive Cruise Control (ACC))*.

Using assisted lane changing

When you set a convenience turn signal, the vehicle can perform assisted lane changing on multi-lane motorways within the system limits if sufficient space has been detected surrounding the vehicle.

Assisted lane changing uses the same sensors as the lane change system (Side Assist) and the parking systems. You should therefore read through the information on Side Assist and the parking systems carefully. Observe the system limits and information provided there.

Prerequisites

Assisted lane changing is available only while driving forward on multi-lane motorways that are included in the navigation data of the Infotainment system and from a speed of around 90 km/h (around 55 mph).

Travel Assist must also be switched on.

Displays

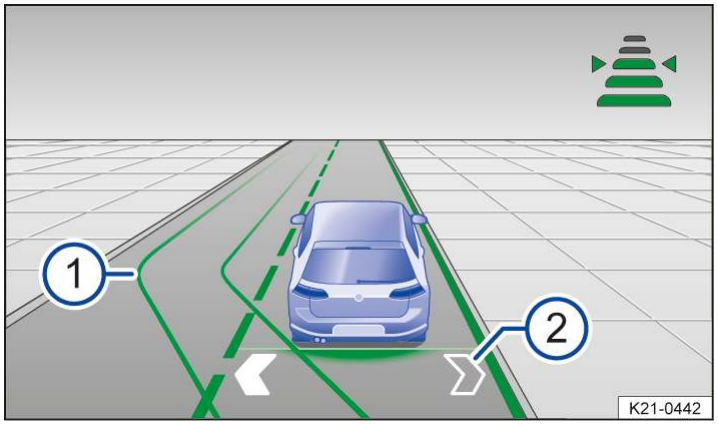

Fig. 1 On the instrument cluster display: assisted lane changing displays (illustration).

1. Indicated lane change (green), assisted lane changing is performed. In addition, the respective neighbouring lane is highlighted.
2. Arrows on your own lane indicate the status of assisted lane changing.
   - Grey arrow: assisted lane changing not possible on the respective lane side.
   - White arrow: assisted lane changing possible on the respective lane side. In addition, the respective neighbouring lane is highlighted.

One of the following indicator lamps lights up in the instrument cluster display, depending on the driving situation:

Assisted lane changing switched on, lane change not possible.

Assisted lane changing possible on the highlighted side (white arrow).

Assisted lane changing is taking place on the side shown.

Switching assisted lane changing on and off

You can switch assisted lane changing on and off in the Infotainment system.

1. Open the Assist systems menu.
2. Select Travel Assist.
3. Activate or deactivate assisted lane changing as a sub-function of Travel Assist.

If there is a system malfunction, assisted lane changing may switch itself off or abort during the lane change.

If Side Assist is not available, assisted lane changing is also not available.

Activating assisted lane changing

If you have started system control by Travel Assist away from a motorway, you must activate assisted lane changing separately.

1. While driving, press the SET button.

Changing lane

If the system has not detected any relevant objects in the sensor system's detection range and assisted lane changing to an adjacent lane is possible, the arrow on the corresponding lane side is shown in white → *Fig. 1* (2).

1. Operate the convenience turn signal for the corresponding side.

   The vehicle now changes lane. A message is also shown on the instrument cluster display and the lane change is indicated → *Fig. 1* (1).

During the lane change, the vehicle automatically flashes on the corresponding side of the vehicle. When the lane change is complete, the turn signal is automatically switched off.

WARNING

The assisted lane changing function is not a substitute for the full attention of the driver and operates only within the limits of the system. Assisted lane changing cannot recognise all driving situations or all objects in the surroundings and may possibly not react or may react with a delay or when not desired. If you do not pay due attention, there is a risk of accidents and serious or even fatal injuries.

- Before every lane change, check to make sure that this is possible safely. Particularly objects that are approaching quickly may not be detected in good time.
- Always keep your hands on the steering wheel and be prepared to control the vehicle speed and direction of travel yourself.

Cancelling a lane change

You can cancel a lane change that has already started.

1. Steer or indicate in the opposite direction.

   The lane change is aborted. The vehicle can be returned to its initial lane.

Deactivating assisted lane changing

1. Briefly press the CNCL button.

   Or: depress the brake pedal.

   Assisted lane changing and Travel Assist are deactivated.

Troubleshooting

Travel Assist is not available or does not function as expected

The indicator lamp lights up yellow. A message will also appear on the instrument cluster display.

— There is a fault in the sensor system. Check the causes and remedies described in the information on ACC or Lane Assist.

— Fault or malfunction. Deactivate and reactivate the vehicle's drive system.

— The system limits have been exceeded.

— If the problem persists, go to a suitably qualified workshop. Volkswagen recommends using an authorised Volkswagen repairer.

Take over steering

The indicator lamp lights up white and a message is displayed in the instrument cluster display.

You have released the steering wheel for a few seconds.

1. Take hold of the steering wheel and take over vehicle control.

Take over steering immediately

The warning lamp lights up red and a message is displayed in the instrument cluster display. An acoustic warning is issued or the steering wheel vibrates, depending on the driving situation.

You have let go of the steering wheel for an extended time or the system limits have been reached.

1. Take hold of the steering wheel immediately and take over vehicle control.

Travel Assist switches off automatically

— Vehicles without Emergency Assist:

You have released the steering wheel for an extended period of time.

— Fault or malfunction. Deactivate and reactivate the vehicle's drive system.

— If the problem persists, go to a suitably qualified workshop. Volkswagen recommends using an authorised Volkswagen repairer.

Control is interrupted unexpectedly

Vehicles without assisted lane changing:

— You have activated the turn signal.

Assisted lane changing not available

The indicator lamp lights up yellow. A message will also appear on the instrument cluster display.

— There is a fault in the sensor system. Check the causes and remedies described in the information on Side Assist and the parking systems.

— If the problem persists, go to a suitably qualified workshop. Volkswagen recommends using an authorised Volkswagen repairer.

Assisted lane changing is cancelled or is not available

A message is shown on the instrument cluster display.

— The vehicle has no longer detected a road lane marking.

— You have let go of the steering wheel.

— You have steered or counter-steered too strongly.

— You have activated the turn signal several times or the turn signal and main beam lever is engaged in position.

— The vehicle speed is under around 85 km/h (approximately 53 mph).

— The vehicle has detected objects in the area around the vehicle that prevent assisted lane changing.

— You are not driving on a multi-lane motorway.

Introduction to the topic

Emergency Assist can detect a lack of activity on the part of the driver and keep the vehicle in the lane automatically, or brake the vehicle to a standstill if required. The system can therefore actively contribute to preventing or reducing the consequences of an accident.

System limits of Emergency Assist

Emergency Assist detects driving situations with the same sensors as the Adaptive Cruise Control (ACC) and the lane keeping system (Lane Assist).

WARNING

Emergency Assist is not a substitute for the full attention of the driver and operates only within the limits of the system. Emergency Assist cannot detect all driving situations and may not react or may react with a delay or in an undesired way. In addition, Emergency Assist cannot always independently prevent accidents. If you do not pay due attention, there is a risk of accidents and serious or even fatal injuries.

- Always pay due attention and do not rely exclusively on the system. The driver is always responsible for all driving tasks.
- Observe the system limits of ACC *(→ Adaptive Cruise Control (ACC))* and Lane Assist *(→ Lane keeping system (Lane Assist))*.
- Adapt your speed and the distance from the vehicles ahead to suit visibility, weather, road and traffic conditions.
- If the vehicle behaves differently than expected, cancel the intervention of Emergency Assist.

Driving with Emergency Assist

Prerequisites

Emergency Assist is always switched on after the ignition is switched on and is ready to intervene if the following prerequisites are met:

— The lane keeping system (Lane Assist) or semi-automated driving assistance (Travel Assist) function is switched on.

— The system has detected at least one road lane marking on the left or right of the vehicle.

If there is a system fault, Emergency Assist is not available.

Driver intervention prompt

If there is no driver activity, Emergency Assist prompts the driver to take control of the vehicle by acoustic warnings and by a braking jolt. A message is also displayed on the instrument cluster display and the volume of the Infotainment system is reduced.

Depending on equipment, the proactive occupant protection system is triggered at the same time.

System intervention

If the driver does not respond, the system can brake the vehicle and keep it in lane if road lane markings are detected.

One of the following warning lamps lights up in the instrument cluster display, depending on the driving situation:

System performing control intervention, adaptive lane guidance active.

System performing control intervention, adaptive lane guidance passive.

You can cancel control at any time by accelerating, braking or steering strongly as appropriate for the driving situation.

Other road users will be warned as follows when Emergency Assist is actively performing control interventions:

— The hazard warning lights will be switched on after a short time.

— The vehicle horn will sound, depending on the speed.

If the remaining stopping distance is sufficient, the vehicle will be braked to a standstill if necessary.

The following will happen as soon as the vehicle is stationary:

— The electronic parking brake is switched on.

— The doors will be unlocked.

— The interior lighting will be switched on.

— An emergency call will be made, depending on the vehicle equipment.

Troubleshooting

Emergency Assist not available

Fault or malfunction. The indicator lamp lights up yellow. A message will also appear on the instrument cluster display.

1. Deactivate and reactivate the vehicle's drive system.
2. If the problem persists, go to a suitably qualified workshop. Volkswagen recommends using an authorised Volkswagen repairer.

The system is triggered in an undesired way or behaves differently than expected

Fault or malfunction.

— Switch off the lane keeping system (Lane Assist).

— Do not use semi-automated driving assistance (Travel Assist).

— Go to a suitably qualified workshop and have the system checked. Volkswagen recommends using an authorised Volkswagen repairer.

Introduction to the topic

The lane change system (Side Assist) helps the driver to recognise the traffic situation behind the vehicle.

Radar sensors behind the rear bumper cover monitor the area behind the vehicle. The system measures the distance and difference in speed in relation to other vehicles and uses visual signals in the exterior mirror housings to inform the driver.

Use Side Assist only on surfaced roads.

Speed range

When Side Assist is switched on, Side Assist is active from a speed of around 15 km/h (around 9 mph). Side Assist is deactivated at a vehicle speed below around 10 km/h (around 6 mph).

WARNING

Side Assist cannot replace the driver's attention and operates only within the limits of the system. Side Assist cannot recognise all driving situations or all objects in the surroundings and may possibly not issue a warning or may issue a warning with a delay or when not desired. If you do not pay due attention, there is a risk of accidents and serious or even fatal injuries.

- Always pay due attention and do not rely exclusively on the system. The driver is always responsible for all driving tasks and lane changes.
- Observe the system limits *(→ Lane change system (Side Assist))*.
- Adapt your speed and the distance from the vehicles ahead to suit visibility, weather, road and traffic conditions.
- Your hands should always be on the steering wheel so that you can steer at any time.
- Observe the displays in the exterior mirror housings and on the instrument cluster display and act in accordance with the requests.

System limits of Side Assist

Limits of the sensors

Side Assist recognises driving situations using the radar sensors at the rear of the vehicle.

Observe the limits of the radar sensors *(→ Sensors)* and always pay due attention.

Function limitations

In addition to the situations specified in the section on the limits of the sensors, Side Assist may not interpret the traffic situation correctly in the following situations, among others:

— When driving in the middle of two lanes.

— When road lanes are of varying width.

— Where there are special roadside structures, e.g. high or offset crash barriers.

Side Assist also does not detect stationary vehicles.

Restricted visibility

It may be hard to see the display in the exterior mirror in direct sunlight.

Calibration

The radar sensors calibrate themselves once in the first few kilometres after vehicle delivery and if the sensors are repaired. The sensor range may be limited during the calibration phase.

Driving with Side Assist

Switching on and off

You can view the current activation status of Side Assist in the Infotainment system. You can also switch Side Assist on and off there.

1. Open the Assist systems menu.
2. Switch Side Assist on or off in the corresponding submenu.

After switching on, the yellow indicator lamps in the exterior mirror housings light up once briefly.

If there is a system fault, Side Assist can switch itself off automatically.

Deactivation for bicycle carrier preparation

If you use the factory bicycle carrier preparation and have set up the necessary electrical connection, Side Assist switches off automatically. After you have disconnected the electrical connection, Side Assist is switched back on automatically.

Displays in the exterior mirror

Fig. 1 In the housings of the exterior mirrors: Side Assist displays.

- Flashing: a vehicle has been detected in the blind spot and the turn signal has also been activated in the direction of the detected vehicle.
- Lit up: your vehicle is being overtaken or you are overtaking another vehicle with a speed difference of up to around 15 km/h (around 9 mph).

  No display will be shown if the overtaking manoeuvre is much faster.

The quicker the vehicle approaches, the earlier it causes the indicator in the exterior mirror housing to light up.

Lane change system “Side Assist Plus”

If the vehicle is equipped with a lane keeping system (Lane Assist) and it is switched on and ready to perform control interventions, you will be warned by a corrective steering intervention when changing lanes during a possible critical situation (information level, warning level). The steering intervention also occurs when you have activated the turn signal for the corresponding direction. If you override the steering intervention, the steering wheel vibrates to give an additional warning. For this, steering wheel vibration must be activated in the Assist systems menu in the Infotainment system.

Brightness

The brightness of the visual display will change automatically depending on the ambient light levels.

You can adjust the basic brightness of the display in the Assist systems menu in the Infotainment system. Side Assist is not active during the adjusting procedure.

Some settings can be stored in the user accounts of the personalisation function and therefore change automatically when the user account changes.

Troubleshooting

Side Assist fault

Fault or malfunction. The indicator lamp in the instrument cluster display lights up yellow. The yellow central warning lamp ⚠ also lights up.

1. Deactivate and reactivate the vehicle's drive system.
2. If the problem persists, go to a suitably qualified workshop. Volkswagen recommends using an authorised Volkswagen repairer.

No sensor visibility, fault message, system switches itself off

— Clean the radar sensors and remove stickers or accessories from the radar sensors or bumper *(→ Vehicle care, exterior)*, *(→ Accessories and replacement parts)*.

— Check for any visible damage *(→ Accessories and replacement parts)*.

— If the problem persists, go to a suitably qualified workshop. Volkswagen recommends using an authorised Volkswagen repairer.

The system is not responding as expected

— The radar sensors are dirty. Clean the radar sensors *(→ Vehicle care, exterior)*.

— The radar sensors are covered by water.

— The view of the radar sensors is impaired due to the weather conditions, e.g. snow, or due to dirt, detergent deposits or coatings. Clean the radar sensors *(→ Vehicle care, exterior)*.

— The system limits have been exceeded *(→ Lane change system (Side Assist))*.

— The vehicle is damaged in the area of the radar sensors, e.g. due to parking collisions. Check for any visible damage *(→ Accessories and replacement parts)*.

— The view of the radar sensors is impaired by add-on parts, bicycle carrier systems or stickers. Keep the area around the radar sensors free *(→ Accessories and replacement parts)*.

— Paint work or structural modifications have been carried out in the area of the radar sensors, at the rear of the vehicle or on the running gear *(→ Repairs and technical modifications)*.

— The side windows have been retrofitted with tinted window films *(→ Repairs and technical modifications)*.

— If the problem persists, go to a suitably qualified workshop. Volkswagen recommends using an authorised Volkswagen repairer.

Parking

1. Depress and hold the brake pedal.
2. Press the button on the driving mode selector to switch on the electronic parking brake.

   The vehicle's drive system is deactivated. The indicator lamp in the digital instrument cluster lights up red →.
3. On uphill and downhill slopes, turn the steering wheel so that the vehicle will roll against the kerb if it starts to move.
4. Release the brake.
5. Get out of the vehicle →. Watch out for other road users!
6. Take all vehicle keys with you and lock the vehicle.

WARNING

If the vehicle is not parked properly, it can roll away even on a slight downhill gradient. This can result in accidents and serious or fatal injuries.

- Before leaving the vehicle, make sure that the electronic parking brake is switched on and that the indicator lamp lights up red in the digital instrument cluster.
- Always follow the described sequence when parking the vehicle.

WARNING

If children, people requiring assistance or animals are left unattended in the vehicle, they could accidentally set the vehicle in motion or be exposed to very high or low temperatures. There is a risk of accidents and serious or fatal injuries.

- Never leave children, people requiring assistance or animals unattended in the vehicle.

Parking spaces and surrounding area

To avoid damage and dangerous situations, always park the vehicle in a suitable parking space →.

NOTICE

The vehicle can slip on uneven, loose, slippery or icy ground. It cannot always be held securely despite the electronic parking brake being switched on. This can result in damage.

- Always park the vehicle on a level and suitable surface.

NOTICE

Low-lying vehicle components such as bumpers, spoilers and parts of the running gear can collide with obstacles protruding from the ground when driving over them. The vehicle may be damaged.

- Drive carefully over drives, ramps, kerbs, borders and dips.

Manoeuvring in a parking space

You can manoeuvre the vehicle at low speed in a parking space when the door is open and the seat belt unfastened. The electronic parking brake does not switch on automatically.

✓ The Auto Hold function was switched off.

1. Operate the foot brake.
2. Using the driving mode selector, shift from to a position **D**/**B** or **R**.
3. Manoeuvre the vehicle carefully.
4. Switch on the electronic parking brake before exiting the vehicle →.

NOTICE

If the vehicle is not left correctly, the electronic parking brake may be activated with a delay. The vehicle may move slightly and be damaged by an obstacle located very close to it, e.g. a garage wall.

- Before leaving the vehicle, make sure that the electronic parking brake is switched on and that the indicator lamp lights up red in the digital instrument cluster.

Rear seat reminder

The function depends on the vehicle equipment.

When the ignition is switched off, a text message in the Infotainment system reminds you not to leave any passengers behind in the rear seats →⚠.

If a rear door was used before the journey, a text message is also displayed in the digital instrument cluster and an acoustic warning may sound. The acoustic warning can be activated and deactivated using the vehicle settings in the Infotainment system.

🔕 Rear seat reminder muted.

Electronic parking brake

Fig. 1 On the driving mode selector: button for the electronic parking brake (illustration).

The electronic parking brake secures the stationary vehicle against rolling away. In an emergency, the vehicle's brakes can be applied.

Switching on

1. When the vehicle is stationary, press the button for the electronic parking brake → *Fig. 1*.

   Or: switch off the ignition.

The indicator lamp in the digital instrument cluster lights up red when the electronic parking brake is switched on.

The **PARK** display also lights up red.

Switching off

1. Press the brake pedal and select a driving position **D**, **B**, **R** or neutral position **N**.

   The red indicator lamp and the **PARK** indicator go out.

Automatic switch-on if the driver does not leave the vehicle correctly

If you leave the vehicle with the ignition switched on or the driving gear or neutral position **N** engaged and the indicator light lights up red, the electronic parking brake has been activated →.

WARNING

If the vehicle is not parked properly, it can roll away even on a slight downhill gradient. This can result in accidents and serious or fatal injuries.

- Always follow the described sequence when parking the vehicle *(→ Parking)*.
- Before leaving the vehicle, make sure that the electronic parking brake is switched on and that the indicator lamp lights up red in the digital instrument cluster.

Holding force on steep gradients

If the slope of the parking location is too steep, it may not be possible for the vehicle to be held continuously.

The indicator lamp in the digital instrument cluster display flashes red and a text message is displayed.

1. Park the vehicle in another parking space with less of a gradient.

The vehicle is not held securely until the indicator lamp lights up continuously.

Deactivating the roll-away protection for car washes or towing operations

In certain situations, the vehicle must remain capable of rolling, e.g. in car washes with conveyor belts. The electronic parking brake must not switch on automatically →ⓘ.

Prerequisites

✓ Vehicle is stationary.

✓ Ignition is switched on.

✓ Electronic parking brake was switched off.

1. Depress the brake pedal.
2. Turn the driving mode selector and select the neutral position **N**.
3. Confirm the text message **The roll-away protection will be deactivated.** on the Infotainment system.

   The vehicle is capable of rolling after leaving the vehicle.
4. To activate the roll-away protection again, press the brake pedal and engage a gear selector position.

   Or: switch off the ignition.

Automatic display of the text message can be deactivated in the vehicle settings of the Infotainment system. The roll-away protection can also be deactivated in this menu.

NOTICE

If the electronic parking brake is switched on, the vehicle may be damaged in the car wash or when towing.

- Deactivate the roll-away protection function in the Infotainment system for these situations.
- Leave the vehicle key in the vehicle. Otherwise, the ignition will then switch off automatically and the roll-away protection function will be activated again.

Emergency braking function

The emergency braking function should be used only in those situations where the vehicle cannot be stopped using the foot brake→ ⚠!

1. Press and hold the (P) button.

   The vehicle brakes strongly. An acoustic warning sounds at the same time.

   The electronic parking brake is switched on when the vehicle comes to a stop.

WARNING

The electronic parking brake is not designed to brake the vehicle, as this increases the braking distance. This can result in accidents and severe or fatal injuries.

- To brake the vehicle, always use the foot brake and never the electronic parking brake, except in an emergency.

Noises may be heard when the electronic parking brake is switched on or off. This can also be the case with an automatic test.

Troubleshooting

Ⓟ and ⓘ/ⓘ Electronic parking brake fault

The Ⓟ indicator lamp flashes red. A yellow or red warning lamp is also displayed.

There is a system fault. The electronic parking brake does not switch on completely or does not switch off when driving.

Do not drive on!

1. Switch the ignition off and then back on again.
2. Select a gear position.
3. Press the button for the electronic parking brake Ⓟ.

   There is no longer a fault present if the Ⓟ indicator lamp lights up red without any other warning lamp lighting up.

Yellow warning lamp ⓘ remains lit

1. Go to a suitably qualified workshop. Volkswagen recommends using an authorised Volkswagen repairer.

Red warning lamp ⓘ remains lit

1. **Do not drive on!**
2. Where possible, park the vehicle on a flat surface and secure it to prevent it from rolling away.
3. Seek expert assistance.

ⓘ Fault in electronic parking brake

The yellow ⓘ warning lamp in the digital instrument cluster display lights up continuously. A text message is displayed.

There is a system fault.

1. Go to a suitably qualified workshop. Volkswagen recommends using an authorised Volkswagen repairer.

Ⓟ/ⓘ Button for the electronic parking brake faulty

When the button for the electronic parking brake is pressed, the Ⓟ indicator lamp flashes red and the yellow warning lamp lights up continuously.

1. Switch off the ignition to switch on the electronic parking brake when parking.
2. Check if the Ⓟ indicator lamp lights up continuously.
3. Go to a suitably qualified workshop. Volkswagen recommends using an authorised Volkswagen repairer.

The electronic parking brake is working but does not switch itself off

— Charging connector is plugged in.

— The 12-volt vehicle battery is discharged *(→ Jump starting)*.

Exit warning system

If another road user is approaching from the rear, the exit warning system issues a warning about obstacles when the doors are opened.

Function

Fig. 1 In the exterior mirror housings: display of the exit warning system (illustration).

Radar sensors behind the rear bumper cover monitor the area behind the vehicle. When cyclists are approaching, for example, the indicator lamps in the housing of the exterior mirror light up yellow → *Fig. 1*.

If a critical situation is detected, the system delays door opening. The indicator lamps first flash briefly and a warning signal sounds → ⚠.

The functions of the exit warning are available depending on equipment.

⚠ WARNING

The exit warning system is not a substitute for the full attention of the driver and works exclusively within the system limits. For stationary, slow-moving or very fast approaching objects, the indicator may not light up or may not light up in time. If you do not pay due attention, there is a risk of accidents and serious injuries.

- Always pay due attention and do not rely exclusively on the system. The driver is always responsible for all driving tasks.
- When opening doors, pay attention to the vehicle surroundings, e.g. pedestrians or cyclists.

Prerequisites

✓ Vehicle is stationary.

✓ The function was switched on in the Infotainment system.

The exit warning system remains active for approximately 3 minutes after the ignition is switched off or the doors are opened for the first time.

1. Switch on the ignition to activate the function again.

Switching on and off

Depending on the country, the exit warning system is always switched on when the ignition is switched on.

1. Tap the [P] function button on the Infotainment system.

   The menu for parking systems is opened.
2. Tap the [⚙ Settings] function button.
3. Switch the exit warning system on or off.

The exit warning system can also be switched on and off in the vehicle settings *(→ Vehicle settings menu)*.

ℹ Depending on country, this setting can be saved in the user accounts of the personalisation function and can therefore change automatically when the user account is changed.

Auto Hold function

The Auto Hold function secures the vehicle against rolling away when stationary, without the vehicle having to be held by the foot brake.

Prerequisites

✓ The vehicle's drive system has been activated.

✓ The driver is in the vehicle.

If gear selector position **N** is engaged, the Auto Hold function will not switch on or will switch itself off. The vehicle will not be kept stationary automatically → ⚠.

Switching on

1. Open the vehicle settings in the Infotainment system *(→ Vehicle settings menu)*.
2. Open the **Brakes** menu.
3. Switch on the Auto Hold function.

   Auto Hold is ready for use, but the car is not necessarily stopped → ⚠.

HOLD The indicator lamp in the digital instrument cluster lights up grey.

The Auto Hold function remains active when the vehicle's drive system is activated again.

The Auto Hold function is available as a quick access function in the Control Centre of the Infotainment system *(→ Introduction to the Infotainment system)*.

Keeping the vehicle stationary with the Auto Hold function

1. Bring the vehicle to a standstill using the brake with the Auto Hold function switched on.
2. Release the brake → ⚠.

   The vehicle will be kept stationary.

HOLD The indicator lamp in the digital instrument cluster lights up green.

The hold function stops if the vehicle is driven off or if the prerequisites for the Auto Hold function are not met.

Switching off

1. Open the vehicle settings in the Infotainment system *(→ Vehicle settings menu)*.
2. Open the **Brakes** menu.
3. Switch off the Auto Hold function.

If the vehicle's drive system has been activated and the Auto Hold function is active, press and hold the brake pedal before switching off → ⚠.

The Auto Hold function can be added as a quick access function in the Control Centre of the Infotainment system *(→ Introduction to the Infotainment system)*.

WARNING

The Auto Hold function is not a substitute for the full attention of the driver and works exclusively within the system limits. The vehicle cannot be held securely under all circumstances, for example on slopes or slippery surfaces. If you do not pay due attention, there is a risk of accidents and serious injuries.

- Always pay due attention and do not rely exclusively on the system. The driver is always responsible for all driving tasks.
- Make sure that the indicator lamp for the Auto Hold function on the digital instrument cluster display lights up green if the vehicle is to be held securely.
- Never leave the vehicle while the vehicle's drive system is active, even if the Auto Hold function is active.

NOTICE

In car washes where the vehicle is towed, an active Auto Hold function can lock the wheels. This could lead to vehicle damage.

- Switch off the Auto Hold function before driving into a car wash.

Safety notes

Limits of sensors and cameras

There are various sensors and cameras on the vehicle which detect and monitor the area around the vehicle by means of ultrasound, radar waves and optical systems. The various parking systems use different combinations of the sensors. Common to all sensors is the fact that they are subject to technical and physical limits →⚠.

— Some objects may not be detected under certain circumstances, such as trailer drawbars, thin bars, fences, posts, trees, very low or high obstacles, as well as open or opening boot lids →ⓘ.

— Environmental and weather conditions can impair functioning, e.g. heavy rain, snow, severe temperature changes.

— The detection ranges of the parking systems have blind spots in which obstacles and people are not registered.

— In some cases, dirt or ice and water on the sensors and cameras could be registered as an obstacle or impair detection of objects. The sensor visibility may be impaired by dirt and snow, as well as residue from cleaning agents or coatings *(→ Vehicle care, exterior)*.

— External sources of sound and certain surfaces on objects and clothing may influence the sensors' signals. In certain circumstances, the systems will be unable to detect or properly detect people and objects.

— Certain objects, for example narrow posts or railings, may be difficult or impossible to see on the screen because of its low resolution or poor light conditions.

— The cameras show only two-dimensional images on the screen. The lack of depth of field means that potholes and protruding objects on the ground may only be detected with difficulty, or may not be detected at all.

⚠ WARNING

The parking systems is not a substitute for the full attention of the driver and operate only within the limits of the respective system. The parking systems cannot detect all driving situations and may not react or may react with a delay or in an undesired way. If you do not pay due attention, there is a risk of accidents and serious or even fatal injuries.

- Always pay due attention and do not rely exclusively on the system. The driver is always responsible for all driving tasks.
- When parking, always look in the direction of travel and observe the vehicle surroundings.
- Pay special attention to small children, animals and objects when parking.
- Do not allow the parking system displays to distract you from the traffic around you.
- Please note that the parking system may not react if an obstacle is approached too fast and will then not issue a warning.
- Ensure that your speed and driving style are always appropriate for the current visibility, weather and road/traffic conditions.

NOTICE

The vehicle can be damaged by obstacles when manoeuvring in parking spaces without kerb borders.

- Observe a safety distance of around 50 cm (around 20 in) from walls and buildings.

ⓘ Volkswagen recommends that drivers practise using the parking systems in a traffic-calmed area or car park in order to familiarise themselves with their functions.

Prerequisites

General information

The following prerequisites must be met so that the sensors and cameras are best able to detect the surroundings of the vehicle and display this information on the Infotainment system screen.

✓ The doors and boot lid are closed.

✓ Exterior mirrors are not folded in.

✓ Sensors or cameras are not covered by add-on parts, e.g. a bicycle carrier, or number plate holders with trim frames. The number plate holder with trim frame must not project at the sides or downwards.

✓ The surrounding area has a flat surface.

✓ Vehicle does not have a heavy load at the rear or on one side.

✓ The vehicle's drive system is activated.

✓ Brake support systems such as ESC or TCS are switched on.

✓ The length and width of the parking space must be larger than the vehicle dimensions and offer sufficient space for manoeuvring.

The parking function and the acoustic warnings will be deactivated if other functions are operated on the Infotainment system during a parking operation. This does not apply when reverse gear is engaged. The parking function cannot be deactivated in this case.

The use of parking systems, e.g. with camera assistance, may not be allowed in some countries and regions due to legal requirements.

Automatic braking intervention

The automatic braking intervention of a parking system is designed to avoid a collision as soon as an obstacle is detected.

Parking systems with braking intervention

Depending on equipment, the vehicle may have parking systems with a manoeuvring or emergency braking function →⚠.

⚠ WARNING

The automatic braking intervention function is not a substitute for the full attention of the driver and operates only within the limits of the system. In some driving situations, the automatic braking intervention may be restricted or undesired or there may be no intervention at all. If you do not pay due attention, there is a risk of accidents and serious or even fatal injuries.

- Always pay due attention and do not rely exclusively on the system. The driver is always responsible for all driving tasks.
- Use the foot brake to brake the vehicle in a hazardous situation before an obstacle.
- React early to warnings from the parking system (e.g. Park Distance Control).

When is the automatic braking intervention available?

✓ The driver has switched on a parking system.

✓ Park Distance Control: manoeuvre braking is activated in the Infotainment system.

✓ The vehicle speed does not exceed a maximum of around 10 km/h (around 6 mph) when manoeuvring.

The automatic braking intervention does not take place if Park Distance Control has been activated automatically when driving forwards *(→ Park Distance Control)*.

After an automatic brake intervention, the function may not be available again until after a short distance or a gear selector position change.

What happens when an automatic braking intervention takes place?

As soon as an obstacle is detected, the vehicle is braked to a standstill and is held for around 2 seconds.

Park Assist Plus: The vehicle brakes to a standstill and is held by the electronic parking brake. The parking procedure is aborted and must be restarted.

Automatic braking intervention by manoeuvre braking. Hold the vehicle with the foot brake!

Automatic braking intervention of Rear Traffic Alert. Hold the vehicle with the foot brake!

A text message may also be shown on the Infotainment system or digital instrument cluster display, depending on the vehicle equipment.

Manoeuvre braking function of Park Distance Control

The manoeuvre braking function is automatically activated every time the ignition is switched on.

Temporary deactivation is possible in the parking system settings in the Infotainment system.

Manoeuvre braking deactivated.

Troubleshooting

The parking system is not responding as expected

— The prerequisites for the parking system are not met *(→ Parking systems)*.

— The sensors or the camera are dirty or iced-up *(→ Vehicle care, exterior)* →ⓘ.

— The ultrasound signal is subject to interference from external noise sources, for example when driving over cobblestones →ⓘ.

— The vehicle is damaged in the area around the sensors or the camera, e.g. caused by parking collisions or an accident →ⓘ.

— Changes have been made to the paintwork or structural modifications have been made in the area of the sensors or the camera, e.g. on the vehicle front end or the running gear →ⓘ.

— The detection ranges of the sensors or camera are blocked by add-on parts, such as bicycle carriers.

Fault displays

1. Observe the text messages on the display of the digital instrument cluster and in the Infotainment system.

NOTICE

The vehicle may be damaged if the parking system is used in spite of a fault in the sensors or cameras or restricted detection ranges.

- In the event of a fault in the parking system, go to a suitably qualified workshop. Volkswagen recommends using an authorised Volkswagen repairer.

No screen display of parking function after activation

The parking system was switched on or activated and the Infotainment system display does not change to the function-specific screen (e.g. the segment display of Park Distance Control or the camera display of Park Assist Plus).

1. Switch the parking system off and then back on again.
2. If the screen display still does not appear, there is a fault in the system. Go to a suitably qualified workshop. Volkswagen recommends using an authorised Volkswagen repairer.

Automatic brake intervention occurs when not desired or too often

The vehicle is braked when not desired, e.g. when driving on off-road terrain or through high grass or when entering a garage.

1. Switch off the parking system temporarily.

   Or: deactivate the manoeuvre braking function in the parking system settings in the Infotainment system.

Fault in exit warning system or Rear Traffic Alert

The exit warning system or Rear Traffic Alert has been deactivated. An error message is displayed.

1. Check sensors on the vehicle for damage or dirt.
2. If the issue persists, go to a suitably qualified workshop. Volkswagen recommends using an authorised Volkswagen repairer.

Introduction to the topic

Park Distance Control assists the driver when parking and provides warnings about obstacles.

Function

Park Distance Control uses ultrasound sensors to detect the distance of the vehicle from an obstacle.

Park Distance Control warns about a collision by means of colour segments on the Infotainment system screen and acoustic signals →.

An automatic braking intervention can take place if the driver does not react when an obstacle is approaching *(→ Automatic braking intervention)*.

WARNING

The Park Distance Control system is not a substitute for the full attention of the driver and operates only within the limits of the system. Park Distance Control may possibly not detect some obstacles and may not react or may react with a delay or in an undesired way. If you do not pay due attention, there is a risk of accidents and serious injuries.

- Always pay due attention and do not rely exclusively on the system. The driver is always responsible for all driving tasks.
- React promptly to the visual and acoustic warnings of Park Distance Control.
- Use the foot brake to brake the vehicle before an obstacle.

NOTICE

Visual and acoustic warnings are given only for obstacles in the vehicle path. The collision area has been reached when the penultimate segment is displayed on the Park Distance Control screen or a continuous acoustic warning sounds, if not before. There is a risk of damage to the vehicle.

- Always brake the vehicle in good time before an obstacle.

NOTICE

With some equipment levels, distances to obstacles in the side areas are also displayed. An obstacle entering these areas from the outside will not be displayed. This may result in damage to the vehicle.

- Drive the vehicle a few metres forwards or backwards in order to scan and display the side areas in full.

Operating Park Distance Control

Switching on

1. Select reverse gear.

   Or: tap the P function button on the Infotainment system. Then tap the or function button.

   Or: the vehicle rolls backwards.

Switching off

1. Shift out of an engaged reverse gear.
2. Then tap the home button ▢ or the function button in the upper area of the Infotainment system.

   Or: switch on the electronic parking brake.

Park Distance Control also switches itself off if the vehicle is driven forwards at higher speed.

Displays

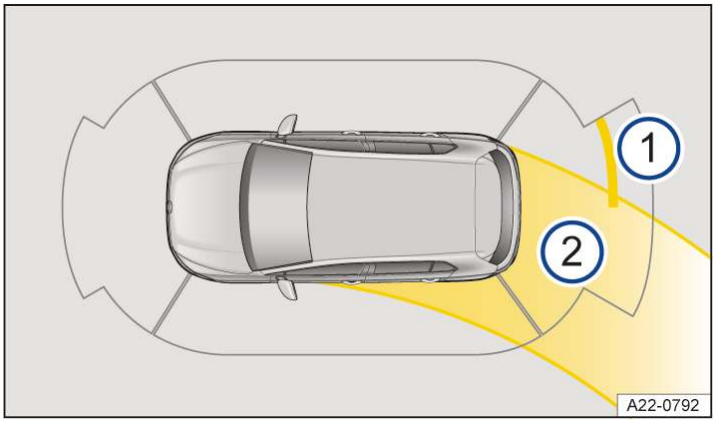

Fig. 1 Infotainment system: Park Distance Control display (illustration).

1 Obstacle detection.

2 Steering wheel angle.

Red image segment: close obstacle. The vehicle is at risk. Brake!

Yellow image segment: obstacle in the vehicle path. The vehicle is at risk. Adjust the steering wheel angle.

Grey image segment: obstacle outside the path of the vehicle or faulty sensor area.

Manoeuvre braking is deactivated or faulty.

Mute audio signals.

Selecting settings

1. Tap the P function button on the Infotainment system.
2. Tap Settings.
3. Tap Park Distance Control settings.
4. Select a setting, e.g. automatic activation when driving forwards, volume of the acoustic signal.

Some Park Distance Control settings, e.g. the volume of the acoustic signals, can be stored in the personalised user accounts. The settings change automatically when the user account is changed.

Automatic activation when driving forwards

Park Distance Control is activated automatically at speeds below around 15 km/h (around 9 mph) when an obstacle is encountered in the front area, e.g. when driving into a garage.

The function can be switched on and off in the Infotainment system.

No automatic braking intervention takes place *(→ Automatic braking intervention)*.

The screen display in the Infotainment system appears first. An acoustic signal will sound if the obstacle is very close.

Automatic activation takes place only once. It is available again under the following conditions:

— If the vehicle was accelerated to a speed above around 15 km/h (around 9 mph), slow down below this speed again.

— **Or:** switch the ignition off and then back on again.

Troubleshooting

! No sensor visibility, or there is a fault in the Park Distance Control

The sensor area is switched off permanently if a sensor fails. The **!** symbol indicates the affected sensor area in the Infotainment system.

If there is a fault in the Park Distance Control, a signal tone will sound for several seconds when it is switched on. A text message may also be displayed.

If necessary, Park Distance Control is switched off completely and the P OFF symbol is displayed.

1. Check whether there is a fault in the parking system due to an external cause *(→ Parking systems)*.
2. Switch the system on again once you have rectified the source of the fault.
3. If the issue persists, go to a suitably qualified workshop. Volkswagen recommends using an authorised Volkswagen repairer.

Manoeuvre braking restricted or unavailable

A text message is displayed.

The automatic braking intervention occurs unexpectedly or unusually. If the function is switched off, there is no automatic braking intervention.

1. Check sensors on the vehicle for damage or dirt, and clean if necessary *(→ Vehicle care, exterior)*.
2. Switch the ignition off and then back on again.
3. If the issue persists, go to a suitably qualified workshop. Volkswagen recommends using an authorised Volkswagen repairer.

Introduction to the topic

The rear view camera system in the rear of the vehicle makes it easier for the driver to see behind the vehicle and provides support for parking manoeuvres.

Function

The rear view camera system shows the area behind the vehicle on the Infotainment system screen. Depending on the operating mode and equipment level, orientation lines aid the view to the rear →⚠.

⚠ WARNING

The reversing camera is not a substitute for the full attention of the driver and works exclusively within the system limits. Using images from the camera to estimate the distance from persons or obstacles can be inaccurate. If you do not pay due attention, there is a risk of accidents and serious injuries.

- Always pay due attention and do not rely exclusively on the system. The driver is always responsible for all driving tasks.
- Note that camera lenses can enlarge and distort the field of view.

In the camera image, the orientation lines are shown by the system regardless of the vehicle surroundings. No automatic detection of obstacles by cameras takes place. Drivers must judge for themselves whether the vehicle will fit into the parking space.

No orientation lines will be shown when the boot lid is open on vehicles where the camera is installed in the boot lid.

⚠ CAUTION

Vehicles with a swivelling Volkswagen badge: people can sustain crush injuries when the rear view camera system is extended.

- When engaging reverse gear, make sure that nobody is positioned directly at the boot lid who reaches into the path of the Volkswagen badge on the boot lid.

Switch the rear view camera system on and off

Switching on

Rear view camera system with parking mode selection:

1. Select reverse gear.

   Or: tap the P function button and then on the Infotainment system.

Switching off

Rear view camera system with parking mode selection:

1. Shift out of an engaged reverse gear.
2. Tap the home button ▢ or the function button in the upper area of the Infotainment system.

The rear view camera system also switches itself off if the vehicle is driven forwards at higher speed.

Driving into a parking space (rear view camera system with parking mode selection)

Displays

Perpendicular parking: Guide lines provide support when reversing into a parking space at right angles to the road.

Crossing traffic: Shows a wide-angle view of the area behind the vehicle and the side areas.

Trailer or off-road support: Shows the area directly behind the vehicle with an enhanced zoom factor and guide lines (depending on equipment).

Red line: boundary or vehicle safety clearance.

Yellow lines: vehicle path depending on the steering angle.

Green horizontal lines: boundaries.

Enlarge the image area.

Clean the rear view camera system (depending on equipment in vehicles without rear window wiper).

Parking mode: parking perpendicular to the road

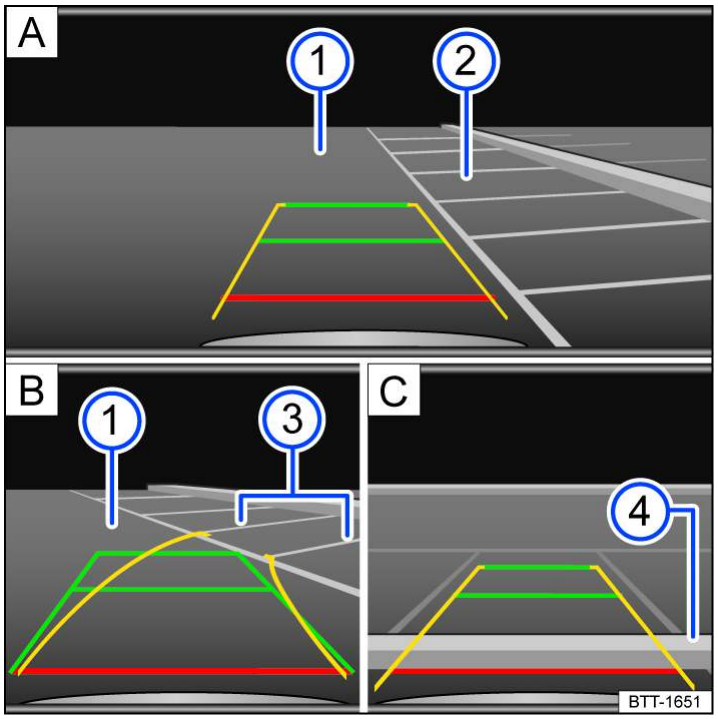

Fig. 1 Infotainment system: parking perpendicular to the road.

- (A) Choose parking space.
- (B) Drive towards the selected parking space.
- (C) Align the vehicle in the parking space.
- (1) Road.
- (2) Parking space.
- (3) Side limit of the parking space.
- (4) Rear limit of the parking space.

1. Before driving past the selected parking space, tap the [P] function button for the parking menu.
2. Tap the [ ] function button.
3. To select the parking mode, tap the [ ] function button in the Infotainment system.
4. Position the vehicle in front of the parking space → *Fig. 1* [A] (2).
5. Steer the vehicle so that the yellow lines lead into the parking space. The green and yellow lines must be aligned with the side limit lines → *Fig. 1* [B] (3).
6. Stop when the red line reaches the rear boundary → *Fig. 1* [C] (4).

Troubleshooting

Fault in camera image of the rear view camera system

The camera image is unclear, is flickering or has been disabled.

There may be a technical fault.

1. Clean the rear view camera system if the camera image is unclear *(→ Vehicle care, exterior)*.

   Or: check whether there is a fault in the parking system due to an external cause *(→ Parking systems)*.

2. If the issue persists, go to a suitably qualified workshop. Volkswagen recommends using an authorised Volkswagen repairer.

Introduction to the topic

Area View can show the entire vehicle surroundings in real time. This function can help you to detect obstacles at an early stage in confusing situations.

Function

Area View uses several cameras, e.g. in the rear area of the vehicle, at the front and in the exterior mirrors, to show the area around the vehicle, →⚠.

⚠ WARNING

Area View is not a substitute for the full attention of the driver and operates only within the limits of the system. Using images from the camera to estimate the distance from persons or obstacles can be inaccurate. If you do not pay due attention, there is a risk of accidents and serious injuries.

- Always pay due attention and do not rely exclusively on the system. The driver is always responsible for all driving tasks.
- Note that camera lenses can enlarge and distort the field of view.

Switching on and off

Switching on

1. Tap the P function on the Infotainment system and then .

   Or: engage reverse gear.

Switching off

1. Shift out of an engaged reverse gear.
2. Tap the home button ▢ or the P function button in the upper area of the Infotainment system.

Area View also switches itself off if the vehicle is driven forwards at higher speed.

Changing the camera view

Screen areas

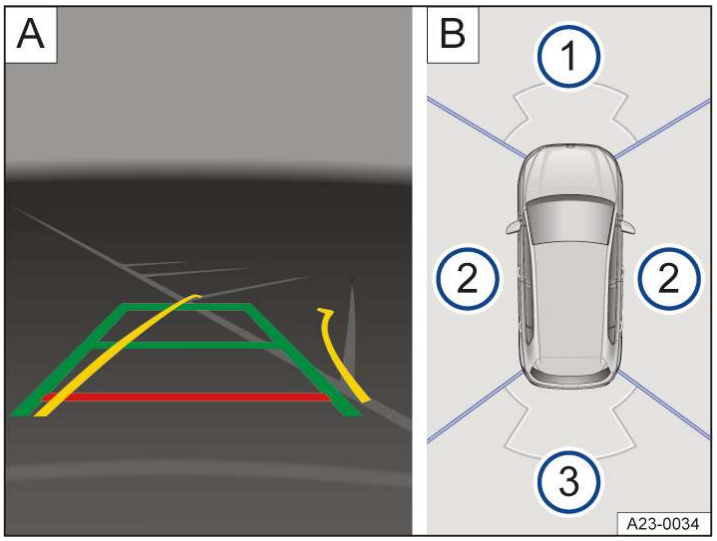

Fig. 1 Infotainment system: Area View with “perpendicular parking mode” camera image (illustration).

- (A) Camera image.
- (B) Bird’s eye view with selectable screen areas.
- (1) Area of the screen showing the front camera image.
- (2) Area of the screen showing the camera image for both sides of the vehicle.
- (3) Area of the screen showing the rear camera image.

Two screen areas are displayed on the Infotainment system → *Fig. 1*:

1. To display the desired camera image on the left → *Fig. 1* A, tap the area of the screen on the right for the front, rear or side view → *Fig. 1* B.

Changing the screen display

Other displays of the area around the vehicle can be shown on the screen depending on the selected camera image.

1. Tap the corresponding function button at the edge of the screen.

Front perpendicular parking.

Guide lines provide support when driving forwards into a parking space at right angles to the road.

Front crossing traffic.

Area in front of the vehicle with a wide angle.

Rear perpendicular parking.

Guide lines provide support when reversing into a parking space at right angles to the road.

Rear crossing traffic.

Area behind the vehicle with a wide angle.

Switch to trailer or off-road support (country-dependent).

Other screen displays

Red line: boundary or vehicle safety clearance.

Yellow lines: vehicle path depending on the steering angle.

Green horizontal lines: boundaries.

Enlarge the image area.

Clean the rear view camera system (depending on equipment in vehicles without rear window wiper).

Bird's eye view of the vehicle

1. Tap the vehicle graphic in the screen area → *Fig. 1* (B).

   All areas around the vehicle are shown in a large screen view.

Troubleshooting

Observe the troubleshooting information for the rear view camera system *(→ Rear view camera system)*.

Area View camera faulty

A camera is malfunctioning. The Area View image cannot be created.

There may be a technical fault.

1. Check the cameras in the exterior mirrors as well as in the front and rear areas of the vehicle for damage or contamination.
2. If the issue persists, go to a suitably qualified workshop. Volkswagen recommends using an authorised Volkswagen repairer.

Introduction to the topic

Park Assist (Park Assist Plus) detects a suitable parking space and manoeuvres the vehicle automatically into the space.

Function

Park Assist Plus takes control of the steering, changes in gear selector position, acceleration and braking of the vehicle →, →.

Available functions

— Display suitable parking spaces on the Infotainment system.

— Load new parking space selection on the Infotainment system.

— Drive into suitable parallel and bay parking spaces.

— Drive out of a suitable parallel parking space. Bay parking spaces are not supported.

The driver must always monitor the area around the vehicle →. An automatic braking intervention can occur if there are obstacles in the vehicle's path or if a hazardous situation occurs *(→ Automatic braking intervention)*.

Automatic hands-free parking with Park Assist Plus may be prohibited or restricted in some countries or regions. Observe legal requirements.

When driving past the parking space, the maximum speed for parking spaces parallel to the road should be around 40 km/h (around 25 mph). The maximum speed for parking spaces perpendicular to the road should be around 20 km/h (around 12 mph).

For safety reasons, Park Assist Plus is not available in fast-moving traffic at speeds above around 50 km/h (around 32 mph).

Driving with a bicycle carrier

Park Assist Plus cannot be activated if a bicycle carrier is electrically connected to the factory-fitted bicycle carrier preparation.

WARNING

Park Assist Plus is not a substitute for the full attention of the driver and operates only within the limits of the system. Park Assist Plus cannot detect all driving situations and may not react or may react with a delay or in an undesired way. If you do not pay due attention, there is a risk of accidents and serious or even fatal injuries.

- Always pay due attention and do not rely exclusively on the system. The driver is always responsible for all driving tasks.
- Use the foot brake to slow the vehicle in a hazardous situation.
- Only park the vehicle if you hold a valid driving licence.
- Observe the road traffic regulations of the respective country.
- Do not leave the driver seat during the parking manoeuvre.
- Do not park in parking spaces without structural boundaries, such as those close to the edge of bodies of water or close to slopes without any structural separation.

WARNING

The system can respond only to a limited extent to quickly changing external conditions. This can result in collisions with other road users and can lead to vehicle damage as well as serious or fatal injuries.

- Do not use the parking system in fast-moving traffic.
- Always observe at least one vehicle length from junctions.
- Do not perform a parking procedure when facing oncoming traffic or across several lanes.

WARNING

The vehicle can swing out or move into the path of oncoming traffic during the automatic parking procedure. This can result in accidents and serious or fatal injuries.

- Pay careful attention to the parking procedure and the traffic around you and brake the vehicle if necessary.

WARNING

In slippery conditions, the parking procedure cannot be carried out correctly and the vehicle may begin to slide. This can cause accidents and vehicle damage.

- Do not park using Park Assist Plus on icy or frozen roads.

NOTICE

Park Assist Plus may suggest parking spaces that are not suitable for the parking procedure due to the lack of boundaries or due to adjacent objects that could interfere with the parking procedure. This can result in damage to the vehicle.

- Do not park next to overhangs, e.g. loading ramps and parked trailers or under hanging objects.
- Pay close attention to the parking procedure in multi-storey car parks where the parking space is limited by pillars.

Park Assist Plus may not be available in some regions of a country for technical reasons.

— Observe the display on the Infotainment system.

Looking for a parking space

Possible parking modes

The following parking modes are displayed with the parking spaces shown horizontally and vertically on the Infotainment system → *Fig. 3* (3) or (4).

— Forward perpendicular parking.

— Reverse perpendicular parking.

— Reverse parallel parking.

Looking for a parking space

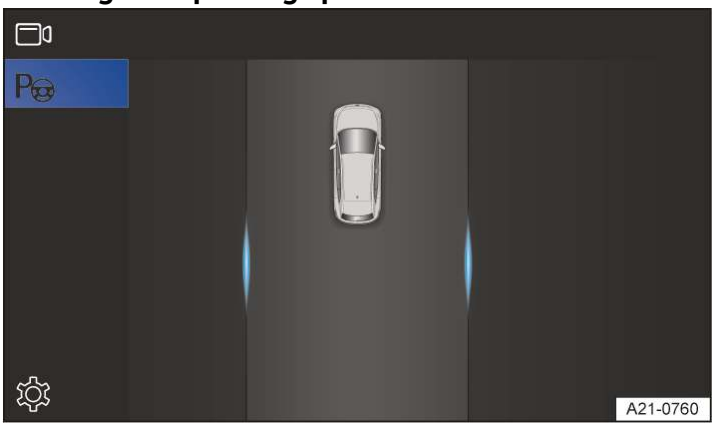

Fig. 1 Infotainment system: Park Assist Plus looking for a parking space (illustration).

1. To switch to Park Assist Plus, tap the [P] function button for the parking menu in the Infotainment system.
2. Drive slowly past a row of parked vehicles, paying attention to the traffic.

   Park Assist Plus automatically searches for possible parking spaces → *Fig. 1*.

Parking space display

Fig. 2 Infotainment system: parking spaces detected (red number).

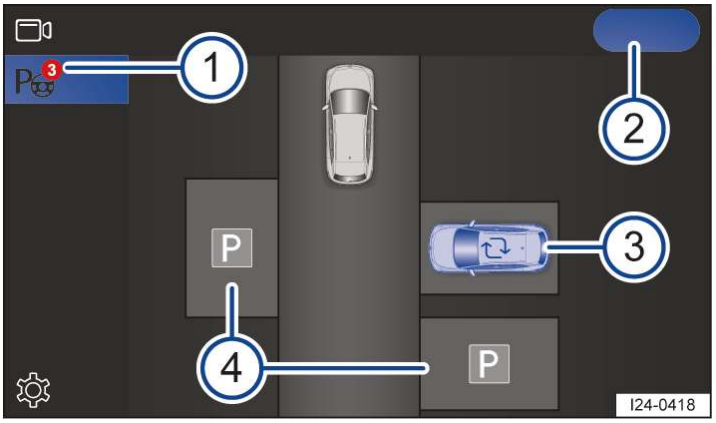

Fig. 3 Infotainment system: selecting a parking space (illustration).

(1) Number of parking spaces.

(2) Start parking procedure.

(3) Preferred parking space (blue vehicle).

symbol: load new parking space selection.

(4) More parking spaces.

When parking spaces have been found, a red number appears on the P function button in the app overview or function button in the parking menu of the Infotainment system → *Fig. 2*, → *Fig. 3* (1).

A preferred parking space is displayed in the Park Assist Plus menu → *Fig. 3* (3).

1. Decelerate to a standstill.
2. Press and hold the brake pedal.

Changing the parking space

If several parking spaces are detected along the road, it is possible to change to another parking space.

1. Tap the desired parking space on the Infotainment system screen → *Fig. 3* (4).

   A new preferred parking space is displayed (blue vehicle).

Loading a new parking space selection

1. If available, tap the symbol → *Fig. 3* (3).

   A corresponding parking view is displayed.

Park Assist Plus can be activated later. If the vehicle has previously driven past a suitable parking space, it will be displayed.

Driving into a parking space

Prerequisites

✓ Park Assist Plus has been activated.

✓ A parking space has been found and selected.

✓ The vehicle is in the starting position and the path is shown in blue on the Infotainment system.

Driving into a parking space

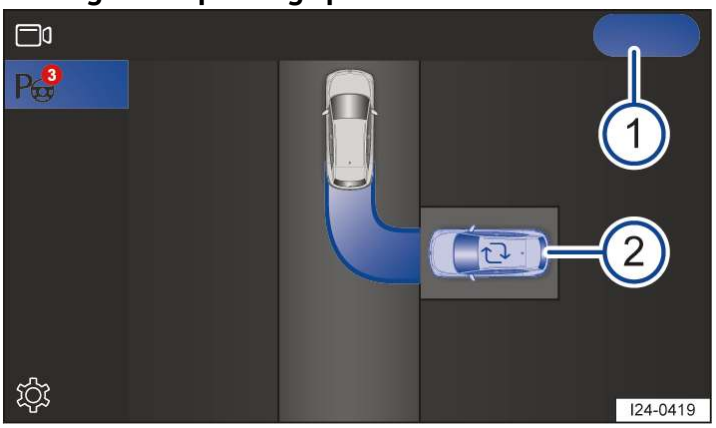

Fig. 1 Infotainment system: parking manoeuvre (illustration).

(1) Start parking manoeuvre.

(2) Parking bay.

1. Hold the vehicle with the brake pedal.
2. Tap Start on the Infotainment system → *Fig. 1* (1).

   The parking procedure for driving into a space starts.

   The P symbol and a text message are displayed on the Infotainment system → ⚠.
3. Observe any other displays on the Infotainment system.

   If necessary, Park Assist Plus will independently change the vehicle's direction of travel.
4. To ensure the best possible parking result, always wait until the steering wheel movements have been completed → ⚠.

   At the end of the parking manoeuvre, a text message is displayed on the Infotainment system and an acoustic signal sounds.

   The electronic parking brake is switched on.

⚠ WARNING

The steering wheel is turned quickly during manoeuvring. Reaching into the steering wheel can cause serious injuries.

- Take over steering only when the system requests you to do so.
- Take over steering in a hazardous situation.

The lane that is displayed in the Infotainment system during a parking process is a schematic representation. It does not correspond to the actual parking procedure performed by Park Assist.

The speed for automatic parking can be reduced by operating the brake pedal.

To prevent the vehicle from rolling away on uphill gradients, the steering wheel is automatically turned at the end of the parking procedure (country-dependent).

Driving into a parking space after an unfinished manoeuvre

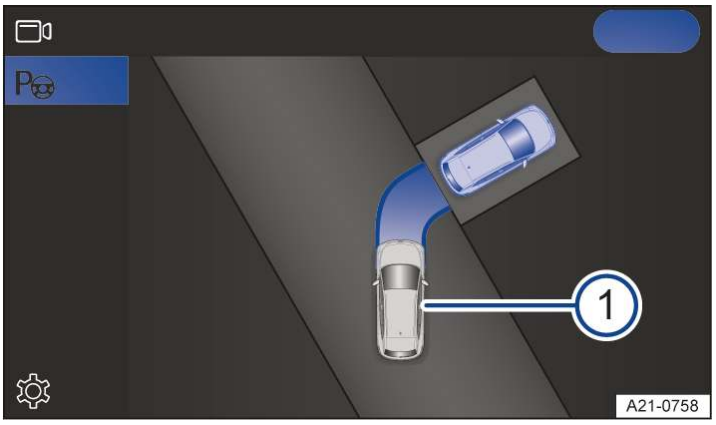

Fig. 2 Infotainment system: take over manual parking manoeuvre.

(1) Vehicle not fully parked in the parking space.

In a difficult parking situation in which the driver has started driving into a space but has not completed the manoeuvre, Park Assist Plus can take control of the parking procedure and guide the vehicle into the parking space → *Fig. 2*.

Prerequisites

✓ Park Assist Plus is not activated.

✓ The front or rear of the vehicle has been driven into a parking space (the manoeuvre has been started but not completed).

1. Hold the vehicle with the brake pedal.

   In the app overview of the Infotainment system, a red number for a parking space is displayed on the P function button.

2. Tap the P function button to switch to Park Assist Plus.
3. To start the parking manoeuvre, tap Start on the screen.
4. Observe the Infotainment system displays.

Driving out of a parking space

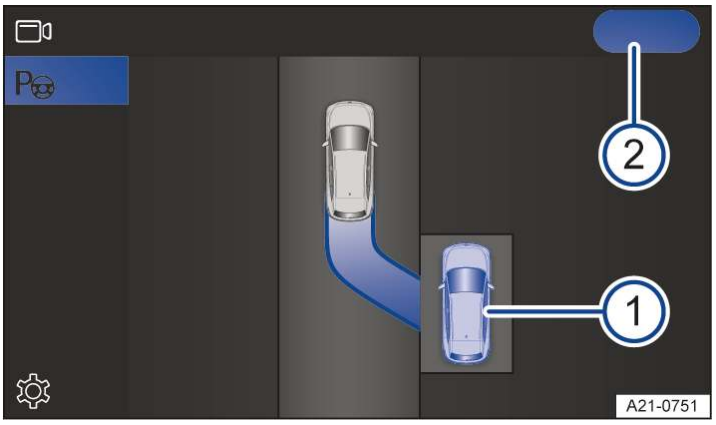

Fig. 1 Infotainment system: start the procedure for driving out of a parking space (illustration).

(1) Vehicle in a parallel parking space.

(2) Start to drive the vehicle out of the parking space.

1. Activate the vehicle's drive system.
2. Press and hold the brake pedal.
3. Activate Park Assist Plus in the Infotainment system .
4. Use the turn signal lever to select the direction (left or right) in which you would like to drive out of the parking space.
5. Tap Start on the Infotainment system screen → *Fig. 1* (2).

   The parking procedure for driving out of a space starts.

   The symbol and a text message are displayed on the Infotainment system.
6. Observe any other displays on the Infotainment system.

   The vehicle stops after a few metres. At the end of the manoeuvre for driving out of the parking space, a text message is displayed and an acoustic signal sounds.

   The parking system does not manoeuvre the vehicle further into the driving lane.
7. Take control of the vehicle and drive all the way out of the parking space in the direction of travel → ⚠.

The lane displayed in the Infotainment system is an illustration. It does not correspond to the actual parking procedure.

⚠ WARNING

When driving out of a parking space, there is a danger that the vehicle could drive into moving traffic. This can lead to an accident and to serious or fatal injuries.

- Drive the vehicle out of the parking space only when permitted by the traffic situation.

⚠ WARNING

Park Assist Plus does not support exiting from bay parking spaces as obstacles in traffic cannot be fully detected. There is a risk of accidents and serious injuries.

- When driving out of bay parking space, park independently and keep an eye on the traffic.

Troubleshooting

Park Assist Plus was deactivated or cancelled

The parking system has been deactivated or there is a fault. The indicator lamp and a text message are displayed in the Infotainment system.

1. Take over control of the vehicle if necessary. Park Assist Plus is deactivated after an automatic braking intervention or after the end of the parking procedure.

   Or: in the event of a fault, observe the text message on the Infotainment system and restart Park Assist Plus.

2. If the issue persists, go to a suitably qualified workshop. Volkswagen recommends using an authorised Volkswagen repairer.

Park Assist Plus parks inaccurately after a wheel change

If Park Assist Plus does not park correctly after a wheel change (e.g. vehicle is too far away or too close to the kerb), the system may have to first adopt the new wheel circumferences.

1. Drive a longer distance with the vehicle, including curves.

   Park Assist Plus automatically learns the new wheel circumferences after an ignition change.

Introduction to the topic

Park Assist Plus with memory function provides assistance when parking in frequently used parking spaces, such as garages and driveways. The vehicle manoeuvres automatically on a previously stored route to the parking space.

Function

Park Assist Plus with memory function is an extension of Park Assist Plus.

The parking system uses the front camera to detect the surrounding area and stores the path into the parking space, with a maximum distance of about 50 m (about 164 ft). Once the parking procedure has been stored in the Infotainment system, the vehicle can drive the route to or from the parking space automatically.

The driver must always monitor the area around the vehicle →⚠.

An automatic braking intervention can occur if there are obstacles in the vehicle's path or if a hazardous situation occurs *(→ Automatic braking intervention)*.

Automatic, hands-free parking with Park Assist Plus with memory function may be prohibited or restricted in some regions. Only use Park Assist Plus with memory function if this is permitted by the legal requirements.

Prerequisites

✓ GPS coordinates are available for the vehicle position.

✓ Sufficient space to manoeuvre. The vehicle may first drive a few metres to the programmed path.

Driving with a bicycle carrier

Park Assist Plus with memory function cannot be activated if a bicycle carrier is electrically connected to the factory-fitted bicycle carrier preparation.

WARNING

Park Assist Plus with memory function cannot replace the driver's full attention and works exclusively within the system limits. Park Assist Plus with memory function cannot detect all driving situations and may not react at all, react too late or react undesirably. If you do not pay due attention, there is a risk of accidents and serious or even fatal injuries.

- Always pay due attention and do not rely exclusively on the system. The driver is always responsible for all driving tasks.
- Use the foot brake to slow the vehicle in a hazardous situation.
- Only park the vehicle if you hold a valid driving licence.
- Observe the road traffic regulations of the respective country.
- Do not leave the driver seat during the parking manoeuvre.
- Do not use Park Assist with memory function for parking spaces without structural boundaries, e.g. close to the edge of bodies of water or close to slopes without any structural separation.

WARNING

The system can respond only to a limited extent to quickly changing external conditions. This can result in collisions with other road users and can lead to vehicle damage as well as serious or fatal injuries.

- Do not use the parking system in fast-moving traffic.
- Always observe at least one vehicle length from junctions.
- Do not perform a parking procedure when facing oncoming traffic or across several lanes.

WARNING

The vehicle can swing out or move into the path of oncoming traffic during the automatic parking procedure. This can result in accidents with vehicle damage and serious or fatal injuries.

- Pay careful attention to the parking procedure and the traffic around you and brake the vehicle if necessary.

WARNING

In slippery conditions, the parking procedure cannot be carried out correctly and the vehicle may begin to slide. This can lead to accidents with vehicle damage and to serious injuries.

- Do not use Park Assist Plus with memory function when parking on slippery or frozen roads.

Park Assist Plus may not be available in some regions of a country for technical reasons.

— Observe the display on the Infotainment system.

Programming the parking procedure

Finding a suitable parking space

✓ The parking space is clearly visible and unobstructed →.

✓ Visibility is good, meaning no heavy rain, mist, snow or darkness.

NOTICE

If there is not sufficient distance to kerbs or other obstacles in the parking area, the vehicle may be damaged during the parking process.

- Carry out the parking procedure again if Park Distance Control indicates an obstacle with a continuous tone.

Programming the procedure for driving into a parking space

1. Drive to the selected parking space as usual.
2. Park the vehicle safely.
3. Store the parking procedure as a parking space in the Infotainment system (variant 1 or 2).

Variant 1: saving the parking procedure for driving into a space in the Park Assist Plus with memory function menu

1. Tap the P function button on the Infotainment system.
2. Tap for Park Assist Plus.
3. Tap for Park Assist Plus with memory function.
4. Tap .
5. Choose the function button then assign the desired symbol and confirm.

   The parking procedure is saved as a new parking space.

Variant 2: saving the parking procedure for driving into a space in the vehicle's exit menu

When leaving the vehicle, the Exit menu is displayed in the Infotainment system.

1. Tap Save parking procedure.

More information about programming the parking procedure for driving into a space:

— park as smoothly as possible.

— Avoid corrections to the vehicle path on the last few metres to the parking space.

— Do not turn the steering wheel to full lock or too quickly or change direction too often.

To use a name in the Infotainment system instead of the GPS coordinates, edit the stored parking space in the parking system menu.

Programming the procedure for driving out of a parking space

✓ The vehicle is in a parking space for which a procedure for driving into a parking space is stored and available in the Infotainment system.

1. Switch on ignition and activate the vehicle's drive system.
2. Tap the P function button on the Infotainment system.
3. Tap P for Park Assist Plus with memory function.
4. Select the stored parking space (driving into a parking space).

   A text message appears on the Infotainment system.
5. Drive out of the parking space.
6. Confirm the end of the procedure for driving out of the parking space with the function button in the Infotainment system.

   The procedure for driving out of the parking space is also stored for the current parking space in the menu.

The programming operation is cancelled automatically if the speed is too high or if the distance covered exceeds more than around 25 m (around 82 ft).

Reprogramming the parking procedure

If you want to reprogram the parking procedure, e.g. to improve the parking result or to drive into the parking space from a different direction of travel, first delete the stored parking space from the menu.

The procedures for driving into and out of the parking space are always deleted.

Stored parking spaces

Opening the menu

Up to five stored parking procedures can be stored as favourites in the menu for Park Assist Plus with memory function.

1. Tap the P function button on the Infotainment system.
2. Tap for Park Assist Plus with memory function.

Editing, sorting or deleting parking spaces

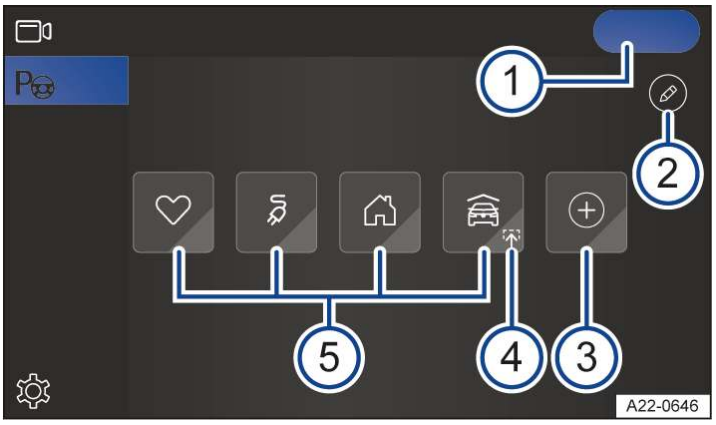

Fig. 1 Infotainment system: menu for Park Assist Plus with memory function.

1. Start parking procedure.
2. Edit stored parking spaces.
3. Add last parking procedure.
4. Parking procedure available.
5. Maximum of five stored parking spaces.

1. Tap → *Fig. 1* 2.

   You can edit all stored parking spaces.

2. To rename a parking space or assign a new symbol, tap on the parking space symbol.

   Or: to reorder the parking spaces, press and hold the function button for a parking space and move it to the new position.

   Or: to delete a parking space, tap on the parking space symbol.

   To delete all parking spaces, tap on the function button for all parking spaces.

Status of stored parking spaces

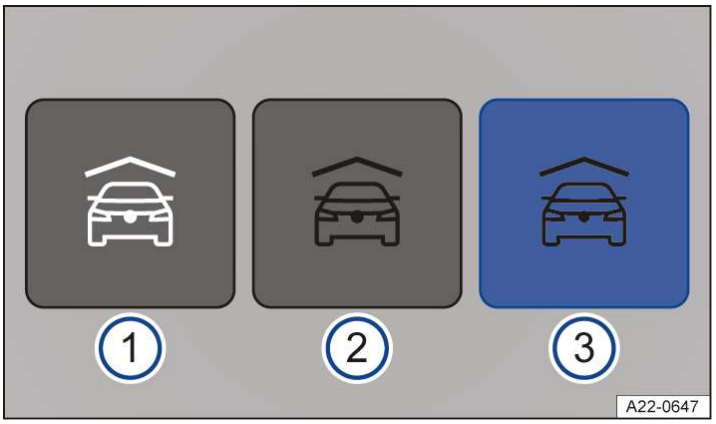

Fig. 2 Infotainment system: parking spaces without navigation.

1. Parking space not available.
2. Parking space available.
3. Automatic parking procedure selected.

Driving into a parking space

When the vehicle approaches a stored parking space, a parking manoeuvre is displayed automatically in the Infotainment system with a text message.

1. Stop the vehicle and hold it stationary with the foot brake.
2. If necessary, open the parking system menu in the Infotainment system and tap the available parking space.

   The function button is shown in blue.
3. Tap Start.

   The parking procedure for driving into a space starts →.

   The P symbol and a text message are displayed on the Infotainment system →.
4. Observe any other displays on the Infotainment system.
5. To ensure the best possible parking result, always wait until the steering wheel movements have been completed →.

   At the end of the parking manoeuvre, a text message is displayed on the Infotainment system and an acoustic signal sounds.

   The electronic parking brake is switched on.

WARNING

The steering wheel is turned quickly during manoeuvring. Reaching into the steering wheel can cause serious injuries.

- Take over steering only when the system requests you to do so.
- Take over steering in a hazardous situation.

NOTICE

The vehicle can perform steering movements and corrections during manoeuvring to the vehicle path. Damage can occur if there are obstacles in the surrounding area.

- Ensure that there is a sufficient distance to obstacles.
- Use the foot brake to brake the vehicle if necessary.

Also observe the following instructions for Park Assist Plus with memory function.

— Stop as close as possible and at most around 1 m (around 3.28 ft) away from the stored vehicle path.

— Always approach the starting position from the same direction of travel.

— If possible, do not drive into and out of parking spaces in very poor visibility conditions as there may be functional restrictions in this case, for example due to darkness or snow.

Driving into a parking space in underground car parks

In multi-storey car parks with underground parking, a parking manoeuvre is not automatically offered with a text message in the Infotainment system. The driver starts the parking procedure in the parking system menu.

1. Stop the vehicle on the correct level of the underground car park and in the immediate vicinity of the taught-in parking procedure.
2. Tap the P function button to switch to the parking system.
3. Follow the steps described above.

Driving out of a parking space

✓ The vehicle is in the target position of the stored parking manoeuvre.

✓ The symbol is displayed for the stored parking space in the Infotainment system.

1. Activate the vehicle's drive system.
2. Open the parking system menu in the Infotainment system.
3. Tap the available parking space with a stored procedure for driving out of a space.

   The function button is shown in blue.
4. Hold the vehicle with the foot brake.
5. Tap Start on the Infotainment system.

   The parking procedure for driving out of a space starts.

   The symbol and a text message are displayed on the Infotainment system →.
6. Observe any other displays on the Infotainment system.
7. To ensure the best possible parking result, always wait until the steering wheel movements have been completed →.
8. Take control of the vehicle →.

WARNING

When driving out of a parking space, there is a danger that the vehicle could drive into moving traffic. This can lead to an accident and to serious or fatal injuries.

- Drive the vehicle out of the parking space only when permitted by the traffic situation.

WARNING

The steering wheel is turned quickly during manoeuvring. Reaching into the steering wheel can cause serious injuries.

- Take over steering only when the system requests you to do so.
- Take over steering in a hazardous situation.

When drive out of a parking space, the vehicle may drive more slowly than usual over the first few metres. If there is an obstacle at the parking space it can take evasive action and deviate from the stored travel path.

Navigating to a stored parking space

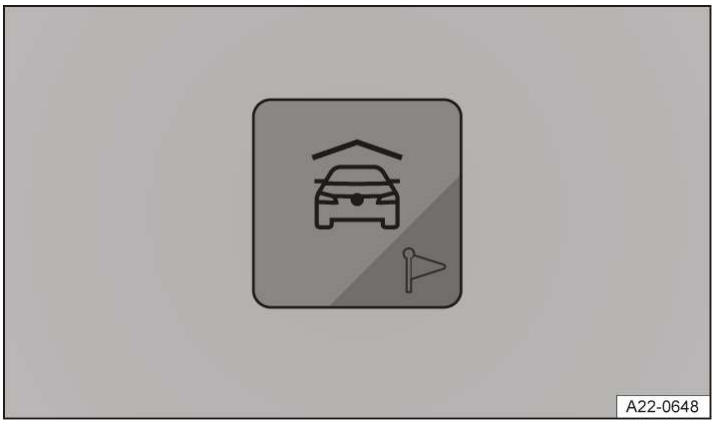

Fig. 1 Infotainment system: parking space with route guidance for the navigation system (depends on the and country).

Which parking spaces can be set as navigation destinations?

Stored parking spaces with a navigation symbol ⚐ can be transferred to the navigation system as a destination → *Fig. 1*. The function depends on the country.

Start route guidance

1. To select a destination, tap on a parking space marked with a navigation symbol ⚐ in the parking system menu on the Infotainment system.
2. Confirm the text message on the Infotainment system.

   Route guidance starts and the parking menu is closed.

   Or: follow the instructions for driving out of a parking space with the parking system.
3. When the vehicle has arrived at its destination, observe the text message in the Infotainment system.

   Park Assist Plus with memory function is ready to park the vehicle automatically.

Troubleshooting

Park Assist Plus with memory function does not detect the stored parking space or vehicle path

The vehicle may not be able to detect the area around the stored parking space.

1. Stop vehicle in immediate vicinity of the stored vehicle path.

   Or: do not use the parking system in very poor weather or lighting conditions.

   Or: clean the windscreen in the area of the front camera if necessary.

   Or: check if the vehicle is connected to the internet. The parking system always determines the vehicle's position using GPS coordinates.

Camera of Park Assist Plus with memory function deactivated

The camera for the assist systems was deactivated automatically due to a high ambient temperature or prolonged exposure to direct sunlight. When the camera is available again, Park Assist Plus with memory function will also be available once more.

1. Deactivate and reactivate the vehicle's drive system if necessary.

Introduction to the topic

The parking manoeuvre can be controlled from outside the vehicle using the mobile telephone.

Function

Park Assist Pro with remote parking capability uses the functions of Park Assist Plus and carries out part of the parking manoeuvre via the Volkswagen app on the mobile telephone.

Remote parking is also possible for a parking space of Park Assist Plus with memory function.

The driver has all vehicle keys in the proximity of the vehicle with them and operates the app on the mobile telephone. The parking system carries out steering, acceleration and braking of the vehicle →⚠.

Function button or display on the Infotainment system.

Available functions of Park Assist Pro

— Drive into suitable parallel and bay parking spaces.

— Manoeuvres from driving out of a suitable parallel or bay parking space.

In the case of a parallel parking space, the vehicle is positioned so that the driver has to drive fully out of the parking space.

Available functions of the memory function for Park Assist Pro

— Drive into a stored parking space nearby.

The driver must always monitor the area around the vehicle →⚠. An automatic braking intervention can occur if there are obstacles in the vehicle's path or if a hazardous situation occurs *(→ Automatic braking intervention)*.

Remote parking with Park Assist Pro may be prohibited or restricted in some countries or regions. Observe legal requirements.

⚠ WARNING

Park Assist Pro is not a substitute for the full attention of the driver and operates only within the limits of the system. The parking system cannot detect all driving situations and may not react at all or may react with a delay or in an undesired way. If you do not pay due attention, there is a risk of accidents and serious or even fatal injuries.

- Always pay due attention and do not rely exclusively on the system. The driver is always responsible for all driving tasks.
- Carefully observe the remote parking procedure from outside the vehicle and cancel the parking procedure in the Volkswagen app if there is a dangerous situation.
- Only park the vehicle and drive it out of parking spaces if you hold a valid driving licence.
- Observe the road traffic regulations of the respective country.
- Leave the driver seat only when the vehicle requests you to do so.
- Do not use the parking system for parking spaces without structural boundaries (e.g. close to bodies of water, watersides or slopes without any barriers).

WARNING

The system can respond only to a limited extent to quickly changing external conditions. This can result in collisions with other road users and can lead to vehicle damage as well as serious or fatal injuries.

- Do not use the parking system in fast-moving traffic.
- Always observe at least one vehicle length from junctions.
- Do not perform a parking procedure when facing oncoming traffic or across several lanes.

WARNING

The vehicle can swing out or move into the path of oncoming traffic during the automatic parking procedure. This can result in accidents with vehicle damage and serious or fatal injuries.

- Do not stand in the path of the vehicle.
- Carefully observe the parking procedure and traffic and cancel the parking procedure in the Volkswagen app if there is a dangerous situation.

WARNING

In slippery conditions, the parking procedure cannot be carried out correctly and the vehicle may begin to slide. This can lead to accidents with vehicle damage and to serious injuries.

- Do not park using parking system on icy or frozen roads.

NOTICE

The parking system may suggest parking spaces that are not suitable for the parking procedure due to the lack of boundaries or due to adjacent objects. This can result in damage to the vehicle.

- Do not park next to overhangs, e.g. loading ramps and parked trailers or under hanging objects.
- Pay close attention to the parking procedure in multi-storey car parks where the parking space is limited by pillars.

Pairing and connecting a mobile telephone

Volkswagen app for remote parking

The Volkswagen app for Park Assist Pro is available in the respective app stores.

1. Install and launch the Volkswagen app on a compatible mobile telephone → ⚠, → ⚠.

⚠ CAUTION

The remote parking function may not be carried out correctly if the mobile telephone is damaged (e.g. touchscreen damage) or if functions are restricted (e.g. delayed reactions when operating). This can result in accidents with vehicle damage and injuries.

- Use only a fully functional and compatible mobile telephone.

⚠ CAUTION

Technical manipulation by the user can interfere with the remote parking procedure. This can result in accidents with vehicle damage and injuries.

- Do not perform any modifications to the software, the mobile telephone or its operating system or the vehicle.

⚠ WARNING

There may be functional restrictions if an incompatible mobile telephone is used (e.g. delayed vehicle reaction during remote parking). Vehicle damage and serious injuries can occur as a result.

- Observe the information on compatibility in the app on your mobile telephone.

Connecting a mobile telephone to the vehicle

The mobile telephone must be paired once with the vehicle via Bluetooth®.

For further use of the Volkswagen app, the mobile device need then only be connected to the vehicle via Bluetooth®.

1. Switch on the ignition.
2. Tap the P function button on the Infotainment system.
3. Tap Settings.
4. Tap the Remote-controlled parking function button.
5. Scan the displayed QR code® with the Volkswagen app.

   The mobile telephone is paired.
6. Observe the further information in the Volkswagen app.

Cancelling pairing

Remote parking is no longer possible as soon as pairing is cancelled in the app or vehicle.

The data of all mobile telephones and the app can be removed in the Infotainment system.

1. Tap the P function button on the Infotainment system.
2. Remove the mobile telephones from the **Remote-controlled parking** menu in the Settings menu.

   All mobile telephones are removed simultaneously.

To completely cancel pairing, also remove the vehicle from the Volkswagen app.

Driving into a parking space

Prerequisites

✓ A parking manoeuvre was started with Park Assist Plus.

Or: a stored parking manoeuvre has been detected by Park Assist Plus with memory function.

✓ The Volkswagen app has been opened and the Bluetooth® connection between the vehicle and the paired mobile telephone is active.

✓ Keyless Access is activated (**Opening and closing** menu of the Infotainment system).

✓ All vehicle keys in the vicinity are with the driver.

✓ During remote parking, the mobile telephone is at a distance of no more than about 4 m (about 13 ft) → ⚠.

Driving into a parking space

1. Hold the vehicle with the brake pedal.
2. Tap the function button for remote parking in the parking system menu.

   The symbol lights up white.
3. Get out of the vehicle swiftly.
4. Check the driving path and start the parking procedure with the Volkswagen app → ⚠.

   When the parking procedure has been completed, a text message will be displayed in the Volkswagen app.

   The electronic parking brake is switched on in the vehicle and the vehicle's drive system is deactivated.

⚠ WARNING

The parking procedure may be aborted if the driver is located too far away from the vehicle. This can lead to accidents and serious injuries.

- Stay in a safe and suitable position in the vicinity of the vehicle.

Driving out of a parking space

Driving out of a parking space

This function is available only for Park Assist Pro without memory function.

1. Open the Volkswagen app.
2. Activate the vehicle's drive system with the Volkswagen app.
3. Select the desired procedure for driving out of the parking space.
4. Check the driving path and start the exiting procedure with the Volkswagen app →⚠.
5. When the procedure for driving out of the parking space has been completed, take over control of the vehicle to continue driving and observe the text messages on the Infotainment system →⚠.

⚠ WARNING

When driving out of a parking space, there is a danger that the vehicle could drive into moving traffic. This can lead to an accident and to serious or fatal injuries.

- Drive the vehicle out of the parking space only when permitted by the traffic situation.

⚠ WARNING

The parking procedure may be aborted if the driver is located too far away from the vehicle. This can lead to accidents and serious injuries.

- Stay in a safe and suitable position in the vicinity of the vehicle.

Interrupting a parking procedure prematurely and taking over control of the vehicle

It is possible to interrupt an active parking procedure at any time and take over control of the vehicle to continue driving.

1. Release the function button in the Volkswagen app.
2. Get into the vehicle.
3. Press the brake pedal and select a gear selector position.

Troubleshooting

Bluetooth® connection of Park Assist Pro with remote parking capability is lost

The parking procedure was started on the mobile telephone and is interrupted suddenly, e.g. when a phone call is received.

— The parking procedure can be continued within one minute at the same position by restarting the app.

— In the event of a longer interruption, the vehicle's drive system is deactivated and the electronic parking brake is switched on.

Rear Traffic Alert

Rear Traffic Alert monitors crossing traffic at the rear when reversing out of a parking space or manoeuvring.

Function

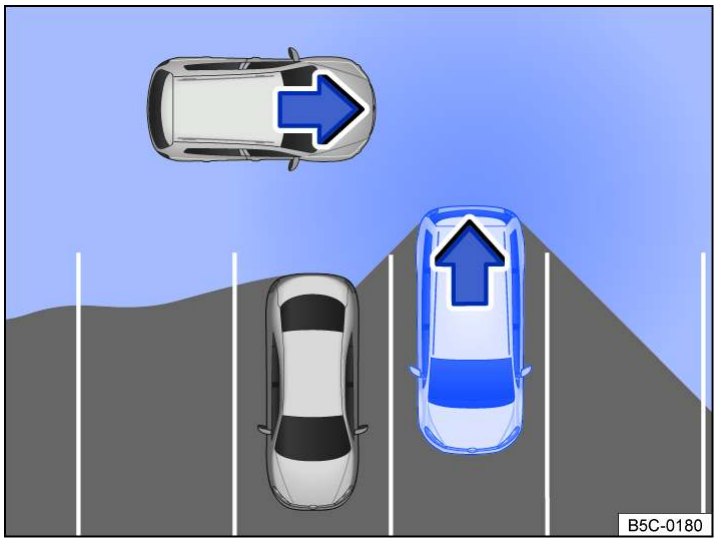

Fig. 1 Monitored area around the vehicle leaving the parking space (illustration).

Radar sensors behind the rear bumper cover monitor the rear and side areas of the vehicle.

The system detects approaching moving objects and warns the driver about the obstacle → *Fig. 2*, → ⚠. A warning signal is issued and the obstacle area is shown in colour in the Infotainment system → *Fig. 2*.

An automatic braking intervention can take place if the driver does not react *(→ Automatic braking intervention)*.

⚠ WARNING

Rear Traffic Alert is not a substitute for the full attention of the driver and operates only within the limits of the system. For stationary, slow-moving or very fast approaching objects, the system may not react or may not react in time. If you do not pay due attention, there is a risk of accidents and serious or even fatal injuries.

- Always pay due attention and do not rely exclusively on the system. The driver is always responsible for all driving tasks.
- Pay attention to the traffic situation and the area around the vehicle when driving out of a parking space.
- React promptly to the visual and acoustic warnings of Rear Traffic Alert.

Switching on and off

1. Tap the [P] function button on the Infotainment system.
2. Tap the [⚙ Settings] function button.
3. Switch Rear Traffic Alert on or off.

Rear Traffic Alert can also be switched on and off in the vehicle settings *(→ Vehicle settings menu)*.

Depending on country, Rear Traffic Alert is always switched on when the ignition is switched on.

ℹ Depending on country, this setting can be saved in the user accounts of the personalisation function and can therefore change automatically when the user account is changed.

Display

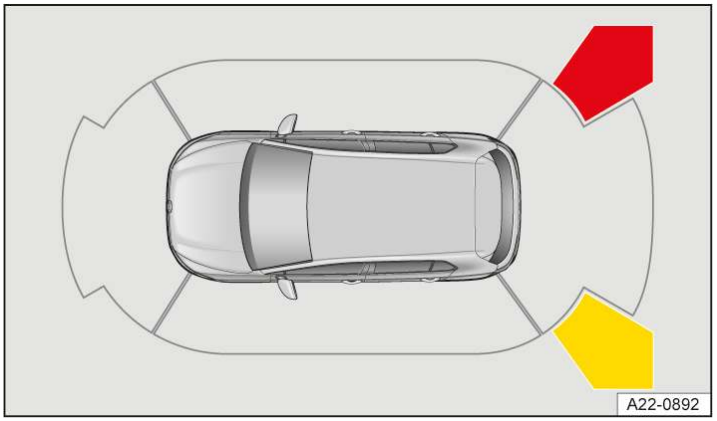

Fig. 2 Infotainment system: Rear Traffic Alert display (illustration).

Red image segment: close obstacle. The vehicle is at risk. Drive carefully out of the parking space and brake if necessary.

Yellow image segment: other road users in the vicinity of the vehicle.

Setting the volume

The volume of the warning signal can be adjusted via the rear volume setting of Park Distance Control.

1. Tap the P function button on the Infotainment system.
2. Tap Settings.
3. Tap Park Distance Control settings.
4. Adjust value for **Rear volume**.

Driving with a bicycle carrier

Rear Traffic Alert is deactivated if a bicycle carrier is electrically connected to the factory-fitted bicycle carrier preparation.

Introduction to the topic

WARNING

Loose objects may be flung through the vehicle interior in the event of a sudden driving or braking manoeuvre. This can lead to loss of control over the vehicle and cause accidents and serious or fatal injuries.

- Stow objects only in closed stowage compartments.
- Always keep stowage compartments closed while the vehicle is in motion.
- Do not place mobile devices or similar objects in the stowage system of the rear centre armrest while the vehicle is in motion.
- The coat hooks in the vehicle should only be used for lightweight clothing weighing max. 2.5 kg (approx. 5.5 lbs).
- Never leave any heavy, hard or sharp objects in the pockets of clothing.

WARNING

Incorrect use of the drink holders can cause injury. While driving, in the event of a sudden braking manoeuvre or in the event of an accident, objects located in the drink holder can be flung about the vehicle and hot drinks spilled. This can cause serious injuries and serious scalding.

- Place only soft, break-proof and closed containers in the drink holder.
- Integrated stowage systems in the rear centre armrest must always be used in the locked end positions.
- Never place hot drinks in a drink holder.
- Make sure that only drinks of the appropriate size are placed in the drink holder. Drinks must always be stored securely in the drink holder.

WARNING

If the glove box is open while driving, objects could be flung through the vehicle interior. This can lead to loss of control over the vehicle and cause accidents and serious or fatal injuries.

- Always keep the glove box closed while the vehicle is in motion.

WARNING

Any lighters in the vehicle could be damaged or lit without being noticed, for example by high surface temperatures. This could lead to serious burns and other injuries.

- Before closing stowage areas or compartments always make sure that there is no lighter in the way.
- Never stow lighters in stowage areas or compartments or on other surfaces in the vehicle.

WARNING

Closed drink bottles can explode in the vehicle in extreme heat or burst in extremely cold temperatures and cause serious injuries.

- Never leave closed drink bottles in an extremely hot or extremely cold vehicle for extended periods.

WARNING

Items located behind the rear seat backrest may limit the effect of the Automatic Rollover Support System and be flung through the vehicle interior. This can lead to loss of control over the vehicle and cause accidents and serious or fatal injuries.

- Never stow items on the area behind the rear seat backrest.
- There should be no objects in the deployment area of the Automatic Rollover Support System.

NOTICE

Objects kept in the vehicle could be damaged or could cause damage to the vehicle when exposed to strong sunlight or the effects of heat or cold.

- Do not stow any temperature-sensitive objects, food or medicines inside the vehicle.
- Please note that objects made of translucent materials, e.g. transparent suction pads on the windows, concentrate sunlight.

NOTICE

Depending on equipment and model, the rear centre armrest may have a stowage system. Folding in the rear centre armrest when the stowage system is open can damage the drink holder.

- Before folding in the rear centre armrest, make sure that any objects have been removed and that the integrated stowage systems are closed or folded in.

Drink holders in the rear centre armrest

Fig. 1 In the backrest of the middle seat: fold-out rear centre armrest (illustration).

Fig. 2 In the rear centre armrest: drink holder (illustration).

There is a drink holder in the rear centre armrest.

— To fold down: pull the loop on the centre armrest in the direction of the arrow → *Fig. 1*.

— To fold back: fold the centre armrest upwards in the opposite direction of the arrow and push it into the backrest as far as it will go → *Fig. 1*.

Do not use the middle seat on the rear bench seat to transport passengers when the centre armrest is folded down.

Introduction to the topic

Electrical equipment can be connected to the sockets in the vehicle.

The 12-volt socket will work only when the ignition is switched on.

WARNING

Improper use of the sockets and connected electrical accessories can cause fires and serious or fatal injuries.

- Switch off electrical devices immediately and disconnect them from the power supply if the electrical devices become too warm.
- Please note that sockets and devices connected to them can also be used when the ignition is switched off, e.g. by children in the vehicle.

NOTICE

Unsuitable, non-approved or incorrectly connected electrical devices can cause damage to the vehicle and the electronic components.

- Never connect electrical devices that supply electric power, such as solar panels or a battery charger, to the 12-volt socket to charge the 12-volt vehicle battery.
- Use only electrical devices that have been approved in accordance with current guidelines concerning electromagnetic compatibility.
- Do not use faulty devices.
- In order to avoid damage due to voltage fluctuations, always switch off any electrical devices before switching the ignition on or off and before activating the vehicle's drive system.
- Observe the operating instructions of the electrical devices.

NOTICE

The vehicle's electrical system can be damaged if the maximum power output is exceeded.

- Never connect electrical devices requiring more than the rated power to a 12-volt socket.

The 12-volt vehicle battery will be discharged if electrical devices are switched on when the vehicle's drive system is deactivated.

With some equipment levels, unshielded devices can cause interference with the Infotainment system and vehicle electronics.

Sockets in the vehicle

The maximum power of the sockets must not be exceeded. The power consumption of the external devices is specified on their type plates.

12-volt socket

Fig. 1 In the luggage compartment on the right-hand side: fold-open 12-volt socket (illustration).

The continuous power of all 12-volt sockets in the vehicle is 120 W in total *(→ Sockets)*.

The maximum power of a 12-volt socket in the vehicle is a total of 180 W when the vehicle's drive system is activated.

NOTICE

The fuse can blow as a result of extended operation of the 12-volt sockets at maximum power.

- Never use the 12-volt sockets at maximum power for longer than 10 minutes.
- Always use only one 12-volt socket with maximum power.

Charging options for mobile devices

Mobile devices can be charged in the vehicle either via the installed USB-C connections or wirelessly.

Charging via the USB-C ports

The following USB-C ports may be available in the vehicle:

Identification of a USB connection for data transfer and charging.

Identification of a USB connection suitable only for charging.

Available charging capacity

Voltages of up to 20 V are made available via the USB port. These voltages permit a charging capacity of up to 45 W.

Depending on equipment, the following charging profiles can be supported by the USB connections:

— Legacy charging (2.5 W).

— BC1.2 (7.5 W).

— USB-C charging (15 W).

— USB power delivery (up to 45 W).

The charging capacity actually tapped by the connected device depends on the following:

— Supported charging profiles.

— Charge level of the device.

— Device temperature.

— Charging cables used.

In the case of double USB ports, the charging capacity can be split between both ports.

Wireless charging function

Fig. 1 In the centre console: lining mat for the wireless charging function (illustration). The charging capacity is 5 W.

The wireless charging function is dependent on the equipment level and is not available in all countries.

The wireless charging function enables wireless energy transmission by electromagnetic induction over a short distance for Qi-capable mobile telephones.

The lining mat with shelf area for the wireless charging function is located in the area of the centre console and is designed for only one Qi-capable mobile telephone → *Fig. 1*.

In some vehicles, the lining mat has a telephone symbol which marks the centre position → *Fig. 1*.

When the air conditioning system is cooling the vehicle interior, cool air is also routed into the stowage compartment, depending on the equipment and model.

Qi standard

The Qi standard enables wireless charging of suitable Qi-certified mobile telephones. Consult the operating instructions for the mobile telephone to find out if it is compatible with the Qi standard. An overview of Qi-certified mobile telephones can be found at the following external link of Wireless Power Consortium, Inc.:

https://www.wirelesspowerconsortium.com/products

Volkswagen AG does not assume any liability for the completeness and correctness of this list. The manufacturer of the mobile telephone can provide further information on compatibility, if necessary.

There may be charging restrictions with mobile telephones that are not Qi-certified.

The Qi symbol ϕ is displayed on the Infotainment system to indicate the wireless charging status.

Charging a mobile telephone wirelessly

Prerequisite

✓ The optimum operating temperature in the vehicle for wireless charging is between -40°C and +35°C (around -40°F to +95°F).

✓ A suitable mobile telephone that is not larger than the marked shelf area and is Qi-certified.

1. Remove any foreign objects from the stowage compartment before charging → ⚠.
2. After removing the protective cover and any other foreign material, place the mobile telephone in the centre of the shelf area with the display facing upwards and so that its entire surface is flat on the area.

   The charging process starts automatically.
3. Follow the operating instructions for the mobile telephone.

The Infotainment system will provide information about the start of the charging operation and, where applicable, about any foreign objects with metallic components that are detected in the stowage compartment.

Depending on equipment, the charging function can be deactivated manually in the Infotainment system.

If the ambient temperature in the vehicle is outside the temperature range of -40°C to +35°C (around -40°F to +95°F), the charging process may be interrupted or the charging time extended.

Wireless charging will function normally again as soon as the ambient temperature in the vehicle is within the temperature range.

Meaning of the Qi symbols

The number of Qi symbols displayed in the Infotainment system varies depending on the equipment and model.

The white Qi symbol with the On/Off switch indicates that wireless charging is switched off.

The white Qi symbol indicates that the mobile telephone is being charged.

The red Qi symbol indicates that wireless charging is not possible.

Depending on equipment and model, it is possible to tap the Qi symbol for explanations on the status and to switch on wireless charging if necessary.

Stowage compartment cover

Fig. 2 In the centre console: closed cover of the stowage compartment (illustration).

The stowage compartment for the wireless charging function has a cover.

The cover can avoid distractions caused by the mobile telephone, such as incoming messages.

1. Place the mobile telephone in the stowage compartment.
2. Keep the cover closed when driving so that the mobile telephone display is fully covered →⚠.

⚠ WARNING

Notifications on the mobile telephone display can distract the driver. This can lead to an accident and cause serious or fatal injuries.
- Drive with your full attention and with responsibility.
- Never operate the mobile telephone while the vehicle is in motion.

⚠ WARNING

Loose objects in the stowage compartment may be flung through the vehicle interior in the event of a sudden driving or braking manoeuvre. This can lead to an accident and cause serious or fatal injuries.
- Make sure that no objects impede the closing function of the cover.
- Always keep the cover closed while the vehicle is in motion.

⚠ WARNING

Metallic objects on the shelf can become very hot. This can cause burns or fires.
- Do not place any metal or metallic objects on the shelf for the wireless charging function.
- Remove any foreign objects immediately.

NOTICE

If cards or objects with a magnetic stripe or chip are placed on the shelf for the wireless charging function, this may damage the data stored on them.

- Do not place any ID, bank and credit cards etc. with a magnetic stripe or chip on the shelf for the wireless charging function.

The mobile telephone can become hot during wireless charging. Depending on the equipment and model, some lining mats have ventilation grooves. Keep the ventilation grooves clean as they improve the airflow around the mobile telephone → *Fig. 1*.

Troubleshooting

Mobile telephone is not charged

A message about a foreign object in the stowage compartment may be displayed on the Infotainment system.

An unfavourable position of the mobile telephone on the lining mat can impair the charging function. This can already be the case in the event of small changes in position, e.g. due to vibrations.

The position of the mobile telephone must be corrected to re-establish the correct charging function.

1. Align the mobile telephone centrally on the shelf.

The charging function can also be impaired by metal and above all magnetic parts of a mobile telephone or its protective cover.

1. Turn the mobile telephone by around 180° and align on the shelf with the display still facing upwards.

If cards or objects with a magnetic stripe or chip are placed on the lining mat for the wireless charging function, this may damage the data stored on them.

Depending on model, an error message with the red Qi symbol may be displayed on the Infotainment system. It is then not possible to use the wireless charging function.

1. Remove ID cards, bank cards and credit cards with magnetic stripe or chip from the lining mat. The error message closes automatically.

   You can then charge the mobile telephone again using the wireless charging function.

If the mobile telephone becomes too hot on the mat, it may switch off for safety reasons. It is then not possible to use the wireless charging function.

1. Remove the mobile telephone from the mat and allow it to cool down in another stowage compartment. You can then charge it again using the wireless charging function.

Cybersecurity

Cybersecurity comprises measures to reduce the risk of unauthorised access by malware or an internet attack on vehicle functions, data and control units. Connectivity components in particular are subject to the risk of unauthorised access or internet attacks.

Connectivity components are control units for data transmission, interfaces, media and diagnostic connections via which information and data can be exchanged between the vehicle and mobile devices or the internet.

Connectivity components are equipped with security mechanisms that minimise the risk of unauthorised access to vehicle systems.

The connectivity components include the following in particular:

— Diagnostic port.

— Control unit with eSIM card.

— Mobile phone interface.

— App-Connect.

— Wi-Fi® hotspot.

— NFC radio technology.

— Bluetooth® interface.

— USB port.

— SD card slot.

The type and number of connectivity components present in your vehicle depend on the equipment and country.

Software and security mechanisms

The software and security mechanisms in the vehicle are subject to ongoing development. Like with computers or the operating systems of mobile telephones, the software and security mechanisms in the vehicle may also be updated at irregular intervals.

Updates improve the security, stability and running speeds of the vehicle systems. An update is a preventive measure to optimise functionality and protect against malware, for example.

The software of vehicle control units is updated with an update.

There are two options for updating your vehicle, depending on vehicle and country:

— Updates by a suitably qualified workshop. Volkswagen recommends using an authorised Volkswagen repairer.

— Update via an over-the-air update.

WARNING

Malware can access data and information that is stored in control units, in the Infotainment system and on connected or paired mobile devices. In spite of integrated security mechanisms and regularly performed over-the-air updates, malware can still damage or cause malfunctions of the control units and vehicle. Damage to and malfunctions of the control units and vehicle can also occur if you connect mobile devices to the vehicle that are infected with malware. The damage may mean complete loss of the data, and malfunctions can lead to serious accidents and fatal injuries.

- If the vehicle functions or reacts differently than normal, reduce speed in a controlled manner and contact a suitably qualified workshop. Volkswagen recommends using an authorised Volkswagen repairer.
- After updates are made available, carry them out as quickly as possible or have them installed by a suitably qualified workshop. Volkswagen recommends using an authorised Volkswagen repairer.
- Protect mobile devices by means of a suitable anti-virus program and generally known precautionary measures. Regularly update the appropriate anti-virus program with the updates from the respective provider.

Minimising risks

You too can reduce the risk of unauthorised access to vehicle systems and functions:

— Do not use data media, Bluetooth devices and mobile telephones in the vehicle that contain manipulated data or malware.

— Have updates installed by a suitably qualified workshop as soon as possible after they are made available. Volkswagen recommends using an authorised Volkswagen repairer. Depending on vehicle and country, if you have the option to perform over-the-air updates, request download of the update and install the update as soon as the download has been completed. If the driver repeatedly rejects an over-the-air update, it is then necessary to visit a suitably qualified workshop. Volkswagen recommends using an authorised Volkswagen repairer.

— Have the vehicle serviced, repaired and maintained only by a suitably qualified workshop. Volkswagen recommends using an authorised Volkswagen repairer.

Introduction to the topic

Over-the-air updates keep the software of your vehicle up to date, e.g. in order to optimise the vehicle functions and for protection against malware.

Over-the-air updates and app updates

Depending on equipment, two types of updates are offered to you in your vehicle: over-the-air updates and app updates.

The over-the-air updates are comprehensive updates and update the vehicle's entire control software. App updates update the apps available in the vehicle.

Further information on app updates *(→ In-Car Shop)*.

How can you recognise that an over-the-air update is available?

As soon as an over-the-air update is available, this is displayed in the Infotainment system.

If several over-the-air updates are available for the vehicle at the same time, one over-the-air update must first be completed successfully before the next over-the-air update can be started.

In your own interest, over-the-air updates should be carried out as soon as possible. If the driver repeatedly rejects the over-the-air update, it is then necessary to visit a suitably qualified workshop. Volkswagen recommends using an authorised Volkswagen repairer.

WARNING

It is possible in very rare cases that a control unit will not function properly after an over-the-air update. Malfunctions of a control unit and the vehicle can lead to serious accidents and fatal injuries.

- Reduce speed in a controlled manner if the vehicle functions or reacts differently than usual when driving.
- Please contact a suitably qualified workshop. Volkswagen recommends using an authorised Volkswagen repairer.

WARNING

If the instrument cluster does not function after an over-the-air update, no instruments, warning lamps, symbols or text messages can be displayed. Driving with an instrument cluster that is not working can cause serious accidents and fatal injuries.

- Do not use the vehicle. Contact Volkswagen Customer Care.

NOTICE

If special modifications have been performed on vehicles that are outside the scope of responsibility of Volkswagen AG, e.g. for emergency services vehicles or taxis, there is a risk that the special functions, e.g. taximeter, will no longer function correctly after an over-the-air update.

- Consult your authorised Volkswagen repairer before you carry out an over-the-air update.

A measure to increase performance or efficiency (e.g. engine tuning) that has not been performed by Volkswagen may be deleted by an over-the-air update.

Depending on equipment and in some countries, release notes may be displayed once on the Infotainment system before or after an over-the-air update. These notes describe the changes to the vehicle status.

Refer to the following website for the release notes and further information on the over-the-air updates:

softwareupdates.volkswagen.com

The over-the-air update does not update any apps or, if present depending on equipment, any functions or apps purchased via the In-Car Shop.

Prerequisites for an over-the-air update.

The following prerequisites must be met so that an over-the-air update can be downloaded and so that you can perform software installation of the over-the-air update:

✓ The over-the-air update function is offered in your country.

✓ The vehicle is in an area with sufficient mobile reception.

✓ Your current privacy settings allow data and information to be transmitted and received *(→ Privacy settings)*.

✓ The 12-volt vehicle battery is appropriately charged.

If the charge level is too low, installation cannot be started. Volkswagen recommends a charge level of at least 50% for the over-the-air update.

Downloading and installing an over-the-air update

Download costs

Download of over-the-air updates takes place via the factory-fitted control unit with eSIM card and is free of charge. Volkswagen pays the connection costs.

Time of download

Download takes place automatically without any previous notification and is also possible when driving. As soon as download has been completed, a message will be displayed to inform you that an over-the-air update is available.

The duration of a download process depends on the network quality, file size and type of over-the-air update. It is possible that the download process may be interrupted. The download process will be resumed as required when the ignition is switched on.

Prerequisites for installation

— The vehicle is parked safely in accordance with legal requirements and local conditions .

— The previously provided over-the-air updates have been installed.

Installing the over-the-air update

Choose a time for the over-the-air update when the vehicle does not have to be driven by yourself or others. Note the estimated installation duration shown in the Infotainment system.

WARNING

Control units will be deactivated and will not function during installation. Driving with deactivated or malfunctioning control units can cause accidents and fatal injuries.

- Never use your vehicle during an installation procedure.

1. Park the vehicle safely in accordance with legal requirements and local conditions.
2. Deactivate the vehicle's drive system and switch on the electronic parking brake.
3. Close all windows and doors, the boot lid and – if present, depending on equipment – the glass roof.
4. Confirm installation on the Infotainment system.
5. Make sure that all vehicle occupants get out and that no animals are left behind in the vehicle.
6. Take all vehicle keys with you and get out of the vehicle.
7. Lock the vehicle.

Functional limitations during installation

Control units, the central computer, functions and displays are not available during installation. Do not use the vehicle and do not operate the Infotainment system during this time.

— Activation of the vehicle's drive system is prevented by the system.

— The high-voltage battery is not charged.

— The diagnostic connection is deactivated.

— The anti-theft alarm is deactivated.

— SAFELOCK is deactivated.

After installation

After installation and before activating the vehicle's drive system, read the message in the Infotainment system or instrument cluster about completed installation. The vehicle requires up to 1 minute to display the status of the over-the-air update.

— The vehicle's drive system can be activated after successful installation.

— If installation failed: *(→ System update)*.

Troubleshooting

Installation of an over-the-air update has failed

— If installation of an over-the-air update is unsuccessful, you will be informed about this on the Infotainment system or instrument cluster.

Control units will no longer function or will not function correctly in the event of a critical installation error. Functions and displays are not available until the error is corrected. Do not use the vehicle. In this case, contact Volkswagen Customer Care.

Can I interrupt installation of an over-the-air update?

No, this is not possible.

What happens if installation of an over-the-air update is interrupted?

If installation is interrupted, for example due to damage to the electrical system in the vehicle, it is possible that control units will be not be updated and may be damaged due to incomplete installation of the over-the-air update.

Introduction to the topic

V2X technology, referred to below as V2X, permits close-range communication between several vehicles and between vehicles and the traffic infrastructure, referred to below as “participants”.

Function of V2X

Communication between participants takes place based on manufacturer-independent V2X and Wi-Fi® standards.

Fig. 1 Communication between participants (illustration).

When V2X is switched on, data is transmitted continuously between the participants, irrespective of whether the vehicle is in online or offline mode.

Data transmission

When V2X is activated, the following data is sent and received:

— Vehicle data, e.g. speed.

— Position data.

— Event data, e.g. for accidents, in the form of a traffic hazard alert.

The use of constantly changing, temporary IDs for the V2X data minimises the risk of the transmitted data being traced back to you or misused.

Activate online mode in the vehicle at least once a month to update V2X certificates and to ensure that V2X remains activated.

For more information on data processing, see the Infotainment system .

Activating V2X

The availability of V2X depends on country and equipment. If you can activate V2X under the following path, this means that the vehicle is equipped with V2X technology.

1. In the app overview, tap ▶ ▶ **Privacy settings** or **Privacy and services.**

When V2X is switched on, data is transmitted continuously between the participants, irrespective of whether the vehicle is in online or offline mode. If the vehicle is in offline mode when V2X is activated, the following symbol is displayed on the Infotainment system:

or

Offline mode is active, V2X is sending data.

If you are in online mode, there is no separate display for V2X irrespective of whether you have activated V2X or not. If you want to check whether V2X is transmitting data in online mode, check whether V2X has been activated in the app overview ▶ under ▶**Privacy settings** or **Privacy settings and services**.

Limits of V2X

Data exchange

V2X in your vehicle communicates only with participants that are equipped with functional and compatible V2X technology.

Participants with deactivated, faulty or incompatible V2X are not detected.

Range

Depending on the weather and surroundings, V2X participants can communicate in a near range of up to around 800 m (around 2,625 ft). Not all of the functions based on V2X make full use of the possible range.

Function limitations

Functioning of V2X may be restricted in the following cases:

— The environmental conditions may prevent data reaching the participant.

— Trailer operation prevents data reaching the participant.

— Vehicle add-on parts prevent data reaching the participant.

— The event is not detected as such by participants.

Activating and deactivating V2X

When you log in as a user in the vehicle for the first time, check whether the V2X setting meets your requirements and deactivate V2X manually if necessary.

Activating V2X

1. In the app overview, tap ▶ ▶ **Privacy settings and services** or **Privacy settings**.
2. Activate **V2X**.

WARNING

When V2X is activated, the limits for electromagnetic radiation could be exceeded outside the vehicle. Increased limits for electromagnetic radiation can pose a health risk for persons with active medical implants, such as pacemakers.

V2X aerials are located on the vehicle roof and in some cases in the mirror triangle of the windscreen.

- Keep a distance of 20 cm (approx. 8 in) from the activated V2X aerial outside the vehicle.
- Deactivate V2X if you suspect adverse effects on an active medical implant (e.g. pacemaker) or other medical device.

Deactivating V2X manually

1. In the app overview, tap ▶ ▶ **Privacy settings and services** or **Privacy settings**.
2. Deactivate **V2X**.

Automatic deactivation of V2X

V2X can deactivate itself automatically in some cases *(→ V2X technology)*.

V2X is activated again when the reason for automatic deactivation has been remedied.

1. To check the activation status of V2X, go to the app overview and tap ▶ ▶ **Privacy settings and services** or **Privacy settings**.

Troubleshooting

V2X deactivates itself automatically

— V2X is not permitted in the country in which the vehicle is currently being driven.

— The vehicle was offline too long so that certificates were not updated.

Adapt the privacy settings so that an online connection is established in order to allow the certificates to be updated.

— System fault.

Please contact a suitably qualified workshop. Volkswagen recommends using an authorised Volkswagen repairer.

No V2X data is displayed

— Functioning of V2X is restricted.

— There are no participants transmitting data in the vicinity.

— There are transmitting participants in the vicinity, but they are not relevant for your vehicle.

— V2X aerials are blocked by add-on parts or covers.

Keep the areas around V2X aerials clear.

— Data exchange between participants is impaired or not possible due to the weather conditions.

— There is already a driver reaction to the hazard ahead.

Traffic hazard alert

The traffic hazard alert function uses V2X technology and warns about nearby traffic hazards based on the current situation. This can prevent accidents and improve traffic flow.

Depending on the type of traffic hazard, the driving speed and the degree of vehicle deceleration, a warning about a relevant traffic hazard is provided as follows:

— Acoustic warning.

— Text message with symbol on the digital instrument cluster.

WARNING

The traffic hazard alert function is not a substitute for the full attention of the driver and operates only within the system limits of V2X. The traffic hazard alert function cannot recognise all dangerous situations and may not issue a warning or may issue a warning with a delay. If you rely exclusively on the traffic hazard alert function, there is a risk of accidents and serious injuries or even death.

- Always drive with due care and attention and with an anticipatory driving style and be ready to intervene at all times.
- Observe the system limits *(→ V2X technology)*.
- Always adapt your driving style to the current visibility, weather and road/traffic conditions.

WARNING

Failure to observe traffic hazard alerts can lead to serious accidents and fatal injuries.

- Never ignore traffic hazard alerts.

Symbols for critical hazards

Red symbols warn about critical hazards.

Accident ahead.

Emergency vehicle on active call.

End of traffic jam ahead.

Intervention of an assist system in a vehicle ahead, such as Automatic Emergency Braking.

Wrong-way driver on the road.

Restricted visibility.

Symbols of the information level

Yellow symbols warn when a traffic hazard is detected.

- Accident ahead.
- Emergency vehicle on active call. This symbol is supplemented by a symbol that indicates the direction from which the emergency service vehicle is approaching.
- Direction from which emergency service vehicle is approaching, e.g. from the rear.
- End of traffic jam ahead.
- Stationary car or breakdown ahead.
- Road works ahead.
- Persons on the road.
- Animals on the road.
- Obstacles on the road.
- Slow vehicle ahead.
- Restricted visibility.
- Strong winds.
- Slippery road.

Adjustment options for traffic hazard alert

Switching the traffic hazard alert on and off

You can switch the traffic hazard alerts on and off in the Assist systems menu in the Infotainment system.

1. In the app overview, activate or deactivate **Driver assist settings** ▶ **Traffic hazard alert**.

   Or: in the app overview, activate or deactivate **Driver assist settings** ▶ **Traffic hazard alert** ▶ **Active**.

Switching traffic hazard alerts with information level on and off

You can adjust the settings so that you receive warnings only about critical hazards. For this, you must switch off the traffic hazard alerts with information level status.

1. In the app overview, activate or deactivate **Driver assist settings** ▶ **Traffic hazard alert** ▶ **Information level**.

Hiding a displayed traffic hazard alert

1. Press OK on the multifunction steering wheel.

Introduction to the topic

Mobile devices can be connected to the Infotainment system by cable and wireless connections present in the vehicle.

The type and number of cable and wireless connections depend on the vehicle equipment.

In the case of cable connections, use only the original device connecting cables or, if available, the factory-supplied connecting cables for your vehicle.

If the plug on the connecting cable cannot be inserted, check the angle of insertion and the connections.

NOTICE

If unsuitable or damaged connecting cables are used or if the connecting cable connector is inserted with strong pressure or in the wrong position, this can lead to malfunctions and damage to the device, e.g. the device connection and the connecting cable connector may be damaged.

- Use only suitable and undamaged connecting cables.
- When inserting the plugs of the connecting cables into the appropriate connection, ensure that they are correctly positioned and apply only light pressure.
- Make sure that the connecting cable is not trapped or sharply bent.

If a connected device is not recognised, disconnect all devices and connect the device again. If necessary, check that the connecting cable you are using is working properly.

If a connected device malfunctions, restart the device. In some cases this will remedy the fault.

USB connection

The USB port allows data transfer and device charging or only device charging.

USB-C port

Fig. 1 USB-C port in the vehicle (illustration).

The following USB-C ports may be available in the vehicle:

Identification of a USB connection for data transfer and charging.

Identification of a USB connection suitable only for charging.

Information on charging options and charging capacity is provided in this owner's manual *(→ Charging options for mobile devices)*.

Possible fitting locations of USB connections

The number and fitting locations of USB connections depend on the equipment and the connections are not available in all countries.

— In the centre console.

— In front of the roof console.

— On the interior mirror base.

— In the centre console stowage compartment.

— In the compartment under the centre armrest.

— In the armrest of the third seat row.

— Two USB connections on the rear of the centre console for the second seat row.

USB ports on the rear seats are equipped only with a charging function.

Available data transfer functions

The following USB data transfer functions are available, depending on equipment:

— App-Connect .

— Media playback .

— Update function, e.g. for navigation data *(→ Navigation)*.

Notes and restrictions

— Use only suitable USB connecting cables. The USB connecting cable must match the USB connection installed in the vehicle.

— Dirty, overheated or damaged data media may be unusable. Observe the manufacturer's instructions.

— Differences in the quality of data media from different manufacturers can interfere with media playback.

— If USB extension cables, USB plug adapters or USB hubs are used, this can lead to faults or failure of the USB functions.

Bluetooth® interface

The Bluetooth interface is a wireless connection. In Bluetooth audio mode, audio files from a mobile device that is connected via Bluetooth, e.g. mobile telephone, can be played over the vehicle loudspeakers.

Bluetooth audio mode is available if the vehicle is equipped with a factory-fitted mobile phone interface that supports this function.

Bluetooth profiles

A maximum of three mobile devices can be connected simultaneously via Bluetooth: two for telephony and one for music playback.

The following Bluetooth functions are supported:

— Telephony and handsfree mode.

— Music playback.

— Displaying and operating music playback.

— Transmission of Cover Arts.

— Access to phone book and call lists.

— Access to Text message and email.

Prerequisites for using the Bluetooth interface for music playback

✓ The mobile device supports the Bluetooth profile Advanced Audio Distribution Profile (A2DP).

✓ Permission for audio and media transmission to the Infotainment system must be given in the settings on the mobile device.

You can find more detailed information on using a mobile device for music playback in this owner's manual .

Pairing a mobile device with the vehicle via Bluetooth

There are various ways to pair your mobile device with the vehicle via Bluetooth. The easiest way is to pair via one of the following apps: **Telephone** or **Radio/Media**.

Pairing via the **Telephone** app

---

1. Open the app overview and tap **Telephone**.
2. Follow the instructions on the Infotainment system.
3. If mobile telephones are already connected and another mobile telephone is to be connected, tap ⚙ ▶ **Select mobile telephone**.
4. Select the mobile telephone to be connected.

Pairing via the **Radio/Media** app

---

1. Open the app overview and tap **Radio/Media** ▶ **Media** ▶ **Source** ▶ **Bluetooth**.
2. Follow the instructions on the Infotainment system.
3. If **Bluetooth** is already selected under **Source** but another mobile device is to be used, tap **Source** ▶ **Bluetooth** again.

   Or: tap ⚙ ▶ **Media** ▶ **Select Bluetooth audio device**.

If pairing via the **Telephone** or **Radio/Media** app should fail, pairing can also be performed in the menu ⚙ ▶ **Network** ▶ **Mobile devices**.

Pairing via the **Mobile devices** menu

1. In the app overview, tap ⚙ ▶ **Network** ▶ **Mobile devices**.
2. In the factory settings, both Bluetooth and visibility are always activated. If Bluetooth is disabled, tap ⚙ and activate **Bluetooth** and **Visibility**.
3. Open the list of available Bluetooth devices on the mobile device and select the Bluetooth device name of the Infotainment system. In the factory settings, the Bluetooth® device name of the Infotainment system is “my VW” and the last four digits of the VIN.
4. Observe the messages on the mobile device and Infotainment system and confirm as necessary.

   If pairing was successful, the data of the mobile device will be stored in the user profile.
5. *Optional:* confirm message for data transfer on the mobile device.

As a general rule, it is only necessary to pair a mobile device once. The mobile device connection with the Infotainment system via Bluetooth can be restored at any time without having to pair the mobile device again.

The extent to which the Infotainment system can be used to control the mobile device connected via Bluetooth depends on the respective mobile device.

You can find more detailed information on using a mobile device via a Bluetooth connection in this owner’s manual .

Always switch off the warning and service tones on a connected mobile device, e.g. key tones, to prevent interference noise and malfunctions.

Introduction to the topic

Two options are available for using the internet in the vehicle:

— Via the Wi-Fi® hotspot of a mobile device, e.g. mobile telephone.

— Via the vehicle's eSIM *(→ Wi-Fi)*.

The types of internet connections possible are dependent on the country and equipment and the Infotainment system used.

Depending on your mobile telephone tariff, using the Wi-Fi® hotspot of a mobile device may incur additional costs, e.g. roaming charges, for loading and using data packages from the internet, especially if you use these services abroad. Due to the potentially high volume of data in use, Volkswagen recommends using a mobile device tariff which includes a data flat rate. For more information contact your mobile telephone provider.

If the eSIM is used, you must purchase data plans via the web shop of Volkswagen's external mobile communications partner. However, you do not need any data plans of the external mobile communications partner in order to use the mobile online services of Volkswagen AG. This requires a contract for use of the mobile online services, which may be subject to a charge.

Irrespective of how you establish the internet connection, whether via the Wi-Fi® hotspot of a mobile device or via the vehicle's eSIM, you can use the Infotainment system as a Wi-Fi® hotspot for eight further mobile devices *(→ Wi-Fi)*. This function is dependent on the equipment level and is not available in all vehicles.

Setting up an internet connection

Using the internet via the eSIM in the vehicle

In order to use an internet connection via vehicle's the eSIM, you must purchase data plans via the web shop of Volkswagen's external mobile communications partner.

The possibility of using an internet connection via the vehicle's eSIM depends on the vehicle equipment and country.

Using an internet connection via a mobile device

1. Activate tethering/Wi-Fi® hotspot on the mobile device; refer to the manufacturer's operating instructions.
2. In the app overview, tap ⚙ ▶ **Wi-Fi** ▶ **Wi-Fi:** ▶ **Search for Wi-Fi**.

   The Infotainment system searches for Wi-Fi hotspots nearby. The search process may take a few seconds. The search for available networks is started and continues until **Search for Wi-Fi** is deactivated again.
3. Select the Wi-Fi network of the desired mobile device.
4. Enter the network key of the mobile device on the Infotainment system and confirm.

   The Wi-Fi connection between the mobile device and Infotainment system is now set up. Further inputs may be required on the mobile device to complete the connection.

Due to the large number of possible mobile devices, it is not possible to guarantee fault-free operation of all functions.

The availability of the function for using the Infotainment system as a Wi-Fi hotspot is country-dependent and may vary.

The Wi-Fi connection can be set up only to protected Wi-Fi networks that support the WPA2 or WPA3 standard. Older encryption methods and open networks are not supported.

Setting up and deactivating a Wi-Fi® hotspot

Setting up a Wi-Fi hotspot

Inputs are necessary both on the Infotainment system and on the mobile device.

1. In the app overview, tap ⚙ ▶ **Network** ▶ **Wi-Fi** ▶ **Infotainment system as hotspot**.
2. To activate the Wi-Fi hotspot, tap **Use as hotspot**.
3. Find the network name of the Wi-Fi hotspot displayed on the Infotainment system on the mobile device and select.
4. Enter the password displayed on the Infotainment system on the mobile device and confirm.

   The Wi-Fi connection is set up. Further inputs may be required on the mobile device to complete the connection.
5. *Optional:* repeat the procedure to connect further mobile devices.

The network name and password are generated automatically. You can then change the network name and the password yourself.

Deactivating a Wi-Fi hotspot

1. In the app overview, tap ⚙ ▶ **Network** ▶ **Wi-Fi** ▶ **Infotainment system as hotspot**.
2. To deactivate the Wi-Fi hotspot, tap **Use as hotspot**.

Quick connection with the Infotainment system

The quick connection function makes it possible to easily and quickly set up a Wi-Fi® connection with encryption by scanning a QR Code®.

If the camera app of your mobile telephone cannot scan a QR Code®, install a suitable app for scanning a QR Code®.

1. In the app overview, tap ⚙ ▶ **Network** ▶ **Wi-Fi** ▶ **Quick connection to Infotainment system**.
2. Scan the QR Code® on the Infotainment system with the mobile device.

   The Wi-Fi connection is set up. Further inputs may be required on the mobile device to complete the connection.

Technical specifications

The technical specifications of the internet connections in the vehicle that are described here depend on the vehicle equipment and are available only in some countries.

— Internet connection via the hotspot of a mobile device or via the eSIM.

— Wi-Fi® in accordance with IEEE 802.11 a/b/g/n/ac.

— Transfer in 2.4 GHz and 5 GHz.

— Three Wi-Fi modes simultaneously:

  — Tethering (2.4 GHz or 5 GHz).

  — 2.4 GHz access point.

  — 5 GHz access point.

— Wi-Fi aerial.

  — One multiband aerial each for 2.4 GHz and 5 GHz.

— Wi-Fi hotspot for up to eight mobile devices simultaneously.

— Apple CarPlay® via Wi-Fi.

— Android Auto® via Wi-Fi.

— Simplified pairing process via QR Code®.

As default, the Wi-Fi connection is encrypted using WPA2 encryption for security reasons. Volkswagen recommends always using WPA2 encryption. Observe country-specific requirements.

Introduction to mobile online services

Mobile online services, referred to below as online services, allow you to connect your vehicle to the internet. This allows you to extend the scope of various vehicle functions with online functionalities, e.g. receive real-time data for navigation. The general availability of online services is country-dependent. You can find out whether online services are offered in your country from your authorised Volkswagen repairer. A description of all available online services and further information on registration and help can be found on the internet at:

https://connect.volkswagen.com

You can find the myVolkswagen customer area on the internet at:

https://www.myvolkswagen.net/start/en.html

Online services can be activated only after concluding a contract with Volkswagen AG for use of the online services, whereby this may be subject to a charge. Mobile online services are subject to a country-dependent restriction of the contract term.

The provision and availability of mobile online services can vary from country to country and depend on the vehicle and vehicle equipment. For further information, refer to the Terms and Conditions for the mobile online services.

In areas with insufficient mobile phone and GPS reception, no emergency calls and phone calls can be made and no data can be transmitted.

Observe the warnings .

Volkswagen is not responsible for damage to the vehicle caused by poor-quality or faulty third-party apps, inadequate programming of third-party apps, insufficient network strength, data loss, misuse of mobile devices, or malware on data media, computers, tablets and mobile telephones.

Only download apps from secure sources, e.g. from the Volkswagen website, and only use the official Volkswagen app.

An overview of your activated online services and their contract terms is available in your Volkswagen ID user account.

Execution of mobile online services using the app can consume data and cause costs. The transmission speed will be reduced if the contractually agreed data volume is exceeded, and this can cause delays in execution of the mobile online services.

Registering for mobile online services

To use the mobile online services in the vehicle, you must carry out the following steps:

1. Create a Volkswagen ID user account via myVolkswagen or in the Volkswagen app *(→ Volkswagen ID)*.
2. Become the primary user *(→ Manage users)* and carry out the Volkswagen Ident process if necessary in order to use security-relevant online services *(→ Volkswagen Ident process)*.
3. If necessary, create additional users *(→ Manage users)*.

Data processing

Valid in EU countries where the General Data Protection Regulation of the European Union is effective:

When using the mobile online services, information about the vehicle is transmitted and processed online. This data can also indirectly provide information about the respective driver, e.g. about driving behaviour. You can find the Privacy Policy for use of the Volkswagen mobile online services in the app overview in the Infotainment system under **Legal information**.

Restricting data transmission

Communication of your vehicle with the Volkswagen data server and processing of vehicle and personal data can be restricted directly via the Infotainment system *(→ Privacy settings)*.

Permanent transfer of the vehicle

If the vehicle has been purchased as a used vehicle or handed over to you by another person for permanent use, mobile online services may already be activated and the previous user may still have the possibility to view collected data and control certain vehicle functions via mobile online services.

In the Infotainment system you can see whether a person is assigned to your vehicle as the primary user. In this case, you must first reset the Infotainment system to the factory settings and then register yourself as the primary user for the vehicle.

Prerequisites for using the online services

In order to be able to use the full scope of the mobile online services, the following prerequisites must be met:

✓ The hardware for use of the online services was also ordered for the vehicle and has been installed at the factory.

✓ The vehicle and user are located in the area covered by the services.

✓ Data transmission is possible without restrictions at the location of the user and vehicle.

✓ The mobile device is compatible with the app.

✓ The privacy settings in the Infotainment system allow data transmission.

✓ The settings in the mobile device allow data transmission for the mobile online services.

✓ A personal Volkswagen ID user account has been set up *(→ Volkswagen ID)*.

✓ There is a valid contract with Volkswagen AG for use of the online services.

✓ A vehicle has been added to the Volkswagen ID user account *(→ Virtual vehicle)*.

✓ Neither the online connectivity unit nor individual online services are deactivated or decommissioned.

⚠ WARNING

Using apps, online services and functions while the vehicle is in motion can distract you from the road. Serious accidents and fatal injuries can occur if the driver is distracted.

- Drive with your full attention and with responsibility.
- Only operate the instrument cluster and the Infotainment system when the vehicle is stationary or the traffic situation permits.

⚠ WARNING

Using online services without due care or unsupervised can result in the serious injury or even death of people in and around the vehicle, e.g. if they are locked inside the vehicle unintentionally.

- Always carry out the online services carefully and responsibly.

The vehicle added in the Volkswagen ID user account must first be driven for a few kilometres before individual online services can record, transmit and display correct data.

Do not disclose your login data, your password, the registration code, where applicable, or the S-PIN to others and keep them safe from access or viewing by other persons.

Change your password at regular intervals.

Impaired functionality

Even when the prerequisites for using the online services are met, the provision of the online services can be impaired or interrupted due to factors that are beyond the control of Volkswagen. Such factors include in particular:

— Maintenance, repairs, deactivations, updates and technical changes to your service provider's telecommunication systems, satellites, servers and databases.

— The telecommunications provider has changed the mobile telecommunication standard for transferring mobile data, e.g. from LTE or UMTS to EDGE or GPRS.

— An existing mobile telecommunications standard has been switched off by the telecommunications provider.

— Disturbance, interference or interruption of mobile and GPS reception, e.g. due to high speeds, weather, landscape, interfering devices or intensive use of the mobile network in the relevant cells.

— If your current location is in an area with no or insufficient mobile communications and GPS reception. This can also include tunnels, streets with tall buildings, garages, multi-storey car parks, underpasses, mountains and valleys.

— Restricted availability, completeness or correctness of information provided by third parties, e.g. maps.

— Countries, states and regions where mobile online services are not available.

Activation-free online services

The following services can also be used if the vehicle is not added to a Volkswagen ID user account.

This is the maximum possible range of functions. Not all services are available in all vehicles and countries.

— Information Call.

  Depending on equipment, the vehicle may have to be added to a Volkswagen ID user account in order to use the “Information Call” online service.

— Emergency Call Service .

— The legally required eCall Emergency System .

— Breakdown Call without transmission of vehicle data.

  Depending on equipment, the vehicle may have to be added to a Volkswagen ID user account in order to use the “Breakdown Call” online service.

In Europe, further information is available on the internet and on the Volkswagen website.

Setting up a Volkswagen ID user account

The Volkswagen ID user account provides personal access to the digital world of Volkswagen. The Volkswagen ID user account enables you to log into Volkswagen apps and websites.

You need a Volkswagen ID user account in order to use the online services. You can register for the Volkswagen ID user account via myVolkswagen or via the Volkswagen app, referred to below as app.

Registering via myVolkswagen

1. Open www.myvolkswagen.net.
2. Create a Volkswagen ID user account in the **Login or register** area.
3. Follow the instructions on the screen.

Registering via the app

1. Install the app.
2. Follow the instructions in the app.

Changing and deleting the user data of the Volkswagen ID user account

You can change or delete your user and login data. Any changes to your login details will simultaneously also apply to all the other Volkswagen systems that use the Volkswagen ID user account.

Changing user data via myVolkswagen

1. In the myVolkswagen customer area, open **Profile & settings** and open one of the following areas:
   — **Volkswagen ID**.
   — **Privacy settings and consents**.
2. Click on **Volkswagen ID** ▶ **Adapt data**.
3. Change and save the user data.
4. If necessary, adapt and save the information in the **Privacy settings and consents** area.

Deleting user data via myVolkswagen

1. In the myVolkswagen customer area, click on **Profile & settings** ▶ **Volkswagen ID** ▶ **Delete data**.

   Your data will be deleted. Your Volkswagen ID user account will not be deleted.

Carrying out Volkswagen Ident

The identity of the primary user must be confirmed in order to use security-relevant online services. You can provide proof of identity either personally at an authorised Volkswagen repairer or through Volkswagen Ident directly in the Volkswagen app.

1. When a message about the identity check is displayed upon using a security-relevant online service for the first time, observe the information and tap **Start**.
2. Have your identity document ready.
3. Follow the instructions on the screen.

   A message confirms that the identity check has been performed successfully.

Managing vehicles

After you have set up your Volkswagen ID and thus created your Volkswagen ID user account, you must add your vehicle to your Volkswagen ID user account by entering the 17-character vehicle identification number. You will be prompted to do so when creating your Volkswagen ID user account. As soon as your vehicle has been added to your Volkswagen ID user account, you can activate online services. To be able to activate some online services, you must link your Volkswagen ID user account to your vehicle.

Adding vehicles

You can add vehicles either via myVolkswagen or the app. Log in with your Volkswagen ID user account and follow the instructions in the corresponding area.

If you wish to verify yourself as the primary user for the vehicle, please refer to the chapter on the primary user *(→ Manage users)*.

Depending on the equipment, you can create user profiles in your vehicle. If you add the vehicle to your Volkswagen ID user account, the user profile for the Volkswagen ID user account is not automatically also created in the vehicle. To do this, you must log in as a new user in your vehicle's Infotainment system or enter the activation code in the Infotainment system *(→ Manage users)*.

Removing a vehicle via the app or myVolkswagen

If you are logged in as a user in your vehicle and delete this vehicle from your Volkswagen ID user account via the app or myVolkswagen, the user profile will also be deleted from this vehicle.

If you remove the vehicle with which you are logged in as the primary user in your vehicle, this is equivalent to restoring the factory settings of the Infotainment system. All user profiles will be deleted in the vehicle and will lose the rights assigned to their respective role to use online services.

The vehicle must be in online mode and have an internet connection in order to completely remove the link between the vehicle and the Volkswagen ID user account.

1. Open the vehicle overview and tap **Delete vehicle** or **Remove vehicle**.

Setting or changing the S-PIN

The S-PIN is requested in addition to the password as part of user authentication and acts as a second security level to protect security-relevant online services from unauthorised access.

The S-PIN is a four-digit number sequence that you set.

When creating the S-PIN, avoid easy-to-guess number sequences and generally known birthday dates. You must treat the S-PIN as strictly confidential. For security reasons, you should change the S-PIN if the S-PIN is disclosed to a third party.

Setting the S-PIN via myVolkswagen and via the app

— When adding your vehicle to the Volkswagen ID user account, you will be prompted to set the S-PIN.

The S-PIN should consist of four non-identical digits that are not sequential in either ascending or descending order.

Changing the S-PIN via myVolkswagen and via the app

To change the S-PIN, you must enter and confirm both the previous and new S-PIN.

— In myVolkswagen, you can change the S-PIN under **Mobile online services settings**.

Please note that it is only possible to change the S-PIN in myVolkswagen if your vehicle is listed under **My vehicles & products**, you are logged into the vehicle and your vehicle is in online mode.

— In the app, you can change the S-PIN in your user profile.

If you enter the S-PIN incorrectly several times, the input field will be blocked for a certain period.

Getting help

Various information sources are available to get help on the functions or operation of individual online services.

Help via myVolkswagen or the app

Depending on country, information on registration, individual services and frequently asked questions (FAQ) is available in the **Help & Contact** area under **Help for apps and digital services**.

Introduction to the topic

Depending on country and equipment, user profiles can be created for different vehicle users. This allows you to personalise your vehicle, i.e. assign individual vehicle settings, e.g. for the air conditioning system, to a user profile and call them up directly the next time you start a journey.

To personalise your vehicle, user profiles must be created in the vehicle. To do this, create a Volkswagen ID user account and then link it to your vehicle *(→ Manage users)*.

After entering the vehicle, the Infotainment system will ask you which user profile you would like to use to log in. If the selected user profile has been protected with an S-PIN, the S-PIN must be entered. After selecting the desired user profile, the settings stored there are loaded in the vehicle.

To avoid being asked for your S-PIN when selecting a user profile, you can activate the **Remember S-PIN** option. However, remember that third parties can then access your personal data.

Description of the user roles

Primary user

— The “primary user” is the person who orders the mobile online services for a vehicle using their Volkswagen ID user account and verifies themselves in the vehicle. The primary user should be the owner, keeper or another person who mainly uses the vehicle, e.g. lessee, company car user, and who is authorised for this role.

— One primary user can log in for each vehicle. If a new primary user verifies themselves for the vehicle, the previous primary user will automatically lose their user role.

Guest users

— The “guest user” profile is intended for all other users of the vehicle who want to save the vehicle settings in a personal user profile. Like the primary user, the guest user can also use mobile online services in the vehicle. However, the use of the mobile online services via the app is only possible to a limited extent.

Anonymous guest

— The “anonymous guest” profile is a non-personal user profile that exists locally in the vehicle and cannot be synchronised with the server. It is intended for persons who have access to the vehicle but do not log in. This non-personal user profile exists once and cannot be deleted. The vehicle settings are maintained in the “anonymous guest” user profile until another user profile is selected.

If no user is logged into the vehicle or a user logs out, the “anonymous guest” user profile is activated. The “anonymous guest” remains activated until a user logs in to the vehicle again.

Opening user management

1. Tap **Users** in the app overview or in the top display bar.

Creating a new user

To create a new user profile in the vehicle, you must first create a Volkswagen ID user account in the Volkswagen app on the mobile telephone or online via myVolkswagen.

A user profile has not yet been created in the vehicle

The first user who creates a user profile in the vehicle becomes the vehicle's primary user.

1. Switch on the ignition.
2. Tap **Login**.

   The login menu is opened.
3. Tap **Login** again.
4. Scan the QR Code® and follow the instructions in the app and on the Infotainment system.

   When registering a new user, you will be prompted to create an S-PIN. For further information, please refer to *(→ S-PIN)*.
5. Log in using the displayed QR Code® or alternatively by means of **Log in with e-mail**.

After successful login, the newly created user profile is displayed in the user administration area with the user role "Primary user".

User profiles already exist in the vehicle

1. Switch on the ignition.
2. Tap **Change users** ▶ ⊕.

   Or: open the app overview and tap **Users** ▶ **Other** ▶ ⊕.

   The login menu is opened.
3. Tap **Login**.
4. Log in using the displayed QR Code® or alternatively by means of **Log in with e-mail**.
5. Follow the instructions on the Infotainment system.

Becoming the primary user

The primary user should be the owner, keeper or another person who mainly uses the vehicle, e.g. lessee, company car user, and is authorised for this role. The first user who logs into the vehicle becomes the vehicle's primary user. The user role of "primary user" can only be assigned once per vehicle.

A mobile telephone that can scan QR Code®s is helpful for becoming the primary user.

1. Follow the instructions in the chapter *(→ Manage users)*.
2. *Optional:* provide proof of authorisation *(→ Volkswagen Ident process)*. This is necessary only if security-relevant online services are to be activated.

After successful registration, you are the primary user of the vehicle. The online services are activated.

Protecting your user profile

Your Volkswagen ID user account and user profile are protected by your personal password or S-PIN. The password and S-PIN can be changed using the app or online via myVolkswagen.

As the default setting, your user profile is protected against unauthorised changes by an S-PIN. Your user profile is no longer protected if you have activated the **Save S-PIN** function in the welcome menu. If you want to protect your user profile with an S-PIN again, you can activate the S-PIN. Login is then possible only after entering the S-PIN. If you protect your user profile by means of an S-PIN, you must enter your S-PIN each time before starting a journey.

1. Tap **Users** ▶ ⚙ ▶ **Login details**.
2. Activate **Protect user account with S-PIN**.

Deleting a user

Deleting the primary user

If you sell your vehicle or someone else is to take over the role of primary user for your vehicle, you should restore the factory settings of the Infotainment system. This will also delete the vehicle's primary user and the service-specific data that is stored in the vehicle.

When you restore the system to factory settings, a pop-up window appears in the Infotainment system asking whether you also want to reset the primary user. Carrying out this function will delete the link between the primary user and the services in the relevant vehicle. Resetting the Infotainment system to the factory settings permanently deletes entries, settings and the stored data according to the selection you make.

The primary user can delete their own user profile. All existing user profiles are then deleted and the Infotainment system is reset to the factory settings. The primary user can also delete all other user profiles apart from the guest user.

All other users can only delete their user profile if they are logged in.

Every user can reset the system to the factory settings. All existing user profiles apart from the anonymous guest are deleted when the system is reset to the factory settings.

1. In the app overview, tap ⚙ ▶ **Restore factory settings**.

   Or: as the logged-in primary user, tap **Users** ▶ ⚙ ▶ **Delete active user** ▶ **Factory settings**.

Deletion of user profiles by the primary user

Only the primary user is authorised to delete other user profiles.

Proceed as follows to delete other user profiles:

1. Tap **Users** ▶ ✎.

   User profiles that can be deleted are marked with 🗑.

2. Tap 🗑 next to the user profile that is to be deleted.

   The selected user profile is deleted.

3. Tap ✎ to return to the user management area again.

Deleting your own user profile

The logged-in user can delete their own user profile.

The data is only deleted from the vehicle when user profiles are deleted. The associated Volkswagen ID user account with the stored vehicle settings continues to exist and can be linked to the vehicle again by means of the login process. Consents given in the registration process or online services are not saved.

1. Tap **Users** ▶ ⚙ ▶ **Delete active user** ▶ **Delete**.

   The user profile is deleted and the "Anonymous guest" user profile is activated.

Troubleshooting

Where is my user profile?

If you have previously created a user profile in the vehicle and it is no longer visible in the user management area, it is possible that it has been deleted. Log into the vehicle again *(→ Manage users)*.

I have forgotten my S-PIN

If you have forgotten your S-PIN, you can have it reset again via myVolkswagen or via the app.

Privacy settings

Using the “Privacy settings” function, it is possible to allow or prevent data transfer between the vehicle and internet in several levels.

Please note that every vehicle user can adjust individual settings in the “Privacy settings” function. These settings may be different from those preferred by the vehicle keeper.

Note that the privacy settings for vehicles assigned to a fleet, e.g. rental cars, may differ. Please contact your fleet manager for more information.

If data transfer is restricted, online vehicle functions such as updates cannot be executed.

The restrictions also apply to new online vehicle functions that are provided for the vehicle in future.

Data transfer by mobile devices and communication by these devices with the vehicle or legally required online services, e.g. the legally required eCall Emergency System, cannot be blocked or deactivated by the settings of the “Privacy settings” function.

Some online vehicle functions and tracking services are dependent on the equipment and are not available in all countries.

Connection to the Internet – Display

Depending on the selected status, the following symbols are shown in the top display bar of the Infotainment system:

Offline mode:

Your vehicle is offline. The mobile online services are not available.

Online mode (currently no connection):

Online mode is selected but it is not currently possible to connect to the internet.

Online mode:

Your vehicle can transmit and receive data for activated online services.

Online mode with location data:

Your vehicle is in online mode and can transmit additional location data for use of other activated online services.

Online mode with signal strength display:

Your vehicle is connected to the internet with the displayed mobile radio standard and signal strength.

Offline mode – V2X technology active.

Your vehicle is in offline mode and is continuing to transmit data via the “V2X technology” function *(→ V2X technology)*.

There is no signal strength display in offline mode and in the event of faults in the eSIM card.

Even if offline mode is activated, online mode can be activated briefly by online services that are security-relevant and legally required.

No mobile online services are activated and no data of these services is transmitted during this time. Offline mode will be reactivated and the eSIM card deactivated again after successful transfer of the security-relevant or legally required data.

Opening the Privacy settings menu

1. Switch on the ignition.

   The set “Privacy settings” mode is displayed on the Infotainment system.

2. In the app overview, tap ▶ ▶ **Privacy settings**.

Selecting online or offline mode

1. Open the **Privacy settings** menu.
2. Activate **Vehicle/Usage data** in the menu with the same name.

   Depending on the mode, either ⊕ or ⊕ will be displayed.

Effects of offline mode

— Online services are deactivated and do not send any data.
— The eSIM card is deactivated.
  All vehicle functions that require an online connection are deactivated.
— It is not possible to update information and data stored in the control units, e.g. emergency call numbers, when in offline mode.
  Out-of-date information and data can restrict functions and online services or mean that they are not available.
— It is not possible to display the signal strength of the eSIM card.

ℹ Legally required online services cannot be deactivated and still transmit data.

Effects of online mode

— Online services can transmit and receive data depending on their settings in the user profile.
— The eSIM card is activated.
  Data transmission is possible for all vehicle functions that require an online connection.
— It is possible to display the signal strength of the eSIM card.

Selecting online mode with location data

1. Open the **Privacy settings** menu.
2. Activate **Send location data** in the menu with the same name.

   ⊕ is displayed.

Effects of online mode with location data

— Online services can transmit and receive data depending on their settings in the user profile.
— Positioning data is processed in order to provide online services with location reference for authorised users in the Infotainment system, in the app or in myVolkswagen (e.g. the parking position in the app).
— The eSIM card is activated.
  Data transmission is possible for vehicle functions that require an online connection.
— The signal strength display of the eSIM card is available.

Managing online services

The following functions are available for deactivating and activating the online services:

— Blocking or allowing data transfer by means of the privacy settings *(→ Privacy settings)*.

— Individual activation and deactivation via myVolkswagen or via the app.

If data transmission is restricted by the “privacy settings”, it is not possible to activate or deactivate services individually. The respective online services can be run again only after the corresponding deactivation is cancelled.

In Europe, further information is available online at:

https://connect.volkswagen.com

If you deactivate all online services individually, the control unit with the eSIM card can still transmit data.

Legally required online services and their data transmissions cannot be switched off and cannot be deactivated, e.g. the statutory eCall Emergency System eCall.

Introduction to the topic

Personalised vehicle settings, e.g. your preferred air conditioning settings, allow you to adapt your vehicle to your preferences in the best possible way. The personalised vehicle settings are saved in a user profile in the vehicle and are synchronised with the Volkswagen ID user account when there is an internet connection. In this way, you can also transfer your settings to another vehicle, if this is possible depending on the equipment, by logging into the other vehicle with your user profile.

Personalisation is particularly useful if several users use the vehicle.

In order to use personalisation, you may need a fee-based contract to use the mobile online services.

Further information on mobile online services .

Every time you change a personalised vehicle setting, it is automatically assigned to the active user profile, saved and synchronised with the Volkswagen ID user account, provided there is an internet connection.

For information on which vehicle settings can be personalised, see *(→ Online personalisation)*.

Information on creating a user profile *(→ Manage users)*.

Opening the configuration wizard for personalised vehicle settings

1. In the app overview, tap ⚙ ▶ **Configuration wizard**.

   Or: in the app overview, tap ⚙ ▶ **Configuration** ▶ **Configuration wizard**.

Personalised vehicle settings

The personalised vehicle settings are dependent on the equipment and are not available in all vehicles and countries. Some personalised vehicle settings are not stored online, but are only assigned to the user profile locally in the vehicle.

The following functions can be personalised:

— Settings for single door unlocking, convenience opening and windows.

— Wiper settings.

— Seat and mirror settings.

— Settings for switch-on times for dipped beam and convenience turn signal.

— Ambient settings.

— Air conditioning system settings.

— Selected settings of driver assist systems.

— Driving profile selection.

— Multifunction display and displays in the instrument cluster.

— Multifunction display and displays in the head-up display.

— Selected Infotainment system settings, e.g. radio station.

— Date and time display.

Synchronising vehicle settings

Depending on equipment and country, the vehicle has an online personalisation function. With online personalisation, vehicle settings changed in the vehicle are automatically assigned to the active user profile. The vehicle settings are also automatically synchronised in the following situations when an internet connection has been established:

— All last used user profiles are synchronised when the ignition is switched on.
— When switching to another profile, the newly activated user profile and the user profile that has now been deactivated are synchronised.
— At the end of the journey and when the ignition is switched off, the last active user account is synchronised.

Starting synchronisation manually

You can also synchronise user profiles manually, e.g. if synchronisation failed when logging in or the vehicle did not have an internet connection during automatic synchronisation.

1. In the app overview, tap **Users** ▶ **Me** ▶ ⟲.

Synchronisation cannot be performed if the vehicle is not connected to the internet, e.g. in underground car parks.

Synchronisation is also not possible if you have activated offline mode.

Manual synchronisation is possible only once in each driving cycle.

If a user profile is active in another vehicle and settings are synchronised from there, these settings are also transferred to your vehicle and assigned to the corresponding user profile.

In-Car Shop

The In-Car Shop offers you the possibility of renewing or purchasing the following online services or functions directly in the vehicle:

— Activate additional functions (upgrades) for your vehicle .

— Extend the contract term of online services.

— Purchase and download apps, update the apps purchased in the In-Car Shop and delete the apps again.

— Depending on country and equipment: purchase data plans.

In addition, you can select the country and the language for the In-Car Shop under 🛒 ▶ ⚙. The products offered and their availability vary depending on selected country.

App update

When updates are available for apps, you will be notified via a pop-up window. You can perform the updates immediately or at a later time in the app overview under **App Updates** or in the In-Car Shop. There you will also receive information on other possible updates. If you want to update the apps downloaded from the In-Car Shop, you must log in as the primary user.

Introduction to the topic

With Upgrades, the vehicle can be permanently or temporarily extended by new functions.

Depending on country and equipment, you can permanently or temporarily activate convenience and Infotainment system functions and also driver assist systems for a fee. You can enable additional functions via the Volkswagen Connect Shop, which you can access via your Volkswagen ID user account. Depending on the vehicle equipment, functions can also be activated directly via the Infotainment system in the In-Car shop.

Activated functions are not bound by the term of the contract for use of the mobile online services.

Inform the user or buyer about permanently activated and time-limited functions when renting or selling the vehicle.

WARNING

Activating functions while the vehicle is in motion can distract you from the road. Serious accidents and fatal injuries can occur if the driver is distracted.

- Only activate functions when the vehicle is stationary.
- Drive with your full attention and with responsibility.

If the required hardware for the respective activatable function is not available in the vehicle, it can be retrofitted in some cases by a suitably qualified workshop. Volkswagen recommends using an authorised Volkswagen repairer.

If the required software for the activatable function is not available in the vehicle, the software can be retrofitted . Retrofitting may be subject to charge, depending on the type of software.

Status of the function

Function activated.

Function faulty or temporarily not available.

You can view the contract term of the respective function in the Volkswagen Connect Shop in the myVolkswagen customer area or, depending on equipment, in the Infotainment system under ▶ ▶ **Privacy settings and online services**.

Viewing and activating functions

Prerequisites

✓ A suitable Infotainment system is installed in the vehicle.
✓ The hardware in the vehicle is compatible and offers the required performance.
✓ A valid contract for use of the online services exists between you and Volkswagen.
✓ You are the primary user *(→ Manage users)*.
✓ Sufficient mobile reception is available at the current location of the vehicle.
✓ The electrical system in the vehicle is ready for use.
✓ The vehicle battery has a sufficient charge level.
✓ The 12-volt vehicle battery is appropriately charged.
✓ The factory-fitted control unit with eSIM card is present.

Activating functions

The primary user can view and activate all features on demand for the vehicle in the In-Car Shop or in the Volkswagen Connect shop.

1. To open the In-Car Shop of the Infotainment system, tap 🛒 in the app overview.
2. Tap the function in the In-Car Shop and follow the instructions in the Infotainment system.

Do not drive the vehicle during activation.
Follow the instructions in the Infotainment system during and after activation.

1. Deactivate the vehicle's drive system and switch on the electronic parking brake.
2. Close the bonnet, boot lid, all windows and doors and – if present, depending on equipment – glass roof.
3. Switch off the stationary air conditioning.
4. Switch off the light.
5. End route guidance of the navigation system.
6. Make sure that all vehicle occupants get out and that no animals are left behind in the vehicle.
7. Take all vehicle keys with you and get out of the vehicle.
8. Lock the vehicle and remove the vehicle keys from the detection range of the vehicle.
9. Do not charge the vehicle.
10. Do not use the app.

After successful activation, some functions require you to park the vehicle for around 10 minutes.

Before reactivating the vehicle's drive system, read the notification in the Infotainment system about completed activation. Observe the instructions if activation was not successful.

If you are the primary user for the vehicle *(→ Manage users)*, you can also view activated functions in the app.

Viewing activated functions

1. In the app overview, tap ⚙ ▶ **Upgrades**.

All available functions for the vehicle can be viewed in the In-Car Shop in the Infotainment system.

Troubleshooting

The desired function is not available in the shop

The functions that are available for your vehicle are shown to you in both the In-Car Shop and Volkswagen Connect Shop. This is due to equipment requirements that must be met for certain features on demand.

If the required hardware is not available in the vehicle for the desired function, it can be retrofitted in some cases by a suitably qualified workshop.

If the required software for the activatable function is not available in the vehicle, the software can be retrofitted . Retrofitting may be subject to charge, depending on the type of software.

The purchased function was not activated in the vehicle

The vehicle must be in online mode and the signal strength display must show good internet availability. Check the privacy settings *(→ Privacy settings)* and park your vehicle outdoors. Internet availability may be impaired, for example, by the privacy settings or a garage.

Introduction to the topic

The functions and settings of the Infotainment system depend on the equipment and are not available in all countries.

Before using for the first time

Before using the Infotainment system for the first time, please observe the following points so you can make full use of the available functions and settings:

— Read the safety notes *(→ Infotainment system)*.

— If you want to delete the settings stored in the Infotainment system, restore the factory settings of the Infotainment system *(→ Introduction to the Infotainment system)*.

— To have quick access to favourite radio stations, also simply referred to as “stations” in the following, search for them and save them to presets .

— To make telephone calls via the mobile phone interface, pair and connect a mobile telephone .

— To use mobile online services, register for the mobile online services .

Other applicable documents

In addition to this owner’s manual, please observe and read the following documents when using the Infotainment system and its functions:

— Supplements to the vehicle wallet of your vehicle.

— Operating instructions for the mobile telephone, external data media, audio and media sources and devices.

— Instructions for retrofitted or additionally used accessories for the Infotainment system.

— Digital owner’s manual in the Infotainment system, depending on equipment and not available in all countries.

Safety notes

Some functions may contain links to websites that are operated by third parties. Volkswagen does not assume ownership of the third-party websites that are reached via links and is not responsible for their content.

Some functions may contain external information supplied by third parties. Volkswagen is not responsible for external information being correct, up-to-date and complete, or for any infringement of third-party rights.

The radio stations or owners of the data storage media and audio sources are responsible for the content provided.

Tunnels, tall buildings, street canyons, garages, multi-storey car parks, underpasses, mountains and valleys or other electrical devices such as battery chargers can impair reception of mobile communications, GPS and radio signals.

Observe the other applicable documents .

WARNING

The central computer of the Infotainment system is networked with the control units in the vehicle. In the event of improper repair or improper removal and installation of the central processor, there is an increased risk of accident and injury due to a control unit that is not functioning or not functioning correctly.

- Never replace the central computer with a used central computer taken from an older vehicle or a recycling facility.
- Only have the central computer removed, installed or repaired by a specialist company qualified to perform this work. Volkswagen recommends using an authorised Volkswagen repairer.

WARNING

Operating the Infotainment system, reading information on the screen, connecting, inserting or removing a data medium or an audio source can distract you from the traffic situation. Unfavourable light conditions and a damaged or dirty screen may result in information not being read or not being read correctly from the screen, which can distract you from the traffic situation. Accidents and serious or fatal injuries can occur if the driver is distracted while the vehicle is in motion.

- Drive with your full attention and with responsibility.
- Only operate the Infotainment system when the vehicle is stationary or when the traffic situation permits.
- Have damaged screens repaired by a suitably qualified workshop. Volkswagen recommends using an authorised Volkswagen repairer.
- Clean dirty screens.

WARNING

If the volume is set too high, acoustic signals may not be heard, which can cause accidents and injuries.

- Adjust the volume so that you can always hear acoustic signals, e.g. emergency service sirens.

WARNING

A volume that is too loud can damage the hearing, even if the hearing is exposed to loud volumes only for a short time.

- Adjust the volume so that it is pleasant for all vehicle occupants.
- Avoid volumes that are too loud.

WARNING

Sudden changes in volume, such as when changing or connecting an audio or media source, can distract the driver and cause accidents and injuries.

- Reduce the volume before switching the audio or media source or connecting a new source, for example.

WARNING

The following conditions can lead to situations where emergency calls, telephone calls and data transmission are restricted, interrupted or not possible:

- Your current emergency call location is in an area with no or insufficient mobile communications and satellite signal reception.
- The mobile communications network of telecommunication providers is not available in areas with sufficient mobile communications and satellite reception.
- If the components in the vehicle required for emergency calls, telephone calls and data transmission are damaged, not working, or do not have sufficient electrical power.
- The battery of the mobile telephone is empty or does not have a sufficient charge level.

WARNING

Radio stations can transmit catastrophe and danger warnings. If catastrophe and danger warnings cannot be received or output, this can cause accidents and injuries. The following conditions can prevent these warnings from being received or issued:

- Your current location is in an area with no or insufficient radio signal reception.

- The frequency bands of the radio stations are subject to interference or are not available in areas with adequate radio signal reception.
- The loudspeakers and the components required for radio reception in the vehicle are damaged, not working or do not have sufficient electrical power.

WARNING

In some countries and mobile networks, a call for assistance or an emergency call can be made only subject to the following prerequisites:

- A mobile telephone with unlocked SIM card and sufficient call credit is connected to the mobile phone interface of the vehicle.
- Sufficient network coverage is available.

WARNING

If a mobile telephone or two-way radio that is not connected to an external aerial is used, electromagnetic radiation in the vehicle could exceed limit values and thus be a health hazard for all vehicle occupants.

- Maintain a minimum distance of 20 cm (around 8 inches) between the aerials on the mobile telephone and an active medical implant (e.g. a pacemaker) since the mobile devices may impair the function of active medical implants.
- Do not carry a mobile telephone that is operational close to or directly above an active medical implant, for example in a breast pocket.
- Switch off mobile telephones immediately if you suspect they may be interfering with an active medical implant (e.g. a pacemaker) or any other medical device.

WARNING

Mobile telephones, external devices and accessories in the vehicle that are loose, unsecured or not properly secured can be flung though the vehicle interior and cause accidents and serious injuries in the event of a sudden driving or braking manoeuvre or in the event of an accident.

- Safely secure or stow mobile telephones, external devices and accessories outside the deployment zone of the airbags.
- Always secure or stow mobile telephones, external devices, audio sources and accessories securely in the provided stowage areas and holders in the vehicle so that they cannot be flung through the vehicle interior and hinder the driver.
- Never leave any heavy, hard or sharp objects in the pockets of clothing.
- Arrange the wires for external devices and audio sources so that they do not obstruct the driver.

WARNING

Driving recommendations and displayed traffic signs of the navigation may deviate from the current traffic situation and must not tempt you to take a safety risk.

- Always drive with due care and attention and be ready to intervene at all times.
- Always remember that road signs, traffic signals, traffic regulations and local conditions take precedence over driving recommendations and displays provided by the navigation system.
- Ensure that your speed and driving style are always appropriate for the current visibility, weather and road/traffic conditions.

NOTICE

The radiation produced by the mobile telephone when switched on may interfere with sensitive technical and medical equipment, possibly resulting in malfunction or damage to the equipment.

- Always switch off your mobile telephone in areas where special regulations apply and when the use of mobile devices is forbidden.

NOTICE

The loudspeakers can be damaged if the volume is set at too high a level and by playback which is too loud or distorted.

- Choose the volume setting so that the loudspeakers are not damaged.

Notes on use

The Infotainment system needs a few seconds for a complete system start and does not respond to inputs during this time. The duration of a system start depends on the functional scope of the Infotainment system and can also take longer than usual particularly at low and high temperatures. During system startup, only the rear view camera image can be displayed. The Infotainment system must start up completely before all displays are available and before it is possible to execute functions.

When using the Infotainment system and the corresponding accessories, e.g. headphones, please observe the country-specific regulations and legal requirements.

There may be restrictions on the use of Bluetooth® devices in some countries. Information is available from the local authorities.

To ensure that the Infotainment system functions correctly, it is important to make sure the system is switched on and that, where applicable, the correct date and time are set in the vehicle.

A missing function button on the screen does not constitute a fault in the unit; It reflects the equipment that is available in the country in question.

If settings are modified, displays on the screen may vary and the Infotainment system may behave differently from the description in this manual in some cases.

Some of the functions and settings of the Infotainment system are available only when the vehicle is stationary. In some countries, the driving mode selector must be additionally turned to neutral position **N** or the (P) button for the electronic parking brake pressed on the driving mode selector. This is not a malfunction, but simply a legal requirement.

Use only suitable audio sources and data media .

In certain vehicles with Park Distance Control, the volume of the current audio source is lowered automatically when reverse gear is engaged. It is possible to adjust the volume reduction *(→ Park Distance Control)*.

Use current map data for the navigation system.

To clean the screen of the Infotainment system, observe the information in the section on caring for the vehicle interior *(→ Vehicle care, interior)*.

Switch the ignition on before switching the Infotainment system back on if the 12-volt vehicle battery has been disconnected.

The Infotainment system is automatically switched off when the vehicle's drive system is deactivated and when the charge level of the 12-volt vehicle battery is low.

Information on the included software and the licence conditions is stored in the Infotainment system, depending on vehicle, for example, under **Settings ▶ Info** or **Settings ▶ System information**, **Settings ▶ Copyright** and **Settings ▶ Licence information**.

If you sell your vehicle or loan it to somebody else, make sure that all the stored data, files and settings are deleted and that the external audio and media sources and data media are removed where applicable.

Some functions in the Infotainment system require an active Volkswagen ID user account for mobile online services for the vehicle and a connection to the internet . The data transfer must not be restricted for the execution of the functions.

Marks, licences, copyright

Marks and licences

Certain terms in this manual are accompanied by the symbol ® or ™. These symbols indicate trademarks or registered marks. However, the absence of this symbol does not constitute a waiver of the rights concerning any term.

Other product names are registered marks of the respective legal owners.

— Manufactured under license from Dolby Laboratories. Dolby and the double-D symbol are trademarks of Dolby Laboratories.

— Manufactured under license from Dolby Laboratories. Dolby, Pro Logic and the double-D symbol are trademarks of Dolby Laboratories.

— All SiriusXM services require a subscription. See the SiriusXM Customer Agreement for complete terms at www.siriusxm.com (US) or www.siriusxm.ca (Canada). All fees, content and features are subject to change. Satellite and steaming lineups may vary. SiriusXM, Pandora and all related logos are trademarks of Sirius XM Radio Inc. and its respective subsidiaries. All rights reserved.

— HD Radio™ Technology manufactured under license from iBiquity Digital Corporation, a subsidiary of Xperi Inc., U.S. and Foreign Patents. For patents see https://xperi.com/hd-radio-patents/. Xperi, HD Radio, HD, and "ARC" logos and their respective logos are trademarks or registered trademarks of Xperi Inc. and its subsidiaries in the United States and other countries.

— QR Code® is a registered trademark of DENSO WAVE INCORPORATED.

— Apple Music is a trademark of Apple Inc.

— SPOTIFY and the Spotify logo are among the registered trademarks of Spotify AB. Compatible vehicle and Spotify Premium subscription required, where available.

— Android Auto® is a trademark of Google LLC.

— Apple CarPlay® is a trademark of Apple Inc.

— Bluetooth® is a registered trademark of Bluetooth® SIG, Inc.

— iPod®, iPad® and iPhone® are trademarks of Apple Inc.

— MPEG-4 HE-AAC audio coding technology and patents are licensed by Fraunhofer IIS.

— SD® and SDHC® are brands or registered trademarks of SD-3C LLC in the USA and other countries.

— Windows® is a registered trademark of Microsoft Corporation, Redmond, USA.

— This product is subject to certain intellectual property rights and copyrights owned by the Microsoft Corporation. The use or distribution of this type of technology outside this product requires a licence from Microsoft or an authorised Microsoft company.

Copyright law

Audio and video files saved on mobile telephones, data media, audio and media sources and devices are normally subject to national and international copyright laws. Observe the legal requirements.

Infotainment system overview

Fig. 1 Overview of the Infotainment system (illustration).

1. Menu button: ⁞⁞⁞⁞.
2. Sensor field for switching the Infotainment system on and off and for muting the system.
3. Touch slider for volume adjustment and map view.
4. Home button: ▢ (below: HOME).
5. Pages.
6. Vehicle favourites.
7. App favourites.
8. Control Centre.
9. Display of notifications and status displays (availability depends on country).

Further information and tips for operating the Infotainment system are provided in these operating instructions *(→ Introduction to the Infotainment system)*.

1 Menu button: ⁞⁞⁞⁞

The apps are available as function buttons in the app overview.

1. Tap ⁞⁞⁞⁞ to open the app overview.

2 Sensor field for switching the Infotainment system on and off and for muting the system

— Tap and hold the sensor field for a few seconds to switch the Infotainment system on or off manually.

— Briefly tap the sensor field to mute the Infotainment system.

3 Touch slider for volume adjustment and map view

— Swipe to the left to lower the volume.

— Swipe to the right to increase the volume.

— To zoom the map view in or out, swipe with two fingers simultaneously to the left or right.

(4) Home button: ▢ (below: HOME)

The home screen has pages with tiles that contain function buttons.

1. Tap HOME to open the home screen.

(5) Pages

Some menus and functions have several pages with different content. The current page is highlighted.

— Tap the marking to change to a page.

— Swipe your finger to the left or to the right across the screen to switch between pages.

(6) Vehicle favourites

Vehicle functions can be saved in the vehicle favourites for quick access, e.g. Auto Hold function. The vehicle favourites can be personalised *(→ Introduction to the Infotainment system)*.

1. Tap 🚗 to open the vehicle favourites.

(7) App favourites

Main menus can be saved in the app favourites for quick access. The app favourites can be personalised *(→ Introduction to the Infotainment system)*.

1. Tap the corresponding function button to open a main menu in the app favourites.

(8) Control Centre

There are additional function buttons in the Control Centre for functions and notifications, e.g. the screen brightness can be adjusted here or the Auto Hold function switched on and off. You can configure the displayed functions *(→ Introduction to the Infotainment system)*.

1. Tap the marking and slide it down to open the Control Centre.

(9) Display of notifications and status displays (availability depends on country)

Display of notifications and status displays of the user management function and “Privacy settings” function with signal strength display of the eSIM, available depending on country.

1. To open the additional window with the notifications, tap display of notifications.

   Or: to open the menu for user management or the “Privacy settings” function, tap the status display for user management or the “Privacy settings” function.

Scroll bar (without item number)

Some menus and functions have further content above or below the current screen view.

1. Tap the scroll bar and swipe it up or down to display additional content.

Operating the Infotainment system

Resetting the Infotainment system to the factory settings

1. Open the app overview and tap ⚙ ▶ **Settings** ▶ **Restore factory settings**.

Observe the information in this regard in the section on mobile online services .

The vehicle settings are deleted by resetting to the factory settings. This also includes personal data, where applicable. Mobile online services can then no longer be used in this vehicle. The services can be used again only after renewed activation. If there is a primary user in the vehicle, this user will also be deleted. For further information, refer to the section on mobile online services . If the vehicle has the "Digital Key" function and digital keys have been created, these will be irretrievably deleted.

Opening the quick guide for the Infotainment system (if available)

The quick guide for the Infotainment system provides further information and tips for operation of the system.

1. Open the app overview and tap ? ▶ ☝.

Switching the Infotainment system on or off

The Infotainment system switches on automatically in the following cases:

— When the driver gets into the vehicle.

— When the ignition is switched on if the Infotainment system was not manually switched off before.

If the last set volume does not exceed the preset maximum switch-on volume, the Infotainment system will start up at this volume.

The Infotainment system switches off automatically in the following cases:

— When the driver leaves the vehicle.

— If you leave the vehicle when the ignition is inactive.

— After around 30 minutes without a user input if you switch on the Infotainment system manually when the ignition is inactive.

— After about 30 minutes without a user input if you remain seated in the vehicle when the ignition is inactive.

If the Infotainment system no longer reacts, it will restart automatically. If the restart does not work, tap and hold the sensor field for switching the Infotainment system on and off for around 15 seconds.

⚠ WARNING

During a restart of the Infotainment system, functions such as the display of the rear view camera system, acoustic and visual warnings of Park Distance Control and Rear Traffic Alert, Park Distance Control, Rear Traffic Alert and other acoustic warnings, may be temporarily unavailable. This can lead to accidents and serious injuries.

- Always pay due attention and do not rely exclusively on the systems. The driver is always responsible for all driving tasks.
- Pay attention to the traffic situation and the area around the vehicle when driving into and out of a parking space.
- Use the foot brake to slow the vehicle in a hazardous situation.
- Wait until the Infotainment system and other systems have started up completely.

Operating the screen (touchscreen)

You can operate the functions of the Infotainment system using the screen. The screen brightness can be adjusted via the Control Centre *(→ Introduction to the Infotainment system)* (8). You can find a detailed explanation of the different finger gestures in the quick guide to the Infotainment system, where available.

1. Open the app overview and tap ? ▶ ☝ ▶ **Operation**.

Main menus in the app overview

Main menus are visible as function buttons in the app overview and on the home screen. The position of the function buttons can be configured.

Opening main menus

1. Tap the corresponding function button to open a main menu, e.g. △ for the navigation system.

The following main menus may be included as function buttons in the app overview:

Background lighting, **Background lighting** .

App-Connect .

Assist systems .

Vehicle .

IDA: voice assistant .

ID. software: you will find information on the software version here.

Sound *(→ Introduction to the Infotainment system)*.

Air conditioning .

Charging .

Navigation .

Users, **User management** .

Parking.

Radio/Media .

Legal.

Settings *(→ Introduction to the Infotainment system)*.

Shop.

Seats.

Stat. air con: stationary air conditioning .

Telephone .

Tips/Help: here you can find further information on the functions and operation of the Infotainment system, e.g. the quick guide *(→ Introduction to the Infotainment system)*.

Configuring the app overview

You can configure the layout of the function buttons and also the pages and displays in the app overview or have them positioned on the basis of factory layout templates.

1. Open the app overview.
2. Tap a function button and hold until an additional window opens.
3. Tap a function button in the additional window and hold until the function button is visibly highlighted.
4. Move the function button to the desired position and release.
5. Tap **Finish**.

Personalisation

Personalise function buttons and pages depending on the vehicle equipment *(→ Introduction to the Infotainment system)*.

Operating break

If the Infotainment system is operated frequently within a short period of time while driving, there may be a short operating pause. This operating pause will be cancelled automatically after a short time.

Seasonal Infotainment animations

Depending on the country, thematic animations are displayed in the Infotainment system at certain times of the year. In addition, ID. Light animations and certain sounds of the Infotainment system will be adapted in some of these periods. This function is activated at the factory and can be deactivated if required.

Activating or deactivating seasonal Infotainment animations

The function can be activated or deactivated at any time while a seasonal animation is displayed in the Infotainment system. Only the currently running animation in the Infotainment system can be activated or deactivated. Future seasonal animations will be automatically activated and displayed again.

1. Open the app overview and tap **Settings** ▶ **Screen** ▶ **Seasonal Infotainment animations**.
2. Tap **Switch off running seasonal Infotainment animations** and activate or deactivate as required.

Personalising the Infotainment system

Depending on equipment, you can personalise the Infotainment system to permit faster access to favourite or frequently used functions.

You can find tiles for accessing further menus and functions on the pages of the Infotainment system.

Configuring tiles

Configure the tiles by removing or adding pages.

1. Tap HOME.
2. Tap a tile and hold until an additional window opens.
3. To add a new page with tiles, tap ⊕, tap the desired template, and tap **OK**. New tiles are created without functions.

   Or: to remove a page with tiles, tap **Delete page** and confirm.
4. Tap **Finish** to return to the page.

At least two pages are always available. These cannot be removed.

Adapting tiles

Adapt the tiles and the displayed tile functions on the Infotainment system pages in order to customise the Infotainment system to suit your needs.

1. Tap HOME.
2. Tap a tile and hold until an additional window opens.
3. To add functions to a tile, tap the desired tile.
4. Tap the desired function in the additional window. Various functions are available depending on the size of the tile.
5. To remove a function from a tile, tap the desired tile and then tap the desired function in the additional window.
6. Tap **Finish**.

More functions are available for some tiles than are visible at first glance in the additional window. Swipe to the left or right in the additional window to see all functions.

Adapting the Control Centre

Adapt the Control Centre of the Infotainment system to permit faster access to favourite or frequently used functions such as the Auto Hold function.

1. Open the Control Centre.
2. Tap a function and hold until an additional window opens.
3. Tap the desired function in the additional window.
4. Tap **Finish**.

More functions are available for the Control Centre than are visible at first glance in the additional window. Swipe to the left or right in the additional window to see all functions.

Personalising app favourites

1. Tap ⊕ to add a main menu.

   Or: to customise a main menu, tap and hold an assigned memory location until an additional window opens.

2. Tap the desired function in the additional window.
3. Tap **Finish**.

Deleting app favourites

1. Tap ⊕.

   Or: tap and hold an assigned memory location until an additional window opens.

2. Tap the desired favourite in the app favourites.
3. Tap ≡ ▶ **Delete favourite** and confirm.
4. Tap **Finish**.

It is also possible to reset all app favourites to the factory settings. To do this, tap ≡ ▶ **Factory settings**.

Personalising vehicle favourites

1. Open the vehicle favourites.
2. Tap ⊕ to add vehicle favourites.

   Or: to customise vehicle favourites, tap and hold an assigned memory location until an additional window opens.

3. Tap the desired function in the additional window.
4. Tap **Finish**.

Deleting vehicle favourites

1. Open the vehicle favourites.
2. Tap ⊕.

   Or: tap and hold an assigned memory location until an additional window opens.

3. Tap the desired favourite in the vehicle favourites.
4. Tap ≡ ▶ **Delete favourite**.
5. Tap **Finish**.

It is also possible to reset all vehicle favourites. To do this, tap ≡ ▶ **Reset all** and confirm.

Opening tips for personalisation (if available)

You can find further information and tips for personalisation in the digital instructions for the Infotainment system.

1. Open the app overview and tap ? ▶ ☝ ▶ **Custom**.

System and sound settings

Changing settings

The meanings of the following symbols apply to all system and sound settings.

Changes are automatically stored when a menu is closed.

☑, ◉ or ⊷ The setting is selected and activated or switched on.

☐, ◯ or ⊶ The setting is not selected and is deactivated or switched off.

▽ or ∨ Open the drop-down list.

+ Increase the setting values.

– Decrease the setting values.

< Gradually back.

> Gradually forwards.

Change setting values with the slider control (infinitely variable).

System settings

Due to over-the-air updates, some of the system settings listed here may have been omitted or new ones may have been added.

The following functions, information and setting options may be available in the system settings:

— Reset to default settings.
— Screen.
— V2X technology.
— Copyright.
— Data connection.
— Units.
— Wireless charging for mobile devices.
— Configuration wizard.
— Mobile devices.
— Offline mode.
— Voice assistant.
— Language.
— System information.
— Time and date.
— Upgrades.
— Wi-Fi®.
— Additional keyboard languages.

Opening system settings

1. Open the app overview and tap ⚙.

Sound settings

The sound settings may contain information and setting options for equaliser, position, volume and settings.

Opening sound settings

1. Open the app overview and tap 🎚.

Adjusting the volume of external audio sources

If you need to increase the output volume of an external audio source, first lower the volume on the Infotainment system.

If the sound from the external audio source is too quiet, increase the output volume of the external audio source. If this is not sufficient, set the input volume to **Medium** or **Loud**.

If the sound from the connected external audio source is too loud or distorted, lower the output volume on the external audio source. If this is not sufficient, set the input volume to **Medium** or **Quiet**.

Introduction to the topic

In radio mode, you can receive available radio stations using different reception modes and store your favourites for quick access.

The available reception modes are dependent on the equipment level and are not available in all countries. Frequency bands and reception modes may be discontinued, deactivated or no longer offered in individual countries.

With some equipment levels and in some countries, you can also use Internet Radio *(→ Online functions, radio)*.

The radio stations are responsible for the content of the information sent.

Additional electrical devices connected in the vehicle can interfere with reception of the radio signal and cause noises in the loudspeakers.

Foil or metal-coated stickers on the aerial and windows may affect reception, especially in vehicles with window aerials.

Function descriptions

Selecting reception mode

Different stations are available depending on the reception mode. The available reception modes are dependent on the equipment level and are not available in all countries.

1. Tap ∨ to open the list of reception modes.
2. Select the reception mode, e.g. FM.

Searching for and selecting stations

You can search for and select stations in different ways. The possibilities vary depending on reception mode.

Searching for stations in SCAN mode

In SCAN mode, the stations of the reception mode are set automatically one after the other and played back for around 5 seconds. SCAN mode is possible only in the additional window in which the current playback content is displayed.

1. Tap ♫.
2. Tap **SCAN** to start the SCAN function.

   The SCAN function starts and the currently set station is shown on the display.
3. To select a station, tap **SCAN**.

   The SCAN function stops and the station is set.

Selecting stations using the multifunction steering wheel

You can select stations from the station list or from the favourites using the multifunction steering wheel.

— To select the previous station, press ⏮ on the multifunction steering wheel.

— To select the next station, press ⏭ on the multifunction steering wheel.

Selecting stations using the frequency band

1. Select reception mode AM or FM.
2. To open the frequency band, tap ⏚.
3. Tap the cursor, move on the frequency band and release at the desired frequency.

   Or: tap a point on the frequency band. The cursor automatically jumps to the corresponding frequency.

   The station at the set frequency is set.

Selecting stations from a station list

The station list shows the stations that can currently be received. The station list is updated automatically. Depending on country, the station list of the FM/DAB reception mode is set as the active station list with the factory settings and the stations in the list are sorted alphabetically.

1. Select the reception mode.
2. Tap the desired station.

   The selected station is set. The best reception mode is selected automatically according to availability of the station.

Changing the sorting order of the station list

The current sorting order of the stations is visible in the station list. The station list can be sorted alphabetically, according to group and according to genre.

1. Open the station list.
2. Tap ∨ next to the display of the current sorting order.
3. Select the desired sorting order.

   The selected sorting order is set.

Selecting a station and storing as a favourite

You can store up to 36 stations or frequencies from different reception modes as favourites.

Saving stations as favourites

1. Select the reception mode.
2. Set the desired station.
3. Tap ♡.

   Or: tap and hold a station in the station list.

   The memory locations are displayed.
4. Tap ⊕.

   Or: tap and hold the memory location already assigned until the station is stored.

   The station is stored in the selected memory location.

   If a station was already stored in the memory location, this station will be removed from the memory location and replaced by the new station.

Showing or hiding display of station logos and DAB slideshow

1. Tap ♫ and swipe from right to left.
2. Tap radio text in the display for the current playback.

Other functions in radio mode

The functions listed below depend on the equipment level and are only available in some countries.

Traffic Programme function (TP function)

The Traffic Programme function (TP function) monitors the traffic announcements from a set traffic news station for Traffic Programme monitoring and automatically outputs them during radio or media mode. Reception of a traffic news station must be possible and the TP function must be activated in the settings in order to receive traffic announcements → *Activating the TP function*. Traffic news stations are not available in all countries. Some stations that do not broadcast their own traffic news support the TP function through a corresponding traffic news station (EON).

Provided that a traffic news station can be received, a traffic news station is automatically set in the background in media mode.

No TP will be shown on the display if no traffic news station can be received. The unit automatically searches for a receivable traffic news station. As soon as a new traffic news station can be received, the status in the display changes to **TP** again.

Activating the TP function

1. In radio mode, tap ⚙ ▶ **Radio** and tap and activate **Traffic Programme (TP)**.

   Or: in media mode, tap ⚙ ▶ **Media** and tap and activate **Traffic Programme (TP)**.

Station logos

Station logos may be pre-installed for some frequency bands in the Infotainment system.

The station logos will be assigned automatically to the stations if **Autoselect station logos** is activated in the settings.

In Internet Radio mode, the Infotainment system accesses station logos from an online database and automatically assigns them to the stations.

Activating automatic assignment of station logos

1. In radio mode, tap ⚙ ▶ **Radio** and tap and activate **Automatically select station logo**.

Manually assigning station logos

1. In radio mode, tap ⚙ ▶ **Radio** ▶ **Station logos**.
2. Select the station to which you wish to assign a station logo.
3. Select the station logo.
4. Repeat the process for further stations if desired.
5. Tap ↩ to end assignment of station logos.

Switching to similar stations

If reception of a station becomes poor or drops completely, the system automatically switches to an alternative station depending on availability and reception quality, e.g. between neighbouring regional stations.

Activating switching to similar stations

1. Tap and activate ⚙ ▶ **Switch to a similar station if reception is poor**.

Additional DAB announcements

In addition to the messages from the TP function, you can also receive other announcements, e.g. on the weather, from the stations in DAB reception mode.

Activating additional DAB announcements

1. Tap and activate ⚙ ▶ **Additional DAB announcements**.

Functions and symbols

Functions

The functions and possible reception modes depend on the vehicle equipment and are not available in all countries.

— FM dual tuner (antenna diversity).

— Combined station list.

  — Combination of FM- and DAB stations in one list.

— Combined preset list for favourites.

— Display of station logos.

— Aerial amplifier.

— DAB/DAB+.

— DAB slide show.

  — Stationary images are transmitted parallel to the current broadcast.

— Internet Radio.

Symbols

The symbols depend on the equipment and are not available in all countries and may also differ in appearance depending on the Infotainment system.

General symbols

1. To open the main menu, open the app overview and tap ♫ ▶ 📻 *(→ Introduction to the Infotainment system)*.

FM Select FM reception mode.

FM/DAB Select FM/DAB reception mode.

Internet Radio Select Internet Radio reception mode.

Select frequency band or reception mode.

Open favourites.

Small in a station list: station already saved as a favourite.

Open the current playback content.

Mute radio.

Open frequency band for manual selection of the FM frequency.

Possible only if the combined station list is switched off in the settings in Radio mode.

Switch between radio and media mode.

My playlist.

Add station as favourite.

Select previous station from the station list or favourites.

Select next station from the station list or favourites.

Open the settings.

2 In the instrument cluster: station saved as a favourite. The number on the symbol indicates the position in the favourites, here, for example, position 2.

TP

Traffic Programme function (TP function) for traffic news monitoring is activated.

No TP

The selected traffic news station is not available.

AF Off

Automatic station tracking (AF) is deactivated.

RDS Off

The Radio Data System (RDS) is deactivated.

Symbols for FM and, depending on country, FM/DAB reception modes

No DAB reception possible.

DAB station supports slide show.

Slide show is not available for the DAB station.

Symbols in Internet Radio mode

Open full-text search.

No Internet Radio reception possible.

Open the most recently listened to Internet Radio stations.

Open the 100 most listened to Internet Radio stations.

Open available Internet Radio podcasts.

Open Internet Radio stations from the desired country.

Open Internet Radio stations that broadcast their programmes in the desired language.

Open Internet Radio stations whose programmes belong to the desired genre.

Open podcast episodes.

Open the station selection.

Open associated stations and podcasts.

Skip forward 15 seconds in podcast episode.

Skip back 15 seconds in podcast episode.

Online functions

With some equipment levels, the Infotainment system has online functions in radio mode.

Online functions in radio mode are not available in all countries and vehicle models.

The online functions in radio mode include Internet Radio, for example.

Prerequisites for using online functions in radio mode:

✓ The requirements for using the services have been fulfilled *(→ Online services)*.

✓ You have concluded a current contract for use of the services.

✓ You have ordered the service and activated it in your vehicle.

✓ There is an active internet connection via the Infotainment system .

✓ Streaming services may require an existing account with the relevant provider.

Internet Radio

Internet Radio is a reception mode for Internet Radio stations and podcasts which is independent of FM and DAB. Due to transmission via the internet, reception is not regionally restricted.

In some countries, functioning of Internet Radio depends on the privacy settings in the vehicle *(→ Privacy settings)*.

Searching for and filtering stations

In Internet Radio mode, it is possible to filter stations according to categories or search for stations by means of a full-text search.

1. Open the station selection.
2. Select the category according to which you wish to filter the stations.

   Or: tap ◯ to start the full-text search.

   The input field is displayed.
3. Enter the name of the station or category you want to search for.

   The list of found stations is automatically updated during input.
4. Tap the desired station.

Introduction to the topic

In media mode, you can play media files from data media on the Infotainment system and, depending on equipment, store your favourites for quick access.

With some equipment levels, the following data media can be used as a media source:

— USB data medium, e.g. USB stick.

— Bluetooth device, e.g. mobile telephone.

With some equipment levels, the following types of media files can be played back:

— Audio files, e.g. music.

— Video files.

Restrictions and notes on data media

Dirty, overheated or damaged data media may be unusable. Observe the manufacturer's instructions.

Differences in the quality of data media from different manufacturers can interfere with media playback.

Incorrect configuration of a data medium can render it unreadable.

The read time of data media can be increased by the storage capacity, usage state (copying and deletion processes), file system, folder structure, and the amount of stored data.

Playlists simply specify a playback sequence. They link to the location of the media files within the folder structure. There are no media files stored in a playlist. To play a playlist, the media files must exist in the locations on the data medium referenced by the playlist.

No liability can be accepted for damaged, modified or lost files on data media.

Playing a media file

Connecting and selecting a media source

1. Connect media source.
2. Tap **My media** and select the desired media source.

Searching for and playing media files

You can search for and play media files from a media source in various ways.

Searching in a selected media source

All media files on the connected media source can be found by means of a folder structure or by using the full-text search.

1. Open the folder structure.
2. Search through the folder structure for the desired track.

   Or: to start the full text search, tap ◯ and enter the name of the desired track.

   The list of found tracks updates itself automatically during input of the full text search string.
3. Tap the desired track.

   If the selection is located in a folder on a media source at the start of playback, the media files located in this folder will be added for playback.

   If a playlist is played, all available tracks in the playlist will be added for playback.
4. Close the selection with ✕.

Saving a media file as a favourite

Only media files that are saved to **My Media**, e.g. in the **Music** folder, can be stored as favourites. You can save individual tracks, albums, artists and genres.

1. Start playback of the desired track.
2. Tap ♡.
3. Tap ⊕.

   Or: tap an already assigned memory location and hold for around 3 seconds.
4. Make a selection from the list (e.g. a music track).

   The selection options in the selection list depend on the data attached to the media file. If no genre is specified for music files, for example, the genre cannot be saved as a favourite.

   The selection is saved as a favourite at the selected memory location. If the memory location was already assigned, the previously stored favourite is replaced by the selection.

Selecting a media file from favourites

1. Tap ♡.
2. Tap the desired favourite.

   Depending on the selected favourite, all tracks that belong to it are added to the current playback content.

Entertainment playback

Music can be played on the Infotainment system.

Depending on country, it is also possible to play videos.

Video mode

In video mode, the Infotainment system display can play a video from a data medium or from the internal memory.

The video soundtrack is played on the vehicle loudspeakers.

The video image is displayed only when the vehicle is stationary. When the vehicle is in motion, the Infotainment system display is switched off. The video audio can continue to be heard.

In some countries, no video image is displayed even when the vehicle is stationary for traffic safety reasons.

Functions and symbols

Functions

The functions and possible media formats depend on the vehicle equipment and are not available in all countries.

— Media playback and media control via Bluetooth.

— Audio playback in the following formats:

  — AAC.

  — APE.

  — M4A.

  — MP2.

  — MP3.

  — OPUS.

  — Vorbis.

  — WAV.

  — WMA.

— Video playback in the following formats:

  — MPEG-1 and MPEG-2 (.mpg, .mpeg, .mkv, .avi).

  — ISO MPEG-4 ASP; Xvid (.mp4, .m4v, .mov, .mkv, .avi).

  — ISO MPEG-4 AVC / H.264 (.mp4, .m4v, .mov, .mkv, .avi).

  — Windows Media Video 9 (.wmv, .asf, .mkv, .avi).

— Cross-device playlists.

— Cross-source media database: **My media**.

  — The data of all media sources connected to the Infotainment system is stored in a media database, **My media**.

  — If **My media** is selected, categories, e.g. music, and connected media sources are displayed first.

  — All media files of USB devices are filtered according to categories, e.g. albums. This category view is always displayed in **My media**. The classic folder structure of the individual USB data media is additionally located in the **My media** folder.

— Media search.

Symbols

The symbols depend on the equipment and are not available in all countries and may also differ in appearance depending on the Infotainment system.

General symbols

1. To open the main menu, open the app overview and tap ♫ ▶ ⊳ *(→ Introduction to the Infotainment system)*.

♫ Open the current playback content.

▷ Start playback.

|| Pause playback.

|◁ Go to previous track.

▷| Go to next track.

Repeat current track.

Repeat all tracks.

Activate shuffle mode.

∨ Top right: select media source.

Open search.

⊕ Add media file as favourite.

Open favourites list.

← Go back to higher-level folder of the media source.

Open the settings.

Symbols for media sources

My media: select the cross-source media database **My media** as the media source. Connected USB devices and their folder structure can be selected under **My media**.

Bluetooth: select a device connected via Bluetooth as the media source. Devices that are not yet connected via Bluetooth can also be selected and connected using this function.

Symbols for categories and groups of media files

Music tracks.

Videos.

Playlists.

Albums.

Artists.

Genres.

Podcasts.

Audio books.

Compilations.

Symbols for video playback

Play video in full-screen mode.

Minimise playback.

Introduction to the topic

The current vehicle position is determined by means of a global satellite system. To enable optimal navigation to the destination, all readings and possible traffic information are compared with the available map material. Acoustic navigation announcements and visual guidance direct the driver to the destination.

Depending on the country, some Infotainment system functions can no longer be selected when the vehicle is travelling above a certain speed. This is not a malfunction, but simply a legal requirement.

If you sell or loan the vehicle, Volkswagen recommends resetting the Infotainment system to the factory settings *(→ Introduction to the Infotainment system)*. This is the only way of deleting all personal data, e.g. information used for navigation. For further information, refer to the section on mobile online services (section availability is country-dependent) .

WARNING

Operating the navigation system can distract you from the road. Accidents and serious or fatal injuries can occur if the driver is distracted while the vehicle is in motion.

- Drive with your full attention and with responsibility.
- Only operate the Infotainment system when the vehicle is stationary or when the traffic situation permits.

The navigation may recalculate the route if the driver misses a turning.

The quality of the output navigation recommendations depends on the navigation data available and, depending on country, any reported traffic disruptions.

Depending on the vehicle and country, select online mode and a mode with location data in the privacy settings before using the mobile online services of the navigation system *(→ Privacy settings)*.

The corresponding prerequisites must be met to use mobile online services, e.g. depending on country, Online Traffic Information *(→ Online navigation function)*. Only then will Online Traffic Information be output in the navigation system, for example. If no Online Traffic Information is available, this is displayed in the Infotainment system *(→ Navigation)*.

Restrictions during navigation

When the Infotainment system cannot receive any data from GPS satellites, e.g. in a tunnel, navigation can still continue using the vehicle sensors.

In areas that are not or are not completely included in the Infotainment memory, the Infotainment system will also try to enable route guidance.

If navigation data is unavailable or incomplete, the navigation system may be unable to determine the exact vehicle position. As a result, the navigation may not be as exact as usual.

The course of the road is subject to constant changes, e.g. roadworks. In the case of obsolete navigation data, there may be errors or inaccuracies during navigation.

Function descriptions

Adapting the navigation map

For optimal viewing, you can also adapt the navigation map and map view with advanced finger gestures.

Moving the navigation map

Recommendation: use your index finger.

1. Use your finger to move the navigation map.

Enlarging or reducing the map view

Recommendation: use your index finger.

1. Tap the map twice in succession and keep your finger on the screen.
2. Move your finger downwards to zoom in on the map view.

   Or: move your finger upwards to zoom out from the map view.

Enlarging or reducing the map view

Recommendation: use thumb and index finger.

1. Using two fingers at the same time, tap the map and keep your fingers on the screen.
2. Move your fingers apart to zoom in on the map view.

   Or: move your fingers together to zoom out from the map view.

Tilting the map view

Recommendation: use your index and middle finger.

1. Using two fingers that are horizontal to each other at the same time, tap the map and keep your fingers on the screen.
2. Move your fingers upwards to tilt the map view forwards.

   Or: move your fingers downwards to tilt the map view backwards.

Rotating the map view

Recommendation: use thumb and index finger.

1. Using two fingers at the same time, tap the map and keep your fingers on the screen.
2. Turn your fingers clockwise or anticlockwise to rotate the map view.

You can also zoom the map view in and out using the touch slider for volume adjustment *(→ Introduction to the Infotainment system)*.

Home and work address

Saving a home or work address

This is only possible if no home or work address has been specified.

1. Tap 🔍 ▶ **Favourites**.
2. Tap **Home** or **Work**.
3. To save the current position, tap **Use position** or **Position**.

   Or: to save an address, tap **Set new** or **New address**.

Deleting a home or work address

1. Tap 🔍 ▶ **Favourites**.
2. Tap and hold the saved home address or work address and swipe left.
3. Tap 🗑.

Favourite destinations

Save up to 50 destinations as favourites.

Saving a destination as a favourite

1. When entering a destination, tap ♡ in the additional window.

Deleting favourites

1. Tap 🔍 ▶ **Favourites**.
2. Tap on a favourite, hold and swipe left.
3. Tap 🗑.

Navigation announcements

Navigation announcements are acoustic driving instructions for the current route. The type and frequency of navigation announcements depends on the settings and the driving situation, e.g. start of route guidance, driving on a motorway or in a roundabout.

A navigation announcement informing you that you have reached the destination area is given if the exact destination cannot be reached, e.g. because it is located in a non-digitised area. In addition, notes on the direction and distance to the destination are displayed on the screen.

Depending on equipment and in some countries, information on reported traffic disruptions on the route is provided during dynamic traffic avoidance. An additional navigation announcement is given if the route is recalculated due to a traffic disruption or changed driving style.

The volume of a navigation announcement can be adjusted or muted during output of the announcement. All other navigation announcements are given with this volume setting or are muted. Further settings for the navigation announcements can be found in the settings of the navigation system *(→ Navigation)*.

Repeating a navigation announcement

If you have missed a navigation announcement, you can have the navigation announcement repeated.

1. Tap the function button with the next route information on the map.

ℹ Navigation announcements are not given if the Infotainment system has been muted.

Route plan

The route plan contains your route and possible stopovers. Destinations and stopovers can be defined in sequence, moved or deleted. The starting point is always the vehicle position determined by the Infotainment system. The route plan contains information on relevant events, such as stopovers and suggested destinations, if navigation data is available. When you tap an event, an additional window opens with further options. The options available depend on the event and the current settings.

Opening and closing the route plan

1. To open the route plan, tap the preview of the route plan on the right of the map.
2. To close the route plan, tap | on the right of the map.

Editing route guidance in the route plan

To edit route guidance, move the stopovers or the destination in the route plan.

1. Tap and hold the desired destination until it is visibly highlighted.
2. Move the destination to the desired position and release.

   The route will be recalculated.

Stopping route guidance in the route plan

1. To stop route guidance to the destination, tap ⊗ on the right of the map in the route plan preview.

   Or: to stop route guidance to the destination or stopover, open the route plan, swipe to the left on the destination or stopover in the route plan and tap 🗑.

Additional window on the route plan

If you tap the entries of the route plan, an extra window with additional options can appear. The possible options depend on the entry tapped.

Functions in the additional window:

Display on map
Display the selection on the map.

Direct route
Start direct route guidance.

Add stopover
Add a stopover to the route guidance.

Delete
Delete stopover from route guidance.

Bypass
Avoid a traffic disruption. The route will be recalculated.

Stop route guidance
End the current route guidance.

Closing the additional window on the route plan

1. Tap a free area outside the additional window.

Setting preferred POI categories

The system offers various points of interest, e.g. filling stations, as quick selection symbols in the destination input, in the route plan and on the map. You can prioritise the display of these symbols.

1. Tap ⚙ ▶ **Basic functions** ▶ **Set preferred POI categories**.

Learning usage patterns

While travelling, the navigation saves the routes travelled and destinations arrived at in order to create suggested destinations automatically. Destinations are learned depending on the time of day and the day of the week.

The navigation system can suggest learned routes. Route guidance begins when one of the suggested routes is selected.

The route guidance follows the selected route until the vehicle deviates from it. The route is recalculated and will guide you back to the selected route via a direct alternative.

Relevant traffic disruptions are taken into account in the route guidance. Relevant traffic disruptions will be avoided if an alternative route and the navigation data is available.

If you drive an already learned route when route guidance is inactive, the destination will be transferred to the route plan. It is not necessary to actively start route guidance to the learned destination. Warnings may be given about traffic disruptions and a forecast arrival time will be displayed.

You can activate or deactivate the function at any time and also delete the stored data for the function.

Activating or deactivating “Learn usage pattern”

1. Tap ⚙ ▶ **Basic functions** to open the settings for this function.
2. Tap and activate **Learn usage pattern**.

Displaying suggested routes

1. Tap 🔍 ▶ **Suggested**.

Deleting stored data for “Learn usage pattern” function

1. Tap ⚙ ▶ **Basic functions** to open the settings for this function.
2. Tap **Delete usage pattern**.

Stored data

The Infotainment system stores certain data, e.g. frequently driven routes, so that you can enter destinations quickly and enjoy the most efficient route guidance.

Deleting stored data

1. Tap ⚙ ▶ **Basic functions** ▶ **Delete usage pattern**.
2. Tap confirmation to delete.

Functions and symbols

Functions

The navigation functions depend on the equipment and are not available in all countries.

— Destination input and route calculation.

— Personal POIs.

— 3D City Maps.

— Online Map Update.

— Online Traffic Information.

— Range.

Symbols

The symbols depend on the equipment and are not available in all countries.

General symbols

1. To open the main menu, open the app overview and tap △ *(→ Introduction to the Infotainment system)*.

Destination search: enter and search for destinations.

Open navigation map.

Open saved addresses or, where applicable, contact list of the connected mobile telephone.

Open the settings.

You can find settings for the navigation announcements here, for example.

Map symbols

The function buttons and displays depend on the settings and the current driving situation.

Depending on country, symbols for POIs and traffic information, e.g. traffic disruptions, are displayed on the map if the navigation data is available *→ Functions and symbols (→ Online navigation function)*.

Current position.

Tap to centre the map on the vehicle or to display details of the vehicle position.

Map scale.

Determine map orientation and tilt.

Fully automatic map mode.

Alignment in direction of travel, position, zoom and tilt.

If route guidance is active: display route overview and alternative routes for current route guidance.

Example of a traffic disruption on the map, here a traffic jam.

Route plan symbols

Current position.

Destination of the current route guidance.

Forecast distance to the destination.

Tap to switch to the display of the estimated time of arrival at the destination or remaining time to the destination.

Estimated time of arrival at the destination.

Tap to switch to the display of the estimated remaining time to the destination.

Estimated remaining time to the destination.

Tap to switch to the display of the estimated time of arrival at the destination.

Close the route plan.

Other symbols

In the route overview: open information on the route.

In the route overview: display route options with active route guidance.

In the additional window: show route overview. Does not start route guidance directly, but first shows details of the route and alternative routes.

In the additional window: save as favourite.

In the destination search: open detailed destination input for an address. In the contact list: open address.

Work (company).

Home (private).

Range.

No Online Traffic Information available.

Charging station symbols

E-charging stations, also referred to just as “charging stations” below, are displayed on the map when navigation data is available.

1. Tap the required charging station to start route guidance *(→ Navigation)*.

Charging station on the map.

Open search for charging stations.

Open filter/preference settings for displaying charging stations on the map.

The symbol changes when a filter is active.

Current availability of the charging station.

Red status: charging station is occupied or out of order.

Green status: charging station is free and available.

2 Number of planned charging stops on the overall route, in this case two, for example.

Charging time at the charging station.

Forecast charge level of the high-voltage battery at the destination.

High-voltage battery charge level required to continue driving.

Traffic disruptions

Traffic disruptions are displayed on the map when navigation data is available *(→ Online navigation function)*. Example of a traffic disruption on the map: for traffic jam. Depending on country, “Online Traffic Information” must be activated to display the mobile online service. Depending on equipment, the following symbol is displayed if no Online Traffic Information is available: .

Opening details of traffic disruptions

1. Tap .
2. Tap a traffic disruption to open an additional window showing details *(→ Navigation)*.

Entering a destination and starting route guidance

Depending on equipment and in some countries, different functions are available for destination input. You can more precisely limit the search by indicating preferences in the results list, such as “nearby”.

Further information about the symbols on the Infotainment system display can be found in this owner’s manual *(→ Navigation)*.

Entering an address

Start route guidance by entering an address. The navigation system will suggest known destinations during input.

When entering an address, enter the name of the destination instead of the postcode.

Selecting a destination and starting navigation

1. Tap .

   Or: tap .

2. Enter the address of the destination and select the desired destination.
3. Tap **Start**.

   Or: tap .

Quick start

1. Tap .
2. Enter the address of the destination and tap and hold the desired destination for a few seconds.

Enter the destination as accurately as possible. If you make a mistake when entering the destination, route guidance will not be possible or you may be navigated to the wrong destination.

Selecting home and work addresses

Selecting a destination and starting navigation

1. Tap ▶ **Favourites**.
2. Tap **Home** or **Work**.
3. Tap **Start**.

Selecting from destination suggestions

The navigation system uses stored data such as the last and learned destinations, favourites, and home and work addresses so it can use this data for route guidance.

Selecting a destination and starting navigation

1. Tap ▶ **Suggested**.
2. Tap the desired destination.

   The route overview opens.

3. Tap the desired selection and hold for a few seconds.

Selecting from last destinations

The navigation system stores up to 25 destinations that you have driven to last in order to make them available for route guidance. A new destination automatically overwrites the oldest destination.

Selecting a destination and starting navigation

1. Tap ▶ **Last destinations**.
2. Tap the desired destination.
3. Tap **Start**.

   Or: tap .

Quick start

1. Tap ▶ **Last destinations**.
2. Tap the desired destination and hold for a few seconds.

Selecting from favourite destinations

Selecting a destination and starting navigation

1. Tap ▶ **Favourites**.
2. Tap the desired destination.
3. Tap **Start**.

   Or: tap .

Quick start

1. Tap ▶ **Favourites**.
2. Tap the desired destination and hold for a few seconds.

Using the address data of a contact

Start navigation using the stored address data of a contact. Stored contacts without address data cannot be used for route guidance.

Starting navigation

1. Tap .
2. Tap the desired contact with address data.
3. Tap **Start**.

   Or: tap .

If the address details of a contact are out-of-date, the stored address will be used for route guidance and may lead to the wrong destination.

— When starting route guidance, make sure that the stored address of a contact is up-to-date. For this, the update of the phone book in the Infotainment system must be fully completed *(→ Mobile phone interface)*.

— Wait until the update of the phone book in the Infotainment system is fully completed *(→ Mobile phone interface)*.

Selecting on the map

The navigation map contains interactive areas in many places that are suitable for destination input. To enter a destination, tap the desired position or location on the map. You can start route guidance if map data is available at this location.

Destination input via the navigation map depends on the data status and is not possible for all positions.

Adjusting the range and Electric Vehicle Route Planner

Range

The “Range” function shows the possible range with the current charge level of the high-voltage battery. The display shows only an estimated range calculated on the basis of the current consumption figures. The display may change during the journey, and peripheral areas must also be understood as an estimate *(→ Charge level display and range)*.

Activating or deactivating the “Range” function

1. Tap and activate ⚙ ▶ **Electric Vehicle Route Planner** ▶ **Show range on map**.

To show the complete range on the map, you may need to adjust the map view *(→ Navigation)*.

A range warning can also be activated in the navigation settings: tap and activate ⚙ ▶ **Route guidance & routes** ▶ **Range warning**.

Electric Vehicle Route Planner

Charging stations can be automatically added as charging stops along the current route using the Electric Vehicle Route Planner. A maximum of ten charging stations can be automatically added as charging stops.

Activating or deactivating the Electric Vehicle Route Planner

1. Tap and activate ⚙ ▶ **Electric Vehicle Route Planner**.

Charging stops can be added and set with different preferences:

— Payment method.

— Remaining range at the charging stop and at the destination.

Defining preferences

1. Tap ⚙ ▶ **Electric Vehicle Route Planner**.
2. Set the desired remaining range.

   Or: set the desired payment method.

Depending on the selection and the available data, suitable charging stations will be prioritised in the route plan.

If your preferred payment method is not available at one or more charging stations, an acoustic message will be played.

The settings for the upper battery charge limit in the **Charging** menu may be overwritten temporarily by the "Electric Vehicle Route Planner" function *(→ Charging settings)*. The settings for the upper battery charge limit in the **Charging** menu will be used again after route guidance has been ended.

The current occupancy status of the charging stations is displayed in the Infotainment system when an internet connection is available *(→ Navigation)*. The current status is indicated by a coloured dot at the edge of the edge of the symbol.

Adding charging stops automatically

1. To activate automatic planning of necessary charging stations on the route, tap and activate ⚙ ▶ **Electric Vehicle Route Planner** ▶ **Add charging stopovers automatically**.

Selecting alternative charging stations

Instead of the automatically planned charging stations, you can also select alternative charging stations for the planned routes.

1. Enter or select the desired destination.
2. Tap **Start**.
3. Open the route plan *(→ Navigation)*.
4. Tap a planned charging station in the route plan.

   Details of the planned charging station are displayed.
5. Tap **Show more charging stations**.

   The locations of additional nearby charging stations will be shown on the map.
6. Tap an alternative charging station nearby on the map or in the list.

   Details of the alternative charging station are displayed.
7. Tap **Add as stopover**.

   The previously planned charging station will be replaced by the newly selected charging station and the route adjusted accordingly.

If you select **Add as stopover**, the selected charging station will be kept if the route is changed.

Search for charging stations using filter

You can set various criteria when searching for charging stations on the map and in the search results for the “Charging station” category. Setting these criteria affects the map display. Only charging stations that meet the criteria will be displayed. The search results in the “Charging station” category are filtered according to the selected criteria. You can change the criteria again at any time. An active filter does not have any influence on route planning. Adapt the settings if you want to take charging stops into account in route planning → *Adjusting the range and Electric Vehicle Route Planner*.

Filtering charging stations

1. Tap .
2. Select a criterion, e.g. payment method.

The symbol changes when a filter is active.

Navigation data

The Infotainment system has an internal navigation data memory. Depending on the country, the required navigation data is already pre-installed.

In order to carry out route guidance correctly and make full use of the functions offered, the Infotainment system always requires up-to-date navigation data.

NOTICE

If you use obsolete data, navigation may be impaired. Current routes cannot be determined or route guidance leads to the wrong destination.

- Always keep navigation data up-to-date.

Online navigation data – expansion

Regions in the navigation data that are not used by the user may be removed from the system under certain circumstances, for example if there is limited memory space in the navigation data memory. If these regions should be needed again at a later point in time, the navigation system will download them again on request. No contract for mobile online services is needed for this. The service depends on the vehicle equipment and is available only in some countries.

1. Switch on the ignition.
2. Establish an internet connection, if this does not already exist.
3. Depending on the country, also select “Online mode with location data” in the privacy settings *(→ Privacy settings)*.

Anyone who uses the vehicle as an anonymous guest must reset the privacy settings each time they start the vehicle *(→ Privacy settings)*.

Updating navigation data manually

Current navigation data for larger regions, e.g. Western Europe, can be downloaded from the internet at www.volkswagen.com and stored on a suitable USB data medium available commercially. If you switch off the Infotainment system, installation will be interrupted and will automatically continue once the unit is switched on again.

1. Download the navigation data and save on a USB data medium.
2. Switch on the vehicle ignition.
3. Connect a USB data storage device to the Infotainment system when the vehicle is stationary.

   The navigation data for regions that are currently frequently travelled is automatically updated in the background.

No message appears in the Infotainment system while the navigation data is being updated, or once the update is complete.

When you update navigation data manually, the USB data medium must remain continuously connected. No message appears to indicate that the update has been completed.

Leave the USB data storage device connected to the Infotainment system for a few days until the navigation data for travelled regions has been completely downloaded and installed. Installation takes place automatically in the background while driving. Failure to do so will cancel the update.

If you remove the USB data medium and travel through a new region in offline mode, the navigation data will not be updated as there is neither a USB data storage device nor an internet connection.

Displaying map data version

1. Open the app overview and tap ⚙ ▶ **Information** ▶ **System information**.

Online functions

Online functions of the navigation system are available depending on the equipment and in some countries. Online functions are not available in all vehicle models.

Online functions include, for example, Online Traffic Information.

Online Traffic Information

Reception of Online Traffic Information depends on the vehicle equipment and is not available in all countries. The Infotainment system automatically receives detailed traffic information when connected to the internet. This information is indicated by symbols and colouring of the road network on the map *(→ Navigation)* → *Traffic flow display*.

Reception of Online Traffic Information depends on the privacy settings in some countries. No Online Traffic Information is received in offline mode *(→ Privacy settings)*.

Prerequisites for using Online Traffic Information:

✓ The requirements for using the services have been fulfilled *(→ Online services)*.

✓ You have ordered the service and activated it in your vehicle.

✓ Depending on the country, online mode and a mode with location data are selected in the privacy settings *(→ Privacy settings)*.

Traffic disruptions

Traffic disruptions, e.g. traffic jams, are shown as symbols on the navigation map *(→ Navigation)*.

The route plan displays current traffic disruptions when navigation data is available.

When route guidance is active, traffic disruptions that are on the current route are displayed in the route plan. You can bypass these traffic disruptions by editing the route plan.

Bypassing a traffic disruption

1. Open the route plan *(→ Navigation)*.
2. Tap the traffic disruption.
3. Tap **Bypass**.

   The route will be recalculated.

Only one traffic disruption can be bypassed in this way for each route.

Local warnings, e.g. about severe weather, can be output as a pop-up message via the Infotainment system.

Traffic flow display

The traffic flow is shown on the navigation map for current traffic disruptions by colouring of the road network.

Orange

Slow-moving traffic.

Red

Traffic jam.

Introduction to the topic

You can connect your mobile telephone to the Infotainment system via the mobile phone interface and then use the Infotainment system to control the telephone functions. Sound is played back using the via the vehicle loudspeakers. Depending on equipment, you can connect up to two or three mobile telephones to the Infotainment system simultaneously *(→ Mobile phone interface)*.

Functions depend on the equipment and are not available in all countries – and depend on the mobile phone used and its operating system.

High speeds, poor weather and poor road conditions, loud noise levels, also outside the vehicle, and network quality may impair telephone calls in the vehicle.

The mobile phone interface may contain an aerial amplifier which improves the reception quality of the mobile telephone.

As a general rule, it is only necessary to pair a device, e.g. mobile telephone, once for each technology, Bluetooth or Wi-Fi. The device connection to the Infotainment system via Bluetooth or Wi-Fi can be restored at any time without having to pair the device again.

When a telephone call is made using the hands-free system or at a loud volume, a conversation can also be heard by third parties outside the vehicle.

During a telephone call, the volume of the call can be adjusted using the volume control *(→ Introduction to the Infotainment system)*.

Areas where special regulations apply

Switch off the mobile telephone and mobile phone interface in areas where there is an explosion hazard. These areas are not always clearly signposted. This includes, for example:

— Areas immediately around chemical pipelines and tanks.

— Lower decks of ships and ferries.

— The area around vehicles which run on liquid gas, such as propane or butane.

— Places where there are chemicals or particles such as flour, dust and metal powder in the air.

— All other places where the vehicle's drive system must be deactivated or the mobile telephone switched off.

WARNING

In places where there is a risk of explosion, e.g. near filling stations, and in places with special regulations, ignition sparks, e.g. caused by electrostatic discharges or mobile phones, can lead to an explosion or fire and cause serious or fatal injuries.

- Switch off the mobile telephone and mobile phone interface in potentially explosive areas, e.g. near filling stations, and in locations where special guidelines apply.
- Do not operate the mobile telephone and mobile phone interface in potentially explosive areas, e.g. near filling stations, and in locations where special guidelines apply.

Types of mobile phone interface

Depending on the country and vehicle equipment, the following mobile phone interface types may be present in your vehicle:

— Basic equipment of the mobile phone interface.

The mobile phone interface uses the Bluetooth Hands-Free Profile (HFP) for transmission. This profile allows use of telephone functions via the Infotainment system and output via the vehicle speakers. If a mobile telephone is connected to the mobile phone interface via the Bluetooth profile HFP, you can make calls wirelessly via the hands-free system.

— Comfort mobile phone interface.

The Comfort mobile phone interface uses the HFP Bluetooth profile like the basic version of the mobile phone interface.

The Comfort mobile phone interface may be equipped with a wireless charging function *(→ Charging options for mobile devices)*. In order to use the wireless charging function, you must place a suitable mobile telephone correctly in the stowage compartment for the wireless charging function *(→ Charging options for mobile devices)*.

Pairing, connecting and managing

Pair and connect a mobile telephone with the Infotainment system in order to use the functions of the mobile phone interface. Depending on equipment, you can connect up to two or three mobile telephones to the Infotainment system simultaneously. In this case, only one mobile telephone is active and can be used to make calls. You can use the second connected mobile telephone to receive calls via the Infotainment system and for media playback. If three mobile telephones are connected, the third mobile telephone can be used for media playback.

Depending on the equipment and country, the functions listed below may not be available. The available functions depend on the mobile telephone used and its operating system.

Depending on equipment, the functions are available only for mobile telephones that support Bluetooth in Version 2.1 or higher.

Pairing a mobile telephone

The mobile telephone must be paired with the Infotainment system before the first connection is established. A user profile for the device is automatically saved in the Infotainment system *(→ Mobile phone interface)*. The pairing process can take a few minutes. Depending on equipment, the mobile telephone must support the current security standards of Bluetooth technology for pairing. Pairing will be rejected if this is not the case.

1. Activate Bluetooth and visibility for Bluetooth devices on the mobile telephone.
2. Pair the mobile telephone with the vehicle via the Bluetooth interface *(→ Bluetooth)*.
3. If necessary, open the list of available Bluetooth devices on the mobile telephone and select the device name of the Infotainment system.
4. Observe the messages on the mobile telephone and Infotainment system and confirm as necessary.

   If pairing was successful, the data of the mobile telephone will be stored in the user profile.

⚠ WARNING

Pairing a mobile device, e.g. a mobile telephone, can distract you from the traffic situation. Accidents and serious or fatal injuries can occur if the driver is distracted while the vehicle is in motion.

- Drive with your full attention and with responsibility.
- Carry out pairing as the driver only when the vehicle is stationary.

With the factory settings, Bluetooth and visibility for Bluetooth devices are always activated. If you want to deactivate these settings, tap ⚙ ▶ **Select mobile telephone** ▶ ⚙ and tap and activate **Bluetooth** and **Visibility**.

When some mobile telephones are paired, a PIN is shown on the display of the mobile telephone. To finish the pairing procedure, enter this PIN on the Infotainment system.

Connecting a mobile telephone

1. Pair the mobile telephone with the Infotainment system → *Pairing, connecting and managing*.
2. Observe the messages on the mobile telephone and Infotainment system and confirm as necessary.

If the connection is not established automatically, tap ⚙ ▶ **Select mobile telephone** and tap the name of the desired mobile telephone.

Function descriptions

User profile for the device

An individual user profile is automatically created for the device for every paired mobile telephone. Data from the mobile telephone is stored in the user profile, e.g. contact details. A maximum of ten user profiles can be stored in the Infotainment system simultaneously.

Deleting a user profile

1. Open the app overview and tap ⚙ ▶ **Mobile devices**.

   Or: tap 📞 ▶ ⚙ and tap the desired user profile.

2. Tap 🗑.

Active and passive connection

At least one mobile telephone must be connected to the Infotainment system in order to use the functions of the mobile phone interface. If several mobile telephones are connected to the Infotainment system, you can switch between active and passive connections. Establish an active connection to the Infotainment system in order to operate the mobile phone interface with the desired mobile telephone.

Paired mobile telephones are stored in the Infotainment system even if they are not currently connected.

Difference between the connection types

Active

Mobile telephone is paired and connected. The functions of the mobile phone interface are performed with the data of this mobile telephone.

Passive

Mobile telephone is paired and connected. Only incoming calls can be accepted via the mobile phone interface. No other functions are available.

Changing the connection type (passive to active)

Prerequisite:

✓ Several mobile telephones are connected to the Infotainment system simultaneously.

1. Tap ∨.

   The mobile telephone with an active connection is highlighted.

2. Tap the name of the mobile telephone you require.

   Other mobile telephones then automatically have a passive connection.

Managing connections

Prerequisite:

✓ The mobile telephone is paired and connected.

1. Open the app overview and tap ⚙ ▶ **Mobile devices**.
2. Tap the technology desired for the connection.

Telephone book

The telephone book is stored in the Infotainment system when a mobile telephone is paired with the Infotainment system for the first time. It may be necessary to confirm transfer on the mobile telephone. Depending on equipment, up to 5,000 contact entries can be stored in the telephone book. The telephone book is updated each time the mobile telephone is connected to the Infotainment system. The still existing telephone book can be used during the update. A pop-up appears if changes have been detected in the telephone book and the update of the telephone book in the Infotainment system has been fully completed.

If conference calls are supported by the mobile service provider and the mobile telephone, the telephone book can be opened during a call and a further participant added to the call.

If an image is stored for a contact, this can also be displayed in the list next to the entry.

Using the telephone

Select a telephone number to start the call. Different functions are available for selecting a phone number.

Using contact data

If there are several phone numbers for each contact, you must select the phone number you require.

1. Tap .
2. Tap and enter the name of the contact to search for a contact.

   Or: tap **Favourites** to call a favourite.

   Or: tap **All**.
3. Tap the desired contact in the list to start the call.

When searching for a contact, enter the surname and first name separated by a space.

Using the call list

The mobile phone interface stores incoming and outgoing calls in the call list. Frequently used phone numbers are stored as favourites. Start calls via the call list.

1. Tap and filter entries in the call list, e.g. missed calls.
2. To start the call, tap a number or, where applicable, a contact in the list.

Entering a phone number manually

1. Tap and enter a phone number.
2. Tap to start the call.

While you are entering a phone number or a contact name, contacts that match the number will be shown on the Infotainment system display.

Favourites

A contact from the telephone book can be saved as a favourite. If an image is stored in the entry, this will be displayed in the memory location for the favourite.

Favourites must be added manually and are assigned to a user profile *(→ Mobile phone interface)*.

Saving a contact as a favourite

1. Tap **Favourites** ▶ ⊕.
2. Tap a contact from the telephone book. If several telephone numbers are stored for a contact, tap the required number in the list.

Editing favourites

1. Tap **Favourites**.
2. Tap and hold the memory location until the telephone book opens.
3. Tap a new contact from the telephone book. If several telephone numbers are stored for a contact, tap the required number in the list.

Calling a favourite

1. Tap **Favourites**.
2. Tap an assigned memory location.

Favourites are not automatically updated. If the phone number of a contact changes, the memory location must be assigned again.

Deleting favourites

1. Tap **Favourites** ▶ ✎.
2. Tap 🗑 at the desired memory location.

Sending and receiving text messages

Depending on the mobile telephone and the Infotainment system used, you can send and receive Text message text messages and emails via the mobile phone interface in some countries.

The ability to send and receive emails also depends on the app being used on the mobile telephone.

Sending text messages

1. Tap ✉ ▶ **Text message** ▶ **New message** and enter the message.
2. Enter and tap the desired contact in the search bar.
3. Tap **OK** to send the message.

Sending emails

1. Tap ∨ ▶ **E-Mail** and enter the message.
2. Enter and tap the desired contact in the search bar. If necessary, you can search for a contact using **Search for contact**.
3. Tap **OK** to send the message.

Switching between text messages and email

Activate the corresponding option to send Text message or emails. The active option is displayed on the screen, e.g. **Text message**.

1. Tap ✉.
2. Tap the required option.

Functions and symbols

Functions

The functions are dependent on the equipment level and are not available in all countries. The available functions depend on the mobile telephone used and its operating system.

— Hands-free function.

— Text message functions via Bluetooth:

  — Read Text message.

  — Write an Text message, including templates.

  — Have Text message read out loud.

  — Message history.

— Email functions via Bluetooth:

  — Read emails.

  — Write emails.

Symbols

The symbols depend on the equipment and are not available in all countries and may also differ in appearance depending on the Infotainment system.

General symbols

1. To open the main menu, open the app overview and tap *(→ Introduction to the Infotainment system)*.

Opens the contact list of the connected mobile telephone.

Open call lists of incoming and outgoing calls and the list of frequently used numbers or contacts.

Open the favourites and list of frequently used numbers and contacts from the actively connected mobile telephone if this is supported by the mobile telephone.

Dial phone number.

Open text messages Text message and email, depending on country.

Select the active device from two or more connected mobile telephones.

Open the settings.

Symbols for phone calls

Start, answer and display call.

End or reject call.

Mute hands-free system.

Hold call.

Reject call with Text message template.

Add a participant to a conference or merge calls and start conference.

Make emergency call (SOS).

Obtain help in the event of breakdown.

Voicemail.

Obtain information about the Volkswagen brand and selected value-added services relating to traffic and travel.

Symbols in the contact list

1. Tap to open the contact list.

Input to search for contacts.

Address.

Edit favourites.

Add favourites.

Remove favourites.

Symbols for call lists

1. Tap to open the call lists.

Incoming call.

Outgoing call.

Missed call.

Frequent calls or favourites from the mobile telephone, if supported by the mobile telephone.

Phone number (work).

Phone number (private).

Mobile telephone number.

Symbols for text messages

1. Tap ✉ to open the text messages.

Top left: select active input.

Received text message.

Sent text message.

Open template for text messages.

Compose text message by voice.

Open further options, e.g. display number.

Introduction to the IDA voice assistant

You can use the IDA voice assistant to operate certain functions and retrieve information by means of voice commands.

Is my vehicle equipped with the IDA voice assistant?

If your vehicle is equipped with the voice assistant, you will find the corresponding app in the Infotainment system: **IDA** *(→ Introduction to the Infotainment system)*.

Test the voice assistant before starting a journey in order to familiarise yourself with the function.

Information on the IDA voice assistant symbols can be found under **IDA** ▶ **Tips** ▶ **Basic functions**.

Features of the IDA voice assistant

Depending on the set language and country, the voice assistant is available offline or online in the Infotainment system.

Depending on the set language in the Infotainment system, voice commands can be formulated freely and may use colloquial language. Depending on the system language, the statement "I'm cold" will lead to the temperature in the vehicle being increased, for example. Depending on the system language, voice commands that are evaluated online permit optimised searches for points of interest or requests relating to various categories, e.g. the weather.

In some system languages, the voice commands must be formulated according to a certain pattern in order to guarantee recognition, e.g. "Navigate to [*Town, Street name, House number*]".

The number of languages available in your country depends on the country in question.

You can see whether the voice assistant is online on the welcome page of the IDA app. For this, tap **IDA** ▶ ⓘ.

Activation word and voice commands

Activation word

The spoken words are analysed continuously in the vehicle and overwritten after around 15 seconds. The voice assistant is started as soon as the Infotainment system recognises the activation word as part of this analysis. If the voice assistant is available online and activated, (voice) data is also transferred from the vehicle as from this time. Otherwise there is no transmission of data or words spoken in the vehicle.

Recognition of the activation word can be deactivated in the settings.

The IDA voice assistant recognises “Hello ID.” and also “Hello IDA” as activation words if they are activated in the settings. You can create your own activation word in the IDA app → *Activation word and voice commands*.

“Hello ID.” is used as an example for the activation word in the following.

BG Здравей ID.

CZ Ahoj ID.

D Hallo ID.

DK Hej ID.

E Hola ID.

F Bonjour ID.

FIN Hei ID.

GB Hello ID.

GR Γεια σου ID.

I Ciao ID.

N Hallo ID.

NL Hallo ID.

P Olá ID.

PL Cześć ID.

RUS Привет ID.

S Hej ID.

TR Merhaba ID.

USA Hello ID.

Displaying the activation word

You can also find the activation word for your language in your IDA app.

1. Tap **IDA** ▶ **Activation**.

Activating or deactivating the activation word

If the activation word is deactivated, the voice assistant cannot be started by means of the activation word.

1. Tap **IDA** ▶ **Activation** ▶ **Activate IDA with voice control** and activate or deactivate.

Personalising the activation word

Observe the information under **IDA** ▶ **Activation** ▶ ⓘ.

1. Tap **IDA** ▶ **Activation**.
2. Tap **Set your own activation word**.

Voice commands

The voice assistant recognises only voice commands in the language set in the Infotainment system.

Opening suggested voice commands

The suggestions may vary depending on the set language or due to online mode.

1. Tap **IDA** ▶ **Tips**.

Starting and ending the voice assistant

Starting the voice assistant

1. Activate the **Activation word** in the IDA app *(→ Voice assistant)*.
2. Say the activation word *(→ Voice assistant)*.

   Or: press on the multifunction steering wheel.

Ending the voice assistant

1. To open suggestions for a voice command to end the voice assistant, tap **IDA** ▶ **Tips** ▶ **Basic functions**.

   Or: press on the multifunction steering wheel.

The voice assistant is ended automatically in the following cases:

— When you use functions in the Infotainment system.

— When you activate the parking system.

— When phone calls are received.

— When voice outputs occur.

If the Voice Enhancer *(→ Introduction to the Infotainment system)* is activated, this affects recognition of the activation word for the voice assistant. In this case, start the voice assistant via the multifunction steering wheel *(→ Voice assistant)*.

Troubleshooting

Voice assistant does not react

— The voice assistant is not available in your language.

— Set the correct system language in the Infotainment system.

— Say the correct activation word for the system language set in the Infotainment system.

— Check the activation word in the settings and activate and adapt it if necessary.

— Restart the Infotainment system *(→ Introduction to the Infotainment system)*.

Voice assistant gives inappropriate answers

— The voice assistant has interpreted the question incorrectly.

— Say the voice command again clearly.

— Formulate the voice command in another way.

Voice assistant does not perform function

— The function cannot be performed using the voice assistant.

— The function cannot be performed in all languages. Suggestions for voice commands in the set language can be found in the Infotainment system.

— Settings made within the respective function prevent it from being switched on or executed.

— Formulate the voice command in another way.

Introduction to the topic

App-Connect enables the user to display and operate content and functions from the mobile telephone on the Infotainment system screen. For this, the mobile telephone must be connected to the Infotainment system using a USB interface with data transfer function. Some technologies can also be used wirelessly with App-Connect Wireless via the Bluetooth interface and the Wi-Fi® hotspot of the Infotainment system.

Technologies

The following technologies may be available:

— Apple CarPlay®.

— Apple CarPlay® Wireless.

— Android Auto®.

— Android Auto® Wireless.

The above-named technologies are operated by third parties and are not made available by Volkswagen. Volkswagen is not responsible if these technologies are terminated, discontinued or deactivated during the service life of the vehicle. There may be problems with compatibility with third-party apps. We are unable to guarantee that the available apps can be run on all mobile telephones and all operating systems.

The availability of the App-Connect technologies is country-dependent and may vary according to the mobile telephone. A wide range of apps may be available and they may depend on the vehicle and country. The content, scope and providers of apps can vary. Some apps also depend on availability of services offered by third parties.

For more information please visit the Volkswagen website.

Apps, their use, and the necessary mobile network connection may be subject to charges.

WARNING

Using apps can distract you from the road. Accidents and serious or fatal injuries can be caused if the driver is distracted while the vehicle is in motion.

- Drive with your full attention and with responsibility.
- Only operate the Infotainment system when the vehicle is stationary or when the traffic situation permits.

WARNING

Use of unsuitable apps or incorrect use of apps can cause damage to the vehicle and accidents with serious injuries, or even death.

- Protect the mobile telephone with its apps against misuse.

Volkswagen is not responsible for damage to the vehicle caused by poor-quality or faulty third-party apps, inadequate programming of third-party apps, insufficient network strength, data loss, misuse of mobile devices, or malware on data media, computers, tablets and mobile telephones.

Symbols

The symbols are equipment-dependent and are only available in some countries.

or Show more information.

Select Apple CarPlay technology.

Select Android Auto technology.

Connecting a mobile telephone with App-Connect

In order to use App-Connect or App-Connect Wireless, you must connect the mobile telephone to the Infotainment system via the **App-Connect** main menu *(→ Mobile phone interface)*. With App-Connect Wireless, the connection is initiated via Bluetooth® and then established via the Wi-Fi® hotspot of the Infotainment system.

As long as a mobile telephone is connected via App-Connect, no other mobile telephones can be used via the Infotainment system, e.g. to make phone calls via the Bluetooth mobile phone interface.

If Apple CarPlay is used, the Bluetooth connection is terminated again as soon as the connection via the Wi-Fi hotspot of the Infotainment system has been established.

If Android Auto is used, the Bluetooth connection is maintained.

Connecting a mobile telephone via USB cable

1. Connect the mobile telephone to the Infotainment system using a USB cable.
2. To grant the necessary permissions to the Infotainment system, confirm the permission requests on the mobile telephone.

   App-Connect is now set up.

Connecting a mobile telephone for App-Connect Wireless

1. In the app overview, tap **App-Connect** ▶ ⓘ/.
2. Select the desired technology Apple CarPlay or Android Auto in the pop-up menu.
3. In the Bluetooth menu of the mobile telephone, search for the displayed device name and pair the mobile telephone with the Infotainment system.

   In the factory settings, the device name of the Infotainment system is “my VW” and the last four digits of the VIN.
4. To grant the necessary permissions to the Infotainment system, confirm the permission requests on the mobile telephone.

   App-Connect Wireless is now set up.

App-Connect and App-Connect Wireless will not be available if you do not confirm the pop-up menus during the connection process. In this case, Volkswagen recommends deleting the mobile telephones in both the device settings and on the Infotainment system and restarting the connection process.

Apple CarPlay®

Prerequisites

The following conditions must be fulfilled in order to use Apple CarPlay:

✓ The iPhone must support Apple CarPlay.

✓ The Siri voice assistant must be activated on the iPhone.

✓ Apple CarPlay must be activated in the iPhone settings without any restrictions.

✓ For Apple CarPlay Wireless, Bluetooth and the Infotainment system as a Wi-Fi hotspot must be activated on the iPhone.

✓ If Apple CarPlay Wireless is not possible, the iPhone must be connected to the Infotainment system via a USB connection with data transfer capability. Only USB ports with data transfer capability are suitable for using Apple CarPlay.

✓ The USB cable used should be an approved USB cable certified by Apple, e.g. the original USB cable from Apple or a USB cable from Volkswagen Genuine Accessories.

The availability of the technologies depends on the country and may vary.

Information on technical requirements, compatible iPhones, certified apps and availability is available on the Volkswagen and Apple CarPlay websites or from your authorised Volkswagen repairer.

Opening Apple CarPlay

---

1. Open the app overview and tap ▶ **Apple CarPlay**.

Disconnecting the connection

---

1. To open the **App-Connect** main menu when in Apple CarPlay mode, tap Ⓥ.
2. Tap ⊗ or ⊗ to disconnect the active connection.

Points to note

Please note the following points during an active Apple CarPlay connection:

— The phone book can be accessed only via Apple CarPlay for the iPhone that is connected to the Infotainment system via Apple CarPlay. Other telephone functions can also be performed via the mobile phone interface of the Infotainment system.

— It is not possible to use the Apple CarPlay navigation at the same time as the internal navigation. The last route guidance to be started terminates the previous active route guidance.

— Depending on the Infotainment system, the instrument cluster display may show information about telephone mode.

— The iPhone sends navigation information to the Infotainment system only if the navigation app used is Apple Maps. The iPhone does not send navigation information to the instrument cluster if other navigation apps are used.

— You can accept or reject incoming calls or end a telephone call via the multifunction steering wheel.

Voice assistant

The “voice assistant” function is equipment-dependent and is only available in some countries.

Starting the voice assistant

---

1. Briefly tap on the multifunction steering wheel to start the IDA voice assistant of the Infotainment system.

   Or: long-tap on the multifunction steering wheel to start the Siri voice assistant of the connected iPhone.

Android Auto®

Prerequisites

The following conditions must be fulfilled in order to use Android Auto:

✓ The smartphone must support Android Auto.

✓ An Android Auto app must be installed on the smartphone.

✓ For Android Auto Wireless, Bluetooth must be activated on the smartphone and in the Infotainment system. In addition, the Infotainment system must also be activated as a Wi-Fi hotspot.

✓ If Android Auto Wireless is not possible, the smartphone must be connected to the Infotainment system using a USB port with data transfer capability. Only USB connections with data transfer capability are suitable for using Android Auto.

✓ The USB cable used should be an approved USB-cable certified by the smartphone manufacturer, e.g. the original USB cable from the smartphone manufacturer or a USB cable from Volkswagen Genuine Accessories.

The availability of the technologies depends on the country and may vary.

Information on technical requirements, compatible smartphones, certified apps and availability is available on the Volkswagen and Android Auto websites or from your authorised Volkswagen repairer.

Opening Android Auto

1. Open the app overview and tap **Android Auto**.

Disconnecting the connection

1. To open the **App-Connect** main menu when in Android Auto mode, tap .
2. Tap or to disconnect the active connection.

Points to note

The following points apply when an Android Auto connection is active:

— An active Android Auto device can be simultaneously connected to the Infotainment system via Bluetooth (Hands-free Profile, HFP).

— Telephone functions are possible via Android Auto. If the Android Auto device is connected to the Infotainment system via Bluetooth at the same time, the telephone function on the Infotainment system can also be used.

— It is not possible to use the Android Auto navigation at the same time as the internal navigation. The last route guidance to be started terminates the previous active route guidance.

— The instrument cluster display shows information about the telephone mode.

— Depending on the Infotainment system and navigation app you are using, turning instructions may be shown on the instrument cluster display.

— You can accept or reject incoming calls or end a telephone call via the multifunction steering wheel.

Voice assistant

The “voice assistant” function is available depending on the vehicle equipment.

Starting the voice assistant

---

1. Briefly tap on the multifunction steering wheel to start the IDA voice assistant of the Infotainment system.

   Or: long-tap on the multifunction steering wheel to start the voice assistant of the connected smartphone.

Stowing luggage and loads

Stowing luggage safely in the vehicle

— Always distribute any loads in the vehicle as evenly as possible. Do not cover any ventilation openings.

— Always stow luggage and heavy objects in the luggage compartment and place them as far forwards as possible →⚠.

— Observe gross axle weight ratings and the gross vehicle weight rating .

— Secure luggage in the luggage compartment to the fastening rings using suitable fixing and securing straps.

— Also stow small objects safely.

— If necessary, fold back the rear seat backrest and engage it securely.

— If necessary, adjust the headlight range. Vehicles with dynamic headlight range control adapt automatically to the load.

— Adjust the tyre pressure according to the vehicle load. Observe the tyre pressure sticker *(→ Tyre pressure)*.

⚠ WARNING

Objects or animals that are not secured or are secured incorrectly can cause serious or fatal injuries in the event of a sudden driving or braking manoeuvre or accident. This applies particularly if objects are struck when the airbag is triggered and then flung through the vehicle interior.

- Always stow all objects in the vehicle securely. Observe legal requirements when doing this.
- Stow items in the vehicle interior in such a way that they can never enter the airbag deployment zones while the vehicle is in motion.
- Secure animals in the vehicle using a system that is suitable for their weight and size.
- Always keep stowage compartments closed while the vehicle is in motion.
- Do not stow any hard, heavy or sharp objects loose in any of the vehicle's open stowage areas, on the surface behind the rear seat backrest or on the dash panel.
- Remove any hard, heavy or sharp objects from items of clothing and bags inside the vehicle and stow them securely in the luggage compartment.

⚠ WARNING

If an incorrect sitting position is assumed due to stowed objects, serious or fatal injuries can occur in the event of sudden driving and braking manoeuvres and in accidents.

- Never stow objects on a seat if this is to be occupied and used by a person.

⚠ WARNING

Transporting heavy objects changes the vehicle's handling due to the change in the centre of gravity and increases the braking distance. Heavy loads that are not properly stowed or secured can change the vehicle handling, e.g. as a result of the load slipping. This can lead to loss of control over the vehicle and cause serious or fatal injuries.

- Never overload the vehicle. Both the load and the distribution of the load in the vehicle will have an effect on the driving response and braking distance of the vehicle.
- Always distribute the load evenly and as low down as possible in the vehicle.
- Always stow heavy items in the luggage compartment as far as possible in front of the rear axle.
- Secure loose objects to prevent them from slipping.
- Always adapt your speed and driving style to the current visibility, weather and road or traffic conditions.
- Accelerate particularly carefully and gently.
- Avoid sudden braking and driving manoeuvres.
- Brake earlier than usual if the vehicle is heavily loaded.

NOTICE

Rubbing objects on the rear windows can cause damage, e.g. to the heating conductors of the rear window heating.

- Load the luggage compartment only up to a height where no objects are in contact with the rear windows.

NOTICE

Carrier systems that are fixed on the rear spoiler can damage the vehicle.

- Do not secure any luggage carriers or other carrier systems such as bicycle carriers on the vehicle's rear spoiler.

Luggage compartment cover

When the boot lid is opened and closed, the luggage compartment cover is also raised and lowered if the retaining straps are attached.

The luggage compartment cover is not suitable as a shelf for objects, not even for light pieces of clothing →⚠.

⚠ WARNING

Objects or animals on the luggage compartment cover can damage the luggage compartment cover and cause serious or fatal injuries in the event of sudden driving and braking manoeuvres or accidents.

- Never transport any objects on the luggage compartment cover.
- Never transport any animals on the luggage compartment cover.

NOTICE

Incorrect handling of the luggage compartment cover may result in damage.

- Do not load the luggage compartment to such a height that the luggage compartment cover can press on the load when the boot lid is closed.
- Never close the boot lid when the luggage compartment floor is open or locked in position.

Installing and removing the luggage compartment cover

Fig. 1 In the luggage compartment: removing and installing the luggage compartment cover.

Removing the luggage compartment cover

1. Unhook the retaining straps at the top on the boot lid → *Fig. 1* (upper arrows).
2. Push the luggage compartment cover out of the side holders from below → *Fig. 1* (lower arrows).

Fitting the luggage compartment cover

1. Push the luggage compartment cover into the side holders in the luggage compartment → *Fig. 1* (lower arrows).
2. Hook the retaining straps onto the boot lid → *Fig. 1* (upper arrows).

Opening and closing the luggage compartment floor

Fig. 1 In the luggage compartment: luggage compartment floor (illustration).

The rear part of the luggage compartment floor can be folded forward. A stowage compartment, e.g. for the vehicle toolkit, can be found under the luggage compartment floor.

Opening the luggage compartment floor

1. Grasp the loop or opening in the luggage compartment floor and lift the rear part of the luggage compartment floor in the direction of the arrow → *Fig. 1*.

Closing the luggage compartment floor

1. Fold the luggage compartment floor down in the opposite direction to the arrow.

NOTICE

Incorrect use can damage the luggage compartment floor or the trim of the luggage compartment.

- Do not allow the luggage compartment floor to fall when closing it, but always guide it downwards carefully.
- Always distribute loads over as wide an area as possible on the luggage compartment floor in order to avoid point loads.

Second luggage compartment floor – Functions

Depending on the vehicle equipment, the vehicle may have a second luggage compartment floor.

Opening the second luggage compartment floor

Fig. 1 In the luggage compartment: opening the second luggage compartment floor.

(1) Handle recess in the luggage compartment floor.

1. Grasp the handle and fold the rear part of the luggage compartment floor forward in the direction of the arrow → *Fig. 1* (1).

Closing the second luggage compartment floor

1. Fold back the luggage compartment floor and carefully lower it into position.

Securing the second luggage compartment floor parallel to the backrest

Fig. 2 In the luggage compartment: locking the second luggage compartment floor in position.

1. Fold the rear part of the luggage compartment floor forward.
2. Lift the folded luggage compartment floor and insert into the side retainers with the open side facing down → *Fig. 2* (close-up).

Lowering the second luggage compartment floor

1. Fold the rear part of the luggage compartment floor forward.
2. Pull the folded luggage compartment floor to the rear over the side guides and lower into position at the bottom.

NOTICE

Incorrect use can damage the second luggage compartment floor or the trim of the luggage compartment.

- Do not allow the second luggage compartment floor to fall when closing it, but always guide it downwards carefully.
- Always distribute loads (maximum 50 kg (110 lbs)) over as wide an area as possible on the luggage compartment floor in order to avoid point loads.

Fastening rings

Fig. 1 In the luggage compartment: fastening ring (illustration).

(1) Fastening ring.

There are fastening rings in the luggage compartment which can be used to secure loose items and luggage with the help of lashing, retaining or securing straps → *Fig. 1* , .

WARNING

Unsuitable or damaged lashing, retaining or securing straps could tear in the event of a braking manoeuvre or accident. This could cause objects to be flung through the vehicle interior and lead to severe or fatal injuries.

- Always use suitable and undamaged lashing, retaining or securing straps.
- Pull lashing, retaining and securing straps taut crosswise over the load on the luggage compartment floor and attach the lashing, retaining and securing straps securely to the fastening rings.
- Make sure that the upper edge of the load is higher than the fastening rings, particularly when stowing flat objects.
- Observe the signs on stowing loads that may be affixed in the luggage compartment depending on the vehicle equipment.
- Never secure a child seat using the fastening rings.

WARNING

Elastic tensioning straps must be stretched in order to secure them at the fastening rings and are therefore under tension. If elastic tensioning straps slip off and snap towards the body, the hooks attached to them can cause serious injuries.

- Protect your eyes and face when installing and removing the luggage net.
- Always first secure the elastic tensioning straps to the fastening rings in the front area of the luggage compartment. Then pull the elastic tensioning straps towards the load sill. Secure the elastic tensioning straps to the fastening rings so that they snap away from the body if they slip.

Suitable lashing, retaining or securing straps and load securing systems are available from a suitably qualified workshop. Volkswagen recommends using an authorised Volkswagen repairer.

Bag hook

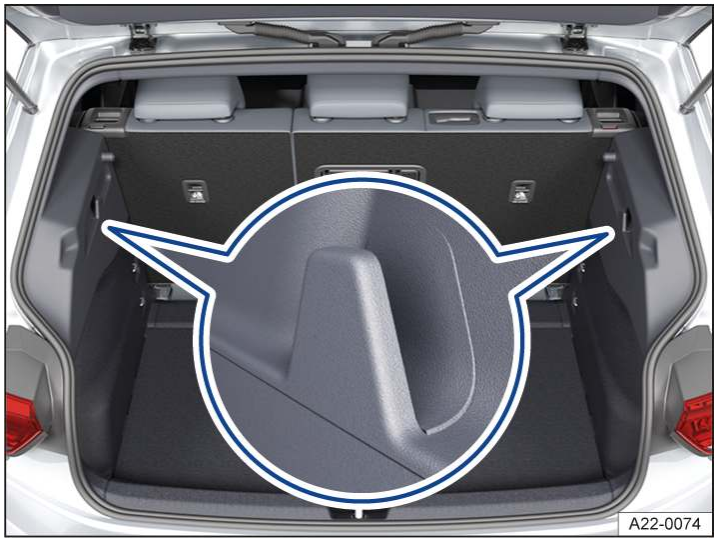

Fig. 1 On the left and right in the luggage compartment: bag hooks.

In the luggage compartment, there may be bag hooks for hanging light shopping bags.

WARNING

Items of luggage and other objects that are secured at bag hooks can tear off and be flung through the vehicle interior in the event of a braking manoeuvre or accident. This can lead to a loss of control over the vehicle and cause serious or fatal injuries.

- Never use the bag hooks to lash down items of luggage or other objects.
- The bag hooks in the vehicle should only be used for lightweight object weighing max. 2.5 kg (approx. 5.5 lbs).

Load-through hatch

Fig. 1 In the rear seat backrest: load-through hatch (illustration)

Fig. 2 In the luggage compartment: rear side of the load-through hatch (illustration).

Depending on the vehicle equipment, a load-through hatch may be located behind the centre armrest on the rear seat backrest. This can be used to transport long objects in the vehicle interior, such as skis.

Opening the load-through hatch from the vehicle interior

1. Fold the centre armrest forwards *(→ Centre armrest)*.
2. Pull the release lever in the direction of the arrow → *Fig. 1* and fold the flap for the load-through hatch all the way towards the front → ⚠.
3. Open the boot lid.

Opening the load-through hatch from the luggage compartment

1. Push down the release lever in the direction of the arrow → *Fig. 2* and fold the flap forwards.
2. Push long objects through the load-through hatch from the luggage compartment.
3. Secure the objects with the seat belt as required.
4. Close the boot lid.

Closing the load-through hatch

1. Fold back the flap of the load-through hatch until it engages in position.

   There may be a red marking on the luggage compartment side. This must not be visible → ⚠.

2. Close the boot lid.
3. If necessary, fold back the centre armrest.

⚠ WARNING

Objects in the deployment zone of the centre airbag can prevent it from functioning properly and cause serious or fatal injuries.

- Never push objects forward into the deployment zones of the centre airbag *(→ Airbag system)*.

⚠ WARNING

Serious or fatal injuries could be caused if the load-through hatch is folded forwards or backwards carelessly or in an uncontrolled way.

- Never fold the load-through hatch forwards or backwards while the vehicle is in motion.
- Ensure that the seat belt is not trapped or damaged when folding back the load-through hatch.
- Always keep hands, fingers, feet or other body parts away from the swivel area when folding the load-through hatch forwards and backwards.
- Always make sure that the red mark on the locking indicator is never visible when the load-through hatch is in the upright position. The load-through hatch is not engaged properly if you can see a red marking.
- Never transport a person, particularly a child, on this seat if the load-through hatch is folded forward or not securely engaged.

Introduction to the topic

The preparation for a bicycle carrier consists of a removable bicycle carrier preparation and a mounting for the bicycle carrier preparation behind the number plate holder. The system was developed especially for carrying a bicycle carrier with up to three bicycles .

The bicycle carrier preparation is not designed for towed loads and must therefore never be used for pulling a trailer or for towing a vehicle →⚠.

Folding number plate holder

When the bicycle carrier preparation is fitted, it must still be possible to easily see and read the vehicle's number plate. Observe any country-specific regulations and use an additional number plate on the bicycle carrier if necessary.

If there is no bicycle carrier or rear carrier system on the bicycle carrier preparation, remove the bicycle carrier preparation and fold up the number plate holder so that the number plate is visible again.

⚠ WARNING

Incorrect use of the bicycle carrier preparation can lead to accidents, serious or fatal injuries and damage to the vehicle.

- Use the supplied bicycle carrier preparation only for mounting a rear carrier system or bicycle carrier.
- Use the bicycle carrier preparation only if it is undamaged and fitted correctly.
- Do not carry out any alterations or repairs to the bicycle carrier preparation.
- Do not use the bicycle carrier preparation for towing.

⚠ WARNING

When the bicycle carrier preparation is fitted, there is an increased risk of accidents and serious injuries for other road users in the event of a rear-end collision.

- Remove the bicycle carrier preparation after use.

Fitting the bicycle carrier preparation

Fig. 1 At the rear of the vehicle: number plate holder.

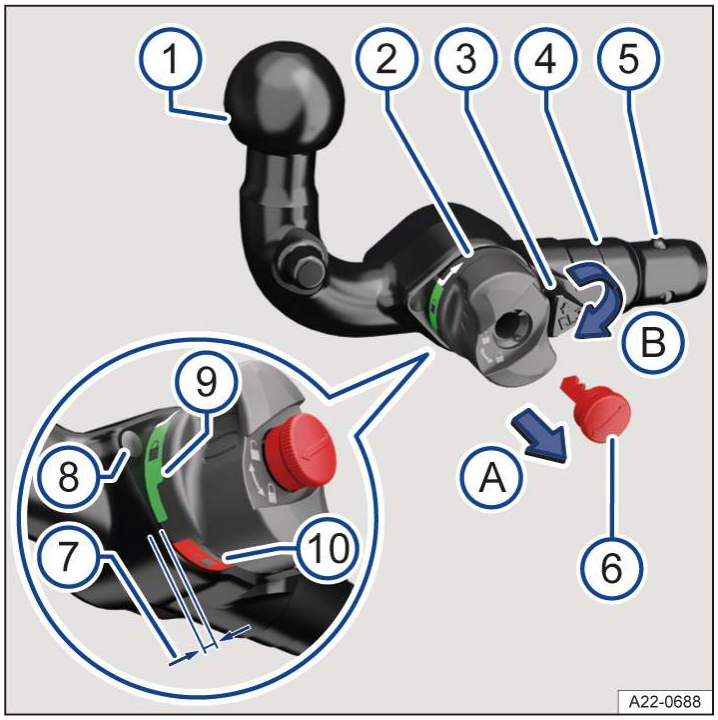

Fig. 2 Overview: removable bicycle carrier preparation.

1. Ball head.
2. Handwheel.
3. Centring device.
4. Shank.
5. Retaining balls.
6. Key.
7. Gap (pre-tensioned bicycle carrier preparation).
8. White marking on the bicycle carrier preparation.
9. Green marking on handwheel.
10. Red marking on handwheel.

The removable bicycle carrier preparation is located in the transport bag in the luggage compartment.

Step 1: preparations

1. Before using the removable bicycle carrier preparation for the first time, make a note of the number stamped on the key. This can be used to obtain a replacement key if you lose the key.
2. Fold the number plate holder down in the direction of the arrow → *Fig. 1*.
3. Remove the sealing plug from the bicycle carrier preparation and stow it in the vehicle.
4. Check to ensure that the mounting, handwheel → *Fig. 2* (2), shank → *Fig. 2* (4) and the retaining balls → *Fig. 2* (5) of the bicycle carrier preparation are all clean and not damaged → ⚠. Clean if necessary.

Step 2: pre-tensioning the bicycle carrier preparation

The bicycle carrier preparation cannot be fitted properly unless it is pre-tensioned.

1. Grip the bicycle carrier preparation underneath the ball head → *Fig. 2* (1) with one hand.
2. Fold open the lock cover and insert the key into the lock → *Fig. 2* (6).
3. Turn the key clockwise → *Fig. 2* (6).
4. Use your other hand to pull out the handwheel → *Fig. 2* (2) in the direction of arrow → *Fig. 2* (A) and hold it in this position → ⚠.
5. Turn the handwheel → *Fig. 2* (2) in the direction of arrow → *Fig. 2* (B) until it engages.

   The bicycle carrier preparation is now pre-tensioned. The red marking → *Fig. 2* (10) on the handwheel must point towards the white marking → *Fig. 2* (8) on the bicycle carrier preparation. The handwheel is clearly visible in front of the bicycle carrier preparation. The gap between them is approximately 4 mm → *Fig. 2* (7).
6. Check to ensure that all retaining balls → *Fig. 2* (5) can be pressed fully into the bicycle carrier preparation shank → *Fig. 2* (4).

Step 3: attaching the pre-tensioned bicycle carrier preparation to the vehicle

Do not touch the handwheel once the bicycle carrier preparation has been pre-tensioned. When engaged, the handwheel will spring back to its original position and could cause injury → ⚠.

1. Guide the pre-tensioned removable bicycle carrier preparation into the mounting tube.
2. Push the bicycle carrier preparation firmly into the tube until it engages. Both centring devices must engage in the mounting points on the vehicle → *Fig. 2* (3).
3. The handwheel has now returned to its original position. There is no longer a gap between the handwheel and the bicycle carrier preparation → *Fig. 2* (2).
4. Turn the key → *Fig. 2* (6) anticlockwise in the handwheel and remove it.
5. If the setting is correct, you will not be able to turn the handwheel → *Fig. 2* (2) or pull it out.
6. Close the lock cover and stow the key in the transport bag.

Step 4: safety check

Before fitting a bicycle carrier, check that the bicycle carrier preparation is secured correctly.

— The green marking → *Fig. 2* (9) on the handwheel must point towards the white marking → *Fig. 2* (8) on the bicycle carrier preparation.

— The handwheel must rest on the bicycle carrier preparation and there must be no gap between them → *Fig. 2* (2).

— Shake or pull the bicycle carrier preparation → *Fig. 2* (1) out with some force. It must sit firmly in the mounting → ⚠.

— The lock must be locked and the key → *Fig. 2* (6) removed.

— The lock cover must cover the lock in the locking lever.

WARNING

Incorrect mounting and use of the bicycle carrier preparation can lead to accidents and serious injuries.

- Use the bicycle carrier preparation only when it is secured correctly.
- Never use a bicycle carrier if the bicycle carrier preparation does not engage into position correctly or cannot be pre-tensioned.
- Have the bicycle carrier preparation checked by a suitably qualified workshop if it cannot be fitted. Volkswagen recommends using an authorised Volkswagen repairer.
- Never use a bicycle carrier if the key cannot be removed from the handwheel when the bicycle carrier preparation has been fitted. This means that the bicycle carrier preparation is not locked properly.
- Always secure the removed bicycle carrier preparation safely in the luggage compartment.

WARNING

The removable bicycle carrier preparation is heavy. When performing the safety check, the bicycle carrier preparation could fall off and cause crush injuries.

- Always take care when checking the bicycle carrier preparation.

NOTICE

The mounting on the vehicle, handwheel, shank and bicycle carrier preparation retaining balls must all be clean and undamaged. Otherwise it may not be possible to lock the bicycle carrier preparation securely.

- Regularly check the mounting, handwheel, shank and retaining balls of the bicycle carrier preparation for damage.
- Do not aim the jet of a high-pressure cleaner or steam cleaner directly at the bicycle carrier preparation mounting. This could wash the grease required for lubrication out of the mounting.

Removing the bicycle carrier preparation

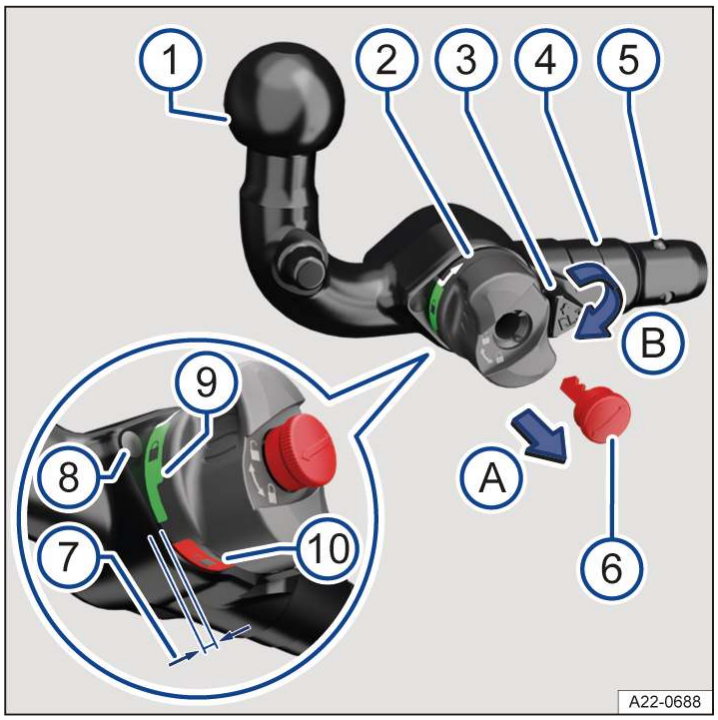

Fig. 1 Overview: removable bicycle carrier preparation.

(1) Ball head.
(2) Handwheel.
(3) Centring device.
(4) Shank.
(5) Retaining balls.
(6) Key.
(7) Gap (pre-tensioned bicycle carrier preparation).
(8) White marking on the bicycle carrier preparation.
(9) Green marking on handwheel.
(10) Red marking on handwheel.

1. Fold open the lock cover and insert the key → *Fig. 1* (6) in the lock.
2. Turn the key clockwise → *Fig. 1* (6).
3. Hold the bicycle carrier preparation → *Fig. 1* (1) with one hand → ⚠.
4. Use your other hand to pull out the handwheel → *Fig. 1* (2) in the direction of arrow → *Fig. 1* (A) and hold it in this position.
5. Turn the handwheel → *Fig. 1* (2) in the direction of arrow until it engages → *Fig. 1* (B).
6. Hold the handwheel → *Fig. 1* (2) in this position and pull the bicycle carrier preparation out of the mounting. The bicycle carrier preparation is now pre-tensioned.
7. Release the handwheel → *Fig. 1* (2) and stow the pre-tensioned bicycle carrier preparation safely in the transport bag. Secure the bag at one of the fastening rings in the luggage compartment.
8. Insert the sealing plug into the bicycle carrier preparation mounting.
9. Fold up the number plate holder.

⚠ WARNING

The removable bicycle carrier preparation is heavy. The bicycle carrier preparation can fall down when it is being removed and cause crush injuries.

- Always take care when removing the bicycle carrier preparation.

Fitting a rear carrier system or bicycle carrier on the bicycle carrier preparation

Rear carrier systems include equipment such as bicycle carriers or hunters' boxes, for example, which are installed on the bicycle carrier preparation.

Use only rear carrier systems that are intended by the manufacturer for the corresponding vehicle model, model year and vehicle version →⚠.

Volkswagen recommends using Volkswagen Genuine Parts or Volkswagen Genuine Accessories, which you can purchase from an authorised Volkswagen repairer.

Mount the rear carrier system in accordance with the manufacturer's assembly instructions.

Maximum load of the rear carrier system

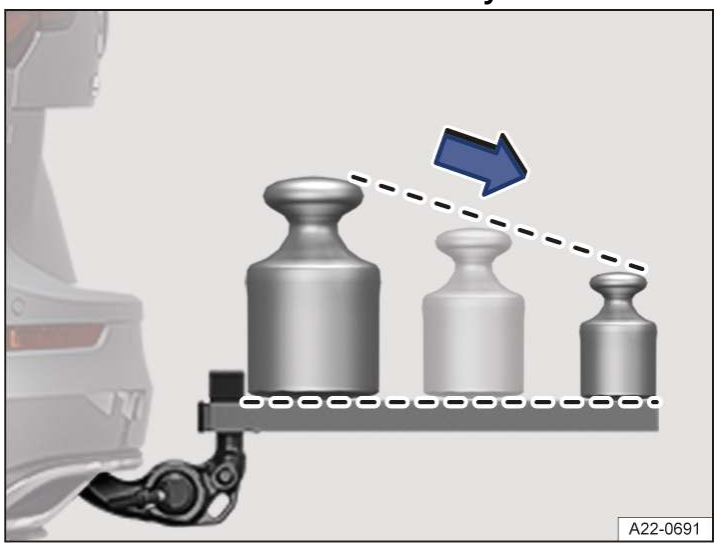

Fig. 1 Recommended weight distribution on the rear carrier system.

The load is made up of the rear carrier system and the items transported on it.

The maximum recommended load of the rear carrier system installed on the bicycle carrier preparation can deviate from the vehicle-specific drawbar load of the vehicle.

However, the model-specific maximum drawbar load of the bicycle carrier preparation must not be exceeded.

Due to the lever effect, the load capacity decreases the further the centre of gravity of the rear carrier system is away from the ball head.

Position heavy items as close as possible to the bicycle carrier preparation → *Fig. 1*.

Vehicle-specific maximum load

In order to find out the recommended maximum load for your vehicle, check the drawbar load of your vehicle . The corresponding maximum load can then be read from the following table. Volkswagen recommends observing the specified number of bicycles on the rear carrier system in accordance with Regulation UN-R 55.

Vehicle-specific drawbar load	Maximum load	Number of bicycles
50 kg (110 lbs)	50 kg (110 lbs)	2
55 kg (121 lbs)	55 kg (121 lbs)	2
from 75 kg (165 lbs)	75 kg (165 lbs)	3

Maximum overhang of the rear carrier system

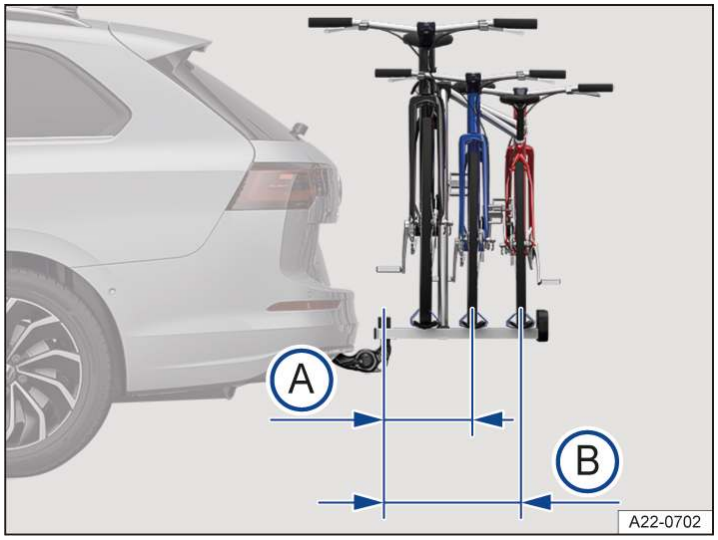

Fig. 2 Illustration of the maximum overhang on a bicycle carrier for two or three bicycles.

(A) With a load of up to 55 kg (121 lbs): 500 mm (approx. 19.7 in).

(B) With a load of 75 kg (165 lbs): 700 mm (approx. 27.6 in).

For bicycle carrier systems with two bicycles, the maximum overhang must not exceed 500 mm (approx. 19.7 in) → *Fig. 2* (*A*) from the middle of the ball head to the middle of the rail of the last bicycle carrier. The overhang must not exceed 700 mm (approx. 27.6 in) → *Fig. 2* (*B*) for bicycle carrier systems with three bicycles.

WARNING

Incorrect use of a rear carrier system mounted on the bicycle carrier preparation can lead to accidents and serious or fatal injuries.

- Make sure that the rear carrier system is suitable for use on your vehicle.
- Always read and observe the fitting instructions of the rear carrier system's manufacturer.
- Never secure a rear carrier system on the ball neck below the ball head. The rear carrier system could slip due to the shape of the ball neck.

Volkswagen recommends that you remove all add-on parts of the load on the rear carrier system before setting off. This includes bicycle bags and baskets, child seats or batteries. This helps improve the rear carrier system's wind load and centre of gravity.

Information on towing a trailer

The vehicle is not approved for towing a trailer. It is not permitted to retrofit a towing bracket.

WARNING

When the vehicle is driven, a fitted towing bracket on the vehicle can cause vehicle damage and accidents and lead to serious or fatal injuries.

- Never fit a towing bracket on the vehicle.

Information on the roof carrier

For technical reasons, the body of the vehicle is not designed for fixing a roof carrier.

The vehicle is not approved for use with a roof carrier. No roof carrier may be used or retrofitted.

WARNING

If a roof carrier is mounted on the vehicle, this can become detached while driving and fall off the vehicle roof. This can cause accidents and serious or fatal injuries.

- Never fit a roof carrier on the vehicle.

NOTICE

Mounting any kind of roof carrier on the vehicle can cause considerable damage.

- Never fit a roof carrier on the vehicle.

Introduction to the topic

DANGER

The components of the high-voltage system are under high electrical voltage. Contact with live components of the high-voltage system will result in burns, serious injuries or fatal electric shock.

- You should always assume that the high-voltage battery is fully charged and that all high-voltage components are live. This can also be the case when the ignition is switched off.
- Never touch high-voltage components or orange-coloured high-voltage cables. Damage to high-voltage components is not visible in all cases.
- Never remove the orange-coloured high-voltage cables and never damage or modify these cables.
- Never disconnect the high-voltage cables from the high-voltage network.
- Never open or modify the cover of the high-voltage battery and never remove this cover.
- Never carry out repair and maintenance work on orange-coloured high-voltage cables or high-voltage components. Any work on the high-voltage system must be carried out only by a suitably qualified workshop with corresponding approval for this work. Volkswagen recommends using an authorised Volkswagen repairer.
- Never carry out work with cutting, forming and sharp-edged tools or heat sources in the vicinity of high-voltage components and high-voltage cables.

NOTICE

The underbody or the high-voltage battery may be damaged after an accident or if the vehicle bottoms out.

- Have the vehicle checked by qualified and trained personnel. Volkswagen recommends using an authorised Volkswagen repairer.

The vehicle is no longer ready to drive if the high-voltage system has been switched off for safety reasons.

— Secure the vehicle and seek expert assistance if the system has been deactivated.

DANGER

Damage to the vehicle or to the high-voltage battery or a fire in the battery cells can cause toxic gases or fluids to leak out. High-voltage components may be live in this case. There is a risk of serious injury, burns, or lethal electrical shock.

- Do not breathe in any gases that are emitted.
- Never touch any fluids that escape.
- Leave the vehicle quickly and with all vehicle occupants.
- Move away from the immediate vicinity of the vehicle.
- Observe the warning information on the fire hazard in the instrument cluster.

⚠ and ⚠ Danger of high-voltage battery fire

The ⚠ central warning lamp in the instrument cluster display lights up red. The text message **High-voltage battery: risk of fire! Pull over safely ASAP and leave the vehicle. Call emergency services!** is displayed. A continuous acoustic warning sounds. The horn may also sound if the vehicle is parked or charging.

The ⚠ warning lamp appears on the digital instrument cluster.

The temperature of the high-voltage battery is too high.

1. **Do not drive on!** Stop the vehicle as soon as possible taking into account the traffic situation.
2. Park the vehicle in a safe place in the open air and away from buildings and other vehicles.
3. Switch on the hazard warning lights if possible.
4. Switch on the electronic parking brake.
5. Switch off the ignition.
6. Leave the vehicle key in a visible place in the vehicle (e.g. in the centre console).
7. Get out of the vehicle with all vehicle occupants and move to a location at a greater distance from the vehicle, if possible behind a crash barrier.
8. Inform the emergency services.
9. Do not attempt to extinguish the fire yourself.

The constant acoustic warning can only be turned off by a suitably qualified workshop. Volkswagen recommends using an authorised Volkswagen repairer.

Other functions on the vehicle may also be triggered with the warning message, e.g. charging is ended.

Warning signs for the high-voltage system

Some warning signs indicate a danger due to a hazardous contact voltage on high-voltage components and orange-coloured high-voltage cables → *Fig. 1*, → *Fig. 2*, → *Fig. 3*.

Where are warning signs on the vehicle?

— On covers and caps behind which high-voltage components are located.

— On high-voltage components, including the high-voltage battery.

— Under the bonnet.

Fig. 1 Warning sign on high-voltage components.

Fig. 2 Warning sign on high-voltage components.

Fig. 3 Warning sign in the bonnet space.

The surfaces of high-voltage components can become very hot and should not be touched → *Fig. 4*.

Fig. 4 Warning sign on the battery charger.

The illustrations may differ slightly from the warning signs in the vehicle.

Troubleshooting

Fault in high-voltage system

The warning lamp lights up red. A message is shown on the digital instrument cluster display.

There is a fault in the high-voltage system. High-voltage components may be damaged →.

It is not possible to charge the high-voltage battery.

DANGER

In the event of a fault in the high-voltage system, high-voltage components including the high-voltage battery and high-voltage cables may be damaged and live. There is a risk of serious injury, burns, or lethal electrical shock.

- Do not touch the high-voltage components and high-voltage cables.

1. **Do not drive on!** Stop the vehicle taking into account the traffic situation.
2. Park the vehicle safely.
3. Deactivate the vehicle's drive system.
4. Seek expert assistance immediately.

Fault in high-voltage system

The indicator lamp lights up yellow. A message is shown on the digital instrument cluster display.

There may be faults in high-voltage components.

You can continue to drive.

1. Have the high-voltage system checked by a suitably qualified workshop. Volkswagen recommends using an authorised Volkswagen repairer.

Introduction to the topic

Prerequisites

✓ The vehicle's drive system has been deactivated.

✓ The charging cable and charging infrastructure are in fault-free and tested condition → ⚠.

Among other things, the maximum possible charging capacity is influenced by the charging capacity of the local charging station, the charging cable, vehicle equipment and the ambient or battery temperature. Further information and technical specifications for your vehicle can be obtained from an authorised Volkswagen repairer.

Charging modes

— AC charging at a public charging station or wall box with alternating current *(→ Charging operations)*.

— DC charging with very high charging currents at a quick-charging station → ⓘ *(→ Charging operations)*.

— AC charging at a socket with alternating current and very low charging capacity. The availability of this charging method is country-dependent. The domestic electrical installation must be checked to ensure it is in perfect working order → ⚠ *(→ Charging operations)*.

Charge with the maximum available AC charging capacity at the charging station for better energy efficiency.

⚠ WARNING

Failure to observe the operating and safety instructions and incorrect handling of the high-voltage battery and charging cable can cause a short circuit, electric shock, explosions and fire. There is a risk of damage, as well as serious or fatal injuries.

- Do not charge with damaged charging accessories, e.g. if there is wear damage on charging connectors or charging cables.
- Never charge in marked explosion-hazard areas or where flammable gases may be present. Components of the charging cable can cause sparks and thus ignite flammable or explosive vapours.
- For safety reasons, do not carry out any work in or on the vehicle during charging.
- Observe the safety and operating instructions for the supplied charging cable.
- Always protect electrical connectors against direct ingress of water, moisture and other liquids.
- Always end charging before removing the charging connector so that you do not come into contact with residual energy in the charging storage device.
- Carry out home charging only at a connection that is suitable for electric vehicles and that has been installed and checked by qualified personnel.

⚠ WARNING

Driving when the charge level of the high-voltage battery is too low can lead to the vehicle breaking down in traffic. This can result in accidents and severe injuries.

- Always charge the high-voltage battery sufficiently before starting your journey.

NOTICE

Frequent DC charging can permanently reduce the battery capacity.

- In day-to-day life, you should primarily charge the high-voltage battery at a charging station or wall box using alternating current (AC).

Compatible charging connections

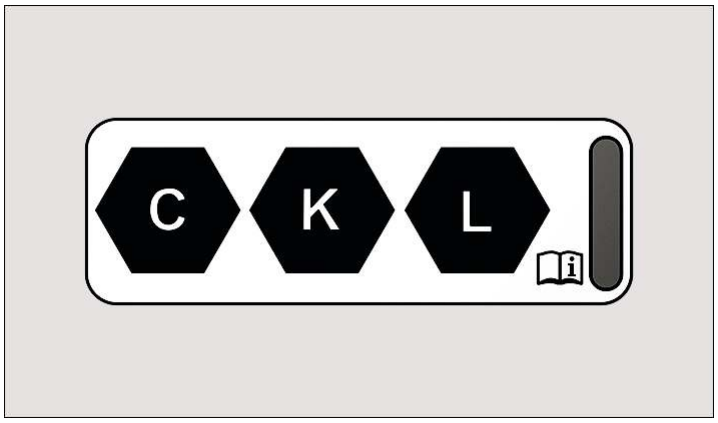

Fig. 1 On the charging socket: sticker for AC charging (C) and DC charging (K, L) with a voltage of up to 920 volts.

The symbols on the charging socket can also be found on suitable charging stations, charging cables or charging accessories → *Fig. 1*.

The requirements of the respective country and the following standards apply to the charging components:

— IEC 61851 and IEC 62196 (Europe, Taiwan).

— SAE J 1772 (Japan, South Korea, USA and Canada).

Handling the high-voltage battery

Reliability and capacity of the high-voltage battery

Lithium-ion batteries are subject to a physical and chemical ageing and wear process during their useful life. Careful handling of the high-voltage battery makes a significant contribution to maintaining a high usable capacity and range over the long term. Volkswagen therefore recommends observing the following care instructions.

Please also observe the valid Volkswagen warranty and guarantee terms for the high-voltage battery. Please contact your authorised Volkswagen repairer for further information.

Charging Guidance

— For everyday use, set the upper battery charge limit to 80% in the Infotainment system *(→ Battery charge limits)* or activate Battery Care Mode.

— Charge the high-voltage battery when the charge level is below 20%. Avoid complete discharge of the high-voltage battery →.

— Plan the charging process for a later departure time with the departure times in the Infotainment system *(→ Timer-controlled charging)*. This improves the performance of the high-voltage battery when driving off.

— If you fully charge the high-voltage battery, you should drive off shortly afterwards if possible – or plan charging with a departure time in the Infotainment system *(→ Timer-controlled charging)*.

— Avoid regular fast charging with direct current (DC).

Vehicle standing times

— Park the vehicle with a charge level of between 40% and 70% if the vehicle will be left standing for a long time →.

— In the case of long standing times, avoid high outside temperatures if possible, particularly with exposure to direct sunlight.

— Use the stationary air conditioning in good time before your journey to improve comfort and performance (depending on vehicle equipment), particularly at temperatures below around -15 °C (around +5 °F) *(→ Stationary air conditioning)*.

NOTICE

A fully discharged high-voltage battery can lead to total discharge if the vehicle is stationary for a long time. This can lead to irreversible damage to the high-voltage battery.

- Charge the high-voltage battery at the latest after four months if the vehicle is not used for an extended period.
- Pay attention to the yellow indicator lamp in the digital instrument cluster *(→ Charging operations)*.

NOTICE

Tampering with the high-voltage battery is not permitted and it must not be used as a stationary power source. This can cause irreversible damage to the high-voltage battery.

- Never perform technical modifications or interventions on the high-voltage battery and high-voltage components.

Battery Care Mode

To maintain battery capacity in the long term, Battery Care Mode limits the upper battery charge limit to 80% or 90%. This value depends on the ambient temperature.

1. Open the **Charging** main menu in the Infotainment system.
2. Tap Settings.
3. Activate function.

If you use a higher battery charge limit, this will be automatically reset for the next charging process.

Use Battery Care Mode for everyday trips that do not require maximum range.

You can set a higher upper battery charge limit for departure times in the Infotainment system that are used at a charging location. Battery Care Mode remains activated for other charging processes.

After the vehicle is parked, the radiator fan may run audibly for some time. The temperature of the high-voltage battery is optimised.

Charging

The high-voltage battery can be charged with alternating current at a charging station or mains socket (AC charging) or with direct current at a quick-charging station (DC charging).

Connecting the charging cable

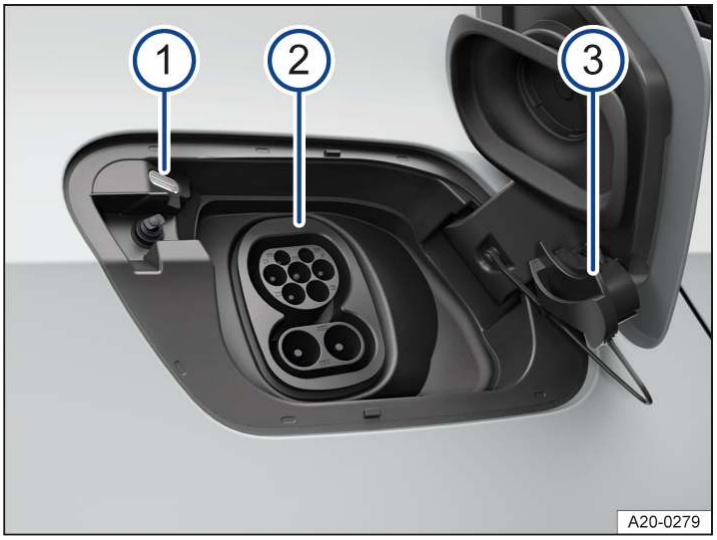

Fig. 1 Behind the charging socket flap at the rear right: charging socket.

(1) Charging process display.

(2) AC connection (top) and DC connection (bottom) of the charging socket.

(3) Protective cap in "parking position".

1. Unlock the vehicle.
2. Open the charging socket flap by lightly pressing on the flap.
3. Remove the charging cable from the charging station or connect the charging cable to the power supply and fully unwind.

   Charging cable for mains sockets: The protective device of the charging cable will carry out a self-test *(→ Charging cable for mains sockets)*.
4. DC charging: Remove the protective cap and secure it in the "parking" position → *Fig. 1* (3).
5. Insert the charging connector into the charging socket and check that it is straight and fully inserted → *Fig. 2*.

   The charging connector is locked automatically.

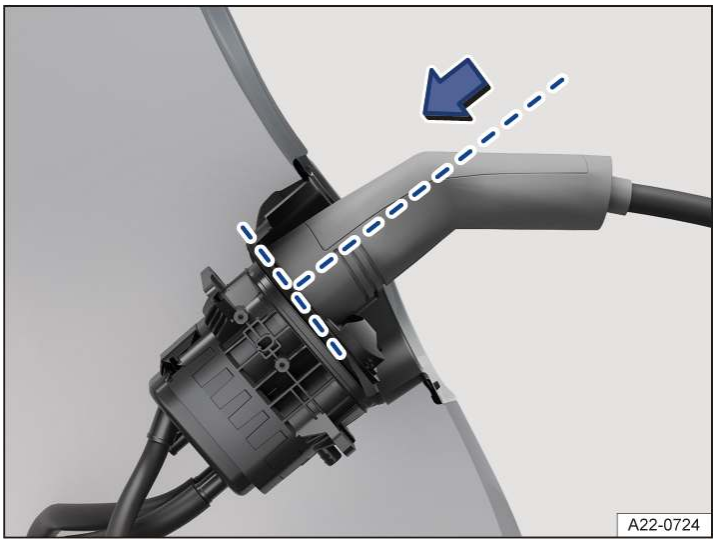

Fig. 2 Fully inserted charging connector (illustration).

The indicator lamp in the digital instrument cluster lights up when the charging connector is plugged in.

Starting the charging process

1. Adjust the upper battery charge limit on the screen with charging information on the Infotainment system to obtain the desired range with immediate charging *(→ Charging settings)*.

   Or: the settings for a stored charging location in the Infotainment system are used automatically.

2. If necessary, activate the charging station.

The indicator lamp in the digital instrument cluster flashes green while the high-voltage battery is charging. The LED on the charging socket pulses green.

Ending the charging process prematurely

1. Charging station or mains socket (AC charging):

   Tap Stop charging in the **Charging** menu of the Infotainment system.

   Or: press the release button on the vehicle key. Remove the charging connector within 30 seconds, as the charging process will continue after this time.

Quick-charging station (DC charging): The charging process can be ended at the DC charging station.

After charging

Once the desired charge level has been reached, the charging process display lights up green → *Fig. 1* (1).

Charging station or mains socket (AC charging):

1. Unlock the vehicle and remove the charging connector within 30 seconds.

   Or: if **Release AC charging cable automatically** is selected in the Infotainment system, the charging connector was released automatically and can be removed.

2. Disconnect the charging cable from the power supply and fit protective cap.
3. Close the charging socket flap so that it engages audibly.

Quick-charging station (DC charging): the charging connector is released automatically from the charging station when charging has ended and can be removed.

If the charging connector is not unlocked, it is possible to prevent the vehicle from becoming stranded by releasing the connector manually *(→ Charging connector)*.

Charging process display

Fig. 1 Behind the charging socket flap: charging process display.

An LED on the charging socket → *Fig. 1* shows the status of the charging process → *Fig. 2*.

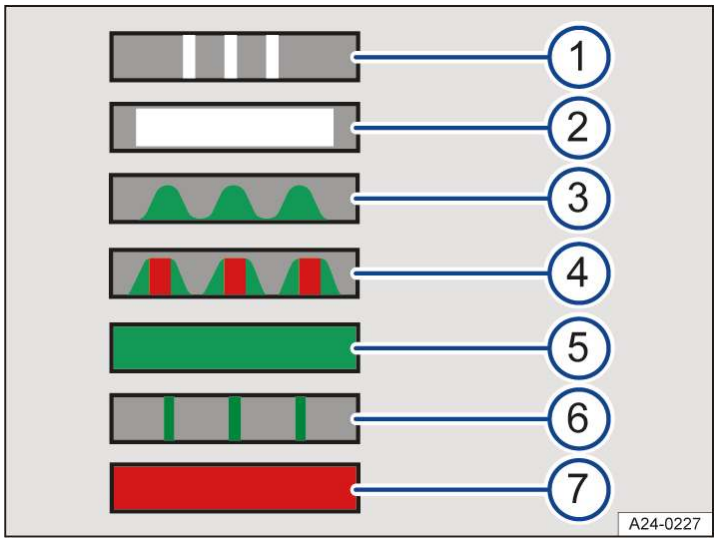

Fig. 2 Operating and fault indications of the LED light unit (illustration).

1. Blinking: charging connector has been detected.
2. Flashing white: vehicle is establishing the connection with the charging infrastructure. Charging process is being prepared.

   Lit up: no charging function is active.
3. Pulsating green: the high-voltage battery is being charged.
4. Green pulsing alternating with red illumination: emergency charging with reduced charging current. A fault is present, e.g. charging connector not fully inserted.
5. Lit up green: charging completed successfully.
6. Blinking green: charging for a departure time has been activated but has not yet started.
7. Lit up red: charging system is faulty or a fault has occurred.

If the charging process display continually indicates a fault in the power supply or in the charging system of the vehicle, contact a suitably qualified workshop. Volkswagen recommends using an authorised Volkswagen repairer.

Orientation lighting

The charging process display is illuminated in the dark.

✓ The vehicle has been unlocked.

✓ The charging connector has been unplugged from the charging socket.

The illumination goes out automatically after some time when the vehicle is unlocked or locked.

Troubleshooting

Charge level of the high-voltage battery low

The indicator lamp lights up yellow. A message is shown on the digital instrument cluster display.

The reserve range of the high-voltage battery has been reached.

1. Charge the high-voltage battery as soon as possible.

High-voltage battery is empty and total discharge is possible

The indicator lamp lights up yellow. The message **Charge vehicle now! Otherwise the battery may be damaged.** is shown on the digital instrument cluster display.

An empty high-voltage battery can be discharged further and damaged if the vehicle is not moved for an extended period.

1. Charge the high-voltage battery immediately.

Emergency charging of the high-voltage battery

The indicator lamp lights up white. A message is shown on the digital instrument cluster display. The charging process display on the charging socket lights up alternately green and red.

The vehicle is charged with a reduced, single-phase charging current because there is a fault present, e.g. at the connection to the charging connector.

1. Check whether a message is displayed on the charging station.

   Or: to achieve normal charging capacity again, interrupt the charging process, remove the charging connector and then connect again.
2. Make sure that the charging connector is inserted fully.
3. Start the charging process.
4. If the fault persists, continue emergency charging for a sufficient range of the vehicle.
5. Go to a suitably qualified workshop.

Also observe the notes on correct use of the charging cable *(→ Charging cable)*.

Charging not possible or aborted

The charging process display on the charging socket lights up red.

1. Connect the charging cable again.

   Or: check that the charging connector is inserted correctly.

   Or: check whether a fault is displayed on the charging station. Contact the charging station operator if necessary.
2. If the fault cannot be remedied, go to a suitably qualified workshop. Volkswagen recommends using an authorised Volkswagen repairer.

Charging will not resume automatically after a power failure. Restart the charging process.

Charging time changes for DC charging

In order to protect the high-voltage battery against overheating, the charging current is automatically reduced in the case of several successive DC charging operations, e.g. if the vehicle is driven continuously.

Fault in range calculation

The indicator lamp lights up yellow. A message is shown on the digital instrument cluster display.

There is a fault in range calculation.

1. Go to a suitably qualified workshop. Volkswagen recommends using an authorised Volkswagen repairer.

Manually releasing the charging connector

Manual release of the charging connector should only be performed if the charging connector cannot be removed normally.

✓ The vehicle is unlocked.

✓ The charging process has been completed or interrupted.

✓ The charging connector is not at an angle in the charging socket, e.g. due to the weight or position of the charging cable.

DANGER

If the charging connector remains locked unexpectedly, the cause may be a fault in the vehicle or the charging station. Live contacts may become accessible as a result of the manual release procedure. In this case, touching the contacts in the charging socket will lead to burns, other injuries or a fatal electric shock.

- Never touch the contacts in the charging socket or charging connector.

Manual release may not be possible in the case of charging for a departure time or if stationary air conditioning is active.

Manually releasing the charging connector via the central locking system

1. End the charging process.
2. Press the button on the vehicle key three times at intervals of at least 1 second.

   The turn signal must flash three times.
3. Remove the charging connector.
4. If the problem persists, manually release the charging connector in the luggage compartment.

Manually releasing the charging connector in the luggage compartment

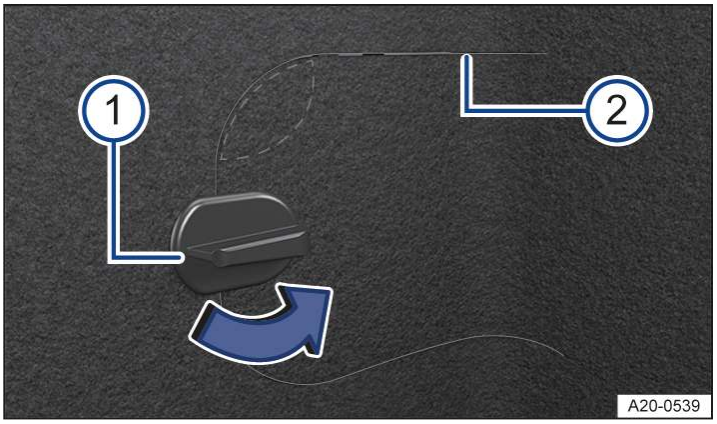

Fig. 1 In the lower right-hand side of the luggage compartment trim: flap with the coupling points.

(1) Catch.

(2) Coupling points.

Fig. 2 In the lower right-hand side of the luggage compartment trim: manual release of the charging connector.

(1) Flap with catch.

(2) Loop for manual release.

1. Check that the charging process is interrupted. The LED on the charging socket lights up white continuously or no active charging process is displayed in the Infotainment system.
2. Open the luggage compartment.
3. Rotate the flap by 90° in the direction of the arrow → *Fig. 1* (1).
4. Press in the area above the catch → *Fig. 1* (highlighted area).
5. Reach into the opening and release the flap by pulling. If necessary, use a suitable tool at the separation points → *Fig. 1* (2).
6. Open the flap → *Fig. 2* (1).
7. Pull the loop for manual release → *Fig. 2* (2).

   The charging connector can now be removed → ⚠.
8. Close the flap again.
9. Have the charging socket checked by a suitably qualified workshop. Volkswagen recommends using an authorised Volkswagen repairer.

Introduction to the topic

Charging settings can be adjusted in the Infotainment system menus. Advanced charging settings and charging planning are possible in the **Charging locations** menu, e.g. to use times of day with off-peak electricity prices.

Opening charging settings

1. Switch on Infotainment system.
2. Open the **Charging** main menu in the Infotainment system.

   The submenus with the charging functions are displayed.

Charging menu for general charging settings *(→ Charging settings)*.

Charging locations with advanced settings *(→ Charging locations)* and programming of departure times *(→ Timer-controlled charging)*.

Optimise menu for improving the DC quick-charging capacity *(→ Preconditioning)*.

Settings menu with additional functions *(→ Charging settings)*.

Direct settings for the charging process

When the charging connector is connected, a screen with charging information opens in the Infotainment system.

1. Adjust the desired values for the current charging process.

Selecting the charging method

You can select different charging methods in the Infotainment system, e.g. **Charge immediately**, **Charge for a departure time**, **Charge and air condition for a departure time**.

Availability depends on the settings at the charging location and the technical prerequisites that exist there.

1. Tap the function button for the charging methods.
2. Select the desired charging method from the list view.

General charging settings and settings menu

Charging menu

1. Open the **Charging** main menu in the Infotainment system.
2. Tap .

The following illustration shows all possible displays and function buttons in the Infotainment system. The displays may vary depending on the charging method, e.g. **Charge immediately Charge for a departure time** → *Fig. 1*.

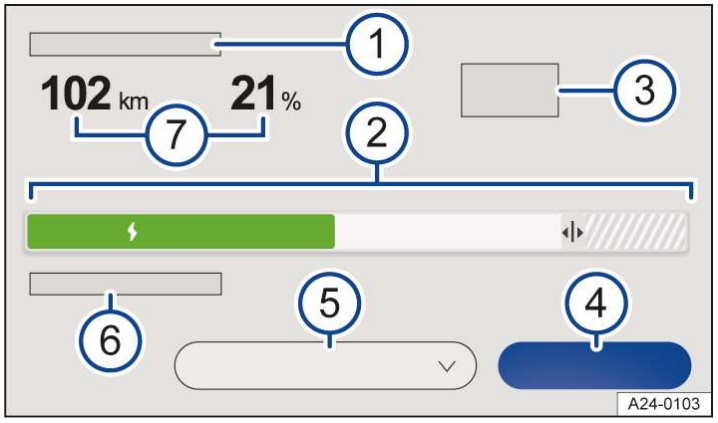

Fig. 1 Infotainment system: displays and function buttons in the Charging menu (illustration).

1
Current settings or charging location *(→ Charging locations)*.

2
Charging ranges and touch slider for the upper battery charge limit (maximum charge level) *(→ Battery charge limits)*.

3
Upper battery charge limit for immediate charging *(→ Battery charge limits)*.

Or: end time of charging or planned departure time *(→ Timer-controlled charging)*.

Or: stationary air conditioning for the departure time (depending on equipment).

4
End or restart charging *(→ Charging operations)*.

5
Change the charging method *(→ Charging settings)*.

6
Range gained during charging in km/h or km/min and charging capacity in kW.

7
Range and charge level.

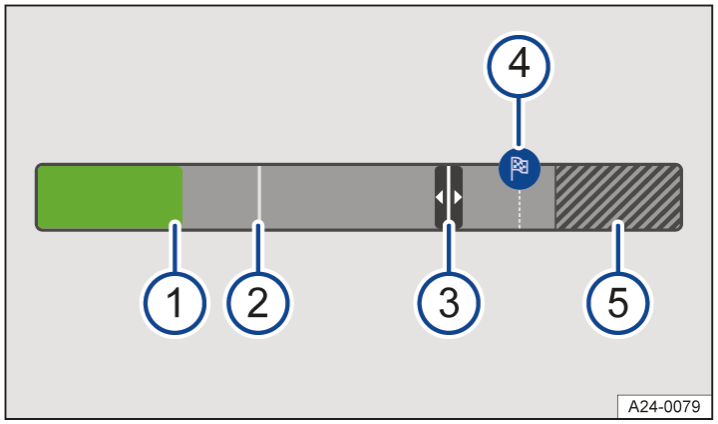

Fig. 2 Infotainment system: touch sliders and displays.

---

1 Current charge level.

(2) Set lower battery charge limit (profile of the charging location).

(3) Touch slider for the upper battery charge limit.

(4) Active navigation of the Electric Vehicle Route Planner: automatically calculated lower battery charge limit for planned charging stops.

(5) Possible charging range above Battery Care Mode, e.g. for long journeys.

In the case of electric vehicle route planning, the symbol is displayed → *Fig. 2* (3). The high-voltage battery will be charged so that the vehicle range is sufficient to at least reach the next charging stop *(→ Navigation)*. If a higher battery charge limit has been set, the vehicle will continue to charge until this is reached.

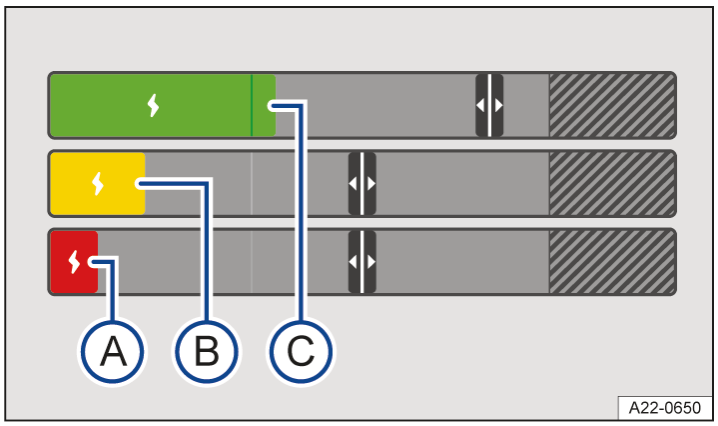

Fig. 3 Infotainment system: different charge levels of the high-voltage battery.

(A) Very low charge level.

(B) Charge level in reserve range

(C) Charge level in normal range.

Settings menu

1. Open the **Charging** main menu in the Infotainment system.
2. Tap .
3. Activate function.
   - Battery Care Mode *(→ Battery capacity)*.
   - Plug & Charge *(→ Plug and Charge)*.
   - Electric Vehicle Route Planner. Add charging stops along the route in the vehicle's navigation system *(→ Navigation)*.

     Automatic optimisation of the DC charging capacity for charging stops *(→ Preconditioning)*.
   - **Bidirectional charging** .
   - **Reduce AC charging current**: instead of using the maximum charging current that is possible with the charging cable, charging takes place with a reduced charging current of 8 A (country-dependent). The setting is recommended if several large electrical consumers are operated simultaneously via the same circuit → ⚠.
   - **Release AC charging cable automatically**: the charging connector is unlocked automatically after charging and can be removed immediately, e.g. at the charging station at home. The function depends on the country.

⚠ WARNING

Even if a reduced charging current is used, charging the high-voltage battery at an unsuitable electrical installation can cause a short circuit, electric shock, explosions and fire. There is a risk of damage, as well as serious or fatal injuries.

- Carry out charging only at a connection that has been installed and checked by qualified personnel.

Advanced settings for charging locations

Profiles for charging locations can be created in the Infotainment system. The vehicle automatically recognises a stored charging location and adopts the settings when charging.

Location data

For a new charging location, the Infotainment system saves the current location data of the vehicle.

✓ GPS data of the navigation system is available.

Creating a profile

1. Open the **Charging** main menu in the Infotainment system.
2. Open the **Charging loc.** menu.
3. Add and name the current location as a new charging location (maximum five).

Removing a profile

1. Open the **Charging loc.** menu.
2. Tap .
3. Tap to remove the stored charging location.

Settings at the charging location

All charging settings that are stored in the profile are always valid for the charging location recognised by the vehicle.

Reduce AC charging current → .

Release AC charging cable automatically. The function depends on the country.

Departure time (maximum of three) *(→ Timer-controlled charging)*.

Lower battery charge limit (0–50%) *(→ Battery charge limits)*. The high-voltage battery is charged immediately after the charging cable is connected.

Upper battery charge limit (50–100%) *(→ Battery charge limits)*.

Control by an external home energy management system (depending on vehicle equipment). The vehicle communicates with the home energy management system via the charging station .

Preferred charging times *(→ Timer-controlled charging)*.

Display showing address or GPS coordinates.

If a departure time is activated for the charging location, the charging method can be changed in the exit menu or in the **Charging** menu, e.g. to immediate charging.

Different charging settings can be stored for a charging location.

WARNING

Even if a reduced charging current is used, charging the high-voltage battery at an unsuitable electrical installation can cause a short circuit, electric shock, explosions and fire. There is a risk of damage, as well as serious or fatal injuries.

- Carry out charging only at a connection that has been installed and checked by qualified personnel.

Battery charge limits

The charge level and thus the vehicle range can be adapted to everyday needs by means of the battery charge limits in the Infotainment system.

Upper battery charge limit

The upper battery charge limit limits the maximum charge level of the high-voltage battery to a value between 50 and 100%.

Full charging of the high-voltage battery is not normally necessary in daily vehicle use.

1. Move the touch slider to the desired value in the charging settings of the Infotainment system.

The upper battery charge limit can also be adapted during charging.

Lower batter charge limit

A minimum charge level of between 0 and 50% can be set for the high-voltage battery in the profile of a stored charging location.

The vehicle starts charging immediately after power is connected and charges to a minimum range.

Only then are preferred charging times, off-peak tariffs or charging for a departure time taken into account.

1. Open the **Charging** main menu in the Infotainment system.
2. Open the **Charging loc.** menu.
3. Move the touch slider (0–50%) to the desired value in the profile of the charging location.

For optimum setting of the battery charge limits in the Infotainment system, also observe the notes on battery care *(→ Battery capacity)*.

Charging for a departure time

If a stored charging location is available in the Infotainment system, charging can be carried out for a set departure time.

Setting departure time

1. Open the **Charging** main menu in the Infotainment system.
2. Open the **Charging loc.** menu.
3. Open the profile of a charging location.
4. Open the **Charge and air condition for a departure time** submenu and make settings for the individual departure times.
   — Day of the week.
   — Time at which the high-voltage battery is to be charged.
   — Use once or weekly.

If **Repeat** has been used, the departure time profile is used every week.

Activating departure time

1. Open the profile of the charging location that is detected by the vehicle at the location.
2. Make adjustments as necessary.
3. Activate the departure time by placing a "tick" ☑ in the checkbox.

Air conditioning

The function is available depending on model.

The vehicle interior is cooled or heated for the departure time by means of the stationary air conditioning.

1. Set the desired temperature in the stationary air conditioning menu *(→ Stationary air conditioning)*.

Preferred charging times

Preferred charging times can be planned together with departure times or they can be used individually.

Charging takes place at defined times of the day.

Use this function if additional electrical consumers are operated in the household (reduction of the load in the power network) or if you want to use cheap off-peak electricity from providers.

1. Open the profile of a charging location.
2. Select **Preferred charging times** in the settings.
3. Set the start and end times.
4. Activate the function by placing a tick ☑ in the checkbox.

If no departure time has been activated, another available charging method may start, e.g. charging at preferred charging times or immediate charging.

Plug & Charge

The high-voltage battery is charged at a suitable home or public charging station as soon as the charging connector is plugged in. Manual activation for billing purposes is not necessary.

This function depends on the vehicle equipment and country.

Prerequisites

✓ The charging station supports the Plug & Charge charging function in accordance with ISO 15118.

✓ A vehicle electricity contract is stored in the vehicle with the Volkswagen app.

✓ Transmission of location data was allowed in the Infotainment system before charging *(→ Privacy settings)*.

✓ Plug & Charge was activated in the Infotainment system.

Activating a vehicle electricity contract

✓ A VW Connect contract exists.

✓ Vehicle electricity provider supports Plug & Charge.

1. Register as the primary user in the vehicle, if not already done *(→ Manage users)*.
2. For We Charge contracts, activate the Plug & Charge service in the Volkswagen app.

   Or: activate Plug & Charge for the vehicle electricity contract with the provider. The vehicle identification number (VIN) must be communicated to third-party providers for activation.

Installing the vehicle electricity contract

✓ The vehicle is online and able to send data (privacy settings) *(→ Privacy settings)*.

✓ Plug & Charge is activated as a service.

1. As the primary user, open the Plug & Charge menu in the Volkswagen app.
2. Select the desired contract and tap the installation button.

The primary user bears all the charging costs incurred when using Plug & Charge, even if these are incurred by other users.

If you have any questions about the installation and activation of Plug & Charge or online services, please use Volkswagen's Help resources .

Switching on and off

1. Open the **Charging** main menu in the Infotainment system.
2. Tap Settings.
3. Activate Plug & Charge.

The function can be used by a primary user and a guest user of the VW Connect service. The primary user can switch the function on and off in the vehicle. A guest user can only switch off the function.

Optimising DC charging

While driving, the battery temperature is optimised via the heating so that a higher charging capacity is available upon arrival at the DC quick-charging station. This shortens the charging time.

Prerequisites

✓ The vehicle's drive system has been activated.

The availability of the function depends on the vehicle equipment and country.

Optimisation is temporarily stopped when the electronic parking brake is switched on.

At high charge levels of the high-voltage battery, the maximum possible DC charging capacity can drop significantly even when the function is active.

Opening the menu

1. Open the **Charging** main menu in the Infotainment system.
2. Tap the function button.

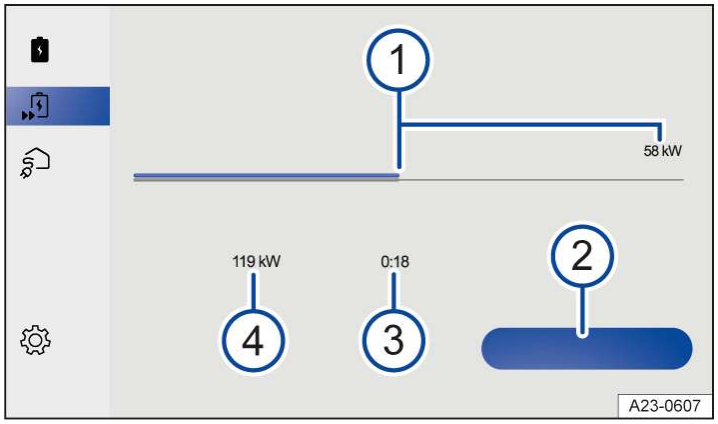

Fig. 1 Infotainment system: menu for optimising the current DC charging capacity.

1. Current DC charging capacity in kW.
2. Start or stop heating of the high-voltage battery.
3. Required time to reach the maximum DC charging capacity.
4. Maximum possible DC charging capacity.

The display may vary. No further optimisation is possible if the bar display → *Fig. 1* (1) is completely filled.

Optimising DC charging capacity for electric vehicle route planning

1. Open the menu in the navigation system *(→ Navigation)*.
2. Check that **Optimising the rapid-charging function with active route guidance** is activated and activate the function if necessary.

If electric vehicle route planning is active in the navigation system with DC charging stops, the necessary heating time is calculated automatically. The heating switches on before the next charging stop.

At the charging stops on a route, the DC charging capacity displayed in the Infotainment system may vary.

Optimising the DC charging capacity manually

The function can be started in the Infotainment system without active electric vehicle route planning, e.g. before arriving at a quick-charging station.

1. Open the **Optimise** menu.
2. Tap the Start battery heating function button.

   Heating starts and the required time is displayed.

Charging with solar power

If the household's solar power system produces a surplus of energy, the high-voltage battery is charged with the solar power of the home energy management system.

Prerequisites

✓ Compatible home energy management system.

✓ Compatible charging station.

✓ A charging location has been created in the Infotainment system.

Ask a suitably qualified workshop for information on suitable home energy management systems. Volkswagen recommends using an authorised Volkswagen repairer.

Function

Observe the operating instructions provided by the home energy management system manufacturer.

The vehicle charges according to the specifications of a home energy management system.

If a lower battery charge limit is set at the charging location in the vehicle's Infotainment system, the charging process may initially start with conventional domestic electricity. Available solar power is used for the further charging process.

Solar-powered charging is also possible with an activated departure time.

Selecting solar-powered charging in the Infotainment system

1. Connect the vehicle to the home energy management system.
2. Tap the drop-down list for the charging process in the Infotainment system, e.g. in the **Charging** menu.
3. Select Charge using solar power.

   The charging process starts automatically.

Depending on the current infeed power of the solar power installation and the current domestic load situation, charging may start earlier than usual and continue later. If necessary, the vehicle will automatically regulate the available charging phases for safety reasons.

Charging times and charging planning

The vehicle creates a charging plan and uses charging times when solar power is available or when the electricity prices of a provider are cheap. A solar power forecast of the home energy management system can also be taken into account. The preferred charging times set in the charging location profile no longer apply to this function *(→ Charging locations)*.

Domestic power monitor

The current domestic power flow is monitored during the charging process. Before an overload of the power grid can occur, the vehicle automatically reduces the charging current.

Bidirectional charging

The high-voltage battery is used as an additional buffer of unused energy from the home. If necessary, the vehicle can supply energy back into the home.

Prerequisites

The availability of bidirectional charging in the vehicle is country-dependent. This also applies with respect to a suitable home energy management system.

✓ Vehicle with a suitable high battery capacity.

✓ Compatible home energy management system with energy storage unit.

✓ A charging location has been created in the Infotainment system.

First ask a suitably qualified workshop for information on home energy management systems that are suitable for this. Volkswagen recommends using an authorised Volkswagen repairer.

Function

The home energy management system controls the charging and discharging processes of the high-voltage battery as required, e.g. based on the availability of solar power, and performs the required adjustments in the vehicle.

In addition, the energy from the high-voltage battery can be used for an emergency power mode, e.g. for a household without a mains connection or in the event of a power failure.

Read and observe the operating instructions and functions of the home energy management system.

Emergency power mode is displayed only in the home energy management system.

Discharging is possible only when the battery temperature is between around -15°C (around +5°F) and around +40°C (around +104°F). This does not apply to emergency power operation of the home energy management system.

Selecting bidirectional charging and discharging in the Infotainment system

1. Connect the vehicle to the home energy management system.
2. Tap the drop-down list for the charging process in the Infotainment system, e.g. in the **Charging** menu.
3. Select Bidirectional charging or Discharge.

   The charging or discharging operation starts automatically.
4. Check the desired battery charge limits in the profile of the charging location and adjust if necessary.

The upper battery charge limit for charging is restricted to a maximum of 80%.

Charging for a departure time is not possible with bidirectional charging.

Restricting power extraction from the high-voltage battery

1. Set the lower battery charge limit in the charging location profile to the desired value.

The charge level drops to a maximum of 20% during discharging.

You can view the amount of power extracted and the current charging or discharging power on the home energy management system. The vehicle discharges with a maximum power of around 10 kW.

When the intended operating time (4000 h) or amount of energy (10000 kWh) in the ⚙ **Settings** menu is used up, only charging controlled by the infrastructure is available within the bidirectional charging function. The discharge function is no longer available. Please contact an authorised Volkswagen repairer for further information.

Malfunctions

In the event of a malfunction, e.g. in the communication with the home energy management system, bidirectional charging may be cancelled. Alternatively, the vehicle can switch automatically to the **Charge now** charging method.

1. Remove the charging connector.
2. Connect the vehicle to the charging station again.
3. If the fault persists, contact the customer service of the device manufacturer or visit a suitably qualified workshop. Volkswagen recommends using an authorised Volkswagen repairer.

Introduction to the topic

Instructions for charging cable

The charging cable supplied with the vehicle depends on the scope of delivery and the country-specific technical requirements, e.g. charging connector connections for mains sockets.

Volkswagen recommends that you use only the supplied charging cable and observe the following instructions for the charging cable →⚠, →⚠.

— Handle with care.

— Unwind or wind up completely.

— Do not fold or bend over sharp edges.

— Do not trap or drive over cable.

— Pull only at the charging connectors.

— Children must not use the charging cable.

— Keep animals away from cable.

— Stow safely without kinks after use.

⚠ DANGER

Use of a damaged charging cable or a charging cable that has been tampered with can lead to an electric shock. This will result in serious or fatal injuries.

- Always check the charging connectors and charging cable for damage, e.g. cracks, before use.
- Never open the charging cable and its components.
- Never use a damaged charging cable or a charging cable that has been tampered with.
- Have the charging cable checked by a suitably qualified workshop if there is a malfunction. Volkswagen recommends using an authorised Volkswagen repairer.

⚠ WARNING

If the high-voltage battery is charged with an unsuitable charging cable, this can cause a short circuit and an electric shock. This can damage the charging cable and result in serious or fatal injuries.

- Please always observe the specifications given on the charging cable.
- Make sure to find out the type of electrical installation available locally before travelling abroad.
- Before driving abroad, find out about the correct country-specific charging cable and the maximum permissible charging current.

Stowing the charging cable

⚠ WARNING

An unsecured or incorrectly secured charging cable can be flung through the vehicle interior in the event of sudden driving or braking manoeuvres. This can result in accidents and severe injuries.

- Stow the charging cable in the supplied charging cable bag and hook the bag into a front fastening ring in the luggage compartment (depending on equipment).
- If the rear seat backrest has been folded forward, stow the charging cable in the charging cable bag in the footwell in front of the rear seat.

Instructions for charging connectors and charging cable protection unit

— Do not reach into the contacts of the charging connector.

— Protect against intense sunlight. The ambient temperature must not be higher than 50°C (122°F).

— Do not drop.

— Protect against submerging in liquids, such as rainwater.

— Fit the protective caps after use.

WARNING

If the charging cable for mains power sockets is connected or used incorrectly, this can lead to a serious malfunction. This can result in damage to the electrical installation and the charging cable, and can also cause a fire and serious injuries.

- Never connect the charging cable to an extension cable, a cable reel, a multiple socket outlet or an adapter such as a regional adapter or timer.

The charging cable may be subject to a regular testing requirements as mobile electrical equipment. A test adapter is required.

Comply with the maximum load for the safety circuit used. If the charging cable is connected to a mains socket with other electrical consumers in the same electrical circuit, the fuse in the electrical circuit can be tripped.

Charging cables must be disposed of in an environmentally friendly way and must not be disposed of as household waste.

Cleaning the charging cable

1. Wipe the surface of the charging cable with a dry or only slightly moistened cloth →, →.

DANGER

When cleaning a plugged-in charging cable, there is a risk of coming into contact with the voltage of the high-voltage system. This can lead to an electric shock with burns and serious or fatal injuries.

- Clean the charging cable only when it is disconnected.

NOTICE

If the charging cable is not cleaned correctly, this can result in damage.

- Use only water on the surface and no additional cleaning agents.
- Make sure that no water gets into the contacts of the charging cable.

Charging cable for charging stations with alternating current (AC)

Fig. 1 Charging cable for charging stations with alternating current (AC).

The maximum charging current is 16 A or 32 A and depends on the infrastructure used, the charging cable and the equipment of the battery charger.

WARNING

If the charging cable for charging stations is used as an extension cable, it is unlocked and a serious malfunction can occur. This can result in damage and can also cause a fire and serious injuries.

- Never use the charging cable as an extension of another charging cable.

NOTICE

Incorrect operation of the charging station can damage the vehicle's high-voltage system.

- Observe the manufacturer’s information and instructions when using the charging station.

The electrical installation abroad may be designed according to different technical rules than in your own country. This means that a charging cable with a cross-section of 5 x 6 mm2 may be required locally to achieve the maximum charging capacity available.

Charging with a charging cable with a rating of 16 A is not possible at some charging stations that support 32 A. This depends on the equipment of the charging station.

— Inform yourself about the available charging technology before charging.

Charging cable for mains power sockets

Fig. 1 Charging cable for mains sockets (illustration)

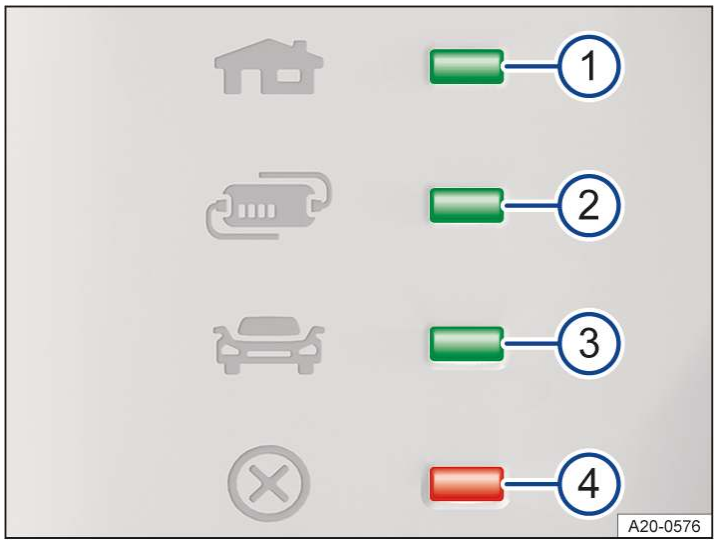

Fig. 2 Charging cable protection unit: LED lights.

1. Indicator lamp for plug and power supply.
2. Indicator lamp for protection unit
3. Indicator lamp for vehicle
4. Fault warning lamp.

Information on the charging cable

Before using the charging cable, also pay attention to the information on the charging cable and on the rear of the protection unit.

Charging cables that were supplied with the vehicle outside Norway may not be suitable for charging from a mains socket in Norway.

Protection unit

The charging connector is de-energised by the electronic protection unit until it is inserted in the vehicle's charging socket.

Self-test

When the charging cable is connected to a mains socket, the protection unit will automatically perform a self-test. All warning and indicator lamps will briefly light up and go out one after another. The current operating status is then displayed.

Status indicators

One or more indicator lamps on the protection unit light up green → *Fig. 2* (1), (2) or (3).

Display and meaning
— (1) Lit up: The charging cable is connected to the mains network but not to the vehicle. — (1), (2) lit up, (3) flashing: High-voltage battery is being charged. — (1), (2) and (3) lit up: Charging process ended. High-voltage battery has been charged.

Setting charging current

The charging cable limits the charging current corresponding to the available power supply.

Depending on the equipment, the charging current can be reduced in the charging settings of the Infotainment system if charging is not to take place with the maximum charging current at the local power supply *(→ Timer-controlled charging)*.

Temperature monitoring

The temperature monitoring function of the charging cable is triggered if the charging cable overheats, e.g. due to storage in an overheated luggage compartment or strong sunlight.

If charging is interrupted, the current status indicator goes out and one of the indicator lamps flashes green. The warning lamp → *Fig. 2* (4) flashes red.

1. Remove the charging cable and leave it to cool.
2. If the fault occurs again, go to a suitably qualified workshop. Volkswagen recommends using an authorised Volkswagen repairer.

It is not necessary to remove the charging cable if only the warning lamp → *Fig. 2* (4) flashes red and the status indicator remains lit. Charging will take place with a lower charging current until the charging cable has cooled down after a certain period. The charging current will be increased again automatically.

Fault displays

If the warning lamp → *Fig. 2* (4) flashes or lights up red without an indicator lamp → *Fig. 2* (1), (2) or (3) being lit continuously, there is a fault present.

Display and meaning
— (1) flashing, (4) lit or flashing: Fault in the power supply. — (2) flashing, (4) lit or flashing: Fault in the safety device. — (3) flashing, (4) lit or flashing: Vehicle malfunction.

The charging process will be interrupted or aborted.

1. Observe the information on the rear of the protection unit.
2. If the fault persists, go to a suitably qualified workshop. Volkswagen recommends using an authorised Volkswagen repairer.

If the vehicle is connected to the power grid via an additional connection or is located in direct proximity to high-voltage lines during the charging process, charging at a mains socket may not be possible. Additional connections to the power grid:

— Connection of a charger for 12-volt vehicle battery.

— Contact with working equipment connected to the power grid, e.g. lifting platform.

Troubleshooting

Protective device of charging cable for the mains power socket switches off

If external electrical devices are used on the vehicle at the same time, e.g. refrigerator box, a fault will be detected during the self-test of the protective device.

1. Connect the charging cable to the external power supply.
2. Plug the charging connector into the charging socket.

Introduction to the topic

Observe any country-specific legislation when securing your vehicle in the event of a breakdown.

WARNING

In the event of a sudden driving or braking manoeuvre or accident, a loose breakdown set, spare wheel, temporary spare wheel or loose vehicle toolkit could be flung though the vehicle interior. This can result in serious or fatal injuries.

- Always ensure that the vehicle toolkit, breakdown set and spare wheel or temporary spare wheel are always properly secured in the luggage compartment.

WARNING

Working with unsuitable tools or damaged tools from the vehicle toolkit can lead to accidents. This can result in serious or fatal injuries.

- Never work with unsuitable or damaged tools from the vehicle toolkit.
- Seek expert assistance if no suitable vehicle tools are available.

Stowage

The vehicle toolkit may be located in various places in the vehicle, such as under the luggage compartment floor or in a side stowage area of the luggage compartment.

Depending on the equipment level, the luggage compartment may contain a loose box with the vehicle toolkit. This enclosed vehicle toolkit is intended for a possible winter tyre change and does not need to be carried in the vehicle at all times .

Contents of the vehicle toolkit

The scope of the on-board tool kit depends on the country and equipment. The following describes the maximum content.

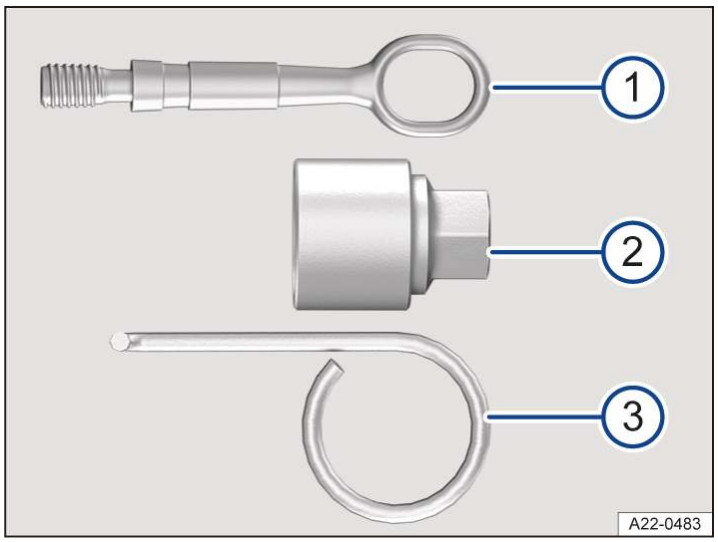

Fig. 1 Contents of the toolbox (illustration).

1. Screw-in towing eye.
2. Adapter for the anti-theft wheel bolt. Volkswagen recommends that you carry the wheel bolt adapter in the vehicle toolkit at all times. The code number of the anti-theft wheel bolt is stamped on the front of the adapter. You will need this number to replace the adapter if it is lost. Make a note of the code number for the anti-theft wheel bolt and keep it in a safe place – but not inside the vehicle.
3. Hook for pulling off the centre covers, wheel covers and the wheel bolt caps.

Additional vehicle tools

Depending on equipment, vehicles may have additional vehicle tools with a jack. It is not necessary to always carry the additional vehicle tools with jack in the vehicle.

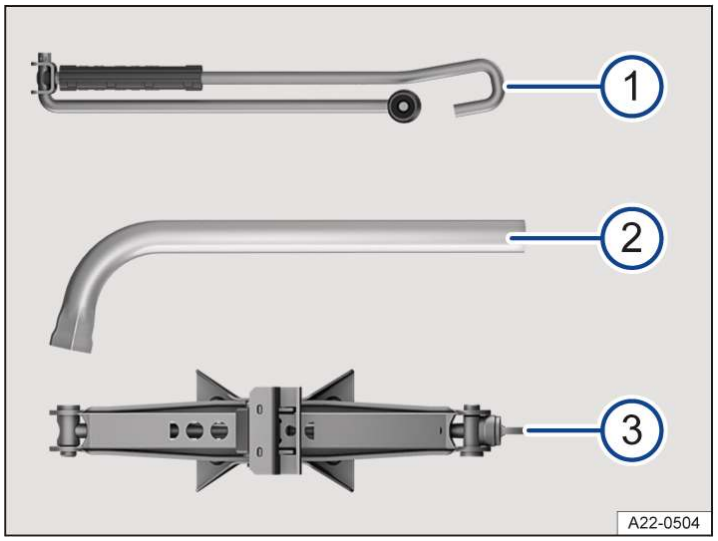

Fig. 2 Additional tools in the vehicle toolkit (illustration).

1. Crank.
2. Wheel wrench for loosening and tightening the wheel bolts.
3. Jack.

After using the jack, crank it back to its original position so that it can be stowed safely.

Servicing the jack

If a jack is included in the vehicle toolkit, it is not generally subject to any maintenance intervals.

1. Grease the jack with a universal lubricant when necessary.

Tyre pressure gauge

In some countries, there may also be a tyre pressure gauge in the vehicle.

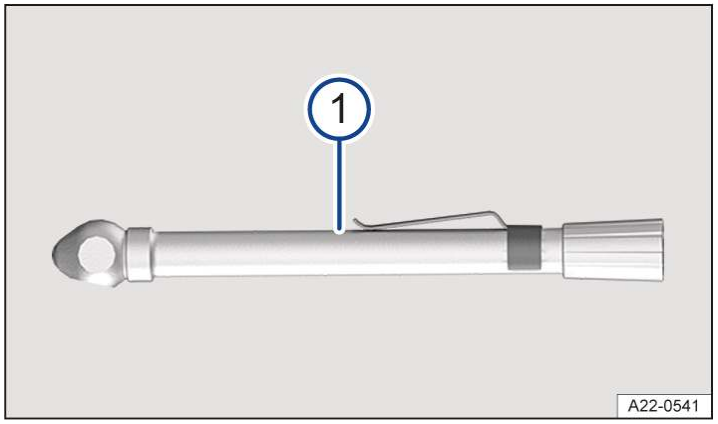

Fig. 3 Additional tool in the vehicle toolkit (illustration).

(1) Tyre pressure gauge (country-dependent).

Moving the windscreen wipers to service position

The wiper arms can be lifted off the windscreen when in the service position.

Fig. 1 Wipers in service position (illustration).

Activating the service position via the wiper lever

1. Close the bonnet.
2. Switch the ignition on and then off again.
3. Operate the flick wipe function *(→ Wipers)*.

Activating the service position via the Infotainment system

Depending on equipment, the windscreen wipers can be moved to the service position via the Infotainment system.

To move the windscreen wipers to the service position via the Infotainment system, carry out the following actions:

1. Switch on the ignition.
2. Tap the function button.
3. Tap the Vehicle function button.
4. Tap the Service function button.
5. Activate the service position of the windscreen wipers.

Activating the service position via the exit menu

The service position of the wiper blades can also be activated for a limited period in the exit menu. The ignition must be switched off for this.

Lifting the windscreen wiper arms

1. Move the wiper arms to the service position before lifting →.
2. Hold and lift the wiper arms only in the area of the wiper blade mounting.

Placing the wiper arms on the windscreen

1. Before starting your journey, take hold of the wiper arms carefully and only in the area of the wiper blade mounting and place them on the windscreen.
2. To move the wiper arms back to their starting position, operate the “flick wipe” function with the ignition switched on *(→ Wipers)*.

   The wiper arms move back to their initial position.

NOTICE

If due care is not taken when working on the wiper arms, this can result in damage to the bonnet, windscreen or wiper arms.

- Lift the wiper arms carefully and always only when in service position.
- Never open the bonnet when the wiper arms have been lifted.
- Always place the wiper arms carefully back on the windscreen before starting a journey.

Cleaning and changing wiper blades

The factory-fitted windscreen wiper blades are coated with graphite. The graphite coating ensures that the wiper blade moves quietly over the window. If the graphite coating is damaged, the wiper will become louder.

— Check the condition of the wiper blades on a regular basis.

— Wiper blades that judder should be changed if damaged or cleaned if dirty →⚠.

Damaged wiper blades should be replaced immediately. Wiper blades are available from a suitably qualified workshop. Volkswagen recommends using an authorised Volkswagen repairer.

Cleaning wiper blades

1. Move the wiper arms to the service position *(→ Wiper blades)*.
2. Lift the wiper arms, holding hold them only in the area of the wiper blade mounting.
3. Clean the wiper blades carefully using a damp sponge →ⓘ.
4. Place the wiper arms carefully back onto the windscreen.

Changing the windscreen wiper blades

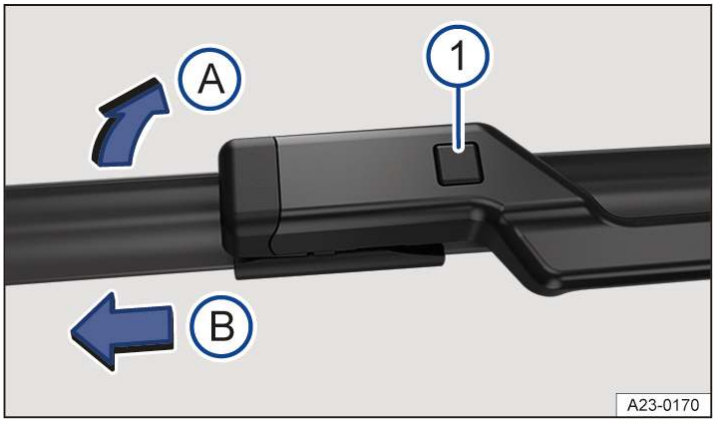

Fig. 1 Changing the windscreen wiper blades.

(1)	Release button for the wiper blade.

1. Move the wiper arms to the service position before lifting *(→ Wiper blades)*.
2. Lift the wiper arms, holding hold them only in the area of the wiper blade mounting.
3. Press and hold the release button → *Fig. 1* (1).
4. Tilt the wiper blade in the direction of the wiper arm → *Fig. 1* (A) and pull it off in the direction of the arrow (B) at the same time. You may need to use some force to do this.
5. Insert a new wiper blade with the same length and design onto the wiper arm against the direction of the arrow. Push it on until it engages → *Fig. 1* (B). The wiper blade must be in folded-down position to do this → *Fig. 1* (A).
6. Place the wiper arms carefully back onto the windscreen.

Changing the wiper blade for the rear window

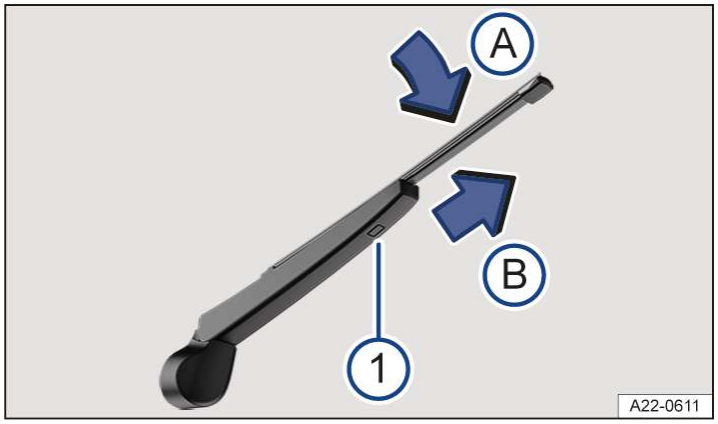

Fig. 2 Changing the wiper blade for the rear window.

(1) Release button for the wiper blade.

1. When lifting a wiper arm, hold it only in the area of the wiper blade mounting.
2. Lift and fold back the wiper arm.
3. Press and hold the release button → *Fig. 2* (1).
4. Tilt the wiper blade in the direction of the wiper arm → *Fig. 2* (A) and pull it off in the direction of the arrow (B) at the same time. You may need to use some force to do this.
5. Insert a new wiper blade with the same length and design onto the wiper arm against the direction of the arrow. Push it on until it engages → *Fig. 2* (B). The wiper blade must be in folded-down position to do this → *Fig. 2* (A).
6. Carefully place the wiper arm back onto the rear window.

WARNING

Worn or dirty windscreen wiper blades reduce visibility and increase the risk of accidents and severe injuries.

- Always clean dirty wiper blades.
- Always change the wiper blades if they are damaged or worn and no longer clean the windscreen properly.

NOTICE

Cleaning the wiper blades or windows with unsuitable cleaning agents can cause damage.

- Do not use fuel, nail varnish remover, paint thinner or similar liquids to clean the wiper blades and windows.
- Do not clean the wiper blades with hard sponges and other sharp objects.

If wax residue from car washes and other care products remains on the vehicle windows, this can cause the wipers to rub. Remove wax residue using a special cleaning product or cleaning cloths.

Introduction to the topic

Before changing a bulb, check whether a bulb or LED light unit has failed. You can normally change bulbs yourself. If the exterior lighting uses LED technology, depending on model and vehicle equipment, it is not possible for you to change the LED light units or individual LEDs yourself. If individual LEDs fail, this may be an indication that other LEDs are on the point of failure too. In this case, have the LED light units checked and renewed if necessary at a suitably qualified workshop. Volkswagen recommends using an authorised Volkswagen repairer.

It may be illegal to drive with faulty exterior lights.

Additional bulb specifications

Some bulbs might have factory specifications that differ from standard bulbs. The designation is inscribed on the bulb, either on the glass part or on the base.

WARNING

If the vehicle lighting is not switched on as appropriate for the weather conditions, the road will not be illuminated sufficiently. Other road users may have difficulty seeing the vehicle or may not see it at all. This can cause accidents and serious or fatal injuries.

- Check the lighting system and turn signals of the vehicle regularly.
- Have the lighting system repaired immediately if necessary.

WARNING

When working in the bonnet space, accidents and serious injuries can be caused as a result of bulb changes that are not performed correctly.

- Always follow the described work steps and observe the general safety precautions.
- Never change a bulb unless you know exactly how to carry this out.
- If you are uncertain about how to change a bulb, have the work carried out by a suitably qualified workshop. Volkswagen recommends using an authorised Volkswagen repairer.

WARNING

When changing bulbs, sharp-edged parts on the bulb housings or hot or exploding bulbs can cause serious injuries.

- Change bulbs only when they have cooled down completely.
- Always protect your hands when changing bulbs.

NOTICE

If water enters the headlight housing, it can cause damage to the electrical system.

- Always fit the covers on the headlight housing after changing bulbs.
- Always check that the covers are secured correctly after fitting.

NOTICE

If the glass part of the bulb is touched when changing lamps, fingerprints may be left on the lamp. When the light is switched on, the fingerprints will evaporate due to the heat of the lamp and the reflector will become cloudy.

- Do not touch the glass part of the bulb with unprotected fingers. Use textile gloves, for example.
- When installing a lamp, always hold it by the base only.

Information on changing bulbs

Always carry out the following actions for changing a bulb in the given order → ⚠:

1. Park the vehicle safely on horizontal and firm surface, where possible at a safe distance from moving traffic *(→ Parking)*.
2. Switch on the electronic parking brake.
3. Switch off the light.
4. Move the turn signal and main beam lever to neutral position.
5. Deactivate the vehicle's drive system.
6. Allow the orientation lighting to go out.
7. Leave the defective bulbs to cool down.
8. Check to see if a fuse has visibly blown *(→ Fuses)*.
9. Follow the instructions to change the affected bulb → ⚠.

   Always replace bulbs with identical bulbs of the same type. The designation is inscribed on the bulb, either on the glass part or on the base.

   Do not touch the glass part of the bulb with unprotected fingers. The remaining fingerprint can impair the luminous power of the headlight.
10. After changing a bulb, check to ensure that the bulb is working properly.

    If the bulb is not working properly, the bulb may not have been inserted properly, may have failed again, or the connector may have been fitted incorrectly.
11. Each time you change a bulb at the front of the vehicle, the headlight settings should be checked by a suitably qualified workshop. Volkswagen recommends using an authorised Volkswagen repairer.

⚠ WARNING

If the described activities for changing bulbs are not observed, this can lead to accidents. This can result in serious injuries.

- Always follow the described work steps and observe the general safety precautions.

NOTICE

Improper removal and refitting of trim panels and headlights can cause damage the vehicle's paint and bodywork.

- Remove the headlights and trim carefully and fit them again carefully.

Replacing bulbs in LED headlights

Preparations

The steps should be carried out in the given order only:

1. Observe the information on changing bulbs and carry out the work steps *(→ Exterior lighting)*.
2. Open the bonnet.

The headlight does not have to be removed when changing the bulb.

Changing bulbs in the turn signals

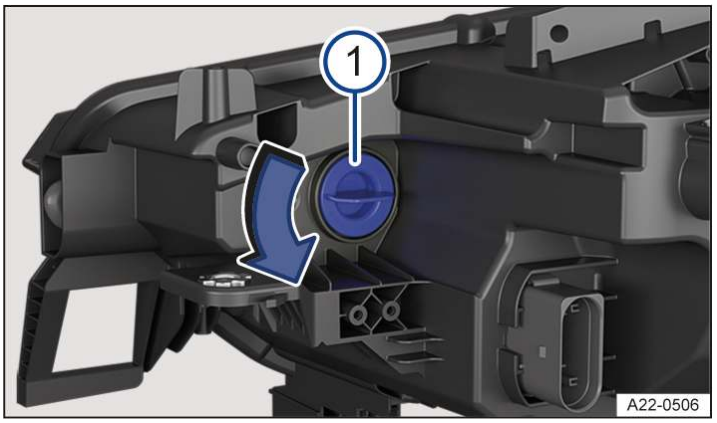

Fig. 1 In the bonnet space on the right: rear of the headlight.

(1) Turn signal bulb holder.

1. Turn the bulb holder in the direction of the arrow and pull it out → *Fig. 1* (1).
2. Replace the defective bulb with a new bulb of the same type.
3. Carefully insert the bulb holder into the headlight and turn it as far as it will go in the opposite direction to the arrow → *Fig. 1* (1).
4. Close the bonnet.

The illustration shows the right-hand headlight from the rear. The left-hand headlight is a mirror image of the one shown.

Introduction to the topic

At the time of publication we are unable to provide an complete overview of the locations of the fuses for the electrical consumers. This is because the vehicle is under constant development, because fuses are assigned differently depending on the vehicle equipment level and because several electrical consumers may use a single fuse. You can obtain more information about the fuse assignment from a suitably qualified workshop. Volkswagen recommends using an authorised repairer.

Several electrical consumers can share a single fuse. Conversely, a single consumer could have more than one fuse.

Therefore fuses should only be replaced when the cause of the fault has been rectified.

1. If a new fuse blows again shortly after fitting, have the electrical system checked by a suitably qualified workshop. Volkswagen recommends using an authorised repairer.

Fuses for emergency services

A fuse for the high-voltage system in the dash panel fuse box is labelled with a special tag to allow emergency services to de-energise the vehicle as quickly as possible. Never attempt to replace these fuses or swap them with other fuses in other slots → ⚠. If this fuse is faulty, always have it replaced by a suitably qualified workshop. Volkswagen recommends using an authorised repairer.

⚠ WARNING

The voltage in the high-voltage system can cause electric shocks, serious burns and death.

- Never touch the electrical cables in the bonnet space.
- Never repair or replace fuses of the high-voltage system yourself.
- Always have work performed by a suitably qualified workshop. Volkswagen recommends using an authorised repairer.

⚠ WARNING

Using unsuitable fuses, repairing fuses and bridging an electrical circuit without fuses can cause serious damage or a fire in the vehicle. This can result in serious or fatal injuries.

- Replace fuses only with fuses with the same rating and size. Make sure that the colour and markings are identical to the defective fuse.
- Never repair fuses.
- Never use a metal strip, paper clip or similar objects to replace a fuse.

NOTICE

The high-voltage fuses identified with special tags in the fuse box in the dash panel are intended for use only by the emergency services so that they can de-energise the vehicle in an emergency situation. If these high-voltage fuses are removed improperly, this can result in damage to the vehicle.

- Never remove the specially tagged fuses in the dash panel.
- Seek expert assistance if the high-voltage system was switched off. The vehicle is no longer ready to drive.

NOTICE

If a fuse is replaced when the ignition is switched on, the vehicle's drive system is activated, lights are switched on or when other electrical consumers are switched on, this can damage the electrical system.

- Always deactivate the vehicle's drive system and switch off the lights and other electrical consumers.
- Make sure that it is not possible to activate the vehicle's drive system when changing a fuse.

NOTICE

Damage can also be caused at other locations in the electrical system if a fuse is replaced with a fuse that has a higher rating.

- Never replace a fuse with a fuse that has a higher rating.

NOTICE

Dirt and moisture in the fuse boxes can damage the electrical system.

- Protect open fuse boxes against the ingress of dirt and moisture.
- Avoid causing short circuits in the electrical system.
- Check that the covers of the fuse boxes are closed tight again and are not damaged.

There are also other fuses in the vehicle. These should be changed only by a suitably qualified workshop. Volkswagen recommends using an authorised repairer.

Fuses in the bonnet space

Opening the fuse box in the bonnet space

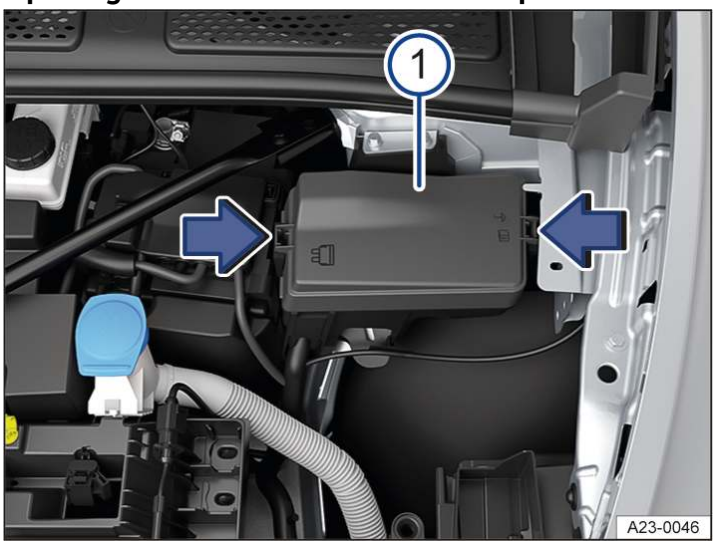

Fig. 1 In the bonnet space: fuse box (illustration).

(1) Fuse box cover.

In some vehicles, a pair of plastic grippers for removing fuses is located on the inside of the cover of the fuse box or on the fuse carrier.

Removing the cover

1. Open the bonnet.
2. To unlock the fuse box cover, push the catches in the direction of the arrow → *Fig. 1* (1).
3. Lift off the cover.

Installing the cover

1. Place the cover on the fuse box.
2. Press the cover down until the cover audibly engages into position on both sides.

Fuse table for fuses in the bonnet space

The list shows the fuse locations of the electrical consumers relevant for the driver. The first column in the table contains the location. The other columns contain the amp rating, the fuse type and the consumer protected by the fuse.

Depending on country and on the equipment of your vehicle, the fuse numbers and positions may differ to those given in the table. If necessary, ask a suitably qualified workshop for the exact fuse layout. Volkswagen recommends using an authorised Volkswagen repairer.

Fuse assignment

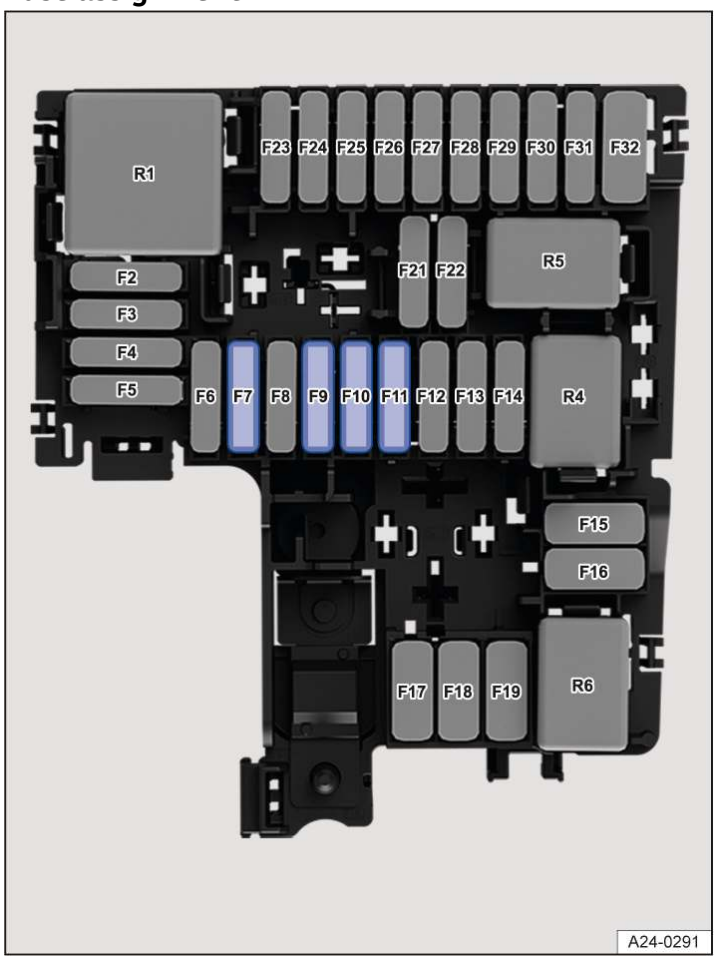

Fig. 1 In the bonnet space: fuse locations.

Fuse location → *Fig. 1*:

F7

30 amps, ATO®, front wipers, right

F9

15 amps, ATO®, horn.

F10

30 amps, ATO®, front wipers, left

F11

7.5 amps, ATO®, air conditioning system.

Fuses in the dash panel

Opening the fuse box in the dash panel (left-hand drive vehicle)

Fig. 1 On the driver side: fuse box cover in the dash panel (left-hand drive vehicle)

Removing the cover

1. Reach behind the cover and pull off in the direction of the arrow → *Fig. 1*.

Installing the cover

1. Align the cover on the opposite side and fold it closed in the opposite direction to the arrow until it engages → *Fig. 1*.

Opening the fuse box in the dash panel (right-hand drive vehicle)

Fig. 2 On the front passenger side: fuse box cover in the dash panel (right-hand drive vehicle)

Removing the cover

1. Open the glove box and empty if necessary.
2. Pull off the cover from above in the direction of the arrow → *Fig. 2*.

Installing the cover

1. Fit the cover in the opposite direction to the arrow until it engages at the top → *Fig. 2*.
2. Close the glove compartment.

Fuse overview of the fuses in the dash panel

The overview shows the fuse locations of the electrical consumers relevant for the driver. The first column in the overview contains the location. The other columns contain the amp rating, the fuse type and the electrical consumer protected by the fuse.

Depending on country and on the equipment of your vehicle, the fuse numbers and positions may differ to those given in the overview. If necessary, ask a suitably qualified workshop for the exact fuse layout. Volkswagen recommends using an authorised Volkswagen repairer.

Fuse assignment

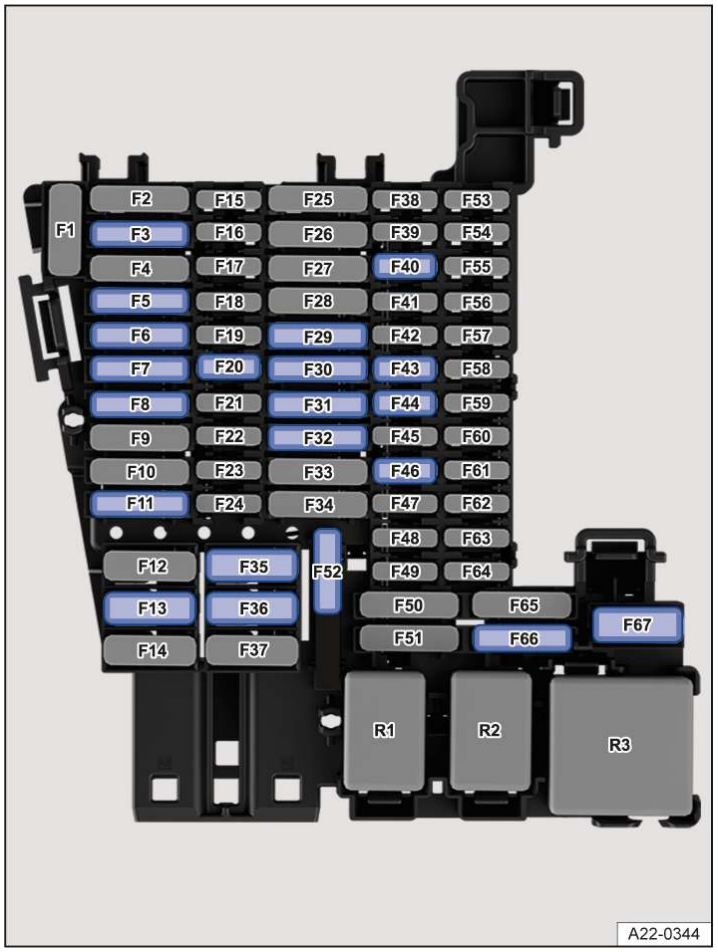

Fig. 1 In the dash panel: fuse assignment.

Fuse location → *Fig. 1*:

F5

25 amps, ATO®, left exterior lighting.

F6

30 amps, ATO®, interior lighting.

F7

30 amps, ATO®, seat heating.

F8

20 amps, ATO®, sliding headliner in glass roof.

F13

40 amps, MAXI+®, central locking.

F20

15 amps, MINI®, telephone, USB port.

F30

20 amps, ATO®, parts for the Infotainment system.

F32

25 amps, ATO®, right exterior lighting.

F36

40 amps, MAXI+®, blower regulator.

F40

7.5 amps, MINI®, anti-theft alarm.

F43

7.5 amps, MINI®, air conditioning block, rear window heating relay.

F44

7.5 amps, MINI®, light switch (dipped beam), rain and light sensor, background lighting, ID. Light.

F46

7.5 amps, MINI®, display, Infotainment system control panel.

F52

20 amps, ATO®, sockets. Please note installation position, factory-fitted fuse location as shown in the illustration.

F66

15 amps, ATO®, rear window wiper.

F67

30 amps, MAXI+®, rear window heating.

Fuse locations for vehicles with factory-fitted bicycle carrier preparation:

F3

25 amps, ATO®, control unit for trailer detection, left

F11

15 amps, ATO®, control unit for trailer detection

F29

15 amps, ATO®, control unit for trailer detection

F31

25 amps, ATO®, control unit for trailer detection, right

Electric windows and electrically adjustable seats may be protected by circuit breakers or control units which switch on again automatically a few seconds after the overload, e.g. frozen windows, has been rectified.

Changing blown fuses

Preparations

1. Deactivate the vehicle's drive system and switch off the lights and all electrical consumers.

Detecting a blown fuse

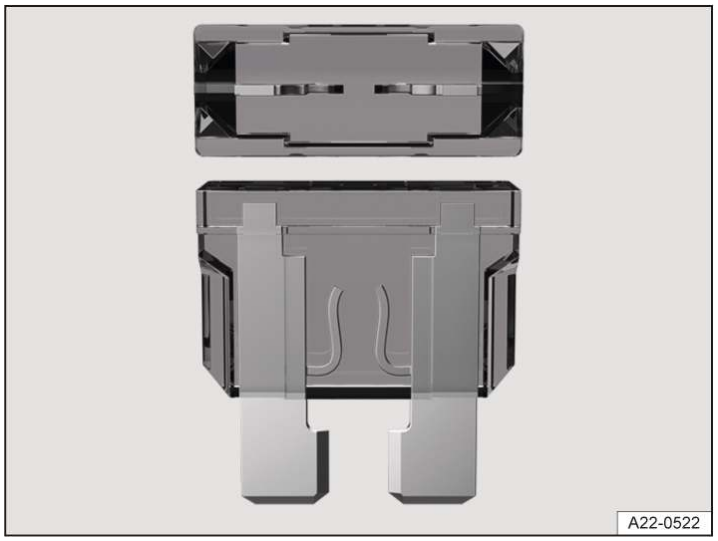

Fig. 1 Blown fuse (illustration).

1. Shine a torch onto the fuse box.

You can see if a fuse is blown from the top and side through the transparent housing due to the melted metal strip → *Fig. 1*.

Fuse types

— Standard flat blade fuse (ATO®).

— Small flat blade fuse (MINI®).

— Large flat blade fuse (MAXI® or MAXI+®).

Colour coding of fuses

Fuses (ATO® - MINI® - MAXI® and MAXI+®).

Colour

Amp rating

Black

1 amps

Purple

3 amps

light brown

5 amps

Brown

7.5 amps

Red

10 amps

Blue

15 amps

Yellow

20 amps

White or transparent

25 amps

Green

30 amps

Orange

40 amps

Red

50 amps

Changing fuses

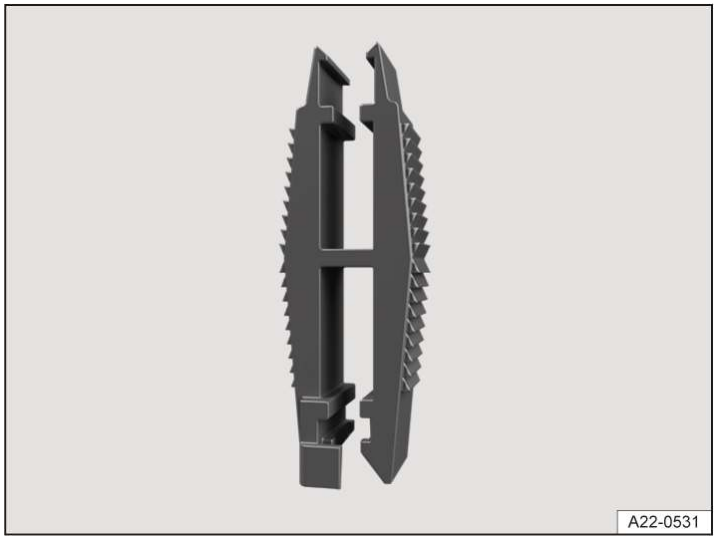

Fig. 2 Plastic grippers for pulling out and inserting a fuse (illustration).

1. If present, take the plastic grippers out of the fuse box or the cover of the fuse box → *Fig. 2*.
2. Push the plastic grippers clip suitable for the fuse type onto the fuse from the top or the side.
3. Remove the fuse.
4. If the fuse has blown, replace it with a new fuse with the same rating (same colour and same markings) and same size →.
5. Once the new fuse has been inserted, put the plastic grippers back in the cover.
6. Insert the cover again or close the fuse box cover.

NOTICE

You can damage another location in the electrical system by using a fuse with a higher amp rating.

- Never replace a fuse with a fuse that has a higher rating.

Introduction to the topic

For technical reasons, your vehicle may not be push-started →ⓘ. If the vehicle's drive system cannot be activated because the 12-volt vehicle battery is discharged, you can use the 12-volt vehicle battery in another vehicle to activate the vehicle's drive system.

For technical reasons, the jump-start connection points on electric vehicles are not suitable for being used to jump start other vehicles →ⓘ.

⚠ WARNING

Using the jump leads incorrectly or performing the jump start procedure incorrectly can cause the 12-volt vehicle battery to explode. This can result in serious injuries.

- Always read and observe the warnings and safety information before carrying out any kind of work on the 12-volt vehicle battery *(→ 12-volt vehicle battery)*.
- Never confuse the positive battery terminal with the negative battery terminal.
- Never perform jump starting on a vehicle with a frozen or thawed 12-volt vehicle battery.

⚠ WARNING

A highly explosive mixture of gases is given off when the 12-volt vehicle battery is jump started. The explosive gas can ignite due to sparks when carrying out jump starting. This can result in serious injuries.

- Always keep fire, sparks, naked flames and lit cigarettes away from the 12-volt vehicle battery.
- Avoid electrostatic discharge in the vicinity of the 12-volt vehicle battery.

NOTICE

Tow-starting the vehicle can cause considerable damage to the vehicle.

- Carry out jump starting to activate the vehicle's drive system.

NOTICE

The electrical system of an electric vehicle is not designed to provide another vehicle with jump starting assistance. This can cause serious damage to the electrical system of the electric vehicle.

- Never use an electric vehicle to provide jump starting assistance to another vehicle.

Preparing for jump starting

If the vehicle's drive system cannot be activated because the 12-volt vehicle battery is discharged, another vehicle can be used to jump start the vehicle.

NOTICE

A discharged 12-volt vehicle battery can already freeze at temperatures around 0°C (around +32°F) and can be damaged and fail.

- Always replace a 12-volt vehicle battery which is frozen or has been frozen.

Preparations

Observe the following when performing jump starting:

— Wear eye protection and protective gloves →⚠.

— Observe the jump lead manufacturer's operating instructions.

— Open the bonnet.

— When performing jump starting, always use jump leads with fully-insulated terminal clamps and defect-free insulation →⚠.

— Make sure that there is sufficient distance between the vehicle providing jump starting assistance and the vehicle receiving it. If the vehicles touch metallically, current can already flow when the positive terminals are connected →ⓘ.

— Ensure that the terminal clamps have good metal-to-metal contact with the terminals.

WARNING

Jump starting the vehicle incorrectly can cause the 12-volt vehicle battery to explode, which can lead to serious injuries.

- Always wear suitable eye protection and protective gloves.
- Never bend over the 12-volt vehicle battery.
- Always first connect the positive lead and then the negative lead.
- Never connect the negative lead to the brake lines.
- Make sure that there is no contact between the uninsulated parts of the terminal clamps.
- Make sure that the insulation of the leads is in perfect condition.
- Do not allow the lead attached to the positive battery terminal on the 12-volt vehicle battery to touch electrically conductive parts of the vehicle.

Jump leads

A suitable jump lead is needed in order to jump start another vehicle or have your vehicle jump started.

The cable cross-section of the jump leads must be at least 25 mm^2 (0,038 in^2).

Vehicle receiving jump starting assistance

1. Make sure that the discharged 12-volt vehicle battery is properly connected to the 12-volt vehicle electrical system.
2. If a 12-volt vehicle battery with a battery window is installed, check the colour of the window . If the battery window is light yellow or colourless, do not jump start the vehicle. Seek expert assistance.

Vehicle providing jump starting assistance

1. Observe the vehicle manufacturer's operating instructions.
2. Make sure that the vehicle battery providing assistance has the same voltage (12 volts) and approximately the same capacity as the flat 12-volt vehicle battery. Observe the information on the label of the vehicle battery in the vehicle providing jump starting assistance.

NOTICE

Please observe the following in order to avoid damage to the electrical system due to a short circuit:

- Always connect the jump leads as described.
- Avoid contact between the vehicles.

Attaching the jump leads

Jump-start connection point (positive)

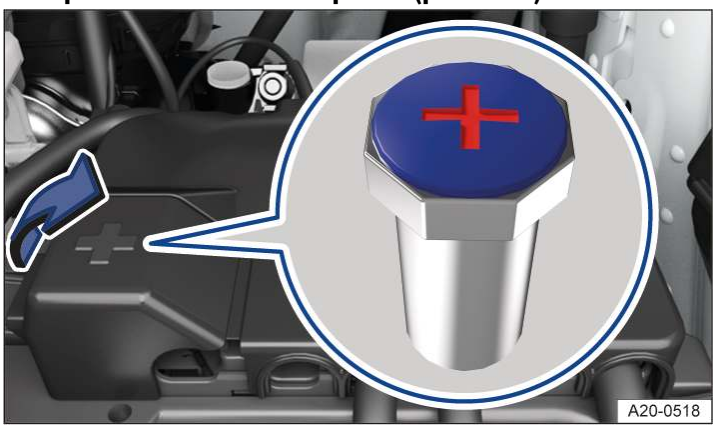

Fig. 1 In the bonnet space underneath a cover: positive jump-start connection point.

(+) The jump-start connection point (positive) for connecting the red jump lead.

Jump-start connection point (earth)

Fig. 2 In the bonnet space: jump-start connection point (earth).

(–) The earth jump-start connection point is used for connecting the black jump lead.

Connecting jump leads to the 12-volt vehicle battery

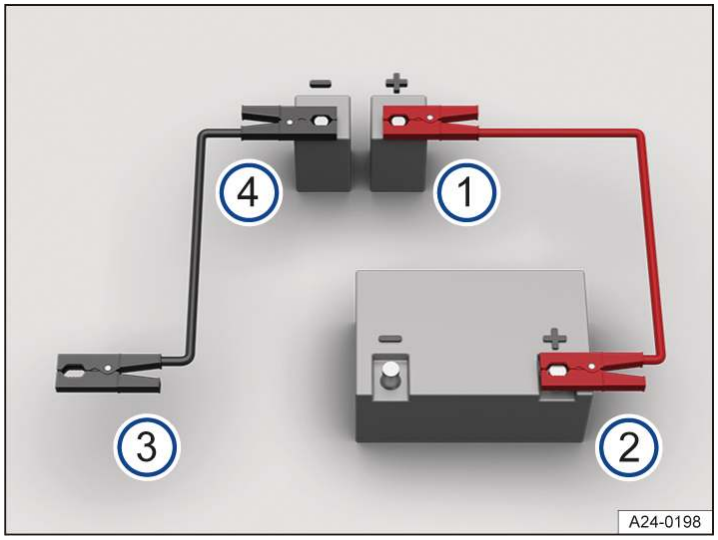

Fig. 3 Diagram showing how to connect jump leads in vehicles with a 12-volt vehicle battery.

(1) Jump-start connection point (positive) on the vehicle being jump-started .

(2) Positive battery terminal on the vehicle that is providing jump starting assistance.

(3) Suitable earth connection of the vehicle that is providing jump starting assistance. Preferably a jump-start connection point (earth), otherwise a solid metal part that is securely bolted onto the cylinder block, or the cylinder block itself.

(4) Jump-start connection point (earth) on the vehicle being jump-started .

It is not permitted to use an electric vehicle to jump start other vehicles, as this may cause considerable damage to the vehicle electrical system. The jump-start connection points are not suitable for being used to jump start other vehicles.

Connect the jump leads only in the order 1 – 2 – 3 – 4 → *Fig. 3*.

1. Switch off the ignition in both vehicles.
2. If present, fold open the cover on the positive jump-start connection point **+** in the bonnet space.
3. Connect one end of the red jump lead to the positive battery terminal **+** of the vehicle with the discharged 12-volt vehicle battery → *Fig. 3* (1).
4. Connect the other end of the red jump lead to the positive battery terminal **+** of the vehicle providing assistance → *Fig. 3* (2).
5. Connect one end of the black jump lead to an earth jump-start connection point **–** of the donor vehicle → *Fig. 3* (3).

   Or: if there is no earth jump-start connection point **–** available, connect it to a solid metal part that is firmly bolted to the cylinder block or to the cylinder block itself → *Fig. 3* (3).
6. Connect the other end of the black jump lead to the earth jump-start connection point **–** of the vehicle receiving the jump start → *Fig. 3* (4).
7. Position the leads in such a way that they cannot come into contact with any moving parts in the bonnet space.

Activating the vehicle's drive system

1. Start the engine of the vehicle that is providing jump starting assistance and let it run at idle.
2. Activate the drive system on the vehicle with the discharged 12-volt vehicle battery. If the vehicle's drive system cannot be activated, stop the starting procedure after about 10 seconds and try again after about 1 minute.

Please contact an expert if the vehicle's drive system still cannot be activated.

Removing the jump leads

1. Before disconnecting the jump leads, switch off the dipped beam headlights, if switched on.
2. Turn on the air conditioning blower and rear window heater in the vehicle with the discharged 12-volt vehicle battery. This helps minimise the voltage peaks generated when the leads are disconnected.
3. After jump starting, the jump leads should be removed only in the order 4 – 3 – 2 – 1 .
4. If present, close the cover of the positive terminal **+**.

After jump starting, have the 12-volt vehicle battery checked by a suitably qualified workshop. Volkswagen recommends using an authorised Volkswagen repairer.

Introduction to the topic

If a vehicle can no longer be moved under its own power, the vehicle can be transported with a breakdown truck or towed by another vehicle.

Make sure that both drivers are familiar with how to tow a vehicle. This applies in particular if no tow-bar is used.

Observe any legal requirements when towing.

NOTICE

Tow-starting the vehicle can cause considerable damage to the vehicle.

- Carry out jump starting to activate the vehicle's drive system.

NOTICE

When towing off paved roads, there is always a risk of overloading the fastening parts and causing considerable damage to the vehicles.

- Make sure that no excessive pulling forces occur and take care to avoid jerking movements when towing.

Useful information for vehicle recovery

Transport is where a vehicle that cannot be driven is transported by a breakdown truck.

WARNING

Vehicle components can be severely damaged by incorrectly secured tow-ropes or tow-bars. The risk of accident is increased and serious or fatal injuries may be caused.

- Attach the vehicle only at the points provided for transport and towing.
- Never attach the tow-rope or tow-bar to axle or running gear components.
- Seek expert assistance and have the vehicle transported standing on a breakdown truck if necessary.

NOTICE

Pushing the vehicle by hand can cause damage to the vehicle, e.g. deformation or detachment of add-on parts.

- When pushing the vehicle by hand, do not press on the tail light clusters, large panels and side or rear spoilers.

1. Inform the people involved, in particular the organisation office and the transport company, that your vehicle is electrically driven.

Transport with a breakdown truck

If the vehicle is to be transported, the vehicle may be transported only standing with all four wheels on a breakdown truck.

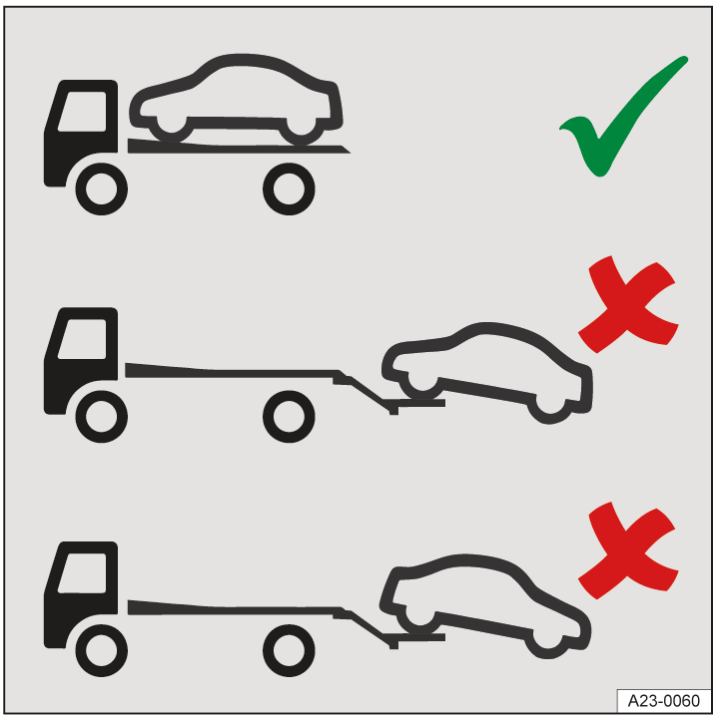

Fig. 1 Transport with a breakdown truck.

Information on the mounting points for transport at the front and rear *(→ Front towing eye)* .

If the vehicle is transported standing with all four wheels on a breakdown truck:

— switch off the interior monitoring system and anti-tow alarm *(→ Interior monitoring system and anti-tow alarm)*.

Towing the vehicle with another vehicle

Towing is where a vehicle that cannot be driven is pulled with the aid of another vehicle. The vehicle can be towed with a tow-bar or a tow-rope:

— The maximum permitted speed is 50 km/h (around 30 mph).

— The maximum permitted distance is 50 km (around 30 miles).

In which situations may the vehicle not be towed?

In case of a fault or damage, the vehicle must be transported standing with all four wheels on a breakdown truck if one of the following situations applies.

— The 12-volt vehicle battery is discharged.

— The power supply for the 12-volt vehicle electrical system cannot be guaranteed.

— The instrument cluster display does not work properly.

— The distance to be towed is further than 50 km (around 30 miles).

— Neutral (position **N**) cannot be selected.

— The roll-away protection cannot be deactivated .

— The steering column lock cannot be released.

— If the steering function or the operating clearance of the wheels cannot be ensured after an accident.

If a red warning lamp and the text message **Vehicle must not be towed. Consult owner's manual!** are displayed on the instrument cluster display or if the conditions for towing are not met, the vehicle must be towed or pushed rolling on its own four wheels only in emergency situations. The towing operation to the breakdown truck must take place only at walking pace and for a maximum distance of 100 metres.

WARNING

If the vehicle is towed even though the text message **Towing damages electrical system. Owner's manual!** is displayed in the instrument cluster, vibrations can occur in the drive system and the drive wheels can lock, particularly on icy or wet roads. Locked wheels can lead to a loss of control of the vehicle. This can result in accidents and serious or fatal injuries.

- If the message **Towing damages electrical system. Owner's manual!** appears in the instrument cluster, push or tow the vehicle only in emergency situations.

It is easier and safer to tow a vehicle with a tow-bar. Use a tow-rope only if you do not have a tow-bar. The tow-rope should be slightly elastic to reduce the strain on both vehicles. It is advisable to use a tow-rope made of synthetic fibre or similarly elastic material.

WARNING

If a vehicle is being towed, the vehicle handling and braking efficiency will change significantly. This can lead to a loss of control over the vehicle, accidents and serious or fatal injuries.

- Please note that greater force is needed for steering and braking during towing.

Attach the tow-rope or the tow-bar only to the points provided:

— Towing eye.

WARNING

Vehicle components can be severely damaged by incorrectly secured tow-ropes or tow-bars. The risk of accident is increased and serious or fatal injuries may be caused.

- Attach the vehicle only at the points provided for recovery and towing.
- Never attach the tow-rope or tow-bar to axle or running gear components.
- Seek expert assistance and have the vehicle transported standing on a breakdown truck if necessary.

Preparations

— Ensure that the tow-rope is not twisted. Otherwise a towing eye can become unscrewed during towing.

— Switch on the ignition and hazard warning lights on both vehicles. However, observe any regulations to the contrary.

— Observe the legal regulations and notes on towing in the owner's manual of the other vehicle.

Pulling vehicle (front)

The vehicle is not suited for towing other vehicles. It is not possible to fit a towing eye on the rear bumper.

Pulled vehicle (rear)

It is still possible to activate the turn signals in a vehicle that is being towed, even if the hazard warning lights are switched on. To do this, operate the turn signal and main beam lever in the required direction while the ignition is switched on. The hazard warning lights will not flash while the turn signal is being used. The hazard warning lights will start flashing again automatically as soon as the turn signal and main beam lever is moved back to the neutral position.

1. Make sure that the ignition is always switched on so that the steering wheel is not locked and you can operate the turn signals and wipers if necessary. The brake servo and power steering only work when the ignition is switched on. Otherwise you must press the brake pedal with significantly more force and also use more effort for steering.
2. Make sure that the vehicle key is always in the vehicle during towing *(→ Keyless Access)*.
3. Deactivate Front Assist.
4. Deactivate the roll-away protection .

   Or: the driver sits on the driver seat with seat belt fastened during the entire towing operation and the driver door is closed
5. Select position **N**.
6. Ensure that the tow-rope is always taut.

NOTICE

The wheels may lock if the electronic parking brake switches on during towing. This can result in serious damage to the vehicles.

- End towing immediately.
- Seek expert assistance and have the vehicle transported standing on a breakdown truck if necessary.

NOTICE

The electronic parking brake and steering column lock cannot be released if the charge level of the 12-volt vehicle battery is not sufficient. The vehicle can be damaged during towing.

- In the event of power failure or malfunctions, switch on the ignition or activate the vehicle's drive system, if necessary by jump starting, in order to release the electronic parking brake and steering column lock.
- Seek expert assistance and have the vehicle transported standing on a breakdown truck if necessary.

Front mounting point

Depending on the country and vehicle equipment, the mounting for the towing eye is located behind the cover in the bumper.

1. Before towing, check that the mounting with screw thread is available for the towing eye.
2. If this is not the case, seek expert assistance and have the vehicle transported on a breakdown truck if necessary.

The towing eye must always be kept in the vehicle →.

NOTICE

Use of a towing eye that is not suitable for the vehicle can damage the vehicle.

- Always use the towing eye from the supplied vehicle toolkit or another suitable towing eye for towing.

Fitting the towing eye at front

Fig. 1 In the front bumper on the right: removing the cover.

Fig. 2 In the front bumper on the right: screwing in the towing eye.

1. Remove the towing eye from the vehicle tool kit in the luggage compartment.
2. Press the marked area of the cover in the direction of the arrow to release the cover catch → *Fig. 1*.
3. Remove the cover, allow it to hang on the vehicle or place it in the vehicle if necessary →.
4. Screw the towing eye into the mounting in the direction of the arrow and tighten as far as possible → *Fig. 2* , →. Use a suitable object to screw the towing eye fully and securely into the mounting.
5. After you have finished towing, remove the towing eye by unscrewing it in the opposite direction to the arrow using a suitable object.
6. Insert the cap in the respective recess and press in until it engages.
7. Clean the towing eye if necessary and place it back in the vehicle toolkit in the luggage compartment.

WARNING

If the towing eye is not screwed fully and securely into the mounting, it may be wrenched out of the mount. This can result in accidents and severe injuries when towing.

- Before starting towing, check that the towing eye is fully screwed in.

NOTICE

Improper removal and fitting of the cover and towing eye can cause damage the vehicle's paint and body.

- Always remove and fit the cover and the towing eye carefully.

Safety notes for working in the bonnet space

The bonnet space of a vehicle is a hazardous area. You should only carry out work in the bonnet space if you know exactly how to perform the required tasks, are aware of the general safety procedures and have access to the correct equipment, service fluids and suitable tools. Failing to carry out work correctly can cause serious injuries →⚠. Have all work carried out by a suitably qualified workshop if necessary. Volkswagen recommends using an authorised Volkswagen repairer.

⚠ WARNING

The bonnet space is a hazardous area. Accidents and serious or fatal injuries can occur during all work in the bonnet space.

- Always be extremely careful and cautious during all work.
- Only perform any work in the bonnet space if you know exactly how to carry it out.
- Have the necessary work carried out by a suitably qualified workshop if you are unsure how to carry out work in the bonnet space. Volkswagen recommends using an authorised Volkswagen repairer.
- Switch on the electronic parking brake before working in the bonnet space.
- Switch off the ignition and keep the vehicle key in a safe place far enough away from the vehicle to prevent any risk of the vehicle's drive system being activated accidentally and supplying power to the electrical system.
- Never touch hot components of the electric drive.
- Always ensure you have not left any objects, such as cleaning cloths and tools, in the bonnet space.
- Always keep children away from the bonnet space and never leave children unsupervised.

⚠ WARNING

There are rotating parts in the bonnet space. When working in the bonnet space, especially during a starting process or when the vehicle is ready to drive, contact with rotating parts (e.g. rotor blades of the radiator fan) can cause serious or fatal injuries.

- Never touch the radiator fan or the radiator fan area even when the vehicle is ready to drive or the ignition is switched off. The fan is temperature-controlled and could start automatically.
- Before starting work, remove any jewellery and ties, tie up long hair and pull clothes in tightly.
- Always take due care and attention when depressing the accelerator. The vehicle could start moving even if the electronic parking brake is switched on.

⚠ WARNING

Escaping hot steam or hot coolant and hot vehicle parts can cause severe burns.

- Never open or close the bonnet if steam or coolant is escaping.
- Always wait until you can no longer see or hear steam or coolant coming from the bonnet space.

⚠ WARNING

The cooling system is under pressure when the electric drive is hot. If the cap is opened carelessly, coolant can spray out and cause severe burns or fatal injuries.

- Never open the cap of the coolant expansion tank when the electric drive is hot.
- If you have to open the cap of the coolant expansion tank, always protect your face, hands and arms from hot coolant or steam with a large, thick cloth.
- Turn the cap of the coolant expansion tank slowly and very carefully anticlockwise while exerting slight downwards pressure on the cap.

⚠ WARNING

Additional insulating materials, e.g. blankets in the bonnet space, or objects left in the bonnet space, e.g. cleaning cloths or tools, can cause malfunctions, damage to the electric drive and fire. This can result in serious or fatal injuries.

- Never cover the electric drive with blankets or other insulating materials.
- Never leave objects in the bonnet space.

Always park the vehicle on a horizontal and firm surface before carrying out any work in the bonnet space → ⚠ *(→ Parking)*.

⚠ WARNING

If the vehicle is not secured against rolling away during maintenance work, unintended vehicle movement may occur. This can result in accidents and severe or fatal injuries.

- Never work underneath a vehicle if it is not adequately secured against rolling away.
- Make sure that the vehicle is on a horizontal and firm surface and that the wheels are blocked when working under the vehicle while the wheels are touching the ground.
- In addition, support the vehicle securely with suitable trestles when working under the vehicle. The jack is not sufficient for this task and can fail.

Any work on the high-voltage system must only be carried out by suitably qualified workshops in accordance with Volkswagen guidelines → ⚠. After an accident, or after the underside of the vehicle has struck an obstacle, the high-voltage battery must be checked by appropriately qualified and trained experts.

⚠ DANGER

The components of the high-voltage system are under high electrical voltage. Contact with live components of the high-voltage system will result in burns, serious injuries or fatal electric shock.

- You should always assume that the high-voltage battery is fully charged and that all high-voltage components are live. This can also be the case when the ignition is switched off.
- Never touch high-voltage components or orange-coloured high-voltage cables. Damage to high-voltage components is not visible in all cases.
- Never remove the orange-coloured high-voltage cables and never damage or modify these cables.
- Never disconnect the high-voltage cables from the high-voltage network.
- Never open or modify the cover of the high-voltage battery and never remove this cover.
- Never carry out work with cutting, forming or sharp-edged tools or heat sources in the vicinity of high-voltage components and high-voltage cables. Any work on the high-voltage system must be carried out only by a suitably qualified workshop with corresponding approval for this work. Volkswagen recommends using an authorised Volkswagen repairer.
- Never carry out repair and maintenance work on orange-coloured high-voltage cables or high-voltage components.

⚠ DANGER

Damage to the vehicle or to the high-voltage battery or a fire in the battery cells can cause toxic gases or fluids to leak out. High-voltage components may be live in this case. There is a risk of serious injury, burns, or lethal electrical shock.

- Do not breathe in any gases that are emitted.
- Never touch any fluids that escape.
- Leave the vehicle quickly and with all vehicle occupants.
- Never remain in the direct vicinity of the vehicle.
- Observe all information on behaviour in the event of a fire risk *(→ High-voltage components)*.

⚠ WARNING

High voltage of the electrical system can cause electric shocks and burns. This can result in serious or fatal injuries.

- Never short circuit the electrical system. The 12-volt vehicle battery could explode.
- Never touch the high-voltage components, the high-voltage battery and particularly the orange-coloured high-voltage cables when the vehicle's drive system is activated.

Preparing the vehicle for working in the bonnet space

The following steps should always be carried out in the given order before working in the bonnet space:

1. Park the vehicle safely on a horizontal and firm surface *(→ Parking)*.
2. Secure the vehicle against rolling away.
3. Remove the vehicle key from the vehicle and keep in a location outside the vehicle so that the vehicle is not put into operation accidentally.
4. Allow the electric drive to cool sufficiently.
5. Always keep other persons away from the bonnet space.

Opening and closing the bonnet

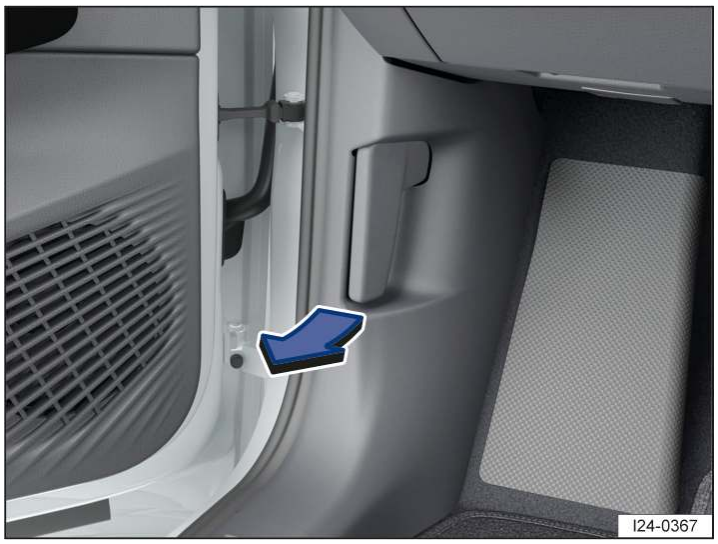

Fig. 1 In the footwell on the driver side: bonnet release lever (illustration).

Fig. 2 On the bonnet: control lever. (illustration)

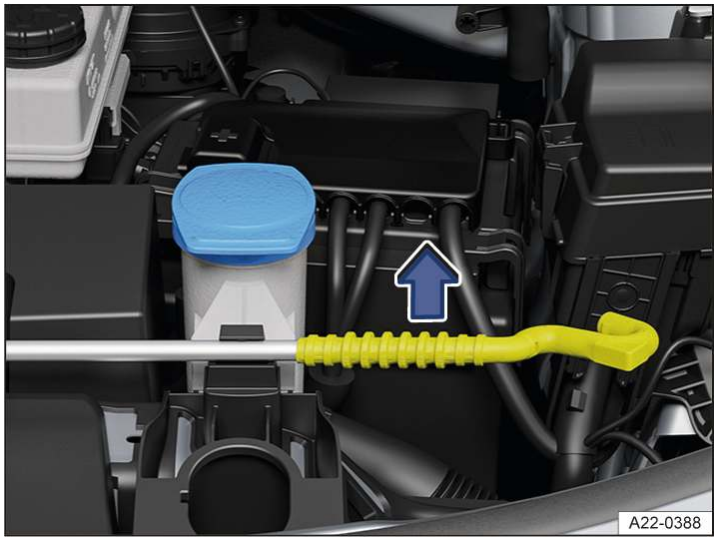

Fig. 3 In the bonnet space: bonnet stay in holder (illustration).

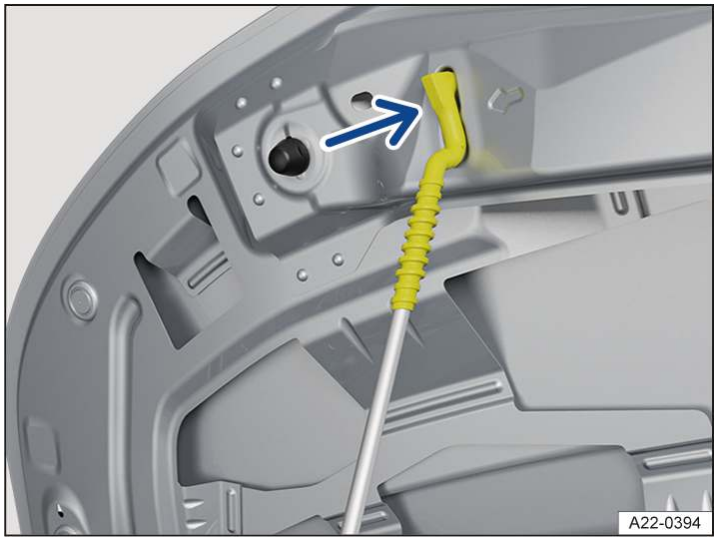

Fig. 4 On the bonnet: holder for bonnet stay (illustration).

Opening the bonnet

1. Open the driver door and pull the release lever in the direction of the arrow → *Fig. 1*.

   The bonnet is released from the lock carrier catch by spring force →.

2. To open the bonnet fully, lift the bonnet slightly while simultaneously pressing the opening lever in the direction of the arrow → *Fig. 2*.

3. Take the bonnet stay out of its holder → *Fig. 3* in the direction of the arrow and insert it into the retainer for the bonnet stay → *Fig. 4*.

Closing the bonnet

1. Lift the bonnet slightly and hold →.

2. Unhook the bonnet stay from the retainer for the bonnet stay → *Fig. 4* and push it into its holder → *Fig. 3*.

3. Let the bonnet drop into the catch of the lock carrier from a height of about 20 cm (about 8 inches) – do not press it down.

   The bonnet is flush with the body parts around it when it is closed properly →.

WARNING

If the bonnet is not closed properly, it can open suddenly while you are driving and completely obscure your view of the road. This can result in accidents and serious or fatal injuries.

- After closing bonnet, always check that the catch is properly engaged in the lock carrier.
- If you notice while driving that the bonnet is not closed properly, park the vehicle safely and close the bonnet.

WARNING

Careless opening and closing of the bonnet can lead to serious injuries.

- Open or close the bonnet only when there is no-one in its movement path.

NOTICE

Opening and closing the bonnet incorrectly can damage the bonnet or the wiper arms.

- Open the bonnet only when the wiper arms are flush to the windscreen and when they are switched off.
- Always fold the wiper arms back onto the windscreen before driving away.

Display for open bonnet

Fig. 5 On the instrument cluster display: the bonnet is open or not closed properly (illustration).

A symbol on the instrument cluster display indicates if the bonnet is open or is not closed properly → ⚠.

Do not drive on!

1. Stop the vehicle as soon as possible and when safe to do so.
2. If necessary, lift the bonnet and then close it again.

This symbol is also visible when the ignition is switched off and will go out a few seconds after the vehicle has been locked when all doors are closed.

⚠ WARNING

Failure to observe displayed warnings can lead to your vehicle breaking down in traffic and can cause accidents, serious injuries and even death.

- Never ignore warnings.
- Stop the vehicle as soon as possible and when safe to do so.
- Do not drive on and seek expert assistance if the warning lamp does not go out.

Service fluids and consumables

All service fluids and consumables, e.g. coolant and batteries, are being constantly further developed.

1. Have service fluids and consumables replaced by a suitably qualified workshop. Volkswagen recommends using an authorised Volkswagen repairer.

WARNING

When work is performed on the 12-volt vehicle electrical system, this can cause fires and serious or fatal injuries.

- Always disconnect the 12-volt vehicle battery.
- Always have a fully functional and tested fire extinguisher to hand.
- Ensure that the vehicle is unlocked when the 12-volt vehicle battery is disconnected as otherwise the anti-theft alarm will be activated.

WARNING

Service fluids can be toxic. Improper use and storage can cause serious or fatal injuries.

- Store service fluids only in the closed original container.
- Never store service fluids in empty food containers, bottles or any other non-original containers as people finding these containers could drink them.
- Keep children away from all service fluids and consumables.
- Always observe and follow the information and warnings on the service fluid packaging.
- When using products that give off harmful fumes, always work outdoors or in a well-ventilated area.

WARNING

Service fluids and some materials in the bonnet space are highly flammable and can ignite upon contact with hot surfaces, sparks and naked flames. This can lead to a fire and cause serious or fatal injuries.

- Never smoke in the vicinity of the bonnet space.
- Never work in the direct proximity of sparks or naked flames.
- Never work in the direct proximity of heating systems, water heaters or any other naked flames.
- Never spill service fluids onto the electric drive.
- Always have a fully functional and tested fire extinguisher to hand.

NOTICE

Use of service fluids that do not correspond to the specification can cause serious malfunctions and damage the electric drive.

- When refilling or replacing service fluids, ensure that the service fluids correspond to the respective specification.
- Fill service fluids only into the filler openings intended for them.

Any service fluids leaks from the vehicle are harmful to the environment.

- Regularly check the ground underneath the vehicle.
- If there are patches of oil or other fluids on the ground, the vehicle should be inspected by a suitably qualified workshop. Volkswagen recommends using an authorised Volkswagen repairer.
- Any spilt service fluids must be disposed of properly and with respect to environmental legislation.

Washer fluid

Basic information

The washer fluid reservoir is located in the bonnet space.

Fig. 1 In the bonnet space: washer fluid reservoir cap (illustration).

The washer fluid reservoir is identified by the symbol on the cap → *Fig. 1*.

1. The washer fluid level should be checked regularly and refilled as necessary.

Preparations

1. Prepare the vehicle for working in the bonnet space .
2. Open the bonnet.

Checking and refilling

1. Check whether there is enough washer fluid in the reservoir *(→ Washer fluid reservoir)*.
2. Use only clear water with a suitable alcohol-based windscreen washer fluid for refilling. Observe the mixture instructions on the packaging of the windscreen washer fluid →⚠, →ⓘ.
3. At low outside temperatures, add a special anti-freeze agent so that the fluid cannot freeze. Observe the mixture instructions on the packaging of the anti-freeze agent.

There is a strainer in the filler throat of the washer fluid reservoir. The strainer keeps large dirt particles away from the washer jets when refilling →ⓘ.

Do not use distilled water to refill the washer fluid reservoir. This is a prerequisite for enabling monitoring of the washer fluid level.

⚠ WARNING

Unsuitable additives in the washer fluid can leave an oily film on the vehicle windows. This can reduce visibility and increase the risk of accidents and can cause serious or fatal injuries.

- Never mix coolant additive or other unsuitable additives into the washer fluid.

NOTICE

Use of an acidic cleaning agent can lead to damage and to failure of the washer jets.

- Never fill an acidic cleaning agent, e.g. a vinegar-based cleaner, into the washer fluid reservoir.

NOTICE

Mixing different windscreen washer fluids can lead to flocculation of ingredients in the fluid and cause clogging of the washer jets.

- Use only suitable alcohol-based windscreen washer fluids.
- Never mix different windscreen washer fluids with each other.

NOTICE

When refilling windscreen washer fluid, dirt particles can enter the washer fluid reservoir if the strainer is damaged or not present. The washer jets could become clogged.

- Remove the strainer only for cleaning.
- Replace the strainer if it is damaged or missing.

Introduction to the topic

You should only carry out work on the cooling system if you know exactly how to perform the required tasks, are aware of the general safety procedures and have access to the correct equipment, service fluids and suitable tools. Failing to carry out work correctly can cause serious injuries →⚠. Have all work carried out by a suitably qualified workshop if necessary. Volkswagen recommends using an authorised Volkswagen repairer.

⚠ WARNING

Coolant is toxic. Contact with coolant, and especially ingestion of coolant, can cause serious or fatal injuries.

- Seek medical attention immediately after swallowing coolant.
- Seek medical attention if you have health problems after working with coolant.
- Always keep coolant out of the reach of children and only in the original sealed container.
- Never store coolant in empty food containers, bottles or any other non-original containers as people finding these containers may then drink the coolant.
- Avoid regular contact with coolant to avoid damaging the skin.
- Protect skin, face and especially eyes while working with coolant.
- Do not eat, drink or smoke when working with coolant.
- Wash your skin with soap and water after working with coolant.

⚠ WARNING

Coolant can freeze at extremely cold outside temperatures, causing the vehicle to break down. This can lead to the heating no longer working in the vehicle. Vehicle occupants with inadequate winter clothing could freeze to death.

- Make sure that the quantity of coolant additive is adjusted to the lowest expected ambient temperature at which the vehicle will be operated.
- Use only coolant additives that have been approved by the manufacturer.

Coolant and coolant additives can pollute the environment.

- Collect any service fluids that escape or are spilled and dispose of them in a proper and environmentally responsible manner.

Coolant specification

The cooling system is filled at the factory with a mixture of specially prepared water and at least 40% coolant additive G12evo (TL 744-L).

The proportion of coolant additive must always be at least 40% to protect the cooling system. If greater frost protection is required in very cold climates, the proportion of anti-freeze additive can be increased. However, the percentage of coolant additive should not exceed 55 %, as this would reduce the frost protection and the cooling effect.

The coolant additive is dyed a violet colour. The mixture of water and a coolant additive offers anti-freeze protection down to around -25°C (around -13°F), protects the alloy parts in the cooling system against corrosion, prevents limescale deposits and significantly increases the boiling point of the coolant.

When refilling the coolant, a mixture of distilled water and at least 40% of the coolant additive G12evo must be used in order to obtain the optimum corrosion protection →ⓘ.

NOTICE

The colour of the coolant results from mixing the violet coolant additive with distilled water. If the liquid in the coolant expansion tank is not violet but brown, for example, the suitable coolant has been mixed with another unsuitable coolant. This can result in serious malfunctions or damage to the drive and cooling system.

- Use only coolant additives that have been approved by the manufacturer.
- Have the coolant replaced immediately by a suitably qualified workshop if it has a brown colour. Volkswagen recommends using an authorised Volkswagen repairer.
- When adding coolant additives, never mix genuine coolant additives with other coolant additives that have not been approved by Volkswagen.

NOTICE

The coolant must always have the correct mixture ratio. If the mixing ratio is not correct, serious malfunctions or damage to the drive and cooling system may result.

- Have the correct mixing ratio checked by a suitably qualified workshop and restored if necessary if there is any doubt about the mixing ratio. Volkswagen recommends using an authorised Volkswagen repairer.

Checking coolant level and refilling coolant

Preparations

1. Park the vehicle safely on a horizontal and firm surface *(→ Parking)*.
2. Allow the electric drive to cool down →⚠.
3. Open the bonnet.

The coolant expansion tank can be recognised by the red symbol on the cap → *Fig. 1*.

Fig. 1 In the bonnet space: coolant expansion tank cap (illustration).

⚠ WARNING

Escaping hot steam or hot coolant and hot vehicle parts can cause severe burns.

- Never open the bonnet if steam or coolant is visibly or audibly emerging from the bonnet space.
- Always wait until you can no longer see or hear steam or coolant coming from the bonnet space.

⚠ WARNING

The cooling system is under pressure when the electric drive is hot. If the cap is opened carelessly, coolant can spray out and cause severe burns or fatal injuries.

- Never open the cap of the coolant expansion tank when the electric drive is hot.
- If you have to open the cap of the coolant expansion tank, always protect your face, hands and arms from hot coolant or steam with a large, thick cloth.
- Turn the cap of the coolant expansion tank slowly and very carefully anticlockwise while exerting slight downwards pressure on the cap.

Checking coolant level

Fig. 2 In the bonnet space: markings on the coolant expansion tank (illustration).

The coolant may be above the marked area upon delivery of new vehicles or after repairs to the cooling system. This is normal. The coolant does not have to be sucked off.

The coolant level cannot be checked accurately in all models as visibility of the fluid level in the coolant expansion tank may be obstructed. If the coolant level cannot be read exactly, contact a suitably qualified workshop. Volkswagen recommends using an authorised Volkswagen repairer.

1. Check the coolant level at the side markings of the coolant expansion tank when the coolant is cold → *Fig. 2*. The coolant level must be between the marks.
2. Have coolant added if the fluid level in the coolant expansion tank is below the minimum marking “min”. If the coolant is warm, the coolant level may be slightly above the upper mark.
3. Do not add coolant if there is no longer any coolant visible in the coolant expansion tank →ⓘ.

Topping up coolant

1. Unscrew the lid carefully →⚠.
2. Add only new coolant in accordance with the Volkswagen specification up to the upper level marking *(→ Coolant)*. After adding the coolant, the coolant level must be between the markings on the coolant expansion tank → *Fig. 2*.
3. Close the cap tightly.
4. Check the coolant level after one day. If the level of the coolant expansion tank drops below the “min” marking again, visit a suitably qualified workshop and have the cooling system checked. Volkswagen recommends using an authorised Volkswagen repairer.

If in an emergency you do not have access to coolant in the required specification, add only distilled water initially. Then have the correct mixture ratio with the coolant additive restored by a suitably qualified workshop as soon as possible. Volkswagen recommends using an authorised Volkswagen repairer →ⓘ.

NOTICE

Coolant expands when it is heated. If coolant is added so that the level is above the marked area, excess coolant could escape and damage the vehicle.

- Do not fill coolant above the top edge of the marked area on the coolant expansion tank.

NOTICE

Air may have entered the cooling system if there is no longer any coolant in the coolant expansion tank. This could cause damage to the electric drive.

- Do not drive on.
- Do not add coolant.
- Seek expert assistance.

NOTICE

Use of water other than distilled water can cause considerable corrosion damage in the electric drive or electric system due to the chemical substances contained in the water. This can lead to failure of the electric drive or electric system.

- Refill only with distilled water!
- If you have not used distilled water for refilling, the fluid in the cooling system should be completely replaced immediately by a suitably qualified workshop. Volkswagen recommends using an authorised Volkswagen repairer.

NOTICE

Use of the wrong service fluids can cause serious malfunctions and damage the electric drive.

- When adding or replacing service fluids, ensure that you pour the correct service fluids into the corresponding openings.

Troubleshooting

Coolant level

The warning lamp lights up red. A message is shown on the instrument cluster display.

Do not drive on! This can result in damage to the electric drive.

The coolant level is too low.

1. Stop the vehicle as soon as possible and when safe to do so *(→ Parking)*.
2. Deactivate the vehicle's drive system.
3. Allow the electric drive to cool down.
4. Check the coolant level *(→ Coolant)*.
5. Do not drive on if the warning lamp does not go out even though the coolant level is correct. Deactivate the vehicle's drive system immediately.
6. Do not drive on!

   Seek expert assistance.

together with Electric drive overheated

The warning lamp lights up red. A message is shown on the instrument cluster display.

Do not drive on!

1. Stop the vehicle immediately as soon as it possible and safe to do so *(→ Parking)*.
2. Deactivate the vehicle's drive system.
3. Seek expert assistance immediately.

Introduction to the topic

Brake fluid will gradually absorb water from the surrounding air over the course of time. The brake system will be damaged if there is too much water in the brake fluid. The boiling point of the brake fluid is also considerably reduced by the water content. Heavy use of the brakes may cause a vapour lock in the brake system if the water content is too high. Vapour locks reduce the braking efficiency, considerably increase braking distance and can even cause the brake system to fail completely. Your own safety and that of other road users depends on having a brake system that functions properly at all times.

WARNING

Brake fluid is toxic. Contact with brake fluid – particularly if swallowed – can lead to serious or fatal injuries.

- Consult a doctor immediately if you have swallowed brake fluid.
- Consult a doctor if you experience health problems after working with brake fluid.
- Always keep brake fluid out of the reach of children and only in the closed original container.
- Never store brake fluid in empty food containers, bottles or any other non-original containers as people finding these containers could drink the brake fluid in them.
- Avoid regular contact with brake fluid in order to prevent damage to the skin.
- Protect your skin, face and particularly your eyes when working with brake fluid.
- Do not eat, drink or smoke when working with brake fluid.
- Wash your skin with soap and water after working with brake fluid.

NOTICE

Brake fluid that has leaked or been spilled will attack vehicle surfaces. The vehicle paintwork, plastic parts and tyres could be damaged as a result.

- Wipe off brake fluid that has leaked or been spilled immediately from all parts of the vehicle.
- Then rinse all components with sufficient amounts of water.

Brake fluid can pollute the environment.

- Collect any service fluids that escape or are spilled and dispose of them in a proper and environmentally responsible manner.

Brake fluid specification

Volkswagen has developed a brake fluid that has been optimised for the brake system in the vehicle. To ensure the best possible operation of the brake system, Volkswagen expressly recommends the use of brake fluid compliant with VW standard 501 14.

Before using a particular brake fluid, check that the specifications printed on the container correspond to the vehicle requirements.

Brake fluid that is compliant with VW standard 501 14 is available from authorised Volkswagen repairers.

If this brake fluid is not available and it is necessary to use another high-quality brake fluid instead, brake fluid can be used that is compliant with DIN ISO 4925 or US standard FMVSS 116 DOT 4 with the additional designation CLASS 6.

Not all brake fluids that are compliant with DIN ISO 4925 or US standard FMVSS 116 DOT 4 with the additional designation CLASS 6 have the same chemical composition. Some of these brake fluids may contain chemicals that can damage or destroy brake system components over time.

Brake fluid that is compliant with VW standard 501 14 fulfils the requirements of DIN ISO 4925 or US standard FMVSS 116 DOT 4 with the additional designation CLASS 6.

Checking the brake fluid

Preparations

1. Park the vehicle safely on a horizontal and firm surface *(→ Parking)*.
2. Open the bonnet.

Checking the brake fluid level

Fig. 1 In the bonnet space: cap of the brake fluid reservoir.

The brake fluid reservoir can be recognised by its cap → *Fig. 1*.

The brake fluid level cannot be checked accurately in all models as a flap or engine components may partially conceal the brake fluid container.

— If the brake fluid level cannot be read exactly, please seek assistance from a suitably qualified workshop. Volkswagen recommends using an authorised Volkswagen repairer.

— If the brake fluid is not between the min. and max. markings of the brake fluid reservoir, seek assistance from a suitably qualified workshop → ⚠. Volkswagen recommends using an authorised Volkswagen repairer.

The brake fluid level drops slightly during vehicle operation as the brake pads wear and the brakes are automatically adjusted.

⚠ WARNING

An overly low brake fluid level or unsuitable brake fluid can cause brake failure or reduced braking efficiency. This can result in accidents and serious or fatal injuries.

- Have the brake system and brake fluid level checked regularly.
- Make sure that the correct brake fluid is used.
- Use only brake fluid that is explicitly compliant with VW standard 501 14.
- Use a high-quality brake fluid according to DIN ISO 4925 CLASS 6 or the US standard FMVSS 116 DOT 4 only in exceptional cases if a brake fluid according to VW standard 501 14 is not available.

Changing the brake fluid

Suitably qualified workshops can provide information on the intervals for changing the vehicle's brake fluid. Volkswagen recommends using an authorised Volkswagen repairer.

— The brake fluid should be changed regularly.

— Only brake fluid that conforms with the required specification should be used.

⚠ WARNING

Old brake fluid can form vapour bubbles due to absorbed moisture when the brakes are subjected to heavy use and reduce the braking effect to the point of total failure. This can result in accidents and serious or fatal injuries.

- Have the brake fluid changed regularly.
- Have the brake system filled only with new brake fluid.

Troubleshooting

Brake fluid level

The warning lamp lights up red. The brake fluid level is too low.

Do not drive on! This can result in brake failure.

1. Stop the vehicle immediately as soon as it possible and safe to do so *(→ Parking)*.
2. Check the brake fluid level.
3. Seek expert assistance if the brake fluid level is too low.

Introduction to the topic

The 12-volt vehicle battery is a component of the electrical system and in event of the high-voltage system failing, supplies the safety-relevant systems of the vehicle with energy. In the scope of maintenance work, the 12-volt vehicle battery is checked and where required, replaced.

You should only carry out work on the electrical system if you know exactly how to perform the required tasks, are aware of the general safety procedures and have access to the correct equipment, service fluids and suitable tools. Failing to carry out work correctly can cause serious injuries →⚠.

Information on warning and indicator lamps that light up can be found in the troubleshooting sections at the end of the chapter *(→ 12-volt vehicle battery)*.

Battery switch-off in an accident in which the airbag is triggered

In vehicles with a 12-volt vehicle battery in the vehicle interior or luggage compartment, the electrical connection to the 12-volt vehicle battery is automatically disconnected pyrotechnically in the event of an accident in which the airbags are triggered. This prevents a short circuit. You can find further information on the location of the vehicle battery in the section *(→ 12-volt vehicle battery)*.

Explanation of the warnings on the 12-volt vehicle battery

Always wear eye protection!

Electrolyte is very corrosive and caustic. Always wear protective gloves and eye protection!

No fire, sparks, naked lights or smoking!

A highly explosive mixture of gases is given off when the 12-volt vehicle battery is charging!

Always keep children away from electrolyte and the 12-volt vehicle battery!

Always observe the owner's manual!

⚠ WARNING

Any work on the 12-volt vehicle battery and the electrical system can cause serious chemical burns, fire or electric shocks. This can cause severe injuries.

- Always read and observe the warnings on the 12-volt vehicle battery.
- Switch off the ignition and all electrical consumers before carrying out any work on the 12-volt vehicle battery and also disconnect the negative cable from the 12-volt vehicle battery.
- Children should always be kept away from electrolyte and the 12-volt vehicle battery.
- When working with the 12-volt vehicle battery, ensure that your hands, arms and face in particular are protected from acid spillage.
- Always wear eye protection and protective gloves.
- Never short circuit battery terminals.
- All work should be carried out by a suitably qualified workshop. Volkswagen recommends using an authorised Volkswagen repairer.

⚠ WARNING

A highly explosive gas mixture is produced when working on the 12-volt vehicle battery. The explosive gas emitted from the 12-volt vehicle battery could be ignited by sparks. This can cause severe or fatal injuries.

- Always keep fire, sparks, naked flames and lit cigarettes away from the 12-volt vehicle battery.
- When handling cables and electrical equipment, avoid generating sparks and electrostatic discharge.

NOTICE

Ultraviolet radiation can damage the battery housing.

- Do not expose the 12-volt vehicle battery to direct sunlight for an extended period.

NOTICE

The 12-volt vehicle battery can freeze and be destroyed as a result.

- Protect the 12-volt vehicle battery against frost if the vehicle is left standing for extended periods.

System settings after battery replacement

System settings may have been changed or deleted if the 12-volt vehicle battery has been replaced or after jump starting.

1. Check the date and time and adjust if necessary.
2. Check the personal convenience settings and adjust and save if necessary.

12-volt vehicle batteries may contain toxic substances such as sulphuric acid and lead. Dispose of the 12-volt vehicle battery in a proper and environmentally responsible manner and only at a collection point for used batteries, e.g. a recycling centre or specialist company.

Electrolyte can pollute the environment. Collect any service fluids that escape or are spilled and dispose of them in a proper and environmentally responsible manner.

Checking the electrolyte level of the 12-volt vehicle battery

The 12-volt vehicle battery is maintenance-free.

The electrolyte level of the 12-volt vehicle battery should be checked regularly in high-mileage vehicles, in hot countries and in older 12-volt vehicle batteries.

Location of 12-volt vehicle battery

The 12-volt vehicle battery is located in the bonnet space.

Checking the electrolyte level

The main fuse box on the 12-volt vehicle battery has to be removed to check the electrolyte level of the 12-volt vehicle battery. An additional tool that is not included in the vehicle toolkit is required for this purpose.

1. Go to a suitably qualified workshop to have the 12-volt vehicle battery checked. Volkswagen recommends using an authorised Volkswagen repairer.

Charging, replacing, disconnecting and connecting the 12-volt vehicle battery

If you suspect that the 12-volt vehicle battery is damaged or faulty, go to a suitably qualified workshop and have the 12-volt vehicle battery checked. Volkswagen recommends using an authorised Volkswagen repairer.

Charging the 12-volt vehicle battery

The 12-volt vehicle battery is also charged when the vehicle is charged. If it is not possible to charge the 12-volt vehicle battery while charging the vehicle, the 12-volt vehicle battery should be charged by a suitably qualified workshop, as the technology of the factory-fitted 12-volt vehicle battery requires voltage-limited charging →⚠. Volkswagen recommends using an authorised Volkswagen repairer.

Replacing the 12-volt vehicle battery

The 12-volt vehicle battery has been developed to suit the conditions of its installation location and has special safety features. If a 12-volt vehicle battery has to be replaced, the replacement part must be installed by a workshop qualified to do this. For component information on size and the required maintenance, capacity and safety features, please contact a suitably qualified workshop, which must have the necessary technical documentation and equipment. Volkswagen recommends using an authorised Volkswagen repairer. The ventilation opening of the 12-volt vehicle battery must always be on the negative terminal side: the ventilation opening on the positive terminal side must always be sealed →⚠.

Only maintenance-free 12-volt vehicle batteries compliant with the standards TL 825 06 and VW 7 50 73 should be used. These standards must be dated October 2014 or later.

The 12-volt vehicle battery must always be replaced by a workshop qualified to do this, as the vehicle electronics must be adapted as part of the replacement process. In addition, the battery parameters for functional safety were determined only with the original equipment battery. Only suitably qualified workshops have the technology required to carry out this adjustment and also the correct replacement batteries. If a battery is used that does not comply with the specifications of Volkswagen AG or has insufficient battery capacity, this will render the type approval and thus the registration of the vehicle invalid →⚠.

⚠ WARNING

If the hose for the central gas venting system is not correctly secured on the 12-volt vehicle battery, the highly explosive gas mixture that is produced during vehicle operation can enter the vehicle interior. The explosive gas can ignite and cause serious or fatal injuries.

- Always make sure that the opening on the positive terminal side of the 12-volt vehicle battery is sealed.
- In vehicles with the 12-volt vehicle battery in the vehicle interior or luggage compartment, make sure that the hose for the central gas venting system is connected properly to the 12-volt vehicle battery. The vent line must always be attached on the negative terminal side of the 12-volt vehicle battery.

⚠ WARNING

Use of a 12-volt vehicle battery that does not have the same specifications and dimensions as the factory-fitted 12-volt vehicle battery can lead to short circuits or cause a fire. This can result in serious or fatal injuries.

- Always use a maintenance-free and leak-proof 12-volt vehicle battery that has the same specifications and dimensions as the factory-fitted 12-volt vehicle battery.

⚠ WARNING

Improper mounting of 12-volt vehicle batteries can lead to short circuits or cause a fire. This can result in serious or fatal injuries.

- Always secure the 12-volt vehicle battery at the mounting points provided in the vehicle.
- Fit all covers necessary for the vehicle on the battery again.

Disconnecting the 12-volt vehicle battery

Please note the following if the 12-volt vehicle battery has to be disconnected from the electrical system in the vehicle:

1. Switch all electrical consumers off.
2. Unlock the vehicle before disconnecting the battery in order to avoid triggering the anti-theft alarm.
3. First disconnect the negative cable and then the positive cable →⚠.

Connecting the 12-volt vehicle battery

Please observe the following if the 12-volt vehicle battery has to be connected to the electrical system in the vehicle:

1. Switch all electrical consumers off.
2. First reconnect the positive cable and then the negative cable → ⚠.

Various indicator lamps may light up after the 12-volt vehicle battery has been connected and the ignition is switched on. They will go out if you drive a short distance at a speed of around 15 km/h to 20 km/h (around 10 mph to 12 mph). If the indicator lamps stay lit, the vehicle should be checked by a suitably qualified workshop. Volkswagen recommends using an authorised Volkswagen repairer.

If the 12-volt vehicle battery was disconnected for an extended period, the system may not able to calculate or correctly display the time when the next service is due *(→ Service interval display)*. Observe the maximum permissible service intervals .

Perform the following actions if the ignition cannot be switched on after connecting the 12-volt vehicle battery:

1. Lock and unlock the vehicle from the outside.
2. Try to switch on the ignition again.
3. Please seek expert assistance if the ignition cannot be switched on.

⚠ CAUTION

Incorrectly connected cables can cause a short circuit. This can damage the vehicle electronics system and cause injuries.
- First connect the positive cable and then the negative cable.

Automatic switch-off for electrical consumers

After deactivation of the vehicle's drive system, the 12-volt vehicle battery may reach a low charge level if the vehicle is stationary for a long time, electrical consumers are used or the outside temperature is very low.

In order to maintain the starting capability of the vehicle, the intelligent onboard supply management system automatically performs various measures at a low charge level of the 12-volt vehicle battery.

— To ensure that the vehicle's drive system can still be activated, the power output of larger electrical consumers can be limited or, if necessary, switched off completely, and online functions are no longer available.

Discharge of 12-volt vehicle battery

It may not be possible to activate the vehicle's drive system if the battery is discharged. The 12-volt vehicle battery is discharged in the following situations:

— By long standing periods without activating the vehicle's drive system.

— If the ignition is switched on continuously.

— Through use of electrical consumers when the vehicle's drive system has been deactivated.

⚠ WARNING

A highly explosive mixture of gases is given off when the 12-volt vehicle battery is being charged. Sparks or naked flames can ignite the explosive gas mixture. This can result in serious burns.
- 12-volt vehicle batteries should only be charged in well-ventilated spaces.
- Keep sparks and naked flames away from the 12-volt vehicle battery.
- Avoid electrostatic charges.

⚠ CAUTION

Discharged 12-volt vehicle batteries can already freeze at temperatures of around 0°C (around +32°F). Acid can leak from a 12-volt vehicle battery that has frozen and then thawed again. This can cause injuries and damage to the vehicle in the long term.
- Never charge a 12-volt vehicle battery which is frozen or has been frozen.
- The 12-volt vehicle battery must be replaced if it has ever frozen.

NOTICE

If the 12-volt vehicle battery is disconnected or connected when the ignition is switched on or when the vehicle's drive system is activated, this can result in damage to the electrical system and electronic components and lead to electrical malfunctions.

- Never connect or disconnect the 12-volt vehicle battery if the ignition is switched on or the vehicle's drive system is activated.

NOTICE

If accessories that supply electric power are connected to the 12-volt socket to charge the 12-volt vehicle battery, this can damage the electrical system and the electronic components and lead to electrical malfunctions.

- Never connect equipment that supplies electric power, e.g. solar panels or a battery charger, to the 12-volt socket to charge the 12-volt vehicle battery.

Troubleshooting

12-volt power supply

The warning lamp lights up red.

Do not drive on! Possible failure of the electrical system.

A message is shown on the instrument cluster display.

1. Stop the vehicle immediately in a safe place.
2. Switch off any electrical consumers that are not required.
3. Deactivate the vehicle's drive system.
4. Seek expert assistance.

12-volt power supply

A message with information on the 12-volt power supply is shown on the instrument cluster display.

1. Seek expert assistance.

12-volt vehicle battery charge level

The indicator lamp lights up yellow.

A message with information on the charge level of the 12-volt vehicle battery is shown on the instrument cluster display.

1. Switch on the ignition so that the 12-volt vehicle battery can be recharged.

   Or: charge the 12-volt vehicle battery by charging the high-voltage battery.
2. Seek expert assistance if the message about the charge level of the 12-volt vehicle battery does not disappear after a few minutes in spite of the measures performed.

Introduction to the topic

Wheels are the most heavily loaded and most underestimated parts of a vehicle. Wheels consist of matched tyre and wheel rim combinations. Wheels are very important as the narrow tyre surfaces are the only contact between the vehicle and the road.

The wheels and tyres approved by Volkswagen have been carefully selected.

The service life of tyres is dependent on tyre pressure, driving style, handling and correct fitting.

Wheel rims, tyres and wheel bolts

Wheel rims, tyres and wheel bolts are matched to the vehicle type. If different wheel rims are fitted, the tyres approved for these rims and the wheel bolts with the correct length and correctly shaped bolt heads must be used. This ensures that the tyres do not rub on the wheel housings, the brakes can work properly and that the vehicle drives quietly and safely. For technical reasons, it is not generally possible to use the wheel rims from other vehicles. This can also apply to wheel rims of the same vehicle type. Always contact a suitably qualified workshop if you wish to change to other tyre and wheel rim combinations. Volkswagen recommends using an authorised Volkswagen repairer.

The correct wheel bolts must be used for all vehicle types; these bolts must always be tightened with the correct tightening torque *(→ Wheel bolts)*.

Declaration of conformity for wheels and tyres

Applies only in India: Tyres fitted in the vehicle meet the requirement of BIS and comply with the requirements under the Central Motor Vehicle Rules (CMVR), 1989.

WARNING

Incorrect handling of wheels can reduce vehicle safety and cause serious accidents and fatal injuries.

- Check the tyre pressure regularly when the tyres are cold and always maintain the specified pressure *(→ Tyre pressure)*. If the tyre pressure is too low, it is possible that the tyre temperature will increase to such an extent when driving that the tread peels off and the tyre bursts.
- Check the tyres and wheel rims regularly for damage and wear.
- Never exceed the top speed and load permitted for the fitted tyres.
- All four wheels must be fitted with radial tyres of the same type, size (rolling circumference) and the same tread pattern. Exceptions for wheel rotation apply if wheel and tyre sizes on the front and rear axles differ *(→ Wheels and tyres)*.
- If you notice unusual vibrations, or if the vehicle pulls to one side when driving, stop immediately and check the tyres and wheel rims for damage.
- Never loosen the bolts on wheel rims with bolted-on rim ring.
- Only carry out work on wheels yourself if you have the necessary knowledge and tools.

WARNING

New tyres or tyres which are old, worn down or damaged cannot provide full levels of vehicle control and braking efficiency.

This can cause serious accidents and fatal injuries.

- Run in new tyres as they will initially have reduced grip and braking efficiency. Therefore, drive with appropriate caution during the first 600 km (370 mi).
- Never drive with worn tyres or tyres that shows signs of damage such as holes, cuts, cracks or blisters. If you are unsure whether it is possible to continue driving safely, seek expert assistance.
- If you notice unusual vibrations, or if the vehicle pulls to one side when driving, stop immediately and check the tyres and wheel rims for damage.
- Do not use tyres or wheel rims if you do not know their history. Used tyres and wheel rims could be damaged, even if the damage is not visible.
- Use tyres that are more than six years old only if you have no alternative. In this case, drive slowly and with extra care at all times, even if the tyres have never been used.
- Have worn or damaged tyres replaced immediately by a suitably qualified workshop. Volkswagen recommends using an authorised Volkswagen repairer.

WARNING

If the tightening torque of the wheel bolts is too low, the wheel bolts and thus the wheel can become loose while the vehicle is in motion. The wheel bolts and the threads could be damaged if the tightening torque is too high.

Incorrectly tightened or missing wheel bolts can lead to loss of control over the vehicle, serious accidents and fatal injuries.

- Always tighten the wheel bolts with the correct tightening torque. If you do not have a torque wrench available, tighten the wheel bolts with the wheel wrench and have the torque checked immediately by the nearest suitably qualified workshop. Volkswagen recommends using an authorised Volkswagen repairer.
- Never drive if wheel bolts are missing or loose.
- Always use wheel bolts that match the wheel rims and the vehicle type.
- Never grease or oil the wheel bolt and the threads in the wheel hubs. This could cause the wheel bolts to loosen while the vehicle is in motion, even if the required torque setting is used.
- Make sure that the wheel bolts and threads of the wheel hubs are clean, smooth running and free of oil and grease.
- Never loosen the bolts on wheel rims with bolted-on rim ring.

WARNING

Improper mounting of the tyre on the rim can cause the rim to be damaged and the tyre to suddenly lose air or burst while driving.

This can cause serious accidents and fatal injuries.

- Have tyres fitted on the wheel rims only by a suitably qualified workshop. Volkswagen recommends using an authorised Volkswagen repairer.

Handling wheels

Avoiding damage to wheels

— Drive over kerbs and other low obstacles slowly and at right angles so that the two front wheels come into contact with the obstacle at the same time → ⚠.

— There is an increased risk of damage to the tyres and wheel rims on poor and unsurfaced roads and when driving offroad, particularly if the vehicle is fitted with low-profile tyres.

— Check the tyre pressure regularly.

— Inspect the tyres regularly for damage, e.g. holes, cuts, cracks or bulges.

— Have damaged or worn tyres replaced immediately by a suitably qualified workshop . Volkswagen recommends using an authorised Volkswagen repairer.

— Never exceed the maximum speed and load permitted for the tyres that are fitted *(→ Tyre lettering and tyre type)*.

— Protect the tyres from contact with aggressive substances, including grease, oil, petrol and brake fluid → ⚠.

— Replace missing dust caps on the valves immediately → ⚠.

— Remove foreign bodies that have not yet penetrated to the inside of the tyre .

— Observe all warnings of the Tyre Pressure Monitoring System *(→ Tyre Pressure Loss Indicator)* .

— Missing hubcaps can lead to damage to the wheel rims and wheel bolts.

Fit missing hubcaps before every journey.

— Check the wheel rims regularly for damage, e.g. cracks, dents or kinks → ⚠.

— Have damaged wheel rims replaced immediately by a suitably qualified workshop. Volkswagen recommends using an authorised Volkswagen repairer.

— Use only wheel rims that have been approved for the vehicle → ⚠.

⚠ WARNING

Corrosive liquids and other substances can cause visible and invisible damage to the tyres, which can cause the tyre to burst.
This can cause serious accidents and fatal injuries.

- Always keep chemicals, oils, lubricants, fuel, brake fluid and other corrosive substances away from the tyres.

Storing tyres

— Always store tyres in a cool, dry and preferably dark place.

— Do not store tyres mounted on the rim vertically.

— Any tyres not fitted on rims should be kept in suitable sleeves to protect against dirt and should be stored vertically (standing on the tread).

Tyres that are more than six years old

Tyres age through physical and chemical processes that can impair their function. Tyres that have been stored unused for an extended period of time age more quickly than tyres that are used all the time.

Volkswagen recommends replacing tyres that are more than six years old with new tyres. This also applies to tyres which appear to still be in good condition and whose tread depth has not yet reached the minimum value stipulated by legislation → ⚠.

Winter and all-season tyres also largely lose their effectiveness through ageing – regardless of the remaining tread depth.

The age of each tyre can be determined on the basis of the manufacturing date *(→ Tyre lettering and tyre type)*.

⚠ WARNING

Old tyres can suddenly lose air or burst, especially at high speeds.
This can cause serious accidents and fatal injuries.

- Use tyres that are more than six years old only if you have no alternative. In this case, drive slowly and with extra care at all times, even if the tyres have never been used.

New tyres

— Drive particularly carefully for the first 600 km (370 mi) with new tyres as the tyres have to be run in. Tyres that have not been run in have reduced grip and braking efficiency →⚠.

— All wheels must be fitted with radial tyres of the same type, size (rolling circumference) and the same tread.

— The tread depth of new tyres may vary between tyre models and manufacturers due to different design features and tread designs.

⚠ WARNING

New tyres will have to be run in as they will initially have reduced grip and braking effect.
This can lead to loss of vehicle control, serious accidents and fatal injuries.

- Run in new tyres. Drive with appropriate caution during the first 600 km (370 mi).

New tyre sizes may differ significantly from the actual dimensions and tyre dimensions for different tyre brands.

Replacing tyres

— The vehicle is fitted at the factory with Volkswagen Genuine reduced rolling resistance tyres. Volkswagen Genuine tyres are marked with the symbol ⊕. The specified energy consumption and the specified range can be achieved only with these tyres. Make sure that any new tyres purchased have optimised rolling resistance *(→ Driving economically)*.

— Seek advice from a suitably qualified workshop before purchasing new reduced rolling resistance tyres. Volkswagen recommends using an authorised Volkswagen repairer.

— Always replace tyres at least on an axle-by-axle basis.

— Old tyres should only be replaced by tyres that have been approved by Volkswagen for the vehicle type.

— Never use tyres with an effective size that is larger than Volkswagen-approved tyres →⚠.

⚠ WARNING

Wheels must have the necessary clearance. If there is no clearance, the tyres may come into frictional contact with parts of the running gear, bodywork and brake lines.
This can lead to failure of the braking system, detachment of the tread surface, tyre bursting and thus serious accidents and fatal injuries.

- Only use tyres whose dimensions are not larger than the dimensions of the tyre brands approved by Volkswagen and which do not rub against parts of the vehicle.

Re-synchronising the Tyre Pressure Loss Indicator

The Tyre Pressure Loss Indicator must be re-synchronised each time one or more wheels is changed. This also applies if the wheels have been swapped, e.g. from the front to the rear *(→ Tyre Pressure Loss Indicator)*.

Spare wheels

For technical reasons, your vehicle is not equipped with a spare wheel supplied from the factory. Before purchasing and using a spare wheel, always make sure that the spare wheel is approved for your vehicle. For information on the tyre and wheel rim sizes approved for your vehicle, refer to the registration documents or the EC Certificate of Conformity, or consult a suitably qualified workshop. Volkswagen recommends using an authorised Volkswagen repairer.

Wheel rims with bolted rim rings or trim elements

Rims with bolted-on rim rings or trim elements consist of several components. These components are joined together using special bolts. Have all work on wheel rims with bolted-on rim ring carried out by a suitably qualified workshop →⚠. Volkswagen recommends using an authorised Volkswagen repairer.

⚠ WARNING

Incorrect loosening and tightening of the bolts on wheel rims with bolted-on rim rings can cause serious accidents and fatal injuries.

- Never loosen the bolts on wheel rims with bolted-on rim ring.
- Have all work on wheel rims with bolted-on rings carried out by a suitably qualified workshop. Volkswagen recommends using an authorised Volkswagen repairer.

Wheel rim identification

In some countries, new wheel rims must contain information on certain properties. The following information may be provided on the wheel rim:

— Seal of conformity.

— Rim size.

— Name of manufacturer or brand name.

— Date manufactured (month/year).

— Country of origin.

— Production number.

— Raw materials batch number.

— Product code.

WARNING

Dirt can damage the valves and cause them to leak so that the tyre loses air.
If the tyre pressure is too low, it is possible that the tyre will heat up to such an extent when driving that this can result in tread separation and the tyre bursting, which can cause serious accidents and fatal injuries.

- Never drive without valve caps.

WARNING

The use of unsuitable or damaged wheel rims can impair vehicle safety and cause accidents and serious injury.

- Use only wheel rims that have been approved for the vehicle.
- Check the wheel rims regularly for damage, e.g. cracks, dents, kinks, and have damaged wheel rims replaced immediately by a suitably qualified workshop. Volkswagen recommends using an authorised Volkswagen repairer.

NOTICE

Driving over potholes and kerb edges can deform the wheels.
This can cause damage to the tyres and wheel rims.

- Avoid strong impacts and drive around obstacles if possible.

NOTICE

When swapping to other wheels, the valves can be damaged.

- Do not drop dismounted wheels on the rim.

Old tyres should be disposed of properly and as required by legislation.

If the spare wheel is not the same as the normal wheels fitted on the vehicle, the spare wheel must be used only for a short period of time in the event of a breakdown and appropriate care taken when driving. Replace the spare wheel with a normal wheel as soon as possible.

Volkswagen-approved tyres and wheel rims are guaranteed to have the dimensions that are suitable for the vehicle. In the case of other tyres or wheel rims, the tyre seller must provide a certificate from the tyre or wheel rim manufacturer stating that the tyre or wheel rim is also suitable for the vehicle. Store the certificate in a safe place and keep it in the vehicle.

Checking the tyre pressure

The wrong tyre pressure will have a negative effect on the vehicle's response and lead to high levels of wear or even a burst tyre → ⚠.
The correct tyre pressure is particularly important at high speeds.

— Check the tyre pressure at least once a month.

— Always check the tyre pressure when the tyres are cold. The specified tyre pressure applies to cold tyres. Tyre pressure is always higher in warm tyres than it is in cold tyres. For this reason, never reduce the pressure in warm tyres to adjust the tyre pressure.

— Always adjust the tyre pressure to the load level → *Fig. 2*.

— After adjusting the tyre pressures, always screw the caps onto the valves and observe the information on the Tyre Pressure Monitoring System.

— Always use the tyre pressure specified on the sticker. Never exceed the maximum tyre pressure which is given on the sidewall of the tyre

— If the tyre size of the mounted tyres differs from the specifications on the type plate or tyre pressure sticker, the correct tyre pressure must be determined.

Tyre pressure sticker on the vehicle

The sticker provides the correct tyre pressure for approved tyres and is located either on the driver door pillar → *Fig. 1* or inside the charging socket flap.

Fig. 1 On the driver door pillar: tyre pressure sticker (alternatively on the inside of the charging socket flap).

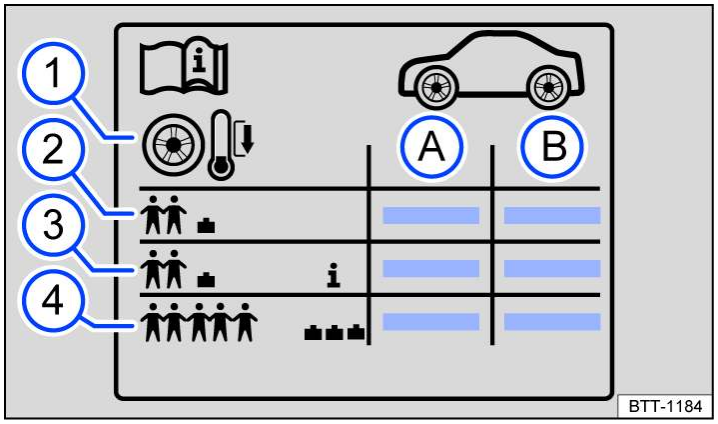

Fig. 2 Symbols on the tyre pressure sticker.

(A) Tyre pressure for the tyres on the front axle.

(B) Tyre pressure for the tyres on the rear axle.

(1) Note: check the tyre pressure when the tyres are cold.

(2) Tyre pressure for partial load.

(3) *Vehicle-dependent:* comfort tyre pressure for partial load.

(4) Tyre pressure for full load.

The appearance of the sticker may differ between vehicles. It may contain additional tyre sizes that are not approved for your specific vehicle. For information on the tyre sizes approved for your vehicle, refer to the vehicle registration certificate or the EC Certificate of Conformity, or ask an authorised Volkswagen repairer.

Comfort tyre pressure

Depending on the vehicle, the tyre pressure sticker may show details of a comfort tyre pressure → *Fig. 2*. The comfort tyre pressure allows increased driving comfort. Energy consumption may increase when driving with comfort tyre pressure.

WARNING

Underinflation can cause the tyre to suddenly lose pressure while the vehicle is motion, the tread to peel off or the tyre to burst. If the tyre pressure is too low, the tyres will wear prematurely and the car will not handle well.

Incorrect tyre pressure can cause serious accidents and fatal injuries.

- Check tyre pressures regularly, at least once a month, and before every long journey.
- Always adjust the tyre pressure to the corresponding load condition.
- Never reduce the increased tyre pressure of warm tyres.

WARNING

Excessive speeds and overloading of the vehicle can cause overheating, sudden tyre damage including tyre bursts and detachment of the tread.

This can cause serious accidents and fatal injuries.

- Never exceed the maximum load capacity of the fitted tyres *(→ Tyre lettering and tyre type)*.
- Never exceed the permitted maximum speed of the fitted tyres *(→ Tyre lettering and tyre type)*.

NOTICE

Careless handling of the tyre pressure gauge can damage the valve.

- When attaching the tyre pressure gauge, ensure that you do not position it at an angle to the valve stem.

Underinflated tyres can contribute to an increase in energy consumption.

Checking the tightening torque

The correct wheel bolts must be used for all vehicle types; these bolts must always be tightened with the correct tightening torque. The tightening torque of the wheel bolts must be checked regularly with a properly functioning torque wrench. In addition, the tightening torque must be checked immediately after every wheel change with a properly functioning torque wrench. If the tightening torque of the wheel bolts is too low, the wheel bolts and thus the wheel can become loose while the vehicle is in motion. The wheel bolts and the threads could be damaged if the tightening torque is too high.

If the wheel bolts are corroded and stiff, they must be renewed and the wheel hub threads cleaned before the tightening torque is checked. Never grease or oil the wheel bolts or the threads of the wheel hubs.

Tightening torque for wheel bolts

The tightening torque for wheel bolts is specified in the chapter Changing a wheel *(→ Wheels and tyres)*.

WARNING

If the tightening torque of the wheel bolts is too low, the wheel bolts and thus the wheel can become loose while the vehicle is in motion. The wheel bolts and the threads could be damaged if the tightening torque is too high.

Incorrectly tightened or missing wheel bolts can lead to loss of control over the vehicle, serious accidents and fatal injuries.

- Always tighten the wheel bolts with the correct tightening torque. If you do not have a torque wrench available, tighten the wheel bolts with the wheel wrench and have the torque checked immediately by the nearest suitably qualified workshop. Volkswagen recommends using a Volkswagen dealership.
- Never drive if wheel bolts are missing or loose.
- Always use wheel bolts that match the wheel rims and the vehicle type.
- Never grease or oil the wheel bolt and the threads in the wheel hubs. This could cause the wheel bolts to loosen while the vehicle is in motion, even if the required torque setting is used.
- Make sure that the wheel bolts and threads of the wheel hubs are clean, smooth running and free of oil and grease.
- Never loosen the bolts on wheel rims with bolted-on rim rings.

Rotating wheels

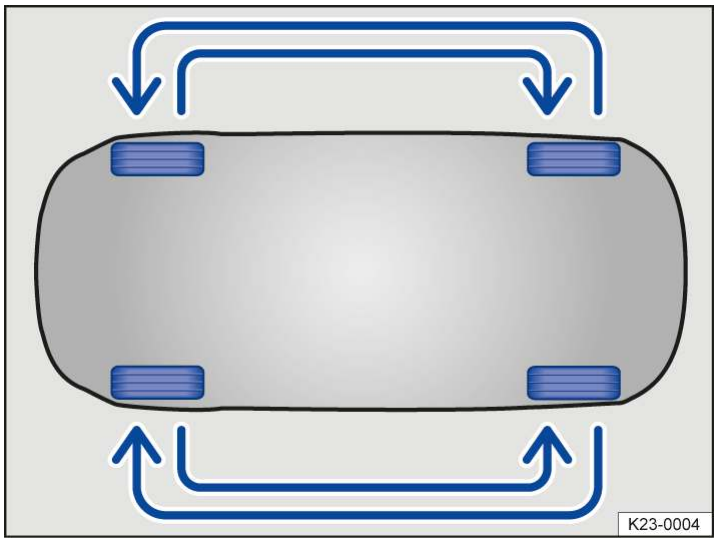

Fig. 1 Diagram showing how to swap wheels (illustration).

Regularly rotating the wheels as shown in the illustration → *Fig. 1* is recommended to help ensure that tyres wear evenly. All the tyres will then last for about the same time.

Volkswagen recommends having a wheel change carried out by a correspondingly qualified workshop. Volkswagen recommends using a Volkswagen dealership.

Checking the tread depth

Tread depth

Most driving situations require the highest possible tread depth. The tyres should have the same tread depth, at the minimum on each axle → ⚠. This is especially true in wet or wintry road conditions.

In most countries, the minimum tread depth required by law is 1.6 mm (1/16 in), measured in the tread grooves next to the tread wear indicators. Observe any deviating country-specific legal regulations.

Observe any country-specific legal requirements relating to the permissible minimum tread depths for winter and all-year tyres.

Tyre wear

The tyre wear is affected by several factors:

— Style of driving.

— How well the tyres are balanced.

— Adjustments made to the running gear.

Wheel imbalance may develop when the vehicle is driven; you will notice this by the nervous steering response. Unbalanced wheels will affect the level of tyre wear. In this case the wheels should be balanced again.

Incorrect wheel alignment causes excessive tyre wear, impairing the safety of the vehicle. The wheel alignment should be checked by a suitably qualified workshop if tyres show excessive wear. Volkswagen recommends using a Volkswagen dealership.

Tyre wear due to sporty driving

Fast cornering, heavy acceleration and hard braking all increase tyre wear.

If you drive with a sporty driving style, check the tread depth every 5,000 to 10,000 km (around 3,107 to 6,214 mi).

Tread wear indicators in tyres

Fig. 1 In the tread grooves: tread wear indicator.

There are 1.6 mm (1/16 in) high wear indicators → *Fig. 1* in the tread base of the tyres. Markings on the tyre sidewall indicate the position of the tread wear indicators → *Fig. 1*.

The tread wear indicators show if a tyre is worn down. The tyre must be replaced at the latest when the tread depth is just down to the tread wear indicator.

The tread wear indicators of all tread grooves must be checked when the tread depth is checked.

⚠ WARNING

Worn tyres are a safety risk and make it difficult to control the vehicle well. They also increase the braking distance and the risk of skidding.

Worn tyres have significantly reduced grip. On wet roads in particular, the vehicle will be more at risk of aquaplaning.

Worn tyres can lead to loss of control over the vehicle, serious accidents and fatal injuries.

- Replace the tyres with new tyres at the latest when the tyres are worn down to the tread wear indicators.

Winter tyres

Summer tyres have less grip on icy or snow-covered roads. Winter or all-season tyres improve the handling and braking characteristics in winter road conditions. Volkswagen recommends that winter tyres be fitted to the vehicle at temperatures below +7°C (+45°F) or in winter road conditions. This also applies to models with all-wheel drive.

Winter and all-season tyres lose their effectiveness when the tread is worn down to a depth of 4 mm (around 5/32 in).

The following applies when using winter tyres:

— Observe any country-specific legal requirements.

— Use winter tyres on all four wheels at the same time.

— Only use in winter road conditions.

— Only use the sizes of tyre that have been approved for the vehicle.

— Only use winter tyres that have the same belt type, size and the same tread pattern *(→ Wheels and tyres)*.

— Observe the maximum speed permitted by the speed rating.

Speed limitation

Winter tyres have a speed limit depending on the speed rating *(→ Tyre lettering and tyre type)*.

The type of tyre fitted on the vehicle can be selected and a speed warning set in the Infotainment system.

If you use V-rated winter tyres, the speed limits and required tyre pressure are determined by the engine size. You must ask a suitably qualified workshop about the maximum permitted speed and required tyre pressure. Volkswagen recommends using an authorised Volkswagen repairer.

Selecting the tyre type

1. Switch on the ignition.
2. Open the app overview in the Infotainment system.
3. Tap Vehicle.
4. Tap Vehicle (left).
5. Tap Tyres.
6. Select the **Tyre type** menu option.
7. Select tyre type.

Setting the speed warning

1. Switch on the ignition.
2. Open the app overview in the Infotainment system.
3. Tap Vehicle.
4. Tap Vehicle (left).
5. Tap Tyres.
6. In the **Warning at** menu option, use the slider to adjust the speed warning according to the speed rating of the fitted tyres.
7. In the **Speed warning** menu option, activate the speed warning using the slider.

WARNING

The improved vehicle handling as a result of winter tyres on wintry roads does not constitute a reason to take safety risks, as this may result in loss of vehicle control and serious injuries.

- Adapt your speed and driving style to the current visibility, weather and road or traffic conditions.

The vehicle handling is better if summer tyres are fitted at temperatures above +7°C (+45°F). The rolling noise is quieter, the tyre wear lower and the energy efficiency higher in this case.

In vehicles with a Tyre Pressure Loss Indicator, the system has to re-synchronise after changing to winter tyres *(→ Tyre Pressure Loss Indicator)*.

The speed limit and load capacity of winter tyres may differ from those of summer tyres.

Ask a suitably qualified workshop about the permitted winter tyre sizes. Volkswagen recommends using an authorised Volkswagen repairer.

Snow chains

Please observe legislation and also the maximum permitted speed when driving your vehicle with snow chains.

On icy or snow-covered roads, snow chains will improve traction and braking response.

Snow chains may be fitted only to the rear wheels. They may be fitted only to the following tyre and wheel rim combinations:

Capacity of high-voltage battery	Tyre size	Wheel rim
52 (55) kWh, 59 (63) kWh	215/55 R 18	7½ J x 18 ET50
52 (55) kWh, 59 (63) kWh	215/50 R 19	7½ J x 19 ET50
77 (82) kWh, 79 (84) kWh	215/45 R 20	8 J x 20 ET47

Use only snow chains with fine-pitch links that do not protrude by more than 9 mm (around 23/64 in), including the tensioner.

Volkswagen recommends that you ask a suitably qualified workshop for information about appropriate wheel, tyre and snow chain sizes. Volkswagen recommends using an authorised Volkswagen repairer.

Snow chains may only be used on tyre and wheel rim combinations that are approved for driving with snow chains.

Remove hubcaps and trim rings before fitting snow chains. For safety reasons, cover caps must then be fitted over the wheel bolts. Caps are available from a suitably qualified workshop. Volkswagen recommends using an authorised Volkswagen repairer.

Using snow chains with fitted temporary spare wheel or collapsible spare wheel

If the spare wheel differs from the tyre and wheel rim combinations approved for operation with snow chains, the use of snow chains on the spare wheel is not permissible for technical reasons. In this case, proceed as follows:

1. In the event of a flat tyre on one of the rear wheels, mount the spare wheel on the front axle.
2. Replace the damaged rear wheel with the removed front wheel. Observe the direction of rotation.

Volkswagen recommends fitting the snow chains before fitting the wheel.

WARNING

The use of snow chains that are unsuitable for your vehicle or the incorrect installation of snow chains can cause serious accidents and fatal injuries.

- Always use the correct snow chains.
- Use snow chains only on the tyre and wheel rim combinations approved by Volkswagen.
- Observe the fitting instructions of the snow chain manufacturer.
- When snow chains are fitted, never exceed the maximum speed specified by the snow chain manufacturer or the legally permitted maximum speed.

NOTICE

If snow chains are used on road sections where there is no snow, they will adversely affect the vehicle handling and damage the tyres and will also be quickly destroyed.

- Always remove the snow chains on road sections where there is no snow.

NOTICE

Snow chains that are in direct contact with the wheel rim can scratch or damage it.

- To avoid damage, use snow chains with integrated wheel rim protection.

In vehicles with a Tyre Pressure Loss Indicator, the system must be re-synchronised when snow chains are fitted *(→ Tyre Pressure Loss Indicator)*.

Troubleshooting

Damage to tyres and wheel rims is often hidden →⚠.

If you suspect that a wheel is damaged, slow down immediately and stop the vehicle as soon as it is safe to do so.

Pulling to one side or unusual vibrations

The vehicle pulls to the left or right when driving or there are unusual vibrations. This can be a sign of tyre damage or inadequate tyre pressure.

🛑 Check the tyres.

Slow down immediately and stop as soon as the traffic situation permits and it is safe to do so.

1. Check the tyres and wheel rims for damage.
2. Do not drive on if a tyre is damaged.
3. Changing a damaged wheel *(→ Changing a wheel)*. Seek expert assistance if necessary.

   Or: seal damaged wheel with the breakdown set and inflate *(→ Breakdown set)*.
4. If there is no visible damage, drive slowly and cautiously to the next suitably qualified workshop in order to have the vehicle checked. Volkswagen recommends using an authorised Volkswagen repairer.

Foreign body embedded in the tyre

A foreign body is embedded in the tyre or between the tread blocks.

Vehicles with mobility tyres: leave the foreign body in the tyre and go to a suitably qualified workshop. Volkswagen recommends using an authorised Volkswagen repairer. A sealant applied to the inside of the tyre tread encloses the foreign body and seals the tyre temporarily.

1. Leave the foreign body in the tyre if it has entered the inner tyre. Foreign bodies that are stuck between the tyre tread blocks can be removed.
2. Changing a damaged wheel *(→ Changing a wheel)*. Seek expert assistance if necessary.

   Or: seal damaged wheel with the breakdown set and inflate *(→ Breakdown set)*.
3. Check and adjust the tyre pressure.

   Go to a suitably qualified workshop. Volkswagen recommends using an authorised Volkswagen repairer.

Tyres lose grip

The vehicle suffers from loss of grip when cornering and breaks away. The braking distance is longer and the traction control system (TCS) and anti-lock brake system (ABS) intervene earlier.

The tyres may be worn so much that they can no longer guarantee sufficient grip *(→ Tread depth and tread wear indicators)*.

1. Drive slowly and cautiously to the next suitably qualified workshop in order to have the vehicle checked. Volkswagen recommends using an authorised Volkswagen repairer.

Wheel bolts are difficult to undo

The wheel bolts can corrode over the course of time. This makes it difficult to undo the wheel bolts.

1. Seek expert assistance or drive slowly and cautiously to the next suitably qualified workshop in order to have the vehicle checked. Volkswagen recommends using an authorised Volkswagen repairer.

WARNING

If you notice unusual vibration or the car pulling to one side while the vehicle is in motion, this may indicate that one of the tyres is damaged.

Tyre damage can lead to loss of control over the vehicle, serious accidents and fatal injuries.

- Slow down immediately and stop as soon as the traffic situation permits and it is safe to do so.
- Check the tyres and wheel rims for damage, e.g. holes, cuts, cracks and bulges.
- Never drive on if tyres or wheel rims are damaged. Seek expert assistance instead.
- If there is no visible damage, drive slowly and cautiously to the nearest suitably qualified workshop in order to have the vehicle checked. Volkswagen recommends using an authorised Volkswagen repairer.

Function of the Tyre Pressure Loss Indicator

The Tyre Pressure Loss Indicator warns the driver when the tyre pressures are too low.

The Tyre Pressure Loss Indicator is a Tyre Pressure Monitoring System and uses data from the ABS sensors and other functions to check the speed of rotation and the rolling circumference of the individual wheels when the vehicle is in motion.

If a tyre loses air or the tyre pressure is too low, the rolling circumference decreases and the speed of rotation increases.

The Tyre Pressure Loss Indicator shows a change in rolling circumference of the tyres with the (!) indicator lamp in the instrument cluster.

The following situations can also lead to a change in the speed of rotation:

— If the tyre pressure has been changed.

— If the tyre has structural damage.

— If the vehicle is loaded more heavily on one side.

— If snow chains have been fitted.

— If a spare wheel has been fitted.

— If one wheel per axle has been changed.

The Tyre Pressure Monitoring System (!) may react with a delay or not display anything at all in the event of a sporty driving style, when driving on snow-covered or icy roads or unpaved roads or when driving with snow chains.

The recommended tyre pressure for the tyre sizes approved by Volkswagen for the vehicle type can be found on the tyre pressure sticker on the driver's door pillar *(→ Tyre pressure)*.

The Tyre Pressure Loss Indicator does not work if there is a fault in the ESC or ABS *(→ Brake support systems)*.

Reference pressure

The reference pressure for the Tyre Pressure Monitoring System is the recommended tyre pressure for cold factory-fitted tyres. The reference pressure corresponds to the information on the tyre pressure sticker *(→ Tyre pressure)*.

If the tyre pressure of all four tyres has been adjusted correctly, the Tyre Pressure Loss Indicator must be re-synchronised *(→ Tyre Pressure Loss Indicator)*. This adjusts the reference pressure to the current tyre pressure.

The tyre pressure of all tyres including the spare wheel or temporary spare wheel must be checked monthly on a cold tyre and correspond to the vehicle manufacturer's specifications on the tyre pressure sticker. If the tyre size of the mounted tyres differs from the specifications on the type plate or tyre pressure sticker, the correct tyre pressure must be determined.

As an additional safety feature, the vehicle is equipped with a Tyre Pressure Monitoring System (TPMS) where an indicator lamp for low tyre pressure lights up if the pressure in one or more of the tyres is much too low. If the indicator lamp for low tyre pressure lights up, you should therefore stop the vehicle as quickly as possible, check the tyres, and inflate them to the correct pressure. Driving with a tyre pressure that is much too low will lead to the tyre overheating and can damage the tyre. A tyre pressure that is too low also reduces the fuel efficiency and service life of the tyre tread and can negatively affect the driving behaviour and braking capability of the vehicle.

The Tyre Pressure Monitoring System does not remove the need for regular maintenance and inspection of tyres. The driver is responsible for ensuring the correct tyre pressure is maintained at all times, even if the Tyre Pressure Monitoring System does not give any warning that the tyre pressure is too low.

The Tyre Pressure Monitoring System additionally has a fault indicator that issues a warning if the system is not functioning properly. This fault indicator is coupled with the indicator lamp for low tyre pressure. If the system detects a fault, the indicator lamp flashes for around 1 minute when the vehicle is started and then lights up continuously. This sequence is then repeated each time the vehicle is started as long as the fault is present.

If the Tyre Pressure Monitoring System indicates a malfunction, the tyre pressure cannot be monitored correctly. A malfunction of the Tyre Pressure Monitoring System can have various causes, e.g. due to replacement of a wheel or tyre. When a wheel or tyre has been replaced, check whether the (!) indicator lamp is indicating a system malfunction to ensure that the Tyre Pressure Monitoring System is functioning properly *(→ Tyre Pressure Loss Indicator)* .

WARNING

The Tyre Pressure Monitoring System is not a substitute for the full concentration of the driver and operates only within the limits of the system. The Tyre Pressure Monitoring System cannot detect all driving situations and may not react at all or may react with a delay or in an undesired way. If you do not pay due attention, there is a risk of accidents and serious or even fatal injuries.

- Always pay due attention, and do not rely exclusively on the Tyre Pressure Monitoring System. The driver is always responsible for ensuring that the tyre pressure is correct.
- Observe the system limits *(→ Tyre Pressure Loss Indicator)*.
- Check the tyre pressure regularly when the tyres are cold and always maintain the specified pressure corresponding to the tyre pressure sticker for the tyres fitted on the vehicle *(→ Tyre pressure)*.
- Check the tyres regularly for signs of wear or damage and replace worn or damaged tyres immediately.
- Never exceed the top speed and load permitted for the fitted tyres.

WARNING

If the vehicle is driven with a tyre pressure that is too low, the tyre could heat up to such an extent that the tread becomes detached and the tyre bursts. This could cause the driver to lose control of the vehicle.

If the tyre pressure is too low or too high, the tyres will wear prematurely and the vehicle will not handle well.

Different tyre pressures or tyre pressures that are too low can increase tyre wear, reduce vehicle stability, extend the braking distance and lead to tyre damage, tyre failure and loss of control over the vehicle.

This can result in serious accidents and fatal injuries.

- Always observe the warnings of the Tyre Pressure Monitoring System. If the (!) indicator lamp lights up, stop immediately in a place that is safe from traffic and check all tyres *(→ Tyre pressure)*.
- The driver is responsible for the correct tyre pressure. Check the tyre pressure regularly when the tyres are cold and always maintain the specified pressure corresponding to the tyre pressure sticker for the tyres fitted on the vehicle *(→ Tyre pressure)*. The Tyre Pressure Monitoring System cannot function correctly unless all cold tyres have the correct tyre pressure.
- If the tyre is not flat and it is not necessary to change the wheel immediately, drive at low speed to the nearest suitably qualified workshop and have the tyre pressure checked and corrected *(→ Tyre pressure)*. Volkswagen recommends using an authorised Volkswagen repairer.
- Always adapt the Tyre Pressure Loss Indicator correctly *(→ Tyre Pressure Loss Indicator)*.

WARNING

Excessive speeds and overloading of the vehicle can cause overheating, sudden tyre damage including tyre bursts and detachment of the tread.

This can cause serious accidents and fatal injuries.

- Never exceed the maximum load capacity of the fitted tyres *(→ Tyre lettering and tyre type)*.
- Never exceed the permitted maximum speed of the fitted tyres *(→ Tyre lettering and tyre type)*.

Underinflated tyres will increase energy consumption and tyre wear.

When new tyres are driven at high speeds for the first time, they can expand slightly and trigger a one-off tyre pressure warning.

Old tyres should be replaced only by tyres that have been approved by Volkswagen for the vehicle type.

Do not rely only on the Tyre Pressure Monitoring System. Check your tyres regularly to ensure that they are properly inflated and have no signs of damage, such as punctures, cuts, cracks, and blisters. Remove any objects that become embedded in the tyre tread but have not penetrated into the body of the tyre itself.

Limits of the Tyre Pressure Loss Indicator

Regular maintenance

The Tyre Pressure Loss Indicator does not remove the need for regular maintenance and inspection of tyres. The driver is responsible for ensuring the correct tyre pressure is maintained at all times, even if the Tyre Pressure Loss Indicator does not give any warning that the tyre pressure is too low.

The tyre pressure of all tyres must be checked monthly on the cold tyres and correspond to the vehicle manufacturer's specifications on the tyre pressure sticker.

The recommended tyre pressure for the tyre sizes approved by Volkswagen for the vehicle type can be found on the tyre pressure sticker *(→ Tyre pressure)*.

Malfunction not remedied

If the Tyre Pressure Loss Indicator shows a malfunction, tyre pressure cannot be monitored correctly. A malfunction of the Tyre Pressure Loss Indicator can have various causes, e.g. due to replacement of a wheel or tyre. When a wheel or tyre has been replaced, check whether the (!) indicator lamp is indicating a system malfunction to ensure that the Tyre Pressure Loss Indicator is functioning properly *(→ Tyre Pressure Loss Indicator)*.

Delayed display or no display

In the following situations, the Tyre Pressure Loss Indicator may not display anything or may react with a delay:

— Driving with snow chains.

— Driving on snow-covered or icy roads or unsurfaced roads.

— With sporty driving.

Adapting the Tyre Pressure Loss Indicator

The Tyre Pressure Loss Indicator must be adapted again under the following conditions:

— If the tyre pressures have been changed.

— If one or more wheels have been changed.

— If the wheels have been swapped round, e.g. from front to rear *(→ Wheels and tyres)*.

The Tyre Pressure Loss Indicator may only be adapted again if all the tyres have been filled at the correct tyre pressure when measured on a cold tyre. Before measuring the tyre pressure on a cold tyre, park the vehicle for 1 hour out of direct sunlight.

In the event of a low tyre pressure warning, you cannot calibrate the Tyre Pressure Loss Indicator until you have met one of the following two conditions:

— Switch the ignition off and then back on again.

— Wait for 60 seconds with the vehicle's drive system activated and the vehicle stationary.

1. Open the app overview in the Infotainment system.
2. Tap Vehicle.
3. Tap Status.
4. Tap Tyres.
5. Tap SET.
6. When all four tyre pressures correspond to the required values, tap OK.

   The indicator lamp flashes for around 6 seconds. An acoustic signal also sounds and a text message is displayed on the instrument cluster display.

   After an extended driving time of at least 20 minutes and driving at different speeds, the system will automatically learn the new values and monitor them.

If the indicator lamp flashes for around 6 seconds without the Tyre Pressure Loss Indicator having been newly adapted beforehand, go immediately to the nearest suitably qualified workshop. Volkswagen recommends using an authorised Volkswagen repairer.

WARNING

If the Tyre Pressure Loss Indicator is adapted when the tyre pressure is too high or too low, the Tyre Pressure Loss Indicator may issue incorrect warnings or not issue a warning even though the tyre pressure is dangerously low.
This can result in accidents and serious or even fatal injuries.

- Make sure that the tyre pressure of all tyres is correct before adapting the Tyre Pressure Loss Indicator.

Troubleshooting for Tyre Pressure Loss Indicator

Low tyre pressure

The indicator lamp lights up yellow.

There is a loss of pressure in one or more tyres or the tyre is structurally damaged.

1. Stop the vehicle immediately in a place that is safe from traffic.
2. Check the tyres for visible damage.
3. If the tyres are not visibly damaged, drive slowly to the nearest filling station and check the tyre pressures. Adjust the tyre pressures if necessary.
4. If a tyre is damaged, replace the damaged wheel . Seek expert assistance if necessary.

   Or: seal damaged wheel with the breakdown set and inflate .
5. Re-synchronise the Tyre Pressure Loss Indicator *(→ Tyre Pressure Loss Indicator)*.
6. If the fault persists, go to a suitably qualified workshop. Volkswagen recommends using an authorised Volkswagen repairer.

Fault in the Tyre Pressure Loss Indicator

The indicator lamp flashes for about 1 minute and then remains lit continuously yellow.

There is a system fault.

1. Stop the vehicle immediately in a place that is safe from traffic.
2. Switch the ignition off and then back on again.
3. Re-synchronise the Tyre Pressure Loss Indicator *(→ Tyre Pressure Loss Indicator)*.
4. If the fault persists, go to a suitably qualified workshop. Volkswagen recommends using an authorised Volkswagen repairer.

Driving on unpaved roads for long periods or a sporty driving style can temporarily deactivate the Tyre Pressure Loss Indicator. In the event of a malfunction, the indicator lamp will flash for about 1 minute and then light up continuously. However, the indicator lamp will go out when the road conditions or driving style change.

Introduction to the topic

You should carry out a wheel change yourself only when the vehicle is parked safely, you are familiar with the safety procedures and have access to the correct equipment. Some models are delivered from the factory without a jack or box spanner. If this is the case, have the wheel change carried out by a suitably qualified workshop. Volkswagen recommends using an authorised Volkswagen repairer.

If the vehicle is delivered from the factory with a jack, this must be used only if one wheel on the vehicle is damaged and has to be replaced. If both tyres on one side of the vehicle, both tyres on one axle, or all tyres are damaged, the factory-supplied jack must not be used. Instead, go to a suitably qualified workshop. Volkswagen recommends using an authorised Volkswagen repairer.

The following steps must be carried out in order to change a wheel:

1. Prepare vehicle for the wheel change *(→ Changing a wheel)*.
2. Remove wheel cover or wheel bolt caps *(→ Wheel cover)* *(→ Wheel bolt caps)*.
3. Loosen the wheel bolts *(→ Wheel bolts)*.
4. Jack up the vehicle *(→ Jack)*.
5. Remove the damaged wheel and fit the spare wheel *(→ Wheels and tyres)*.

⚠ WARNING

Changing a wheel at the side of the road can be dangerous.
If the vehicle and work area are not adequately secured, this can result in serious accidents and fatal injuries.

- Change the wheel yourself only if you are familiar with the necessary actions. Otherwise, seek assistance from a suitably qualified workshop. Volkswagen recommends using an authorised Volkswagen repairer.
- Stop the vehicle as soon as possible and when safe to do so.
- To reduce the risk of unintentional vehicle movement, park the vehicle properly at a safe distance from moving traffic *(→ Parking)*.
- Move all vehicle occupants and particularly children so that they are at a safe distance from the work area and away from moving traffic.
- To warn other road users, switch on the hazard warning lights and set up the warning triangle.
- Jack up the vehicle only on a flat and firm surface. Soft ground or surfaces at an incline under the vehicle jack may cause the vehicle to slip off the jack. If necessary, use a large, strong board or similar support for the jack.
- Use an anti-slip surface covering, such as a rubber mat, to prevent the jack from slipping on a slippery surface (e.g. a tiled floor).
- Always use suitable and undamaged tools to change the wheel.
- The wheel bolt tightening torque should be checked with a correctly functioning torque wrench immediately after changing a wheel.
- If your vehicle is equipped with a Tyre Pressure Loss Indicator, you must immediately adapt the system again after a wheel change *(→ Tyre Pressure Loss Indicator)*.

Preparing the vehicle

Checklist

The following actions must always be carried out in the given order in preparation for changing the wheel → ⚠:

1. Park the vehicle at a safe distance from moving traffic. Observe all the important information on parking *(→ Parking)*. The ground must be firm and level. Soft ground or surfaces at an incline under the vehicle jack may cause the vehicle to slip off the jack. If necessary, use a large, strong board or similar support for the jack.
2. Switch on the hazard warning lights *(→ Centre console)*.
3. Ensure that all occupants exit the vehicle and go to a safe place away from moving traffic, e.g. behind the safety barrier. Observe country-specific regulations on high-visibility waistcoats.
4. Place the warning triangle in position to draw the attention of other road users to your vehicle.
5. Adjust the steering wheel so that the wheels point straight forwards.
6. Chock the wheel diagonally opposite the wheel being worked on with a stone, collapsible chocks or another suitable object.
7. Remove any items of luggage from the luggage compartment.
8. Remove the vehicle toolkit from the luggage compartment.

⚠ WARNING

Ignoring any of the items on this important safety checklist can lead to accidents and severe injuries.

- Always observe the items on the checklist.
- Observe the generally valid safety precautions.

Removing and fitting wheel covers

Removing wheel covers

Fig. 1 Removing the wheel cover.

The wheel cover protects the wheel bolts and must be fitted again after changing the wheel.

1. Take the hook from the vehicle toolkit *(→ Vehicle toolkit)*.
2. Insert the puller into one of the holes in the wheel cover.
3. Use the puller to pull off the wheel cover in the direction of the arrow. If necessary, use a box spanner to do this → *Fig. 1*.

Fitting wheel covers

1. Check the correct position of the anti-theft wheel bolt *(→ Wheels and tyres)*.
2. Press the wheel cover onto the wheel rim so that the valve hole is located over the tyre valve. Please ensure the cover engages securely all the way round.

WARNING

Using unsuitable hubcaps, or fitting them incorrectly, can cause accidents and serious injuries.

Incorrectly fitted hubcaps can become loose while the vehicle is in motion and endanger other road users.

- Do not use damaged hubcaps.
- Check that the wheel cover has engaged securely around the entire circumference.

WARNING

Incorrectly fitted hubcaps can interrupt or reduce the air supply for cooling the brakes. This also applies if hubcaps are retrofitted. If the airflow is not sufficient, the braking distance could increase significantly.

This can cause serious accidents and fatal injuries.

- Check that the cutout for the tyre valve in the wheel cover is located in the correct position.
- Check that the wheel cover has engaged securely around the entire circumference.

NOTICE

The wheel cover may be bolted on and can be damaged if it is pulled off.

- Do not use force to pull off wheel covers that are bolted on.

Removing and fitting the wheel bolt caps

Removing the caps

Fig. 1 Removing the wheel bolt caps.

The caps protect the wheel bolts and should be fitted fully back in position after changing the wheel.

1. Take the hook from the vehicle toolkit *(→ Vehicle toolkit)*.
2. Insert the hook through the opening in the cap.
3. Use the hook to pull off the cap in the direction of the arrow → *Fig. 1*.

Fitting the caps

1. Press the caps onto the bolts as far as they will go.

The anti-theft wheel bolt has a separate cap. This cap only fits onto the anti-theft wheel bolt and not onto the conventional wheel bolts.

Loosening wheel bolts

Fig. 1 Loosening wheel bolts.

Use a suitable box spanner to loosen the wheel bolts.

Only loosen the wheel bolts by approximately one turn before raising the vehicle with the jack.

1. Fit the box spanner over the wheel bolt as far as it will go.
2. Hold the end of the box spanner and turn the wheel bolt one turn anticlockwise → ⚠.

If one of the wheel bolts is very tight, you may be able to loosen it by pushing down the end of the box spanner carefully with your foot. Hold on to the vehicle for support and ensure that you have a secure footing.

Loosening the anti-theft wheel bolt

1. Take the adapter for the anti-theft wheel bolt out of the vehicle toolkit.
2. Push the adapter onto the anti-theft wheel bolt as far as it will go.
3. Push the box spanner onto the adapter as far as it will go.
4. Hold the end of the box spanner and turn the wheel bolt one turn anticlockwise → ⚠.

If one of the wheel bolts is very tight, you may be able to loosen it by pushing down the end of the box spanner carefully with your foot. Hold on to the vehicle for support and ensure that you have a secure footing.

⚠ WARNING

If the wheel bolts are removed or undone by more than one turn before the vehicle is raised with the jack, the wheel can fall off and the vehicle could tip as a result.

This can cause serious injuries.

- Only loosen the wheel bolts by approximately one turn before raising the vehicle with the jack.
- Never place any part of your body, e.g. your arm, underneath the vehicle while you are loosening the wheel bolts.

Lifting the vehicle with the jack

Jacking points

Fig. 1 On the sill: markings for the jacking points.

The jack may be positioned only at the reinforcements on the underbody, which are located behind the markings on the body → *Fig. 1*. Always use the jacking point closest to the wheel that is being changed → ⚠.

Applying the jack

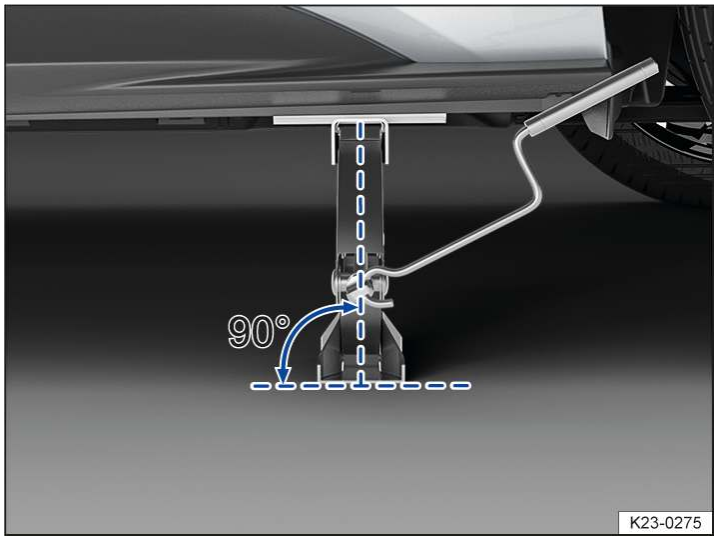

Fig. 2 Correct alignment of the jack.

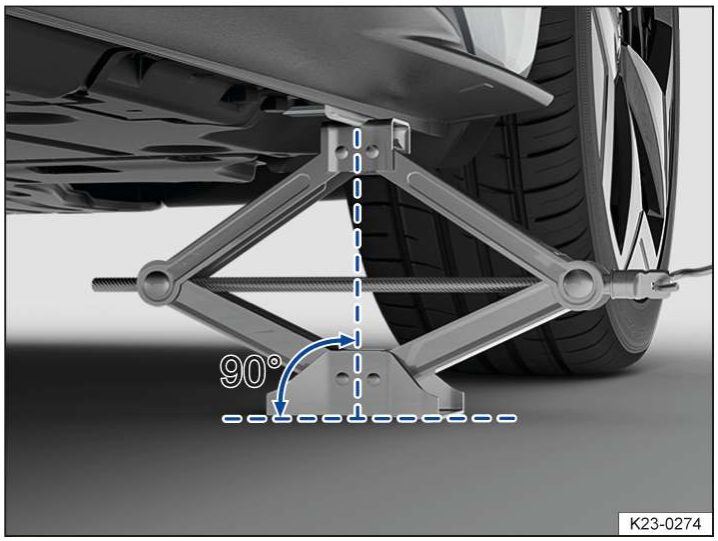

Fig. 3 At the rear left-hand side of the vehicle: jack applied.

Checklist

For your own safety, carry out the following points in the specified order → ⚠:

1. Insert the hand crank into the opening on the jack.
2. Find the jacking point under the vehicle → *Fig. 1* which is closest to the wheel that is being changed.
3. Crank up the jack until it just fits under the jacking point of the vehicle.
4. Make sure that the entire surface of the foot of the jack is resting securely on the ground and that the foot of the jack is positioned vertically directly beneath the jacking point → *Fig. 2* and → *Fig. 3*.
5. Position the jack and simultaneously continue to crank the claw up until it is in position around the jacking point underneath the vehicle → *Fig. 3*.
6. Crank the jack further until the wheel is just clear of the ground.

⚠ WARNING

Ignoring any of the items on this important safety checklist can lead to accidents and severe injuries.

- Always observe the items on the checklist.
- Observe the generally valid safety precautions.

⚠ WARNING

Incorrect use of the vehicle jack can cause the vehicle to slip off the jack, which can lead to serious or fatal injury.

- Never jack up the vehicle if more than one wheel is damaged.
- Never jack up the vehicle if the vehicle's drive system is activated.
- Never activate the vehicle's drive system when the vehicle is jacked up.
- Fit the jack only at the described jacking points. The jack claw must grip the vertical rib under the side member securely → *Fig. 3*.
- Never fit the vehicle jack on the high-voltage battery.
- Use only vehicle jacks that have been approved by Volkswagen for your vehicle. Other vehicle jacks could slip out of position – this includes vehicle jacks supplied with other Volkswagen models.
- Jack up the vehicle only on a flat and firm surface. Soft ground or surfaces at an incline under the vehicle jack may cause the vehicle to slip off the jack. If necessary, use a large, strong board or similar support for the jack.
- Use a non-slip base such as a rubber mat to prevent the jack from slipping on a smooth surface, such as a tiled floor.
- Never place any part of your body, e.g. your arm, underneath the vehicle if the latter is only supported by the jack. If you have to work underneath the vehicle, use suitable stands to provide extra support for the vehicle.

Changing a wheel

Removing the wheel

Fig. 1 Unscrew the wheel bolts with the wheel wrench.

1. Observe the checklist *(→ Changing a wheel)*.
2. Loosen the wheel bolts *(→ Wheel bolts)*.
3. Jack up the vehicle *(→ Jack)*.
4. Using the wheel wrench *→ Fig. 1*, completely unscrew loosened wheel bolts and place them on a clean surface.
5. Remove the wheel.

Two-piece wheel bolts

Two-piece wheel bolts must be used for the vehicle. With two-piece wheel bolts, the ball seat is loosely connected to the head.

Single-piece wheel bolts may not be used. If you are not sure which wheel bolts can be used for your vehicle, consult a suitably qualified workshop. Volkswagen recommends using an authorised Volkswagen repairer.

Fitting the spare wheel

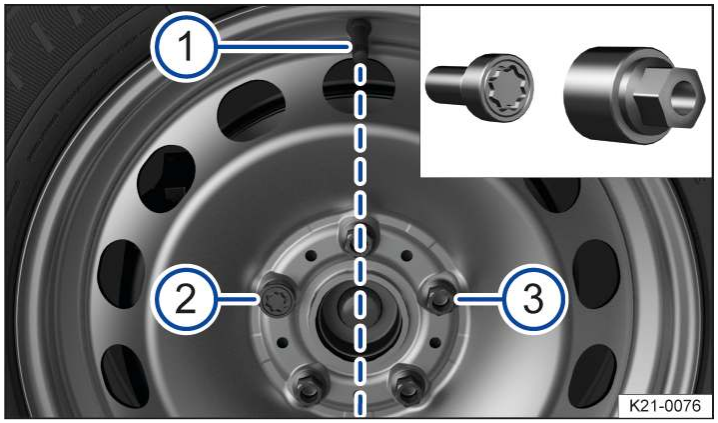

Fig. 2 Correct position of the anti-theft wheel bolt.

1. Note the tyre direction of rotation *(→ Tyre lettering and tyre type)*.
2. Put the wheel in place.
3. Use the adapter to screw the anti-theft wheel bolt clockwise to the correct position and tighten it slightly.

   On wheels with a wheel cover, the anti-theft wheel bolt must be screwed in at position → *Fig. 2* (2) or (3) according to the position of the tyre valve (1). The wheel cover can otherwise not be fitted.
4. Screw in wheel bolts in a clockwise direction, and tighten them slightly.
5. Lower the vehicle with the jack.
6. Use the box spanner to tighten every wheel bolt securely in a clockwise direction → ⚠. Do not tighten the bolts in clockwise or anticlockwise sequence. Tighten them in diagonal sequence.
7. Fit caps or hubcap *(→ Wheel cover)* *(→ Wheel bolt caps)*.

After changing a wheel

1. Clean the tools and place them back in the foam rubber holder in the luggage compartment.
2. Stow the changed wheel securely in the luggage compartment.
3. Have the tightening torque of the wheel bolts checked as soon as possible at the nearest qualified workshop. Volkswagen recommends using an authorised Volkswagen repairer.
4. Have the damaged tyre replaced as soon as possible.

Tightening torque for wheel bolts

Specified tightening torque for wheel bolts for steel or alloy wheel rims:

— 120 Nm (88 ft-lbs).

If the wheel bolts are corroded and stiff, they must be renewed and the wheel hub threads cleaned before the tightening torque is checked.

Never grease or oil the wheel bolts or the threads of the wheel hubs.

The tightening torque should be checked with a properly functioning torque wrench immediately after changing a wheel.

WARNING

If the tightening torque of the wheel bolts is too low, the wheel bolts and thus the wheel can become loose while the vehicle is in motion. The wheel bolts and the threads could be damaged if the tightening torque is too high.

Incorrectly tightened or missing wheel bolts can lead to loss of control over the vehicle, serious accidents and fatal injuries.

- Always tighten the wheel bolts with the correct tightening torque. If you do not have a torque wrench available, tighten the wheel bolts with the wheel wrench and have the torque checked immediately by the nearest suitably qualified workshop. Volkswagen recommends using an authorised Volkswagen repairer.
- Never drive if wheel bolts are missing or loose.
- Always use wheel bolts that match the wheel rims and the vehicle type.
- Never grease or oil the wheel bolt and the threads in the wheel hubs. This could cause them to loosen while the vehicle is in motion, even if the required torque setting is used.
- Make sure that the wheel bolts and threads of the wheel hubs are clean, smooth running and free of oil and grease.
- Never loosen the bolts on wheel rims with bolted-on rim ring.

WARNING

If the wrong wheel bolts are used, the wheel bolts can come loose while driving and lead to loss of control over the vehicle, serious accidents and fatal injuries.

- Always use wheel bolts that match the wheel rims and the vehicle type.
- Never use different wheel bolts.
- Use only two-piece wheel bolts on vehicles with two-piece wheel bolts.

After changing a wheel, the indicator lamp for the Tyre Pressure Monitoring System may indicate a fault in the system *(→ Tyre Pressure Loss Indicator)* .

Introduction to the topic

You can use the breakdown set to temporarily seal a tyre securely if the tread has been damaged by a foreign body or a puncture up to around 6 mm (around 15/64 in) in diameter. Do not remove foreign objects (e.g. screws) from the tyre!

Once the sealant has been added to the tyre, the tyre pressure must be checked and adjusted again after approximately 10 minutes of driving.

Seek expert assistance if more than one of the vehicle's tyres is damaged. The breakdown set is designed to fill only one tyre.

Use the breakdown set only when the vehicle has been safely parked and you know the work and safety precautions needed. Otherwise seek expert assistance.

The tyre sealant must not be used:

— If the wheel rim is damaged.

— If the outside temperature is below -30 °C (-22 °F).

— If there are cuts or punctures in the tyre that are larger than 6 mm (around 15/64 in).

— If the vehicle was driven with very low tyre pressure or a flat tyre.

— If the use-by date on the tyre filler bottle has expired.

— If a foreign object has been removed from the tyre.

— In connection with mobility tyres. The word "Seal" is visible on the outer wall of the tyre if your vehicle is fitted with mobility tyres.

WARNING

The use of breakdown sets at the edge of the road can be dangerous.
If the vehicle and work area are not adequately secured, this can result in serious accidents and fatal injuries.

- Only use the breakdown set if you are familiar with what is required. Otherwise, seek assistance from a suitably qualified workshop. Volkswagen recommends using an authorised Volkswagen repairer.
- Stop the vehicle as soon as possible and when safe to do so.
- Park the vehicle at a safe distance from moving traffic *(→ In an emergency)* *(→ Parking)*.
- Make sure that the surface the vehicle is parked on is level and firm.
- All passengers, and children in particular, must be at a safe distance and away from your area of work.
- To warn other road users, switch on the hazard warning lights and set up the warning triangle.
- When using the breakdown set, never lift the vehicle with a jack, even if the jack is approved for the vehicle.

WARNING

Tyres that have been filled with sealant will not handle in the same way as an undamaged tyre.
Excessive loads on the sealed tyre can cause serious accidents and fatal injuries.

- Never drive faster than 80 km/h (50 mph).
- Do not accelerate quickly, brake suddenly or drive at high speed through bends.
- Drive at a maximum of 80 km/h (50 mph) for no longer than 10 minutes before stopping to check the tyre.
- Tyres that have been sealed using the breakdown set should be replaced immediately. Tyres repaired with the breakdown set are intended for temporary, emergency use only. They should be used only until you can reach the nearest qualified workshop. Volkswagen recommends using an authorised Volkswagen repairer.

CAUTION

The sealant can be harmful if it comes into contact with the skin.

- It the sealant comes into contact with your skin, remove it from your skin immediately with a cloth or other suitable object.
- Keep the breakdown set out of the reach of children.

Dispose of used or out-of-date sealant in accordance with legal requirements.

You can purchase a new tyre filler bottle from a suitably qualified workshop. Volkswagen recommends using an authorised Volkswagen repairer.

Observe the separate operating instructions provided by the manufacturer of the breakdown set.

Preparing the vehicle

Checklist

Always carry out the following actions in the given order → ⚠:

1. Stop the vehicle at a safe distance away from moving traffic and on a flat and firm surface. Observe all the important information on parking *(→ Parking)*.
2. Switch on the hazard warning lights *(→ Centre console)*.
3. Ensure that all occupants exit the vehicle and go to a safe place away from moving traffic, e.g. behind the safety barrier. Observe country-specific regulations on high-visibility waistcoats.
4. Place the warning triangle in position to draw the attention of other road users to your vehicle.
5. Check whether the puncture can be repaired with the breakdown set *(→ Breakdown set)*.
6. Remove any items of luggage from the luggage compartment.
7. Take the breakdown set out of the luggage compartment.
8. Do not remove the foreign object, e.g. a screw, from the tyre.

⚠ WARNING

Ignoring any of the items on this important safety checklist can lead to accidents and severe injuries.

- Always observe the items on the checklist.
- Observe the generally valid safety precautions.

Sealing and inflating tyres

The breakdown set is located underneath the floor covering in the luggage compartment.

Sealing the tyre (variant 1)

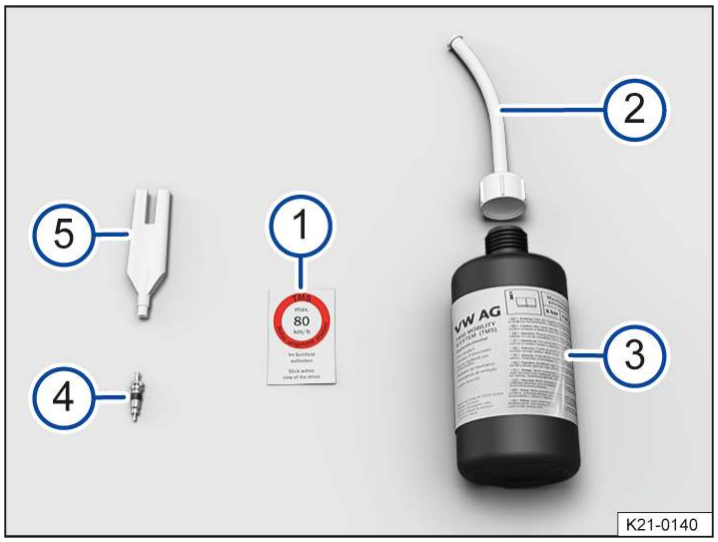

Fig. 1 Contents of the breakdown set (illustration).

1. Sticker with the maximum permitted speed “max. 80 km/h” or “max. 50 mph”.
2. Tyre sealant tube with plug.
3. Tyre filler bottle.
4. Spare valve core.
5. Valve core extractor.

There is a slot for the valve core on the lower end of the valve core extractor → *Fig. 1* (5). This is required for extracting the valve core from the tyre valve and then screwing it back into the valve again. This also applies to the spare valve core (4).

1. Take the sticker from the breakdown set → *Fig. 1* (1) and stick it on the dash panel within the driver’s field of vision.
2. Unscrew the cap from the tyre valve.
3. Use the valve core extractor → *Fig. 1* (5) to unscrew the valve core from the tyre valve. Place the core on a clean surface.
4. Shake the tyre filler bottle → *Fig. 1* (3) vigorously to and fro several times.
5. Screw the tyre sealant tube → *Fig. 1* (2) tightly onto the tyre filler bottle in a clockwise direction. The seal on the top of the bottle is pierced when doing so.
6. Remove the plug from the filler hose → *Fig. 1* (2) and place the open end fully on the tyre valve.
7. Hold the bottle upside down and fill the entire contents of the tyre filler bottle into the tyre.
8. Remove the empty tyre filler bottle from the valve.
9. Use the valve core extractor → *Fig. 1* (5) to screw the valve core back into the tyre valve.

Inflating the tyre (variant 1)

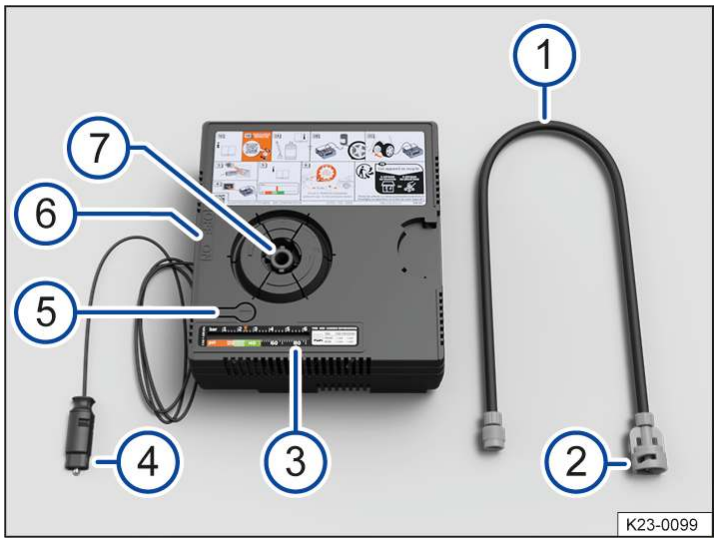

Fig. 2 Compressor in the breakdown set (illustration).

1. Tyre filler hose.
2. Wing nut.
3. Tyre pressure display.
4. 12-volt plug.
5. Air bleed button.
6. ON/OFF switch.
7. Mount for tyre filler hose.

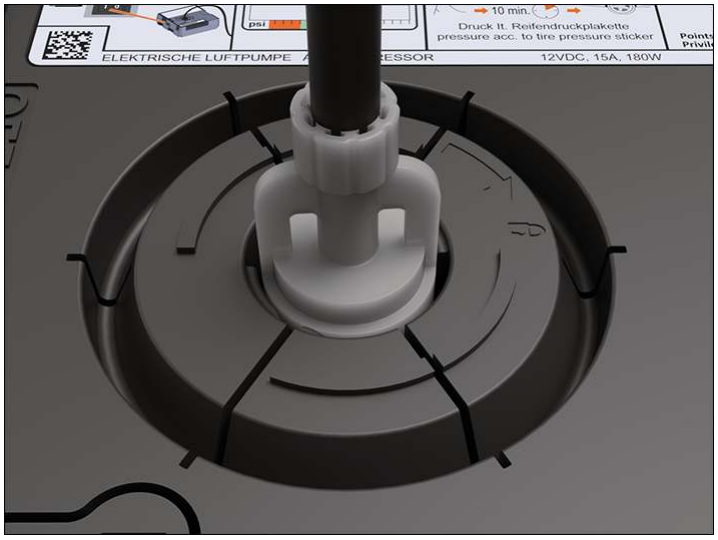

Fig. 3 Connecting the tyre filler hose.

The compressor from the breakdown set may be operated from the 12-volt socket, even if the power stated on the type plate of the compressor exceeds the maximum power rating of the socket.

1. Remove the tyre filler hose → *Fig. 2* (1) from the rear of the compressor.
2. Insert the tyre filler hose → *Fig. 2* (1) with the wing nut (2) into the mount for the tyre filler hose (7) so that the wing nut is pointing to 🔓 → *Fig. 3*.
3. Turn the wing nut → *Fig. 2* (2) in clockwise direction until the wing nut is pointing to 🔒 → *Fig. 3*.
4. Screw the tyre filler hose → *Fig. 2* (1) of the compressor tightly onto the tyre valve.
5. Activate the vehicle's drive system.

6. Insert the 12-volt plug → *Fig. 2* (4) into one of the vehicle's 12-volt sockets *(→ Sockets)*.
7. Switch on the compressor with the ON/OFF switch → *Fig. 2* (6).
8. Run the compressor until the tyre pressure has reached 2.0 – 2.5 bar (29 – 36 psi/200 – 250 kPa). **Maximum running time: 10 minutes**
9. Switch off the compressor.

If a tyre pressure of 2.0 – 2.5 bar (29 – 36 psi / 200 – 250 kPa) cannot be achieved:

1. Unscrew the tyre filler hose from the tyre valve.
2. Drive (or reverse) the vehicle approximately 10 metres (approximately 33 ft) so that the sealing compound is evenly distributed in the tyre.
3. Screw the compressor's tyre filler hose firmly back onto the tyre valve and inflate the tyre again.
4. If the required pressure still cannot be reached, the tyre is too badly damaged. The tyre cannot be sealed with the breakdown set. Do not drive on → ⚠. Seek expert assistance.

Sealing and inflating tyres (variant 2)

Fig. 4 Tyre filler bottle.

1. Valve of the tyre filler bottle.
2. Tyre filler hose of the tyre filler bottle.

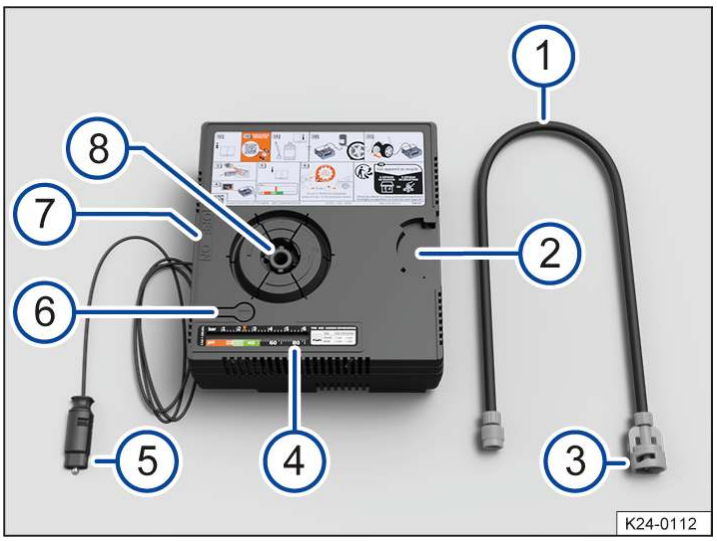

Fig. 5 Compressor in the breakdown set (illustration).

1. Tyre filler hose.
2. Notch for tyre filler bottle.
3. Wing nut.
4. Tyre pressure display.
5. 12-volt plug.
6. Air bleed button.
7. ON/OFF switch.
8. Mount for tyre filler hose.

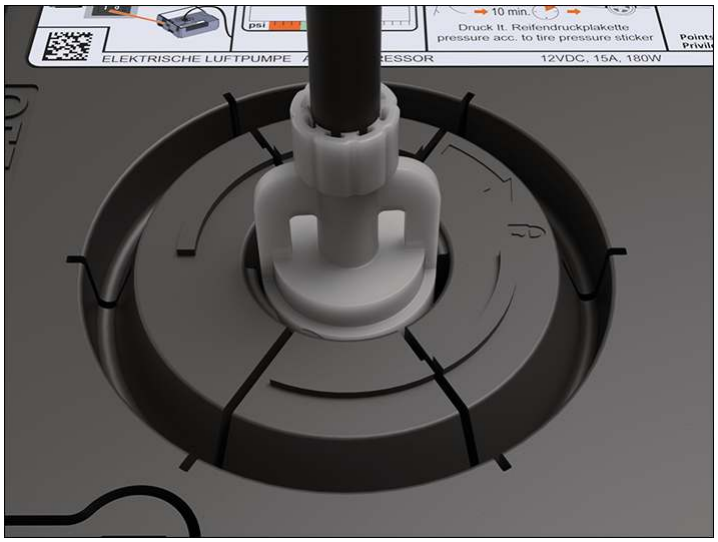

Fig. 6 Connecting the tyre filler hose.

The compressor from the breakdown set may be operated from the 12-volt socket, even if the power stated on the type plate of the compressor exceeds the maximum power rating of the socket.

1. Remove the sticker with the maximum permitted speed “max. 80 km/h” or “max. 50 mph” from the underside of the tyre filler bottle → *Fig. 4* and affix it to the dash panel in the driver’s field of vision.
2. Unscrew the cap from the tyre valve.
3. Shake the tyre filler bottle → *Fig. 4* vigorously to and fro several times.
4. Remove the tyre filler hose → *Fig. 5* (1) from the rear of the compressor.
5. Insert the tyre filler hose → *Fig. 5* (1) with the wing nut → *Fig. 5* (3) into the mount for the tyre filler hose → *Fig. 5* (8) so that the wing nut is pointing to 🔓 → *Fig. 6*.
6. Turn the wing nut → *Fig. 5* (3) in clockwise direction until the wing nut is pointing to 🔒 → *Fig. 6*.
7. Screw the tyre filler hose → *Fig. 5* (1) of the compressor tightly onto the valve of the tyre filler bottle → *Fig. 4* (1).
8. Screw the tyre filler hose of the tyre filler bottle → *Fig. 4* (2) tightly onto the tyre valve.
9. Hold the bottle upside down and press the top of the tyre filler bottle into the notch in the compressor → *Fig. 5* (2).
10. Place the compressor → *Fig. 5* together with the tyre filler bottle → *Fig. 4* on a level surface.
11. Activate the vehicle’s drive system.
12. Insert the 12-volt plug → *Fig. 5* (5) into one of the vehicle’s 12-volt sockets *(→ Sockets)*.
13. Switch on the compressor with the ON/OFF switch → *Fig. 5* (7).
14. Run the compressor until the tyre pressure has reached 2.0 – 2.5 bar (29 – 36 psi/200 – 250 kPa). **Maximum running time: 10 minutes**.
15. Switch off the compressor.

If a tyre pressure of 2.0–2.5 bar (29– 36 psi / 200–250 kPa) cannot be achieved

1. Unscrew the tyre filler hose of the tyre filler bottle from the tyre valve.
2. Drive (or reverse) the vehicle around 10 m (around 33 ft) so that the sealing compound is evenly distributed in the tyre.
3. Screw the compressor’s tyre filler hose directly onto the tyre valve and inflate the tyre again.
4. If the required pressure still cannot be reached, the tyre is too badly damaged. The tyre cannot be sealed with the breakdown set. Do not drive on → ⚠. Seek expert assistance.

Continuing your journey

1. Disconnect the compressor and unscrew the tyre filler hose from the tyre valve.

2. Immediately drive on at a speed of no more than 80 km/h (50 mph) once a tyre pressure of 2.0 – 2.5 bar (29 – 36 psi/200 – 250 kPa) has been reached.
3. Check the tyre pressure after driving for 10 minutes.

Check after driving for 10 minutes

1. Park the vehicle on a firm and level surface at the next safe opportunity, e.g. a car park.
2. Reconnect the tyre filler hose → *Fig. 2* (1) or → *Fig. 5* (1) and read off the tyre pressure on the tyre pressure display → *Fig. 2* (3) or → *Fig. 5* (4).

1.3 bar (19 psi/130 kPa) and lower:

1. **Do not drive on!** The tyre cannot be sealed adequately with the breakdown set → ⚠. Seek expert assistance.

1.4 bar (20 psi/140 kPa) and higher:

1. Adjust the tyre pressure back to the correct value.
2. Drive carefully to the nearest suitably qualified workshop. Do not exceed a maximum speed of 80 km/h (50 mph). Volkswagen recommends using an authorised Volkswagen repairer.
3. Have the damaged tyres replaced by a suitably qualified workshop. Volkswagen recommends using an authorised Volkswagen repairer.

⚠ WARNING

The tyre filler hose and compressor can become hot when inflating the tyre and cause burns if touched.
- Protect your hands and skin from hot components.
- Do not place the hot tyre filler hose or the hot compressor on any inflammable materials.
- Allow the tyre filler hose and compressor to cool down before you stow them.

⚠ WARNING

If the defective tyre cannot be sealed adequately with the breakdown set, the tyre will lose air when driving.
This can lead to tyre failure, loss of control of the vehicle, accidents, serious injuries and death.
- If the tyre will not inflate to at least 2.0 bar (29 psi/200 kPa), the tyre is too damaged. The sealant is unable to seal the tyre. Do not drive on and seek expert assistance instead.
- Do not carry on driving if the tyre pressure is 1.3 bar (19 psi/130 kPa) or less after driving for 10 minutes. Seek expert assistance instead.

Tyre labelling and tyre type

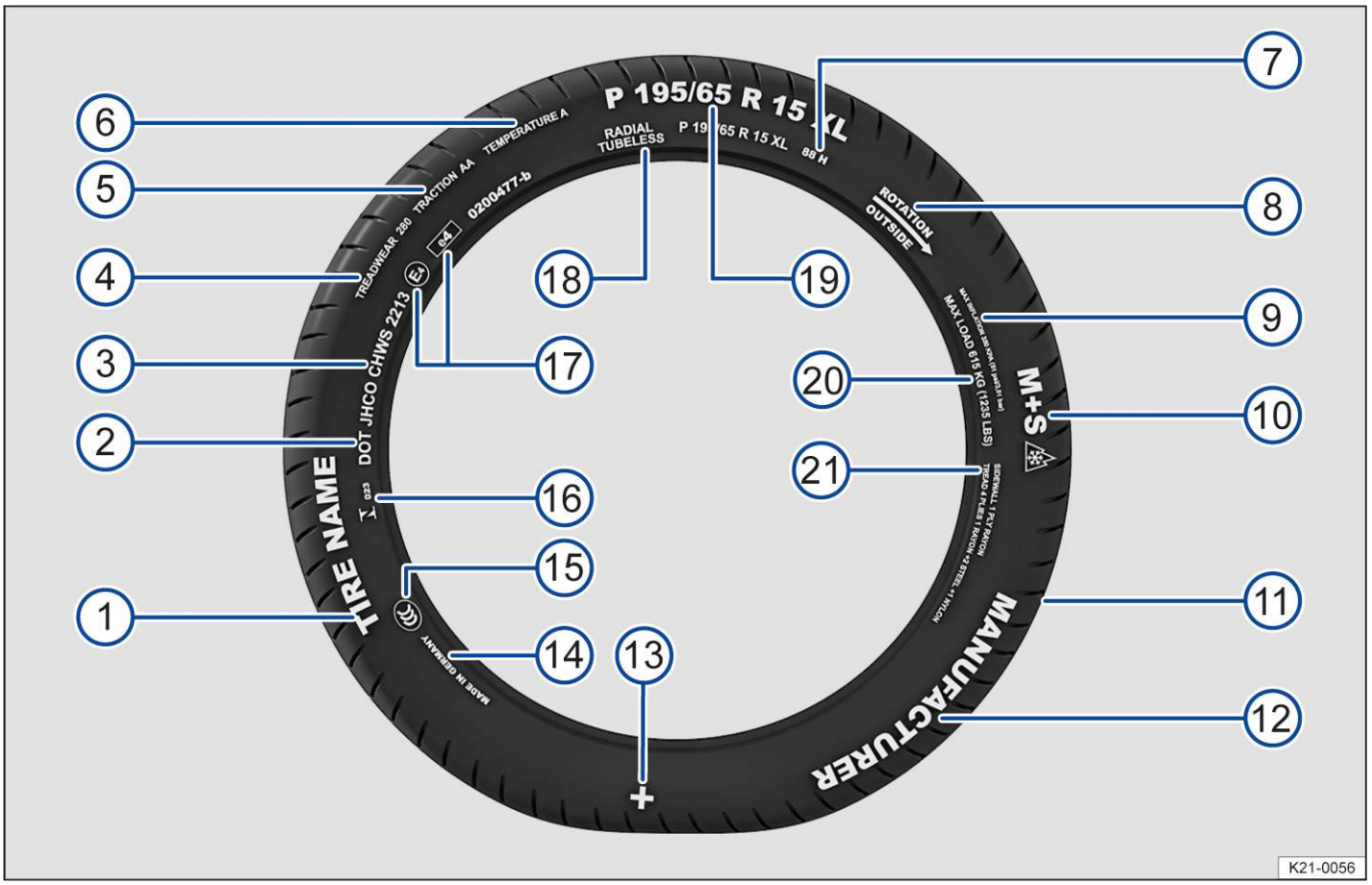

Fig. 1 International tyre labelling.

→ *Fig. 1* Tyre labelling (example), meaning			
1	*Product name*	Individual tyre designation of the manufacturer.	
2	DOT	The tyre complies with the legal requirements of the USA Department of Transportation, responsible for tyre safety standards.	
3	JHCO CHWS 2213	Tyre identification number (TIN – may be only on the inner side of the wheel) and date of manufacture:	
		JHCO CHWS	Identifier of producing plant and specifications of the tyre manufacturer on size and characteristics.
		2,213	Date of manufacture: 22nd week in 2013.
Information for the end user concerning comparative values for specified basic tyres (standardised test procedure) :			
4	TREADWEAR 280	Relative life expectancy for the tyre, with reference to a US-specific standard test. Tyres with the specification *280* wear at a rate of 2.8 times more slowly than standard tyres that have a treadwear value of 100. The performance of tyres is determined by how they are used and can significantly deviate from standard values due to driving style, maintenance, road surface and climatic conditions.	
5	TRACTION AA	Wet braking performance of the tyre (*AA*, *A*, *B* or *C*). The wet braking performance is tested under controlled conditions on certified test tracks. Tyres marked *C* have a low traction performance. The traction value assigned to the tyres is based on linear traction tests and does not include acceleration and lateral stability or aquaplaning and traction under maximum load.	
6	TEMPERATURE A	Temperature stability of the tyre at high speeds on a test bed (*A*, *B* or *C*). *A* and *B* tyres exceed legal requirements. The temperature evaluation is based on tyres with correct pressure and does not allow for excess pressure. Excessive speed, incorrect pressure or excess pressure can cause heat build-up or tyre damage. This applies to one or a combination of these factors.	
7	88 H	Load index → *Tyre load* and speed rating → *Speed rating*.	
8	Rotation and arrow	Denotes direction of rotation of the tyres → *Tyres with directional tread pattern*.	
	Or: Outside	Denotes outside of tyres → *Asymmetrical tyres*.	
9	MAX INFLATION 350 KPA (51 psi/3.51 bar)	US limitation for the maximum air pressure.	
10	M+S *or* M/S *or* ❄	Denotes winter tyres (mud and snow tyres) *(→ Winter tyres)*. Studded snow tyres are labelled with an *E* after the *S*.	
11	TWI	Indicates the position of the tread wear indicator *(→ Tread depth and tread wear indicators)*.	
12	*Brand name, logo*	Manufacturer.	
13	⊕	Marking for Volkswagen Genuine tyres *(→ Wheels and tyres)*.	
14	Made in Germany	Country of manufacture.	
15	㊫	Country-specific identification for China (China Compulsory Certification).	
16	023	Country-specific identification for Brazil.	
17	E4 e4 0200477-b	Indicates conformity with international regulations with the number of the country that granted approval. Approved tyres which comply with ECE regulations are identified with *E*,	

→ *Fig. 1* Tyre labelling (example), meaning			
		tyres which comply with EC regulations are identified with *e*. This is followed by the multiple-digit approval number.	
18	RADIAL TUBELESS	Tubeless radial tyre.	
19	P 195/65 R 15 XL	Size designation:	
		P	Identification for passenger vehicle.
		195	Tyre width from wall to wall in mm.
		65	Aspect ratio in %.
		R	Tyre construction: radial.
		15	Rim diameter in inches.
		XL	Heavy-duty tyres (extra load tyres).
20	MAX LOAD 615 KG (1,235 LBS)	US load data for the maximum load per wheel.	
21	SIDEWALL 1 PLY RAYON	Details of the tyre carcass components: 1 ply of rayon (artificial silk).	
	TREAD 4 PLIES 1 RAYON + 2 STEEL + 1 NYLON	Details of the tread components: In the example there are 4 plies under the tread surface: 1 ply of rayon (artificial silk), 2 steel belt plies and 1 nylon ply.	

The tyre labelling is located on both sides. Certain labels may only be found on one side of the tyre, e.g. tyre identification number and manufacturing date.

Any further numbers and letters are internal codes used by the tyre manufacturer or country-specific codes.

Low-profile tyres

Low-profile tyres have a wider tread surface, larger rim diameter and lower side walls than conventional wheel/tyre combinations. Low-profile tyres can improve the vehicle's handling and precision. They may however result in a less comfortable ride on uneven road surfaces and tracks.

Tyres with directional tread pattern

An arrow on the tyre sidewall indicates the direction of rotation on tyres with directional tread. The direction of rotation must be observed in all cases. This guarantees the best possible running characteristics.

If, however, the tyre is fitted in the opposite direction to the tread pattern, you must take more care when driving as the tyre is now no longer being used according to its designation. The tyres must be replaced as quickly as possible or be fitted with the tread in the correct direction.

Asymmetrical tyres

Asymmetrical tyres take into account the differing behaviour of the inner and outer areas of the tread pattern. The sidewalls of asymmetrical tyres are marked to indicate "inside" or "outside". Always observe the correct tyre position on the wheel rim.

Tyre load

The load index indicates the maximum load capacity of an individual tyre in kilograms (tyre load).

Examples:

78

425 kg (936 lbs)

81

462 kg (1,018 lbs)

83

487 kg (1,073 lbs)

85

515 kg (1,135 lbs)

87

545 kg (1,201 lbs)

88

560 kg (1,234 lbs)

91

615 kg (1,355 lbs)

92

630 kg (1,388 lbs)

93

650 kg (1,433 lbs)

95

690 kg (1,521 lbs)

97

730 kg (1,609 lbs)

99

775 kg (1,708 lbs)

100

800 kg (1,763 lbs)

101

825 kg (1,818 lbs)

102

850 kg (1,873 lbs)

103

875 kg (1,929 lbs)

104

900 kg (1,984 lbs)

Speed rating

The speed rating indicates the maximum permitted speed that may be driven with the tyre.

P

max. 150 km/h (93 mph)

Q

max. 160 km/h (99 mph)

R

max. 170 km/h (106 mph)

S

max. 180 km/h (112 mph)

T

max. 190 km/h (118 mph)

U

max. 200 km/h (125 mph)

H

max. 210 km/h (130 mph)

V

max. 240 km/h (149 mph)

W

max. 270 km/h (168 mph)

Y

max. 300 km/h (186 mph)

Z

above 240 km/h (149 mph), also ZR depending on manufacturer

Maximum load and speed range for tyres

Vehicles in the EU and the EU user states are issued an EC Certificate of Conformity. The EC Certificate of Conformity details the size, diameter, tyre load and speed range of all tyres approved by Volkswagen for the relevant vehicle type.

The type plate shows whether there is an EC Certificate of Conformity for this particular vehicle .

— If the type plate has a row marked “Permit” then the vehicle has an EC Certificate of Conformity.

— If there is no type plate, or no row marked “Permit” the vehicle does not have an EC Certificate of Conformity.

Service work and digital service schedule

Recording the service work performed (“digital service schedule”)

The service records are stored in a central system by your suitably qualified workshop. Volkswagen recommends using an authorised repairer. This transparent documentation of the service history allows the service operations performed to be reproduced at any time. Each time you have your vehicle serviced, Volkswagen recommends asking for a printed service record, which contains all service work stored in the system.

Regular servicing of your vehicle not only maintains its value, it also ensures that your vehicle remains roadworthy and in working order. You should therefore have your vehicle serviced according to the Volkswagen guidelines.

With every service, the printout of the previous service record is replaced by a current printout.

The digital service schedule is not available in some countries. In this case, your suitably qualified workshop will inform you about the documentation process for service work. Volkswagen recommends using an authorised repairer.

Service work

The following information is documented in the digital service schedule by your suitably qualified workshop or Volkswagen dealership:

— When which service was carried out.

— Whether any repairs are recommended, such as replacement of the brake pads in the near future.

— Whether you had any special requests before or during the maintenance work. Your service advisor will note these on the order.

— Which components and service fluids were changed.

— When your next service is scheduled for.

The type and scope of service work may differ from vehicle to vehicle. Information on specific work for your vehicle can be requested from a suitably qualified workshop. Volkswagen recommends using an authorised repairer.

WARNING

Inadequate servicing and failure to adhere to service intervals can result in breakdowns, accidents and serious or fatal injuries.

- Service work should be carried out by a suitably qualified workshop. Volkswagen recommends using an authorised repairer.

Volkswagen is not responsible for any vehicle damage caused by inadequate service work or the lack of availability of parts.

Inspection

Service event	Service interval
Inspection	According to the service interval display or after two years at the latest.

How do I know which type of service applies to my vehicle?

Information on the type of service that the vehicle requires can be obtained from a suitably qualified workshop. Volkswagen recommends using an authorised Volkswagen repairer for this purpose.

Service interval display

The service interval display in the instrument cluster display shows information about a due inspection *(→ Service interval display)*. If necessary, additional work that is due can then also be carried out, e.g. changing brake fluid.

Information on operating conditions

The specified service intervals and scope of service always apply to vehicles used under normal operating conditions.

If the vehicle is operated under heavy-duty conditions, some work will have to be performed before the next service is due or at shorter intervals than those specified.

Extreme conditions include:

— Use in areas with high levels of dust.

— Driving mainly in winter conditions

This applies particularly to the following components (depending on the vehicle equipment):

— Enhanced air filter with activated carbon

— Air Care enhanced air filter with activated carbon.

The service advisor at your qualified workshop will be pleased to advise you whether your vehicle requires more frequent work due to the conditions under which it is used.

WARNING

Inadequate servicing and failure to adhere to service intervals can result in breakdowns, accidents and serious or fatal injuries.

- Service work should be carried out by a suitably qualified workshop. Volkswagen recommends using an authorised Volkswagen repairer.

Volkswagen is not responsible for any vehicle damage caused by inadequate service work or the lack of availability of parts.

Scope of service

The scope of service includes all inspection work and servicing work that is necessary in order to keep your vehicle roadworthy. This work depends on the operating conditions and vehicle equipment, e.g. engine, gearbox, brakes or service fluids. A suitably qualified workshop can provide information on the work that is required for your vehicle and on the wear limits that apply to components. Volkswagen recommends using an authorised Volkswagen repairer. Alternatively, you can find this out using the electronic repair and workshop information system erWin *(→ Repairs and technical modifications)*.

Inspection work

For example, the components and scope of work listed below can be checked.

Electrics

— 12-volt vehicle battery.

— Lighting.

— High-voltage components.

— Horn.

— Headlight setting.

— Reset service interval display.

Engine and gearbox

— Gearbox and final drive.

— Cooling system.

— Components in the bonnet space.

Running gear

— Swivel joints and track rods.

— Tyres.

— Brake system.

— Drive shaft boots.

— Coupling rod and stabiliser mountings.

— Breakdown set.

— Shock absorbers and coil springs.

Body

— Windscreen.

— Body for corrosion.

— Window wipe/wash system.

— Underbody.

Servicing work

Depending on the operating conditions and vehicle equipment such as engine type, gearbox or fluid used, some maintenance work must be performed on your vehicle in addition to the inspection work. This work is dependent on *time* and *mileage* or only *time* or *mileage*.

For example, the following service fluids and components can be changed.

— Interior filter.

— Brake fluid.

— Refrigerant in the air conditioning system.

A test drive is then carried out.

It is also possible to have servicing work carried out in between the displayed scheduled service events.

The scope of service is subject to change for technical reasons, e.g. continuous further development of components. Your suitably qualified workshop always has the latest information about any changes. Volkswagen recommends using an authorised Volkswagen repairer.

Notes on vehicle care

Regular and expert care helps to maintain your vehicle's condition.

The longer contamination or dirt is left on the surface of vehicle components, the more difficult it can become to clean and treat them. Extended exposure may mean that it is no longer possible to remove contamination or dirt.

Consult a suitably qualified workshop if you have any questions about care products or if components are not listed. Volkswagen recommends using an authorised Volkswagen repairer.

Appropriate accessories are available from a suitably qualified workshop. Volkswagen recommends using Volkswagen Genuine Accessories, which you can purchase from an authorised Volkswagen repairer. Follow the application instructions on the packaging.

WARNING

Improper care, impregnation and cleaning of components can irreparably damage the safety features of the vehicle, e.g. the airbag units, and prevent them from functioning properly. This can lead to serious injuries in the event of an accident.

- Always use suitable cleaning agents. More detailed information is available from a suitably qualified workshop. Volkswagen recommends using an authorised Volkswagen repairer.
- Do not use cleaning agents that contain solvents.
- Vehicle parts must be cleaned according to the manufacturer's instructions.

WARNING

Improper cleaning of the vehicle can cause serious injuries.

- Protect your hands and arms against parts with sharp edges, e.g. when cleaning the insides of the wheel housings.
- Use cleaning agents only in accordance with the manufacturer's instructions.

WARNING

Dirty, misted-up or iced-up windows reduce visibility and can prevent the safety features of the vehicle from functioning properly. This can result in accidents and serious or even fatal injuries.

- Drive only when you have a clear view through all windows.
- Do not treat the windscreen with water-repellent window coating agents. In unfavourable conditions, they can cause increased dazzle.

WARNING

Care products may be toxic, highly flammable and caustic. Improper use of care products or the use of unsuitable care products can cause burns and poisoning and can lead to accidents and serious or fatal injuries.

- Observe the instructions supplied with the product.
- Store care products only in the closed original container.
- Keep children away from all care products.
- Use care products only outside or in well-ventilated rooms so that you do not breathe in any toxic vapours.
- Never use turpentine, engine oil, fuel, nail varnish remover or other volatile fluids for vehicle care.

NOTICE

Contamination with aggressive and solvent-based ingredients can cause irreparable damage to the vehicle equipment, e.g. even if left for only a short time on seat covers or trim parts.

- Do not let contamination or dirt dry.
- Have stubborn stains removed by a suitably qualified workshop.

Washing the vehicle

Washing the vehicle regularly prevents effects of soiling that can damage the paint.

Vehicles with a matt paint finish require special care due to the special paint characteristics.

To wash your vehicle correctly and properly, please observe the following information →ⓘ , →⚠.

⚠ WARNING

After a car wash, the braking action may be delayed as the brake discs and brake pads will be wet, or iced up in winter. The braking distance will increase as a result. This can cause you to lose control of the vehicle and can lead to accidents and serious or fatal injuries.

- Carry out a few careful braking operations to dry the brakes and remove any coating of ice when visibility, weather, road and traffic conditions permit.

NOTICE

Improper vehicle cleaning can cause severe damage to the vehicle.

- Always observe the described tasks for vehicle care and cleaning.
- Always follow the manufacturer's instructions.
- Do not wash the vehicle in direct sunlight.

NOTICE

Wet components can freeze in cold weather and this may prevent them from functioning properly.

- Never aim a water jet directly at doors or the boot lid in cold weather.

Removing stubborn dirt on matt paint

— Soften adhering insects or bird droppings immediately with water if possible and spray with a special cleaner for matt paints.

— Remove tar stains on the paint surface with standard commercially available tar removers. Residue must not be removed by intensive rubbing.

— Remove tree resin and flash rust particles with a special cleaner for matt paints and cleaning clay. Move over the affected locations with the cleaning clay without exerting pressure.

— Spray grease and fingerprints with a special cleaner for matt paint and rub off with a soft microfibre cloth.

Automatic car washes

NOTICE

Washing the vehicle incorrectly can damage the matt paint surface and destroy the matt paint effect.

- Never use wash programs with wax preservation.
- For cleaning, use only cleaning agents that do not contain solid matter or abrasives, e.g. cleaning shampoos or insect remover.
- Do not use insect sponges or coarse sponges.

— For vehicles with matt paint, never select a wash program with wax or use a drying agent.

— For vehicles with matt paint, use only textile car washes and never car washes that use brushes.

— Do not select cleaning programmes with hot wax for vehicles with decorative and protective films.

— Preferably use car washes without brushes.

— To remove residues, also have the underside of the vehicle washed thoroughly on a regular basis.

— Please observe information of the car wash operator, especially where add-on parts such as spoilers are concerned →ⓘ.

Checklist for car wash

✓ The windows must be closed and the exterior mirrors must be folded away.

✓ The Auto Hold function is switched off.

✓ Vehicles with steering column lock: If the vehicle is mechanically pulled through the car wash, the steering must not lock *(→ Steering)*.

✓ Vehicles with position selection: If the vehicle is pulled mechanically through the car wash (tunnel wash), the gearbox must be in neutral position **N**.

The roll-away protection is deactivated .

✓ The windscreen wipers and the rain and light sensor *(→ Rain and light sensor)* are switched off.

✓ If present: the roof aerial was unscrewed and removed.

NOTICE

Car washes that scan the contours mechanically can damage the vehicle and add-on parts, e.g spoilers.

- Observe the information of the car wash operator, particularly if there are add-on parts on the vehicle.

Wash the vehicle in dedicated cleaning areas only. This prevents any waste water contaminated by oil from entering the sewage system.

High-pressure cleaner

Fig. 1 In the bonnet space: do not use a high-pressure cleaner.

— Never use rotary nozzles. Observe the manufacturer's instructions.

— Only use water up to a maximum temperature of +60°C (around +140°F).

— Move the jet of water uniformly so that the nozzle is at least 50 cm (around 20 inches) away from all components.

— Do not point the water jet at the same location for too long.

— Aim the water jet indirectly at sensitive vehicle components if possible, e.g. rubber seals, side windows, gloss strips, tyres, sensors, camera lenses, decorative and protective film.

— Never use a high-pressure cleaner to clean windows that are iced up or covered in snow.

NOTICE

Please note that the sensors in the handles could be activated by a powerful jet of water or steam if a valid remote control key is within the detection range. The windows could open as a result and moisture could enter the vehicle interior. This could lead to the vehicle interior being damaged.

- Never direct the jet of a high-pressure or steam cleaner directly at the sensors in the door handles.

The vehicle may be unlocked if the jet of a high-pressure cleaner or steam cleaner is pointed directly at the sensors in the door handles.

Hand wash

Isolated soiling on the paint can be removed with cleaning clay.

1. Clean the vehicle with plenty of water to remove dust and coarse soiling.
2. In the case of matt paint, remove insects, grease stains and fingerprints with a special cleaner for matt paints. Apply the product with a microfibre cloth with gentle pressure.
3. Clean with a soft sponge, a wash mitt or a brush applying only light pressure. Start with the roof and work from the top to the bottom. Use a cleaning shampoo only for very stubborn dirt.

   In the case of matt paint, clean from top to bottom with a neutral cleaning shampoo and a microfibre cloth. Thoroughly wash out the microfibre cloth at short intervals.
4. Clean wheels and side members with a clean sponge.
5. Rinse off with plenty of water.
6. Allow the vehicle to dry in the air.
7. Remove water residue with a chamois leather.

If the dirt on the paintwork could not be removed by hand washing, isolated dirt can be removed with cleaning clay.

Notes on the high-voltage system

End the charging process and completely close the charging socket before washing the vehicle.

Also observe the safety information for the high-pressure cleaner →⚠.

⚠ WARNING

Improper handling of a high-pressure cleaner can damage the high-voltage system and the 12-volt vehicle electrical system. This could cause accidents and serious or fatal injuries.

- Never point the jet from the high-pressure cleaner straight at the orange high-voltage cables or at components belonging to the high-voltage system or the 12-volt vehicle electrical system.

Caring for and cleaning the vehicle exterior

The following overview contains recommendations for cleaning and care of individual vehicle components.

NOTICE

Incorrect cleaning and care may cause vehicle damage.

- Always follow the manufacturer's instructions.
- Do not use excessively hard or abrasive cleaning tools.

Windows, glass surfaces

— Remove wax residue, e.g. from care products, using a suitable glass cleaner or with the Volkswagen Genuine cleaning cloth.

— Remove snow with a hand brush.

— Remove ice with a plastic scraper. Move the scraper in one direction only.

— Thaw ice with a suitable de-icer or with Volkswagen Genuine de-icer.

— Clean the wiper blades or replace them as required.

Paint

Always treat surfaces with care so as not to remove the paint.

— Use a clean, soft cloth and a mild soap solution consisting of a maximum of two tablespoons of neutral soap diluted in one litre of water or cleaning clay to remove any light dirt immediately, e.g. deposits, insect residue, or cosmetics.

— Moisten flash rust deposits with a soap solution. Then remove any deposits with cleaning clay.

— Have corrosion removed by a suitably qualified workshop. Volkswagen recommends using an authorised Volkswagen repairer.

— In the event of paint damage, go to a suitably qualified workshop and have the paint damage repaired. Volkswagen recommends using an authorised Volkswagen repairer.

Waxing protects the paintwork. The vehicle should be protected again using a preservative wax at the latest when water no longer clearly forms small drops and runs off the paintwork when the vehicle is clean.

— In the case of matt paint, use a soft sponge to apply a special wax for matt paints to the cleaned vehicle. Remove excess wax with a microfibre cloth.

Polishing is only necessary if the paint has lost its shine, and the gloss cannot be brought back by applying wax.

NOTICE

The surface of matt paintwork will be irreparably damaged by polishing the paint.

- Never polish matt-painted surfaces.

Even if a preservative wax is used regularly in the car wash, Volkswagen recommends protecting the paint with suitable hard wax or with Volkswagen Genuine hard wax at least twice a year.

Plenum chamber, bonnet space

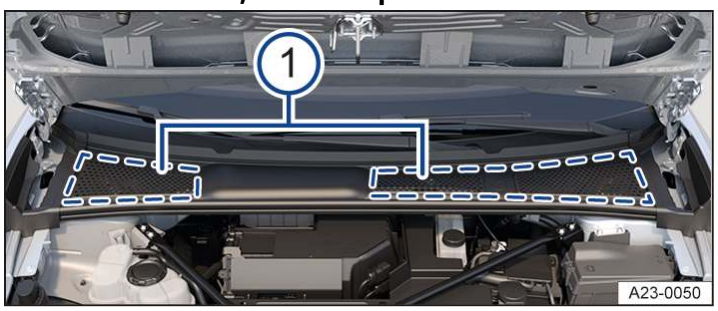

Fig. 1 Between the bonnet space and the windscreen: plenum chamber (illustration).

(1) Perforated cover on plenum chamber.

WARNING

There is a risk of accident and fire when working in the bonnet space. Serious injuries may occur.

- Note the operations required and the necessary safety precautions before performing any work in the bonnet space *(→ In the bonnet space)*.
- If you are not familiar with the work, have the work carried out by a suitably qualified workshop. Volkswagen recommends using an authorised Volkswagen repairer.

NOTICE

The drainage channels for the plenum chamber may become blocked by leaves and dirt. Water that does not drain off can get into the vehicle interior and cause damage.

- Have the area under the perforated cover cleaned regularly by a suitably qualified workshop → *Fig. 1* (1). Volkswagen recommends using an authorised Volkswagen repairer.

NOTICE

Water that has entered the plenum chamber via a manual process (e.g. from a high-pressure cleaner) can cause considerable damage to the vehicle.

- Remove leaves and other loose objects on the perforated cover with a vacuum cleaner or by hand → *Fig. 1* (1).
- Make sure that large quantities of water do not enter the plenum chamber, e.g. due to use of a high-pressure cleaner.
- Always have the bonnet space checked by a suitably qualified workshop. Volkswagen recommends using an authorised Volkswagen repairer.

Sensors, camera lenses

Fig. 2 At the rear of the vehicle: rear view camera system in the Volkswagen badge (illustration).

The rear view camera system is available depending on the vehicle equipment.

— Clean the area in front of the sensors or camera with a soft cloth and solvent-free cleaning agent.

— Use the same method to clean sensitive surfaces on the rain and light sensor and the camera window on the windscreen as used for glass surfaces (depending on vehicle equipment).

— Remove snow with a hand brush.

— Never use warm or hot water.

— Thaw ice with a suitable de-icer or with Volkswagen Genuine de-icer.

Cleaning the rear view camera system

1. Switch on the ignition.
2. Turn the driving mode selector to **R**.
3. Switch on the electronic parking brake.
4. Clean the camera lens.

Decorative films, protective films

— Remove soiling in the same way as for paint. Use a suitable plastic cleaner or Volkswagen Genuine plastic cleaner for matt decorative films.

— Treat the vehicle with liquid hard wax every three months after washing and removing dust. Only use clean, soft microfibre cloths to apply the wax. Do not use hot wax – also not in car washes!

— Remove stubborn impurities carefully using white spirits, and then rinse using warm water.

The durability and colour of decorative and protective films may be affected by environmental influences such as sunlight. Decorative films may show signs of wear and ageing after around one to three years, and protective films after two to three years. In very hot climates, decorative films may become faded within one year and protective films within two years.

Trim parts made of chrome-plated plastic, aluminium or stainless steel

— Clean the surface with a suitable chrome and aluminium care product or with the Volkswagen Genuine chrome and aluminium care product.

— Chrome-plated trim parts can be preserved with a suitable hard wax or Volkswagen Genuine hard wax.

Headlights, tail light clusters

— Remove soiling using a soft sponge soaked with a mild soap solution consisting of a maximum of two tablespoons of neutral soap diluted in one litre of water. Do not use any cleaning agents that contain alcohol or solvents.

— Remove stubborn dirt with a suitable chrome and aluminium care product or with the Volkswagen Genuine chrome and aluminium care product.

Wheels

— Remove dirt and gritting salt deposits with plenty of water.

— Clean dirty alloy wheels with a suitable wheel rim cleaner or with Volkswagen Genuine wheel rim cleaner. Volkswagen recommends treating the wheel rims with a suitable hard wax or with Volkswagen Genuine hard wax every three months.

— Repair any damage to the protective paint coating immediately with a touch-up pen. Go to a suitably qualified workshop if necessary. Volkswagen recommends using an authorised Volkswagen repairer.

— Remove brake dust with a suitable wheel rim cleaner or with Volkswagen Genuine wheel rim cleaner.

Door lock cylinders

1. Thaw door lock cylinders with a suitable door lock de-icer or with the Volkswagen Genuine de-icer.

   Do not use door lock de-icer containing degreasing substances.

Cleaning and care of the vehicle interior

The following overview contains recommendations for cleaning and care of individual vehicle components.

NOTICE

Improper cleaning and care may damage the vehicle.

- Always observe the described tasks for vehicle care and cleaning.
- Do not use a steam cleaner, brushes or hard sponges etc.
- Have stubborn stains removed by a suitably qualified workshop. Volkswagen recommends using an authorised Volkswagen repairer.

Windows

— Clean windows with a glass cleaner.

— Wipe the windows dry with a clean chamois leather or a lint-free cloth.

Textiles, microfibre cloth and leatherette

— Regularly remove dirt particles adhering to surfaces with a vacuum cleaner so that the material is not permanently damaged by abrasion.

— Remove dirt with a suitable interior cleaner or with Volkswagen Genuine interior cleaner.

— In the case of grease-based soiling such as oil, use a suitable interior cleaner or Volkswagen Genuine interior cleaner. Dab off dissolved grease and colour particles with an absorbent cloth. Then treat with water if necessary.

— In the case of soiling caused by ballpoint pens or nail vanish, for example, use a suitable interior cleaner or Volkswagen Genuine interior cleaner. If necessary, treat subsequently with a mild soap solution consisting of a maximum of two tablespoons of neutral soap diluted in one litre of water.

— Never use leather care agents, solvents, wax polish, shoe cream, stain removers or similar.

— Never use high-pressure cleaners, steam cleaners and coolant spray.

Natural leather

— Remove fresh contamination using a cotton cloth with a mild soap solution consisting of a maximum of two tablespoons of neutral soap diluted in one litre of water. Do not allow fluids to seep into the seams.

— In the case of soiling caused by ballpoint pens or nail vanish, for example, use a suitable leather cleaner or Volkswagen Genuine leather cleaner.

— Treat dried-in stains with a suitable leather cleaner or Volkswagen Genuine leather cleaner.

— For grease-based soiling such as oil, remove fresh stains with an absorbent cloth.

— Apply leather care agent for seating furniture regularly and each time after the leather is cleaned. If the vehicle is parked outdoors for long periods, you should cover the leather to protect it from direct sunlight.

Never treat leather with solvents, wax polish, shoe cream, stain removers or similar.

Plastic parts

— Clean with a soft, moist cloth.

— If stubborn soiling cannot be removed with mild soap solution (consisting of a maximum of two tablespoons of neutral soap diluted in one litre of water), use a solvent-free plastic cleaning agent or Volkswagen Genuine plastic cleaner if necessary.

Trim parts, trim strips made of chrome, aluminium or stainless steel

— Clean with a clean, soft cloth and mild soap solution consisting of a maximum of two tablespoons of neutral soap diluted in one litre of water in a dust-free environment.

— Treat anodised surfaces with a suitable chrome and aluminium care product or with the Volkswagen Genuine chrome and aluminium care product.

Control elements

1. Remove coarse dirt and other dirt that is difficult to reach using a soft brush.
2. Use a clean, soft cloth with some mild soap solution consisting of a maximum of two tablespoons of neutral soap diluted in one litre of water. Do not allow liquids to enter the controls.

Displays and screens

Do not clean the instrument cluster display and Infotainment system screen with a dry cloth.

1. Switch off the Infotainment system before cleaning.
2. Use a suitable clean, soft cleaning cloth or Volkswagen Genuine cleaning cloth with a little water, a suitable glass cleaner or LCD cleaner →ⓘ.

In the case of stubborn dirt:

1. Moisten dirt with only a little water and allow to soak in →ⓘ.
2. Carefully remove dirt with a clean, soft cloth.

NOTICE

The screen can become cloudy, be damaged or scratched if it is cleaned with the wrong cleaning agents or when dry.

- Use only gentle pressure.
- Do not use aggressive or solvent-based cleaning products.

NOTICE

If the screen is cleaned with too much moisture, it may no longer be possible to operate the screen or the screen may switch off.

- Dry the screen then leave the vehicle locked from the outside for at least 2 minutes.

Rubber seals

— Clean with a soft and lint-free cloth as well as plenty of water.

— Regularly treat with a suitable rubber care product or the Volkswagen Genuine rubber care product.

Seat belts

1. Carefully pull the seat belt right out and leave it out.
2. Remove coarse dirt with a soft brush.
3. If necessary, clean the seat belt with a mild soap solution consisting of a maximum of two tablespoons of neutral soap diluted in one litre of water.
4. Leave the belt fabric to dry completely and then allow it to roll up.

WARNING

Improper cleaning of the seat belts, their anchorages and the belt retractors can cause damage and prevent them from functioning properly. This can result in serious or fatal injuries in the event of an accident.

- Never carry out any modifications on the seat belts for cleaning.
- Never clean the seat belts and their components with chemical agents.
- Do not use any caustic liquids, solvents or sharp objects.
- Protect the belt buckles against the ingress of liquids and foreign bodies.
- Let the cleaned seat belt to dry completely before allowing it to retract.

Wooden trims

Clean with a soft cloth and some mild soap solution consisting of a maximum of two tablespoons of neutral soap diluted in one litre of water.

Cleaning seat covers

If clothing, such as denim, leaves stains on the seat covers, this is not a defect of the cover fabric. If you want to clean the seat covers yourself, please always note that parts of the airbag system and electrical connectors are installed in the seat covers. Improper cleaning, impregnation or soaking can damage these components or interfere with correct functioning of the components. This can in turn then also lead to damage to other parts of the vehicle's electrical system → ⚠.

Depending on the vehicle equipment, seat cushions with seat heating have electrical components and connectors that may be damaged in the event of incorrect cleaning or treatment. This can also result in damage to other parts of the vehicle electrics.

— Never use high-pressure cleaners, steam cleaners and coolant spray.

— Never soak seat covers.

— Never switch on the seat heating to dry the seats.

— Never use impregnation agents.

— Do not use washing paste or fine detergent solutions.

— If in doubt, go to a suitably qualified workshop. Volkswagen recommends using an authorised Volkswagen repairer.

⚠ WARNING

Improper care, impregnation and cleaning of components can irreparably damage the safety features of the vehicle, e.g. the airbag units, and prevent them from functioning properly. This can lead to serious injuries in the event of an accident.

- Always use suitable cleaning agents. More detailed information is available from a suitably qualified workshop. Volkswagen recommends using an authorised Volkswagen repairer.
- Do not use cleaning agents that contain solvents.
- Vehicle parts must be cleaned according to the manufacturer's instructions.

The signs of wear and soiling visible due to normal use are naturally more easily visible in the case of light-coloured materials in the vehicle interior. These signs of use cannot be prevented and also represent unavoidable ageing due to normal use. Please observe the corresponding care instructions.

Accessories and replacement parts

Seek advice from a suitably qualified workshop before purchasing accessories, replacement parts or service fluids, for example if the vehicle is to be retrofitted with accessories or if parts have to be renewed. Qualified workshops can provide information on legal requirements and also recommend accessories, replacement parts and service fluids. Volkswagen recommends using an authorised Volkswagen repairer.

Volkswagen recommends using Volkswagen Genuine Parts or Volkswagen Genuine Accessories, which you can purchase from an authorised Volkswagen repairer. These parts and accessories have been specially tested by Volkswagen for suitability, reliability and safety. A suitably qualified workshop also has the specialist skills for correct installation. Volkswagen recommends using an authorised Volkswagen repairer.

Although the market is constantly scrutinised, Volkswagen cannot assume responsibility for the reliability, safety and suitability of products Volkswagen has not approved. Volkswagen can therefore assume no responsibility for these parts, even if they have been approved by an official testing agency or are covered by an official approval certificate.

Always contact a suitably qualified workshop if you wish to change to different tyre and rim combinations. Volkswagen recommends using an authorised Volkswagen repairer.

Any retrofitted equipment which has a direct effect on the control of the vehicle must be approved by Volkswagen for use in your vehicle and bear the **e** mark (approval symbol of the European Union). These devices include cruise control systems or electronically controlled damping systems, for example.

Any additional electrical components fitted that do not serve to control the vehicle itself must bear the CE mark (manufacturer declaration of conformity in the European Union). Such devices include refrigerator boxes, computers and ventilator fans.

⚠ WARNING

Use of unsuitable replacement parts and accessories can lead to vehicle malfunctions. This also applies to work, modifications and repairs that are not performed correctly. This can lead to vehicle damage and accidents with serious or fatal injuries.

- Have repairs and modifications to your vehicle carried out only by a suitably qualified workshop. Qualified workshops have the necessary tools, diagnostic equipment, repair information and qualified personnel. Volkswagen recommends using an authorised Volkswagen repairer.
- Never fit parts to your vehicle that differ in their design or characteristics from the factory-fitted parts.
- Use only wheel rim and tyre combinations that have been approved by Volkswagen for your vehicle type. More detailed information is available from a suitably qualified workshop. Volkswagen recommends using an authorised Volkswagen repairer.

⚠ WARNING

Objects in the deployment zone of the airbags can be flung through the vehicle interior if the airbags are triggered. This can cause severe or fatal injuries.

- Never secure or position objects in the deployment zones of the airbags.

Sensors and cameras

Incorrectly performed repairs, structural changes to the vehicle, e.g. lowering the suspension, retrofitted add-on parts or changes to the trim can lead to sensors and cameras being displaced or damaged. This can interfere with important functions of driver assist systems →⚠.

— Observe the positions of sensors and cameras in the vehicle overview when performing repairs or modifications.

Add-on parts or modifications in the area of sensors and cameras

⚠ WARNING

If the area in front of and around sensors and cameras is covered, e.g. due to incorrect installation of number plates, number plate holders with trim frames, additionally applied films or paintwork on the sensors and similar, this may prevent correct functioning of the driver assist systems. Failure of the driver assist systems can lead to accidents and cause serious or fatal injuries.

- Always ask a suitably qualified workshop whether installation of a number plate or number plate holder with trim frame is possible for your vehicle. Volkswagen recommends using an authorised Volkswagen repairer.
- When installing, ensure that there is a sufficient distance from sensors and cameras.
- Make sure that the number plate or the number plate holder with trim frame is installed only in the specified position.
- Do not apply any additional films in front of or around sensors.

NOTICE

Incorrect installation of number plate holders with trim frames or number plates can damage components, e.g. cables or sensors.

- Always ask a suitably qualified workshop whether installation of a number plate or number plate holder with trim frame is possible for your vehicle. Volkswagen recommends using an authorised Volkswagen repairer.

The number plate holder with trim frame is used for mounting the official number plate.

The radar sensor can be installed either below the number plate or behind the Volkswagen badge. The number plate or the Volkswagen badge can impair the view of the radar sensor in the front area. Therefore, mount the number plate at a sufficient distance from the radar sensor or only operate the vehicle with the original Volkswagen badge or a badge approved by Volkswagen.

Damage in the area of sensors and cameras

⚠ WARNING

If the area around sensor and cameras is damaged, e.g. by stone chips or impacts when parking, this can prevent the driver assist systems from functioning correctly. Failure of the driver assist systems can lead to accidents and cause serious or fatal injuries.

- Have the component replaced by a suitably qualified workshop in the event of damage in the area of the sensors and cameras. Volkswagen recommends using an authorised Volkswagen repairer.

After replacement of components, the sensors and cameras may have to be adjusted and calibrated by a suitably qualified workshop. Volkswagen recommends using an authorised Volkswagen repairer.

If the windscreen has been damaged in the viewing field of the sensors and camera, e.g. by stone chips, the windscreen must be replaced. Repair of the stone chip damage can lead to malfunctions or functional faults in the driver assist systems. After replacing the windscreen, the cameras and sensors must be adjusted and calibrated by a suitably qualified workshop. Volkswagen recommends using an authorised Volkswagen repairer.

Repairs and technical modifications

Repairs and technical modifications must always be carried out according to Volkswagen specifications → ⚠.

Unauthorised modifications to the electronic components or software in the vehicle may cause faults. As the electronic components are linked together in networks, these faults may indirectly affect the working of other systems. This can seriously impair vehicle safety, lead to excessive wear of components and also invalidate the type approval for the vehicle.

The authorised Volkswagen repairer cannot be held liable for any damage caused by technical modifications and/or work performed incorrectly.

The authorised Volkswagen repairer is not responsible for damage caused by technical modifications and/or work performed incorrectly. Such damage is not covered by the Volkswagen guarantee.

Have all repairs and technical modifications carried out by a suitably qualified workshop. Volkswagen recommends using an authorised Volkswagen repairer that supplies Volkswagen Genuine Parts®.

Volkswagen repair information

Volkswagen Service information and official Volkswagen repair information can be obtained for a fee.

Customers in Europe, Asia, Australia, Africa, Central and South America:

Please contact a suitably qualified workshop. Volkswagen recommends using an authorised Volkswagen repairer. Alternatively, you can register on the internet portal **erWin** (electronic repair and workshop information):

https://erwin.volkswagen.de

Customers in North America and Canada:

To order printed service information please contact:

Volkswagen Technical Literature Ordering Center

literature.vw.com

You can also register online in the **erWin** internet portal:

https://erwin.vw.com

Diagnostic interface (OBD)

There is a diagnostic interface in the vehicle interior for reading the event memories (OBD). Event memories document any errors that have occurred and any deviations from the nominal values in the electronic control units → ⚠.

The diagnostic interface (OBD) is located in the footwell on the driver side underneath the dash panel, or behind a cover next to the bonnet release lever.

The event memory should only be read and reset by a suitably qualified workshop. Additional information on the stored data is available from suitably qualified workshops. Volkswagen recommends using an authorised Volkswagen repairer.

After a fault has been rectified, the information in the event memory relating to the fault is deleted. Other memory content is overwritten on an ongoing basis.

Vehicles with special auxiliary equipment or body parts

Auxiliary equipment and second stage manufacturers must ensure that the equipment and bodies (conversions) adhere to the stipulated environmental laws and regulations, particularly the EU directive 2000/53/EC concerning end-of-life vehicles and EU directive 2003/11/EC concerning the restriction on the marketing and use of certain dangerous substances and preparations.

The vehicle owner must keep all assembly documentation for these conversions and pass it on to the scrapping company upon vehicle handover if the vehicle is scrapped. This is intended to facilitate environmentally responsible disposal for all vehicles, including refitted vehicles.

Engine and transmission guard

An engine and transmission guard can reduce the risk of damage to the vehicle's underbody, for example when driving over kerbs, drive entrances or unsurfaced roads.

Have retrofitting carried out by a suitably qualified workshop. Volkswagen recommends using an authorised Volkswagen repairer.

An engine and transmission guard may not be available in all countries.

WARNING

Incorrect repairs and modifications to the vehicle can impair the effectiveness of the driver assistance systems and the airbags when they trigger. This can cause malfunctions and lead to accidents and serious or fatal injuries.

- Have repairs and modifications to your vehicle carried out only by a suitably qualified workshop. Volkswagen recommends using an authorised Volkswagen repairer.

WARNING

Incorrectly performed repairs and modifications on the vehicle, e.g. through use of unsuitable parts, can damage the vehicle and cause accidents and serious or fatal injuries.

- Never fit parts to your vehicle that differ in their design or characteristics from the factory-fitted parts.
- Use only wheel rim/tyre combinations that have been approved by Volkswagen for your vehicle type. More detailed information is available from a suitably qualified workshop. Volkswagen recommends using an authorised Volkswagen repairer.
- Have repairs and modifications to your vehicle carried out only by a suitably qualified workshop. Volkswagen recommends using an authorised Volkswagen repairer.
- Volkswagen recommends the use of Volkswagen Genuine Parts or Volkswagen Genuine Accessories. These parts and accessories have been specially tested by Volkswagen for suitability, reliability and safety.

WARNING

Use of the diagnostic connection for other than its intended purpose can cause malfunctions and lead to accidents and serious or fatal injuries.

- Never read the event memory yourself using the diagnostic interface.
- Never upload data to the vehicle yourself using the diagnostic connection.
- The event memory should be read only by a suitably qualified workshop using the diagnostic connection. Volkswagen recommends using an authorised Volkswagen repairer.

Repairs and faults in the airbag system

Repairs and technical modifications must always be carried out according to Volkswagen specifications →⚠.

Modifications and repairs to the front bumper, the doors, the front seats, the roof or the bodywork should only be carried out by a suitably qualified workshop. Volkswagen recommends using an authorised Volkswagen repairer. System components and airbag system sensors might be fitted on these vehicle components.

If you work on the airbag system or remove and install parts of the system when performing other repair work, parts of the airbag system may be damaged. The consequence may be that, in the event of an accident, the airbag inflates incorrectly or does not inflate at all.

Regulations must be observed to ensure that the effectiveness of the airbags is not reduced and that removed parts do not cause any injuries or environmental pollution. These requirements are known to suitably qualified workshops. Volkswagen recommends using an authorised Volkswagen repairer.

Any modifications to the vehicle's suspension could prevent the airbag system from working properly during a collision. For example, using wheel rim/tyre combinations that have not been approved by Volkswagen, lowering the vehicle or making modifications to the suspension rate including work on the springs, struts and shock absorbers etc., could change the forces that are measured by the airbag sensors and sent to the electronic control unit. Some changes to the suspension could cause the forces measured by the sensors to increase, for example. This can lead to the airbag system being triggered in collision scenarios where it normally would not be triggered if modifications to the suspension had not been made. Other modifications can cause the forces measured by the sensors to decrease, therefore preventing the airbag system from being triggered when it should have been.

⚠ WARNING

Use of unsuitable replacement parts and accessories can cause malfunctions and damage to the vehicle and impair the effectiveness of the airbag system. This also applies to work, modifications and repairs that are not performed correctly. This can lead to vehicle damage and accidents with serious or fatal injuries.

- Have repairs and modifications to your vehicle carried out only by a suitably qualified workshop. Qualified workshops have the necessary tools, diagnostic equipment, repair information and qualified personnel. Volkswagen recommends using an authorised Volkswagen repairer.
- Please note that the airbag unit cannot be repaired, but must be replaced.
- Never install recycled airbag components or components that have been taken from end-of-life vehicles in your vehicle.
- Never fit parts to your vehicle that differ in their design or characteristics from the factory-fitted parts.

⚠ WARNING

Modification of the vehicle suspension, including the use of non-approved wheel rim and tyre combinations, can change how the airbag functions. This can result in serious or fatal injuries in the event of an accident.

- Never install components in the suspension system which do not have the same characteristics as the original factory-fitted components.
- Use only wheel rim and tyre combinations that have been approved by Volkswagen for your vehicle type. More detailed information is available from a suitably qualified workshop. Volkswagen recommends using an authorised Volkswagen repairer.

Mobile communication in the vehicle

Electromagnetic radiation

If a mobile telephone or radio device is used without being connected to the external aerial, the electromagnetic radiation will not be optimally directed to the outside of the vehicle. Increased levels of radiation in the vehicle interior may occur in areas with poor signal in particular, for instance in rural areas. This could constitute a health hazard →⚠.

Depending on the vehicle's equipment level, a suitable mobile phone interface can be used to connect the mobile telephone to the external aerial. The connection quality is improved and the range is increased.

Using the telephone

Many countries require a hands-free system to be used when using a telephone inside the vehicle, e.g. via a Bluetooth® connection. Before use, secure the mobile telephone to a suitable bracket →⚠ or stow it in a storage compartment so that it cannot slip around, e.g. in the centre console.

Two-way radios

Observe legal requirements and the manufacturer's operating instructions for operating two-way radios. The retrofitting of two-way radios requires authorisation.

Ask a qualified workshop for further information on installation of a two-way radio. Volkswagen recommends using an authorised Volkswagen repairer.

⚠ WARNING

Mobile telephones that are not secured or not properly secured could be flung through the vehicle interior in the event of a sudden driving or braking manoeuvre or accident and cause serious injuries.

- Secure or stow a mobile telephone and accessories safely and outside the deployment zone of the airbags.

⚠ WARNING

If a mobile telephone or two-way radio that is not connected to an external aerial is used, electromagnetic radiation in the vehicle could exceed limit values. This also applies to external aerials which have not been correctly installed. This can endanger the health of the driver and the vehicle occupants.

- Keep a distance of around 20 cm (around 8 inches) between a device's aerial and an active medical implant, e.g. a pacemaker.
- Do not carry device which is operationally ready close to or directly above an active medical implant, e.g. in a breast pocket.
- Switch off the device immediately if you suspect it may be interfering with an active medical implant or any other medical device.

Volkswagen dealership warranty

Volkswagen dealerships guarantee that the vehicles they sell are free from defects. The dealerships are also responsible for handling warranty claims.

Please refer to your sales contract or contact your Volkswagen dealership for details of the warranty and guarantee conditions.

Guarantee for paint and body

In addition to the guarantees and warranties in the purchase agreement for new vehicles, authorised Volkswagen repairers also fulfil the guarantee that exists in many countries that no paint defects or corrosion perforation will occur on the body for a certain period of time.

Depending on country, the following periods apply:

— A three-year guarantee against paint defects.

— A twelve-year guarantee against corrosion perforation. Here, corrosion perforation refers to rust forming on the inside (cavity) of the body and causing holes in the sheet metal.

If such damage occurs nevertheless, it will be repaired free of charge for parts and labour by any authorised Volkswagen repairer.

Guarantee exclusion

Details of the guarantee cover can be found in the guarantee conditions applicable to your vehicle in your country.

The guarantee does not cover the following:

— Damage caused by external influence or insufficient care.

— Imperfections on the body or paintwork which are not repaired promptly according to manufacturer specifications.

— Corrosion perforation that is directly related to body repairs not being carried out according to manufacturer specifications.

If the body is repaired or painted, your authorised Volkswagen repairer will confirm your warranty against corrosion perforation for the repaired area.

Guarantee for high-voltage batteries in electric and hybrid vehicles

In addition to the above warranties and guarantees, authorised Volkswagen repairers also fulfil the warranty for high-voltage batteries that exists in many countries.

Please refer to your sales contract or contact your authorised Volkswagen repairer for details of the warranty conditions.

Operating data and data storage

Data processing in the vehicle

Your vehicle is fitted with electronic control units. Control units process data that they receive from vehicle sensors, generate themselves or exchange with each other, for example. Some control units are required for the safe functioning of your vehicle. Other control units support you when driving (driver assist systems), while others enable convenience features or additional functions of the Infotainment system.

Operating data in the vehicle

Control units process data for a specific purpose for vehicle operation.

These include, for example:

— Vehicle status information, e.g. deceleration, deactivation times of the speed warning function and display of fastened seat belts.

— Ambient conditions, e.g. temperature, data from sensors for Adaptive Cruise Control.

— Image recordings, e.g. data from camera-assisted driver assist systems.

Storage of operating states

Recordings and other data for a specific purpose are normally fleeting and are normally processed directly in the vehicle itself and not stored.

However, control units can also contain data memories that record data and store it permanently or temporarily.

This includes the following information, for example:

— Vehicle health.

— Component loads.

— Upcoming maintenance requirements.

— Other events.

Depending on the technical equipment, the following data is stored:

— Operating states of system components, e.g. filling levels, tyre pressure, status of the vehicle battery.

— Faults or malfunctions in important system components, e.g. lights, brakes.

— System reactions to specific driving situations, e.g. triggering of an airbag, intervention of driver assist systems.

— Information on events which damaged the vehicle.

In special cases, e.g. when the vehicle has detected a malfunction, it may be necessary to store data that would normally only be volatile.

Reading out data

If you make use of services, e.g. repairs or maintenance work, the stored operating data can, if necessary, be read and used together with the vehicle identification number. The data can be read from the vehicle by employees of the service network (e.g. qualified workshops) or third parties (e.g. breakdown services). The same applies to warranty cases and quality assurance measures.

The data is read via the legally prescribed OBD connection (on-board diagnosis) in the vehicle. The operating data that is read documents the technical status of the vehicle or individual components thereof and provides support with fault diagnosis, compliance with warranty obligations and quality improvement. This data, in particular information on component loads, operating errors and other faults, is transmitted to Volkswagen together with the vehicle identification number in cases where this is expedient. In addition, Volkswagen may use the data for reasons related to product liability and product safety, e.g. for recall campaigns. This data can also be used to check the customer’s warranty and guarantee claims.

Depending on equipment and country, data may also be read from your vehicle online with your consent. In addition to the reasons stated above, this takes place for the purpose of improving products and services, among other things.

Event memories in the vehicle can be reset by a service workshop as part of repair or service work or if you request this.

Personal reference

Each vehicle has a unique vehicle identification number. Depending on country, this vehicle identification number can be traced back to the current and former owners of the vehicle using information provided by the relevant authorities. There are also other ways of tracing the vehicle to the owner or driver, via data collected for the vehicle e.g. the registration number.

The data generated or processed by control units may therefore be personal data or under certain conditions is personal data. Depending on the vehicle data available, it may be possible to draw conclusions, e.g. about your driving behaviour, your location or your route or your usage behaviour.

Your rights regarding data protection

In accordance with the valid data protection legislation in your country, you may have certain rights vis-à-vis Volkswagen when your personal data is processed.

Accordingly, you may be entitled to receive comprehensive information free of charge from Volkswagen and third parties, e.g. commissioned qualified workshops, if they have stored your personal data. You are entitled to request information concerning what personal data and for what purpose it is stored as well as where the data originates from. Your right to information may also include the transfer of data to other bodies.

Data that is only stored locally in the vehicle can be read out with expert assistance, for example at a suitably qualified workshop. This service may be subject to a fee. Volkswagen recommends using an authorised Volkswagen repairer.

Further information on your legal rights, e.g. your right to deletion or correction of the data, can be found in the applicable data protection information on the website of Volkswagen, including contact details and information about the Data Protection Officer.

Detailed information on data processing can be found in the Infotainment system in the app overview under **Legal information**.

To ensure that the information under **Legal information** is up to date, the vehicle must not be permanently in offline mode. Otherwise, the information cannot be updated. If the information is out of date, you will be informed of this via a pop-up.

Legal requirements for the disclosure of data

Depending on country, Volkswagen AG as the vehicle manufacturer is legally obliged to transmit the following information relating to the use of driver assist systems, e.g. ACC, to the responsible authority:

— Relationships of the times or distances covered with driver assist systems switched on and off.

— Relationships of the times and distances covered in compliance with and in violation of the detected speed limits.

— Where appropriate, average time between the driver switching the driver assist system on and off.

When vehicles visit a qualified workshop, the qualified workshop reads the specified data out of the vehicles and transmits this data to Volkswagen AG. Volkswagen AG processes this data so that there is no longer any direct link to you, your vehicle or the VIN of your vehicle. Volkswagen AG forwards the information processed in the way to the responsible authority, which processes the data in order to fulfil legal tasks.

If legal requirements exist, Volkswagen is obliged to disclose data stored at Volkswagen to the extent required to government agencies in individual cases, e.g. as part of a police investigation of a criminal offence.

Within the framework of applicable law, government agencies are also authorised to read data from vehicles themselves in individual cases. In the event of an accident, information can be read from the airbag control unit to help clarify the situation.

Reprogramming control units

All data for the control of components is stored in the control units. Some convenience functions can be reprogrammed using special workshop equipment. If the convenience functions are reprogrammed, the specifications and descriptions in this owner's manual will no longer match the original functions. Depending on country, the reprogramming can be entered into the digital service schedule by a suitably qualified workshop. Volkswagen recommends using an authorised Volkswagen repairer.

A suitably qualified workshop can provide information about any potential reprogramming. Volkswagen recommends using an authorised Volkswagen repairer.

Convenience features

You can personalise convenience settings, save them in the vehicle, change them, retrieve data from the vehicle when using online services, or reset or delete settings *(→ Introduction to the Infotainment system)*.

Infotainment system

Depending on the equipment installed, you may be able to store your own data in the vehicle's Infotainment system *(→ Introduction to the Infotainment system)*.

Integration of mobile telephones

If your vehicle contains the necessary equipment, you can connect your mobile telephone or any other mobile end device to your vehicle so that you can control this device via the controls integrated in the vehicle when the corresponding functions are available. For example, images and sounds from the mobile telephone can be output through the Infotainment system. At the same time, certain information is sent to your mobile telephone. This includes location data and further general vehicle information, depending on the type of integration.

This enables you to use selected mobile telephone apps in the vehicle, e.g. for navigation. The mobile telephone and vehicle do not interact in any other ways than those described here; in particular the device does not actively access vehicle data. The type of further data processing depends on the app provider. The settings that you can adjust here depend on the app you are using and the operating system on your mobile telephone.

Online services

If your vehicle is equipped with a connection to a mobile network, your vehicle will be able to exchange data with other systems. This mobile network connection enables you to use online functions. This includes online services and apps provided by Volkswagen or other third-party providers.

Manufacturer services

In the case of Volkswagen online services, Volkswagen describes the respective functions in a suitable place, e.g. in a separate service description or on an Internet page, and the associated privacy information is provided. Personal data may be required in order to provide online services. For this, data is exchanged over a secure connection, e.g. using the designated IT systems of the manufacturer. Any collection, processing and use of personal data that goes beyond the provision of the service takes place exclusively according to legal regulations, contractual agreements or the necessary permission.

You can activate and deactivate the services and functions, some of which are subject to a fee and in some cases also disable the vehicle's entire data connection. This does not apply to any functions and services required by law, e.g. emergency call systems.

Third-party services

If you are able to use online services provided by a party other than the manufacturer, these services are the sole responsibility of the provider in question and are subject to this provider's data protection policy and terms and conditions of use. Volkswagen has no influence on the data processing that takes place here and the content exchanged as part of these services.

Please refer to the provider in question for information about the type, scope and purpose of the collection and use of personal data related to third-party services.

Event data recorder

This vehicle is equipped with an event data recorder (EDR). The main purpose of an EDR is to record, in certain crash or near crash-like situations, such as an air bag deployment or hitting a road obstacle, data that will assist in understanding how a vehicle's systems performed. The EDR is designed to record data related to vehicle dynamics and safety systems for a short period of time, typically 30 seconds or less. The EDR in this vehicle is designed to record such data as:

— How various systems in your vehicle were operating;

— Whether or not the driver and passenger safety belts were buckled/fastened;

— How far (if at all) the driver was depressing the accelerator and/or brake pedal; and,

— How fast the vehicle was traveling.

These data can help provide a better understanding of the circumstances in which crashes and injuries occur.

Data from driver assist systems is also recorded. In addition to information about whether the systems were switched on or off, available only to a restricted extent or inactive, it is also possible to determine whether these functions steered, accelerated or braked the vehicle in the above-described situations. Depending on the vehicle equipment, these systems include the following:

— Adaptive Cruise Control (ACC).

— Lane keeping system (Lane Assist).

— Park Assist.

— Emergency braking functions (Front Assist).

NOTE: EDR data are recorded by your vehicle only if a non-trivial crash situation occurs; no data are recorded by the EDR under normal driving conditions and no personal data (e.g., name, gender, age, and crash location) are recorded. However, other parties, such as law enforcement, could combine the EDR data with the type of personally identifying data routinely acquired during a crash investigation.

To read data recorded by an EDR, special equipment is required, and access to the vehicle or the EDR is needed. In addition to the vehicle manufacturer, other parties, such as law enforcement, that have the special equipment, can read the information if they have access to the vehicle or the EDR.

Volkswagen will not access, read or process data from the event data recorder unless the vehicle keeper grants their permission. Exceptions to this are contractual or legal provisions.

Due to its legal product monitoring obligations, Volkswagen is entitled to use the data for field monitoring and also for research purposes and quality improvements. For research purposes, Volkswagen makes the data available to third parties in anonymous form, in other words without any reference to the individual vehicle or vehicle keeper.

Infotainment system and antennas

The aerials for the Infotainment system are installed at different points in the vehicle:

— On the windscreen between the glass layers.

— On the inside of the rear window.

— On the inside of the rear side windows.

— On the roof of the vehicle.

Aerials on the interior of the windows can be identified as thin conductors.

NOTICE

Aerials located on the inside of the windows could be damaged by corrosive or acidic substances or if hard objects rub against the window.

- Do not affix any stickers over metal conductors, e.g. in the area of the rear window.
- Never clean the aerials with corrosive or acidic agents.

NOTICE

A retrofitted Infotainment system that is not compatible with the aerial amplifier fitted as standard can damage the aerial amplifier.

- Consult a suitably qualified workshop before retrofitting an Infotainment system. Volkswagen recommends using an authorised Volkswagen repairer.

Component protection

Some electronic components and control units are fitted with component protection as standard, e.g. the Infotainment system.

The component protection permits a correspondingly qualified workshop to legitimately install or replace components and control units. Volkswagen recommends using a Volkswagen dealership.

The component protection prevents the full operation of factory-supplied components outside the vehicle in the following situations:

— Installation in other vehicles, e.g. after theft.

— Operation of components outside the vehicle.

If a text message about component protection appears in the display of the instrument cluster or the screen of the Infotainment system, go to a correspondingly qualified workshop. Volkswagen recommends using a Volkswagen dealership.

Third-party copyright information

Open source

Some of the products installed in the vehicle contain software components for which Open Source licences are required.

A list of the open source software components used, including information on copyright, as well as the respective open source licence conditions and the corresponding licence texts can be obtained via the website specified below. Volkswagen can make the source code available to you in accordance with the relevant licence conditions. You will be charged only for the actual costs of provision, e.g. shipping costs. You can find the necessary information on the website

https://www.volkswagen.com/softwareinfo

Information stickers and plates

Stickers and plates showing important information for vehicle operation are factory-fitted in the bonnet space and on certain vehicle parts.

— Never remove stickers and plates or render them illegible.

— If vehicle parts bearing stickers or plates are removed from the vehicle, replacement stickers or plates with the same information must be applied properly in the same place on the new parts by a suitably qualified workshop. Volkswagen recommends using an authorised Volkswagen repairer.

Safety certificate

There is a safety certificate on the door pillar of the driver door which states that all necessary safety standards and specifications from the transport safety authorities of the particular country were met at the time of production. The month and year of production and the vehicle identification number may also be listed. Observe notes in the owner's manual.

High-voltage warning sticker

Stickers with warnings about the high voltage in the vehicle electrical system are affixed in the vehicle front end and on high-voltage components, including the high-voltage battery *(→ High-voltage warning signs)*.

WARNING

Removal of stickers and signs reduces the amount of information about sources of danger and can result in less attention being paid when working on the vehicle. This can lead to serious accidents and fatal injuries.

- Never remove stickers or signs or make them illegible.
- Observe legal requirements.
- Observe the owner’s manual.

NOTICE

Removal of stickers and signs increases the risk of incorrect operation and can result in damage to the vehicle.

- Never remove stickers or signs or make them illegible.
- Observe legal requirements.
- Carry out servicing work in accordance with the specifications.

Fluids in the air conditioning system

Refrigerant in the air conditioning system

The sticker in the bonnet space contains information regarding the type and quantity of refrigerant used in the vehicle's air conditioning system. The sticker is located in the front part of the bonnet space →.

Details of the refrigerant used

The air conditioning system contains fluorinated greenhouse gas.

Valid for vehicles with refrigerant R-1234yf:

Refrigerant weight	CO_2 equivalent	Global warming potential
460 g	0.0002 t	0.501

Refrigerant oil in the air conditioning system

The air conditioning system is filled with a refrigerant oil. Consult a suitably qualified workshop for information about the type and quantity of the refrigerant oil used. Volkswagen recommends using an authorised Volkswagen repairer.

Warning: maintenance of the air conditioning system requires qualified personnel.

Type of refrigerant.

Type of refrigerant oil.

See workshop information (available only for authorised Volkswagen repairers).

Maintenance of the air conditioning system requires qualified personnel.

Flammable refrigerant.

Make sure you dispose of all components correctly and never install components taken from older vehicles or recycling facilities into the vehicle.

DANGER

Maintenance of the air conditioning system by unqualified personnel may cause serious and fatal injuries.

- To service the air conditioning system, contact qualified personnel who are trained according to the nationally required standards, e.g. SAE standard J2845.
- Observe the service intervals specified by Volkswagen. Please contact a suitably qualified workshop. Volkswagen recommends using an authorised Volkswagen repairer.

DANGER

The refrigerant is flammable and can lead to serious and fatal injuries if maintenance is not performed correctly.

- Have the air conditioning system serviced by suitably qualified personnel.
- Keep the vehicle away from naked flames, sparks and other sources of ignition.

DANGER

The refrigerant is pressurised and can explode if heated. This can lead to serious accidents and fatal injuries.

- Have the air conditioning system serviced by suitably qualified personnel.
- Keep the vehicle away from naked flames, sparks and other sources of ignition.

DANGER

The refrigerant can form toxic vapours if it comes into contact with hot surfaces. If these are breathed in, this can result in poisoning or even death.

- Have the air conditioning system serviced by suitably qualified personnel.

NOTICE

Repairing or replacing the evaporator with spare parts from end-of-life vehicles or recycling may damage the air conditioning system.

- Never have repairs on the evaporator carried out with replacement parts from end-of-life vehicles or from recycling.

Information in accordance with the EU Chemicals Regulation REACH

In keeping with the European regulation on chemicals REACH, Volkswagen would like to inform you about substances that may be contained in your vehicle.

You can access this information online using your vehicle identification number:

https://reachinfo.volkswagen.com

Recycling symbols

Recycling information for France

Fig. 1 Recycling information for France.

Observe the recycling information → *Fig. 1*, which includes the following items:

— Vehicle key.

Fig. 2 Recycling information for France.

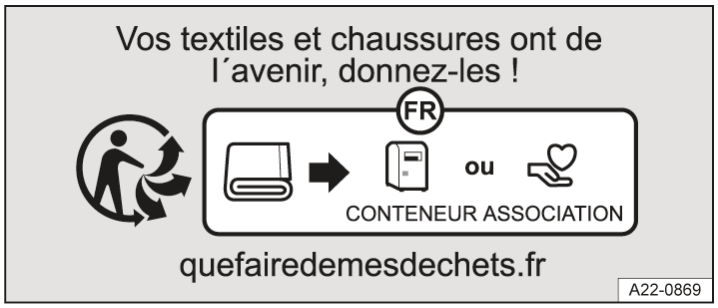

Fig. 3 Recycling information for France.

Observe the recycling information → *Fig. 2*, → *Fig. 3* for accompanying documentation and packaging or bags. This recycling information includes the following items:

— Vehicle wallet.

The Triman logo and Info-tri symbol contain important sorting information for the end user.

Product recycling

Disposal of used batteries

Used batteries must be collected separately and recycled by the end user. This is indicated by the symbol with the crossed-through waste bin. As the end user, you are required by law to return used batteries →.

— In EU member states and other states, device batteries and vehicle batteries can be returned to your authorised Volkswagen repairer or approved return systems.

— You can return high-voltage batteries to your authorised Volkswagen repairer.

— Further information on return and recycling can be obtained from your authorised Volkswagen repairer or at:

https://www.volkswagen.com

Disposal of old electrical and electronic devices

Your vehicle contains electrical and electronic devices, e.g. remote controls. These devices are marked with a symbol showing a crossed-through waste bin.

The corresponding legal regulations stipulate that old devices with this marking must be collected and disposed of separately from normal household waste. You can hand in these devices at local collection points or any nationally authorised return systems.

In Germany, retailers with a sales area of at least 400 m2 for electrical devices and food retailers with a total sales area of at least 800 m2 who offer new electrical devices are obliged to take back these devices free of charge. When purchasing a new device, the end user is entitled to return an equivalent old device. The same also applies for delivery to private households and sale via the internet. Small old devices can be returned to retailers even if no new device is purchased. Your authorised Volkswagen repairer is also obliged to take back up to three old devices with an edge length of less than 25 cm free of charge.

— Batteries, rechargeable batteries or lamps that are not a fixed part of the device must be removed first and disposed of accordingly.

— You must delete all stored personal data before disposing of the old devices.

Further information on return and recycling can be obtained from your authorised Volkswagen repairer.

WARNING

If batteries containing lithium are damaged, gaseous or liquid substances may escape, posing a significant risk to health and the environment. A short circuit of the terminals can also cause a fire or explosion. This can result in serious or fatal injuries.

- Handle batteries containing lithium with special care.
- Never heat batteries containing lithium.
- Never damage batteries containing lithium.
- Never short circuit the battery terminals.

Batteries that contain heavy metals are marked with the chemical symbols Hg (mercury), Cd (cadmium) and/or Pb (lead). Heavy metals can damage the health of human beings and animals and can accumulate in the environment.

- To avoid this, please ensure that your used batteries are collected separately and returned properly.

Returning and scrapping end-of-life vehicles

Returning end-of-life vehicles

At the end of its life, your vehicle must be recycled and disposed of in an environmentally appropriate way. For this reason, the last vehicle keepers in the EU and many other countries are required by law to take their vehicle to an approved collection point, vehicle return centre or authorised dismantling facility.

Volkswagen has already made the corresponding preparations for this: a comprehensive network of vehicle return centres is available in all EU countries and many other countries, where you can hand over your vehicle. If you satisfy the national legal requirements, you can return your end-of-life vehicle free of charge within the EU.

The vehicle return centre issues a recycling certificate which serves as proof that the end-of-life vehicle has been recycled properly.

You can obtain information about vehicle return centres from your authorised Volkswagen repairer.

Scrapping

The relevant safety requirements must be observed when scrapping the vehicle or its individual components, e.g. the airbag system and belt tensioners. These requirements are known to suitably qualified workshops.

Information about vehicles with N1 approval (light commercial vehicle)

Please observe the following for vehicles used to transport goods with a maximum permitted weight of up to 3.5 t (N1 approval in Europe):

Variants and number of seats

There are a number of designs for N1 vehicles based on a Volkswagen passenger car. The number of seats may be restricted to two or four.

Vehicles with two seats: Due to the fact that there is no rear bench seat, there is no floor covering on the floor in the rear of the vehicle interior →⚠.

Vehicles with four seats: The rear bench seat is designed so that the middle seat cannot be used →⚠.

Transporting children safely

As in vehicles with passenger car approval (M1), approved child restraint systems can be used on the seats.

Technical data

Technical data can be found in the vehicle documents.

⚠ WARNING

If no luggage compartment trim is fitted, power cables may be exposed. In the event of damage, this can lead to electric shocks, fire and serious or fatal injuries.

- Ensure the luggage compartment trim is installed upon or before delivery, so that the cables in the rear of the vehicle are covered up when using the vehicle.

⚠ WARNING

If restraint systems such as seat belts and head restraints are missing, this can result in serious or fatal injuries in an accident due to incorrect transport of persons.

- Never drive with a person or child sitting in the middle of the rear bench seat.
- Never transport people in the luggage compartment.
- Observe the safety notes and information regarding the luggage compartment and transporting items.

Declaration of conformity

Placing of manufactured goods on the GB market (England, Wales and Scotland):

UK
CA

The UKCA (UK Conformity Assessed) marking is a new UK product marking that is used for goods being placed on the market in Great Britain (England, Wales and Scotland).

UK Product Safety and Metrology Regulations

This vehicle has various devices installed that are subject to UKCA product regulations. The following acts as the importer of these devices for the United Kingdom market within the meaning of the Product Safety and Metrology Regulations:

Volkswagen Group United Kingdom Ltd.

Yeomans Drive, Blakelands

Milton Keynes, MK 14 5AN

United Kingdom

Simplified EU Declaration of Conformity

Your vehicle is equipped with various radio systems. The manufacturers of these radio systems declare that this equipment complies with Directive 2014/53/EU where required by law.

The complete text of the EU declaration of conformity is available at the following internet address:

www.volkswagen.com/generalinfo

The corresponding legal regulations stipulate that radio equipment with this marking must be collected and disposed of separately from normal household waste. You can hand in these devices at local disposal centres or any nationally authorised return systems *(→ Product recycling)*.

Marking for the restricted use of certain hazardous substances in electrical and electronic equipment in accordance with the RoHS Directive.

Declaration of Conformity for radio systems in EU user states and outside the European Union

Fig. 1 Overview of a selection of approval symbols for radio systems.

1. Argentina.
2. Zambia.
3. Brunei.
4. Philippines.
5. Paraguay.
6. South Africa.

Approval symbol for radio systems in countries outside the EU where radio systems are approved and permitted according to European Directives.

Approval symbol for radio systems in England, Wales and Scotland.

Approval symbol for radio systems in Ukraine.

Approval symbol for radio systems in Brazil.

Approval symbol for radio systems in Argentina.

Approval symbol for radio systems in Malaysia.

Approval symbol for radio systems in Australia or in Australia and New Zealand.

Approval symbol for radio systems in New Zealand.

Approval symbol for radio systems in Russia and in countries where radio systems are approved and permitted according to EAC Directives.

Approval symbol for radio systems in Vietnam.

Approval symbol for radio systems in Belarus.

Approval symbol for radio systems in Serbia.

Approval symbol for radio systems in the USA and countries where radio systems are approved and permitted according to the US FCC Directive.

Approval symbol for radio systems in Mexico.

Approval symbol for radio systems in Mexico.

Approval symbol for radio systems in Armenia.

Approval symbol for radio systems in Mongolia.

Approval symbol for radio systems in Sierra Leone.

Approval symbol for radio systems in Sierra Leone.

Approval symbol for radio systems in Thailand.

Approval symbol for radio systems in the United Arab Emirates.

Approval symbol for radio systems in Ghana.

Approval symbol for radio systems in Pakistan.

Approval symbol for radio systems in Nigeria.

Approval symbol for radio systems in Malawi.

Approval symbol for radio systems in Oman.

Approval symbol for radio systems in Indonesia.

Approval symbol for radio systems in Indonesia.

The manufacturer hereby declares that the following radio systems are in compliance with the basic requirements and other relevant regulations and laws at the time of production of the vehicle:

The following radio systems are not available in every market and are not present in every vehicle.

— Connection to the external aerial.

— Aerial.

— Aerial amplifier.

— Bluetooth.

— Vehicle key.

— Digital instrument cluster

— Infotainment system.

— Wireless charging function

— Keyless Access.

— Instrument cluster, electronic immobiliser.

— Radar sensors for assist systems.

— Tyre pressure sensors.

— Control units with embedded eSIM card.

— Mobile phone interface.

— Wi-Fi®

— Central control unit.

— NFC valet keycard.

— USB charging connector.

Further information at: www.volkswagen.com/generalinfo.

EU-related documents, e.g. for Ghana, can be found on the website under the EU English button.

The corresponding legal regulations stipulate that radio equipment with this marking must be collected and disposed of separately from normal household waste. You can hand in these devices at local disposal centres or any nationally authorised return systems *(→ Product recycling)*.

Marking for the restricted use of certain hazardous substances in electrical and electronic equipment in accordance with the RoHS Directive.

The Radio Equipment Regulations 2017

This vehicle has various radio equipment devices installed. The following acts as importer of the radio equipment devices for the United Kingdom market within the meaning of The Radio Equipment Regulations 2017:

Volkswagen Group United Kingdom Ltd.

Yeomans Drive, Blakelands

Milton Keynes, MK 14 5AN

United Kingdom

Manufacturers' addresses

For components that, due to their size or nature, cannot be provided with the manufacturer’s address, the respective manufacturers’ addresses as required by law are listed here:

Door handle with NFC radio technology

HELLA GmbH & Co. KGaA

Rixbecker Straße 75

59552 Lippstadt

GERMANY

WITTE VELBERT GmbH & Co. KG

Höferstraße 3-15

42551 Velbert

GERMANY

Remote control (auxiliary heater), auxiliary heater (transmitter and receiver unit)

Digades GmbH

Dresdner Straße 16 a

02763 Zittau

GERMANY

Digades GmbH

Äußere Weberstr. 20

02763 Zittau

GERMANY

Webasto Thermo & Comfort SE

Friedrichshafener Straße 9

82205 Gilching

GERMANY

Bury GmbH & Co. KG

Robert-Kochstraße 1-7

32584 Löhne

GERMANY

Tyre pressure sensors

HUF Baolong Electronics Bretten GmbH

Gewerbestraße 40

75015 Bretten

GERMANY

Wireless charging function

Molex Technologies GmbH

Mizarstrasse 3

12529 Schönefeld

GERMANY

Molex CVS Dabendorf GmbH

Märkische Straße 72

15806 Zossen

GERMANY

Bury Sp. Z o.o.

Wojska Polskiego 4

39-300 Mielec

POLAND

BCS Automotive Interface Solutions (Suzhou) Co., Ltd.

No. 2052 Taidong Road Xiangcheng Economic Development District

215413 Suzhou

CHINA

LG Electronics Deutschland GmbH.

Alfred-Herrhausen-Allee 3-5

D-65760 Eschborn

GERMANY

Mapping tables

What the two letters in the tables mean (e.g. AF) *(→ Radio Equipment Directive (RED))*.

Safety

This section contains the certificate numbers of the following components:

— Garage door opener, Keyless Access, vehicle key, digital instrument cluster, electronic immobiliser.

Garage door opener:

ADHL5D, EHL2, CB2JCIBUSHL4	AG
ADHL5D, EHL2, CB2JCIBUSHL4	AK

Keyless Access:

RSB19	AO
Kessy MQB37W	AF
Kessy MQB-A, 5ZA 010 176, MQB-B B, MQB-B H,	AC
013854	AD
VWTOUA PKETOUA	AJ
UWBBLE22, UWBtrx22	BO

Remote control key (vehicle):

VK2, FS19, FS19S, FS191S, FS197, FS19R, FS1903R	AF
FS09, FS12A, FS12P, FS12PM, FS125C, FS14, FS14K, FS14T, FS14TK, FS1744, FS1744M, FS173JR, FS94	AI
VWTOUA RKETOUA	AJ
I22U	BQ

Instrument cluster, electronic immobiliser:

COLOUR5C, MEDIUM 5C, MEDIUM 5C_21	AB
eNSF, LCW05-VWE1, LCW05-VWE5, LCW05-SEE5, EZS-VW-Touareg, Immobilizer integrated in dashboard module instrument cluster, 17101001, 17101002, 17101010, 17101021, 17101022, 17101023, 17101031, 17101032, 17101033, 17101034, 17101041, 17101042, 17101043, 17101051, 17101052, 17101053, 17101054, 17101055, 17101056, 17101057, 17101071, 17101072, 18020501, 18020531, 18020532, 18020533, 18020534, 18031410, 18100931	AC
FPK8 IMMO5D, Instrument cluster 1, Instrument cluster 2, Instrument cluster 3, BNF_HL, BNF_LL, NSF_HL, NSF_LL1, NSF_LL3, FPK8I5DTR2, FPK GEN1, FPK GEN2	AD
MQB_A0 Clusters, MQBG01, MQBM01, MQBS01	BE
DTCO 1381	AT
EFAS-4.10	

Air conditioning

This section contains the certificate numbers of the following components:

— *Remote control (auxiliary heater), auxiliary heater (transmitter and receiver unit).*

Remote control (auxiliary heater):

EasyStart R, Funkfernbedienung, STH VW-50000884, STH VW D-50001194, Telestart	AK

Auxiliary heater (transmitter and receiver unit):

Funkempfänger STH, 50000864 D208L VW, 50001219 D208L VW, MQBclassical, MLBevo	AK

Tyres

This section contains the certificate numbers of the following components:

— *Tyre pressure sensors.*

Tyre pressure sensors:

AG2FW4, TSSRE4Dg, TSSRE4Uf, TSSSG4G5, TSSSG4G5b, TSSTsc, TMSE6A4, A55BT, TSSDA4Pb	AG

Control unit

This section contains the certificate numbers of the following components:

— *Central control unit, door control unit, key card for the Digital Key, wireless charging function, wireless seat belt warning system.*

Central control unit:

5WK50254	AH
BCM MQB37W,BCM MQB37WBL, BR21, BR22, MQB37W, BCM37WBL	AF
KFG: Max, KFG2 Max	BG
BCM2, BCM2R, BCMevo, BCMevoC, BCMevo5	BH
BCM MQB27, BCM PQ25, BCM PQ26 ROW (502N1xFOx), BCM PQ35, BCM PQ37H, BR11, 5WK50248, 5WK50254 MIB2H	XX
BC-Module, 5WK50474	

Door control unit:

HUF71110, HUF71254, DHA20, DHSEQ5NFCNFCTGS, Mobile Key 4K0.959.754.xx, 3G0.837.205, 3G0.837.206	AD
DHSEQ5NFC, NFCTGSAU336, NFCTGS, 4K0.959.754.XX, FLUSHNFC, BUEGELNFC	AE
CDIS 2.0	BD

Wireless charging function:

WCH-183, WCH-185, WCH-186, WCH-304, WPC003-1, WPC003-5, 3G0.980.611, Koppelantenne Gen.3, SCB, DCB, SCB-Lite, WPC039	AA
3G0.980.611, SCB, DCB	BK

Wireless seat belt warning system:

wSBR F-SG, wSBR S-SG	AL

Driver assist systems

This section contains the certificate numbers of the following components:

— *Radar sensors for assist systems.*

Radar sensors for assist systems:

LCA 2.0A, BSD 3.0	AP
RS4	AQ
ARS4-B, ARS410VW63, ARS4-B ARS5-B, FR5CPEC, LRR3, MRR1Plus, LRR4, MRR1Rear, LRR4R, MRRe14FCR, MRRevo14F, R3TR, F5CP42, RS5.3, RS5.5	AR
CPD001	BN
HFA30	BP

Infotainment system and online communication

This section contains the certificate numbers of the following components:

— *Infotainment system, Bluetooth, Wi-Fi hotspot, mobile phone interface, OCU, Volkswagen Car-Net "Security & Service", Volkswagen Car-Net "e-Remote".*

Infotainment system:

New Radio Ultra Low SBB, New Radio Ultra Low SBB DAB, New Radio Ultra Low SBT, 7CO.035.153, 7LA.035.153.A, Radio Ultra Low Touch, Radio Ultra Low Touch DAB	AL
A473/A476/A750, A475/A754, L40VW2, L41VW2, L42VW2, L53VW2, L56VW2, L62VW2, L69VW2, L73VW2, L77VW2, MIB Global Entry/Standard, MIB2, MIB2 PQ MIN, MIB2STD, MIB Standard 2 – PQ +/NAV with BT, MIB Standard 2 – ZR with BT, MIB Standard 2 – ZR +/Nav with BT, MIB3E_MQB_BT, MIB3E_MQB37w_BT, OE-PP 87BT	AL
MIB3TOP, MIB3TOP2, TKCMOD11000, , TKCMOD12C000, TKCMOD11000W, TKCMOD12E00W	AV
MEB ICAS3, MEB ICAS3GP, MEB ICAS3CHNGP	AW
MIB3 OI (LGE)	AX
MIB3 OI, MIB3 OI nf, MIB3 VR-E, MIB3GP, MIB3 EI GP MQBevo, MIB3 EI GP MQBc	AY
MIB Standard 2 – ZR +/Nav mit BT and WLAN, MIB Standard 2 – PQ +/NAV with BT and WLAN, MIB2STD Nav, MIB2STD Radio	AZ
MIB3E_MQB_BTWIFI, MIB3E_MQB37w_BTWIFI	BA
A580/A270	BB
MIB HS, MIB2H	BC
MMI3G	BF
CONBOX-High, CB20CHN08, CONBOX-Low	BM
MMI3G RU	XX
RRVW402B, RRVW401*, RRVW402*	XX

Bluetooth:

HT-5	BI

Wi-Fi hotspot:

HT-5	BI
CCU4	BJ

Mobile phone interface:

HT-5	BI

Online connectivity unit (OCU):

DataPlug	AL
HT-6d, HT-6e, TUVM01IU-G, TUVM02IU-C, TUVM02IU-E, TUVM03IU-C, TUVM03IU-E	AS
TLAHW3IU-E, TLAHW3IU-R, TLVHM3IU-E, TLVHM3IU-R, TLVHW3IU-E, TLVHW3IU-R, TLVLM3IU-E, TLVLM3IU-R, TLVUM3IU-W, TLVUW3IU-W, TLVHE4IU-E, TLVHE4IU-R, TLVHM3IU-W, TLVHW3IU-W, TLVHE4IU-W, TLVUM3IU-E, TLVUM3IU-R, TLVUW3IU-E, TLVUE4IU-E, TLVUE4IU-W, TLVLM3IU-N, TLVHE4IU-N, TLVUM3IU-N, TLVUW3IU-N, TLVHM3IU-N, TLVLP3IU-N, TLAHW3IU-N, TXVLP3IN-N, TLVLM3IU-CR, TLVLM3IU-CM, TLVLM3IU-C, TLAHW3IU-CM, TLAHW3IU-W, TLVHW3IU-N, TLVUW3IU-R, TLVHE4IU-C, TLVUE4IU-N, TLVUM3IU-W-H09-0603, TLVUE4IU-W-H11-0388.	AU
TLVHM3IU-C, TLVHM3IU-CM, TLVHW3IU-CM, TLAHW3IU-CM	AU (China)

Aerials

This section contains the certificate numbers of the following components:

— Aerials, aerial amplifier, connection to the external aerial.

Connection to the external aerial:

LTE-MBC-EU, LTE-MBC-EU2	BC
CM01TN-VWW, CM01XN-VWE, CM02XN-VWE, CM02TN-VWW	AN
UMTS/GSM-MMC, UMTS/GSM-MMC-AG2, UMTS/GSM-MMC-AG3	AS

Aerial amplifier:

CSA-1	AN
DDAECE01, 4N0.035.503.E, 4N0.035.503.F, 4N0.035.503.J, 4N0.035.503.L, 4N0.035.503.M, 4N0.035.503.Q, 4N0.035.503.AB, 4N0.035.503.AC, 4N0.035.503.AF, 4N0.035.503.AG, 4N0.035.503.BP, 4N0.035.503.DC, 4N0.035.503.DG	AL
FAM027, FAM028	BL
0-07-26-1912-00, 756xxxx, AM/FM1/DAB2/TV ECE (Impedance Converter), AM/FM Antenna Base	XX
, 1S0.035.577.A, 2G0.035.577.A, 2GM.035.577.A, 2S0.035.577.A, 1V50933V2C1, 1V50933V1C1, 1V50933V3C1	XX
3G5.035.577, 3G5.035.577.A, 3G5.035.577.B, 3G5.035.577.G, 3G5.035.577.H, 3G5.035.577.J, 3G5.035.577.K, , 3G8.035.577, 3G8.035.577.A, 3G8.035.577.B, 3G8.035.577.E, 3G8.035.577.F, 3G8.035.577.G, 3G8.035.577.H, 3G8.035.577.J, 3G8.035.577.K, 3G9.035.577, 3G9.035.577.A, 3G9.035.577.B, 3G9.035.577.G, 3G9.035.577.H, 3G9.035.577.J, 3G9.035.577.K, 3V5.035.577.A, 3V5.035.577.B, 3V5.035.577.F, 4S0.035.225.A, 4S0.035.225.D, 2G7.035.577.A, 4K0.035.456, 4K0.035.456.B	XX
510.035.577, 510.035.577.A, 510.035.577.B, 565.035.577, 565.035.577.A, 565.035.577.C, 575.035.225, 575.035.225.A, 575.035.225.B, 5C3.035.552, 5C3.035.552.A, 5C3.035.552.B, 5C5.035.552, 5C5.035.552.A, 5C5.035.552.B, 5E6.035.577, 5E6.035.577.A, 5E6.035.577.B, 5E7.035.577, 5E7.035.577.A, 5E7.035.577.B, 5G9.035.577, 5G9.035.577.A, 5G9.035.577.B, 5G9.035.577.G, 5G9.035.577.H, 5G9.035.577.J, 5G9.035.577.K, 5L0.035.501.A, 5L7.035.577.A, 5L7.035.577, 5L7.035.577.B, 5L7.035.577.T, 5N7.035.577.A, 5N7.035.577.E, 5N7.035.577.F, 5N7.035.577, 57L.035.577.S	XX
6C0.035.501, 6C0.035.501.A, 6C0.035.501.C, 6C0.035.501.D, 6C0.035.501.G, 6C0.035.501.J, 6C0.035.501.N, 6C0.035.501.P, 6C0.035.501.Q, 6R0.035.501, 6R0.035.501.A, 6R0.035.501.C, 6R0.035.501.D, 6R0.035.501.F, 6R0.035.501.L, 760.035.577, 760.035.577.A, 760.035.577.S, 760.035.577.T, 7C0.035.501, 7C0.035.501.C, 7C0.035.501.D, 7C0.035.501.F, 7C0.035.501.G, 7H0.035.507.E, 7P6.035.552, 7P6.035.552.A, 7P6.035.552.M, 8S7.035.503.B	XX
920446A, 920554A, 920611A, 920639A, 920627A, 920627B, SAA-101, SAA-102, SAA-103, SAA-104, SAA-105, SAA-106, SAA-107, SAA-108, SAA-109, SAA-110, SAA-111, SAA-112, 5G-NRC-EU, 5G-NRC-CN,5G Compenser,	XX

Aerials:

DSRC CAN Module / EFAS-4 DU (200046-8), DSRC CAN Module / EFAS-4 DU (200046-9)	AM
MQB37W Gen4, 1V50933V1C1, 1V50933V2C1, 1V50933V3C1	XX
RAN-102, RAN-103, RAN-104, RAN-105, RAN-106, RAN-107, RAN-108, RAN-109, RAN-110, RAN-111, RAN-112	XX
, 3789.01, 754xxxx, 76xxxxx, 77xxxxx, 790xxxx, 7540xxx, 7542xxx	XX
1K8.035.552.C, 1K8.035.552.F, 2GC.035.577, 2GC.035.577.A, 2GC.035.577.S	XX
5Q0.035.507.A, 5Q0.035.507.B, 5Q0.035.507.C	XX
6R0.035.501.F	XX

Frequency band, maximum transmission power

If not otherwise stated, the specifications apply to all Volkswagen models or to vehicles that are equipped with the respective radio system.

In certain countries, the activation of, or permission to use, radio technology may be restricted, not possible, or only possible when additional requirements have been fulfilled.

Referenced radio systems (e.g. AA) *(→ Radio Equipment Directive (RED))*.

Frequency band.

Maximum transmission power.

µW = Microwatt, mW = Milliwatt, W = Watt.

AA	105 kHz – 205 kHz	15 W
AB	116 kHz – 134 kHz	148,70 dBµV/m
AC	125 kHz +/- 10 kHz	5,4 dBµA/m
AD	125 kHz	40 dBµA/m
AE	13,56 MHz	500 mW 65.81 dBV/m (PK)
AF	LF 125 kHz	
	UHF 433,05 MHz – 434,79 MHz 433,92 MHz 315 MHz 433,05 MHz – 434,79 MHz	0,1(ERP) mW / -10dBm (ERP) 0,15 mW (EIRP) 0,05(EIRP) mW / -13 dBm (EIRP) 80,8 dBµA/m @ 3m (Ave.)
	UWB 6520 MHz 6988,8 MHz 7040 MHz 7488,0 MHz 7560 MHz	1 mW (EIRP) / 0dBm (EIRP) Mean Power Spec. Dens: -41,3 dBm / MHz (EIRP)
AG	433,92 MHz	10 mW
AH	433,92 MHz, 434,42 MHz	5 dBm EIRP
AI	434,79 MHz	25 mW
AJ	433,47 MHz – 434,37 MHz	-17 dBm
	868,00 MHz – 868,60 MHz	-17 dBm
AK	868,0 MHz – 869,2 MHz	25 mW
AL	2400 MHz – 2483,5 MHz	10 mW
AM	5795 MHz – 5815 MHz (DSRC)	0,04 mW
AN	5855 MHz – 5925 MHz	2 W EIRP
AO	6,0 GHz – 8,5 GHz (6,52 GHz, 7,04 GHz, 7,56 GHz) BLE: 2402-2480 MHz UWB: Ch5: 6489.6 MHz CH6: 6988.8 MHz Ch8: 7488.0 MHz Ch9: 7987.2 MHz	9.9 dBm EIRP -0.75 dBM EIRP
AP	24,05 GHz – 24,25 GHz	0,05 W
AQ	24,075 GHz – 24,250 GHz	15,1 dBm EIRP
AR	76,0 GHz – 77,0 GHz	25 dBm EIRP 0,35 W
AS	GSM 900 (uplink: 880 MHz – 915 MHz / downlink: 925 MHz – 960 MHz)	2 W

	GSM 1800 (uplink: 1710 MHz – 1785 MHz / downlink: 1805 MHz – 1880 MHz)	1 W
	WCDMA FDDI (uplink: 1920 MHz – 1990 MHz / downlink: 2110 MHz – 2170 MHz)	0,25 W
	WCDMA FDDVIII (uplink: 880 MHz – 915 MHz / downlink: 925 MHz – 960 MHz)	0,25 W
AT	5,795 GHz – 5,815 GHz (DSRC) 1599 MHz – 1610 MHz (GNSS)	-19,9 dBm EIRP
AU	WCDMA Band 1: 1922,4 MHz – 1977,6 MHz, WCDMA Band 3: 1712,4 MHz – 1782,6 MHz, WCDMA Band 8: 882,4 MHz – 912,6 MHz	23.5dBm +2.2 / -2.7dB
AU	LTE Band 1: 1920 MHz – 1980 MHz, LTE Band 3: 1710 MHz – 1785 MHz, LTE Band 7: 2500 MHz – 2570 MHz, LTE Band 8: 880 MHz – 915 MHz, LTE Band 20: 832 MHz – 862 MHz, LTE Band 28: 703 MHz – 718 MHz, LTE Band 32: 1452 MHz –1496 MHz	23 dBm ± 2dB
AU	GSM 900: 880 MHz – 915 MHz DCS 1800: 1710 MHz – 1785 MHz GNSS: 1559 MHz –1610 MHz Offline	33 dBm ± 2dB 30 dBm ± 2dB -- --
AU (China)	889-915MHz 1710-1750MHz / 1880-1900MHz 2010-2025MHz/1940-1965MHz 909-915MHz/1880-1915MHz 2300-2370MHz 2575-2635MHz/1920-1965MHz 1710-1780MHz 909-915MHz 824-835MHz	33/30dBm ± 2dB 24dBm +1.7 / -3.7dB 23dBm ± 2.7dB
AV	Bluetooth: 2402 MHz – 2480 MHz	13 dBm
	WLAN 2.4 GHz: 2412 MHz – 2480 MHz	20 dBm
	WLAN 5 GHz: 5725 MHz – 5850 MHz	14dBm
AW	Bluetooth: 2402 MHz – 2480 MHz	6,9 dBm
	WLAN 2.4 GHz: 2412 MHz – 2472 MHz, WLAN 5 GHz: 5150 MHz – 5250 MHz, WLAN 5 GHz: 5725 MHz – 5850 MHz	18,52 dBm
AX	Bluetooth: 2402 MHz – 2480 MHz	2,30 dBm EIRP
	GNSS: 1559 MHz – 1610 MHz	--
	WLAN 2.4 GHz: 2412 MHz – 2472 MHz, WLAN 5 GHz: 5150 MHz – 5250 MHz, WLAN 5 GHz: 5725 MHz – 5850 MHz	16,80 dBm EIRP
AY	Bluetooth: 2402 MHz – 2480 MHz	8,94 dBm EIRP
	WLAN 2.4 GHz: 2412 MHz – 2472 MHz, WLAN 5 GHz: 5745 MHz – 5825 MHz	16,63 dBm EIRP
AZ	Bluetooth: 2402 MHz – 2480 MHz	4,63 dBm EIRP
	WLAN 2.4 GHz: 2412 MHz – 2472 MHz	17,70 dBm EIRP
BA	Bluetooth: 2400 MHz – 2483,5 MHz	4,9 dBm EIRP
	WLAN 2.4 GHz: 2400 MHz – 2483,5 MHz, WLAN 5 GHz: 5150 MHz – 5250 MHz, WLAN 5 GHz: 5725 MHz – 5850 MHz	13,8 dBm EIRP

BB	Bluetooth: 2402 MHz – 2480 MHz	0,9 dBm EIRP
	WLAN: 2400 MHz – 2483,5 MHz	8 dBm EIRP
	GSM: 900/1800 MHz	27 dBm EIRP
	UMTS FDDI/III	24 dBm EIRP
	LTE FDD 3, 7, 8, 20	23 dBm EIRP
BC	Bluetooth: 2402 MHz – 2480 MHz	10 dBm EIRP
	WLAN: 2400 MHz – 2483,5 MHz	20 dBm EIRP
BC	GSM 900 (uplink: 880 MHz – 915 MHz / downlink: 925 MHz – 960 MHz)	33 dBm EIRP
	GSM 1800 (uplink: 1710 MHz – 1785 MHz / downlink: 1805 MHz – 1880 MHz)	30 dBm EIRP
BC	WCDMA FDDI (uplink: 1920 MHz – 1980 MHz / downlink: 2110 MHz – 2170 MHz)	24 dBm EIRP
	WCDMA FDDVIII (uplink: 880 MHz – 915 MHz / downlink: 925 MHz – 960 MHz)	24 dBm EIRP
BC	LTE FDD1 (uplink: 1920 MHz – 1980 MHz / downlink: 2110 MHz – 2170 MHz)	23 dBm EIRP
	LTE FDD3 (uplink: 1710 MHz –1785 MHz / downlink: 1805 MHz – 1880 MHz)	23 dBm EIRP
	LTE FDD7 (uplink: 2500 MHz – 2570 MHz / downlink: 2620 MHz – 2690 MHz)	23 dBm EIRP
	LTE FDD8 (uplink: 880 MHz – 915 MHz / downlink: 925 MHz – 960 MHz)	23 dBm EIRP
	LTE FDD20 (uplink: 832 MHz – 862 MHz / downlink: 791 MHz – 821 MHz)	23 dBm EIRP
BD	LTE Band 1: 2100 MHz, LTE Band 3: 1800 MHz, LTE Band 5: 850 MHz, LTE Band 7: 2600 MHz, LTE Band 8: 900 MHz, LTE Band 20: 800 MHz	23 dBm
BD	UMTS Band 1: 2100 MHz , UMTS Band 2: 1900 MHz, UMTS Band 5: 850 MHz, UMTS Band 8: 900 MHz	24 dBm
BD	GSM: 850 MHz, E-GSM: 900 MHz	33 dBm
	DCS: 1800 MHz, PCS: 1900 MHz	30 dBm
	BLE: 2400 MHz – 2483,5 MHz	3,5 dBm
	WCDMA FDDI (uplink: 1920 MHz – 1980 MHz / downlink: 2110 MHz – 2170 MHz)	30 dBm
BE	125 kHz	0,56 W
BF	Bluetooth: 2400 MHz – 2483,5 MHz	20 dBm
	GSM/GPRS: 880,2 MHz –914,8 MHz	33 dBm
	GSM/GPRS: 1710,2 MHz –1784,8 MHz	30 dBm
	WCDMA Band 1: 1922,4 MHz – 1977,6 MHz, WCDMA Band 8: 882,4 MHz – 912,6 MHz	24 dBm
BG	Bluetooth: 2400 MHz – 2483,5 MHz	4 dBm EIRP
	WLAN: 2400 MHz – 2483,5 MHz	19 dBm EIRP
BH	21,13 kHz – 22,75 kHz	42 dBµA/m
BI	GSM 850 (uplink: 824 MHz – 849 MHz / downlink: 869 MHz – 894 MHz)	2 W
	GSM 900 (uplink: 880 MHz – 915 MHz / downlink: 925 MHz – 960 MHz)	2 W
	GSM 1800 (uplink: 1710 MHz – 1785 MHz / downlink: 1805 MHz – 1880 MHz)	1 W
	GSM 1900 (uplink: 1850 MHz – 1910 MHz / downlink: 1930 MHz – 1990 MHz)	1 W
	WCDMA FDDI (uplink: 1920 MHz – 1980 MHz / downlink: 2110 MHz – 2170 MHz)	0,25 W
	WCDMA FDDV (uplink: 824 MHz – 849 MHz / downlink: 869 MHz – 894 MHz)	0,25 W

	Bluetooth: 2402 MHz – 2480 MHz	0,001 W
	WLAN: 2412 MHz – 2462 MHz	0,1 W
BJ	WiFi IEEE 802.11 b/g/n: 2412 MHz – 2472 MHz	18,4 dBm EIRP
	GSM/GPRS/eGPRS 900: 880,2 MHz – 914,8 MHz	37,64 dBm EIRP
	GSM/GPRS/eGPRS 1800: 1710,2 MHz – 1784,8 MHz	34,64 dBm EIRP
	UMTS FDDI: 1922,4 MHz – 1977,6 MHz, UMTS FDDVIII: 882,4 MHz – 912,6 MHz, LTE FDD1: 1920 MHz – 1980 MHz, LTE FDD3: 1710 MHz – 1784,9 MHz, LTE FDD7: 2500 MHz – 2569,9 MHz, LTE FDD8: 880 MHz – 914,9 MHz, LTE FDD20: 832 MHz – 861,9 MHz	27,84 dBm EIRP
BK	13,56 MHz	500 mW
BL	5855 MHz – 5925 MHz	24 dBm EIRP
BM	Bluetooth: 2402 MHz – 2480 MHz	9,7 dBm EIRP
	Bluetooth LE: 2402 MHz – 2480 MHz	-1,5 dBm EIRP
	WLAN: 2412 MHz – 2472 MHz	13,3 dBm EIRP 12,7 dBm EIRP 33 dBm rated 30 dBm rated 23 dBm rated 24 dBm rated
	WLAN: 5745 MHz – 5825 MHz	12,7 dBm EIRP
	GSM 900: 880 MHz – 960 MHz	33 dBm rated
	GSM 1800: 1710 MHz – 1880 MHz	30 dBm rated
	LTE FDD Band 1, 3, 7, 8, 20, 28, 34, 38, 40	23 dBm rated
	WCDMA Band I: 1920 MHz – 1980 MHz, 2110 MHz – 2170 MHz, WCDMA Band III: 1710 MHz – 1880 MHz, WCDMA Band VIII: 880 MHz – 960 MHz	24 dBm rated
BN	60 - 63,2 GHz	6 dBm (3.98 mW)
BO	6,0 GHz – 8,0 GHz)	-30 dBm
	2402 - 2483.5 MHz	-30 dBm
BP	24.2 GHz	20 dBm EIRP (Peak)
BQ	6.000 - 8.500 MHz	-57,73dBm
	433,47 - 434,37 MHz	5248 - 7328 µV/m
XX	No transmission, only reception.	

Approval numbers

Additional entries are also available at the following internet address:

www.volkswagen.com/generalinfo

Argentina

C-17908, H-21901, H-21902, C-22292, H-26251, H-27278, C-26978, C-22036, H-27598, H-27726, H-22390, H-22391, H-22794, H-22793, C-15806, C-15807, H-22757, H-27976, C-23301, C-23466, H-23129, H-27923, H-15700, H-22961, C-23301, C-23466, H-24102, H-16681, H-24262, H-24260, C-28016, H-24258, H-24470, H-24469, H-24442, H-28829, H-28830, H-24261, H-25893, H-27977, H-29401, H-17568, H-24892, H-17563, H-17567, H-17562, C-25101, C-25102, H-12804, H-21050, H-24931, H-20030, H-28774, H-28773, H-21050, C-21673, C-21672, H-28773, C-25803, H-25531, C-17604, C-30067, H-30374, H-28912, H-27594, H-29168, H-29314, H-29107, H-26251, H-21901 H-30781, H-21902, H-21797, H-21798, H-25533, H-25097, C-17908, C-27899, H-21796, H-21624, C-26724, C-22292, H-22192, H-22363, H-22364, H-22191, H-22362, C-22394, H-27278, C-22181

Benin

AGREE PAR L'ARCEP BENIN

Numéro d'agrément_Date d'agrément:

016/ARCEP/SE/DJPC/DR/GU/2021, 018/ARCEP/SE/DR/DAJRC/GU/2019, , 069/ARCEP/SE/DR/DAJRC/GU/2019, 073/ARCEP/SE/DR/DAJRC/GU/2019, 074/ARCEP/SE/DR/DAJRC/GU/2019, 075/ARCEP/SE/DAR/DJPC/GU/2020, 114/ARCEP/SE/DR/DAJRC/GU/2017, 115/ARCEP/SE/DR/DAJRC/GU/2017, 115/ARCEP/SE/DR/DAJRC/GU/2019, 121/ARCEP/SE/DR/DAJRC/GU/2019, 123/ARCEP/SE/DR/DAJRC/GU/2018, 124/ARCEP/SE/DR/DAJRC/GU/2018, 124/ARCEP/SE/DR/DAJRC/GU/2019, 133/ARCEP/SE/DR/DAJRC/GU/2018, 137/ARCEP/SE/DR/DAJRC/GU/2019, 138/ARCEP/SE/DR/DAJRC/GU/2019, 143/ARCEP/SE/DR/DAJRC/GU/2018, 165/ARCEP/SE/DR/DAJRC/GU/2018, 166/ARCEP/SE/DR/DAJRC/GU/2018, 167/ARCEP/SE/DR/DAJRC/GU/2018, 171/ARCEP/SE/DJPC/DAR/GU/2020, 173/ARCEP/SE/DR/DAJRC/GU/2018, 175/ARCEP/SE/DR/DAJRC/GU/2018, 176/ARCEP/SE/DR/DAJRC/GU/2018, 177/ARCEP/SE/DR/DAJRC/GU/2018, 179/ARCEP/SE/DR/DAJRC/GU/2018, 209/ARCEP/SE/DR/DAJRC/GU/2019, 211/ARCEP/SE/DR/DAJRC/GU/2019, 213/ARCEP/SE/DR/DAJRC/GU/2018, 216/ARCEP/SE/DR/DAJRC/GU/2018, 316/ARCEP/SE/DJPC/DAR/GU/2020,065/ARCEP/SE/DJPC/DAR/GU/2021,016/ARCEP/SE/DJPC/DAR/GU/2021

2018-149/ARCEP/PT/DAJRC/GU, 2018-150/ARCEP/PT/DAJRC/GU, 2020-274/ARCEP/PT/SE/DAF/DJPC/DAR/GU, 2021-069/ARCEP/PT/SE/DAF/DJPC/DAR/GU, 2021-097/ARCEP/PT/SE/DJPC/DAR/GU, 2022-019/ARCEP/PT/DAJRC/GU, 2022-286/ARCEP/PT/DAJRC/GU, 2022-287/ARCEP/PT/DAJRC/GU, 2023-034/ARCEP/PT/DJPC/DAR/DCT/GU, 2023-075/ARCEP/SE/DJPC/DAR/DCT/GU, 2023-072/ARCEP/SE/DJPC/DAR/DCT/GU, 2023-088/ARCEP/SE/DJPC/DAR/DCT/GU, 2023-118/ARCEP/SE/DJPC/DAR/DCT/GU, 2023-137/ARCEP/SE/DAR/DCT/GU, 2023-176/ARCEP/SE/DAR/DCT/GU, 2023-180/ARCEP/SE/DAR/DCT/GU, 2023-183/ARCEP/SE/DAR/DCT/GU, 2023-181/ARCEP/SE/DAR/DCT/GU, 2023-182/ARCEP/SE/DAR/DCT/GU, 2023-184/ARCEP/SE/DAR/DCT/GU, 2023-345/ARCEP/SE/DAR/DCT/GU, 2023-250/ARCEP/SE/DAR/DAR/GU, 2023-072/ARCEP/SE/DJPC/DAR/GU, 2023-283/ARCEP/SE/DAR/GU, 2023-281/ARCEP/SE/DAR/GU, 2023-284/ARCEP/SE/DAR/GU, 2023-271/ARCEP/SE/DAR/GU, 2024-231, 2024-40, 2024-52, 2023-317 , 2024-282, 2024-118, 2024-117

Brazil

Para maiores informações, consulte o site da ANATEL - www.anatel.gov.br.

00716-15-03745, 00850-13-03745, , 0939-14-2856, 0940-14-2856, 00231-20-09215, 00716-15-03745, 00720-19-05364, 00939-19-06673, 01094-17-03226, 01095-17-03226, 01138-12-02856, 01140-12-02856, 01202-15-06815, 01618-20-02149, 01760-20-02149, 01812-19-05364, 01813-19-05364, 01814-19-05364, 01834-18-02856, 02018-18-04557, 02144-17-03430, 02294-15-03616, 02318-12-02856, 02393-19-05364, 02450-17-02010, 02452-17-02010, 02992-14-06673, 03764-17-05386, 03833-18-06353, 03834-18-06353, 03993-19-10188, 04057-14-06068, 04282-19-01925, 04383-18-06673, 04708-15-05364, 04998-19-02405, 04999-19-02405, 05273-18-02496, 05292-18-06353, 05293-18-06353, 05296-18-06353, 05297-18-06353, 05310-19-10188, 05505-18-06353, 05506-18-06353, 05507-18-06353, 05508-18-06353, 05509-18-06353, 05511-18-06353, 05512-18-06353, 05531-16-02149, 05674-16-06830, 05676-19-01925, 05803-21-03745, 06029-18-05364, 06215-16-03430, 06763-18-06353, 06950-18-10457, 06962-18-06353, 07084-18-03745, 07137-19-08137, 07183-18-06353, 07184-18-06353, 07185-18-06353, 07186-18-06353, 07188-18-06353, 07189-18-06353, 07191-18-06353, 07830-17-08001, 08057-19-05179, 09036-19-01925, 09087-19-07978, 09275-19-06353, 10313-20-06353, 12001-20-10944, 13806-20-09215, 00533-22-03745, 05310-19-10188, 11718-22-05364, 11502-22-05364, 05507-18-06353, 11718-22-05364, 11502-22-05364, 01812-19-05364, Versys2293_17/07/2025, Versys2259_21/03/2025, Versys2442_22/02/2025, Versys2890_15/12/2024, Versys2989_01/08/2025, Versys4241_27/12/2024, Versys3022_14/10/2025, Versys3889_13/08/2026, Versys4627_17/06/2026, Versys2181_05/10/2026, Versys4570_01/07/2026, Versys4016_11/05/2025

0148-15-7978, 0263-16-9946, 0278-15-7978, 0456-15-9946, 0646-13-5452, 0716-15-3745, 0850-13-3745, 0918-14-5364, 1140-14-2856, 1202-14-6815, 1497-14-9946, 1498-14-9946, 1546-10-2886, 1690-15-5364, 1711-12-5364, 2115-15-6815, 2220-14-3745, 2230-14-3745, 2294-15-3616, 2483-14-6324, 3002-09-3745, 3080-14-6828, 3557-15-5364, 4057-14-6068, 02128-16-05364, 02530-16-09946, 03323-18-02930, 05531-16-02149, 05674-15-06830, 05674-16-06830, 07084-18-03745, 00278-15-07978, 05676-19-01925, 14707-21-01925, 08795-23-01925, 08004-23-09215, 11743-23-07978 UL-BR 17.0958, MT-6294/2022_17/01/2025, MT-6412/2023_12/04/2025, MT-6452/2023_14/06/2025, MT-6401/2023_12/04/2025, NCC10909/14, NCC10809/14, DEKRA-00025-22, DKTEL-00198-23_05/02/2025, UL-BR 23.0140_03/07/2025, UL-BR 23.1314_08/09/2025, UL-BR 23.1378_27/11/2025 UL-BR23.1707_04/12/2025, BRC-24.2893_14/10/2026, MT-

3003/2014_22/08/2026, BRC-23.1869_22/06/2025, 20117-23-10187_07/02/2026, UL-BR 24.0099_07/02/2026, CPQD11808_19/04/2026, 05213-24-03798_10/05/2026, MT-6842/2024_31/07/2026, MT-6870/2024_15/07/2026, 07084-18-03745_05/10/2026, MT-6869/2024_15/07/2026, 05602-24-10457_02/07/2026, MT-6828/2024_05/06/2026, 01711-12-05364_23/07/2026, 07183-18-06353_09/10/2026, MT-6077/2022_13/09/2026, 01711-12-05364_23/07/2026, NCC 26498/24_13/02/2026, NCC 26499/24_10/02/2026, Versys 2574_06/09/2026, MT-6924/2024_25/07/2026, MT-6270/2022_20/12/2026, MT-6272/2022_20/12/2026, CPQD 9730_21/12/2026, MT-3900/2016_06/12/2026, MT-6123/2022_26/10/2026, MT-6109/2022_04/02/2027, Versys 4241_28/12/2026, MT-6294/2023_17/01/2027, DEKRA-00198-23_05/02/2027, MT-5192/2021_12/02/2027, MT-6246/2022_12/04/2027, MT-6341/2023_02/04/2027, MT-6401/2023_12/04/2027, 00278-15-07978_05/02/2027, 04057-14-06068_11/02/2027, Versys 2227_19/03/2027, NCC 26993/24_09/02/2027, 00574-25-07978_30/01/2027, Versys 2442_22/02/2027, .

Este equipamento não tem direito à proteção contra interferência prejudicial e não pode causar interferência em sistemas devidamente autorizados. Para maiores informações, consulte o site da ANATEL- www.anatel.gov.br

Este equipamento opera em caráter secundário, isto é, não tem direito à proteção contra interferência prejudicial, mesmo de estações do mesmo tipo, e não pode causar interferência a sistemas operando em caráter primário. Para maiores informações, consulte o site da ANATEL- www.anatel.gov.br

10530-23-04457, 10531-23-04457, 10532-23-04457, 10537-23-04457, 10538-23-04457, 03131-24-04457, 00526-24-12217, 01898-24-12217, 01901-24-12217, 15772-23-12217, 15786-23-12217, 20316-23-15296

England, Wales and Scotland

Further information on radio systems and EU declarations of conformity can be found at www.volkswagen.com/generalinfo.

Countries that certify radio systems based on EU directives:

Further information on radio systems and EU declarations of conformity can be found at www.volkswagen.com/generalinfo.

Gabon

D'HOMOLOGATION D'EQUIPEMENTS DE TELECOMMUNICATIONS

CERTIFICAT No:

033/ARCEP/2021, , 070/ARCEP/2021, , 419/ARCEP/2021, 421/ARCEP/2021, , , 1016/ARCEP/2021, , 1365/ARCEP/2021, 699/ARCEP/2021, 203/ARCEP/2022, 044/ARCEP/2022, 112/ARCEP/2022, 096/ARCEP/2022, 264/ARCEP/2022, 263/ARCEP/2022, 320/ARCEP/2022,319/ARCEP/2022,531/ARCEP/2022,542/ARCEP/2022,535/ARCEP/2023,540/ARCEP/2022, 95/ARCEP/2022, 604/ARCEP/2022, 602/ARCEP/2022, 601/ARCEP/2022, 600/ARCEP/2022, 618/ARCEP/2022, 642/ARCEP/2022, 641/ARCEP/2022, 640/ARCEP/2022, 790/ARCEP/2022, 890/ARCEP/2022, 892/ARCEP/2022, 891/ARCEP/2022, 1031/ARCEP/2022, 95/ARCEP/2023, 103/ARCEP/2023, 239/ARCEP/2023, 446/ARCEP/2023, 581/ARCEP/2023, 105/ARCEP/2023, 104/ARCEP/2023, 966/ARCEP/2023, 1005/ARCEP/2023, 1002/ARCEP/2023, 65/ARCEP/2024, 74/ARCEP/2024, 76/ARCEP/2024, 145/ARCEP/2024, 143/ARCEP/2024, 144/ARCEP/2024, 290/ARCEP/2024, 625/ARCEP/2024, 632/ARCEP/2024, 631/ARCEP/2024, 629/ARCEP/2024, 628/ARCEP/2024, 633/ARCEP/2024, 866/ARCEP/2024, 1096ARCEP/2024, 1097/ARCEP/2024, 1500/ARCEP/2024, 1286/ARCEP/2024, 1432/ARCEP/2024, 1287/ARCEP/2024, 1498/ARCEP/2024, 1510/ARCEP/2024, 1511/ARCEP/2024, 1550/ARCEP/2024, 1606/ARCEP/2024, 15/ARCEP/2025, 17/ARCEP/2025, 11/ARCEP/2025

Ghana

NCA Appoved: XXX-XX-XXX-XXX

BRE-1M-GE2-15A, BR3-1M-GE2-X72, BR3-1M-GE2-X69, BR3-1M-GE2-080, BR3-1M-GE2-087, BR3-1M-GE2-088, BR3-1M-GE2-089, BR3-1M-GE2-09E, BR3-1M-GE2-0AF, BR3-1M-GE2-0BA, BR3-1M-GE2-0BB, BR3-1M-GE2-0BC, BR3-1M-GE2-0B0, BR3-1M-GE2-0B3, BR3-1M-GE2-0B4, BR3-1M-GE2-0B7, BR3-1M-GE2-0B8, BR3-1M-GE2-0D2, BR3-1M-GE2-0BA, BR3-1M-GE2-0BC, BR3-1M-GE2-0EC, BR3-1M-GE2-0ED, BR3-1M-GE2-0EE, BR3-1M-GE2-10A, BR3-1M-GE2-10B, BR3-1M-GE2-15A, BR3-1M-GE2-130, EX6-6M-GE2-17B, ORG-4H-7E3-X98, SRO-1M-7E4-2A9, SRO-1M-7EA-24B, SRO-1M-7E4-25D, SRO-1M-7E4-243, SRO-1M-7E4-244, SRO-1M-7E4-246, ZRO-M8-7E3-11B, ZRO-M8-7E3-19A, ZRO-M8-7E3-19C, ZRO-M8-7E3-X26, ZRO-M8-7E3-X43, ZRO-M8-7E3-X73, ZRO-M8-7E3-X75, ZRO-M8-7E3-X90, ZRO-M8-7E3-X92, ZRO-M8-7E3-X96, ZRO-M8-7E3-11B, ZR0-M8-7E3-20B, ZRO-M8-7E3-209, ZRO-M8-7E3-229, ZRO-M8-7E3-27B, ZRO-1H-7E3-14E, ZRO-1H-7E3-150, 1R3-1M-7E1-0B7, 1R3-1M-7E1-09B, 1R3-1M-7E1-09C, 1R3-1M-7E1-160, 2R9-1H-7E0-xAC, 2R9-1H-7E0-X71, 2R9-1H-7E0-X75, 2R9-1H-7EO-X90, 2R9-1H-7E0-0DA, 3R2-1M-7DF-287, 3R2-1M-7DF-288, 3R8-8M-7DF-2AA, 6X6-4H-7EO-OF3, 7E5-7M-X0B-RDR, 7E5-7M-X24-RDR, 7E5-7M-X43-RDR, 7E5-7M-X47-RDR, 7E5-7M-X74-RDR, 7T6-5H-7DF-17F, 7T6-5H-7DF-182,7E5-7M-101-RDR,7E5-7M-156-RDR,7E6-M1-X36-SRD,7E6-M1-XDC-SRD,7E6-M1-X0F-SRD, 7E6-M1-X92-SRD, 7E6-M1-XDC-SRD, 7E6-M1-X0F-SRD, 7E6-M1-216-SRD, 7E6-SH-215-SRD, 7E6-M1-12D-SRD, 7M-7E7-X93-DSR, 7M-7E7-X48-DSR, 7E6-M1-12E-SRD, 7E6-M1-12C-SRD, 7M-7E7-XE7-DSR, 7M-7E7-XA8-DSR, 7E5-7M-151-RDR, 7§6-M1-155-SRD, HS-7E7-X2B-DSR, 7E5-7M-101-RDR, HS-7E7-X2B-DSR, IH-7E8-X65-TIH, HS-7E7-173-DSR, 7M-7E7-XF0-DSR, 7M-7E7-109-DSR, 7M-7E7-XE3-DSR, 7M-7E7-XR1-DSR, 1R3-1M-7E1-160.

Israel

MoC:

11-12320, 51-07681, 51-10011, 51-10360, 51-10361, 51-37428, 51-41889, 51-42830, 51-42841, 51-43949, 51-46980, 51-47851, 51-54730, 51-55347, 51-57375, 51-63653, 51-64296, 51-65008, 51-65009, 51-65839, 51-65860, 51-65909, 51-65953, 51-66171, 51-66172, 51-66173, 51-66259, 51-66383, 51-66390, 51-66415, 51-66601, 51-66602, 51-69416, 51-69417, 51-70460, 51-70461, 51-71498, 51-71601, 51-73078, 51-73720, 51-74243, 51-74291, 51-74339, 51-74361, 51-74441, 51-74442, 51-74443, 51-74356, 51-74537, 51-74636, 51-74989, 51-75000, 51-75054, 51-74632, 51-74633, 51-74634, 51-74635, 51-74636, 51-74896, 51-74989, 51-75000, 51-75054, 51-75515, 51-76029, 51-76422, 51-76971, 51-77001, 51-77882, 51-80024, 51-81786, 51-81807, 51-82314, 55-02626, 55-06864, 55-06893, 55-06894, 55-07102, 55-07460, 55-07477, 55-07480, 55-07680, 55-07681, 55-07789, 55-08250, 55-08456, 55-08739, 55-08803, 55-09135, 55-09396, 55-09600, 55-09601, 55-09617, 55-09618, 55-09683, 55-10011, 55-10360, 55-10361, 55-10614, 55-11599, 63-63304, 63-66687, 63-67691, 63-67736,63-67180, 63-73362, 63-67180, 63-73361, 63-71587,11-12330,63-70375, 51-90346, 55-13788, 55-13787, 55-13785, 55-13789, 55-13786, 55-13903, 55-13946, 55-13947, 55-13949, 55-13947, 55-13951, 55-14175, 55-14172, 55-14187, 55-14188, 51-87213, 55-14395, 55-14410, 55-14409, 51-888032, 55-14866, 55-14888, 51-88306, 51-88548, 51-88870, 51-89881, 11-11252, 51-89766, 51-89882, 51-89883, 55-15760, 55-15761, 51-91118, 51-91119, 51-91460, 51-88548, 55-12193, 55-12326, 55-10408, 51-91756, 51-92318, 51-92728, 55-16701, 51-93926, 51-93201, 51-93487, 51-95837, 51-95140, 51-96151, 51-96511, 51-96450, 51-96575, 51-96572, 51-96573, 51-96570, 51-96571, 51-96574, 51-97056, 55-17931, 51-97313, 51-97311, 51-97312, 51-97316, 51-97641, 51-97647, 51-97644, 51-88746, 51-88751, 51-96151, 51-91527; 11-11252, 51-99873, 51-99874, 51-99051, 51-97822, 51-97824, 55-13403, 56-02588, 56-02269 , HCTIMP_SI62368.42656, HCTIMP_SI62368.42673, LT-0083880B, LT-0066086, 51-95205, 51-95207, 56-03326, 56-03771, 56-04442, 56-04676, 56-04677, 56-05232, 56-05342, 56-05341, 56-05340, 56-05458, 56-05909, 56-05984, 56-06240, 56-06239, 56-06691, 56-02588, 56-02972, 51-3973255, 56-09348, 56-09421, 56-09104, 51-77099, 56-09584, 56-09643, 56-10032, 56-10108, 56-10063, 56-10968,56-10969, 10-17958, 56-10063, 10-17958, 56-11192, 56-11193, 11-11252, 56-11644, 56-08706, 51-99160, 56-01890, 51-97823, 56-00201, 56-00597, 56-02024, 56-91527, 56-11432, 56-11080

הוראות בטיחות

1. להתקנה על ידי אנשי שירות מוסמכים בלבד.

2. אין לבצע שינויים כלשהם במוצר זה. לשינויים אלו יכולה להיות השפעה שלילית על ביצועי המוצר, בטיחותו ועמידותו ובנוסף, יש בהם כדי לחרוג מתנאי האחריות.

חל איסור לבצע פעולות במכשיר שיש בהן כדי לשנות את תכונותיו האלחוטיות של המכשיר , ובכלל זה שינויי תוכנה , החלפת אנטנה מקורי ת או הוספת אפשרות לחיבור לאנטנה חיצונית , בלא קבל ת אישור משרד התקשורת , בש ל החשש להפרעות אלחוטיות .

אסור להחליף את האנטנה המקורית של המכשיר ולא לעשות בו כל שינוי טכני אחר.

Jamaica

This product contains a Type Approved Module by Jamaica:

SMA Equipment Identifier:

FR5CUEC, RS5.3, MQBS01, TSSRE4Uf, TSSSG4G5b, WPC003-1, Medium 5C_21, TSSRE4Td, FPK8 IMMO5D, CB2JCIBUSHL4, LTE-MBC-NAR2, TLVHM3IU-W, LTE-MBC-NAR2, LTE-MBC-NARTSSSG4G4, TSSTSc, TLAHW3IU-W, FS14T and FS14TK, WCH-186, WCH-185, WCH-183, 17101031, CONBOX-HIGH, MQB3 OI, MEDIUM 5C & COLOUR 5C, 17101023, 17101022, 17101032, 17101043, 17101041, 18020534, ARS5-B, 18020534, TSSRE4A, VK2, VW MIB2 Entry, MIB GLOBAL STANDARD PLUS, RS4, 18020534, 5WK50257/254/252/250/248/40398036/40406557/4038279, FS94, FS09,VW India 2.0 Low Radio,VW MIB Regio,F5CP42, MQBS01, WPC003-5, BCM37WBL,WPC003-1, MQBS01, BR22, FPK8I5DTR2, TLVUM3IU-W, TLVUW3IU-W, FS19S, FS191S, TLVUW3IU-W, TLVUM3IU-W, WCH-304, UWBtrx22, UWBBLE22, SCB, MIB3 OI, MIB3 OI VR-E, MIB3GP, HFA30, MIB3 EI GP MQBevo, TKCMOD11000W, WPC003-1

Jordan

TRC no.:

TRC/LPD/2010/91, **TRC/LPD/2014/9**, **TRC/LPD/2014/186**, **TRC/LPD/2014/214**, **TRC/LPD/2014/241**, **TRC/LPD/2014/248**, **TRC/LPD/2014/258**, **TRC/LPD/2014/274**, **TRC/LPD/2015/387**, **TRC/LPD/2016/170**, **TRC/LPD/2016/215**, **TRC/LPD/2016/216**, **TRC/LPD/2016/252**, **TRC/LPD/2016/353**, **TRC/LPD/2016/478**, **TRC/LPD/2016/538**, **TRC/LPD/2016/584**, **TRC/LPD/2016/591**, **TRC/LPD/2017/63**, **TRC/LPD/2017/254**, **TRC/LPD/2018/1**, **TRC/LPD/2018/128**, **TRC/LPD/2018/162**, **TRC/LPD/2018/193**, **TRC/LPD/2018/228**, **TRC/LPD/2018/272**, **TRC/LPD/2018/274**, **TRC/LPD/2018/381**, **TRC/LPD/2018/399**, **TRC/LPD/2018/489**, **TRC/LPD/2018/528**, **TRC/LPD/2018/529**, **TRC/LPD/2019/67**, **TRC/LPD/2019/152**, **TRC/LPD/2019/153**, **TRC/LPD/2019/155**, **TRC/LPD/2019/227**, **TRC/LPD/2019/233**, **TRC/LPD/2019/234**, **TRC/LPD/2021/215**, **TRC/36/9257/2021**.

TRC/SS/2010/48, **TRC/SS/2014/127**, **TRC/SS/2015/221**, **TRC/SS/2015/222**, **TRC/SS/2016/476**, **TRC/SS/2019/212**, **TRC/31/7615/2020**, **TRC/31/5862/2022**, **TRC/32/6684/2023**, **TRC/31/11434/2023**, **TRC/31/11517/2023**, **TRC/34/6696/2023**, **TRC/31/11516/2023**, **TRC/31/9121/2021**, **TRC/34/12409/2023**, **TRC/36/7651/2022**, **TRC/31/712/2020**, **TRC/34/13027/2023**, **TRC/32/7603/2020**, **TRC/32/7604/2020**, **TRC/34/10235/2022**, **TRC/34/9541/2022**, **TRC/34/9710/2022**, **TRC/34/14044/2024**, **TRC/35/1922/2024**, **TRC/34/13799/2024**, **TRC/34/13604/2024**, **TRC/34/11842/2023**, **TRC/34/11841/2023**, **TRC/34/12409/2023**, **TRC/34/8847/2024**, **TRC/34/15439/2024**.

TRC No.: T/4/11/11/... , **0354**, **1200**, **2394**, , , **2950**, **3338**, **3339**, **3474**, **3502**, **3506**, **3512**, **3641**, **3680**, **3681**, , **4215**, **4350**, **4352**, **4387**, **4549**, **4554**, **4555**, **5616**, **5621**, **5649**, **5653**, **5896**, **5898**, **5974**, **5976**, **5977**, **6082**, **6435**, **7192**, **7216**, **7218**, **7716**, **7777**, **8007**, **8163**, **8164**, **8205**, **8225**, **8226**, **8227**, **8230**, **8278**, **8281**, , **8677**, **8680**, **8793**, **8910**, **9184**, **9229**, **9236**, **9351**, **9352**, **9585**, **9851**, **10124**, **10354**, **10488**, **10752**, **10753**, **11026**, **11078**, **12260**,**194200**,**1199**,**2950**,**3512**,4215,**5397**,**5739**,**8102**,**9215**,**9217**,**932**,**2517**,**2612**,**2609**,**2608**, **258**, **382**, **9177**, **9343**, **976**, **1142**, **1417**, **1626**, **1748**, **2498**, **2855**, **2854**, **2912**, **3097**, **3196**, **3248**, **3391**, **3392**, **3658**, **3731**, **4537**, **3820**, **4099**, **4087**, **4100**, **4423**, **4422**, **4586**, **5159**, **5200**, **4099**, **5318**, **5365**, **5874**, **5872**, **5875**, **7103**, **7042**, **7068**, **7067**, **7045**, **7710**, **7814**, **11932**, **4257**, **1857**, **1088**, **5687**

.

Cameroon

AGENCE DE REGULATION DES TELECOMMUNICATIONS CAMEROUN

HOMOLOGATION D'EQUIPEMENT:

106/ART/DG/DT/SDNSEA/SNH/CA, **125/ART/DG/DT/SDNSEA/SNH/CA**, **137/ART/DG/DT/SDNA/SNH/CA1**, **139/ART/DG/DT/SDNA/SNH/CA1**, **152/ART/DG/DT/SDNA/SNH/CA2**, **167/ART/DG/DT/SDNA/SNH/CA3**, **170/ART/DG/DT/SDNA/SNH/CA2**, **172/ART/DG/DT/SDNA/SNH/CA2**, **271/ART/DG/DT/SDNA/SNH/CA2**, **273/ART/DG/DT/SDNA/SNH/CA2**, **287/ART/DG/DT/SDNA/SNH/CA2**, **293/ART/DG/DT/SDNA/SNH**, **301/ART/DG/DT/SDNSEA/SNH/CA**, **305/ART/DG/DT/SDNA/SNH/CA1**, **309/ART/DG/DT/SDNA/SNH/CA1**, **318/ART/DG/DT/SDNA/SNH/CA1**, **428/ART/DG/DT/SDNA/SNH/CA1**, **458/ART/DG/DT/SDNSEA/SNH**, **459/ART/DG/DT/SDNSEA/SNH**, **465/ART/DG/DT/SDNA/SNH**, **469/ART/DG/DT/SDNA/SNH/CA2**, **475/ART/DG/DT/SDNA/SNH/CA2**, **581/ART/DG/DT/SDNA/SNH/CA2**, **616/ART/DG/DT/SDNA/SNH/CA2**, **628/ART/DG/DT/SDNA/SNH/CA1**, **631/ART/DG/DT/SDNA/SNH/CA1**, **720/ART/DG/DT/SDNA/SNH/CA2**, **722/ART/DG/DT/SDNA/SNH/CA2**, **726/ART/DG/DT/SDNA/SNH/CA2**, **734/ART/DG/DT/SDNA/SNH/CA2**, **778/ART/DG/DT/SDNA/SNH/CA1**, **788/ART/DG/DT/SDNSEA/SNH/CA**, **851/ART/DG/DT/SDNA/SNH/CA2**, **856/ART/DG/DT/SDNA/SNH/CA2**, **870/ART/DG/DT/SDNA/SNH/CA2**, **1129/ART/DG/DT/SDNSEA/SNH/CA**, **1151/ART/DG/DT/SDNSEA/SNH**, **1789/ART/DG/DT/SDNA/SNH**, **1150/ART/DG/DT/SDNSEA/SNH**, **1152/ART/DG/DT/SDNSEA/SNH**, **135/ART/DG/DT/SDNSEA/SNH**, **289/ART/DG/DT/SDNSEA/SNH**,**295/ART/DG/DT/SDNSEA/SNH**, **492/ART/DG/DT/SDNSEA/SNH**, **655/ART/DG/DT/SDNSEA/SNH**, **656/ART/DG/DT/SDNSEA/SNH**, **663/ART/DG/DT/SDNSEA/SNH**, **2784/ART/DG/DT/SDNSEA/SNH**, **834/ART/DG/DT/SDNSEA/SNH**, **837/ART/DG/DT/SDNSEA/SNH**, **941/ART/DG/DT/SDNSEA/SNH**, **36/ART/DG/DT/SDNSEA/SNH**, **79/ART/DG/DT/SDNSEA/SNH**, **78/ART/DG/DT/SDN/SEA/SNH**, **333/ART/DG/DT/SDN/SEA/SNH/CA**, **442/ART/DG/DT/SDN/SEA/SNH/CA**, **113/ART/DG/DT/SDN/SEA/SNH/CA**, **111/ART/DG/DT/SDN/SEA/SNH/CA**, **653/ART/DG/DT/SDNSEA/SNH**, **974/ART/DG/DT/SDNSEA/SNH**, **58/ART/DG/DT/SDNSEA/SNH**, **856/ART/DG/DT/SDNSEA/SNH/CA**, **131/ART/DG/DT/SDNSEA/SNH/CA**, **263/ART/DG/DT/SDNSEA/SNH/CA**, **549/ART/DG/DT/SDNA/SNH**, **545/ART/DG/DT/SDNA/SNH**, **665/ART/DG/DT/SDNSEA/SNH**, **469/ART/DG/DT/SDNSEA/SNH/CA**, **791/ART/DG/DT/SDNSEA/SNH**, **931/ART/DG/DT/SDNSEA/SNH**, **923/ART/DG/DT/SDNSEA/SNH**, **925/ART/DG/DT/SDNSEA/SNH**

Malawi

MACRA

Type approval number:

MLW/MACRA/TA/11/2021/01173, MLW/MACRA/TA/11/2021/01174, MLW/MACRA/TA/02/2022/01227, MLW/MACRA/TA/03/2022/01242, MLW/MACRA/TA/03/2022/01243, MLW/MACRA/TA/08/2022/01311, MLW/MACRA/TA/02/2023/01414, MLW/MACRA/TA/06/2023/01460, MLW/MACRA/TA/07/2023/01462, MLW/MACRA/TA/07/2023/01465, MLW/MACRA/TA/09/2023/01509, MLW/MACRA/TA/10/2023/01526, MLW/MACRA/TA/2024/01579

Malaysia

CIDF15000490, CIDF15000578, CIDF17000143, MRR14F, ARS4-B, MIB3 OI

RAAT/44A/0219/S(19-0487), RAAU/05C/0415/S(14-3022), RAAU/33C/1015/S(15-0535), RAAU/35C/1115/S(15-0536), RAAU/40C/1215/S(15-4937), RAAU/48C/0716/S(16-2025), RAAU/57A/0111/S(10-2112), RAAY/84A/0618/S(18-2241), RAAY/85A/0618/S(18-2242), RAAY/86A/0618/S(18-2378), RAAY/87A/0718/S(18-2596), RAAY/92A/1218/S(18-4731), RAAY/98A/0620/S(20-2103), RAFC/18A/0618/S(18-2470), RALM/22A/0315/S(15-0480), RALM/35A/0716/S(16-2324), RALM/43B/0221/S(21-0619), RALM/66A/0618/S(18-2468), RALM/67A/0618/S(18-2474), RALM/68A/0618/S(18-2473), RALM/69A/1018/S(18-3829), RALM/77A/0219/S(19-0174), RANI/26C/1215/S(15-4798, , , RANI/72B/0215/S(14-3024), RBEF/04A/0317/S(17-0584), RBEF/30A/0919/S(19-3760), RCCT/61D/0719/S(19-2714), , , RDDC/72A/0518/S(18-1697), RDDK/02B/0419/S(19-1401), RDDK/08A/0416/S(16-1233), RDDK/08B/0416/S(16-1233), RDDK/17A/0816/S(16-2023), RDDK/22A/1016/S(16-3306), , RDDK/68A/0418/S(18-1521), RDDK/69B/1220/S(20-5452), RDDS/27A/0319/S(19-1029), RDFX/09A/0821/S(21-4059), RDFX/10A/0921/S(21-4061), RDFX/11A/0921/S(21-4060), RFCL/09A/0218/S(18-0609), RFCL/13A/0618/S(18-2379), RFCL/14A/0618/S(18-2543), RFCL/15A/0718/S(18-2544), RFCL/18A/0718/S(18-2529), RFCL/19A/0718/S(18-2545), RFCL/20A/0718/S(18-2718), RFCL/21A/0718/S(18-2717), RCFL/22A/0818/S(18-3109), RFCL/23A/0818/S(18-3153), RCFL/24A/0818/S(18-3152), RFCL/26A/0918/S(18-3810), RFCL/27A/0918/S(18-3812), RFCL/28A/1018/S(18-3977), RFCL/30A/1018/S(18-4129), RFCL/31A/1018/S(18-3976), RFCL/33A/0619/S(19-2422), RFCL/34A/0619/S(19-2421), RFCL/35A/0719/S(19-2874), RFCL/41A/0220/S(20-0390), RFCL/42A/0220/S(20-0391), RFCL/44A/0320/S(20-1385), RFCP/36A/0321/S(21-1381), RFGF/05A/0519/S(19-2090), RGBZ/01A/0318/S(18-0918), RGBZ/03A/0320/S(20-1253), RGEZ/25A/0920/S(20-3544), RGEZ/31A/0421/S(21-1529), RGEZ/36A/0521/S(21-2216), RGIG/01A/0220/S(20-0593), RGIG/02A/0220/S(20-0591), RGLA/06A/1220/S(20-5384), RGNU/03A/0221/S(21-0560),RCCT/02G/1021/S(21-4512),RAQP/73A/1121/S(21-5209),RAQP/76A/1121/S(21-5310),RAQP/75A/1121/S(21-5309),RRCCT/19G/1121/S(21-4614),RFGF/05A/0519/S(19-2090),RALM/77A/0219/S(19-0174),RALM/54B/1221/S(21-5945),RALM/34A/0616/S(16-0899),RGLN/26A/0122/S(22-0336),RAQP/77A/0222/S(22-0908),RGEZ/45A/0322/S(22-1385),RAVG/39U/0616/S(16-1865),RCCT/46B/0317/S(17-0740),RCCT/47B/0317/S(17-0739),RCCT/64B/0517/S(17-0741), RAAU/40C/1215/S(15-4937),RAAU/57A/0111/S(10-2112), RAVG/39U/0616/S(16-1865), RDDK/23A/0916/S(16-3288), RAQP/84A/0822/S(22-3841), RBEF/30A/0919/S(19-3760), RAQP/84A/0922/S(22-4095), RAQP/88A/1022/S(22-4485), RALM/75B/1122/S(22-5510), RALM/74B/1122/S(22-5508), RALM/22A/0315/S(15-0480), RAQP/84A/0223/S(23-0548), RGLA/06A/1220/S(20-5384), RGIH/67A/0522/S(22-2480), RALM/90B/0323/S(23-0831), RALM/89B/0323/S(23-0830), RALM/90B/0323/S(23-0831), RFCP/23A/0323/S(23-1490), RALM/44A/0517/S(17-1383) RGLN/01A/0620/S(20-2413), RALM/20B/0820/S(20-3382), RALM/21B/0820/S(20-3381), RGLN/46A/0523/S(23-2144), RFCL/83A/0623/S(23-2566), RFCL/84A/0623/S(23-2507), RFCL/85A/0623/S(23-2508), RFCL/86A/0623/S(23-2693), RFCL/94A/0623/S(23-2789), RFCL/87A/0623/S(23-2595), RFCL/88A/0623/S(23-2694), RFCL/89A/0623/S(23-2684), RFCL/94A/0623/S(23-2789), RFCL/95A/0623/S(23-2791), RFCL/91A/0623/S(23-2786), RFCL/92A/0623/S(23-25787), RFCL/93A/0623/S(23-2788), RFCL/04C/0623/S(23-2911), RFCL/97A/0723/S(23-3079), RFCL/96A/0723/S(23-3078), RFCL/99A/0723/S(23-3077), RFCL/98A/0723/S(23-3076), RALM/33B/1120/S(20-4706), RAQP/07B/0823/S(23-3721), RAQP/06B/0823/S(23-3720), RDDK/75C/0223/S(23-0474), RDDK/74C/0223/S(23-0472), RGGY/20A/1222/S(22-5600), RGGL/38A/1023/S(23-4773), RGGK/39A/1023/S(23-4774), RGGK/40A/1023/S(23-4775), RGSC/06A/0723/S(23-3045), RGSC/07A/0723/S(23-3046), RFFK/06A/0522/S(22-2423), RGWQ/32A/0324/S(24-0892), RDDK/68A/0418/S(18-1521), RFBY/29A/0524/S(24-2032), RFBY/30A/0524/S(24-2033), RFBY/32A/0624/S(24-2578), RDDK/83A/1018/S(18-4152), RDDK/83A/1018/S(18-4153), RGEZ/72A/0824/S(24-3502), RDDK/62D/1024/S(24-4684), RAQP/75A/1121/S(21-5309), RFCP/45B/0225/S(25-0632) .

Morocco

AGREE PAR L'ANRT MAROC

Numéro d'agrément_Date d'agrément

MR 5371ANRT2010_05.12.2019, MR 5611ANRT2010_27.05.2010, MR 5835ANRT2010_28.08.2020, MR 7906ANRT2013_06.03.2013, MR 9102ANRT2014_14.03.2014, MR 9107ANRT2014_18.03.2014, MR 9126ANRT2014_27.02.2024, MR 9186ANRT2014_04.04.2024, MR 9668ANRT2014_30.09.2014, MR 9741ANRT2014_24.10.2014, MR 9778ANRT2014_08.08.2024, MR 9904ANRT2014_13.11.2024, MR 9918ANRT2014_22.12.2014, MR 11030ANRT2015_04.11.2015, MR 11264ANRT2016_08.01.2016, MR 11554ANRT2016_15.03.2016, MR 12089ANRT2016_15.06.2016, MR 12123ANRT2016_22.06.2016, MR 12372ANRT2016_16.08.2016, MR 12623ANRT2016_11.10.2016, MR 12755ANRT2016_07.11.2016, MR 12756ANRT2016_07.11.2016, MR 12901ANRT2016_30.11.2016, MR 13217ANRT2017_27.01.2017, MR 13255ANRT2017_09.02.2017, MR 13576ANRT2017_20.03.2017, MR 13772ANRT2017_13.04.2017, MR 13774ANRT2017_13.04.2017, MR 13851ANRT2017_03.05.2017, MR 13892ANRT2017_03.05.2017, MR 13900ANRT2017_04.05.2017, MR 14830ANRT2017_28.09.2017, MR 15171ANRT2017_22.11.2017, MR 15669ANRT2018_31.01.2018, MR 15674ANRT2018_31.01.2018, MR 15675ANRT2018_31.01.2018, MR 15925ANRT2018_27.02.2018, MR 16263ANRT2018_06.04.2018, MR 16606ANRT2018_17.05.2018, MR 16657ANRT2018_23.05.2018, MR 16726ANRT2018_30.05.2018, MR 16794ANRT2018_05.06.2018, MR 16860ANRT2018_18.06.2018, MR 16861ANRT2018_18.06.2018, MR 16905ANRT2018_21.06.2018, MR 16906ANRT2018_21.06.2018, MR 16907ANRT2018_21.06.2018, MR 16908ANRT2018_21.06.2018, MR 17015ANRT2018_03.07.2018, MR 17016ANRT2018_03.07.2018, MR 17079ANRT2018_11.07.2018, MR 17080ANRT2018_11.07.2018, MR 17201ANRT2018_06.08.2018, MR 17202ANRT2018_06.08.2018, MR 17203ANRT2018_06.08.2018, MR 17204ANRT2018_06.08.2018, MR 17504ANRT2018_14.09.2018, MR 17505ANRT2018_14.09.2018, MR 17528ANRT2018_20.09.2018, MR 17576ANRT2018_26.09.2018, MR 17678ANRT2018_11.10.2018, MR 17679ANRT2018_11.10.2018, MR 18103ANRT2018_30.11.2018, MR 18334ANRT2018_21.12.2018, MR 18335ANRT2018_21.12.2018, MR 18615ANRT2019_21.01.2019, MR 18736ANRT2019_04.02.2019, MR 18928ANRT2019_25.02.2019, MR 19106ANRT2019_14.03.2019, MR 19108ANRT2019_14.03.2019, MR 19315ANRT2019_04.04.2019, MR 19338ANRT2019_09.04.2019, MR 19339ANRT2019_09.04.2019, MR 19505ANRT2019_22.04.2019, MR 19520ANRT2019_23.04.2019, MR 19767ANRT2019_15.05.2019, MR 19768ANRT2019_15.05.2019, MR 19769ANRT2019_15.05.2019, MR 20859ANRT2019_11.09.2019, MR 20901ANRT2019_13.09.2019, MR 20902ANRT2019_13.09.2019, MR 20944ANRT2019_19.09.2019, MR 21472ANRT2019_26.11.2019, MR 21473ANRT2019_28.11.2019, MR 21807ANRT2019_23.12.2019, MR 22495ANRT2020_26.02.2020, MR 23231ANRT2020_26.05.2020, MR 23405ANRT2020_16.03.2020, MR 24001ANRT2020_13.05.2020, MR 24106ANRT2020_20.05.2020, MR 25982ANRT2020_14.10.2020, MR 26081ANRT2020_22.10.2020, MR 26333ANRT2020_12.11.2020, MR 27808ANRT2021_13.03.2021, MR 30377ANRT2021_14.10.2021, MR 31268ANRT2022_04.01.2022,MR 29628ANRT2021_02.08.2021,MR 30406ANRT2021_24.10.2021,MR 30494ANRT2021_28.10.2021 MR 33226ANRT2022_01.06.2022, MR 30377ANRT2021_14.10.2021, MR 30377ANRT2021_26.10.2022, MR 8106ANRT2013_26.10.2022, MR 9186ANRT2014_26.10.2022, MR 9668ANRT2014_26.10.2022, MR 11264ANRT2016_27.10.2022, MR 17528ANRT2018_27.10.2022, MR 9126ANRT2014_27.10.2022, MR 35384ANRT2022_21.11.2022, MR 35382ANRT2022_21.11.2022, MR 35387ANRT2022_21.11.2022, MR 35393ANRT2022_21.11.2022, MR 36711ANRT2023_10.02.2023, MR 25982ANRT2020_14.10.2020, MR 31772ANRT2020_17.02.2022, MR 35739ANRT2022_12.12.2022, MR 36711ANRT2020_10.02.2023, MR 31772ANRT2020_03.04.2023, MR 37224ANRT2023_23.06.2023, MR 31774ANRT2017_10.08.2023, MR 12122ANRT2016_10.08.2023, MR 12123ANRT2016_10.08.2023, MR 35351ANRT2022_17.11.2022, MR 35350ANRT2022_17.11.2022, MR 37357ANRT2023_17.03.2023, MR 37442ANRT2023_22.03.2023, MR 39161ANRT2023_13.07.2023, MR 490ANRT2024_05.02.2024, MR 1286ANRT2024_29.03.2024, MR 2040ANRT2024_17.05.2024,

.

Mauritania

AGREE PAR L'ARE MAURITANIE

Numéro d'agrément_Date d'agrément:

, **0598/ARE/2018_13.12.2018**, **0630/ARE/2019_25.02.2019**, **0647/ARE/2019_30.04.2019**, **0649/ARE/2019_30.04.2019**, **0650/ARE/2019_30.04.2019**, **0664/ARE/2019_27.05.2019**, **0665/ARE/2019_27.05.2019**, **0667/ARE/2019_27.05.2019**, **0712/ARE/2018_04.11.2019**, **0713/ARE/2018_04.11.2019**, **0742/ARE/2020_20.01.2020**, **0796/ARE/2020_11.05.2020**, **0839/ARE/2020_21.09.2020**, **0840/ARE/2020_21.09.2020**, **0874/ARE/2020_26.11.2020**, **0971/ARE/2021_20.07.2021**, **0979/ARE/2021_09.08.2021**, **1128/ARE/2021_27.06.2022**, **1127/ARE/2021_27.06.2022**, **1173/ARE/2022_17.10.2022**, **1120/ARE/2022_24.05.2022**, **232/ARE/2023_13.02.2023**, **1212/ARE/2022_22.12.2022**, **1251/ARE/2023_16.03.2023**, **1252/ARE/2023_20.03.2023**, **1263/ARE/2023_17.04.2023**, **1267/ARE/2023_17.05.2023**, **1269/ARE/2023_17.05.2023**, **1270/ARE/2023_17.05.2023**, **1296/ARE/2023_13.06.2023**, **1297/ARE/2023_13.06.2023**, **1303/ARE/2023_03.07.2023**, **1306/ARE/2023_03.07.2023**, **1304/ARE/2023_03.07.2023**, **1303/ARE/2023_03.07.2023**, **1305/ARE/2023_03.07.2023**, **1218/ARE/2023_02.02.2023**, **1219/ARE/2023_02.02.2023**, **1329/ARE/2023_22.08.2023**, **1334/ARE/2023_04.09.2023**, **1332/ARE/2023_04.09.2023**, **1356/ARE/2023_02.10.2023**, **1408/ARE/2024_23.01.2024**, **1439/ARE/2024_27.03.2024**

Mexico

NYCE: , **NYC-CEDT1456-21**, , **NYC-CEDT0106-23**, **NYC-CEDT2073-23**, **NYC-2402CT0118-24**, **NYC-2402CT0204-24**, **NYC-2402CT0207-24**, **NYC-2402CT0305-24**, **NYC-CEDT0587-24**, **NYC-CEDT0621-24**, **NYC-CEDT0634-24**, **NYC-CEDT1118-24**, **NYC-CEDT1119-24**, **NYC-CEDT1782-24**, **NYC-2402C0E19421**, **NYC-2402C0E20218**, **NYC-2402C0E20285**, **NYC-CEDT0327-25**

ANCE:**ANC2101C00017489**,**ANC2201C00003403**,**ANC2201C00004471**

IFETEL:

IFT/223/UCS/DG-AUSE/0311/2018, **IFT-008-2015**, **IFT/223/UCS/DG-AUSE/10559/2021**, **IFT/223/UCS/DG-AUSE/9797/2021**, **IFT/223/UCS/DG-AUSE/9793/2021**, **IFT/223/UCS/DG-AUSE/9791/2021**, **IFT/223/UCS/DG-AUSE/9792/2021**, **IFT/223/UCS/DG-AUSE/9796/2021**, **IFT/223/UCS/DG-AUSE/9788/2021**, **IFT/223/UCS/DG-AUSE/0029/2021**, **IFT/223/UCS/DG-AUSE/7577/2020**, **IFT/223/UCS/DG-AUSE/6918/2022**, **IFT/223/UCS/DG-AUSE/6915/2022**, **IFT/223/UCS/DG-AUSE/1911/2022**, **IFT/223/UCS/DG-AUSE2294/2022**, **IFT/223/UCS/DG-AUSE/2516/2022**, **IFT/223/UCS/DG-AUSE/1766/2022**, **IFT/223/UCS/DG-AUSE/3659/2022**, **IFT/223/UCS/DG-AUSE/3672/2022**, **IFT/223/UCS/DG-AUSE/4769/2022**, **IFT/223/UCS/DG-AUSE/1540/2022**, **IFT/223/UCS/DG-AUSE/3129/2022**, **IFT/223/UCS/DG-AUSE/4898/2022**, **IFT/223/UCS/DG-AUSE/4897/2022**, **IFT/223/UCS/DG-AUSE/4551/2022**, **IFT/223/UCS/DG-AUSE/xxxx/2022**, , **IFT/223/UCS/1365/2023**, **IFT/223/UCS/1940/2023**, **IFT/223/UCS/2740/2023**, **IFT/223/UCS/3554/2023**, **IFT/223/UCS/3942/2023**, **IFT/223/UCS/3950/2023**, **IFT/223/UCS/1175/2023**, **IFT/223/UCS/1174/2023**, **IFT/223/UCS/DG-AUSE/7603/2020**, **IFT/223/UCS/DG-AUSE/2408/2021**, **IFT/223/UCS/7549/2023**, **IFT/223/UCS/8987/2024**, **IFT/223/UCS/9014/2024**, **IFT/223/UCS/9501/2024**

RCPVIVW21-4222, **RCPAPR318-2005**, **RCPBOBR21-0911**, **RCPBOFR18-1885**, **RCPBOLR09-0828**, **RCPBOLR16-0518**, **RCPBOMR12-1538**, **RCPBOMR14-0766**, **RCPBOMR14-0922**, **RCPBOMR17-0598**, **RCPBOMQ19-0594**, **RCPCOAR18-1800**, **RCPGEAD16-1700**, **RCPHAMM10-0514**, **RCPHEBS14-0180**, **RCPHEBC18-2099**, **RCPHEFS19-1702**, **RCPHEFS20-1469**, **RCPHERS19-1678**, **RCPGEAD16-1700**, **RCPGECB14-0464**, **RCPLGLG16-0952**, **RCPLGMI19-1163**, **RCPVIVW20-0478**, **RCPVOHT13-1485**, **RCPVOMI15-0115**, **RCPVWFS16-0693**, **RCPVWL414-0775**, **RCPVWL414-0775-A1**, **RCPVWL617-0023**, **RCPVWMI17-0707**, **RCPVWMI17-0902**, **RCPVWMI18-2151**, **RCPVWMI18-2169**, **RCPVWMI14-0755**, **RCPVWMI14-1819**, **RCPVWMI14-1819**, **RCPVWMI14-1820**, **RCPVWMI15-0640**, **NYC-2002C0E22330**, **RCPVWMI16-0590**, **RCPVWMI16-1445**, **RCPVWMM17-1053**, **RCPVWVW17-0714**, **RCPVWVW17-0714-A1**, **RLVBHTS19-1995**, **RLVBOLR14-1873**, **RLVCO1820-0821**, **RLVCOAR15-0008**, **RLVCOBC16-1823**, **RLVCO1820-0821**, **RLVCOFS18-2029**, **RLVCOFS18-2030**, **RLVDER316-1666**, **RLVDER316-2005**, **RLVHE0119-0720**, **RLVHEBC15-0293**, **RLVHEBC16-0682**, **RLVHEFS13-1688**, **RLVHEFS13-1690**, **RLVHEFS14-1515**, **RLVHEFS18-1288**, **RLVHEFS18-1565**, **RLVHEFS19-0647**, **RLVHEFS19-1298**, **RLVHEFS20-0533**, **RLVHEFS20-1335**, **RLVHEFS20-1336**, **RLVHEFS20-1420**, **RLVHELC11-1185**, **RLVHEMQ19-1757**, **RLVHEMQ19-1758**, **RLVHEMW19-1757**, **RLVHERS17-0286**, **RLVHUHU19-1065**, **RLVHUTS20-1781**, **RLVMABN18-1512**, **RLVMABN18-1512-A1**, **RLVMAMQ18-0363**, **RLVMAMQ20-2464**, **RLVVENB20-1419**, **RLVVICO19-1023**, **RLVVIFP20-1412**, **RLVVIKO18-0155**, **RLVVIME19-1022**, **RLVVIME19-1023**, **RLVVIME20-2934**, **RLVVWFS17-2122**, **RLVVWFS17-2122-A1**, **RLVVW1718-1092**, **RLVVW1718-1169**, **RLVVW1718-1170**, **RLVVW1718-1171**, **RLVVW1718-1314**, **RLVVW1718-1315**, **RLVVW1718-1316**, **RLVVW1718-1317**, **RLVVW1718-1507**, **RLVVW1718-1508**, **RLVVW1718-1509**, **RLVVW1718-1517**, **RLVVW1718-1518**, **RLVVW1718-1519**, **RLVVW1718-1567**, **RLVVW1718-1568**, **RLVVW1718-1789**, **RLVVW1718-1790**, **RLVVW1718-1928**, **RLVVW1718-1929**, **RLVVW1719-1795**, **RLVVW1818-1248**, **RLVVW1818-1249**, **RLVVW1818-1258**, **RLVVW1819-0009**, **RLVVW1819-0023**, **RTIAUCB18-0153**, **RTIAUMI14-1863**, **RTILECO19-1805**, **RTILECO21-2443**, **RTILGTL19-0483**, **RTILGTL19-1617**, **RTILGTL20-727**, **RTIMOLT20-1047**, **RTIVWCO19-1185**,**RCPVWMI22-1384**,**RLVMAMQ22-3409**, **VOVWMI23-13062**, **VOVWMI23-13050**, **RCPVWMI22-1384**, **VOVWTK23-30067**, **VOVWCP23-19309**, **SYMOWC23-01151**, **ROVIHF24-02919**, **ULM-NOM-16943**, **VOAPMI24-05677**, **VOVWMI24-05362**, **VOVWMI24-05354**, **VOJOMI24-09641**, **VOJOMI24-10742**, **TEHUFL24-14072**, **TEHUFL24-14071**, **RLVCOAR15-0008**, **VOHUNF24-22616-0008**.

La operación de este equipo está sujeta a las siguientes dos condiciones:

— (1) es posible que este equipo o dispositivo no cause interferencia perjudicial y

— (2) este equipo o dispositivo debe aceptar cualquier interferencia, incluyendo la que pueda causar su operación no deseada.

Nigeria

Connection and use of this communications equipment is permitted by the Nigerian Communications Commission.

NCC/TSNi/WN/TA/CERT/: **0043/2011**, **0679/2015**, **0884/2015**, **0922/2015**, **0923/2015**, **0947/2016**, **1071/2016**, **1247/2016**, **1454/2017**, **1567/2017**, **1571/2017**, **1650/2017**, **1691/2017**, **1692/2017**, **2061/2018**, **2062/2018**, **2236/2018**, **2332/2018**, **2333/2018**, **2334/2018**, **2335/2018**, **2338/2018**, **2339/2018**, **2340/2018**, **2383/2018**, **2384/2018**, **2385/2018**, **2427/2018**, **2466/2018**, **2467/2018**, **2525/2018**, **2838/2019**, **2862/2019**, **2935/2019**, **2951/2019**, **3137/2019**, **3138/2019**, **3223/2019**, **3224/2019**, **3401/2020**, **3492/2020**, **3493/2020**, **3738/2020**, **3948/2020**, **3983/2020**, **3989/2020**, **4019/2021**, **4176/2021**, **4218/2021**, **4683/2021**,**4231/2021**,**4660/2021**,**4658/2021**,**4682/2021**,**01798/2022**,**01878/2022**,**01985/2022**, **4683/2021**, **3948/2020**, **02000/2022**, **00047/2023**, **00320/2023**

NCC/TSNi/TA/VOL: **161/2021/124**

NCC/TSNi/TA/CERT: **435/2022**, **00186/2023**

NCC/CERT: **2356/2022**, **00561/2023**, **00088/2023**, **0519/2023**, **004558/2024**, **00297/2024**, **04458/2024**

Oman

TRA/TA-R/7145/19_D172338, **TRA/TA-R/7240/19_D100428**, **TRA/TA-R/7244/19_D100428**, **TRA/TA-R/7383/19_D100428**, **TRA/TA-R/7384/19_D100428**, **TRA/TA-R/7481/19_D172338**, **TRA/TA-R/7524/19_D100428**, **TRA/TA-R/7604/19_D100428**, **TRA/TA-R/7704/19_D090024**, **TRA/TA-R/7752/19_D090024**, **TRA/TA-R/7867/19_D192564**, **TRA/TA-R/7871/19_D192564**, **TRA/TA-R/8052/19_D090024**, **TRA/TA-R/8056/19_D090024**, **TRA/TA-R/8084/19_D192564**, **TRA/TA-R/8150/19_D172338**, **TRA/TA-R/8158/19_D172338**, **TRA/TA-R/8171/19_D100428**, **TRA/TA-R/8240/19_D172338**, **TRA/TA-R/8480/19_D192564**, **TRA/TA-R/8649/19_D090024**, **TRA/TA-R/8749/19_D172338**, **TRA/TA-R/9347/20_D172338**, **TRA/TA-R/9664/20_D172338**, **TRA/TA-R/9675/20_D192564**, **TRA/TA-R/9676/20_D192564**, **TRA/TA-R/9682/20_D100428**, **TRA/TA/R/10209/20_D172249**, **TRA/TA-R/10345/20_D090024**, **TRA/TA-R/10363/20_D100428**, **TRA/TA-R/11110/21_D172338**, **TRA/TA-R/11179/21_D172249**,**TRA/TA-R/10614/20_D172249**,**TRA/TA-R/11980/21_D172338**,**TRA/TA-R/12440/21_D172338**,**TRA/TA-R/12742/21_D090258**,**TRA/TA-R/12743/21_D090258**,**TRA/TA-R/13040/22_D172338**, **TRA/TA-R/11110/21_D172338**, **TRA/TA-R/13697/22_D100428**, **TRA/TA-R/14975/23_D100428**, **TRA/TA-R/14722/22_D202897**, **TRA/TA/6945/2014_17/09/2014**, **TRA/TA-R/15114/23_D172338**, **TRA/TA-R/13211/22_D172338**, **TRA/TA-R/15008/23_D172338**, **TRA/TA-R/13781/23_D100428**, **TRA/TA-R/15396/23_D090024**, **TRA/TA-R/12904/21_D213125**, **TRA/TA-R/12905/21_D213125**, **TRA/TA-R/16919/23_D202897**, **TRA/TA-R/16056/23_D100428**, **TRA/TA-R/15420/23_D172338**, **TRA/TA-R/16441/23_D172338**, **TRA/TA-R/16526/23_D172338**, **TRA/TA-R/16919/23_D202897**, **TRA/TA-R/17712/24_D172338**, **TRA/TA-R/18257/23_D100428**, **TRA/TA-R/20763/2025_1230080**, **TRA/TA-R/20490/2024_TA125161**, **TRA/TA-R/19043/24_TA123021**, **TRA/TA-R/19006/24_TA123023**, **TRA/TA-R/19209/2024_TA1233347**, **TRA/TA-R/19227/2024_TA123373**, **TRA/TA-R/19223/2024_TA123367**, **TRA/TA-R/19206/2024_TA123344**, **TRA/TA-R/19547/2024_TA123804**, **TRA/TA-R/19557/2024_TA123816**, **TRA/TA-R/19575/2024_TA123835**, **TRA/TA-R/19005/2024_TA123022**, **TRA/TA-R/19678/2024_TA123983**, **TRA/TA-R/19008/2024_TA123025**, **TRA/TA-R/19970/2024_TA124409**, **TRA/TA-R/19990/2024_TA124436**, **TRA/TA-R/20646/2024_TA125372**, **TRA/TA-R/20490/2024_TA125161**, **TRA/TA-R/20654/2024_TA125384**, **TRA/TA-R/20644/2024_TA125370**, **TRA/TA-R/20492/2024_TA125163**, **TRA/TA-R/20763/2024_TA125525**, **TRA/TA-R/21203/2025_TA126089**, **TRA/TA-R/19674/2024_D172338** .

Philippines

NTC, Type Approved No.:

ESD-1105427C, ESD-1105633C, ESD-1206775C, ESD-1308271C, ESD-1408668C, ESD-1408747C, ESD-1408917C, ESD-1409834C, ESD-1409181C, ESD-1409770C, ESD-1510139C, ESD-1510297C, ESD-1510396C, ESD-1510397C, ESD-1511095C, ESD-1612168C, ESD-1612188C, ESD-1613057C, ESD-1613431C, ESD-1613454C, ESD-1714358C, ESD-1714837C, ESD-1714838C, ESD-1714839C, ESD-1715123C, ESD-1716172C, ESD-1816403C, ESD-1816404C, ESD-1816419C, ESD-1816997C, ESD-1817283C, ESD-1817335C, ESD-1817369C, ESD-1817501C, ESD-1817548C, ESD-1817853C, ESD-1817897C, ESD-1817898C, ESD-1817899C, ESD-1817900C, ESD-1818098C, ESD-1818419C, ESD-1918733C, ESD-1918734C, ESD-1918735C, ESD-1918843C, ESD-1918844C, ESD-1919228C, ESD-1919230C, ESD-1919232C, ESD-1919296C, ESD-1919297C, ESD-1919418C, ESD-1919559C, ESD-1919739C, ESD-1919803C, ESD-1919804C, ESD-1919996C, ESD-1920171C, ESD-1920172C, ESD-1920173C, ESD-1920174C, ESD-1920175C, ESD-1920724C, ESD-1920725C, ESD-1919739C, ESD-1920803C, ESD-2021903C, ESD-2021997C, ESD-2021998C

ESD-CPE-1817719C, ESD-CPE-1920803, ESD-CPE-2003542, ESD-CPE-2003561, ESD-CPE-2103674, ESD-GEC-1402882, ESD-RCE-2022725, ESD-RCE-2023283, ESD-RCE-2024041, ESD-RCE-2024379, ESD-RCE-2125478,ESD-CPE-2103674,ESD-RCE-21257185,ESD-RCE-2127184,ESD-RCE-2127226,ESD-RCE-2128032,ESD-RCE-2228946, ESD-RCE-2024041, ESD-RCE-2229380, ESD-RCE-2230291, ESD-RCE-2332287, ESD-RCE-2333421, ESD-RCE-2334226, ESD-RCE-2334225, ESD-RCE-2231728, ESD-RCE-2231727, ESD-RCE-2334235, ESD-CPE-2043960, ESD-RCE-2231777, ESD-RCE-2231753, ESD-RCE-2436027, ESD-RCE-2437626, ESD-RCE-2436849

Rwanda

RURA/1010402/2019/L123_23.10.2019, RURA/1010402/2019/L128_21.10.2019, RURA/1010402/2020/L1069, RURA/1010402/2020/L1705_20.05.2020, RURA/101042/2020/L6997_24.09.2020,

RURA/ICT/AUT/200140090_17.11.2020, RURA/ICT/AUT/200140122_17.11.2020, RURA/ICT/AUT/210165696_10.06.2021, RURA/ICT/AUT/210172215_21.07.2021, RURA/ICT/AUT/210172964_30.07.2021, RURA/ICT/AUT/210178685_30.08.2021, RURA/ICT/AUT/210190642_22.10.2021,RURA/ICT/AUT/210148185_31.01.2021,RURA/ICT/AUT/210149593_18.02.2021,RURA/ICT/AU RURA/ICT/AUT/220264765_05.10.2022, RURA/ICT/AUT/220270155_28.10.2022, RURA/ICT/AUT/220272401_14.11.2022, RURA/ICT/AUT/220273457_15.11.2022, RURA/ICT/AUT/220275518_22.11.2022, RURA/ICT/AUT/220280879_19.12.2022, RURA/ICT/AUT/230211868_10.05.2023, RURA/ICT/AUT/220271948_09.11.2022, RURA/ICT/AUT/220271951_09.11.2022, RURA/ICT/AUT/230311868_10.05.2023, RURA/ICT/AUT/230343093_27.09.2023, RURA/ICT/AUT/2403771708_28.02.2024, RURA/ICT/AUT/230353517_05.11.2023, RURA/ICT/AUT/2303275167_25.06.2023, RURA/ICT/AUT/230320586_20.06.2023, RURA/ICT/AUT/240425975_20.08.2024, RURA/ICT/AUT/240377170_28.02.2024, RURA/ICT/AUT/240455424_25.10.2024.

026HD/ICT/RURA/018_11.01.2018, 093HD/ICT/RURA/018_19.02.2018, 181HD/ICT/RURA/019_07.03.2019, 192HD/ICT/RURA/018_13.04.2018, 265HD/ICT/RURA/018_22.05.2018, 266HD/ICT/RURA/018_22.05.2018, 277HD/ICT/RURA/019_11.04.2019, 278HD/ICT/RURA017_25.07.2017, 279HD/ICT/RURA/019_11.04.2019, 313HD/ICT/RURA/018_08.06.2018, 334HD/ICT/RURA/018_13.06.2018, 335HD/ICT/RURA/018_14.06.2018, 343HD/ICT/RURA/017_22.08.2017, 348HD/ICT/RURA/019_10.05.2019, 349HD/ICT/RURA/018_22.06.2018, 355HD/ICT/RURA/018_22.06.2018, 356HD/ICT/RURA/018_22.06.2018, 357HD/ICT/RURA/018_22.06.2018, 368HD/ICT/RURA/018_29.06.2018, 399HD/ICT/RURA/019_03.06.2019, 401HD/ICT/RURA/018_09.07.2018, 433HD/ICT/RURA/019_19.06.2019, 444HD/ICT/RURA/019_19.06.2019, 448HD/ICT/RURA/018_27.07.2018, 449HD/ICT/RURA/018_27.07.2018, 537HD/ICT/RURA/018_14.09.2018, 607HD/ICT/RURA/018_11.10.2018, 645GM/ICT/RURA/019_11.09.2019, 646GM/ICT/RURA/019_11.09.2019, 712HD/ICT/RURA/018_04.12.2018, 742HD/ICT/RURA/018_14.12.2018, 1350HD/CMR/RURA/015_08.12.2015 .

Senegal

AGREE PAR ARPT SENEGAL

Numéro d'agrément : XXXXXX/AG/ER

071845/AG/ER,071821/AG/ER,071755/AG/ER,071710/AG/ER,071617/AG/ER,071414/AG/ER,071395/AG/ER,071394/AG/ER,071347/A 072100/AG/ER, 072164/AG/ER, 072164/AG/ER, 072183/AG/ER, 072231/AG/ER, 072453/AG/ER, 072469/AG/ER, 072536/AG/ER, 072588/AG/ER, 072485/AG/ER, 072474/AG/ER, 072264/AG/ER, 072613/AG/ER, 072588/AG/ER, 072646/AG/ER, 072722/AG/ER, 072739/AG/ER, 072814/AG/ER, 072877/AG/ER

Serbia

И005 17, **И005 18**, **ИН005 19**, **И005 20**, **И005 21**, **И005 22**, **И005 23**, **И005 24**, **И005 25**

И011 14, **И011 15**, **И011 16**, **И011 17**, **И011 18**, **И011 19**, **И011 20**, **И011 21** , **И011 22**, **И011 23**, **И011 24**, **И011 25**

И038 19, **И038 20**, **И038 21**, **И038 22**, **И038 23**c, **И0038 24**, **И0038 25**

Singapore

Complies with
IMDA Standards
BD104682

Fig. 1 Identification in accordance with Radiocommunication Act.

Complies with IMDA Standards: **DA103238**, **DA103787**, **DA103858**, **DA104328**, **DA104682**, **DA104812**, **DA105282**, **DA107248**, **DA107974**, **DB03227**, **DB101762**, **DB103858**, **DB106879**, **DB107220**, **DB106879**.

Registration Number: **G1594-19**, **G1858-19**, **G5521-19**, **N0039-21**, , **N0254-17**, **N0254-17**, **N0356-20**, **N0688-15**, **N0715-15**, **N0721-15**, **N0871-19**, **N0982-20**, **N1085-21**, , **N1453-20**, **N1599-19**, **N1629-17**, **N1630-17**, **N2052-18**, **N2053-18**, **N2069-19**, **N2152-20**, **N2285-19**, **N2404-19**, **N2405-19**, **N2415-18**, **N2420-18**, **N2565-18**, **N2673-18**, **N2700-18**, **N2706-19**, **N2853-18**, **N2860-16**, **N2991-18**, **N2992-18**, **N3005-18**, **N3083-18**, **N3277-20**, **N3278-20**, **N3548-18**, **N3577-18**, **N3888-16**, **N3970-18**, , **N4123-19**, **N4334-20**, **N4347-21**, , , **N4877-19**, **N4878-19**, **N4887-19**, **N4975-17**, **N5068-19**, **N5069-19**, **N5081-20**, **N5358-20**, **N5835-20**, **N5856-20**, **S2946-20**, **S3583-19**, **S5104-21**,**N5264-21**,**N5963-21**,**N0708-17**,**N1019-22**,**N1568-22**,**N1851-22**,**N1898-22**,**N3020-22**,**N3453-22**,**N3456-22**,**N3450-22**,,**N3835-22**, **G0443-21**, **N3888-16**, **N0254-17**, **N0708-17**, **N5372-22**, **N5373-22**, **N6052-22**, **N0374-23**, **N0415-23**, **N0414-23**, **N1159-23**, **N5856-20**, **N1233-23**, **N1291-23**, **N1631-23**, **N2673-23**, **N3098-23**, **N3096-23**, **N3688-18**, **N3555-18**, **G1231-23**, **N0452-23**, **S3262-23**, **S3263-23**, **N3567-23**, **N3097-23**, **N0951-24**, **N2161-24**, **N1153-24**, **N1074-24**, **N1186-24**, **N1600-19**, **N2308-24**, **N2309-24**, **N2875-24**, **N3160-24**, **DA104682**, **N4887-19**, **N5684-24**, **N5760-24**, **N5297-19**, **N5296-19**, **N0356-20**, **N0477-20**, **ESER/25/0054**.

South Africa

ICASA APPROVED:

TA-2009/464, TA-2010/218, TA-2010/1235, TA-2011/615, TA-2012/321, TA-2012/1747, TA-2012/1821, TA-2013/1679, TA-2013/1681, TA-2013/1682, TA-2013/1680, TA-2013/1683, TA-2013/2085, TA-2013/2465, TA-2013/2503, TA-2014/176, TA-2014/212, TA/2014/792, TA/2014/982, TA-2014/1719, TA-2014/1783, TA-2014/1784, TA-2014/1887, TA-2014/2108, TA-2014/2597, TA-2015/517, TA-2015/2011, TA-2015/2084, TA-2016/169, TA-2016/501, TA-2016/820, TA-2016/863, TA-2016/1449, TA-2016/2568, TA-2016/2601, TA-2016/2759, TA-2016/3407, TA-2016/3539, TA-2016/3541, TA-2017/052, TA-2017/127, TA-2017/209, TA-2017/2013, TA-2017/2824, TA-2017/3480, TA-2017/2824, TA-2018/175, TA-2018/280, TA-2018/732, TA-2018/842, TA-2018/843, TA-2018/844, TA-2018/845, TA-2018/996, TA-2018/997, TA-2018/998, TA-2018/999, TA-2018/1091, TA-2018/1095, TA-2018/1205, TA-2018/1408, TA-2018/1649, TA-2018/1650, TA-2018/1806, TA-2018/1814, TA-2018/1815, TA-2019/1853, TA-2018/2177, TA-2018/2251, TA-2018/2776, TA-2018/2777, TA-2018/2868, TA-2018/3141, TA-2018/3466, TA-2018/3561, TA-2018/3974, TA-2018/5159, TA-2019/115, TA-2019/348, TA/2019/550, TA-2019/582, TA-2019/583, TA-2019/1110, TA-2019/1111, TA-2019/1410, TA-2019/1853, TA-2019/2347, TA-2019/2348, TA-2019/5101, TA-2019/5116, TA-2019/5167, TA-2020/4885, TA-2020/5217, TA-2020/5480, TA-2020/6261, TA-2020/6392, TA-2020/6394, TA-2020/7066, TA-2020/7103, TA-2020/7390, TA-2021/0295, TA-2021/0637,TA-2021/7762,TA-2021/0949,TA-2021/1613,TA-2021/1608,TA-2021/2146,TA-2021/2307,TA-2021/2501,TA-2021/3273, TA-2022/3766, TA-2021/0637, TA-2022/0625, TA-2022/0298, TA-2022/0298, TA-2022/03215, TA-2020/7103, TA-2022/0124, TA-2020/5443, TA-2022/1222, TA-2022/3229, TA-2023/3353, TA-2023/0199, TA-2023/0338, TA-2023/0349, TA-2022/3381, RSS/NCA/TA/3/166, TA-2023/0349, TA-2023/0338, TA2023/0892, TA-2023/1203, TA-2023/2091, TA-2023/1813, TA-2005/614, TA-2024/0552, TA-2024/0552, TA-2019/348, TA-2023/0232; TA-2023/2829, TA-2023/3425, TA-2024/3199, TA-2024/0519, TA-2024/0867.

Thailand

Fig. 2 Identification in accordance with Radiocommunication Act.

1) เครื่องโทรคมนาคมและอุปกรณ์นี้ มีความสอดคล้องตามมาตรฐานหรือข้อกำหนดของ กสทช.
2) เครื่องวิทยุคมนาคมนี้มีระดับการแผ่คลื่นแม่เหล็กไฟฟ้าสอดคล้องตามมาตรฐานความปลอดภัยต่อสุขภาพของมนุษย์จากการ ใช้เครื่องวิทยุคมนาคมที่คณะกรรมการกิจการโทรคมนาคมแห่งชาติประกาศกำหนด

NBTC ID: **A57003-17, A57004-14, A57004-17, A57005-14, A57006-15, A57006-19, A57006-18, A57008-14, A57009-14, A57012-16, B38083-20,B57008-21,B57007-21,A57014-21,B57003-22,S01561-22,S01559-22, S03635-22, S00224-23, S4117-22, A57014-21, SD01415-23, A75007-22, S03477-22, SD02328-23, SD01325-23, SD03081-23, SD02729-23, A57003-22, A75003-22, S01559-22, S01729-22, A75004-22, A75004-22**

Türkiye

Further information on radio systems and declarations of conformity can be found at www.volkswagen.com/generalinfo.

Countries outside the US that approve and permit radio systems in accordance with US FCC guidelines:

FCC ID: 2AAJCBR20, FCC ID: 2AAJCBR21, FCC ID: 2AAJCBR22, FCC ID: 2AA98, FCC ID: 2AA98-COLOUR5C, FCC ID: 2AA98-MEDIUM5C, FCC ID: 2AA98-MEDIUM5C21, FCC ID: 2AA98A, FCC ID: 2AHPN-WLC, FCC ID: 2AOUZ17101001, FCC ID: 2AOUZ17101002, FCC ID: 2AOUZ17101010, FCC ID: 2AOUZ17101022, FCC ID: 2AOUZ17101023, FCC ID: 2AOUZ17101031, FCC ID: 2AOUZ17101032, FCC ID: 2AOUZ17101033, FCC ID: 2AOUZ17101034, FCC ID: 2AOUZ17101041, FCC ID: 2AOUZ17101042, FCC ID: 2AOUZ17101043, FCC ID: 2AOUZ17101051, FCC ID: 2AOUZ17101052, FCC ID: 2AOUZ17101053, FCC ID: 2AOUZ17101054, FCC ID: 2AOUZ17101055, FCC ID: 2AOUZ17101056, FCC ID: 2AOUZ17101057, FCC ID: 2AOUZ17101071, FCC ID: 2AOUZ17101072, FCC ID: 2AOUZ18020531, FCC ID: 2AOUZ18020532, FCC ID: 2AOUZ18020533, FCC ID: 2AOUZ18020534, FCC ID: 2AOUZ18100931, FCC ID: 2APOM-MQBA0, FCC ID: 2AVXWWSBRC001, FCC ID: 2AXPS-WPC003-1, FCC ID: 772C-LB1FD, FCC ID: BEJLCW05-VWE5, FCC ID: BEJMIB2, FCC ID: BEJMIB2PQ, FCC ID: BEJ-MEBICAS3, FCC ID: BEJ-MIBPQMIN, FCC ID: BEJ-MIB3O1, FCC ID: BEJTLAHW3IU-E, FCC ID: BEJTLAHW3IU-N, FCC ID: BEJTLVHE4IU-E, FCC ID: BEJTLVHE4IU-N, FCC ID: BEJTLVHM3IU-E, FCC ID: BEJTLVHW3IU-E, FCC ID: BEJTLVHM3IU-N, FCC ID: BEJTLVM3IU-N, FCC ID: BEJTUVM01IU, FCC ID: CWTUGZZF1, FCC ID: CWTUGZZF2, FCC ID: IYZVK2, FCC ID: KR5-BCMEVOC, FCC ID: KR5FS14T, FCC ID: KR5FS14TK, FCC ID: KR55NA920791A, FCC ID: LTQR3TR, FCC ID: NBG010180T, FCC ID: NBG010905A, FCC ID: NBG011719A, FCC ID: NBG013854, FCC ID: NBG01RS4, FCC ID: NBG011719A, FCC ID: NBG10176, FCC ID: NBG9068, FCC ID: NBG92596263, FCC ID: NBGBCMEVO, FCC ID: NBGBCMEVO5, FCC ID: NBGBCM2R, FCC ID: KR5BCM37WBL, FCC ID: NBGFS09P03, FCC ID: NBGFS12A, FCC ID: NBGFS12A01, FCC ID: NBGFS12P, FCC ID: NBGFS12P01, FCC ID: NBGFS12PM, FCC ID: NBGFS12P01M, FCC ID: NBGFS125C, FCC ID: NBGFS125C1, FCC ID: NBGFS125C5, FCC ID: NBGFS173NP, FCC ID: NBGFS173NPM, FCC ID: NBGFS173NR, FCC ID: NBGFS1744M, FCC ID: NBGFS19, FCC ID: NBGFS191, FCC ID: NBGFS93N, FCC ID: NBGMQBBB, FCC ID: NBGMQBBH, FCC ID: NBGPQ12P01, FCC ID: NBGRSB19, FCC ID: NF3-FR5CPEC, FCC ID: NF3-LRR3SCU, FCC ID: NF3-LRR4, FCC ID: NF3-MRR1PLUS, FCC ID: NF3-MRR1REAR, FCC ID: NF3-MRREVO14F, FCC ID: NF3-LRR3SCU, FCC ID: NT8-FPK8IMMO5D, FCC ID: NT8-VWMIBREGIO, FCC ID: NZLADHL5D, FCC ID: NZLJCIBUSHL4, FCC ID: OAYARS4B, FCC ID: OAYARS5B, FCC ID: OYGTSSRE4UD, FCC ID: OYGTSSRE4UF, FCC ID: OYGTSSSG4G5, FCC ID: QIPALAS6A-US, FCC ID: QISME919BS-567BN, FCC ID: QISME919BS-567BNB, FCC ID: QZ9-KA3, FCC ID: RK7MBC-NAR, FCC ID: RK7MBC-NAR2, FCC ID: RK7185-00, FCC ID: RK7186-00, FCC ID: RX2BNFHL, FCC ID: RX2BNFLL, FCC ID: T8GA270, FCC ID: T8GA475, FCC ID: T8GA476, FCC ID: T8GP114, FCC ID: VPYLB1KD, FCC ID: WJLHT-5, FCC ID: NF3-FR5CUEC, FCC ID: NBG01RS55, FCC ID: NF3-F5CP42, FCC ID: NBG01RS53,FCC ID: NBGFS125C1, FCC ID: BEJ-MIB3OIVR-E, FCC ID: BEJTLVHM3IU-N, FCC ID: 2AXPS-WPC003-1, FCC ID: 2AXPS-WPC003-5, FCC ID: 2ACC7DDAECE02, FCC ID: BEJTLVUM3IU-W, FCC ID: BEJTLVUW3IU-W, FCC ID: BEJTLVUM3IU-E, FCC ID: BEJTLVUW3IU-N, FCC ID: BEJTLVUM3IU-N, FCC ID: NT8-FPK815DTR2, FCC ID: NBGFS1901S, FCC ID: NBGFS19S, FCC ID: BEJ-ICAS3GP, FCC ID: NBGFS191S, FCC ID: BEJTLVLM3IU-N, FCC ID: BEJTLVUW3IU-W, FCC ID: BEJTLVUW3IU-N, FCC ID: BEJTLVUM3IU-W, FCC ID: BEJTLVUM3IU-N, FCC ID: BEJTLVUM3IU-E, FCC ID: BEJTLVUE4IU-E, FCC ID: BEJTLVUE4IU-N, FCC ID: BEJTLVUE4IU-W , FCC ID: QZ9-DCB, FCC ID: 2BAHD-EC30693, FCC ID: YGONFCTGSAU336, FCC ID: KR5I22U, FCC ID: BEJ-MIB3OIVR-E01, FCC ID: BEJ-MIB3OI, FCC ID: BEJ-MIB3GP, FCC ID: YGONFCTGSAU336, FCC ID: YGOBUEGELNFC, FCC ID: YGOFLUSHNFC, FCC ID: 2A6TC-HFA30 .

Interference Statement

This device complies with part 15 of the FCC Rules. Operation is subject to the following two conditions:

(1) This device may not cause harmful interference, and

(2) This device must accept any interference received, including interference that may cause undesired operation.

CAUTION TO USERS: Changes or modifications not expressly approved by the party responsible for compliance could void the user`s authority to operate the equipment.

FCC RF Exposure Statement

FCC ID: RK7MBC-NAR

This equipment complies with FCC radiation exposure limits set forth for an uncontrolled environment. End users must follow the specific operating instruction for satisfying RF exposure compliance. This transmitter must not be co-located or operating in conjunction with any other antenna or transmitter.

This is a CONSUMER device.

BEFORE USE, you MUST REGISTER THIS DEVICE with your wireless provider and have provider's consent. Most wireless providers consent to the use of signal boosters. Some providers may not consent to the use of this device on their network. If you are unsure, contact your provider.

You MUST operate this device with approved antennas and cables as specified by the manufacturer. Antennas MUST be installed at least 20 cm (8 inches) from any person.

You MUST cease operating this device immediately if requested by FCC or a licensed wireless service provider.

WARNING: E911 location information may not be provided or may be inaccurate for calls served by using this device.

Wireless Notice

This device complies with FCC radiation exposure limits set forth for an uncontrolled environment and meets the FCC radio frequency (RF) Exposure Guidelines. This transmitter must not be colocated or operating in conjunction with any other antenna or transmitter.

FCC Class A digital device notice

NOTE: This equipment has been tested and found to comply with the limits for a Class A digital device, pursuant to part 15 of the FCC Rules. These limits are designed to provide reasonable protection against harmful interference when the equipment is operated in a commercial environment. This equipment generates, uses, and can radiate radio frequency energy and, if not installed and used in accordance with the instruction manual, may cause harmful interference to radio communications. Operation of this equipment in a residential area is likely to cause harmful interference in which case the user will be required to correct the interference at his own expense.

FCC Class B digital device notice

NOTE: This equipment has been tested and found to comply with the limits for a Class B digital device, pursuant to Part 15 of the FCC Rules. These limits are designed to provide reasonable protection against harmful interference in a residential installation. This equipment generates, uses and can radiate radio frequency energy and, if not installed and used in accordance with the instructions, may cause harmful interference to radio communications. However, there is no guarantee that interference will not occur in a particular installation. If this equipment does cause harmful interference to radio or television reception, which can be determined by turning the equipment off and on, the user is encouraged to try to correct the interference by one or more of the following measures:

- Reorient or relocate the receiving antenna.
- Increase the separation between the equipment and receiver.
- Connect the equipment into an outlet on a circuit different from that to which the receiver is connected.
- Consult the dealer or an experienced radio/TV technician for help.

Ukraine

Further information on radio systems and declarations of conformity can be found at www.volkswagen.com/generalinfo.

BSD 3.0	**24,05 - 24,25 GHz**	**20 dBm**
LCA 2.0	**24,05 - 24,25 GHz**	**20 dBm**
RS4	**24,05 - 24,25 GHz**	**20 dBm**

повний текст декларації про відповідність доступний на веб-сайті за такою адресою: www.volkswagen.com/generalinfo.

1APTV R3TR, **1BOSC0001**, **1HELARS40**, **109**, **1O094.002801-15**, **1O094.004984-17**, **1O094.004985-17**, **1O094.004986-17**, **1O094.006565-18**, **1O094.007280-19**, **0848**, **486.25-CET**, **920697B**, **TLAHW3IU-E**, **TLAHW3IU-W**, **TLVHM3IU-E**, **TLVLM3IU-E**, **TLVHM3IU-W**, **1CONT0001**

1.001.010758/M1-16, **1.001.017067-18-TE**, **1.001.018566-19-TE**, **1.001.018601-19-TE**, **1.001.018646-19-TE**, **1.001.018774-19-TE**, **1.001.018968-19-TE**, **1.001.019275-19-TE**, **1.001.019287-19-TE**, **1.001.020220-19-TE**, **1.001.020355-19-TE**, **1.001.020702-19-TE**, **1.001.020853-19-TE**, **1.001.020929-19-TE**, **1.001.021241-20-TE**, **1.001.021295-20-TE**, **1.001.022108-20-TE**

UA.R.TR.052.041-21, **UA.R.TR.052.081-20**, **UA.R.TR.052.088-19**, **UA.R.TR.052.089-19**, **UA.R.TR.052.130-20**, **UA.R.TR.052.161-19**, **UA.R.TR.052.187-19**, **UA.R.TR.052.189-19**, **UA.R.TR.052.190-19**, **UA.R.TR.052.194-19**, **UA.R.TR.052.215-21**, **UA.R:TR.052.433-19**, **UA.R.TR.052.529-19**, **UA.R.TR.052.533-19**, **UA.R.TR.052.598-19**, **UA.R.TR.052.613-19**, **UA.R.TR.052.658-19**,**UA.R.TR.052.634-19**,**UA.R.TR.052.068-22**, **UA.R.TR.052.169-23**.

UA.TR.028: **680.13-CET**, **680.14-CET**, **680.15-CET**, **2423.10-CET**, **2423.17-CET**, **2423.21-CET**, **2423.31-CET**, **2423.32-CET**, **2423.33-CET**, **2423.44-CET**, **2423.49-CET**, **2423.50-CET**, **2423.51-CET**, **2539.8-CET**, **2539.9-CET**, **2539.10-CET**, **2539.12-CET**, **2539.13-CET**, **2539.15-CET**, **2539.17-CET**, **2539.19-CET**, **2539.20-CET**, **2539.21-CET**, **2539.22-CET**, **2539.23-CET**, **2539.30-CET**, **2539.31-CET**, **2539.45-CET**, **2579.1-CET**, **2579.2-CET**, **2580.4-CET**, **2580.5-CET**, **2610.2-CET**,**2423.62.2-CET**

UA.TR.030.026039-19, **UA.TR.030.028039-19**, **UA.TR.109.R.0009-18**, **UA.TR.109.R.0016-19**, **UA.TR.109.R.0021-19**, **UA.TR.109.R.0023-19**, **UA.TR.109.R.0026-19**, **UA.TR.109.R.0028-19**, **UA.TR.109.R.0029-19**, **UA.TR.109.R.0030-19**, **UA.TR.109.R.0032-19**, **UA.TR.109.R.0042-20**, **UA.TR.109.R.0057-21**, **UA.TR.109.R.0082-20**, **UA.TR.109.R.0133-19**, **UA.TR.109.R.0155-18**, **UA.TR.109.R.0162-19**, **UA.TR.109.R.0168-19**, **UA.TR.109.R.0174-18**, **UA.TR.109.R.0179-18**, **UA.TR.109.R.0187-18**, **UA.TR.109.R.0201-19**, **UA.TR.109.R.0212-19**, **UA.TR.109.R.0214-18**, **UA.TR.109.R.0249-18**, **UA.TR.109.R.0259-18**, **UA.TR.109.R.0281-18**, **UA.TR.109.R.0282-18**, **UA.TR.109.R.0302-18**, **UA.TR.109.R.0304-18**, **UA.TR.109.R.0305-18**, **UA.TR.109.R.0307-18**, **UA.TR.109.R.0313-18**, **UA.TR.109.R.0333-20**, **UA.TR.109.R.0336-19**, **UA.TR.109.R.0337-19**, **UA.TR.109.R.0344-18**, **UA.TR.109.R.0345-18**, **UA.TR.109.R.0374-18**, **UA.TR.109.R.0375-18**, **UA.TR.109.R.0376-18**, **UA.TR.109.R.0389-18**, **UA.TR.109.R.0394-18**, **UA.TR.109.R.0411-18**, **UA.TR.109.R.0425-18**, **UA.TR.109.R.0426-18**, **UA.TR.109.R.0438-18**, **UA.TR.109.R.0467-18**, **UA.TR.109.R.0598-18**, **UA.TR.109.R.0645-18**,**UA.TR.109.R.0340-21**,**UA.TR.109.R.0028-22**, **UA.TR.109.R.0174-18**, **UA.TR.109.R.0389-18**, **UA.TR.109.R.0241-22**, **UA.TR.109.R.0252-22**, **UA.TR.109.R.0250-22**, **UA.TR.109.R.0069-23**, **UA.TR.109.R.0070-23**, **UA.TR.109.R.0037-23**, **UA.TR.109.R.0068-23**, **UA.TR.109.R.0105-23**, **UA.TR.109.R.252-22**, **UA.TR.109.R.0049-23**, **UA.TR.109.R.0141-23**,

UA.TR.001.0355.30.00616-22

UA RF: 1BOSC0001, **UA RF: 1CONT0001**, **UA RF: 1CONT0002**, **UA RF: 1HELABSD3**, **UA RF: 1HELARS40**, **UA RF: 1BOSC0016**, **UA RF: 1BOSC0017**, **UA RF: 1BOSC0018**, **UA RF: 1HELARS53**, **UA RF: 1HELARS55**

UA.032.CT.0026-19, **UA.032.CT.0030-18**, **UA.032.CT.0083-19**, **UA.032.CT.0084-19**, **UA.032.CT.0107-19**, **UA.032.CT.0188-18**, **UA.032.CT.0221-20**, **UA.032.CT.0224-19**, **UA.032.CT.0225-19**, **UA.032.CT.0225-21**, **UA.032.CT.0226-19**, **UA.032.CT.0227-19**, **UA.032.CT.0313-19**, **UA.032.CT.0527-19**, **UA.032.CT.0187-22**, **UA.032.CT.280-22**

04-1214/123.

UKR.355-10/233, **UKR.355-11/233**, **UA.R.TR.052.089-19**, **UA.R.TR.052.091-23**, **UA.R.TR.052.044-23**, **UA.R.TR.052.090-23**, **UA.R.TR.052.204-22** ,

Vietnam

ICT

SunTech VietNam Technology Company Limited, C00082015, SUNTECH VietNam, SUNTECH VN:

71/CVT-TT3, 220/CVT-TT3

220221.01-TN, 220208.14-TN, 773/TTDLCL-CN, 210816.05-TN, 210526.20-TN, 2108106.04-TN, 3568/CVT-CNDV, 210526.21-TN, 2357/CVT-CL,220310.03-TN,220321.12-TN, 220607.09-TN

, A0858170820AF04A3,A2029161221AA04A3, A1099061022AE01A3, A1100061022AE01A3, A0590260523AF04A3, B0401220321AE01A3, B0411230321AF04A3, B1189140520AF04A2, B2110171214BE11A2,B0423060422AF04A3,B0609240522AF04A3,B0620300522AE01A3,0735240622AF04A3,B0734240622AF04A3,B B1093160822AE01A3, B1092160822AE01A3, B1089160822AE01A3, B1437261022AF04A3, B1647291122AF04A3, B1646291122AF04A3.

C0032060315BE01A2, C0032210220AF04A2, C0033060315BE01A2, C0055100417AF04A2, C0101230419AF04A2, C0118220519AF04A2, C0119220519AF04A2, C0124040520AF04A2, C0135110520AF04A2, C0141020718AF04A2, C0158100620AF04A2, C0159100620AF04A2, C0161110620AF04A2, C0162110620AF04A2, C0163110620AF04A2, C0174020818AF04A2, C0175020818AF04A2, C0181260620AF04A2, C0182260620AF04A2, C0183260620AF04A2, C0184260620AF04A2, C0197111217AF04A2, C0229240919AF04A2, C0238150321AF04A3, C0239150321AF04A3, C0289310321AF04A3, C0307010920AF04A3, C0308010920AF04A3, C0309010920AF04A2, C0319091219AF04A2, C0470201120AF04A3, C0438061120AF04A3,C01360900222AF04A3,C0197280222AF04A3,C0237070322AF04A3,C0577170522AF04A3, C1064310822AF04A3, C0409171023AF04A3, C003030124AF04A33, B0471130324AF04A3, CB0500180324AF04A3, B0770070524AE01A3, C0430230724AF04A3, B0770070524AE01A3, C0431230724AF04A3, C0671011024AE01A3, A1125041224AF61A4, A1126041224AF61A4, C0967241224AF71A3, C0968241224AF71A3, C0008030125AF71A3, C0030070125AF71A4, C0059160125AF71A4, C0060160125AF71A4

Hella KGaA Hueck Co.: **A0858170820AF04A3, B134510122AF04A3, B1346101022AF04A3, B1347101022AF04A3, B1344101022AF04A3, B1346101022AF04A3, C0013190118AF04A2, C0036120121AF04A3, C0065120418AF04A2, C0068190418AF04A2, C0080180319AF04A2, C0092300320AF04A2, C0100100420AF04A2, C0163150719AF04A2, C0177011117AF04A2, C0178011117AF04A2, C0181230221AF04A3, C0205060916AF04A2, C0226170918AF04A2, C0314061219AF04A2, C0952190821AF04A3, C0953190821AF04A3, C1071270921AF04A3, C1099011021AF04A3, C1100011021AF04A3, C0136090222AF04A3, C0197280222AF04A3, C1239021122AF04A3, C124002122AF04A3, C1798281222AF04A2, B0643170523AF04A3, B0458140423AF04A3, B1566051121AE01A3, 231009.05-TN, 230911.13-TN, B0456110324AF03A3, B0454110324AF03A3, C0147180324AF04A3, C0386280624AF04A3.**

ICT motor: **A1900761**

General information on the data

Except where indicated or specifically stated, the technical data applies to the basic model. The figures may be different if additional equipment is fitted and in the case of different model versions, special vehicles and country-dependent equipment. All data in the official vehicle documents always takes precedence.

The official vehicle documents show which drive and which power output your vehicle has.

Please observe the notes and information for vehicles with N1 approval *(→ N1 approval)*.

Weight

The values for the kerb weight in the following tables apply to the road-ready vehicle with a driver weight of 75 kg (approx. 165 lbs), service fluids and, where applicable, tools and spare tyre. Additional equipment and retrofitted accessories increase the stated kerb weight and reduce the maximum permitted load accordingly.

The load comprises the weights of the following:

— Passengers

— All luggage inside and outside of the vehicle.

— Add-on parts.

The permitted gross vehicle weight rating and gross axle weight rating must never be exceeded. The permitted values are provided on the safety certificate on the B-pillar on the driver side *(→ Safety certificate)* *(→ Type plate)*.

Performance figures

The values apply only for optimum road and weather conditions.

The performance figures were measured without equipment which may influence performance, e.g. add-on parts.

Information on battery energy content and system power

The specified net battery energy content is a battery-typical value that is independent of the vehicle. It is determined with a constant load profile under defined boundary conditions and takes into account the full range of battery energy content that can be used in the vehicle until the vehicle comes to a standstill. The actual discharge energy may deviate from this because it depends on the specific driving profile and the battery temperature. The homologated range specification according to WLTP legislation corresponds to the usable discharge energy for a new vehicle.

The maximum power is available when the high-voltage battery has the highest possible charge level and is in the optimal operating temperature range. The power available in the individual driving situation depends on variable factors such as outside temperature and also temperature, charge and conditioning state or physical ageing of the high-voltage battery. For 4MOTION models, i.e. with all-wheel drive, the maximum power is determined in accordance with UN-GTR.21.

Gradient angle

The gradient angle is an indication of the vehicle's gradeability and corresponds to the gradient that the vehicle can drive up under its own power. This depends on aspects such as the road surface, weather conditions and engine power. The values apply to a moving vehicle and not to driving off from standstill.

The number of metres in height gained over a distance of 100 m (approx. 300 ft) (gradient) will be given as a percentage or degree value (100% = 45 degrees).

Vehicle identification number

Structure of the vehicle identification number

The vehicle identification number VIN comprises 17 characters. These characters are categorised into seven groups.

The following sample vehicle identification numbers are used to demonstrate the structure.

Group	1			2			3		4	5	6	7					
Position:	1	2	3	4	5	6	7	8	9	10	11	12	13	14	15	16	17
Example	W	V	W	Z	Z	Z	C	B	Z	R	E	4	0	0	9	5	3
	W	V	W	A	F	2	5	7	4	8	Y	0	0	0	0	0	1

1 Vehicle manufacturer identifier:

WVW

Volkswagen Passenger Cars

WVG

Volkswagen Passenger Cars

1VW

Volkswagen Group of America Inc., Volkswagen de México, S.A. de C.V

3VW

Volkswagen de México, S.A. de C.V

MFB

Garuda Matraman Motor (Indonesia)

2 Filler characters: the filler characters may differ depending on manufacturer or contain information about the body or gearbox type.

3 Vehicle class per model:

14

ID.7

2G

T-Roc

57

Tiguan

6R

Polo

AC

T-Roc Cabriolet

BV

Golf

CB

Passat

CA

Atlas

RC

Touareg

Depending on manufacturer, the places 7 to 9 can also contain information on the fuel type (7) and vehicle class (8 and 9).

4 Filler characters or check digits: the filler characters or check digits may differ depending on the manufacturer.

5 VIN index per model year:

S

2025

T

2026

V

2027

W

2028

X

2029

Y

2030

6 Production location, manufacturing plant:

C

Volkswagen Chattanooga Plant

D

Volkswagen Bratislava Plant

E

Volkswagen Emden Plant

M

Volkswagen Puebla Plant

P

Volkswagen Zwickau Plant

T

Volkswagen Pune Plant

U

Volkswagen Uitenhage Plant

V

Volkswagen Palmela Plant

W

Volkswagen Wolfsburg Plant

Y

Volkswagen Pamplona Plant

The letters assigned to the production locations may differ on a vehicle-specific basis or may have a double assignment.

(7) Sequential production number in a model year.

Position of the vehicle identification number

Windscreen

The vehicle identification number can be read from outside the vehicle through a viewer in the windscreen. The viewer is located in the lower corner of the windscreen.

Fig. 1 In the windscreen: vehicle identification number.

Stamped in the body

Depending on model, country and engine, the vehicle identification number may be stamped at one of the following locations:

— In the bonnet space in the right water drainage channel.

— In the bonnet space on the right suspension turret.

— In the bonnet space close to the bonnet hinge on the right side of the vehicle.

— In front of the right front seat under the floor covering.

— Behind the right front seat under the floor covering.

Stickers on the vehicle

Depending on model, country and engine, the vehicle identification number may be present on one of the following stickers:

— Type plate

— Safety certificate

Infotainment system

To display the vehicle identification number in the Infotainment system, carry out the following actions:

1. Tap the Vehicle symbol in the Infotainment system.
2. Tap Status in the Vehicle menu.
3. Tap Service to display the vehicle identification number *(→ Vehicle settings menu)*.

Type plate

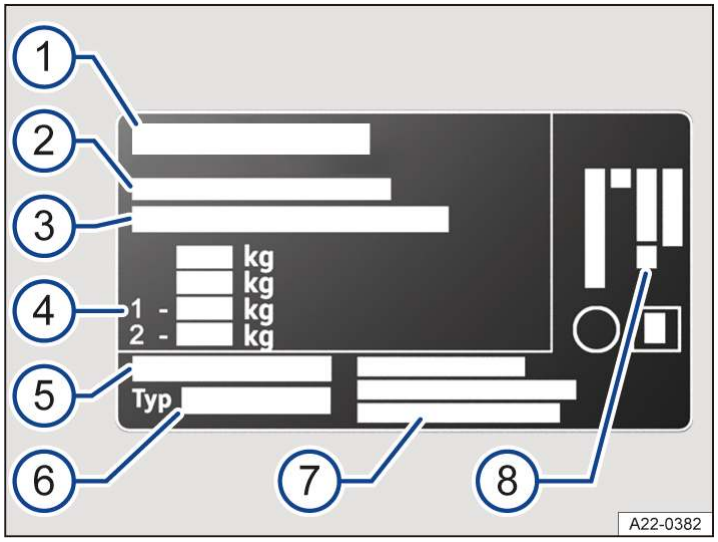

Fig. 1 Type plate: variant 1 (illustration).

Depending on country, the number of the type approval, e.g. EC type approval number, may be specified.

1. Manufacturer code.
2. Type approval.
3. Vehicle identification number.
4. Gross vehicle weight rating.

   Gross combination weight rating (vehicle plus trailer).

   Gross front axle weight rating.

   Gross rear axle weight rating.
5. Type approval number, country-specific.
6. Vehicle type.
7. Manufacturer's address.
8. Engine code.

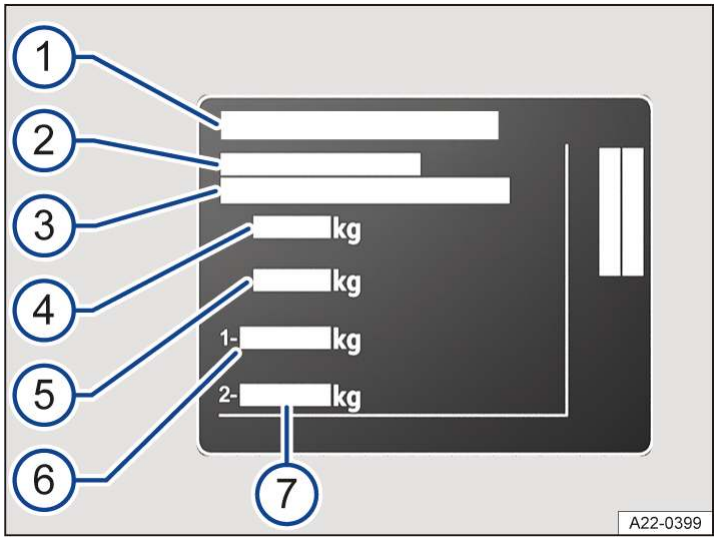

Fig. 2 Type plate: variant 2 (illustration).

Depending on country, the number of the type approval, e.g. EC type approval number, may be specified.

1. Manufacturer code.
2. Type approval.

3 Vehicle identification number.

4 Gross vehicle weight rating.

5 Gross combination weight rating (vehicle plus trailer).

6 Gross front axle weight rating.

7 Gross rear axle weight rating.

Depending on country and model, the type plate is visible in the lower area of the door pillar after opening the driver or front passenger door. Vehicles for certain countries do not have a type plate.

Safety certificate

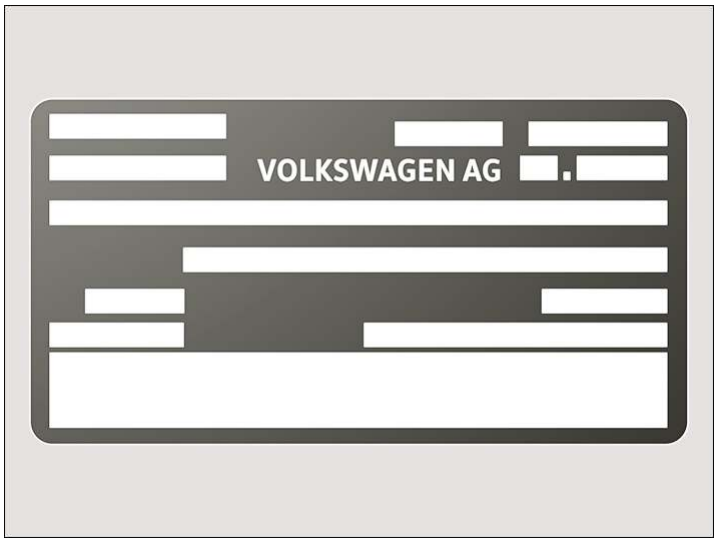

Fig. 1 Safety certificate (illustration).

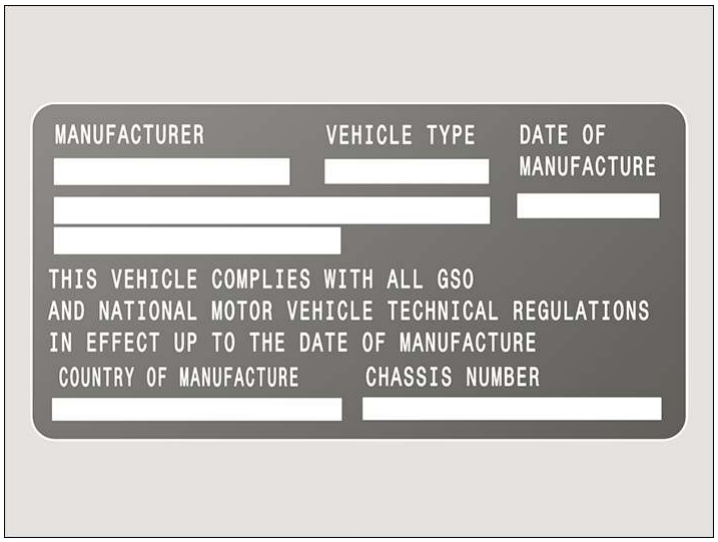

Fig. 2 Safety certificate (illustration).

A safety certificate on the door pillar in the driver door shows the following information:

— Vehicle type.

— Manufacturer.

— Date of manufacture.

— Country of manufacture.

— Vehicle identification number.

Dimensions

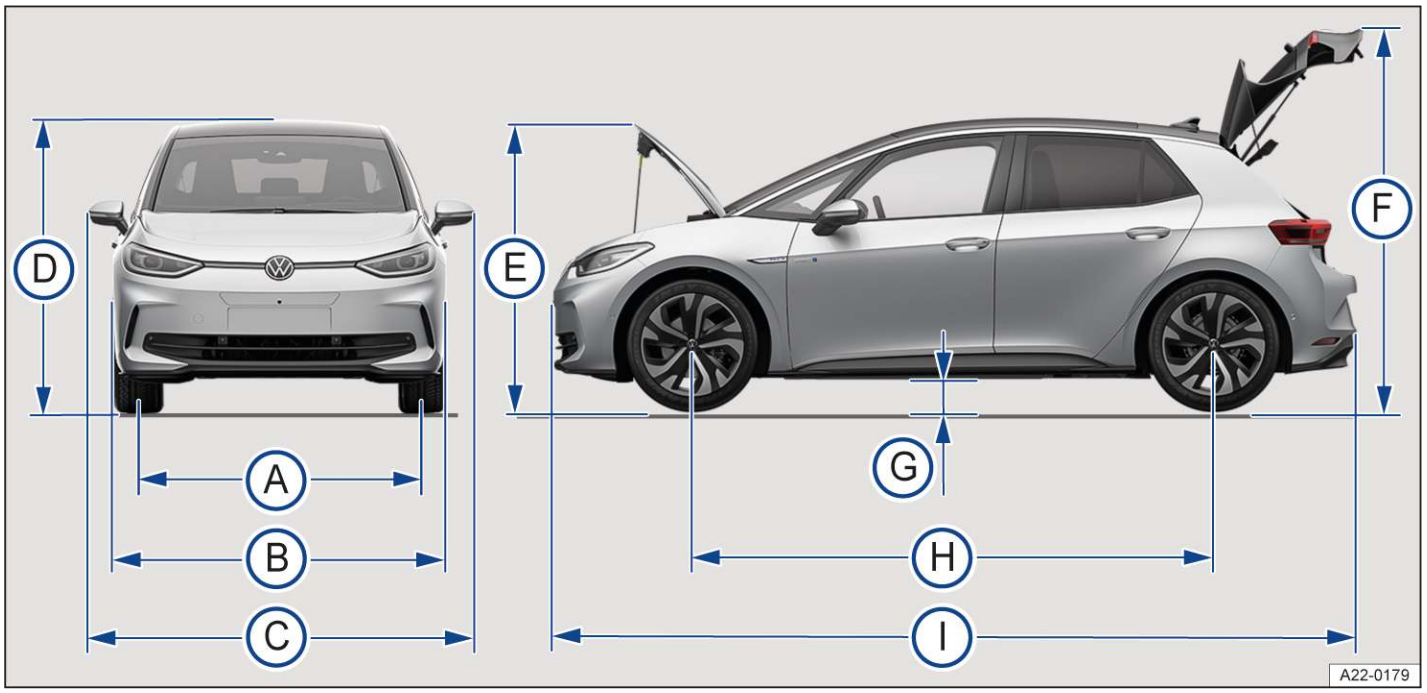

Fig. 1 Vehicle dimensions.

The data in the table applies to the basic model with basic equipment.

The specified values can vary due to different wheel rim and tyre sizes, additional equipment, different model versions or retrofitted accessories, and also for special vehicles and vehicles that have been manufactured for other countries.

Information on the composition of the weights can be found in section *(→ Technical data)*.

ID.3

Key to *Fig. 1*:			
A	Front track	mm	1537 – 1549
	Rear track	mm	1514 – 1526
B	Width	mm	1,809
C	Width with exterior mirrors folded out	mm	2,070
	Width with exterior mirrors folded in	mm	1,874
D	Height to the upper edge of the roof at kerb weight	mm	1,547
	Height with GPS aerial	mm	1,557 – 1,564
E	Height with open bonnet at kerb weight	mm	1,687
F	Height with open boot lid at kerb weight	mm	2,048
G	Ground clearance between the axles	mm	147 – 153
H	Wheelbase with full load	mm	2,770
	Minimum turning circle diameter, left-hand drive vehicle	m	10.3 – 10.4
	Minimum turning circle diameter, right-hand drive vehicle	m	11.5
I	Length from bumper to bumper	mm	4,264
	Length with factory-fitted bicycle carrier preparation when the ball coupling is mounted	mm	4,356

Capacity of washer fluid reservoir

The washer fluid reservoir has the following capacity:

— approx. 3 l

125 kW, 52 (55) kWh, rear-wheel drive, electric motor

Engine overview

Power, maximum	kW	125
Engine code		EDCA
Maximum torque	Nm	310
Maximum speed	km/h	160

Weights and axle loads

Kerb weight with driver *(→ Technical data)*	kg	1,787
Gross vehicle weight rating	kg	2,260
Gross front axle weight rating	kg	1,060
Gross rear axle weight rating	kg	1,250

Drawbar load

The maximum permissible drawbar load of the bicycle carrier preparation is 55 kg or 75 kg, depending on equipment. Please observe the information on the label next to the mounting for the bicycle carrier preparation behind the number plate holder.

Load for rear carrier systems

150 kW, 59 (63) kWh, rear-wheel drive, electric motor

Engine overview

Power, maximum	kW	150
Engine code		EDCC
Maximum torque	Nm	265
Maximum speed	km/h	160

Weights and axle loads

Kerb weight with driver *(→ Technical data)*	kg	1822
Gross vehicle weight rating	kg	2280
Gross front axle weight rating	kg	1070
Gross rear axle weight rating	kg	1260

Drawbar load

The maximum permissible drawbar load of the bicycle carrier preparation is 55 kg or 75 kg, depending on equipment. Please observe the information on the label next to the mounting for the bicycle carrier preparation behind the number plate holder.

Load for rear carrier systems

150 kW, 79 (84) kWh, rear-wheel drive, electric motor

Engine overview

Power, maximum	kW	150
Engine code		EDCA
Maximum torque	Nm	265
Maximum speed	km/h	160

Weights and axle loads

Kerb weight with driver *(→ Technical data)*	kg	1957
Gross vehicle weight rating	kg	2420
Gross front axle weight rating	kg	1110
Gross rear axle weight rating	kg	1360

Drawbar load

The maximum permissible drawbar load of the bicycle carrier preparation is 55 kg or 75 kg, depending on equipment. Please observe the information on the label next to the mounting for the bicycle carrier preparation behind the number plate holder.

Load for rear carrier systems

170 kW, 59 (63) kWh, rear-wheel drive, electric motor

Engine overview

Power, maximum	kW	170
Engine code		EDCC
Maximum torque	Nm	310
Maximum speed	km/h	160

Weights and axle loads

Kerb weight with driver *(→ Technical data)*	kg	1822
Gross vehicle weight rating	kg	2280
Gross front axle weight rating	kg	1070
Gross rear axle weight rating	kg	1260

Drawbar load

The maximum permissible drawbar load of the bicycle carrier preparation is 55 kg or 75 kg, depending on equipment. Please observe the information on the label next to the mounting for the bicycle carrier preparation behind the number plate holder.

Load for rear carrier systems

170 kW, 79 (84) kWh, rear-wheel drive, electric motor

Engine overview

Power, maximum	kW	170
Engine code		EDCA
Maximum torque	Nm	310
Maximum speed	km/h	160

Weights and axle loads

Kerb weight with driver *(→ Technical data)*	kg	1957
Gross vehicle weight rating	kg	2420
Gross front axle weight rating	kg	1110
Gross rear axle weight rating	kg	1360

Drawbar load

The maximum permissible drawbar load of the bicycle carrier preparation is 55 kg or 75 kg, depending on equipment. Please observe the information on the label next to the mounting for the bicycle carrier preparation behind the number plate holder.

Load for rear carrier systems

210 kW, 79 (84) kWh, rear-wheel drive, electric motor

Engine overview

Power, maximum	kW	210
Engine code		EDFA
Maximum torque	Nm	545
Maximum speed	km/h	180

Weights and axle loads

Kerb weight with driver *(→ Technical data)*	kg	1,981
Gross vehicle weight rating	kg	2,430
Gross front axle weight rating	kg	1,110
Gross rear axle weight rating	kg	1,370

Drawbar load

The maximum permissible drawbar load of the bicycle carrier preparation is 55 kg or 75 kg, depending on equipment. Please observe the information on the label next to the mounting for the bicycle carrier preparation behind the number plate holder.

Load for rear carrier systems

240 kW, 79 (84) kWh, rear-wheel drive, electric motor

Engine overview

Power, maximum	kW	240
Engine code		EEWA
Maximum torque	Nm	545
Maximum speed	km/h	200

Weights and axle loads

Kerb weight with driver *(→ Technical data)*	kg	1,993
Gross vehicle weight rating	kg	2,430
Gross front axle weight rating	kg	1,110
Gross rear axle weight rating	kg	1,370

Drawbar load

The maximum permissible drawbar load of the bicycle carrier preparation is 55 kg or 75 kg, depending on equipment. Please observe the information on the label next to the mounting for the bicycle carrier preparation behind the number plate holder.

Load for rear carrier systems