TABLE OF CONTENTS

SECTION		PAGE	
1	INTRODUCTION	3	1
2	THINGS TO KNOW BEFORE STARTING YOUR VEHICLE	9	2
3	UNDERSTANDING THE FEATURES OF YOUR VEHICLE	53	3
4	UNDERSTANDING YOUR INSTRUMENT PANEL	83	4
5	STARTING AND OPERATING	109	5
6	WHAT TO DO IN EMERGENCIES	147	6
7	MAINTAINING YOUR VEHICLE	157	7
8	MAINTENANCE SCHEDULES	217	8
9	IF YOU NEED CONSUMER ASSISTANCE	233	9
10	INDEX	243	10

INTRODUCTION

CONTENTS

- Introduction 4
- How To Use This Manual 4
- Warnings And Cautions 6
- Vehicle Identification Number 6
- Vehicle Modifications / Alterations 7

INTRODUCTION

This manual has been prepared with the assistance of service and engineering specialists to acquaint you with the operation and maintenance of your new vehicle. It is supplemented by a Warranty Information Booklet and various customer oriented documents. You are urged to read these publications carefully. Following the instructions and recommendations in this manual will help assure safe and enjoyable operation of your vehicle.

NOTE: After you read the manual, it should be stored in the vehicle for convenient reference and remain with the vehicle when sold, so that the new owner will be aware of all safety warnings.

When it comes to service, remember that your dealer knows your vehicle best, has the factory-trained technicians and genuine Mopar® parts, and is interested in your satisfaction.

WARNING!

Engine exhaust, some of its constituents, and certain vehicle components contain or emit chemicals known to the State of California to cause cancer and birth defects or other reproductive harm. In addition, certain fluids contained in vehicles and certain products of component wear contain or emit chemicals known to the State of California to cause cancer and birth defects or other reproductive harm.

HOW TO USE THIS MANUAL

Consult the table of contents to determine which section contains the information you desire.

The detailed index, at the rear of this manual, contains a complete listing of all subjects.

Consult the following table for a description of the symbols that may be used on your vehicle or throughout this owner's manual:

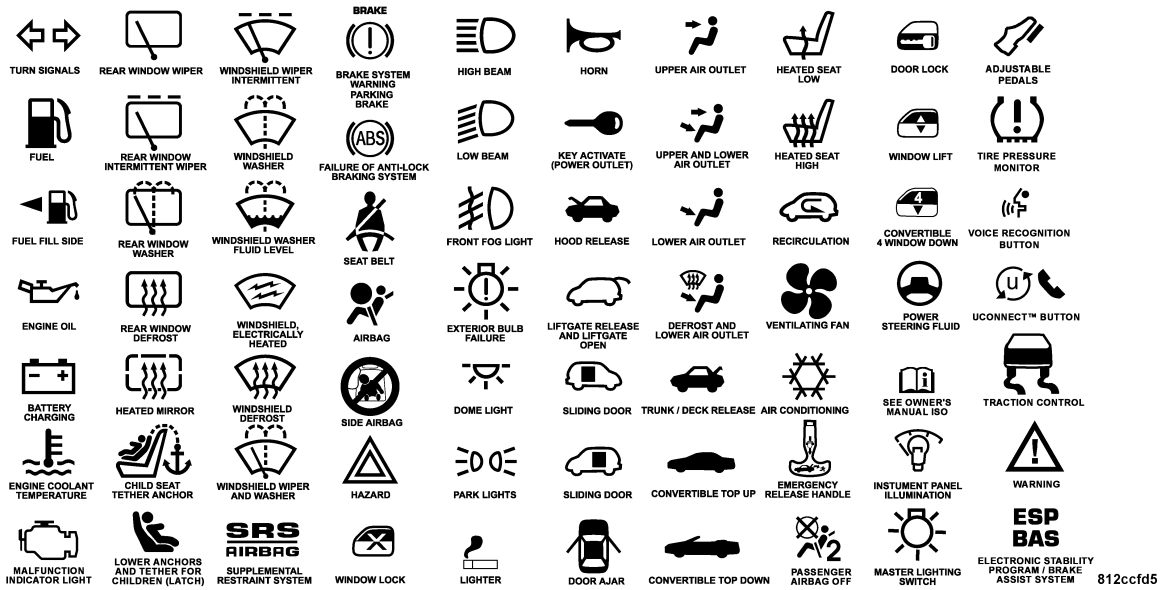
TURN SIGNALS
REAR WINDOW WIPER
WINDSHIELD WIPER INTERMITTENT
BRAKE
BRAKE SYSTEM WARNING PARKING BRAKE
HIGH BEAM
HORN
UPPER AIR OUTLET
HEATED SEAT LOW
DOOR LOCK
ADJUSTABLE PEDALS
FUEL
REAR WINDOW INTERMITTENT WIPER
WINDSHIELD WASHER
ABS
FAILURE OF ANTI-LOCK BRAKING SYSTEM
LOW BEAM
KEY ACTIVATE (POWER OUTLET)
UPPER AND LOWER AIR OUTLET
HEATED SEAT HIGH
WINDOW LIFT
TIRE PRESSURE MONITOR
FUEL FILL SIDE
REAR WINDOW WASHER
WINDSHIELD WASHER FLUID LEVEL
SEAT BELT
FRONT FOG LIGHT
HOOD RELEASE
LOWER AIR OUTLET
RECIRCULATION
4
CONVERTIBLE 4 WINDOW DOWN
VOICE RECOGNITION BUTTON
ENGINE OIL
REAR WINDOW DEFROST
WINDSHIELD, ELECTRICALLY HEATED
AIRBAG
EXTERIOR BULB FAILURE
LIFTGATE RELEASE AND LIFTGATE OPEN
DEFROST AND LOWER AIR OUTLET
VENTILATING FAN
POWER STEERING FLUID
u
UCONNECT™ BUTTON
BATTERY CHARGING
HEATED MIRROR
WINDSHIELD DEFROST
SIDE AIRBAG
DOME LIGHT
SLIDING DOOR
TRUNK / DECK RELEASE
AIR CONDITIONING
SEE OWNER'S MANUAL ISO
TRACTION CONTROL
ENGINE COOLANT TEMPERATURE
CHILD SEAT TETHER ANCHOR
WINDSHIELD WIPER AND WASHER
HAZARD
PARK LIGHTS
SLIDING DOOR
CONVERTIBLE TOP UP
EMERGENCY RELEASE HANDLE
INSTUMENT PANEL ILLUMINATION
WARNING
MALFUNCTION INDICATOR LIGHT
LOWER ANCHORS AND TETHER FOR CHILDREN (LATCH)
SRS AIRBAG
SUPPLEMENTAL RESTRAINT SYSTEM
WINDOW LOCK
LIGHTER
DOOR AJAR
CONVERTIBLE TOP DOWN
PASSENGER AIRBAG OFF
MASTER LIGHTING SWITCH
ESP BAS
ELECTRONIC STABILITY PROGRAM / BRAKE ASSIST SYSTEM
812ccfd5

WARNINGS AND CAUTIONS

This manual contains **WARNINGS** against operating procedures which could result in an accident or bodily injury. It also contains **CAUTIONS** against procedures which could result in damage to your vehicle. If you do not read this entire manual you may miss important information. Observe all Warnings and Cautions.

VEHICLE IDENTIFICATION NUMBER

The vehicle identification number (VIN) is on a stamped plate at the left front corner of the instrument panel, visible through the windshield. This number also appears on the Automobile Information Disclosure Label affixed to a window on your vehicle. Save this label as a convenient record of your vehicle identification number and optional equipment.

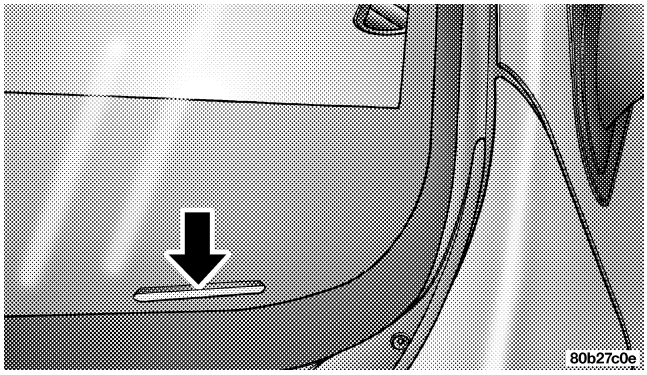

Vehicle Identification Number

VEHICLE MODIFICATIONS / ALTERATIONS

WARNING!
Any modifications or alterations to this vehicle could seriously affect its roadworthiness and safety and may lead to an accident resulting in serious injury or death.

THINGS TO KNOW BEFORE STARTING YOUR VEHICLE

CONTENTS

- A Word About Your Keys 11
  - Ignition Key 11
  - Key-In-Ignition Reminder 12
  - Power Accessory Delay Feature 13
- Door Locks 13
  - Electronic Locking/Unlocking 13
  - Mechanical Release 14
  - Automatic Door Locks 15
- Remote Keyless Entry 15
  - To Unlock The Doors 16
  - To Lock The Doors 17
  - To Unlock The Trunk 17
  - Panic Alarm 17
  - To Use The Panic Alarm 17
  - To Program Transmitters 18
  - General Information 18
  - Transmitter Battery Service 19
- Vehicle Theft Alarm 20

- To Arm The Vehicle Theft Alarm System 20
- Entering The Trunk With The System Armed . . .21
- Security System Disarm 22
- Tamper Alert 23

■ Trunk Safety Warning 23
- Trunk Internal Emergency Release 24

■ Windows 24
- Power Windows 24
- Auto Down Feature 26
- Power Accessory Delay Feature 26
- Wind Buffeting 26

■ Occupant Restraints 26
- Lap/Shoulder Belts 27
- Enhanced Driver Seat Belt Reminder System (BeltAlert) 31
- Six Point Belt System - If Equipped 32
- Seat Belts And Pregnant Women 33
- Seat Belt Extender 33
- Child Restraint 34
- Supplemental Restraint System (SRS) - Airbag . .41

■ Engine Break-In Recommendations 50

■ Safety Tips 51
- Exhaust Gas 51
- Safety Checks You Should Make Inside The Vehicle 51
- Safety Checks You Should Make Outside The Vehicle 52

A WORD ABOUT YOUR KEYS

The dealer that sold you your new Viper has the key code numbers for your vehicle locks. These numbers can be used to order duplicate keys from your dealer or a locksmith. Ask your dealer for these numbers and keep them in a safe place.

Ignition Key

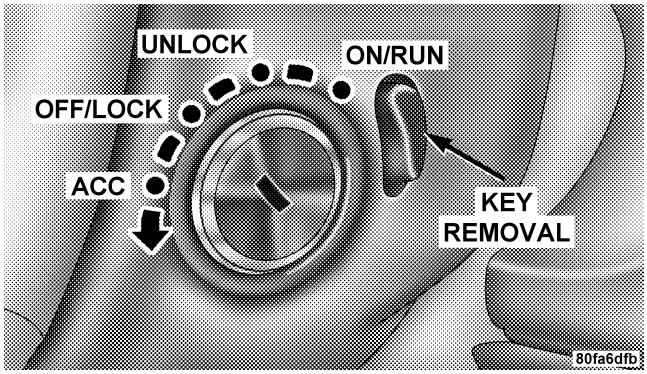

Ignition Key Positions

Press clutch and insert the ignition key fully, then turn the switch to one of the four illustrated positions. It may be difficult to turn the key from the OFF/LOCK position when starting your vehicle. Move the steering wheel left and right while turning the key until it turns easily. To

start the vehicle fully apply the parking brake, press the clutch pedal to the floor, place the gear selector in NEUTRAL, move the key to the ON position, and press the red ENGINE START button located on the instrument panel. To remove the key from the ignition press the clutch pedal to the floor, bring the vehicle to a stop, place the gear selector in gear, and fully apply the parking brake. Then turn the ignition key to the OFF/LOCK position and push the release button behind the ignition and pull the key out.

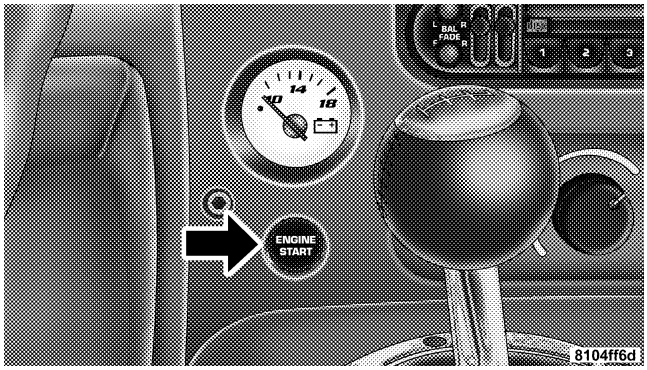

Engine Start Button

Key-In-Ignition Reminder

Opening the driver's door when the key is in the ignition, sounds a signal to remind you to remove the key.

Power Accessory Delay Feature

The Power Accessory Delay feature provides the customer with the ability to operate the power windows, and the radio for 2 minutes after the ignition switch is turned off. If the key is removed from the ignition and the driver door is opened prior to the completion of the 2–minute timer, the feature is immediately cancelled. The Power Accessory Delay feature is initially enabled, but may be enabled or disabled at the dealership.

DOOR LOCKS

WARNING!

Do not touch the exhaust pipe sill covers when entering or exiting your Viper. They can be hot enough to burn you. Observe the warning labels on each door closure panel.

Electronic Locking/Unlocking

This vehicle is equipped with a virtual lock system. If the vehicle is virtually locked, then the Outside door handle is ignored. There is a door lock/unlock switch on each door trim panel. Press this switch to lock or unlock the door. The Odometer displays DOOR UNLOCKED continuously when both doors are unlocked. Also, the door is considered unlocked if the inside door handle is pulled. If only one door is unlocked, then the Odometer

will flash DOOR UNLOCKED every 2 seconds. After about 40 seconds with the ignition off, the display will turn off.

NOTE: If you attempt to lock the doors with the key in the ignition and the driver's door open, the doors will not lock.

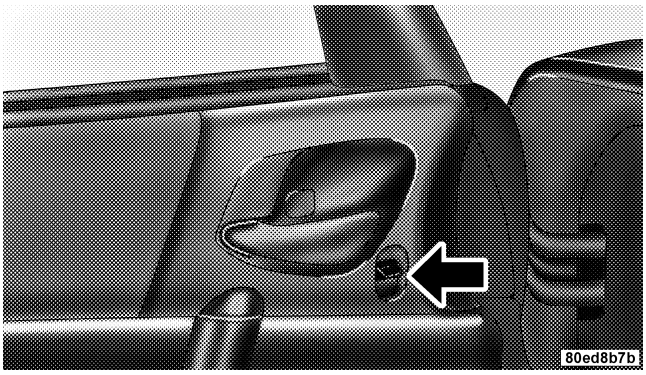

Power Door Lock Switch

Mechanical Release

The driver's door can be opened mechanically by inserting your key into the lock located on the underside of the door panel, beneath the outside mirror.

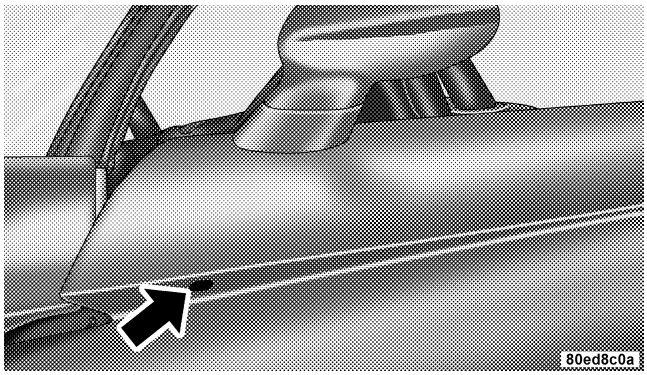

Mechanical Door Lock

Automatic Door Locks

The doors will lock automatically from outside the vehicle when vehicle speed reaches 18 miles per hour with the ignition On and the DOOR UNLOCKED displayed in the odometer will disappear.

NOTE: If the vehicle is moving faster than 5 MPH, the inside and outside door handles are ignored. This does not overide the mechanical cable on the inside door handle.

Automatic lock can be enabled or disabled by performing the following procedure:

1. Close all doors and place the key in the ignition.

2. Cycle the ignition switch between ON/RUN and OFF 4 times ending up in the OFF position.

3. Depress the power door lock switch to lock the doors.

4. A single chime will indicate the completion of the programming and that the feature was toggled ON/OFF.

This feature can also be disabled at the dealership if desired.

REMOTE KEYLESS ENTRY

This feature allows you to lock or unlock the doors from distances up to 23 feet (7 meters) using a hand held transmitter. You do not have to point the transmitter at the vehicle to activate the system.

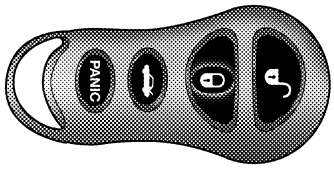

80b31f52

Keyless Entry Transmitter

To Unlock the Doors:

Press and release the UNLOCK button on the transmitter. The front and rear park/turn signal lights will blink once to indicate that only the driver's door is unlocked. When the unlock button is pressed twice, if pressed within 5 seconds, the front and rear park/turn signal lights will blink twice to indicate that both doors are unlocked. DOOR UNLOCKED in the odometer display will blink continuously if one door is unlocked. DOOR UNLOCKED will remain steadily on in the odometer display if both doors are unlocked. No message will be displayed if both doors are locked.

NOTE: The system may be programmed to unlock both doors upon the first press of the Unlock button. To toggle between the first press unlock of the driver's door to unlock both doors, perform the following procedure:

1. Press and hold the Unlock button on the transmitter.

2. Continue to hold the Unlock button, wait at least 4 but no longer than 10 seconds, then press the Lock button.

3. Release both buttons.

The park and tail lights will blink twice to acknowledge the unlock signal.

NOTE: The Lamp Flash can be enabled or disabled by performing the following procedure:

1. Press and hold the Lock button on the transmitter.

2. Continue to hold the Lock button, wait at least 4 but no longer than 10 seconds, then press the Trunk button.

3. Release both buttons.

To Lock the Doors:

NOTE: To enable/disable the Lamp Flash, see procedure described above.

Press and release the LOCK button on the transmitter. The horn will chirp once and the park and tail lights will blink to acknowledge that the door is locked and that the alarm system is armed. The horn chirp can be disabled at the dealership if so desired.

NOTE: The horn chirp feature can be enabled or disabled by performing the following procedure:

1. Press and hold the Lock button on the transmitter.

2. Continue to hold the Lock button, wait at least 4 but no longer than 10 seconds, then press the Unlock button.

3. Release both buttons.

To Unlock the Trunk:

Press and hold the trunk button on the transmitter to unlatch the trunk. The front and rear park/turn signal lights will blink 3 times.

Panic Alarm

The panic alarm unlocks the driver's door, turns on the interior lights, flashes the park and fog lights and sounds the horn for 3 minutes or until the alarm is turned off. Panic mode does not work when the vehicle is driven.

To Use the Panic Alarm:

Press and hold the Panic button to activate the alarm. Press and hold the Panic button or turn the key in the ignition to the RUN position to deactivate the alarm. The alarm will also shut itself off after 3 minutes.

To Program Transmitters:

This feature allows you to program transmitters in case one is lost or an extra transmitter(s) is desired. Up to 4 transmitters can be programmed to your vehicle. To program another transmitter follow these steps:

1. Turn the ignition switch to the ON/RUN position and set the parking brake.

2. Using a previously programmed transmitter, press the UNLOCK button for 5 to 10 seconds. While the UNLOCK button is being pressed (after 5 seconds), press the PANIC button and release both buttons simultaneously. You will hear a chime sound to signal you that programming on the transmitter(s) may occur.

3. You may program up to 4 transmitters for your vehicle within a 30 second time limit. Press and release both LOCK and UNLOCK buttons of a new transmitter at the same time; then press and release any of the buttons once, you will hear a chime when the transmitter has been successfully programmed. A chime will sound when the 30 seconds is over, or if you turn the ignition switch OFF.

4. You must repeat step 3 for all new transmitters that will be used with this vehicle (up to 4 total).

If you do not have a programmed transmitter, contact your dealer for details.

General Information

This transmitter complies with FCC rules part 15. Operation is subject to the following conditions:

1. This device may not cause harmful interference.

2. This device must accept any interference that may be received, including interference that may cause undesired operation.

Transmitter Battery Service

The replacement battery number is 2016. This is a generic battery, readily available at local retail stores.

1. Pry the transmitter halves apart with a coin or similar object.

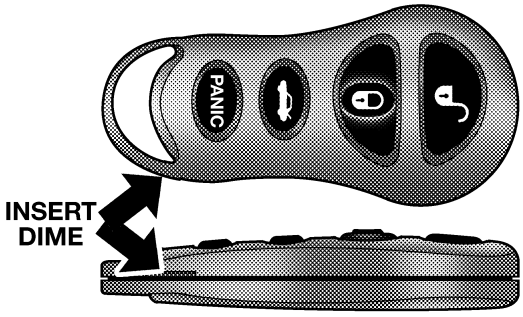

80b31f53

Separating Transmitter Halves

2. Remove and replace the batteries.
3. Reassemble the transmitter case and test operation.

NOTE: If the transmitter is operated more than 255 times out of range of the vehicle (23 feet or 7 meters) or when the vehicle battery is dead, it may become "out of synch". The result is that the transmitter will not function.

To correct this condition, remove the key from the ignition and close the hood and all doors. Press both buttons on the transmitter for about 10 seconds. The horn will chirp once to acknowledge the signal. Normal transmitter operation should resume.

VEHICLE THEFT ALARM

The system monitors the doors, trunk, hood, and ignition for unauthorized operation.

Once the system has been armed, opening any door, trunk (with the ignition key), hood or turning the ignition key to any position will trigger an alarm.

If something triggers the alarm, the system will signal for about 18 minutes. For the first 3 minutes the horn will sound and the park, tail and fog lights will flash. If the condition which triggered the alarm is still present, the park, tail and fog lights will continue to flash for 15 minutes, unless the trigger condition is cleared sooner.

NOTE: The engine will not start until the system is disarmed.

To Arm the Vehicle Theft Alarm System

There are two methods to arm the Vehicle Theft Alarm system:

1. Press the Lock button on the Remote Keyless Entry. The optical and audible horn chirp will sound if it is enabled. (See Remote Keyless Entry section of this manual)

2. Remove the keys from the ignition and, with the door open, press the Lock button on the door trim panel and close the door.

3. After the last door is closed, the security light will flash for 15 seconds. If there is a fault in the system or if the hood or trunk is not closed, the Vehicle Theft Alarm lamp will remain ON steady for 15 seconds until the system is armed. (See the dealer if the system is faulted) The arming sequence will cancel if the door is opened or the ignition is turned on. Opening the hood or trunk will not cancel the arming process.

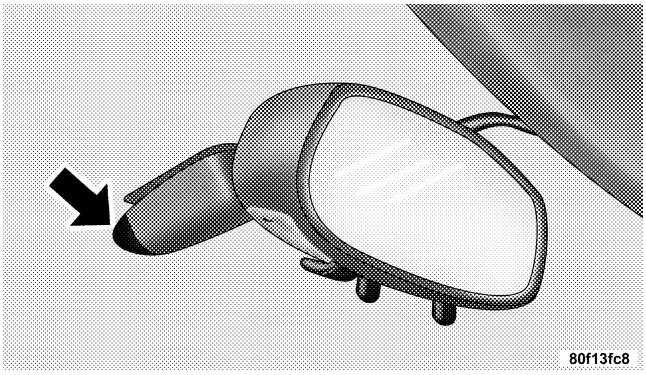

Security Alarm Light

4. The Security light will periodically flash, once every 6 seconds, to show that the system is still armed.

CAUTION!
If the Security lamp flashes twice every 6 seconds, then the vehicle was tampered with!

Entering the Trunk with the System Armed

To enter the trunk with the system armed, the Remote Keyless Entry Trunk button must be pressed. This will pop the trunk open and allow access without alarming or disarming the Vehicle Theft Alarm System.

NOTE: If the key is used and the system is armed, then the Vehicle Theft Alarm System will start alarming.

Security System Disarm

There are two ways to disarm the system:

1. Driver door key cylinder: Insert the key in the cylinder located under the driver's door mirror. This will disarm the Vehicle Theft Alarm System and open the driver's door.

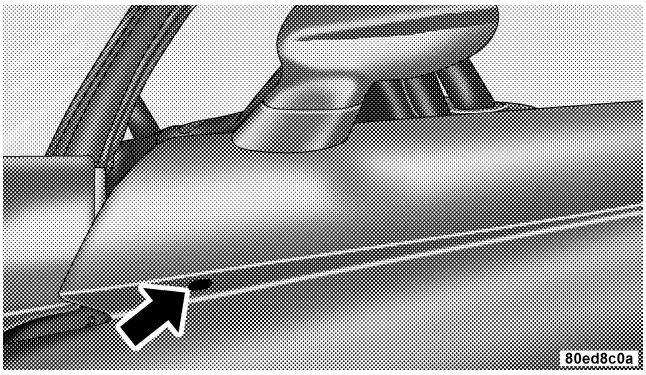

Mechanical Door Lock

2. Or, press the UNLOCK button on the Remote Keyless Entry transmitter. The front and rear park and turn signal lights will flash to acknowledge the signal. (See the Remote Keyless Entry Section of this manual for operation)

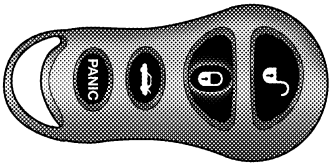

Keyless Entry Transmitter

NOTE: The vehicle will not start unless the Vehicle Theft Alarm System is disarmed by either of the two methods above. Inserting the key in the ignition WILL NOT disarm the system (it will start the alarming process!)

Tamper Alert

If the horn sounds 3 times when you unlock the vehicle using the Remote Keyless Entry transmitter or key, the alarm has been activated. Check the vehicle for tampering.

NOTE: If the Security lamp flashes twice every 6 seconds, then the vehicle was tampered with.

TRUNK SAFETY WARNING

WARNING!

Do not allow children to have access to the trunk, either by climbing into the trunk from outside, or through the inside of the vehicle. Always close the trunk lid when your vehicle is unattended. Once in the trunk, young children may not be able to escape. If trapped in the trunk, children can die from suffocation or heat stroke.

Trunk Internal Emergency Release

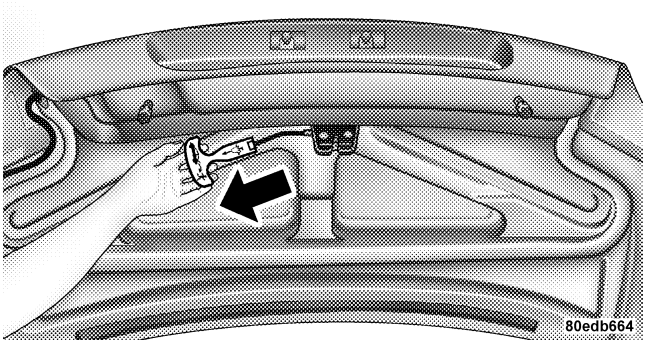

Emergency Release

NOTE: As a security measure, a Trunk Internal Emergency Release lever is built into the trunk latching mechanism. In the event of an individual being locked inside the trunk, the trunk can simply be opened by pulling on the lever attached to the trunk latching mechanism, which is coated so that it glows in a darkened trunk.

WINDOWS

Power Windows

The power window switches are located between the driver and passenger seats on the center tunnel bezel, just to the left of the parking brake. The switch on the left side controls the driver's window and the switch on the right controls the passenger's window. The power window switches are active when the ignition is in RUN or ACCESSORY.

The power window switch also works during accessory delay. This delay feature will allow the windows to be functional up to 2 minutes after the vehicle has been turned off. This feature can be disabled at the dealership if desired.

NOTE: Windows cannot be driven up during accessory delay with a door open.

NOTE: If the windows are completely closed, each respective window will drop slightly when either door is opened. The windows return to their full up position when the door is again closed. This is necessary to clear the seal when either door is opened.

WARNING!
Never leave children in a vehicle, with the keys in the ignition switch. Occupants, particularly unattended children, can become entrapped by the power windows while operating the power window switch. Such entrapment may result in serious injury or death.

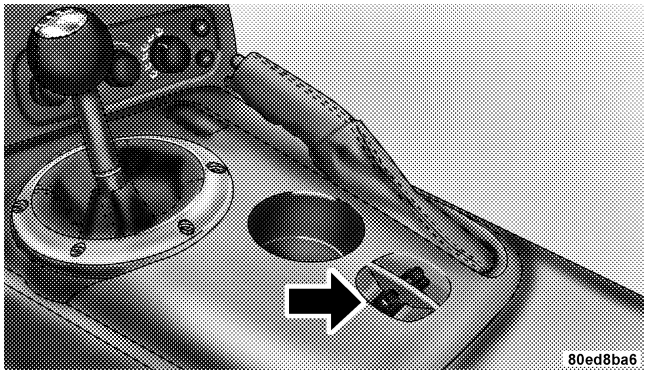

Power Window Switches

Auto Down Feature

Both windows have an auto down feature. Press the window switch to the second detent, release, and the window will go down automatically. Press the switch a second time in either direction to stop the window.

To open the window to a desired position, press and hold the window switch in the first detent until the window has reached the desired position and then release it when you want the window to stop.

Power Accessory Delay Feature

The Power Accessory Delay feature provides the customer with the ability to operate the power windows, and the radio for 2 minutes after the ignition switch is turned off. If the key is removed from the ignition and the driver door is opened prior to the completion of the 2–minute timer, the feature is immediately cancelled. The Power Accessory Delay feature is initially enabled, but may be enabled or disabled at the dealership.

NOTE: The Window Up switch will not function with the door open and while the system is in the Power Accessory Delay mode. If the window is in the process of going up, opening the door will stop the window movement immediately.

Wind Buffeting

Wind buffeting can be described as the perception of pressure on the ears or a helicopter-type sound in the ears. Your vehicle may exhibit wind buffeting with the windows down, or the top down. This is a normal occurrence and can be minimized.

OCCUPANT RESTRAINTS

One of the most important safety features in your Viper is the restraint system. This system consists of the driver's and passenger's seat belts, airbags for the driver and passenger, and a passenger airbag on/off switch located in the center console compartment for deactivating the passenger airbag system.

Please pay close attention to the information in this section. It tells you how to use your restraint system properly to keep you and your passenger as safe as possible. Whichever system you have, all of the warnings in this section apply.

WARNING!

In a collision, you and your passenger can suffer much greater injuries if you are not properly buckled up. You can strike parts of the inside of your vehicle or your passenger, or you can be thrown out of the vehicle. Always be sure you and your passenger are buckled up properly.

Buckle up even though you are an excellent driver. Even on short trips. Someone on the road may be a poor driver and cause a collision that includes you. And this can happen far away from home or on your street.

Research has shown that seat belts save lives. They also can reduce the seriousness of injuries in a collision. Some of the worst injuries happen when people are thrown from the vehicle. Seat belts provide protection against that, and they reduce the risk of injury caused by striking the inside of the vehicle. Everyone in a motor vehicle needs to be buckled up all the time.

Lap/Shoulder Belts

Each seat belt is a combined lap/shoulder belt system. The belt webbing retractor will lock only during very sudden stops or impacts. This feature allows the shoulder part of the belt to move freely with you under normal conditions. But, in a collision, the belt will lock and reduce the risk of your striking the inside of the vehicle or being thrown out.

WARNING!

Wearing a seat belt incorrectly is dangerous. Seat belts are designed to go around the large bones of your body. These are the strongest parts of your body and can take the forces of a collision the best. Wearing your belt in the wrong place could make your injuries in a collision much worse. You might suffer internal injuries, or you could even slide out of part of the belt. Follow these instructions to wear your seat belt safely and to keep your passengers safe, too.

Lap/Shoulder Belt Operating Instructions

1. Enter the vehicle and close the door. Sit back and adjust the seat.

2. The seat belt latch plate is located at the side of your seat back. Grasp the latch plate and pull out the belt.

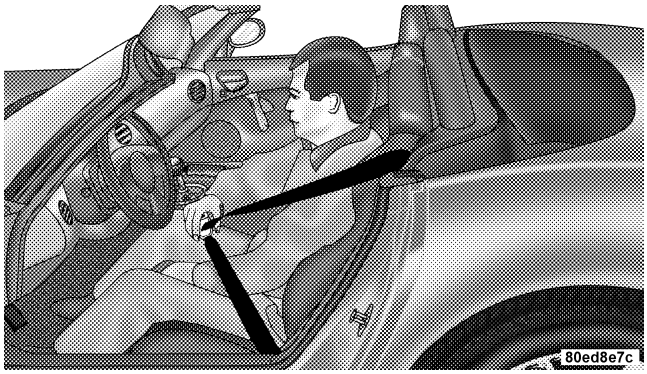

Latch Plate

3. Slide the latch plate up the webbing as far as necessary to make the belt go around your lap.

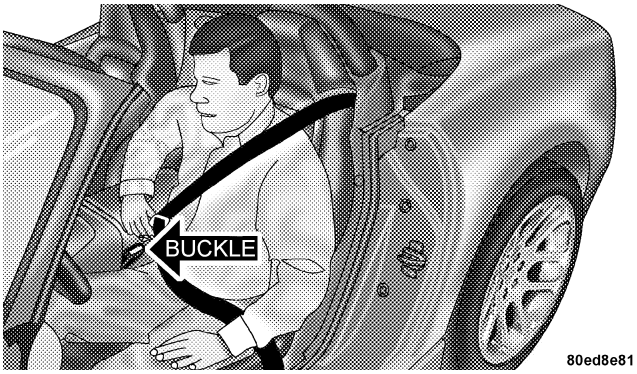

Latch Plate To Buckle

4. When the belt is long enough to fit, insert the latch plate into the buckle until you hear a "click."

WARNING!

A belt that is too loose will not protect you as well. In a sudden stop you could move too far forward, increasing the possibility of injury. Wear your seat belt snugly.

A belt that is worn under your arm is very dangerous. Your body could fall into the inside surfaces of the vehicle in a collision, increasing head and neck injury. And a belt worn under the arm can cause internal injuries. Ribs aren't as strong as shoulder bones. Wear the belt over your shoulder so that your strongest bones will take the force in a collision.

5. Position the lap belt across your thighs, below your abdomen. To remove slack in the lap belt portion, pull up a little on the shoulder belt, as shown.

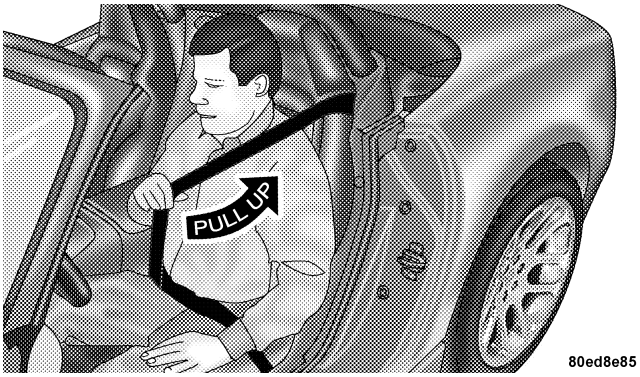

Removing Slack From Belt

6. To loosen the lap belt if it is too tight, tilt the latch plate and pull on the lap belt. A snug belt reduces the risk of sliding under the belt in a collision.

WARNING!

A lap belt worn too high can increase the risk of internal injury in a collision. The belt forces won't be at the strong hip and pelvic bones, but across your abdomen. Always wear the lap belt as low as possible and keep it snug.

7. Position the shoulder belt on your chest so that it is comfortable and not resting on your neck. The retractor will withdraw any slack in the belt.

WARNING!

A twisted belt can't do its job as well. In a collision it could even cut into you. Be sure the belt is straight. If you can't straighten a belt in your vehicle, take it to your dealer and have it fixed.

8. To release the belt, push the red button marked PRESS on the buckle. The belt will automatically retract to its stowed position. If necessary, slide the latch plate down the webbing to allow it to retract fully.

Enhanced Driver Seat Belt Reminder System (BeltAlert)

If the driver's seat belt has not been buckled within 60 seconds of starting the vehicle and if the vehicle speed is greater than 5 mph (8 km/h), the Enhanced Warning System (BeltAlert) will alert the driver to buckle their seat belt. The driver should also instruct all other occupants to buckle their seat belts. Once the warning is triggered, the Enhanced Warning System (BeltAlert) will continue to chime and flash the Seat Belt Warning Light for 96 seconds or until the driver's seat belt is buckled. The Enhanced Warning System (BeltAlert) will be reactivated if the driver's seat belt is unbuckled for more than 10 seconds and the vehicle speed is greater than 5 mph (8 km/h).

The Enhanced Warning System (BeltAlert) can be enabled or disabled by your authorized dealer or by following these steps:

NOTE: The following steps must occur within the first 60 seconds of the ignition switch being turned to the ON or START position. DaimlerChrysler does not recommend deactivating the Enhanced Warning System (BeltAlert).

1. Turn the ignition switch to the OFF position and buckle the driver's seat belt.

2. Start the engine and wait for the Seat Belt Warning Light to turn off.

3. Within 60 seconds of starting the vehicle, unbuckle and then re-buckle the driver's seat belt at least three times within 10 seconds, ending with the seat belt buckled.

NOTE: Watch for the Seat Belt Warning Light to turn on while unbuckling and off while re-buckling the seat belt. It may be necessary to retract the seat belt.

4. Turn off the engine. A single chime will sound to signify that you have successfully completed the programming.

The Enhanced Warning System (BeltAlert) can be reactivated by repeating this procedure.

NOTE: Although the Enhanced Warning System (BeltAlert) has been deactivated, the Seat Belt Warning Light will continue to illuminate while the driver's seat belt remains unbuckled.

Six Point Belt System - If equipped

This six point belt system meets SCCA standards and should be only used when engaged in related performance driving events. The standard lap/shoulder belt should be used whenever the vehicle is operated on the street.

Six Point Belt Operating Instructions

With the anti-submarining belt placed on the seat pointing up, buckle the left and right lap belts and strap both legs. Buckle the left and right shoulder belts. Adjust the belts by pulling on the web ends and/or re-positioning the web clips and straps as required. Release the belts by turning the belt latch mechanism ¼ turn in either the clockwise or counter-clockwise direction.

NOTE: The anti-submarining belt and the shoulder belt are attached to eye bolts at designated locations and should be removed from the vehicle when not in use. The lap belts and straps can be stored behind or to the sides of the seat after removal.

Seat Belts and Pregnant Women

We recommend that pregnant women use the seat belts throughout their pregnancy. Keeping the mother safe is the best way to keep the baby safe.

Pregnant women should wear the lap part of the belt across the thighs and as snug across the hips as possible. Keep the belt low so that it does not come across the abdomen. That way the strong bones of the hips will take the force if there is a collision.

Seat Belt Extender

If a seat belt is too short, even when fully extended, your dealer can provide you with a seat belt extender. This extender should be used only if the existing belt is not long enough.

WARNING!

A frayed or torn belt could rip apart in a collision and leave you with no protection. Inspect the belt system periodically, checking for cuts, frays, or loose parts. Damaged parts must be replaced immediately. Do not disassemble or modify the system. Seat belt assemblies must be replaced after an accident if they have been damaged (bent retractor, torn webbing, etc.)

Child Restraint

Everyone in your vehicle needs to be buckled up all the time, babies and children, too.

WARNING!

In a collision, an unrestrained child, even a tiny baby, can become a missile inside the vehicle. The force required to hold even an infant on your lap could become so great that you could not hold the child, no matter how strong you are. The child and others could be badly injured. Any child riding in your vehicle should be in a proper restraint for the child's size.

All states and Canadian provinces require small children to ride in proper restraint systems. This is the law, and you can be prosecuted for ignoring it.

Infants and Small Children

There are two different sizes and types of restraints for children from newborn size to the bigger child almost large enough for an adult seat belt. Always check the child seat owner's manual to ensure you have the right seat for your child. Use the restraint system that is correct for your child.

Two different child restraint systems are generally available:

- The infant carrier for babies weighing up to approximately 20 lbs. (9 kg).
- The child seat for small children over 20 lbs. (9kg).

WARNING!

A rearward facing infant restraint must not be used in your Viper unless the passenger airbag has been shut off. A rearward facing infant restraint may be struck by a deploying passenger airbag which may cause severe or fatal injury to the infant.

In addition, some manufacturers make systems that can be first used as an infant carrier, then converted to a child seat as the child grows.

Here are some tips on getting the most out of your child restraint.

Before buying any restraint system, make sure that it has a label certifying that it meets Motor Vehicle Safety Standard 213. The manufacturer also recommends that before you buy a child restraint, you try it in the seat where you will use it.

The restraint must be appropriate for your child's weight and height. Check the label on the restraint for this too.

Carefully follow the instructions that came with the restraint. If you install the restraint improperly, it may not work when you need it.

WARNING!

Improper installation can lead to failure of a child restraint. It could come loose in a collision. The child could be badly injured or killed. Follow the manufacturer's directions exactly when installing a child restraint.

- Child restraints are secured in the passenger seat by the lap part of the lap/shoulder belt.

Buckle the child into the seat exactly as the child seat manufacturer's directions tell you. The latch plate on the lap/shoulder belt will keep the belt tight.

When your infant carrier or child seat is not in use, secure it with the seat belt or remove it from the vehicle. Don't leave it loose in the vehicle. In a sudden stop or collision, it could strike occupants and injure them.

LATCH — Lower Anchors and Tether for CHildren

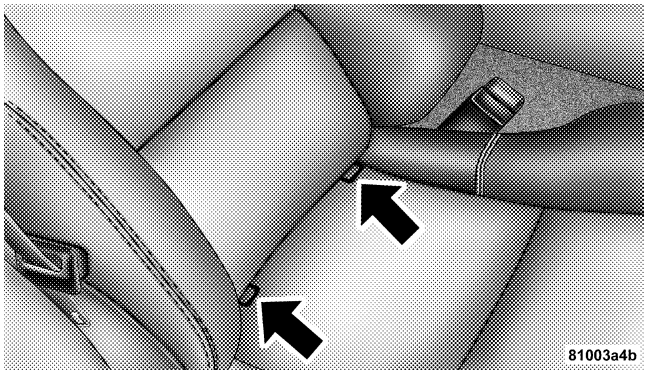

LATCH Anchorages

Your vehicle's passenger seat is equipped with the child restraint anchorage system called LATCH, which stands for Lower Anchors and Tether for Children. The LATCH

system provides for the installation of the child restraint without using the vehicle seat belt. The passenger seat has an exclusive lower anchorage.

These are round bars, located at the lower area of the seat back, one on each side of the passenger seat. You will easily feel them if you run your finger along the intersection of the surface. Install your child seat as per child seat manufacturer recommendations.

NOTE: If your child restraint seat is not LATCH compatible, install the restraint using the vehicle seat belts.

Child Restraint Tether Anchor

Child restraints having tether straps and hooks for connection to tether anchors have been available for some time. In fact, many child restraint manufacturers will provide add-on tether strap kits for some of their older products. There is a tether strap anchor located in the child tether access cover behind the passenger seat.

Remove the child tether access cover by prying either side with a screwdriver or similar tool, as shown in illustration which follows. While the child tether is in use, keep the access cover in a safe place so that it can be replaced after use of the child tether.

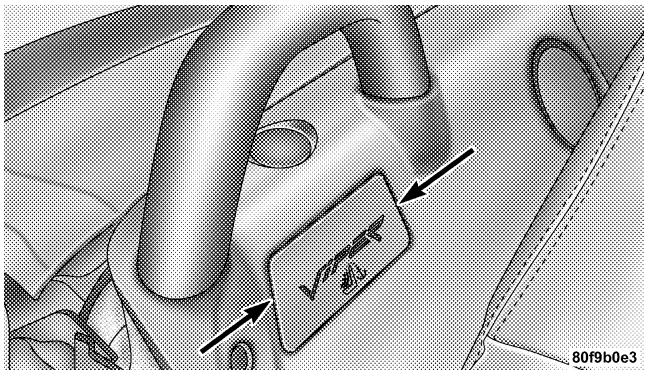

Child Tether Access Cover

To attach the tether strap to the anchor, move the seatback fully forward. Pass the child restraint tether hook through either opening in the seatback under the head restraint. Attach the tether hook to the anchor loop, recline the seatback full rearward and move the seat to its most rearward position. Install the child restraint according to the manufacturer's directions. Return the seatback to an upright position. Remove slack from the tether strap according to the child restraint manufacturer's directions.

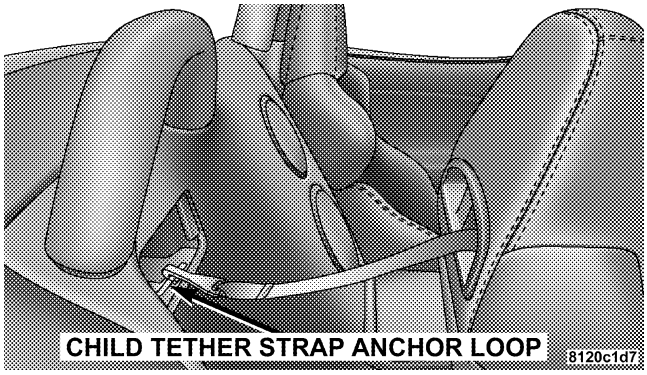

WARNING!

An incorrectly anchored tether strap could lead to increased head motion and possible injury to the child. Use only the anchor position directly behind the child seat to secure a child restraint top tether strap.

Installing Child Restraints Using the Vehicle Seat belt

The passenger side seat belt is equipped with an automatic locking retractor for child restraint system installation. It is designed to keep the lap portion of the restraint tightly held to the passenger seat. Seat belts equipped with automatic locking retractors will have a distinctive label on the webbing.

To restrain the child seat, pull enough webbing from the retractor to allow the belt to pass through the child restraint and slide the latch plate into the buckle. Then, pull on the webbing from the retractor until all of it is extracted. Retract some to the webbing back to the retractor to activate the automatic locking retractor. (See Seat Belt Locking Mode below). Tighten the lap portion of the belt and allow the excess webbing to retract back to the retractor. If it still does not make the child restraint secure, try different seating positions in addition to securing the child restraint with the LATCH restraint system.

Seat Belt Locking Mode

The seat belts for both occupants are equipped with emergency locking retractors for normal use. They are activated during very sudden stops or impacts and are set in emergency locking mode. However, the passenger side seat belt is also equipped with an automatic locking retractor to secure child restraint systems. It can also be converted to set the seat belt in the emergency locking mode.

To convert the emergency locking mode to automatic locking mode for seat belts equipped with automatic locking retractors, grasp on the shoulder belt portion of the belt and pull all of the webbing out of the retractor. By allowing some of the webbing to retract back into the retractor, you will hear a clicking sound indicating that the belt is now activated to automatic locking mode.

Once it is in the automatic locking mode you will not be able to pull any more of the webbing out of the retractor, but will only be able to feed back excess webbing to secure the child restraint. To disengage the automatic locking mode, simply allow all of the webbing to retract back into the retractor which will switch the seat belt to emergency locking mode for normal use.

Children Too Large For Child Seats

Children who are too large for child seats and who can sit upright by themselves should use the lap/shoulder belt for best protection.

- Make sure that the child is seated upright in the seat.
- The lap belt should be low on the hips and as snug as possible.
- Check belt fit periodically. A child's squirming or slouching can move the belt out of position.
- If the shoulder belt contacts the face or neck, move the child closer to the side of the vehicle.

Booster seats that may help overcome this problem are also available for use with lap/shoulder belts. Before buying a booster seat, make sure that it has a label certifying that it meets applicable Motor Vehicle Safety Standards. Make sure that it is satisfactory for use in this vehicle.

Supplemental Restraint System (SRS) - Airbag

This vehicle has airbags for the driver and passenger as a supplement to the seat belt restraint systems. The driver's airbag is mounted in the steering wheel. The passenger side airbag is mounted in the instrument panel, under a cover marked SRS/AIRBAG. These airbags inflate in higher speed impacts. They work with the instrument panel knee bolsters and the seat belts to provide improved protection for the driver and right front passenger.

WARNING!

- **Relying on the airbags alone could lead to more severe injuries in a collision. The airbags work with your seat belt to restrain you properly. In some collisions the airbags won't deploy at all. Wear your seat belts even though you have airbags.**
- **Being too close to the steering wheel or instrument panel during airbag deployment could cause serious injury. Airbags need room to inflate. Sit back, comfortably extending your arms to reach the steering wheel or instrument panel.**

The seat belts are designed to protect you in many types of collisions. The airbags deploy only in frontal collisions and will not deploy in collisions at slow speed. But even

in collisions where the airbags deploy, you need the seat belts to keep you in the right position for the airbags to protect you properly.

Here are four simple steps you can take to minimize the risk of harm from a deploying airbag.

1. **Infants in rear facing child safety seats designed for children up to one year or approximately 20 pounds (9 kg) should never ride in the front seat of a vehicle with a passenger side airbag unless the airbag is shut OFF.** See "Passenger Side Airbag On/Off Switch." An airbag deployment can cause severe injury or death to infants in this position.

Children that are not big enough to properly wear the vehicle seat belt (see section on "Child Restraint") should be secured in child safety seats or booster seats.

Older children who do not use child safety seats or booster seats should ride properly buckled.

Never allow children to place the shoulder belt behind them or under the arm.

Infants up to 1 year or approximately 20 pounds (9 kg) should never ride in the vehicle, because the rear facing child seat places them too close to the passenger air bag in the event of a crash.

Children from 1 to 12 years old: Move the passenger seat as far back as possible. Children from 20 to 60 pounds (9 kg to 27 kg) should be secured in the appropriate child safety seat or booster seat. If too large for a booster seat, the child should wear the lap/shoulder belt properly. Children should never be allowed to lean forward toward the instrument panel as a passenger air bag deployment could cause severe injury or death to a child in this position.

You should read the instructions provided with your child restraint to make sure that you are using it properly.

2. **All occupants should wear their lap and shoulder belts properly.**

3. **The driver and passenger seats should be moved back as far as practical to allow the airbags room to inflate. Additionally, the pedals are power adjustable, so the driver seat can be moved back and the pedals moved closer as needed so the driver can be as far from the airbag as possible. (See section on Power Adjustable Pedals for operation.)**

4. **You should read the instructions provided with your child safety or booster seat to make sure that you are using it properly.**

The airbag system consists of the following:

- Airbag control module and internal crash sensor
- AIRBAG Readiness Light
- Driver and Passenger Airbag/inflator Units
- Passenger Side Airbag On/Off Switch
- Passenger Airbag Off Indicator Light
- Unique Steering Wheel and Column
- Unique Instrument Panel
- Interconnecting Wiring
- Knee Impact Bolster

How The Airbag System Works

- A crash sensor in the occupant compartment determines if a frontal impact is severe enough to require the airbag. The sensor will not detect side, roll over, or rear impacts. The crash sensor is connected to the diagnostic unit and to the airbag/inflator unit.
- The Diagnostic Unit monitors the readiness of the electronic parts of the system whenever the ignition switch is in the START or RUN position. These include all of the items listed above except the knee bolster, the instrument panel, and the steering wheel and column. The Diagnostic Unit also turns on the AIRBAG light in the instrument panel for 6 to 8 seconds when the ignition is first turned on, then turns the light off. If it detects a malfunction in any part of the system, it turns on the light either momentarily or continuously.
- The Airbag/Inflator Units are in the center of the steering wheel and in the instrument panel. The words SRS/AIRBAG are embossed on the airbag covers.

WARNING!

Ignoring the AIRBAG light in your instrument panel could mean you won't have the airbags to protect you in a collision. If the light does not come on, stays on after you start the vehicle, or if it comes on as you drive, have the airbag system checked right away.

WARNING!

Do not put anything on or around the airbag covers or attempt to manually open them. You may damage the airbags and you could be injured because the airbags are not there to protect you. These protective covers for the airbag cushions are designed to open only when the airbags are inflating.

- When the crash sensors detect an impact requiring the airbags, they signal the inflator units. A large quantity of non toxic nitrogen gas is generated to inflate the airbags. The airbag covers separate and fold out of the way as the airbags inflate to their full size. The airbags fully inflate in about 50 milliseconds. This is only about half of the time it takes you to blink your eyes. The airbags then quickly deflate while helping to restrain the driver and right front passenger. The airbag gas is vented through the airbag material towards the instrument panel. In this way the airbags do not interfere with your control of the vehicle.
- The Knee Impact Bolsters help protect the knees and position you for the best interaction with the airbags.

If A Deployment Occurs

The airbag system is designed to deploy when the impact sensors detect a moderate to severe frontal collision, to help restrain the driver and right front passenger, and then to immediately deflate.

NOTE: A frontal collision that is not severe enough to need airbag protection will not activate the system. This does not mean something is wrong with the airbag system.

If you do have a collision which deploys the airbags, any or all of the following may occur:

- The nylon airbag material may sometimes cause abrasions and/or skin reddening to the driver and right

front passenger as the airbags deploy and unfold. The abrasions are similar to friction rope burns or those you might get sliding along a carpet or gymnasium floor. They are not caused by contact with chemicals. They are not permanent and normally heal quickly. However, if you haven't healed significantly within a few days, or if you have any blistering, see your doctor immediately.

- As the airbags deflate you may see some smoke-like particles. The particles are a normal by-product of the process that generates the non toxic nitrogen gas used for airbag inflation. These airborne particles may irritate the skin, eyes, nose, or throat. If you have skin or eye irritation, rinse the area with cool water. For nose or throat irritation, move to fresh air. If the irritation continues, see your doctor. If these particles settle on your clothing, follow the garment manufacturer's instructions for cleaning.
- Your vehicle may be safely driveable after the airbags deploy. If so, you can tuck the deployed airbags inside the opening in the steering wheel hub and instrument panel trim covers to make driving somewhat easier.

WARNING!

Deployed airbags can't protect you in another collision. Have the airbags replaced by an authorized dealer as soon as possible.

Passenger Side AirBag On/Off Switch

The passenger airbag is to be turned off only if the passenger:

- is an infant (less than 1 year old) who must ride in the front seat because there is no rear seat, because the rear seat is too small for a rear-facing infant restraint or

because the infant has a medical condition which makes it necessary for the driver to be able to see the infant,

- is a child, age 1 to 12 who must ride in the front seat because there is no rear seat, because there is no rear seat position available, or because the child has a medical condition which makes it necessary for the driver to be able to see the child,
- has a medical condition which makes passenger airbag inflation (deployment) a greater risk for the passenger than the risk of hitting the dashboard (instrument panel) or windshield in a crash.

If the airbag is turned off when there is any other occupant at that position, the supplemental restraint provided by the airbag will not be available.

To turn OFF the passenger side airbag, use the on/off switch located in the center console.

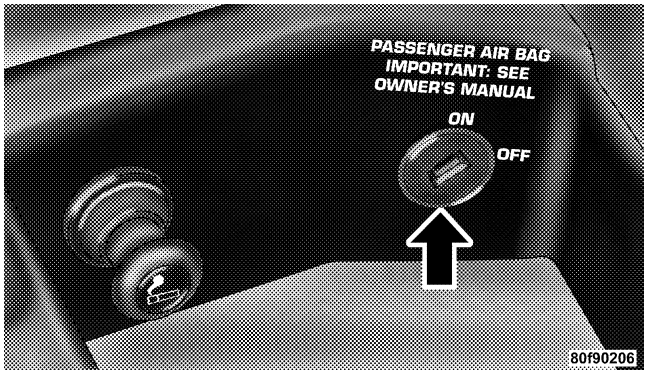

Passenger Airbag ON/OFF Switch

NOTE: When the passenger airbag is turned off the airbag off light will illuminate

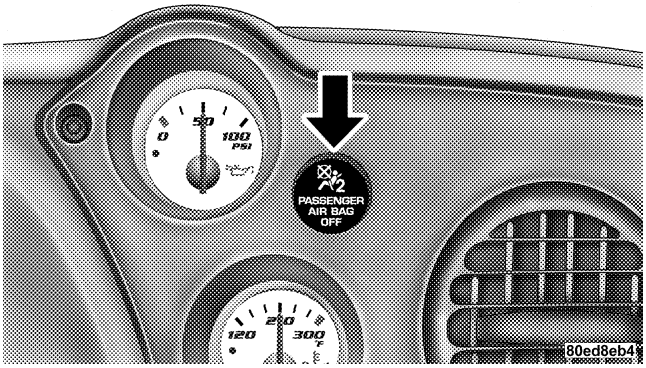

Passenger Airbag Off Light

To Shut Off the Passenger Airbag:

- Place only the tip of the ignition key in the on/off switch, turn the key clockwise, and remove the key from the switch. This will shut off the passenger side airbag. The PASS AIRBAG OFF light on the instrument panel will illuminate when the ignition switch is turned to the ON position.

To Turn On The Passenger Airbag:

- Place the ignition key in the on/off switch, turn the key counterclockwise, and remove the key from the switch. This will turn on the passenger side airbag. The light on the instrument panel will be off when the ignition switch is turned to the ON position.

WARNING!

The airbag may malfunction and serious injury could result if key is left in the airbag shut off switch. Always remove the key.

Maintaining Your Airbag System

WARNING!

- **Modifications to any part of the airbag system could cause it to fail when you need it. You could be injured because the airbag is not there to protect you. Do not modify the components or wiring, including adding any kind of badges or stickers to the airbag covers. Do not modify the front bumper or vehicle body structure.**
- **You need proper knee impact protection in a collision. Do not mount or locate any aftermarket equipment on or behind the knee impact bolsters.**
- **You can be injured if you are too close to either airbag cover when the airbags inflate. It is dangerous to try to repair any part of the airbag system yourself. Don't try to repair the airbag system. Be sure to tell anyone who works on your vehicle that it has airbags.**

You will want to have the airbags ready for your protection in a collision. While the airbag Supplemental Restraint System (SRS) is designed to be maintenance free, if any of the following occurs, have an authorized dealer service the system immediately.

- The AIRBAG light does not come on or flickers during the 6 to 8 seconds when the ignition switch is first turned on.
- The light remains on or flickers after the 6 to 8 second interval.
- The light flickers or comes on and remains on while driving.

Transporting Pets

Deploying airbags could harm your pet. An unrestrained pet will be thrown about and possibly injured, or injure a passenger during panic braking or in a collision.

Pets should be restrained in pet harnesses or pet carriers that are secured by seat belts.

ENGINE BREAK-IN RECOMMENDATIONS

The engine in your new Viper does not require a long break-in period. Following these few simple guidelines is all that is necessary for a good break-in:

For the first 500 miles (800 km):

- Keep your vehicle speed below the legal, posted speed limit and your engine speed below 4,000 rpm.
- Avoid driving at a constant speed, either fast or slow, for long periods of time.
- Do not make any full throttle starts and avoid full throttle acceleration.
- Use the proper gear for your speed range.
- Wait until the engine has reached normal operating temperature before driving at the recommended maximum break-in speed.
- Avoid excessive idling.
- Check the engine oil level at every fuel fill.

NOTE: A new engine will consume some oil during the first few thousand miles of operation. This should be considered as a normal part of the break-in and not interpreted as a sign of difficulty.

SAFETY TIPS

Exhaust Gas

WARNING!

Exhaust gases can injure or kill. They contain carbon monoxide (CO) which is colorless and odorless. Breathing it can make you unconscious and can eventually poison you. To avoid breathing (CO) follow the safety tips below.

- Do not run the engine in a closed garage or in confined areas any longer than needed to move your vehicle in or out of the area.
- If it is necessary to sit in a parked vehicle with the engine running, adjust your heating or cooling controls to force outside air into the vehicle. Set the blower at high speed.

Safety Checks You Should Make Inside the Vehicle

Seat Belts

- Inspect the belt system periodically, checking for cuts, frays and loose parts. Damaged parts must be replaced immediately. Do not disassemble or modify the system.
- Seat belt assemblies must be replaced after an accident if they have been damaged (bent retractor, torn webbing, etc.). If there is any question regarding belt or retractor condition, replace the belt.

Defrosters

Check operation by selecting the defrost mode and place the blower control on high speed. You should be able to feel the air directed against the windshield.

Safety Checks You Should Make Outside the Vehicle

Tires

Examine tires for excessive tread wear or uneven wear patterns. Check for stones, nails, glass, or other objects lodged in the tread. Inspect for tread cuts or side wall cracks. Check wheel nuts for tightness and tires for proper pressure.

Lights

Have someone observe the operation of exterior lights while you work the controls. Check turn signal and high beam indicator lights on the instrument panel.

Fluid Leaks

Check area under vehicle after overnight parking for fuel, water, oil, or other fluid leaks. Also, if gasoline fumes are present, the cause should be corrected immediately.

UNDERSTANDING THE FEATURES OF YOUR VEHICLE

CONTENTS

■ Convertible Top Operation 55
- □ To Lower The Top 56
- □ To Raise The Top 56
- □ Convertible Top Boot Cover Installation–If Equipped 59
- □ Convertible Top Boot Cover Removal And Storage 64

■ Console Features 66

■ Mirrors 67
- □ Inside Day/Night Mirror 67
- □ Electric Remote Control Mirrors 68
- □ Mirror Adjustment 68

■ Seats 69
- □ Manual Front Seat Adjustments 69
- □ Reclining Seat 71

■ To Open And Close The Hood 71

■ Lights 73
- □ Courtesy/Reading Lights 73
- □ Interior Lights 74

- Multi-Function Control Lever 74
- Headlights, Parking Lights, Instrument Panel Lights, And Front Fog Lights 75
- Daytime Running Lights 76
- Lights-On Reminder 76
- Headlight Time Delay 76
- Battery Saver Feature — Exterior Lights 76
- Fog Lights 77
- Turn Signals 77
- Highbeam/Lowbeam Select Switch 78
- Flash To Pass 78

■ Tilt Steering Column 78

■ Adjustable Pedals 79
- Adjustable Left Foot Rest 80

■ Windshield Wipers And Washers 81
- Windshield Washers 82
- Mist Function 82
- Intermittent Wiper System 82

CONVERTIBLE TOP OPERATION

WARNING!

The convertible top does not provide the structural protection that a reinforced metal roof does, and the fabric top cannot be expected to prevent the ejection of the occupants of a vehicle in a collision. Therefore it is important that all occupants wear their seat belts at all times when riding in a convertible. Studies have shown that it is generally safer to remain inside a vehicle during a collision, than to be ejected from the vehicle.

CAUTION!

To fully insure that no damage occurs, be sure that the vehicle is at a complete stop with the gear selector in the Park position (automatic transaxle) or in the Neutral position (manual transaxle) before lowering or raising the top.

CAUTION!

Do not operate the convertible top with ice or snow build-up on the top. Damage to the top may occur.

To Lower the Top:

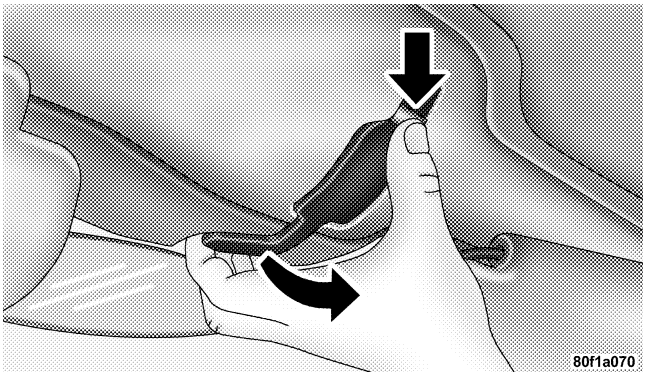

Unlatching Convertible Top

1. To lower the top, first ensure that the door windows are lowered at least an inch.

2. Depress the button at the top of the latch upwards and then pull the handle down and rearward, towards you. (See the picture shown)

3. Disengage the latch hook from the windshield rod making sure to pull the latch all the way back to the detent stow position and pull the top away from the windshield header.

4. Open the trunk.

5. Pull the convertible top back away from the windshield and all the way back to the folded position into the storage well to the back of the seating positions. Push the leading edge of the top down to engage the downstack latch.

6. Finally lower and close the trunk.

To Raise the Top:

1. To raise the convertible top, first ensure that the door windows are lowered at least an inch.

2. Then open the trunk.

3. Release the lever located behind the driver's seat and nestled in the folded convertible top (as pictured). To aid in disengaging the latch, press down on the convertible top while pressing on the latch lever.

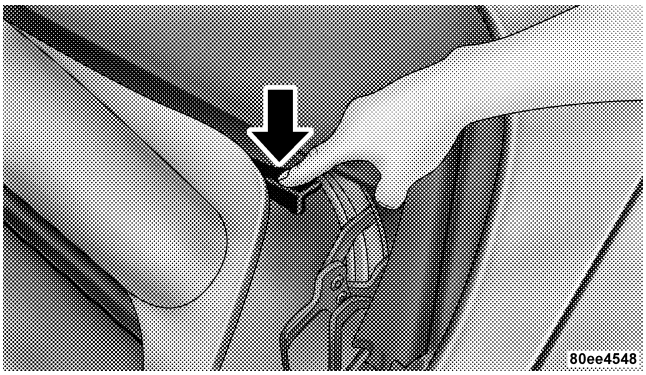

Convertible Top Latch

4. Manually raise the top until it meets the windshield header (as pictured).

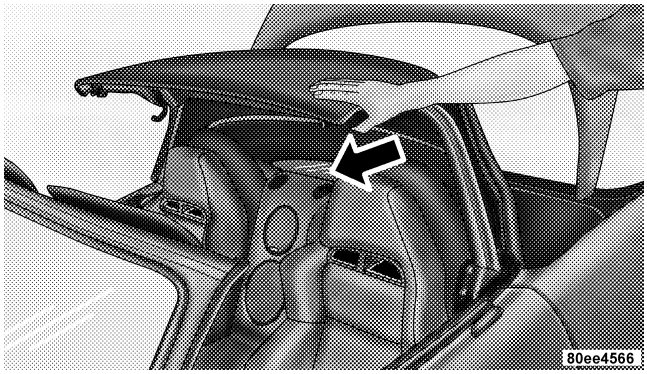

Raising Convertible Top

5. Close the trunk.

6. While sitting inside the vehicle, hold onto the handles and pull the top towards the windshield header. Push the latch handle forward and engage the latch hook to the windshield receiver rod.

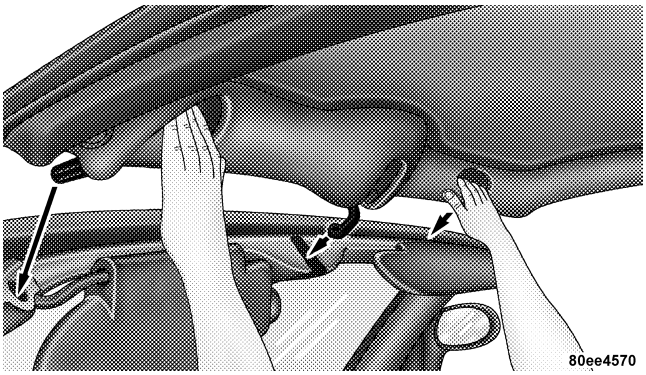

Aligning Convertible Top

7. Ensure the outboard locating pins are in their respective receiving holes in the windshield header. Push the latch handle forward all the way to close the latch.

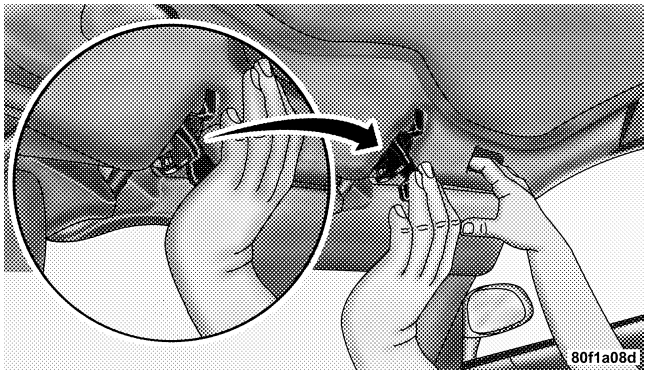

Engaging Convertible Top

NOTE: Until the convertible top system has had adequate time to break in, it may take greater effort to

engage the latch hook and close the latch. Several weeks of normal convertible top usage will reduce these efforts.

Convertible Top Boot Cover Installation–If Equipped

1. Open the trunk.

2. Lower the convertible top and make sure that the convertible top latch handle is placed in the stowed position.

3. lay the unfolded boot cover across the convertible top.

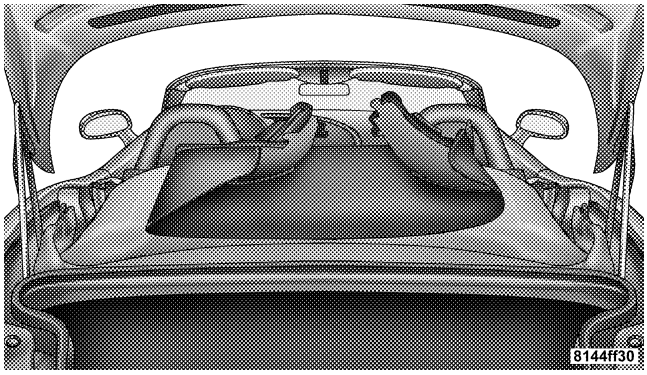

Unfolded Boot Cover

4. Slide pocket over the front corner of convertible top on the passenger side.

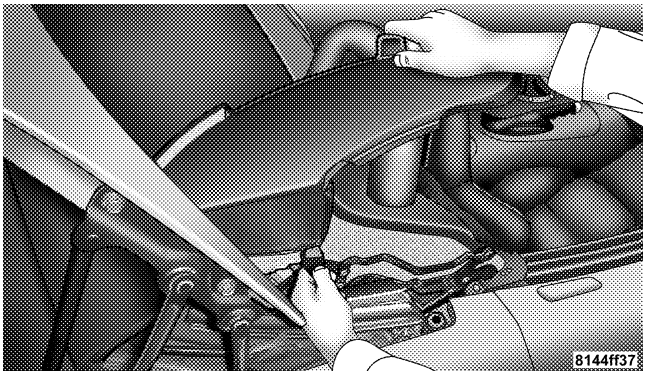

Attaching Passenger Side

5. Stretch and slide pocket over the front corner of convertible top on the driver side.

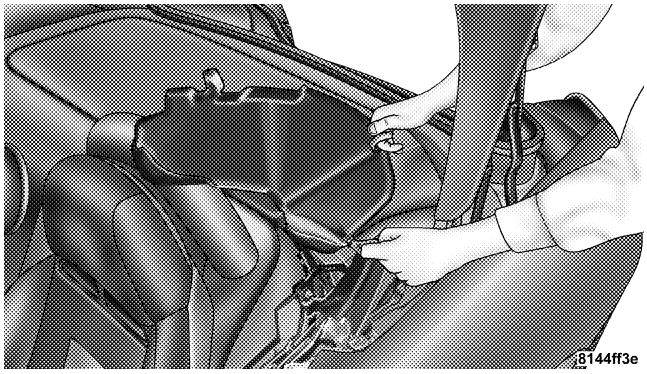

Attaching Driver Side

6. Tuck cover under leading edge of convertible top.

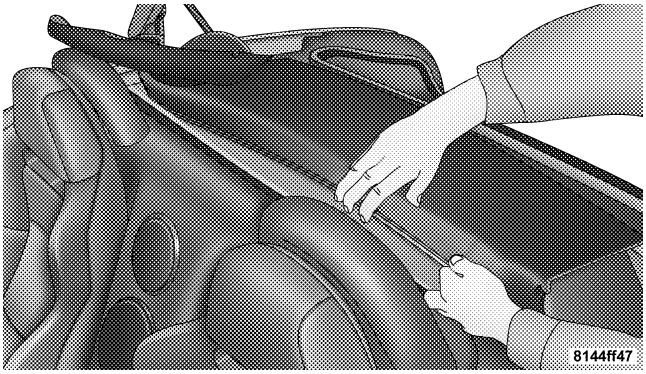

Tucking Boot Cover

7. Clip tab under trunk lid stop and quarter panel flange on outer edge on the passenger side.

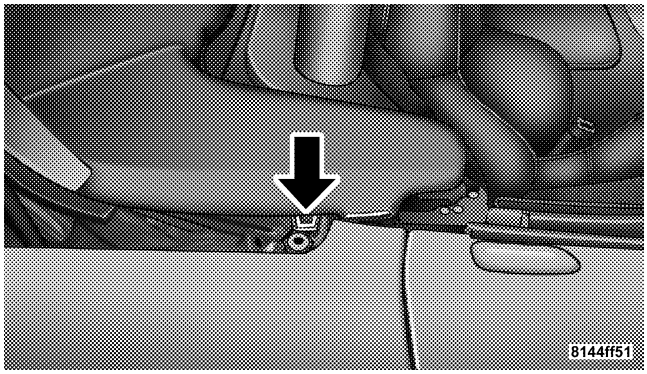

Attaching Passenger Side Tab

8. Push down to engage inboard tab on the passenger side.

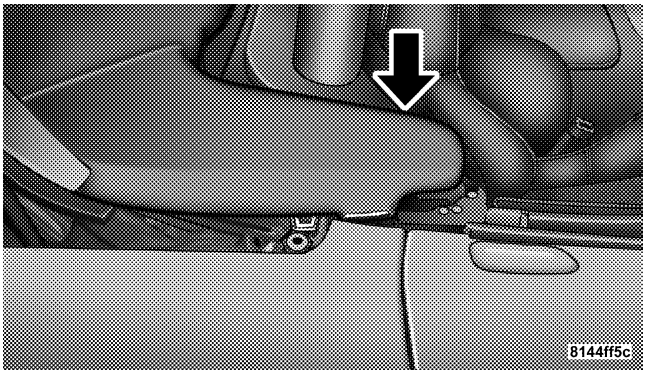

Engaging Passenger Side Tab

9. Clip tab under trunk lid stop and quarter panel flange on outer edge on the driver side.

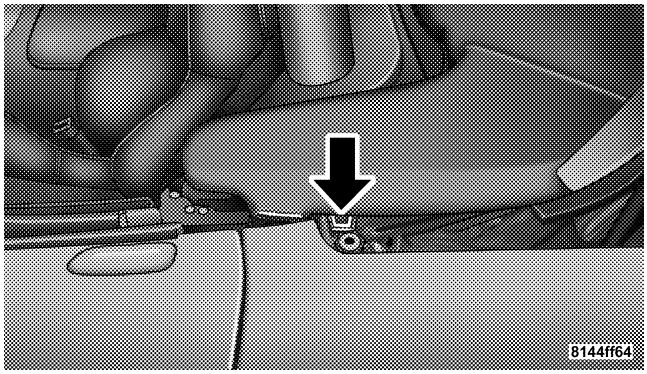

Attaching Driver Side Tab

10. Push down to engage inboard tab on the driver side. Push down on convertible top behind driver seat to lock down.

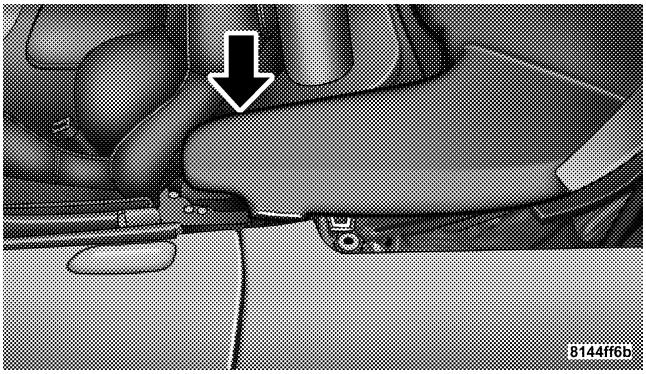

Engaging Driver Side Tab

11. Stretch out and smooth cover from rear of vehicle. Close the trunk lid.

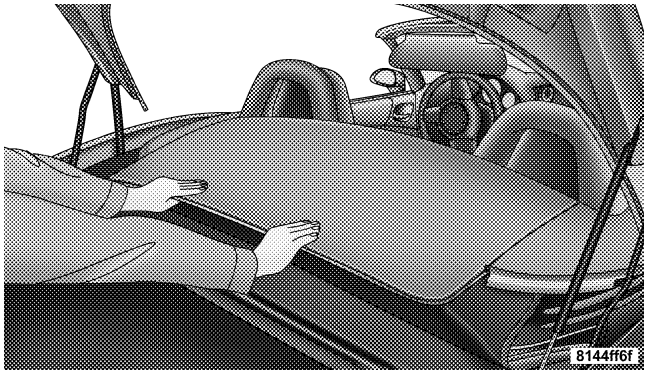

Stretching and Smoothing Cover

12. Ensure that the forward edge of the convertible top boot is tucked in fully after the trunk is closed.

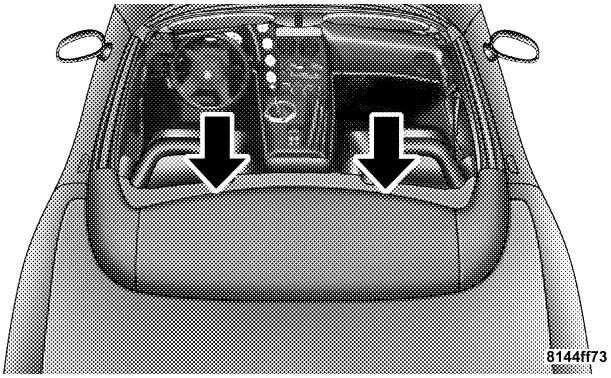

Forward Edge

Convertible Top Boot Cover Removal and Storage

1. Open the trunk.

2. Pull up to disengage the inboard tab on the driver side.

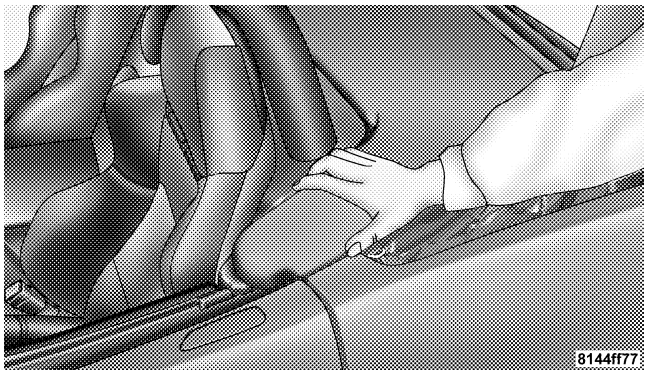

Disengaging Driver Side Tab

3. Pull up to disengaging the inboard tab on the passenger side.

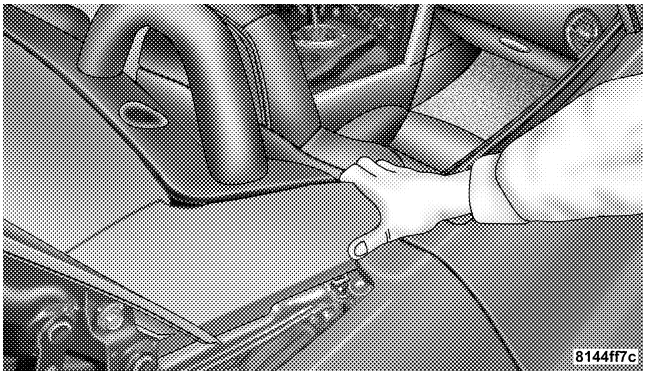

Disengaging Passenger Side Tab

4. Fold each of the outer edges of the convertible top cover inward.

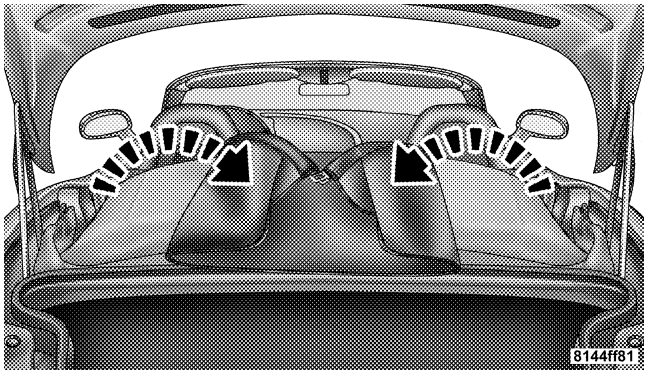

Folding Outer Edges

5. Fold the convertible top cover again. Place the cover into the bag. Store the cover in the trunk or a dry secure area.

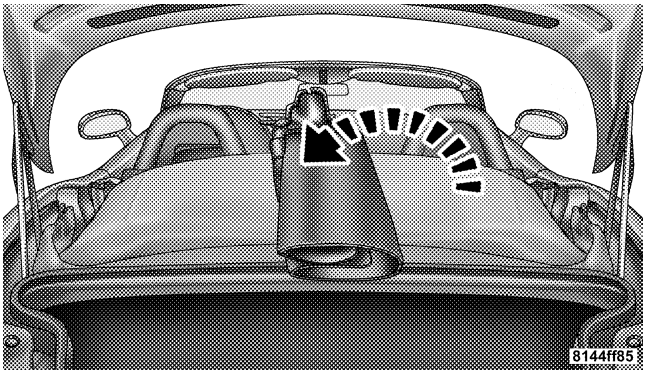

Folding Boot Cover

CONSOLE FEATURES

The front console has a removable ashtray, power outlet/cigarette lighter and power window switches.

The center console compartment is equipped with a cigarette lighter/power outlet and a passenger airbag on/off switch.

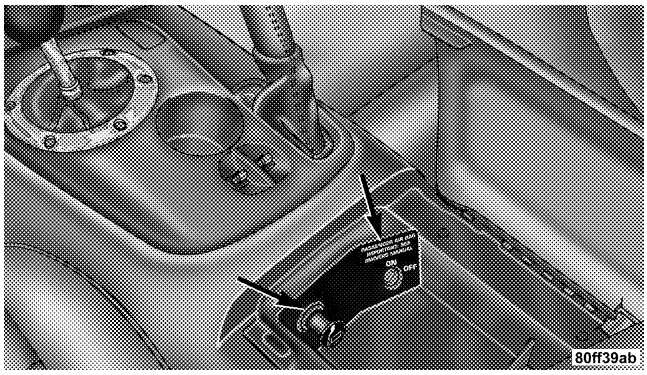

Console

MIRRORS

Inside Day/Night Mirror

Adjust the mirror to center on the view through the rear window. A pivot system allows for horizontal and vertical mirror adjustment.

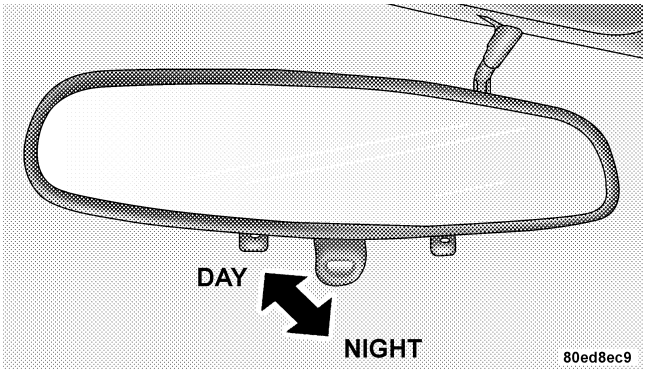

Adjusting Rearview Mirror

Annoying headlight glare can be reduced by moving the small control under the mirror to the night position (toward rear of vehicle). The mirror should be adjusted while set in the day position (toward windshield).

Electric Remote Control Mirrors

Both of the outside mirrors can be adjusted by using the remote controls mounted inside the driver's door, below the door handle and power door switch.

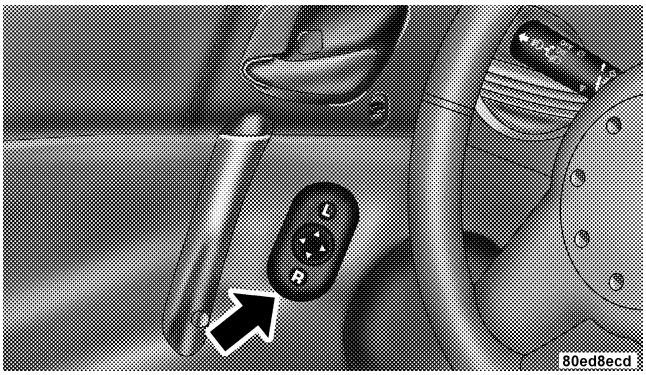

Power Mirror Controls

NOTE: Place the mirror selector switch in the center (neutral) position to prevent accidental movement of the mirrors.

Mirror Adjustment

Outside Mirror — Driver's Side

Adjust the outside mirror to center on the adjacent lane of traffic, with a slight overlap of the view obtained on the inside mirror.

Right Side Mirror

Adjust the convex outside mirror so you can just see the side of your vehicle. This type of mirror will give a much wider view to the rear, and especially of the lane next to your vehicle.

WARNING!

Vehicles and other objects seen in the right side convex mirror will look smaller and farther away than they really are. Relying too much on your right side mirror could cause you to collide with another vehicle or other object. Use your inside mirror when judging the size or distance of a vehicle seen in this convex mirror.

SEATS

Manual Front Seat Adjustments

The adjusting bar is at the front of the seats, near the floor. Pull the bar up to move the seat to the desired position.

Using body pressure, move forward and rearward on the seat to be sure the seat adjusters have latched.

WARNING!

Adjusting a seat while the vehicle is moving is dangerous. If you are driving, the sudden movement of the seat could cause you to lose control. You could be injured. Adjust any seat only while the vehicle is parked. Do not ride with the seatback reclined so that the shoulder belt is no longer riding against your chest. In a collision you could slide under the seat belt and be seriously or even fatally injured. Use the recliner only when the vehicle is parked.

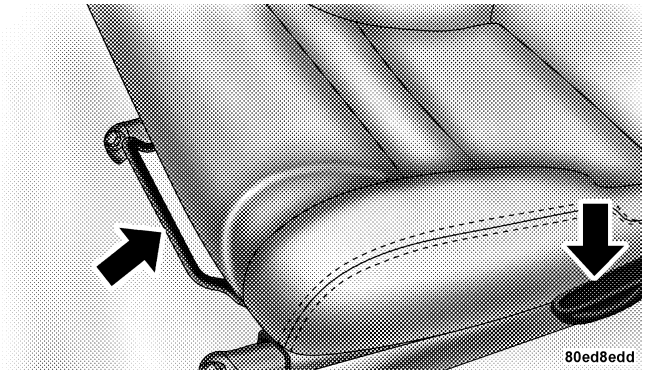

Manual Seat Controls

Reclining Seat

The recliner control is on the side of the seat on the door-side. To recline, lean forward slightly before pulling the lever, then lean back to the desired position, and release the lever. Lean forward and pull the lever to return the seatback to its original position.

To Open And Close The Hood

Two latches must be released to open the hood. First, reach into the lower right grille opening and pull the primary hood latch forward. Raise the front of the hood slightly for access to the safety catch.

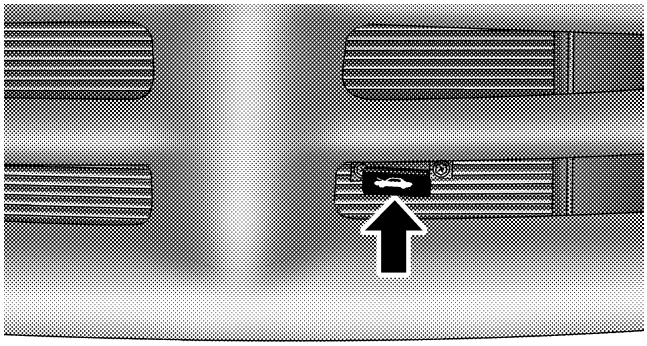

Hood Release Lever

Then push the safety catch handle located under the front edge of the hood toward the right. Raise the front of the hood.

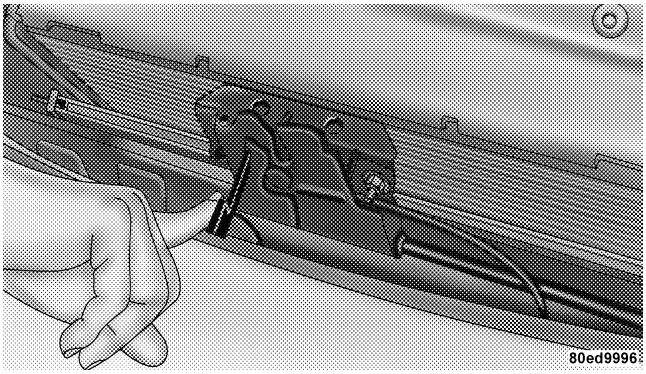

Hood Safety Catch

NOTE: Assist props will raise the hood to a normal customer usage position. If greater access is required, the hood may be pushed up at the front, raising the hood beyond the initial opening height. Simply pull the hood down to close it.

CAUTION!

Do not leave the hood open in areas where strong gusts of wind are likely. Such a place might be by the side of the road where large trucks pass by. Strong gusts of wind may damage your hood. Always close the hood in such situations.

WARNING!

If the hood is not fully latched, it could open when the vehicle is moving and block your forward vision. Be sure the hood latches are fully latched before driving.

LIGHTS

Courtesy/Reading Lights

These lights, located under the rearview mirror, come on whenever a door is opened or the illuminated entry system is activated. The lights can also be turned on with the doors closed by means of switches located on the bottom of the rearview mirror. These lights also function by rotating the dimmer control in the multi-function control lever.

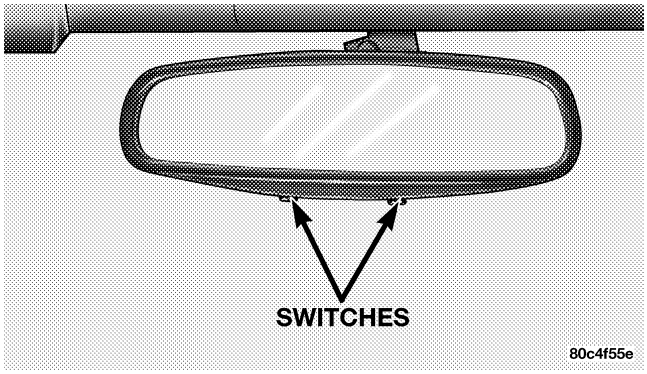

Courtesy/Reading Light Switches

There are also courtesy lights located in both the driver and passenger footwell areas. They will turn on as part of the illuminated entry system by either opening a door, unlocking the door from the remote keyless entry, or by the multi-function control lever dimmer control.

Interior Lights

The interior lights come on when a door is opened and the dome switch is not in the defeat position.

Battery Saver Feature — Interior Lights

The interior courtesy lights come on when a door is open or left ajar. To prevent battery drain, if you leave a door open or ajar, these lights will turn off after 15 minutes. After you close the door, the interior courtesy lights will again function in the normal manner.

Multi-Function Control Lever

The Multi-Function Control Lever controls the operation of the headlights, parking lights, turn signals, headlight beam selection, instrument panel light dimming, interior lights, the passing lights, and fog lights. The lever is located on the left side of the steering column.

Dimmer Control

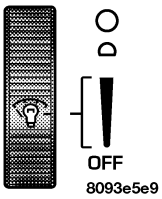

With the parking lights or headlights on, rotating the dimmer control for the interior lights on the Multi-Function Control Lever upward will increase the brightness of the instrument panel lights.

Dome Light Position

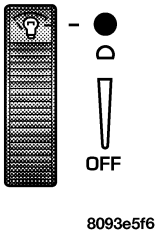

Rotate the dimmer control completely upward to the second detent to turn on the interior lights. The interior lights will remain on when the dimmer control is in this position.

Interior Light Defeat (OFF)

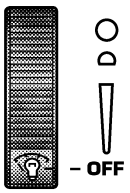

8093e60e

Rotate the dimmer control to the extreme bottom "OFF" position. The interior lights will remain off when the doors are open.

Parade Mode (Daytime Brightness Feature)

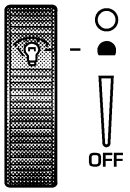

8093e650

Rotate the dimmer control to the first detent (white semi-circle). This feature brightens the odometer and radio display when the parking lights or headlights are on during daylight conditions.

Headlights, Parking Lights, Instrument Panel Lights, and Front Fog Lights

Turn the end of the Multi-Function Control Lever to the first detent for parking light operation. Turn to the second detent for headlight operation. Pull out the end of the Multi-Function Control Lever to turn on the front fog lights.

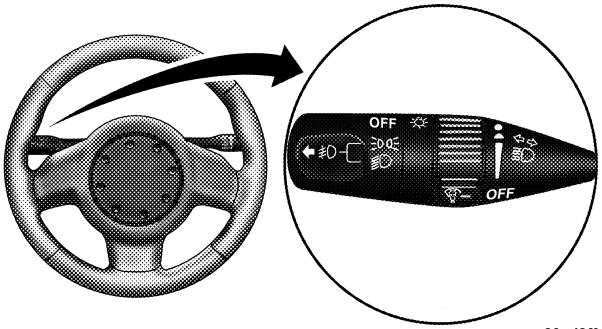

80ed8f39

Multi-Function Lever

To change the brightness of the instrument panel lights, rotate the center portion of the Multi-Function Control Lever up or down.

Daytime Running Lights

The fog lights will come on as Daytime Running Lights whenever the ignition switch is on, the headlights are off, and the parking brake is off. The headlight switch must be used for normal night time driving.

NOTE: This feature is standard on all Canadian vehicles and cannot be disabled. For US vehicles, this feature is shipped disabled and can be enabled (or disabled) at a dealership if so desired.

Lights-On Reminder

If the headlights or parking lights are on after the ignition is turned OFF, a chime will sound to alert the driver when the driver's door is opened.

Headlight Time Delay

This feature provides the safety of headlight illumination for about 90 seconds.

To activate the delay, turn off the ignition while the headlights are still on. Then turn off the headlights within 45 seconds. The delay interval begins when the headlamp switch is turned off.

If the headlights are turned off before the ignition, they will go off in the normal manner.

This feature can be disabled at the dealership if so desired.

Battery Saver Feature — Exterior Lights

If an exterior light is left on when the ignition switch is moved to the Off position (with the key in or out), it will automatically turn off after 3 minutes. Normal operation will resume when the ignition is turned On or when the headlight switch is turned to another position.

If the ignition switch is turned to any position other than the Off position at any time during the 3 minute delay period the battery saver feature will be disabled.

Fog Lights

The front fog light switch is on the Multi-Function Control Lever. To activate the front fog lights, turn on the parking lights or the low beam headlights and pull out the end of the control lever.

NOTE: The fog lights will only operate with the headlights on low beam. Selecting high beam headlights will turn off the fog lights.

Turn Signals

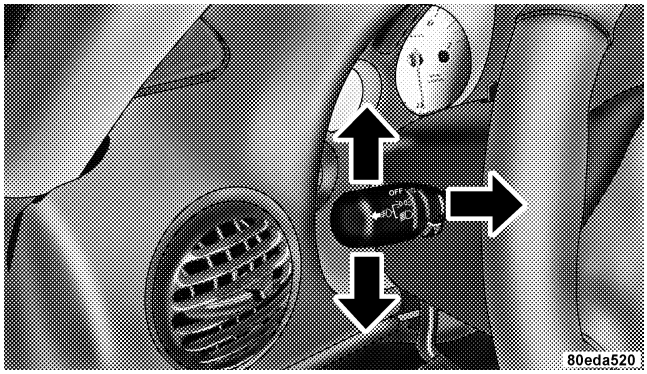

Turn Signal Lever

Move the Multi-Function Control Lever up or down and the arrows on each side of the instrument cluster flash to show proper operation of the front and rear turn signal lights. You can signal a lane change by moving the lever partially up or down without moving beyond the detent.

If either light remains on and does not flash, or there is a very fast flash rate, check for a defective outside light bulb. If an indicator fails to light when the lever is moved, it would suggest that the fuse or indicator bulb is defective.

Highbeam/Lowbeam Select Switch

Pull the Multi-Function Control Lever towards you to switch the headlights to HIGH beam. Pull the control lever a second time to switch the headlights to LOW beam.

Flash to Pass

You can signal another vehicle with your headlights by lightly pulling the multi-function lever toward the steering wheel. This will cause the headlights to turn on at high beam and remain on until the lever is released.

Tilt Steering Column

To tilt the column, simply pull down the small lever below the turn signal control and move the wheel up or down, as desired. Return the lever to the up position to lock the wheel firmly in place.

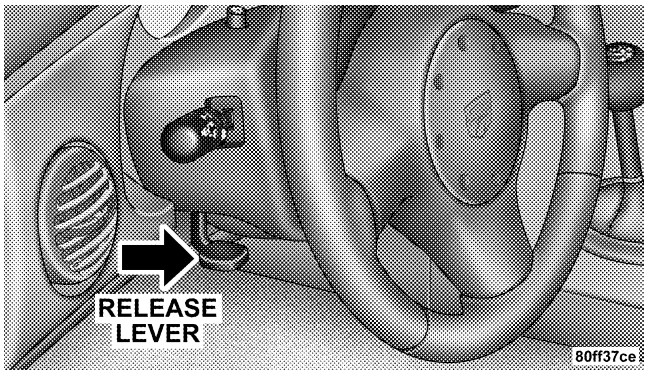

Tilt Steering Column Control

WARNING!

Tilting the steering column while the vehicle is moving is dangerous. Without a stable steering column, you could lose control of the vehicle and have an accident. Adjust the column only while the vehicle is stopped. Be sure it is locked before driving.

ADJUSTABLE PEDALS

Your Viper is equipped with an adjustable pedal system that allows about 4 inches (100 mm) of fore and aft pedal adjustment. The pedals are adjusted using a switch recessed into the knee bolster beneath the steering column.

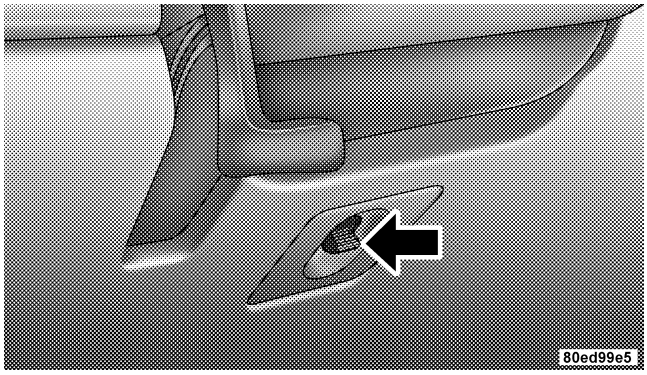

Adjustable Pedal Switch

To adjust the pedals:

- Adjust the seat to a comfortable driving position.
- Adjust the pedals to a position that allows full pedal travel.
- It may be necessary to make further small adjustments to find the best possible seat/pedal position.

WARNING!
Do not adjust the pedals while the vehicle is moving. You could lose control and have an accident. Always adjust the pedals while the vehicle is parked.

Adjustable Left Foot Rest

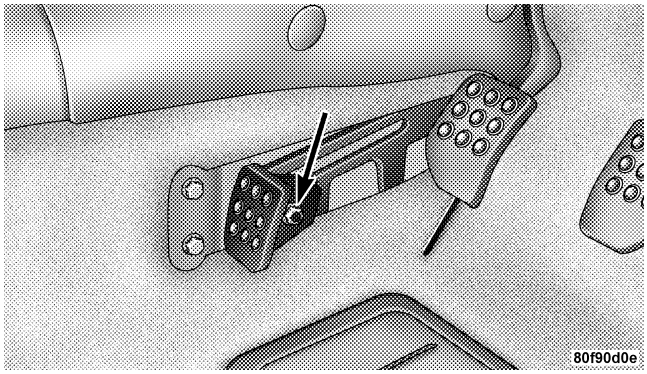

Adjustable Foot Rest

The left foot rest can be manually adjusted fore and aft and rotated up and down to a comfortable position.

To adjust the left foot rest:

- Loosen the nut on the pedal using a 13 mm socket.
- Slide the pedal fore, aft and/or rotate up or down to find a comfortable position.
- Retighten the nut, being careful not to overtighten.

WINDSHIELD WIPERS AND WASHERS

The wipers and washers are operated by a switch in the right control lever. Move the control lever up to select the desired wiper speed.

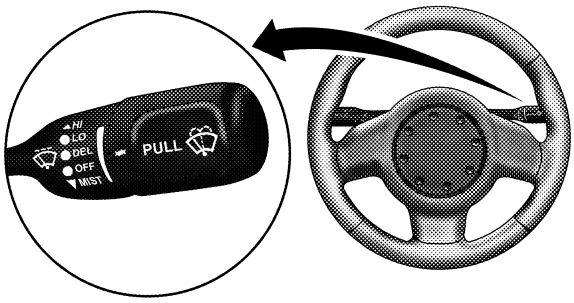

80ed98f5

Windshield Wiper/Washer Control

Windshield Washers

To use the washer, pull the control lever toward you and hold while spray is desired. If the lever is pulled while in the delay range, the wiper will operate in low speed for two wipe cycles after the lever is released, and then resume the intermittent interval previously selected.

If the lever is pulled while in the OFF position, the wipers will operate for two wipe cycles, then turn OFF.

Mist Function

Push down on the wiper control lever to activate a single wipe to clear the windshield of road mist or spray from a passing vehicle. The wiper blade will continue to wipe until you release the stalk.

Intermittent Wiper System

Use the intermittent wiper when weather conditions make a single wiping cycle with a variable pause between cycles desirable. Move the lever to the first detent (DEL) position, then select the delay interval by turning the end of the stalk. Rotate the end upward to decrease the delay time and downward to increase it. The delay can be regulated from one second between cycles to 15 seconds between cycles.

UNDERSTANDING YOUR INSTRUMENT PANEL

CONTENTS

■ Instrument Panel Features 85
■ Instrument Cluster Description 86
□ Speedometer 86
□ Turn Signal Indicators 87
□ Hazard Indicator 87
□ Message Center 87
□ Gauges 92
■ Electronic Digital Clock 93
□ Clock Setting Procedure 93
■ Radio General Information 94
□ Radio Broadcast Signals 94
□ Two Types Of Signals 94
□ Electrical Disturbances 94
□ AM Reception 94
□ FM Reception 95
■ Sales Code RBQ—AM/FM Stereo Radio With 6 - Disc CD Changer 95
□ Radio Operation 96

- CD Player Operation 98
- CD/DVD Disc Maintenance 103
- Radio Antenna 103
- Radio Operation And Cellular Phones 103
- Ventilation 104
- Climate Controls 104
  - Fan Control 105
  - Temperature Control 105
  - Mode Control 105
  - Operating Tips 107

INSTRUMENT PANEL FEATURES

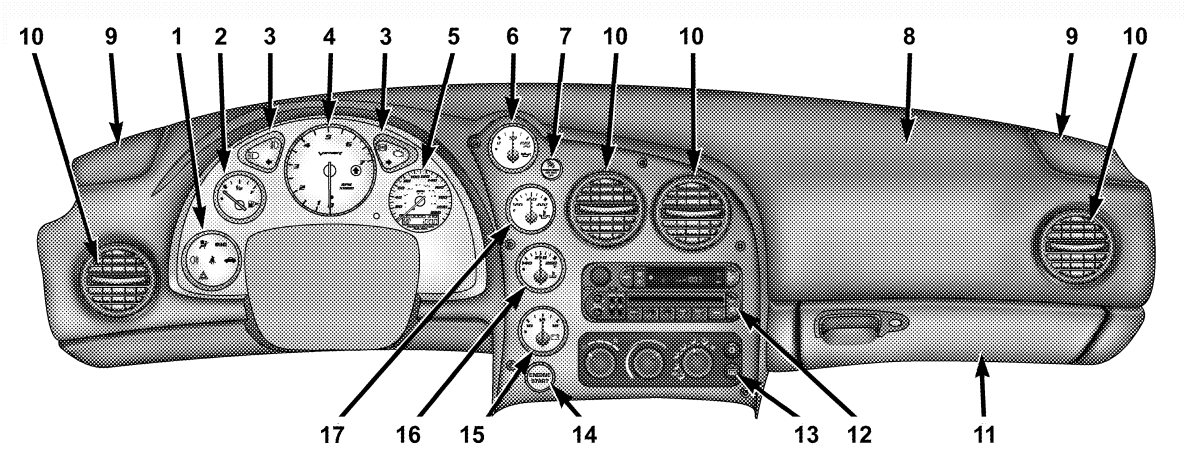

1. Main Message Center
2. Fuel Gauge
3. Auxillary Message Centers
4. Tachometer
5. Speedometer
6. Oil Pressure Gauge
7. Passenger Airbag Off Light
8. Passenger Airbag
9. SoundSystem Speakers
10. Air Vents
11. Glove Compartment
12. Sound System
13. Climate Control
14. Engine Start Button
15. Voltage Gauge
16. Water Temperature Gauge
17. Oil Temperature Gauge

8105580f

INSTRUMENT CLUSTER DESCRIPTION

Speedometer

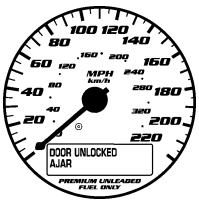

Shows the vehicle speed in miles-per-hour and kilometers-per-hour.

Odometer/Trip Odometer

The odometer shows the total distance the vehicle has been driven.

U.S. federal regulations require that upon transfer of vehicle ownership, the seller certify to the purchaser the correct mileage that the vehicle has been driven. Therefore, if the odometer reading is changed, during repair or replacement, be sure to keep a record of the reading before and after the service so that the correct mileage can be determined.

The trip odometer shows individual trip mileage. To switch from odometer to trip odometer, press and release the Trip Odometer button. Press and release the Trip button a second time to return to the odometer. While in trip mode, press and hold the button for at least 1 second to reset the trip odometer to zero.

Door Unlocked, Door Ajar, Low Tire Warnings

If you move the vehicle and a door is not completely closed, the words DOOR AJAR will appear in the display and a chime will sound once. If the door is not locked, DOOR UNLOCK will appear in the display. If the tire pressure is low, the words LOW TIRE will appear in the display and a chime will sound once.

Turn Signal Indicators

The arrows will flash in unison with the corresponding exterior turn signal when using the signal lever.

Hazard Indicator

Both turn signal arrows will flash in unison with all front and rear turn signals when the hazard warning switch is used.

NOTE: Leaving the hazard flashers on for extended periods of time will wear down the battery.

Message Center

Message Center Components

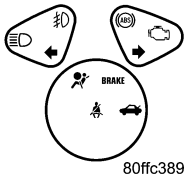

Anti-Lock Warning Light

The amber ABS Warning Light will come on when the ignition is first turned on, and stay on briefly as a bulb check. If the bulb does not come on during starting, have the bulb repaired promptly. This light also illuminates to indicate that the Antilock Brake System self-check is in process at vehicle start-up. If the light remains on after start-up, or comes on and stays on at road speeds, it may indicate that the ABS has detected a malfunction or has become inoperative. In this case, the system reverts to standard non-antilock brakes. Turn the engine off and on again to reset the Antilock Brake System. If the light remains on, see your authorized dealer. If both the red BRAKE and amber ABS warning lights are on and the parking brake is fully released, see your authorized dealer immediately.

WARNING!

If both ABS and/or Brake Warning lamps become illuminated, please seek service immediately! Your Viper will have diminished braking capability and control if ABS and/or service brake systems are not working properly. Have your brake system serviced immediately.

Skip Shift Indicator

This indicator is located in the Tachometer. There are two LED lights. The amber LED light will come on when you are being prevented from shifting from First to Second or Third gear. The tachometer's shift arrow also houses a red LED light that activates when the tachometer gauge pointer goes above 5600 RPM and it shuts off when the tachometer pointer falls below 5500 RPM. The indicator serves as a visual aid to shift before reaching the red line.

Malfunction Indicator Light

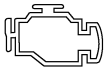

This light is part of an onboard diagnostic system called OBD II which provides in-field emissions inspection tests required in some states. If certain self-diagnostic monitors are not complete, the light starts flashing 14 seconds after the key is switched on and will continue to flash for approximately 11 seconds. If the OBD II monitors have completed, the malfunction indicator lamp will not flash as described above.

The light will illuminate when the key is turned to the ON position before engine start. The light will remain on steady until the engine has started. If the bulb does not come on when turning the key from OFF to ON have the condition checked promptly. The light will turn off after the engine has started, unless a malfunction is present.

CAUTION!

Prolonged driving with the light on could cause further damage to the emission control system. It could also affect fuel economy and driveability. The vehicle must be serviced before any state emissions tests can be performed.

If the light is flashing, severe catalytic converter damage and power loss will soon occur. Immediate service is required.

If the gas cap is not secured properly, the light may come on. Be sure the gas cap is tightened every time you add fuel.

High Beam Indicator

This light shows that the headlights are on high beam. Pull the turn signal lever toward the steering wheel to switch the headlights from high or low beam.

Seat Belt Indicator Light

This system alerts the driver to fasten the seat belt if not done so within 60 seconds of starting the vehicle and if the vehicle is moving faster than 5 mph (8 km/h). The system will cause a chime to sound repeatedly and will flash the seat belt warning light for 96 seconds or until the driver's seat belt is fastened. The reminder system will be reactivated if the driver's seat belt is unfastened for more than 10 seconds and the vehicle speed is greater than 5 mph (8 km/hr). Refer to Enhanced Seat Belt Use Reminder System (BeltAlert™) in the Occupant Restraints section for deactivating the system.

Trunk Ajar Light

This light indicates that the trunk is not latched.

Engine Coolant Temperature Light

A red LED light on the Coolant Temperature gauge will illuminate to warn of an overheated engine coolant condition.

Low Oil Pressure Light

A red LED light on the Oil Pressure gauge will illuminate to indicate low engine oil pressure. The light should come on briefly as a bulb check when the engine is first started. If the light stays on or comes on while driving, stop the vehicle and shut off the engine. DO NOT operate the vehicle until the cause is corrected.

NOTE: This light does not indicate how much oil is in the engine. The engine oil level must be checked under the hood.

Charge System Light

A red LED light on the Voltage gauge will illuminate when there is a charging system malfunction or a possible accessory drive belt failure.

CAUTION!
The accessory belt also drives the water pump. Operating the vehicle with a failed belt can cause engine overheating and possible severe engine damage.

Fog Light ON Indicator

This light indicates that the fog lights are on.

Brake System Warning Light

BRAKE

The dual brake system provides a reserve braking capability in the event of a failure to a portion of the hydraulic system. The warning light should be checked frequently to assure that it is operating properly. This can be done by turning the ignition switch to a point midway between ON and START. The light should come on. The red Brake Warning Light will come on when the ignition is first turned on, and stay on briefly as a bulb check. If the bulb does not come on during starting, have the bulb repaired promptly. If the light stays on longer, it may be an indication that the parking brake has not been released. If the light remains on when the parking brake is off it indicates a possible brake hydraulic system malfunction. Immediate repair is necessary and continued operation of the vehicle in this condition is dangerous.

WARNING!

Driving a vehicle with the brake light on is dangerous. Part of the brake system has failed. It will take longer to stop the vehicle. You could have a accident. Have the brakes checked immediately.

Airbag Light

This light will come on and remain on for 6 to 8 seconds as a bulb check when the ignition switch is first turned on. If the bulb is not lit during starting, have it replaced. If the light stays on or comes on while driving, have the system checked by an authorized dealer.

Gauges

Tachometer

This gauge shows engine speed in revolutions-per-minute (RPM) times 1,000. Avoid excessive engine speeds in any part of the red warning zone, particularly when driving downhill or in lower gears.

Coolant Temperature Gauge

This gauge shows the engine coolant temperature. The gauge pointer will likely show higher temperatures when driving in hot weather, up mountain grades, or in heavy stop and go traffic. If the red LED light turns on, stop the vehicle and turn off the engine until the cause is corrected.

Oil Temperature Gauge

This gauge shows the oil temperature. The gauge pointer will likely show higher temperatures when driving in hot weather, up mountain grades, or in heavy stop and go traffic. If the red LED light turns on, stop the vehicle and turn off the engine until the cause is corrected.

Oil Pressure Gauge

This gauge shows engine oil pressure when the engine is running. The pressure will vary with engine speed, oil viscosity, and engine temperature. Oil pressures will be higher as the engine is warming up. The normal operating pressure is between 20 and 80 psi (pounds per square inch). If the pointer remains in the red range, turn off the engine until the cause is corrected.

This gauge does not indicate the amount of oil in the engine. The engine oil level must be checked under the hood. Check the level often during severe usage.

Fuel Gauge

This gauge shows the amount of fuel in the gas tank. The reaction time of the gauge has been slowed to avoid needle fluctuation during periods of high G force cornering.

Voltage Gauge

This gauge shows the electrical system voltage. The normal operating voltage is from 12 to 14 volts with the engine running. If the pointer remains at either the high or low ends of the scale, the electrical system should be serviced.

ELECTRONIC DIGITAL CLOCK

The clock and radio each use the display panel built into the radio. A digital readout shows the time in hours and minutes whenever the ignition switch is in the ON or ACC position.

When the ignition switch is in the OFF position, or when the radio frequency is being displayed, time keeping is accurately maintained.

Press and release the Time button to display the time. Press and release the button a second time to turn off the time display.

Clock Setting Procedure

1. Turn the ignition switch to the “ON” or “ACC” position. Using the point of a ballpoint pen or similar object, press either the “H” (Hour) or “M” (Minute) buttons on the radio. The display will show the time.

2. Press the “H” button to set hours or the “M” button to set minutes. The time setting will increase each time you press a button.

RADIO GENERAL INFORMATION

Radio Broadcast Signals

Your new radio will provide excellent reception under most operating conditions. Like any system, however, car radios have performance limitations, due to mobile operation and natural phenomena, which might lead you to believe your sound system is malfunctioning. To help you understand and save you concern about these “apparent” malfunctions, you must understand a point or two about the transmission and reception of radio signals.

Two Types of Signals

There are two basic types of radio signals... AM or Amplitude Modulation, in which the transmitted sound causes the amplitude, or height, of the radio waves to vary... and FM or Frequency Modulation, in which the frequency of the wave is varied to carry the sound.

Electrical Disturbances

Radio waves may pick up electrical disturbances during transmission. They mainly affect the wave amplitude, and thus remain a part of the AM reception. They interfere very little with the frequency variations that carry the FM signal.

AM Reception

AM sound is based on wave amplitude, so AM reception can be disrupted by such things as lightning, power lines and neon signs.

FM Reception

Because FM transmission is based on frequency variations, interference that consists of amplitude variations can be filtered out, leaving the reception relatively clear, which is the major feature of FM radio.

NOTE: On vehicles so equipped the radio, steering wheel radio controls and 6 disc CD/DVD changer will remain active for up to 45 seconds after the ignition switch has been turned off. Opening a vehicle front door will cancel this feature.

SALES CODE RBQ—AM/FM STEREO RADIO WITH 6 - DISC CD CHANGER

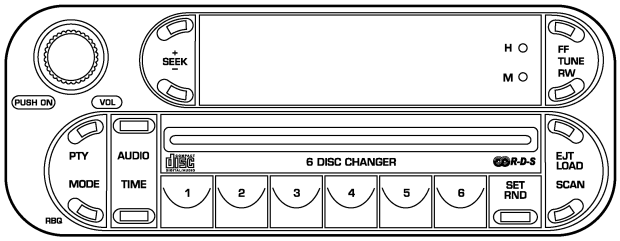

813ebacd

RBQ Radio

Radio Operation

Power/Volume Control

Press the PWR/VOL control to turn the radio on. Turn the volume control clockwise to increase the volume.

NOTE: Power to operate the radio is controlled by the ignition switch. It must be in the ON or ACC position to operate the radio.

Mode

Press the MODE button repeatedly to select between AM, FM, the CD changer and Sirius Satellite Radio™ (if equipped). The display will show ST when a stereo station is received.

To select Sirius Satellite Radio™ (if equipped), press the MODE button until the word SIRIUS appears. The following will be displayed in this order: After three seconds, the current channel name and number will be displayed for five seconds. The current program type and channel number will then be displayed for five seconds. The current channel name and number will then be displayed until an action occurs. CD's may remain in the player while in the Satellite Radio mode.

Seek

Press and release the SEEK button to search for the next station in either the AM or FM mode. Press the top of the button to seek up and the bottom to seek down. The radio will remain tuned to the new station until you make another selection. Holding the button in will bypass stations without stopping until you release it.

Tune

Press the TUNE control up or down to increase or decrease the frequency. If the button is pressed and held, the radio will continue to tune until the button is released. The frequency will be displayed and continuously updated while the button is pressed.

To Set The Radio Push-Button Memory

When you are receiving a station that you wish to commit to push-button memory, press the SET RND button. SET 1 will show in the display window. Select the "1–6" button you wish to lock onto this station and press and release that button. If a button is not selected within 5 seconds after pressing the SET RND button, the station will continue to play but will not be locked into push-button memory.

You may add a second station to each push-button by repeating the above procedure with this exception: Press the SET button twice and SET 2 will show in the display window. Each button can be set for SET 1 and SET 2 in both AM and FM. This allows a total of 12 AM and 12 FM stations to be locked into push-button memory. The stations stored in SET 2 memory can be selected by pressing the corresponding push-button twice. Every time a preset button is used, a corresponding button number will be displayed.

Audio

The audio button controls the BASS, TREBLE, BALANCE, and FADE.

Press the AUDIO button and BASS will be displayed. Press the SEEK + or SEEK – to increase or decrease the Bass tones.

Press the AUDIO button a second time and TREB will be displayed. Press the SEEK + or SEEK – to increase or decrease the Treble tones.

Press the AUDIO button a third time and BAL will be displayed. Press the SEEK + or SEEK – to adjust the sound level from the right or left side speakers.

Press the AUDIO button a fourth time and FADE will be displayed. Press the SEEK + or SEEK – to adjust the sound level between the front and rear speakers.

Press the AUDIO button again or wait 5 seconds to exit setting tone, balance, and fade.

Time Button
Press the TIME button to change the display between radio frequency and time.

General Information
This radio complies with Part 15 of FCC rules and with RSS-210 of Industry Canada. Operation is subject to the following conditions:

1. This device may not cause harmful interference,

2. This device must accept any interference received, including interference that may cause undesired operation.

NOTE: Changes or modifications not expressively approved by the party responsible for compliance could void the user's authority to operate the equipment.

CD Player Operation

NOTE: The ignition switch must be in the ON or ACC position and the Power / Volume control pushed ON before the CD player will operate.

Inserting The Compact Disc

CAUTION!
This CD player will accept 4 ¾ inch (12 cm) discs only. The use of other sized discs may damage the CD player mechanism.

You may either insert or eject a disc with the radio OFF.

If you insert a disc with the ignition ON and the radio OFF, the display will show the time of day. If you insert a disc with the ignition OFF, the display will show the time of day for about 5 seconds, then go out.

If you insert a disc with the ignition ON and the radio ON, the unit will switch from radio to CD mode and begin to play when you insert the disc. The display will show the disc number, the track number, and index time in minutes and seconds. Play will begin at the start of track 1.

LOAD/ EJT — Load
Press the LOAD/ EJT button and the button with the corresponding number where the CD is being loaded. After the radio displays "load" insert the CD into the player.

Radio display will show "loading" when it is being loaded.

LOAD / EJT — Eject
Press the LOAD/ EJT button and the button with the corresponding number where the CD was loaded and the disc will unload and move to the entrance for easy removal.

Radio display will show "ejecting" when it is being ejected.

If you have ejected a disc and have not removed it within 15 seconds, it will be reloaded. If the CD is not removed, the radio will continue to play the non-removed CD. If the CD is removed and there are other CD's in the radio, the radio will play the next CD. If the CD is removed and there are no other CD's in the radio, the radio will return to the last selected AM or FM mode.

The disc can be ejected with the radio and ignition OFF.

Seek
Press the top of the SEEK button for the next selection on the CD. Press the bottom of the button to return to the beginning of the current selection, or return to the beginning of the previous selection if the CD is within the first second of the current selection.

Scan
Press the Scan button to scan through each track on the CD currently playing.

FF/TUNE/RW
Press FF (Fast Forward) and the CD player will begin to fast forward until FF is released. The RW (Reverse) button works in a similar manner.

Random Play — SET / RND
Press the RND button while the CD is playing to activate Random Play. This feature plays the tracks on the disc in random order to provide an interesting change of pace.

Press the SEEK button to move to the next randomly selected track.

Press the SET / RND button a second time to stop Random Play.

PTY (Program Type) Button
Pressing this button once will turn on the PTY mode for 5 seconds. If no action is taken during the 5 second time out the PTY icon will turn off. Pressing the PTY button repeatedly within 5 seconds will allow the program format type to be selected. Many radio stations do not currently broadcast PTY information.

Toggle the PTY button to select the following format types:

Program Type	Radio Display
Adult Hits	Adlt Hit
Classical	Classicl
Classic Rock	Cls Rock
College	College
Country	Country
Emergency	ALERT!
Emergency Test	Test

Program Type	Radio Display
Information	Inform
Jazz	Jazz
Foreign Language	Language
News	News
Nostalgia	Nostalga
Oldies	Oldies
Personality	Persnlty
Public	Public
Rhythm and Blues	R & B
Religious Music	Rel Musc
Religious Talk	Rel Talk
Rock	Rock
Soft	Soft
Soft Rock	Soft Rck
Soft Rhythm and Blues	Soft R&B
Sports	Sports
Talk	Talk
Top 40	Top 40
Weather	Weather

By pressing the SEEK button when the PTY icon is displayed, the radio will be tuned to the next frequency station with the same selected PTY name. The PTY function only operates when in the FM mode.

The radio display will flash “SEEK” and the selected PTY program type when searching for the next PTY station. If no station is found with the selected PTY program type, the radio will return to the last station.

If a preset button is activated while in the PTY (Program Type) mode, the PTY mode will be exited and the radio will tune to the preset station.

By pressing the SCAN button when the PTY icon is displayed, the radio will stop at every PTY station on the band and list each corresponding program type in the radio display.

Time
Press the TIME button to change the display from elapsed CD playing time to time of day.

Operating Instructions - Satellite Radio Mode (If Equipped)
Refer to the Satellite Radio section of the Owner's Manual.

CD Diagnostic Indicators
When driving over a very rough road, the CD player may skip momentarily. Skipping will not damage the disc or the player, and play will resume automatically.

As a safeguard and to protect your CD player, one of the following warning symbols may appear on your display.

A CD HOT symbol indicates the player is too hot.

CD HOT will pause the operation. Play can be resumed when the operating temperature is corrected or another MODE is selected.

CD ERROR will appear on the display if the laser is unable to read the Disc data for the following reasons:

- Warped disc
- Excessive vibration
- Disc inserted upside down
- Damaged disc
- Water condensation on optics

CD/DVD DISC MAINTENANCE

To keep the CD/DVD discs in good condition, take the following precautions:

1. Handle the disc by its edge; avoid touching the surface.

2. If the disc is stained, clean the surface with a soft cloth, wiping from center to edge.

3. Do not apply paper, paper CD labels, or tape to the disc; avoid scratching the disc.

4. Do not use solvents such as benzine, thinner, cleaners, or antistatic sprays.

5. Store the disc in its case after playing.

6. Do not expose the disc to direct sunlight.

7. Do not store the disc where temperatures may become too high.

RADIO ANTENNA

The radio antenna is located in the windshield.

RADIO OPERATION AND CELLULAR PHONES

Under certain conditions, the operation of a cellular phone in your vehicle can cause erratic or noisy performance from your radio. This condition may be lessened or eliminated by relocating the cellular phone antenna. This condition is not harmful to the radio. If your radio performance does not satisfactorily "clear" by the repositioning of the antenna, it is recommended that the radio volume be turned down or off during cellular phone operation.

VENTILATION

When the ventilation mode is selected, outside air comes through the panel outlets. Air will enter the vehicle with or without the blower in operation.

CLIMATE CONTROLS

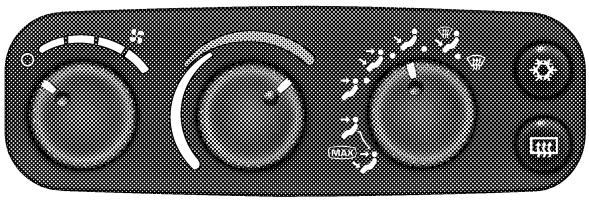

80edea44

Air Conditioning And Heater Controls

The Air Conditioning System allows you to balance the temperature, amount and direction of the air circulating throughout the vehicle.

The controls are as follows:

Fan Control

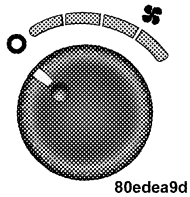

Use this control to regulate the amount of air forced through the system in any mode you select. Turn the control clockwise to increase fan speed. Turn the control to the O — Off position to shut off the fan and to prevent any outside air from entering the vehicle. This also turns off the A/C compressor.

Temperature Control

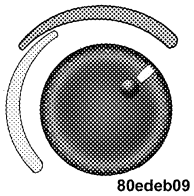

Use this control to regulate the temperature of the air inside the passenger compartment. The blue area of the control indicates cooler temperatures while the red area indicates warmer temperatures.

Mode Control

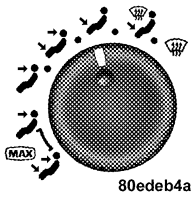

Use this control to select the direction of air flow.

NOTE: The dot between the mode control icons is a mix position between the two modes.

The mode control positions are as follows:

Recirculate

Air is recirculated inside the vehicle. You may choose between Bi-Level and Panel air outlets while in this mode. Use this mode to temporarily block out any outside odors, smoke, or dust and to cool the interior rapidly upon initial start up in very hot or humid weather.

Panel

Air is directed through the outlets in the instrument panel. These outlets can be adjusted to direct air flow.

Bi-Level

Air is directed through the instrument panel and floor outlets. A small amount of air is also directed through the defrost outlets.

NOTE: There is a varying temperature differential between the upper and lower outlets for added comfort. The warmer air goes to the floor outlets. This feature provides improved comfort during sunny but cool conditions.

Floor

Air is directed through the floor outlets with a lesser amount through the defrost outlets.

Floor/Defrost

Air is directed through the windshield defrost and the floor outlets. This setting works best in cold or snowy conditions that require extra heat at the windshield. This setting is good for maintaining comfort while reducing moisture on the windshield.

Windshield Defrost

Air is directed through the windshield defrost outlet. Use this mode with maximum fan and temperature settings for best windshield defrosting.

NOTE: The air conditioning compressor operates in this mode. This dehumidifies the air to help dry the windshield. To improve fuel economy, leave in the Defrost mode only when necessary.

A/C Pushbutton

With the fan control in the ON position, pushing the A/C button turns on the air conditioning compressor. An indicator light above the button

shows that the Air Conditioning compressor is on. Conditioned air is now directed through the outlets selected. Pushing the button a second time turns the compressor OFF.

Slight changes in engine speed or power may be noticed when the compressor is on. This is a normal occurrence since the compressor will cycle on and off to maintain comfort and increase fuel economy.

NOTE: If your air conditioning performance seems lower than expected, check the front of the A/C condenser for an accumulation of dirt or insects.

Rear Window Defroster

Press the button once to turn on the Rear Window Defroster and a second time to turn it off. A light above the button shows that the Rear Defroster is On.

NOTE: The defroster turns off automatically after 15 minutes of operation. Each later activation will allow 7 ½ minutes of operation.

CAUTION!

To avoid damaging the electrical conductors, do not use scrapers, sharp instruments, or abrasive window cleaners on the interior surface of the rear window. Labels can be peeled off by soaking with warm water.

Operating Tips

When operating the system during the winter months, make sure the air intake, at the right side of the hood, is free of ice, slush, snow or other obstructions such as leaves. Leaves collected in the air-intake plenum may reduce air flow and plug the plenum water drains.

The blower air will heat faster in cold weather if you use only the low blower speeds for the first ten minutes of vehicle operation.

During engine warm-up in cold weather, use the Defrost mode to direct any cold air away from the occupants.

WEATHER	CONTROL SETTINGS
HOT WEATHER AND VEHICLE INTERIOR IS VERY HOT	Start vehicle and put Mode Control in MAX position and turn on A/C. Set Fan Control to High. Roll windows down to flush out hot air. Roll windows up after hot air is flushed out. Turn Mode Control to and set Fan and Temp Knobs as desired once car has cooled.
WARM WEATHER	Set the Mode Control to position and turn A/C on in sunny weather. Choose the position for cloudy or dark conditions with A/C on.
COOL OR COLD HUMID CONDITIONS	Set the Mode Control to position and turn the A/C on in sunny weather. Choose the position and turn on the A/C in cloudy or dark conditions.
COLD DRY CONDITIONS	Use the position in sunny weather, the position in cloudy or dark weather, and the Mode Knob setting for snowy or very cold weather that requires extra heat to the windshield.

80f28d08

STARTING AND OPERATING

CONTENTS

- Starting Procedures 111
  - If Engine Fails To Start 112
  - After Starting 114
- Transmission Shifting 114
  - Recommended Shift Speeds 115
  - Skip Shift Light 115
- Parking Brake 116
- Brake System 117
  - Brake Pad Break-In 121
- Power Steering 121
- Tire Safety Information 122
  - Tire Markings 122
  - Tire Identification Number (TIN) 125
  - Tire Loading And Tire Pressure 126
- Tires—General Information 130
  - Tire Pressure 130
  - Tire Inflation Pressures 131
  - Radial-Ply Tires 134

- ◻ Compact Spare Tire — If Equipped 134
- ◻ Limited Use Spare — If Equipped 135
- ◻ Tire Spinning 136
- ◻ Tread Wear Indicators 137
- ◻ Replacement Tires 137
- ◻ Alignment And Balance 138

■ Low Tire Pressure (Ltp) System 139
- ◻ Low Tire Indicator 139

■ Tire Chains 140

■ Snow Tires 140

■ Tire Storage 141

■ Tire Rotation Recommendations 141

■ Ground Clearance 141

■ Fuel Requirements 142
- ◻ Spark Knock 142
- ◻ Reformulated Gasoline 142
- ◻ Gasoline/Oxygenate Blends 143
- ◻ MMT In Gasoline 143
- ◻ Materials Added To Fuel 144
- ◻ Fuel System Cautions 144
- ◻ Carbon Monoxide Warnings 145

■ Adding Fuel 145

■ Vehicle Loading 146

■ Trailer Towing 146

STARTING PROCEDURES

CAUTION!

Long periods of engine idling, especially at high engine speeds, can cause excessive exhaust temperatures which can damage your vehicle. Do not leave your vehicle unattended with the engine running.

WARNING!

Do not leave animals or children inside parked vehicles in hot weather; interior heat build up may cause serious injury or death.

Fully apply the parking brake, press the clutch pedal to the floor, and place the gear selector in NEUTRAL before starting the engine.

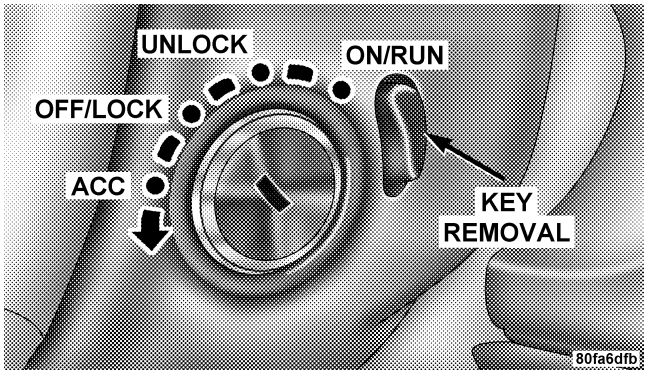

Ignition Key Positions

NOTE: The engine will not start unless the clutch pedal is pressed to the floor.

Normal Starting of either a cold or a warm engine does not require pumping or depressing the accelerator pedal. To start the vehicle, turn the key to the ON position and press the red ENGINE START button located on the

instrument panel and release when the engine starts. If the engine has not started within 3 seconds, slightly depress the accelerator pedal while continuing to crank. If the engine fails to start within 10 seconds, turn the key to the "OFF" position, wait 5 seconds, then repeat the normal starting procedure.

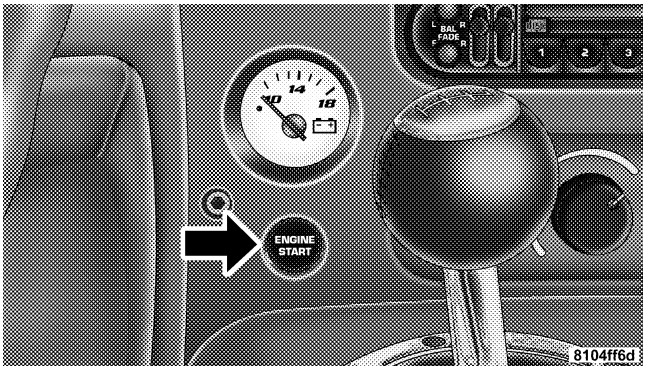

Engine Start Button

If Engine Fails to Start

NOTE: The Remote Keyless Entry Transmitter MUST be used to unlock the vehicle and disarm the alarm system.

In the event of a lost or defective Remote Keyless Transmitter, the security system can be momentarily disarmed to allow the vehicle to be started.

See the paragraph on the Vehicle Theft Security System in Section 2 of this manual

WARNING!

Do not attempt to push or tow your vehicle to get it started. Unburned fuel could enter the catalytic converter and once the engine has started, ignite and damage the converter and vehicle. If the vehicle has a discharged battery, booster cables may be used to obtain a start from a booster battery or the battery in another vehicle. This type of start can be dangerous if done improperly, so follow this procedure carefully. See section 6 of this manual for jump starting instructions.

If the engine fails to start after you have followed the "NORMAL STARTING" procedure, it may be flooded. Push the accelerator pedal all the way to the floor and hold it there while cranking the engine. This should clear any excess fuel in case the engine is flooded.

NOTE: To prevent damage to the starter, do not crank the engine for more than 15 seconds at a time. Wait 10 to 15 seconds before trying again.

If the engine has been flooded, it may start to run, but not have enough power to continue running when the start button is released. If this occurs, continue cranking with the accelerator pedal pushed all the way to the floor. Release the accelerator pedal and the start button once the engine is running smoothly.

If the engine shows no sign of starting after two 15 second periods of cranking with the accelerator pedal held to the floor, the "NORMAL STARTING" procedure should be repeated.

After Starting

The idle speed will automatically decrease as the engine warms up.

WARNING!
Never pour fuel or other flammable liquid into the throttle body air inlet opening in an attempt to start the vehicle. This could result in flash fire causing serious personal injury.

TRANSMISSION SHIFTING

NOTE: The parking brake should be engaged and the gear selector placed in REVERSE before leaving the vehicle, especially on an incline.

Fully depress the clutch pedal before you shift gears. As you release the clutch pedal, lightly depress the accelerator pedal.

Be sure the transmission is in FIRST gear, (not THIRD), when starting from a standing position. Damage to the clutch can result from starting in THIRD.

For most city driving you will find it easier to use only the lower gears. For steady highway driving with light accelerations, 6th gear is recommended.

Never drive with your foot resting on the clutch pedal, or try to hold the vehicle on a hill with the clutch pedal partially engaged. This will cause abnormal wear on the clutch.

Never shift into REVERSE until the vehicle has come to a complete stop.

NOTE: During cold weather, until the transmission lubricant has warmed, you may have difficulty shifting. This is normal and not harmful to the transmission.

Recommended Shift Speeds

To use your manual transmission for fuel economy it should be upshifted as listed below. Shift at the vehicle speeds listed for acceleration. Earlier upshifts during cruise conditions (relatively steady speeds) will result in increased fuel economy, and may be used as indicated.

MANUAL TRANSMISSION RECOMMENDED SHIFT SPEEDS					
	1-2	2-3	3-4	4-5	5-6
MPH	17	–	–	27	42
(km/h)	(27)	–	–	(43)	(68)

Higher upshift speeds may be used to obtain a desired acceleration rate.

Skip Shift Light

There are times when you must shift directly from First to Fourth gear instead of from First to Second. An amber (LED) arrow on the instrument cluster will light up during these times. This is to help you get the best possible fuel economy.

The shift arrow will light up when engine coolant is higher than 106°F (41°C), vehicle speed is greater than 12 MPH and less than 20 MPH, engine speed is less than 1322 RPM, you are in 1st gear and you are at 1/4 throttle or less.

When the arrow is lit, the shift mechanism will only allow shifts from First to Fourth gears. After you shift to Fourth gear, you can press the clutch in and shift to another forward gear.

Downshifting - Proper downshifting will improve fuel economy and prolong engine life.

To maintain a safe speed and prolong brake life, downshift to maintain a safe speed when descending a steep grade.

WARNING!
Skipping more than one gear while downshifting, could cause you to lose control of your vehicle. You could have an accident.

CAUTION!
If you skip more than one gear while downshifting or downshift at too high an engine speed, you could damage the engine, transmission, or clutch.

PARKING BRAKE

When you apply the parking brake with the ignition ON, the brake system warning light in the instrument cluster will come on.

NOTE: This light shows only that the parking brake is on. It does not show the degree of brake application.

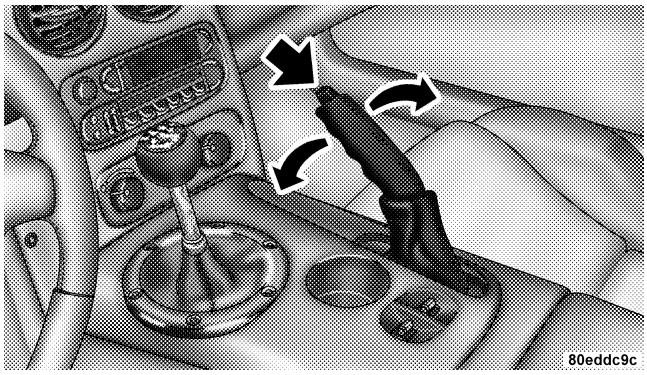

Parking Brake

Before leaving the vehicle, make sure you fully apply the parking brake. Place the transmission in REVERSE. Failure to do so may cause the vehicle to roll and cause damage or injury.

As an added precaution, turn the front wheels toward the curb on a downhill grade and away from the curb on an uphill grade.

Always apply the parking brake whenever you are not in the vehicle.

WARNING!

Leaving children in a vehicle unattended is dangerous for a number of reasons. A child or others could be injured. Children should be warned not to touch the parking brake release lever or the gear selection lever as doing so may move the vehicle. Don't leave the keys in the ignition. Be sure the parking brake is fully disengaged before driving: failure to do so can lead to brake failure, and an accident.

BRAKE SYSTEM

The Anti-Lock Brake System (ABS) is designed to aid the driver in maintaining vehicle control under adverse braking conditions. The system operates with a separate computer to modulate hydraulic pressure to prevent wheel lock-up and help avoid skidding on slippery surfaces.

All vehicle wheels and tires must be the same size and type as the original equipment wheels and tires must be properly inflated to produce accurate signals for the computer.

WARNING!

Significant over or under inflation of tires, or mixing sizes of front or rear tires or wheels on the vehicle can lead to loss of braking effectiveness.

The Anti-Lock Brake System conducts a low-speed self-test at about 12 mph (20 km/h). If you have your foot lightly on the brake while this test is occurring, you may feel slight pedal movement. The movement can be more apparent on ice and snow. This is normal.

The Anti-Lock Brake System pump motor runs during the self-test at 12 mph (20 km/h) and during an ABS stop. The pump motor makes a low humming noise during operation, which is normal.

WARNING!

Pumping of the Anti-Lock Brakes will diminish their effectiveness and may lead to an accident. Pumping makes the stopping distance longer. Just press firmly on your brake pedal when you need to slow down or stop.

CAUTION!

The Anti-Lock Brake System is subject to possible detrimental effects of electronic interference caused by improperly installed after-market radios or telephones.

WARNING!

- **Anti-lock system (ABS) cannot prevent the natural laws of physics from acting on the vehicle, nor can it increase braking or steering efficiency beyond that afforded by the condition of the vehicle brakes and tires or the traction afforded.**
- **The ABS cannot prevent accidents, including those resulting from excessive speed in turns, following another vehicle too closely, or hydroplaning. Only a safe, attentive, and skillful driver can prevent accidents.**
- **The capabilities of an ABS equipped vehicle must never be exploited in a reckless or dangerous manner which could jeopardize the user's safety or the safety of others.**

NOTE: During severe braking conditions, a pulsing sensation may occur and a clicking noise will be heard. This is normal, indicating that the Anti-Lock Brake System is functioning.

WARNING!

To use your brakes and accelerator more safely, follow these tips:

- **Do not "ride" the brakes by resting your foot on the pedal. This could overheat the brakes and result in unpredictable braking action, longer stopping distances, or brake damage.**
- **When descending mountains or hills, repeated braking can cause brake fade with loss of braking control. Avoid repeated heavy braking by downshifting the transmission whenever possible.**
- **Do not drive too fast for road conditions, especially when roads are wet or slushy. A wedge of water can build up between the tire tread and the road. This hydroplaning action can cause loss of traction, braking ability, and control.**
- **After going through deep water or a car wash, brakes may become wet, resulting in decreased performance and unpredictable braking action. Dry the brakes by gentle, intermittent pedal action while driving at very slow speeds.**

In the event power assist is lost for any reason (for example, repeated brake applications with the engine off), the brakes will still function. The effort required to brake the vehicle will be much greater than that required with the power system operating.

If either the front or rear hydraulic system loses normal capability, the remaining system will still function with some loss of overall braking effectiveness. This will be evident by increased pedal travel during application, greater pedal force required to slow or stop, and activation of the Brake Warning Lamp during brake use.

NOTE: Your Viper has a very high performance braking system. The brake pads are a semi-metallic compound which has been selected for superior fade resistance and consistent operation. A compromise is that under some weather and operating conditions, the brakes may squeal slightly during light brake applications.

Brake Pad Break-In

The brakes on your new Viper do not require a long break-in period, but avoid repeated hard brake applications from high speeds during initial break-in. Also avoid severe brake loading such as may be encountered when descending long mountain grades.

POWER STEERING

The power assisted steering system of your vehicle provides mechanical steering capability in the event power assist is lost.

If for some reason the hydraulic pressure is interrupted, it will still be possible to steer your vehicle. Under these conditions you will observe a substantial increase in steering effort.

TIRE SAFETY INFORMATION

Tire Markings

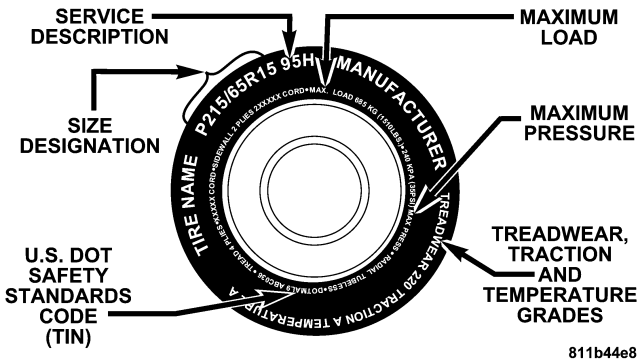

NOTE:

- P(Passenger)-Metric tire sizing is based on U.S. design standards. P-Metric tires have the letter "P" molded into the sidewall preceding the size designation. Example: P215/65R15 95H.
- European Metric tire sizing is based on European design standards. Tires designed to this standard have the tire size molded into the sidewall beginning with the section width. The letter ″P″ is absent from this tire size designation. Example: 215/65R15 96H
- LT(Light Truck)-Metric tire sizing is based on U.S. design standards. The size designation for LT-Metric tires is the same as for P-Metric tires except for the letters "LT" that are molded into the sidewall preceding the size designation. Example: LT235/85R16.
- Temporary Spare tires are high pressure compact spares designed for temporary emergency use only. Tires designed to this standard have the letter "T" molded into the sidewall preceding the size designation. Example: T145/80D18 103M.
- High Flotation tire sizing is based on U.S. design standards and begins with the tire diameter molded into the sidewall. Example: 31x10.5 R15 LT.

Tire Sizing Chart

EXAMPLE:
Size Designation: **P** = Passenger car tire size based on U.S. design standards **"....blank...."** = Passenger car tire based on European design standards **LT** = Light Truck tire based on U.S. design standards **T** = Temporary Spare tire **31** = Overall Diameter in Inches (in)
215 = Section Width in Milimeters (mm)
65 = Aspect Ratio in Percent (%) —Ratio of section height to section width of tire. **10.5** = Section Width in Inches (in)
R = Construction Code —"R" means Radial Construction. —"D" means Diagonal or Bias Construction.
15 = Rim Diameter in Inches (in)

EXAMPLE:
Service Description:
95 = Load Index —A numerical code associated with the maximum load a tire can carry.
H = Speed Symbol —A symbol indicating the range of speeds at which a tire can carry a load corresponding to its load index under certain operating conditions. —The maximum speed corresponding to the Speed Symbol should only be achieved under specified operating conditions. (ie. tire pressure, vehicle loading, road conditions and posted speed limits).
Load Identification:
"....blank...." = Absence of any text on sidewall of the tire indicates a Standard Load (SL) Tire
Extra Load (XL) = Extra Load (or Reinforced) Tire
Light Load = Light Load Tire
C,D,E = Load range associated with the maximum load a tire can carry at a specified pressure
Maximum Load — Maximum Load indicates the maximum load this tire is designed to carry.
Maximum Pressure — Maximum Pressure indicates the maximum permissible cold tire inflation pressure for this tire.

Tire Identification Number (TIN)

The TIN may be found on one or both sides of the tire however the date code may only be on one side. Tires with white sidewalls will have the full TIN including date code located on the white sidewall side of the tire. Look for the TIN on the outboard side of black sidewall tires as mounted on the vehicle. If the TIN is not found on the outboard side then you will find it on the inboard side of the tire.

EXAMPLE:
DOT MA L9 ABCD 0301
DOT = Department of Transportation —This symbol certifies that the tire is in compliance with the U.S. Department of Transportation tire safety standards, and is approved for highway use.
MA = Code representing the tire manufacturing location.(2 digits)
L9 = Code representing the tire size.(2 digits)
ABCD = Code used by tire manufacturer.(1 to 4 digits)
03 = Number representing the week in which the tire was manufactured.(2 digits) —03 means the 3rd week.
01 = Number representing the year in which the tire was manufactured.(2 digits) —01 means the year 2001. —Prior to July 2000, tire manufacturers were only required to have 1 number to represent the year in which the tire was manufactured. Example: 031 could represent the 3rd week of 1981 or 1991.

Tire Loading and Tire Pressure

Tire Placard Location

NOTE: The proper cold tire inflation pressure for passenger cars is listed on either the face of the driver's door or the driver's side "B" pillar. For vehicles other than passenger cars, the cold tire inflation pressures are listed on either the "B" pillar, the Certification Label or in the Tire Inflation Pressures brochure in the glove compartment.

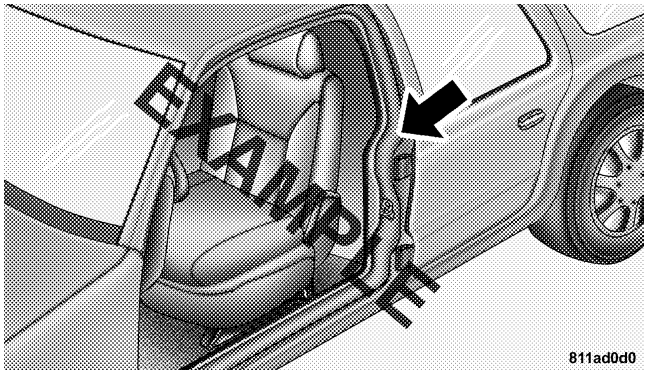

Tire Placard Location

Tire and Loading Information Placard

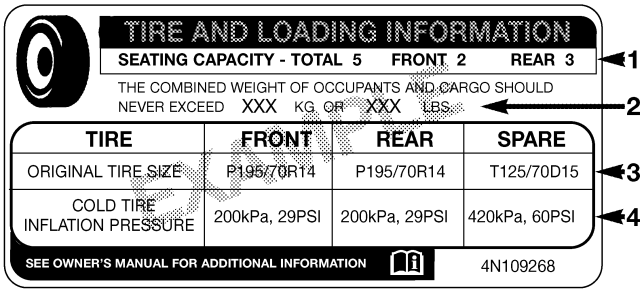

811b5a9a

Tire and Loading Information

This placard tells you important information about the,
1) number of people that can be carried in the vehicle
2) the total weight your vehicle can carry
3) the tire size designed for your vehicle
4) the cold tire inflation pressures for the front, rear and spare tires.

Loading

The vehicle maximum load on the tire must not exceed the load carrying capacity of the tire on your vehicle. You will not exceed the tire's load carrying capacity if you adhere to the loading conditions, tire size and cold tire inflation pressures specified on the Tire and Loading Information placard and the Vehicle Loading section of this manual.

NOTE: Under a maximum loaded vehicle condition, gross axle weight ratings (GAWR's) for the front and rear axles must not be exceeded. For further information on GAWR's, vehicle loading and trailer towing, see the Vehicle Loading section of this manual.

To determine the maximum loading conditions of your vehicle, locate the statement "The combined weight of occupants and cargo should never exceed XXX kg or XXX

lbs." on the Tire and Loading Information placard. The combined weight of occupants, cargo/luggage and trailer tongue weight (if applicable) should never exceed the weight referenced here.

Steps for Determining Correct Load Limit

1. Locate the statement "The combined weight of occupants and cargo should never exceed XXX pounds" on your vehicle's placard.

2. Determine the combined weight of the driver and passengers that will be riding in your vehicle.

3. Subtract the combined weight of the driver and passengers from XXX kilograms or XXX pounds.

4. The resulting figure equals the available amount of cargo and luggage load capacity. For example, if "XXX" amount equals 1400 lbs. and there will be five 150 lb. passengers in your vehicle, the amount of available cargo and luggage load capacity is 650 lb. (since 5 x 150 = 750, and 1400 – 750 = 650 lb.)

5. Determine the combined weight of luggage and cargo being loaded on the vehicle. That weight may not safely exceed the available cargo and luggage load capacity calculated in step 4.

6. If your vehicle will be towing a trailer, load from your trailer will be transferred to your vehicle. Consult this manual to determine how this reduces the available cargo and luggage load capacity of your vehicle.

NOTE: The following table shows examples on how to calculate total load, cargo/luggage and towing capacities of your vehicle with varying seating configurations and number and size of occupants. This table is for illustration purposes only and may not be accurate for the seating and load carry capacity of your vehicle.

NOTE: For the following example the combined weight of occupants and cargo should never exceed 865 lbs. (392 Kg).

Occupants			Combined weight of occupants and cargo from Tire Placard	MINUS	Combined Occupant's weight	=	AVAILABLE Cargo/Luggage and Trailer Tongue Weight
TOTAL	FRONT	REAR					
EXAMPLE 1							
5	2	3			Occupant 1: 200 lbs Occupant 2: 130 lbs Occupant 3: 160 lbs Occupant 4: 100 lbs Occupant 5: 80 lbs TOTAL WEIGHT: 670 lbs		
			865 lbs	minus	670 lbs	=	195 lbs
EXAMPLE 2							
3	2	1			Occupant 1: 210 lbs Occupant 2: 180 lbs Occupant 3: 150 lbs TOTAL WEIGHT: 540 lbs		
			865 lbs	minus	540 lbs	=	325 lbs
EXAMPLE 3							
2	2	0			Occupant 1: 200 lbs Occupant 2: 200 lbs TOTAL WEIGHT: 400 lbs		
			865 lbs	minus	400 lbs	=	465 lbs

EXAMPLE

811a4d11

WARNING!

Overloading of your tires is dangerous. Overloading can cause tire failure, affect vehicle handling, and increase your stopping distance. Use tires of the recommended load capacity for your vehicle. Never overload them.

TIRES—GENERAL INFORMATION

Tire Pressure

Proper tire inflation pressure is essential to the safe and satisfactory operation of your vehicle. Three primary areas are affected by improper tire pressure:

1. Safety—

WARNING!

Improperly inflated tires are dangerous and can cause accidents.

- **Under inflation increases tire flexing and can result in tire failure.**
- **Over inflation reduces a tire's ability to cushion shock. Objects on the road and chuck holes can cause damage that results in tire failure.**
- **Unequal tire pressures can cause steering problems. You could lose control of your vehicle.**
- **Over inflated or under inflated tires can affect vehicle handling and can fail suddenly, resulting in loss of vehicle control.**
- **Unequal tire pressures from one side of the vehicle to the other can cause the vehicle to drift to the right or left.**

Always drive with each tire inflated to the recommended cold tire inflation pressure.

2. Economy—
Improper inflation pressures can cause uneven wear patterns to develop across the tire tread. These abnormal wear patterns will reduce tread life resulting in a need for earlier tire replacement. Underinflation also increases tire rolling resistance and results in higher fuel consumption.

3. Ride Comfort and Vehicle Stability—
Proper tire inflation contributes to a comfortable ride. Overinflation produces a jarring and uncomfortable ride.

Tire Inflation Pressures

The proper cold tire inflation pressure for passenger cars is listed on either the face of the driver's door or the driver's side "B" pillar. For vehicles other than passenger cars, the cold tire inflation pressures are listed on either the "B" pillar, the Certification Label or in the Tire Inflation Pressures brochure in the glove compartment.

Some vehicles may have Supplemental Tire Pressure Information for vehicle loads that are less than the maximum loaded vehicle condition. These pressure conditions will be found in the "Supplemental Tire Pressure Information" section of this manual.

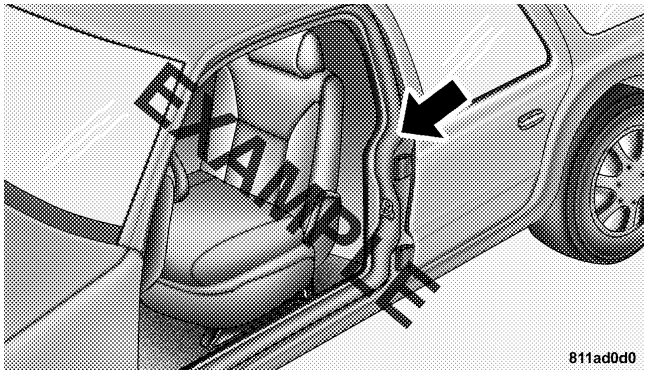

Tire Placard Location

The pressure should be checked and adjusted as well as inspecting for signs of tire wear or visible damage at least once a month. Use a good quality pocket-type gauge to

check tire pressure. Do not make a visual judgement when determining proper inflation. Radial tires may look properly inflated even when they are underinflated.

CAUTION!

After inspecting or adjusting the tire pressure always reinstall the valve stem cap–if equipped. This will prevent moisture and dirt from entering the valve stem, which could damage the valve stem.

Inflation pressures specified on the placard are always "cold tire inflation pressure". Cold tire inflation pressure is defined as the tire pressure after the vehicle has not been driven for at least 3 hours, or driven less than 1mile (1 km) after a 3 hour period. The cold tire inflation pressure must not exceed the maximum inflation pressure molded into the tire side wall.

Check tire pressures more often if subject to a wide range of outdoor temperatures, as tire pressures vary with temperature changes.

Tire pressures change by approximately 1 psi (7 kPa) per 12° F (7° C) of air temperature change. Keep this in mind when checking tire pressure inside a garage especially in the winter.

Example: If garage temperature = 68° F (20° C) and the outside temperature = 32° F (0° C) then the cold tire inflation pressure should be increased by 3 psi (21 kPa), which equals 1 psi (7 kPa) for every 12° F (7° C) for this outside temperature condition.

Tire pressure may increase from 2 to 6 psi (13 to 40 kPa) during operation. DO NOT reduce this normal pressure build up or your tire pressure will be too low.

Tire Pressures for High Speed Operation

The manufacturer advocates driving at safe speeds within posted speed limits. Where speed limits or conditions are such that the vehicle can be driven at high speeds, maintaining correct tire inflation pressure is very important. Increased tire pressure and reduced vehicle loading may be required for high speed vehicle operation. Refer to original equipment or an authorized tire dealer for recommended safe operating speeds, loading and cold tire inflation pressures.

WARNING!

High speed driving with your vehicle under maximum load is dangerous. The added strain on your tires could cause them to fail. You could have a serious accident. Don't drive a vehicle loaded to the maximum capacity at continuous speeds above 75 mph (120 km/h).

Radial-Ply Tires

WARNING!

Combining radial ply tires with other types of tires on your vehicle will cause your vehicle to handle poorly. The instability could cause an accident. Always use radial ply tires in sets of four (or 6, in case of trucks with dual rear wheels). Never combine them with other types of tires.

Cuts and punctures in radial tires are repairable only in the tread area because of sidewall flexing. Consult your authorized tire dealer for radial tire repairs.

Compact Spare Tire — If Equipped

The compact spare is for temporary emergency use with radial tires. It is engineered to be used on your style vehicle only. Since this tire has limited tread life, the original tire should be repaired (or replaced) and reinstalled at the first opportunity.

WARNING!

Temporary use spare tires are for emergency use only. With these tires, do not drive more than 50 mph (80 km/h). Temporary-use spare tires have limited tread life. When two or more tread wear indicators appear in adjacent grooves, the temporary use spare tire needs to be replaced. Be sure to follow the warnings which apply to your spare. Failure to do so could result in spare tire failure and loss of vehicle control.

Do not install a wheel cover or attempt to mount a conventional tire on the compact spare wheel, since the wheel is designed specifically for the compact spare.

Do not install more than one compact spare tire/wheel on the vehicle at any given time.

CAUTION!

Because of the reduced ground clearance, do not take your vehicle through an automatic car wash with the compact spare installed. Damage to the vehicle may result.

Limited Use Spare — If Equipped

The limited use spare tire is for temporary emergency use on your vehicle. This tire is identified by a limited use spare tire warning label located on the limited use spare tire and wheel assembly. This tire may look like the original equipped tire on the front or rear axle of your vehicle, but it is not. Installation of this limited use spare tire affects vehicle handling. Since it is not the same tire, replace (or repair) the original tire and reinstall on vehicle at the first opportunity.

WARNING!

The limited use spare tires are for emergency use only. Installation of this limited use spare tire affects vehicle handling. With this tire, do not drive more than 60 mph (100 km/h). Keep inflated to the cold tire inflation pressure listed on either your tire placard or limited use spare tire and wheel assembly. Replace (or repair) the original tire at the first opportunity and reinstall it on your vehicle. Failure to do so could result in loss of vehicle control.

Tire Spinning

When stuck in mud, sand, snow, or ice conditions, do not spin your vehicle's wheels above 35 mph (55 km/h).

See the paragraph on Freeing A Stuck Vehicle in Section 6 of this manual.

WARNING!

Fast spinning tires can be dangerous. Forces generated by excessive wheel speeds may cause tire damage or failure. A tire could explode and injure someone. Do not spin your vehicle's wheels faster than 35 mph (55 km/h) when you are stuck. And don't let anyone near a spinning wheel, no matter what the speed.

Tread Wear Indicators

Tread wear indicators are in the original equipment tires to help you in determining when your tires should be replaced.

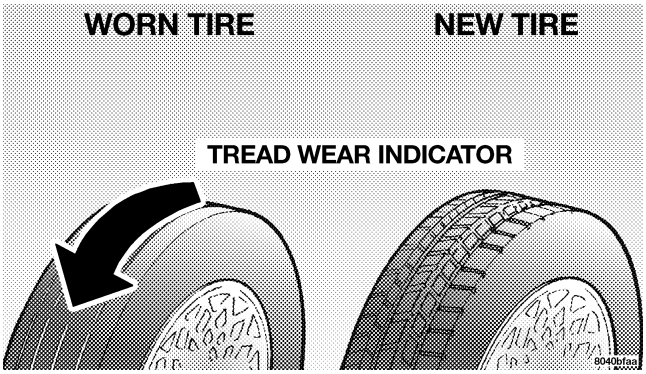

These indicators are molded into the bottom of the tread grooves and will appear as bands when the tread depth becomes 1/16 inch (2 mm). When the indicators appear in 2 or more adjacent grooves, the tire should be replaced. Many states have laws requiring tire replacement at this point.

Replacement Tires

The tires on your new vehicle provide a balance of many characteristics. They should be inspected regularly for wear and correct cold tire inflation pressure. The manufacturer strongly recommends that you use tires equivalent to the originals in size, quality and performance when replacement is needed (see the paragraph on tread wear indicators). Refer to the Tire and Loading Information placard for the size designation of your tire. The service description and load identification will be found on the original equipment tire. Failure to use equivalent replacement tires may adversely affect the safety, handling, and ride of your vehicle. We recommend that you contact your original equipment or an authorized tire dealer with any questions you may have on tire specifications or capability.

WARNING!

- **Do not use a tire, wheel size or rating other than that specified for your vehicle. Some combinations of unapproved tires and wheels may change suspension dimensions and performance characteristics, resulting in changes to steering, handling, and braking of your vehicle. This can cause unpredictable handling and stress to steering and suspension components. You could lose control and have an accident resulting in serious injury or death. Use only the tire and wheel sizes with load ratings approved for your vehicle.**
- **Never use a tire with a smaller load index or capacity, other than what was originally equipped on your vehicle. Using a tire with a smaller load index could result in tire overloading and failure. You could lose control and have an accident.**
- **Failure to equip your vehicle with tires having adequate speed capability can result in sudden tire failure and loss of vehicle control.**

CAUTION!

Replacing original tires with tires of a different size may result in false speedometer and odometer readings.

Alignment And Balance

Poor suspension alignment may result in:

- Fast tire wear.
- Uneven tire wear, such as feathering and one-sided wear.
- Vehicle pull to right or left.

Tires may also cause the vehicle to pull to the left or right. Alignment will not correct this condition. See your dealer for proper diagnosis.

Improper alignment will not cause vehicle vibration. Vibration may be a result of tire and wheel out-of-balance. Proper balancing will reduce vibration and avoid tire cupping and spotty wear.

Low Tire Pressure (LTP) System

Low Tire Indicator

The Low Tire indicator in the Liquid Crystal Display (LCD) of the instrument cluster will flash slowly and a single chime will sound to warn if tire pressure falls below 20 psi (138 kpa). The indicator will flash more rapidly and a continuous tone will sound to warn if tire pressure falls below 14 psi (97 kpa). Seek repair as soon as possible.

If the indicator stays on and one chime will sound, a system failure has occurred. See your dealer for service.

Although the tires are designed with a "run flat" feature that allows the vehicle to be driven about 50 miles (80 km) at 55 m.p.h. (88 kph), immediate service should be obtained if the Low Tire indicator is activated.

WARNING!

Do not exceed 55 m.p.h. (88 k.p.h.) if the LOW Tire indicator in the instrument cluster is illuminated. Vehicle handling and braking may be reduced. You could have an accident and be severely or fatally injured.

NOTE: The "run flat" feature eliminates the need for a spare tire and jack. This vehicle is not equipped with either a spare tire or jack.

CAUTION!

The Low Tire Pressure (LTP) system has been optimized for the original equipment tires and wheels. The LTP system pressures have been established for the tire size equipped on your vehicle. Undesirable operation or sensor damage may result when using replacement equipment that is not of the same size, type, and/or style. After-market wheels can cause sensor damage. Do not use tire sealant or balance beads if your vehicle is equipped with the LTP system as damage to the sensors may result.

TIRE CHAINS

Due to limited clearance, tire chains are not recommended.

CAUTION!

Damage to the vehicle may result if tire chains are used.

SNOW TIRES

There are no snow tires that are compatible with the wheels on this vehicle.

Tire Storage

Tire storage is addressed in the Michelin Limited Tire Warranty Booklet.

Specific recommendations on guidelines for long term tire storage for this vehicle should be requested of the Michelin Tire Corporation 1-800-433-6838.

Tire Rotation Recommendations

Do not rotate these tires as the wider rear tires will not fit on the front of the vehicle.

Your vehicle has tires with directional tread, which will also not allow switching tires from side to side.

GROUND CLEARANCE

The Viper is a low vehicle and ground clearance is limited.

CAUTION!

Damage to the front and rear fascias and side sills can occur if you disregard the low ground clearance of your Viper. Pay close attention when parking to avoid running into parking curbs. Exercise caution when entering or exiting steep driveways or when pulling off the road onto soft shoulders.

FUEL REQUIREMENTS

Your vehicle is designed to meet all emission regulations and provide excellent fuel economy when using high quality premium unleaded gasoline having an octane rating of 91 or higher.

Spark Knock

Light spark knock at low engine speeds is not harmful to your engine. However, continued heavy spark knock at high speeds can cause damage and immediate service is required.

Poor quality gasoline can cause problems such as hard starting, stalling and hesitations. If you experience these symptoms, try another brand of "regular" gasoline before considering service for the vehicle.

Over 40 automobile manufacturers around the world have issued and endorsed consistent gasoline specifications (the World Wide Fuel Charter, WWFC) to define fuel properties necessary to deliver enhanced emissions, engine performance, and durability for your vehicle. The manufacturer recommends the use of gasolines that meet the WWFC specifications if they are available.

Reformulated Gasoline

Many areas of the country require the use of cleaner burning fuel referred to as Reformulated Gasoline.

Reformulated gasolines contain oxygenates, and are specially blended to reduce vehicle emissions and improve air quality.

The manufacturer strongly supports the use of reformulated gasolines. Properly blended reformulated gasolines will provide excellent performance and durability of engine and fuel system components.

Gasoline/Oxygenate Blends

Some fuel suppliers blend unleaded gasoline with materials called oxygenates such as 10% alcohol, MTBE, ETBE or TAME. Oxygenates are required in some areas of the country during the winter months to reduce carbon monoxide emissions. Fuels blended with these oxygenates may be used in your vehicle.

CAUTION!

DO NOT use gasolines containing METHANOL. Gasoline containing methanol may damage critical fuel system components.

MMT In Gasoline

MMT is a manganese containing metallic additive that is blended into some gasoline to increase the octane. Gasolines blended with MMT offer no performance advantage beyond gasolines of the same octane number without MMT. Gasolines blended with MMT reduce spark plug life and reduce emission system performance in some vehicles. The manufacturer recommends that gasolines without MMT be used in your vehicle. The MMT content of gasoline may not be indicated on the gasoline pump, therefore, you should ask your gasoline retailer whether or not his/her gasoline contains MMT.

It is even more important to look for gasolines without MMT in Canada because MMT can be used at higher levels than are allowed in the United States. MMT is prohibited in Federal and California reformulated gasolines.

Materials Added to Fuel

All gasoline sold in the United States and Canada is required to contain effective detergent additives. The use of additional detergents or other additives is not needed under normal conditions.

Fuel System Cautions

CAUTION!

Follow these guidelines to maintain your vehicle's performance:

- The use of leaded gas is prohibited by Federal law. Using leaded gasoline can impair engine performance, or damage the emission control system.
- An out-of-tune engine, or certain fuel or ignition malfunctions, can cause the catalytic converter to overheat. If you notice a pungent burning odor or some light smoke, your engine may be out-of-tune or malfunctioning and may require immediate service. Contact your dealer for service assistance.
- The use of fuel additives which are now being sold as octane enhancers are not recommended. Most of these products contain high concentrations of methanol. Fuel system damage or vehicle performance problems resulting from the use of such fuels or additives are not the responsibility of the manufacturer.

NOTE: Intentional tampering with emissions control systems can result in civil penalties being assessed against you.

Carbon Monoxide Warnings

WARNING!

Carbon monoxide (CO) in exhaust gases is deadly. Follow the precautions below to prevent carbon monoxide poisoning:

- Do not inhale exhaust gases. They contain carbon monoxide, a colorless and odorless gas which can kill. Never run the engine in a closed area, such as a garage, and never sit in a parked vehicle with the engine running for an extended period. If the vehicle is stopped in an open area with the engine running for more than a short period, adjust the ventilation system to force fresh, outside air into the vehicle.
- Guard against carbon monoxide with proper maintenance. Have the exhaust system inspected every time the vehicle is raised. Have any abnormal conditions repaired promptly. Until repaired, drive with all side windows fully open.
- Keep the trunk closed when driving your vehicle to prevent carbon monoxide and other poisonous exhaust gases from entering the vehicle.

ADDING FUEL

The fuel tank filler tube has a restricting door about 2 inches (50mm) inside the opening. If using a portable container, it should have a flexible nozzle long enough to force open the restricting door.

WARNING!

Remove the fuel tank filler tube cap (gas cap) slowly to prevent fuel spray from the filler neck that may cause injury. The volatility of some gasolines may cause a buildup of pressure in the fuel tank that may increase while you drive the vehicle. This pressure can result in a spray of gasoline and/or vapors when you remove the cap from a hot vehicle. Removing the cap slowly allows the pressure to vent and prevents fuel spray. Never have any smoking materials lit in or near the vehicle when the fuel tank filler tube cap (gas cap) is removed or when filling the tank. Never fill the gas tank while the engine is running.

VEHICLE LOADING

Vehicle Loading Capacities

Front Seat Occupants	2
Luggage	115 lbs. (51 kg)
Rated Vehicle Capacity	415 lbs. (187kg)

TRAILER TOWING

Trailer towing with your Viper is not recommended.

WHAT TO DO IN EMERGENCIES

CONTENTS

- Hazard Warning Flasher 148
- If Your Engine Overheats 148
- Jump-Starting Procedures 150
- Driving On Slippery Surfaces 154
  - Traction 154
- Freeing A Stuck Vehicle 155
- Towing A Disabled Vehicle 155

HAZARD WARNING FLASHER

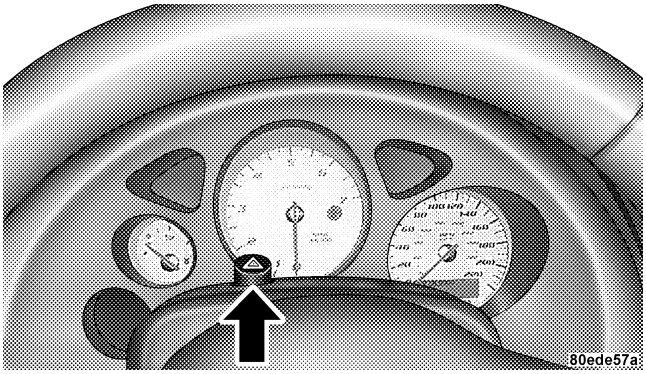

Hazard Flasher Switch

The flasher switch is on the top of the steering column, just behind the steering wheel. Depress the flasher button and all front and rear directional signals will flash. Depress the flasher button again to turn the flashers off.

Do not use this emergency warning system when the vehicle is in motion. Use it when your vehicle is disabled and is creating a safety hazard for other motorists.

If it is necessary to leave the vehicle to go for service, the flasher system will continue to operate with the ignition key removed.

NOTE: With extended use, the flasher may run down your battery.

IF YOUR ENGINE OVERHEATS

In any of the following situations, you can reduce the potential for overheating by taking the appropriate action.

- **On the highways —** Slow down and use the highest gear possible.
- **In city traffic —** While stopped, put the transmission in neutral, but do not increase engine idle speed.

- **In city traffic—** While moving, shift into the highest gear possible to reduce engine RPM.

NOTE: There are steps that you can take to slow down an impending overheat condition. If your air conditioner is on, turn it off. The air conditioning system adds heat to the cooling system and turning off the A/C removes this heat. You can also turn the Temperature control to maximum heat, the Mode control to floor, and the fan control to High. This allows the heater core to act as a supplement to the radiator and aids in removing heat from the cooling system.

WARNING!

A hot cooling system is dangerous. You or others could be badly burned by steam or boiling coolant. If your temperature gauge pointer is in the red area, turn off the engine immediately. You may want to call a service center for service. If you decide to look under the hood yourself, see Section 7 of this manual. Follow the warnings under the Radiator Cap paragraph.

JUMP-STARTING PROCEDURES

WARNING!

- **Do not attempt to push or tow your vehicle to get it started. Unburned fuel could enter the catalytic converter and once the engine has started, ignite and damage the converter and vehicle. If the vehicle has a discharged battery, booster cables may be used to obtain a start from a booster battery or the battery in another vehicle. This type of start can be dangerous if done improperly, so follow this procedure carefully.**
- **Take care to avoid the radiator cooling fan and accessory drive whenever the hood is raised. You can be hurt by the moving components.**

WARNING!

- **Battery fluid is a corrosive acid solution; do not allow battery fluid to contact eyes, skin or clothing. Don't lean over battery when attaching clamps or allow the clamps to touch each other. If acid splashes in eyes or on skin, flush contaminated area immediately with large quantities of water.**
- **A battery generates hydrogen gas that is flammable and explosive. Keep flame or spark away from the top of the battery. Do not use a booster battery or any other booster source with an output that exceeds 12 volts.**

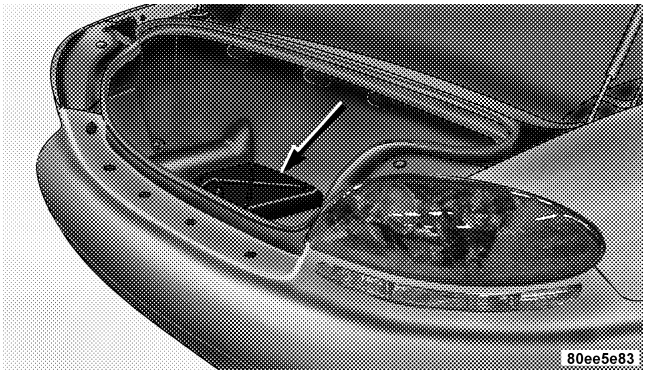

Battery Location

The battery is located under the battery access panel inside the trunk on the left side. Remote battery terminals are located in the engine compartment for jump starting.

NOTE: Remove the floor portion of the trunk carpet to gain access to the battery.

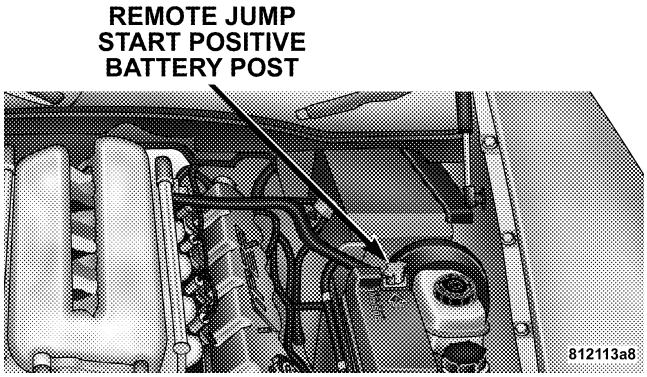

1. Wear eye protection and remove any metal jewelry such as watch bands or bracelets that might make an inadvertent electrical contact.

2. When boost is provided by a battery in another vehicle, park that vehicle within booster cable reach but

without letting the vehicles touch. Set the parking brake, place the transmission in neutral and turn the ignition OFF for both vehicles.

3. Turn off the heater, radio and all unnecessary electrical loads.

4. If you are jump starting your Viper, connect one end of a jumper cable to the positive terminal of the booster battery. Connect the other end of the same cable to the remote battery positive terminal after removing the plastic cover.

5. If you are jump starting another vehicle, connect one end of a jumper cable to the remote battery positive terminal post on the Power Distribution Center. Connect the other end of the same cable to the positive terminal of the discharged battery after removing the plastic cover.

6. Connect the other cable, first to the negative terminal of the booster battery and then to the ground (on the ear of the Thermostat Housing) of your Viper as shown. Make sure you have a good contact.

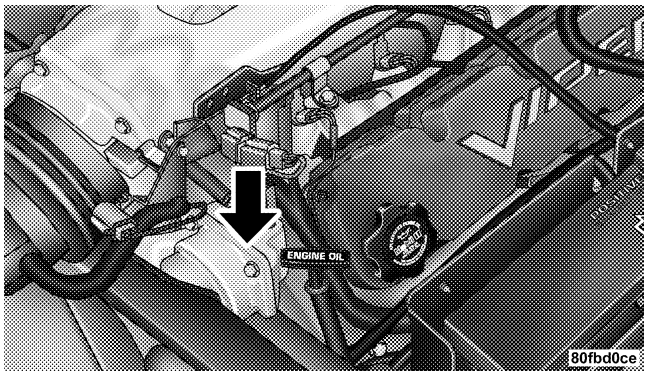

Ground Connection

7. If you are jump starting another vehicle, connect one end of a jumper cable to the ground (on the ear of the

Thermostat Housing shown in illustration) of your Viper and the other end to the engine of the other vehicle. Make sure that you have a good contact on the engines.

NOTE: When using another vehicle as the power source, turn off all accessories.

8. Turn off the Theft Security System.

NOTE: If system is not turned off, the Theft System electronics will prevent the engine from starting.

9. Allow battery to charge to at least 12.4 volts before attempting to start engine.

10. Start the engine in the booster vehicle and let the engine idle for a few minutes. Then start the Viper engine. If engine does not start in 15 seconds, stop cranking engine and allow starter to cool down before cranking again.

11. When removing the booster cables, reverse the above sequence exactly.

DRIVING ON SLIPPERY SURFACES

WARNING!

Rapid acceleration on slippery surfaces is dangerous. You could lose control of the vehicle and possibly have an accident. Accelerate slowly and carefully whenever there is likely to be poor traction (ice, snow, wet, mud, loose sand, etc.).

Traction

When driving on wet or slushy roads, it is possible for a wedge of water to build up between the tire and road surface. This is hydroplaning and may cause partial or complete loss of vehicle control and stopping ability. To reduce this possibility, the following precautions should be observed:

- Slow down during rainstorms or when roads are slushy.
- Slow down if road has standing water or puddles.

CAUTION!

Driving your Viper through deep puddles at speeds over 5 mph, may cause water to be ingested into the engine. This can cause severe engine damage.

- Replace tires when tread wear indicators first become visible.
- Keep tires properly inflated.
- Maintain enough distance between your vehicle and the vehicle in front to avoid a collision in a sudden stop.

FREEING A STUCK VEHICLE

If your vehicle becomes stuck in mud, sand or snow, it can often be moved by a rocking motion. Turn your steering wheel right and left to clear the area around the front wheels. Then shift back and forth between Reverse and First gear. Usually the least accelerator pedal pressure to maintain the rocking motion without spinning the wheels is most effective.

CAUTION!

Racing the engine or spinning the wheels too fast may lead to transmission/axle overheating and failure. It can also damage the tires. Do not spin the wheels above 30 mph (48 km/h).

TOWING A DISABLED VEHICLE

Do not tow with sling type equipment. Only use flat bed equipment. Always comply with applicable state or local towing ordinances.

CAUTION!

Towing with equipment other than flat bed types may damage your vehicle.

MAINTAINING YOUR VEHICLE

CONTENTS

- 8.3L Engine Compartment 160
- Onboard Diagnostic System (OBD II) 161
- Emissions Inspection And Maintenance Programs 162
- Replacement Parts 163
- Dealer Service 163
- Maintenance Procedures 164
  - Engine Oil 164
  - Drive Belts — Check Condition And Tension . .168
  - Spark Plugs 168
  - Catalytic Converter 168
  - Ignition Wiring System And Ignition Timing . .170
  - Crankcase Emission Control System 171
  - Air Cleaner Filter 171
  - Maintenance-Free Battery 171
  - Battery Save Feature 174
  - Air Conditioner 176
  - Power Steering (Pump And Reservoir) 178

- Body Lubrication 179
- Front And Rear Suspension Ball Joints 179
- Steering Linkage 180
- Body Mechanism Lubrication 180
- Windshield Washers 182
- Exhaust System 182
- Cooling System 183
- Hoses And Vacuum/Vapor Harnesses 188
- Brake System 188
- Brake, Power Steering, And Fuel System Hoses 189
- Brake And Clutch Fluid 190
- Master Cylinder 191
- Hydraulic Clutch 192
- Transmission 193
- Rear Axle 193
- Wheel Bearings 194
- Appearance Care 194

■ Fuses — Power Distribution Center 197

■ Vehicle Storage 202

■ Replacement Bulbs 204
- Interior Light Bulbs 204
- Exterior Light Bulbs 205

■ Exterior Light Bulb Service 205
- Headlight, Parking, Front Park, Turn Signal, Front Sidemarker And Front Fog Light Removal 205

- ◻ High Intensity Discharge Headlights (HID) . . . 207
- ◻ Tail, Tail/Stop, And Marker Lamp Bulb Replacement 207
- ◻ Backup And Rear Turn Signal Lamp Bulb Replacement 208
- ◻ License Plate Light 211

■ Headlight Aiming 212

- ◻ Aiming Check 212

■ Fluids And Capacities 212

■ Recommended Fluids, Lubricants And Genuine Parts 213

- ◻ Engine 213
- ◻ Chassis 214
- ◻ Body 215

8.3L ENGINE COMPARTMENT

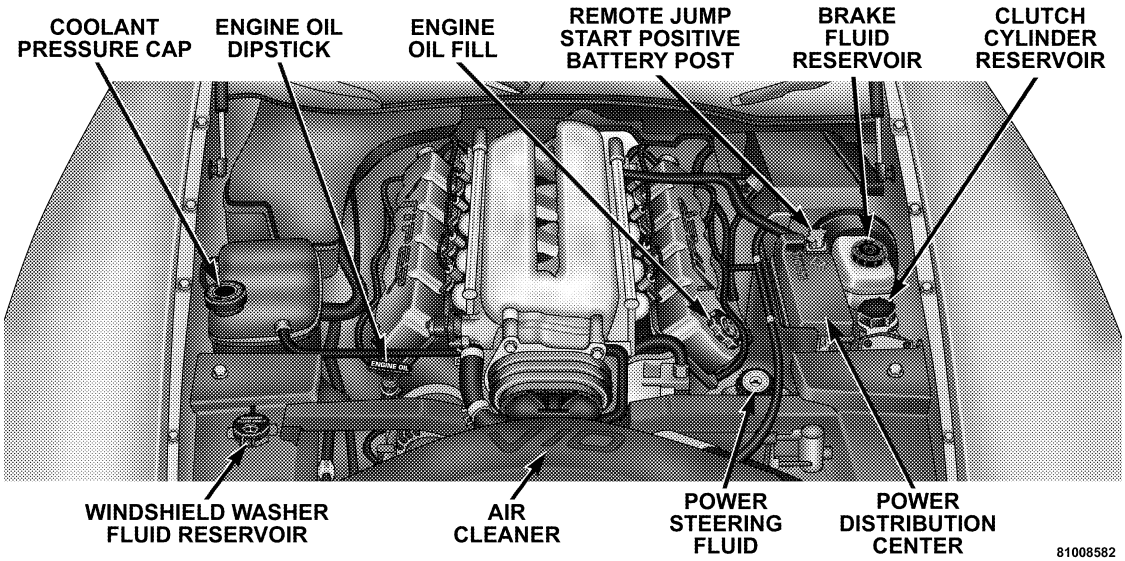

8.3L Engine Compartment

ONBOARD DIAGNOSTIC SYSTEM (OBD II)

To meet new government regulations and promote cleaner air, your vehicle is equipped with a sophisticated onboard diagnostic system called OBD II. This system monitors the performance of the emissions and engine control systems. When these systems are operating properly, your vehicle will provide excellent performance and fuel economy, as well as engine emissions well within current government regulations.

If any of these systems require service, the OBD II system will turn on the Malfunction Indicator Light. It will also store diagnostic codes and other information to assist your service technician in making repairs. Although your vehicle will usually be driveable and not need towing, see your dealer for service as soon as possible.

CAUTION!

Prolonged driving with the light on could cause further damage to the emission control system. It could also affect fuel economy and driveability. The vehicle must be serviced before any state emissions tests can be performed.

If the light is flashing, severe catalytic converter damage and power loss will soon occur. Immediate service is required.

If the gas cap is not tightened properly, the light may come on. Be sure the gas cap is tightened every time you add fuel.

EMISSIONS INSPECTION AND MAINTENANCE PROGRAMS

In some localities, it may be a legal requirement to pass an inspection of your vehicle's emissions control system. Failure to pass could prevent vehicle registration.

For states which have an I/M (Inspection and Maintenance) requirement, this check verifies the following: the MIL (Malfunction Indicator Lamp) is functioning and is not on when the engine is running, and that the OBD (On Board Diagnostic) system is ready for testing.

Normally, the OBD system will be ready. The OBD system may **not** be ready if your vehicle was recently serviced, if you recently had a dead battery, or a battery replacement. If the OBD system should be determined not ready for the I/M test, your vehicle may fail the test.

Your vehicle has a simple ignition key actuated test which you can use prior to going to the test station. To check if your vehicle's OBD system is ready, you must do the following:

1. Insert your ignition key into the ignition switch.

2. Turn the ignition to the ON position, but do not crank or start the engine.

3. If you crank or start the engine, you will have to start this test over.

4. As soon as you turn your key to the ON position, you will see your MIL symbol come on as part of a normal bulb check.

5. Approximately 15 seconds later, one of two things will happen:

   a. The MIL will flash for about 10 seconds and then return to being fully illuminated until you turn off the

ignition key or start the engine. This means that your vehicle's OBD system is **not ready** and you should **not** proceed to the I/M station.

b. The MIL will not flash at all and will remain fully illuminated until you turn off the ignition key or start the engine. This means that your vehicle's OBD system is **ready** and you can proceed to the I/M station.

If your OBD system is **not ready,** you should see your authorized dealer or repair facility. If your vehicle was recently serviced or had a battery failure or replacement, you may need to do nothing more than drive your vehicle as you normally would in order for your OBD system to update. A recheck with the above test routine may then indicate that the system is now ready.

Regardless of whether your vehicle's OBD system is ready or not ready, if the MIL symbol is illuminated during normal vehicle operation, you should have your vehicle serviced before going to the I/M station. The I/M station can fail your vehicle because the MIL symbol is on with the engine running.

REPLACEMENT PARTS

Use of genuine Mopar® parts for normal/scheduled maintenance and repairs is highly recommended to insure the designed performance. Damage or failures caused by the use of non-Mopar® parts for maintenance and repairs will not be covered by the manufacturer's warranty.

DEALER SERVICE

Your dealer has the qualified service personnel, special tools and equipment to perform all service operations in an expert manner. Service Manuals are available which include detailed service information for your vehicle. Refer to these manuals before attempting any procedure yourself.

NOTE: Intentional tampering with emissions control systems can result in civil penalties being assessed against you.

WARNING!
You can be badly injured working on or around a motor vehicle. Do only that service work for which you have the knowledge and the proper equipment. If you have any doubt about your ability to perform a service job, take your vehicle to a competent mechanic.

MAINTENANCE PROCEDURES

The pages that follow contain the maintenance service recommendations by the engineers who designed your vehicle.

Besides the maintenance items for which there are fixed maintenance intervals, there are other items that should operate satisfactorily without periodic maintenance. However, if a malfunction of these items does occur, it could adversely affect the engine or vehicle performance. These items should be inspected if a malfunction is observed or suspected.

Engine Oil

Checking Oil Level

To assure proper lubrication of your vehicle's engine, the engine oil must be maintained, at the correct level. Check the oil level at regular intervals, such as every fuel stop.

The best time to check the oil level is approximately 5 minutes after a fully warmed up engine is turned off or before starting the engine after it has sat overnight.

Checking the oil while the vehicle is on level ground also will improve the accuracy of the oil level readings. Add oil only when the level is below the SAFE mark.

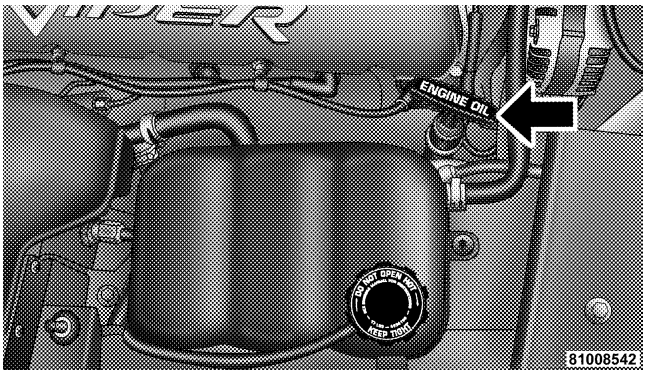

Engine Oil Dipstick

Changing Engine Oil

Road conditions and your kind of driving affects the interval at which your oil should be changed.

If **ANY** of the following apply to you, then change your engine oil every 3,000 miles (5 000 km) or 3 months, whichever comes first and follow the maintenance recommendations in Schedule **B**.

- Day or night temperatures are below 32°F (0°C)
- Stop and go driving
- Extensive engine idling
- Driving in dusty conditions
- Short trip driving of less than 10 miles (16.2 km)
- More than 50% of your driving is at sustained high speeds during hot weather, above 90°F (32°C)
- Taxi, Police, or delivery service (commercial service)

- Trailer towing
- Off-road or desert driving
- If equipped for and operating with E–85 (ethanol) fuel

If none of these apply to you, then change your engine oil every 6,000 miles (10 000 km) or 6 months, whichever comes first and follow the maintenance recommendations in Schedule **A**.

CAUTION!
Overfilling the crankcase will cause oil aeration and loss of oil pressure. This could damage your engine.

Engine Oil Selection

For best performance and maximum protection under all types of operating conditions, the manufacturer only recommends full synthetic engine oils that are API rated as SL/CF and meet the requirements of DaimlerChrysler Material Standard MS-10725. Use Mopar or an equivalent oil meeting the specification MS-10725.

If you choose to operate this vehicle in a very aggressive driving style, the manufacturer recommends the use of a full synthetic engine oil, such as Mobil 1® SAE 0W-40.

Engine Oil Viscosity Chart

The proper SAE viscosity grade of engine oil should be selected based on the following recommendation and be within the operating temperature shown in the engine oil viscosity chart.

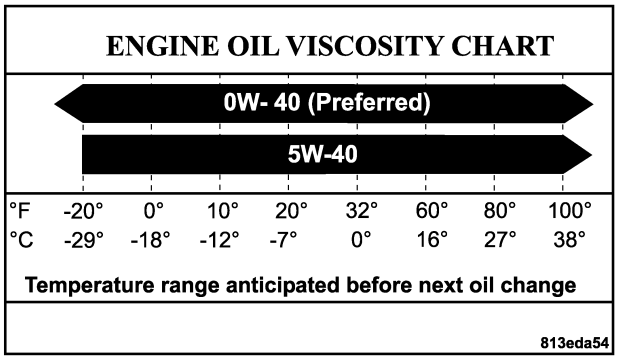

Materials Added to Engine Oil

The manufacture strongly recommends against the addition of any additives (other than leak detection dyes) to the engine oil. Engine oil is an engineered product and it's performance may be impaired by supplemental additives.

Disposing of Used Engine Oil

Care should be taken in disposing of used engine oil from your vehicle. Used oil, indiscriminately discarded, can present a problem to the environment. Contact your dealer, service station, or governmental agency for advice on how and where used oil can be safely discarded in your area.

Engine Oil Filter

The engine oil filter should be replaced with a new filter at every engine oil change.

Engine Oil Filter Selection

All manufacturer's engines have a full-flow type disposable oil filter. Use a filter of this type for replacement. The quality of replacement filters varies considerably. Only high quality filters should be used to assure most efficient service. Mopar® engine oil filters are high quality oil filters and are recommended.

Drive Belts — Check Condition and Tension

At the mileage shown in the appropriate "Maintenance Schedule", check the condition of the drive belt for condition and proper tension. Improper belt tension can cause belt slippage and failure.

Inspect the drive belt for evidence of cuts, cracks, or glazing and replace it if there is any sign of damage which could result in belt failure.

Spark Plugs

Spark plugs must fire properly to assure proper engine performance and emission control. Install new recommended plugs with the recommended gap at the specified mileage.

Refer to the "Vehicle Emission Control Information" label in the engine compartment for spark plug information.

Catalytic Converter

The catalytic converter requires the use of unleaded fuel only. Leaded gasoline will destroy the effectiveness of the catalyst as an emission control device.

Under normal operating conditions, the catalytic converter will not require maintenance. However, it is important to keep the engine properly tuned to assure proper catalyst operation and prevent possible catalyst damage.

CAUTION!

Damage to the catalytic converter can result if your vehicle is not kept in proper operating condition. In the event of engine malfunction, particularly involving engine misfire or other apparent loss of performance, have your vehicle serviced promptly. Continued operation of your vehicle with a severe malfunction could cause the converter to overheat, resulting in possible damage to the converter and the vehicle.

WARNING!

A hot exhaust system can start a fire if you park over materials that can burn. Such materials might be grass or leaves coming into contact with your exhaust system. Do not park or operate your vehicle in areas where your exhaust system can contact anything that can burn.

In unusual situations involving grossly malfunctioning engine operation, a scorching odor may suggest severe and abnormal catalyst overheating. If this occurs, stop the vehicle, turn off the engine and allow it to cool. Service, including a tune up to manufacturers specifications, should be obtained immediately.

To minimize the possibility of catalytic converter damage:

- Do not shut off the engine or interrupt the ignition when the transmission is in gear and the vehicle is in motion.
- Do not try to start the engine by pushing or towing the vehicle.
- Do not idle the engine with any spark plug wires disconnected for prolonged period.

Ignition Wiring System and Ignition Timing

The ignition cables should be kept clean and properly connected. Terminals should be fully seated. Do not remove the nipple assemblies from the coil towers unless the nipples are damaged or cable testing shows high resistance or broken insulation. Refer to the Service Manual for the proper procedure to be followed for checking ignition cable resistance. Cracked, damaged, or faulty cables should be replaced.

Because of the plastic body shell on your Viper, ignition cables should be replaced with the specially designed RFI cables available at your dealer.

Ignition timing cannot be set on this vehicle.

Crankcase Emission Control System

Proper operation of this system depends on freedom from plugging due to deposits. As vehicle mileage builds up, the Crankcase Ventilation Valve orifice may accumulate deposits. If a valve is not working properly, replace it with a new orifice. DO NOT ATTEMPT TO CLEAN THE OLD ORIFICE!

Check the ventilation hose for indication of damage or plugging deposits. Replace if necessary.

Air Cleaner Filter

Under normal driving conditions, replace the air filter at the intervals shown on "Maintenance Schedule A". If, however, you drive the vehicle frequently under dusty or severe conditions, the filter element should be inspected periodically and replaced if necessary at the intervals shown in "Maintenance Schedule B".

WARNING!

The air cleaner can provide protection if the engine backfires. Do not remove the air cleaner unless such removal is necessary for repair or maintenance. Make sure that no one is near the engine compartment before starting the vehicle with the air cleaner removed. Failure to do so can result in serious personal injury.

Maintenance-Free Battery

The top of the MAINTENANCE-FREE battery is permanently sealed. You will never have to add water, nor is periodic maintenance required.

The battery is in a compartment inside the trunk on the left side.

NOTE: Remove the floor portion of the trunk carpet to gain access to the battery.

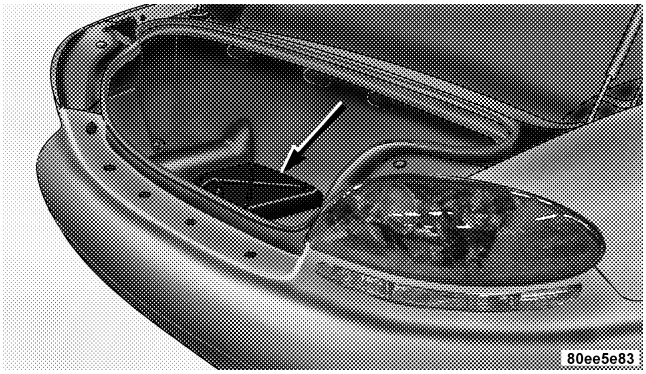

Battery Location

To service the battery:

1. Locate the battery compartment inside the trunk.

2. Remove the battery cover mounting screws and remove the battery cover.

3. Remove the negative battery cable post and then remove the positive battery cable post connection.

4. Remove or loosen the battery retainer clamp and bolt.

5. Lift out the battery.

6. Clean out the battery tray area, freeing area of dirt, stones and battery acid.

7. Clean and inspect the battery terminals and replace if parts are damaged or unusable.

8. Place the battery in the tray.

9. Tighten the battery retainer clamp and bolt down.

10. Tighten the positive battery post and then tighten the negative battery post.

11. Install the battery cover and tighten down the screws.

WARNING!

Battery fluid is a corrosive acid solution and can burn or even blind you. Don't allow battery fluid to contact your eyes, skin or clothing. Don't lean over a battery when attaching clamps. If acid splashes in eyes or on skin, flush the area immediately with large amounts of water. Battery gas is flammable and explosive. Keep flame or sparks away from the battery. Don't use a booster battery or any other booster source with an output greater than 12 volts. Don't allow cable clamps to touch each other.

WARNING!

Battery posts, terminals and related accessories contain lead and lead compounds. Wash hands after handling.

CAUTION!

It is essential when replacing the cables on the battery that you attach the positive cable to the positive post and the negative cable to the negative post. Battery posts are marked positive (+) and negative (-) and identified on the battery case. Cable clamps should be tight on the terminal posts and free of corrosion. Apply grease to post and clamps after tightening. If using a "fast charger" while the battery is in the vehicle, disconnect both vehicle battery cables before connecting the charger to battery. Do not use a "fast charger" to provide starting voltage.

Battery Save Feature

The Battery Save feature conserves battery power when storing the vehicle up to 3 months without losing radio and engine controller memory. This is an alternative to disconnecting the battery.

NOTE: This vehicle is designed to sit in storage for up to 30 days on a fully charged battery. If this vehicle is to be stored for longer than 30 days the following is recommended:

1. Disconnect the battery
2. Use the battery charger
3. Put the vehicle into Battery Save mode (3 month charge).

Start the battery save feature by doing the following:

1. Insert the key into the ignition.

2. Cycle the ignition from OFF to ACC four times without going into ON. Leave the switch in the OFF position after the fourth cycle.

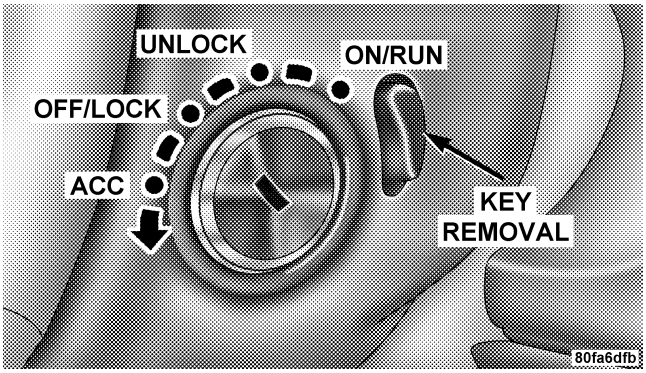

Ignition Key Positions

3. Depress the driver's side Power Door Lock switch in the UP direction. A single chime and a horn chirp indicate that the process has begun.

4. Remove the key from the ignition and exit the vehicle.

5. The feature is cancelled when the ignition is cycled to ON/RUN.

6. The vehicle will enter Battery Save Mode 45 seconds after all doors are closed.

NOTE: The remote keyless entry and passenger exterior door handle will not work when the Battery Save feature is enabled. Enter the vehicle either by using the key to open the door manually or by using the outside door handle.

NOTE: The Vehicle Theft Alarm is disabled when the vehicle is in Battery Save mode. Therefore, the vehicle is not protected when the Battery Save feature is enabled.

NOTE: The exterior and interior lighting functions will not work when the vehicle is in Battery Save Mode.

Exit Battery Save Mode by doing the following:

1. Press the driver's door exterior handle to wake up the vehicle.

2. If the door does not open (vehicle is armed) press the remote keyless entry unlock button to unlock the vehicle.

3. Press the driver's door exterior handle again to open the door.

4. Cycle the Ignition to ON/RUN. If the ignition is NOT cycled to ON/RUN, then the vehicle will re-enter Battery Save Mode 45 seconds after the driver's door is closed.

Air Conditioner

Check the air conditioning system operation at the start of the warm weather season.

NOTE: If air conditioning operation seems to be lower than expected, check the front of the A/C condenser, located in front of the radiator for dirt or insect accumulation. Clean with a gentle water spray as required. Front end fascia protectors may reduce air flow to the condenser and radiator, reducing A/C and engine cooling performance.

WARNING!

- **Use only refrigerants and compressor lubricants approved by the manufacturer for your air conditioning system. Some unapproved refrigerants are flammable and can explode, injuring you. Other unapproved refrigerants or lubricants can cause the system to fail, requiring costly repairs. Refer to Section 3 of the Warranty Information book for further warranty information.**
- **The air conditioning system contains refrigerant under high pressure. To avoid risk of personal injury or damage to the system, adding refrigerant or any repair requiring lines to be disconnected should be done by an experienced repairman.**

Refrigerant Recovery and Recycling

R-134a Air Conditioning Refrigerant is a hydrofluorocarbon (HFC) that is endorsed by the Environmental Protection Agency and is an ozone-saving product. However, the manufacturer recommends that air conditioning service be performed by dealers or other service facilities using recovery and recycling equipment.

NOTE: Use only manufacturer approved A/C System Sealers, Stop Leak Products, Seal Conditioners, Compressor Oil, or Refrigerants.

Power Steering (Pump and Reservoir)

WARNING!

Fluid level should be checked with the engine off to prevent injury from moving parts. Do not overfill. Use only the manufacturer's recommended fluid. Refer to Recommended Fluids, Lubricants and Genuine Parts for correct fluid type.

Check power steering fluid level at intervals as specified in the maintenance schedules.

During scheduled maintenance, check the power steering fluid level at the power steering fluid reservoir.

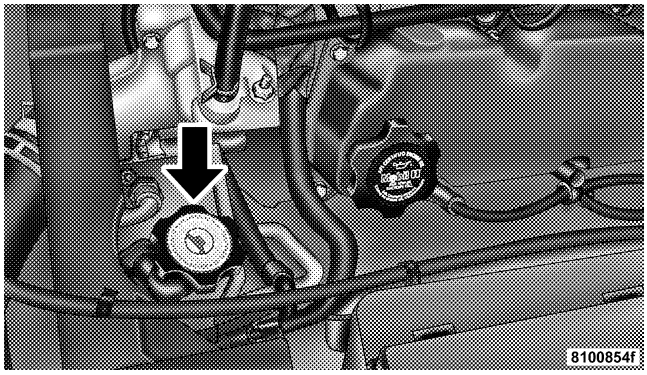

Power Steering Fluid Reservoir

The fluid should be checked HOT with the engine OFF.

Before removing the reservoir cap, wipe the outside of the cap and reservoir so that no dirt can fall into the reservoir.

All power steering pumps have a dipstick. Fluid level should be maintained at the proper level indicated on the dipstick. If necessary, add fluid to restore to the proper indicated level. With a clean cloth, wipe any spilled fluid from all surfaces. Only petroleum fluids specially formulated for minimum effect on the rubber hoses should be used. Use only the manufacturer's recommended fluid. Refer to Recommended Fluids, Lubricants and Genuine Parts for the correct fluid type.

Body Lubrication

Locks and all body pivot points, including such items as seat tracks, doors, liftgate and hood hinges, should be lubricated periodically to assure quiet, easy operation and to protect against rust and wear. Prior to the application of any lubricant, the parts concerned should be wiped clean to remove dust and grit; after lubricating excess oil and grease should be removed. Particular attention should also be given to hood latching components to insure proper function. When performing other underhood services, the hood latch, release mechanism and safety catch should be cleaned and lubricated.

The external lock cylinders should be lubricated twice a year, preferably in the fall and spring. Apply a small amount of a high quality lubricant such as Mopar® Lock Cylinder Lubricant directly into the lock cylinder.

Front and Rear Suspension Ball Joints

Your vehicle has suspension ball joints that require periodic servicing. These ball joints should be inspected whenever servicing a vehicle for other reasons.

Damaged seals should be replaced to prevent leakage or contamination of the grease. If there is any movement within the ball joint, the knuckle or control arm must be replaced. The ball joints are not serviceable by themselves.

Relubrication

Ball joints are lubricated at the factory with a special grease. They should be regreased at intervals as specified in the maintenance schedules. When lubricating ball joints, use only special long life chassis grease, such as Multi-Mileage Lubricant, intended for this purpose.

Steering Linkage

There are two tie rod end ball joints that require periodic inspection. The ball joint seals should be inspected whenever servicing the vehicle for other reasons. Damaged seals should be replaced to prevent leakage or contamination of the grease. The seals are not serviceable by themselves, the entire outer tie rod end needs to be replaced.

Lubrication

The tie rod ends are lubricated for life. No periodic lubrication is required.

Body Mechanism Lubrication

Body and other operating mechanisms and linkages should be inspected, cleaned, and lubricated, as required, to maintain ease of operation and to provide protection against rust and wear.

Before the application of any lubricant, the parts concerned should be wiped clean to remove dust and grit; after lubricating, excess oil or grease should be removed.

Hood Latch

When performing other underhood services, the hood latch release mechanism and safety catch should be inspected, cleaned, and lubricated.

It is important to maintain proper lubrication to insure that the hood mechanisms work properly and safely. Multi-Purpose Lubricant, NLGI Grade 2, should be applied sparingly to all pivot and sliding contact areas.

Other Body Mechanisms

The following body mechanisms should be inspected and, if necessary, all pivot and sliding contact areas of these components should be lubricated with the lubricant specified as follows:

Smooth White Body Lubricant - Such as Mopar Spray White Lube:

- Hood hinge
- D/ lid hinge
- Fuel door hinge
- Lock cylinders
- Parking brake mechanism
- Trunk latches
- Ash tray

Points That Should Not Be Lubricated

There are many points that should not be lubricated; some because they are permanently lubricated, some because lubricants will be detrimental to the operating characteristics, and some because lubricants will cause component failures.

In particular, do not lubricate rubber bushings, since this not only will cause them to fail, but will destroy their necessary frictional characteristics.

Parts that should not be lubricated are as follows:

- Generator bearings
- Drive belt
- Accessory drive belt idler pulley
- Idler arm assembly
- Front wheel bearing

- Rubber bushings
- Starter bearing
- Throttle control cable
- Water pump bearings

Windshield Washers

The fluid reservoir in the right side engine compartment should be checked for fluid level at regular intervals. Fill the reservoir with windshield antifreeze (not radiator antifreeze).

Exhaust System

The best protection against carbon monoxide entry into the vehicle body is a properly maintained engine exhaust system.

If you notice a change in the sound of the exhaust system; or if exhaust fumes can be detected inside the vehicle; or when the underside or side of the vehicle is damaged; have a competent mechanic inspect the complete exhaust system and adjacent body areas for broken, damaged, deteriorated, or mispositioned parts. Open seams or loose connections could permit exhaust fumes to seep into the passenger compartment. In addition, inspect the exhaust system each time the vehicle is raised for lubrication or oil change. Replace as required.

WARNING!

Exhaust gases can injure or kill. They contain carbon monoxide which is colorless and odorless. Breathing it can make you unconscious and can eventually poison you.

Cooling System

Inspection

WARNING!

You or others can be badly burned by hot coolant or steam from your radiator. If you see or hear steam coming from under the hood, don't open the hood until the radiator has had time to cool. Never try to open a cooling system pressure cap when the radiator is hot.

Coolant Checks

Check engine coolant (antifreeze) protection every 12 months (before the onset of freezing weather, where applicable). If coolant is dirty or rusty in appearance, the system should be drained, flushed and refilled with fresh coolant. Check the front of the radiator for any accumulation of bugs, leaves, etc.

Check the coolant bottle tubing for condition and tightness of connection at reserve tank and radiator. Inspect the entire system for leaks.

NOTE: Check the front of the radiator for debris (leaves, paper, etc.) regularly. A build up of such material could lead to engine overheating.

Do not remove the cooling system pressure cap when the cooling system is hot.

Cooling System — Drain, Flush and Refill
The cooling system should be drained, flushed and refilled at the intervals shown on the Maintenance Schedules.

If the solution is dirty and contains a considerable amount of sediment, clean and flush with a reliable cooling system cleaner. Follow with a thorough rinsing to remove all deposits and chemicals. Discard old antifreeze solution according to recommended procedure.

Selection Of Coolant
Use only the manufacturer's recommended coolant. Refer to the Recommended Fluids, Lubricants and Genuine Parts section for the correct coolant type.

CAUTION!

- **Mixing of coolants other than specified engine coolant, may result in engine damage, and decrease corrosion protection. If a non-HOAT coolant is introduced into the cooling system in an emergency, it should be replaced with the specified coolant as soon as possible.**
- **Do not use plain water alone or alcohol base antifreeze products. Do not use additional rust inhibitors or antirust products, as they may not be compatible with the radiator coolant and may plug the radiator.**
- **This vehicle has not been designed for use with Propylene Glycol based coolants. Use of Propylene Glycol based coolants is not recommended.**

Adding Coolant

When adding coolant, or refilling the system, a minimum solution of 50% recommended HOAT ethylene glycol engine coolant (antifreeze) and distilled water should be used. Use higher concentrations (not to exceed 70%) if temperatures below −34°F (−37°C) are anticipated.

Use only high purity water such as distilled or deionized water when mixing the water / antifreeze solution. The use of lower quality water will reduce the amount of corrosion protection in the engine cooling system.

NOTE: It is the owner's responsibility to maintain the proper level of protection against freezing according to the temperatures occurring in the area where the vehicle is operated.

WARNING!

Never add coolant to the radiator when the engine is overheated. Do not loosen or remove pressure cap to cool overheated engine. The coolant is under pressure and severe scalding could result.

Cooling System Pressure Cap

The cap must be fully tightened to prevent loss of coolant, and to insure that coolant will return to the radiator from the coolant reserve tank.

The pressure cap should be inspected and cleaned if there is any accumulation of foreign material on the sealing surfaces.

WARNING!

- **The warning words "DO NOT OPEN HOT" on the pressure cap are a safety precaution. Never add coolant to the radiator when the engine is overheated. Do not loosen or remove the pressure cap to cool overheated engine. Heat causes pressure to build up in the cooling system. To prevent scalding or injury, do not remove the pressure cap while the system is hot or under pressure.**
- **Do not use a pressure cap other than the one specified for your vehicle. Personal injury or engine damage may result.**

Disposal of Used Engine Coolant

Used ethylene glycol based engine coolant is a regulated substance requiring proper disposal. Check with your local authorities to determine the disposal rules for your community. To prevent ingestion by animals or children do not store ethylene glycol based engine coolant in open containers or allow it to remain in puddles on the ground. If ingested by a child, contact a physician immediately. Clean up any ground spills immediately.

Coolant Level

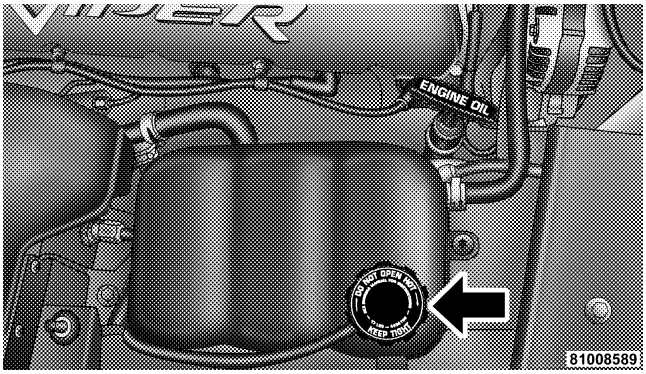

Coolant Recovery Bottle

The coolant recovery bottle provides a visual method for checking the coolant level without removing the pressure cap.

With the engine warmed up, the coolant level should be between MIN and MAX on the coolant recovery bottle.

When additional coolant is needed to maintain the proper level, it should be added to the coolant recovery bottle.

Points to Remember

- Do not overfill the bottle.
- Check coolant freeze point in the coolant bottle. If antifreeze needs to be added, contents of the coolant bottle also must be protected against freezing.
- If frequent coolant additions are required, or if the level in the bottle does not drop when the engine cools, the cooling system should be pressure tested for leaks.
- Maintain coolant concentration at 50% HOAT ethylene glycol engine coolant (minimum) and distilled water for proper corrosion protection of your engine which contains aluminum components.

- Make sure that the radiator and bottle overflow hoses are not kinked or obstructed.
- Keep the front of the radiator clean. If your vehicle has air conditioning, keep the front of the condenser clean also.
- Do not change the thermostat for summer or winter operation. If replacement is ever necessary, install ONLY the correct type thermostat. Other designs may result in unsatisfactory cooling performance.

Hoses and Vacuum/Vapor Harnesses

Inspect surfaces of hoses and nylon tubing for evidence of heat and mechanical damage. Hard or soft spots, brittle rubber, cracking, checking, tears, cuts, abrasions, and excessive swelling suggest deterioration of the rubber. Pay particular attention to those hoses nearest to high heat sources such as the exhaust manifold. Inspect hose routing to be sure hoses do not touch any heat source or moving component that may cause heat damage or mechanical wear.

Insure nylon tubing in these areas has not melted or collapsed.

Inspect all hose connections such as clamps and couplings to make sure they are secure and no leaks are present.

Components should be replaced immediately if there is any evidence of degradation that could result in failure.

Brake System

To assure brake system performance, all brake system components should be inspected periodically. Suggested service intervals can be found in Section 8 of this manual.

WARNING!

Riding the brakes can lead to brake failure and possibly an accident. Driving with your foot resting or riding on the brake pedal can result in abnormally high brake temperatures, excessive lining wear, and possible brake damage. You wouldn't have your full braking capacity in an emergency.

Brake, Power Steering, and Fuel System Hoses

When servicing the vehicle for scheduled maintenance, inspect surface of hoses and nylon tubing for evidence of heat and mechanical damage. Hard and brittle rubber, cracking, checking, tears, cuts, abrasion, and excessive swelling suggest deterioration of the rubber. Particular attention should be made to examining those hose surfaces nearest to high heat sources, such as the exhaust manifold.

Inspect all hose clamps and couplings to make sure they are secure and no leaks are present.

Insure nylon tubing in these areas has not melted or collapsed.

NOTE: Often, fluids are used during assembly plant operations to ease the assembly of hoses to couplings. Therefore, oil wetness at the hose-coupling area is not necessarily an indication of leakage. Actual dripping of hot fluid when systems are under pressure (during vehicle operation) should be noted before hose is replaced based on leakage.

High pressure fuel system hoses have unique material characteristics that provide adequate sealing and resist attack by deteriorated gasoline.

Use only manufacturer specified hoses or their equivalent in material and specification, in any fuel system

servicing. It is mandatory to replace all clamps that have been loosened or removed during service.

NOTE: Inspection of brake hoses should be done whenever the brake system is serviced and at every engine oil change. If there is any evidence of cracking, scuffing, or worn spots, the hose should be replaced immediately! Eventual deterioration of the hose can take place with possible burst failure.

Brake and Clutch Fluid

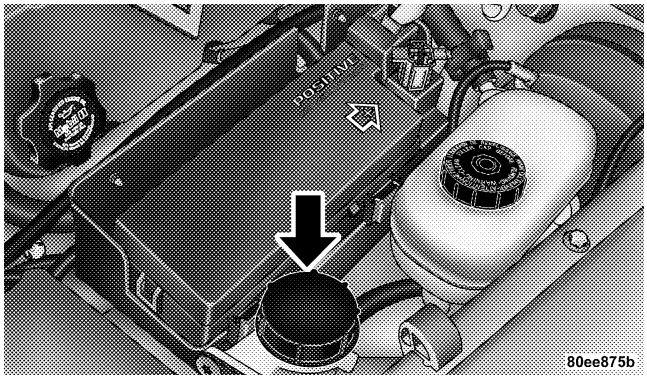

Clutch Fluid Reservoir

These fluids will tend to absorb moisture from the atmosphere over a period of time. If the fluid becomes contaminated with water, brake or clutch performance will deteriorate. The brake and clutch fluid must be changed every two years.

CAUTION!
Brake fluid can damage the finish of your Viper. Do not allow brake fluid to contact any painted surface.

WARNING!
Overfilling the brake fluid reservoir can result in spilling brake fluid on hot engine parts and the brake fluid catching fire.

Master Cylinder

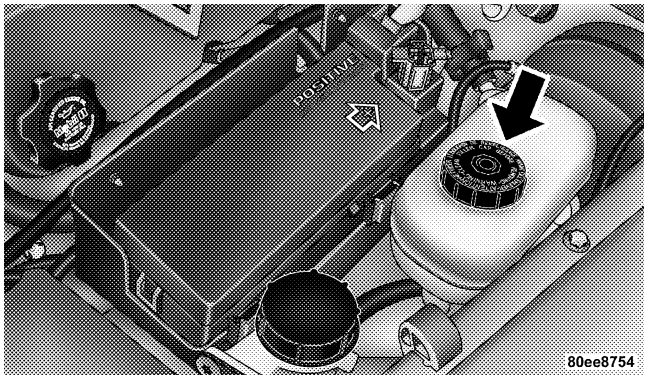

Brake Fluid Reservoir

The fluid level in the master cylinder should be checked when performing underhood services, or immediately if the brake system warning lamp shows system failure. Be sure to clean the top of the master cylinder area before removing the cap. If necessary, add fluid to bring the

fluid level up to the requirements described on the brake fluid reservoir. With disc brakes, fluid level can be expected to fall as the brake pads wear. However, low fluid level may be caused by a leak and a checkup may be needed. Use only the manufacturer's recommended brake fluid. Refer to the Recommended Fluids, Lubricants and Genuine Parts section for the correct fluid type. Mopar Brake Fluid is fluid of this quality and is recommended to provide best brake performance. Use of a brake fluid that may have a lower initial boiling point or unidentified as to specification, may result in sudden brake failure during hard prolonged braking.

Use only brake fluid that has been in a tightly closed container to avoid contamination from foreign matter.

Hydraulic Clutch

The fluid in the clutch master cylinder should be checked when performing other under hood services. To check the fluid level, remove the reservoir cap. If necessary, add fluid to the reservoir. Use only the manufacturer's recommended brake fluid. Refer to the Recommended Fluids, Lubricants and Genuine Parts section for the correct fluid type. Mopar brake fluid is fluid of this quality and is recommended to provide best brake performance. Make sure that the fluid has been stored in a tightly closed container to avoid contamination with dirt or moisture. Do Not Overfill. Overfilling can cause clutch release problems as the clutch wears. A low fluid level may indicate a leak, in which case, hydraulic clutch linkage replacement may be required. The fluid level in the reservoir will rise as the clutch wears - Do Not Remove Fluid.

Do not allow petroleum base fluid to contaminate the brake fluid — seal damage will result.

Transmission

Lubricant Selection

Refer to the Recommended Fluids, Lubricants and Genuine Parts section for correct fluid type.

CAUTION!

Using a transmission fluid other than the manufacturer's recommended fluid may cause deterioration in transmission shift quality. Refer to the Recommended Fluids, Lubricants and Genuine Parts section for correct fluid type.

Fluid Level Check

The fluid in the transmission should be checked whenever other underhood services are done. Check the fluid level by removing the fill plug located on the left side of the transmission. The fluid level should be at the bottom of the fill hole. Add fluid, if necessary, to maintain the proper level.

Frequency of Fluid Change

Under normal operating conditions, the fluid installed at the factory will give satisfactory lubrication for the life of the vehicle. If the vehicle is operated under severe conditions, change the fluid as specified in Maintenance Schedule **B**. If contaminated with water, the fluid should be changed immediately.

Rear Axle

Fluid Level Check

Every 12 months or 6,000 miles (10 000 km) the exterior of the axle should be checked for evidence of gear oil leakage. This check should be made with the vehicle in a level position, supported by the suspension, on an axle and wheel type hoist, or on the ground. The axle fluid

level should be between the bottom of the filler plug and a point approximately 3/8 inch (9.5mm) below the filler plug.

Lubricant Selection

Use only the manufacturer's recommended transmission fluid. Refer to the Recommended Fluids, Lubricants and Genuine Parts section for correct fluid type. This Limited Slip Differential requires that a friction control additive be added to the gear oil whenever a fluid change is made.

Frequency of Oil Change

Drain and fill the axle at the interval specified in the Maintenance Schedules. Change the fluid immediately if contaminated with water.

Wheel Bearings

Your Viper has permanently sealed wheel bearings that do not require periodic maintenance.

Appearance Care

Your manufacturer's dealer offers a complete line of products for cleaning your Viper. Follow the instructions on each container.

Leather or Vinyl Seat/Trim Care and Cleaning

Leather is best preserved by regular cleaning with a damp soft cloth. Small particles of dirt can act as an abrasive and damage the leather surface and should be removed immediately with a damp cloth. Stubborn soils can be removed easily with a soft cloth and Mopar Total Clean. Care should be taken to avoid soaking the leather with any liquid. Please do not use polishes, oils, cleaning fluids, solvents, detergents, or ammonia based cleaners to clean the leather. Application of a leather conditioner is not required to maintain the original condition.

Paint and Trim
Your vehicle is exposed to the corrosive effects of chemical fall out, salt spray, and road film. To protect not only the paint and trim, but also exposed mountings and fixtures, it is important you wash it often and thoroughly.

After washing, allow all surfaces to drain and dry before parking in a closed garage. Prompt washing may not thoroughly remove these deposits. Additional cleaners may be required. When using chemical cleaners formulated for this purpose, be certain they are safe for use on urethane painted surfaces.

Use soap and water on dull black window trim. Polish or cleaners may leave a white residue. If desired, you may polish your vehicle immediately by using Mopar Automobile Polish.

Glass Surfaces
All glass surfaces should be cleaned regularly with any commercial household-type glass cleaner. Never use an abrasive type cleaner.

Cleaning Plastic Instrument Cluster Lenses
When cleaning the lenses, use care to avoid scratching the plastic.

NOTE: Never scrape the windows with squeegees, razor blades, or other sharp instruments.

- Clean with a wet soft rag. A mild soap solution may be used, but do not use high alcohol content or abrasive cleaners. If using soap, wipe clean with a clean damp rag or chamois cloth.
- Dry with a soft tissue.

Damage to the Body Finish
Any stone chips, fractures or deep scratches in the finish should be promptly repaired.

Minor damage can be repaired by using touch-up materials available at your dealers. More extensive damage should be corrected in your dealer's paint facility.

Seat Belt Maintenance
Do not bleach, dye or clean the belts with chemical solvents or abrasive cleaners. This will weaken the fabric. Sun damage will also weaken the fabric.

If the belts need cleaning, use a mild soap solution or lukewarm water. Do not remove the belts from the car to wash them.

Replace the belts if they appear frayed or worn or if the buckles do not work properly.

Convertible Top Care
Use a mild detergent to clean the top. Avoid heavy scrubbing and rinse with plenty of clean water. Allow to dry thoroughly before storage.

Carpeting
Vacuum your carpeting regularly to prevent a soil buildup. Shampoo soiled carpeting with a reliable upholstery cleaner, using a natural sponge or soft bristle brush. After carpeting dries, vacuum it thoroughly.

Underbody Maintenance
The corrosive materials used for ice and snow removal or dust control may accumulate on the underbody of your vehicle. If not removed, these materials may accelerate rusting and deterioration of underbody components such as fuel lines, frame, floor pan, exhaust system, etc.

At least twice during the winter months hose down the wheel wells and underside of the vehicle. Make sure you remove mud and salt from panels, crevices and ledges, and that all drain holes and channels are free of debris.

NOTE: You can do more harm by hosing off the vehicle without removing caked mud and debris.

The frame of your Viper is galvanized for rust-through protection. It is also dipped in a black E-Coat to protect the welded areas. Avoid any scratches through to bare metal.

Commercial Car Washes

We do not recommend that you take your Viper through a commercial car wash.

In the event that you do take your Viper to a commercial car wash, move the Heater/Air Conditioning blower control to the lowest setting. This will prevent the possibility of water entering the system.

CAUTION!

The tires on your Viper are wider than the guide tracks on most washes and the low ground clearance of your vehicle may not be compatible with some car wash equipment. You could damage your vehicle.

FUSES — Power Distribution Center

A power distribution center is located in the engine compartment. This center contains fuses and relays.

CAUTION!

- **When installing the Power Distribution Center cover, it is important to ensure the cover is properly positioned and fully latched. Failure to do so may allow water to get into the Power Distribution Center, and possibly result in a electrical system failure.**
- **When replacing a blown fuse, it is important to use only a fuse having the correct amperage rating. The use of a fuse with a rating other than indicated may result in a dangerous electrical system overload. If a properly rated fuse continues to blow, it indicates a problem in the circuit that must be corrected.**

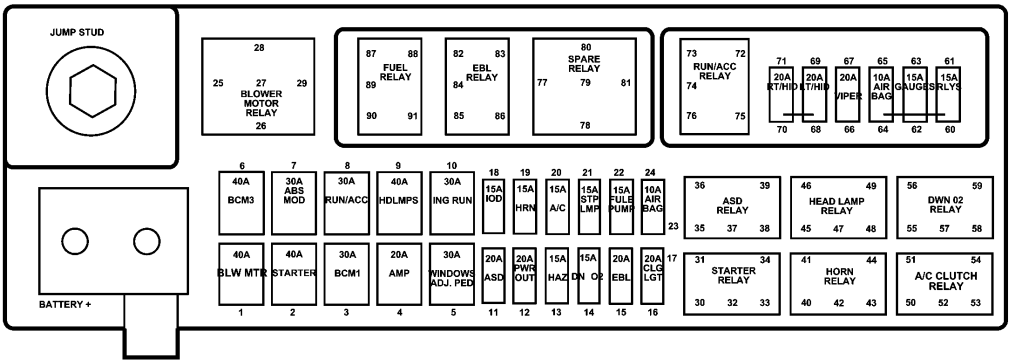

80f5ff93

Power Distribution Center

Power Distribution Center

Cavity	Fuse	Circuits
1	Cartridge Fuse 40 Amp	Batt-Relay Contact, High Blower Motor Module-ABS Pump Feed
2	Cartridge Fuse 40 Amp	ABS Pump Feed
3	Cartridge Fuse 30 Amp Green	Battery
4	Cartridge Fuse 20 Amp Yel-low	Fused Feed to RS Amplifier or Power Amplifier
5	Cartridge Fuse 30 Amp Green	Ignition Switch (Run & Accessory)-(Downstream)
6	Cartridge Fuse 40 Amp	Batt
7	Cartridge Fuse 30 Amp Green	Batt-Relay Contact, ABS Pump Motor
8	Cartridge Fuse 30 Amp Green	Batt-Motor, Wiper
9	Cartridge Fuse 40 Amp	Batt-Fuseblock

Cavity	Fuse	Circuits
10	Cartridge Fuse 30 Amp Green	Batt-Switch, Ignition (Run/Start/Accy)
11	Mini Fuse 20 Amp Yellow	Batt-Relay Contact, Auto Shut-down
12	Mini Fuse 20 Amp Yellow	Secondary Power Outlet Feed
13	Mini Fuse 15 Amp Blue	Batt-Flasher, Hazard
14	Mini Fuse 15 Amp Blue	Rear 02 Sensor to Heater Relay
15	Mini Fuse 20 Amp Yellow	Electric Heated RR. WDO (EBL)
16, 17	Mini Fuse 20 Amp Yellow	Fused Feed-Cigar Lighter
18	Mini Fuse 15 Amp Blue	Batt-Locks, Power Door
19	Mini Fuse 15 Amp Blue	Batt
20	Mini Fuse 15 Amp Blue	Feed-Courtesy, Dome, Visor, Illu-minated Entry, Reading
21	Mini Fuse 15 Amp Blue	Fuse Feed to Stop Lamp Switch

Cavity	Fuse	Circuits
22	Mini Fuse 15 Amp Blue	Battery to AC Clutch Relay
23, 24	Mini Fuse 10 Amp Red	Airbag, Ignition Run
25-29	ISO RE-LAY	Batt-Relay Contact, High Blower Motor
30-34	MICRO RELAY	Batt-Relay-Starter Contact to Solenoid
35-39	MICRO RELAY	Feed-Auto Shutdown Relay Coil
40-44	MICRO RELAY	Feed-Horn (From Relay)
45-49	MICRO RELAY	Batt-Relay-Headlamps
50-54	MICRO RELAY	Relay-A/C Clutch Output from Relay Contact (B+)

Cavity	Fuse	Circuits
55-59	MICRO RELAY	Left/Right Downstream Oxygen Sensor Output Feed FR
60, 61	Mini Fuse 15 Amp Blue	Ignition Start/Run Relay Coil
62, 63	Mini Fuse 15 Amp Blue	Ignition Start/Run Gauges
64, 65	Mini Fuse 10 Amp Red	Ignition Start/Run Airbag
66, 67	Mini Fuse 20 Amp Yellow	Feed-Ign Run/Acc Wiper Switch
68, 69	Mini Fuse 20 Amp Yellow	Left HID Headlamp

Cavity	Fuse	Circuits
70, 71	Mini Fuse 20 Amp Yellow	Right HID Headlamp
72-76	MICRO RELAY	Batt-Run/Acc Relay
82-86	MICRO RELAY	Heated Rear Window (EBL) Relay
87-91	MICRO RELAY	Batt-Motor, Fuel Pump Relay

VEHICLE STORAGE

We recommend that you follow these guidelines before storing your vehicle for extended periods.

- Fill the fuel tank. This will prevent water condensation inside the gas tank.

  If you plan on storing your vehicle more than 2 months, add an anti-oxidant fuel stabilizer to the fuel tank.
- Change the oil to remove any corrosive combustion related acids in the crankcase.
- Wash and wax the vehicle to protect the finish.
- Cover the vehicle whenever possible to prevent accidental damage to the finish.
- Store the vehicle in a dry, well ventilated location.
- If the vehicle will be subjected to freezing temperatures, remove the battery and store it in a dry, well ventilated area or place a trickle charger (1.5 Amp) with automatic shutdown / overcharge protection connected to the battery. Do not leave the trickle charger hooked up to the battery without being plugged into the 110 AC voltage outlet, because this will result in further drain on the vehicle's battery. If

the vehicle is not going to be driven in the next 3 weeks, follow the battery recharge procedure in the Service Manual, then disconnect the battery at the negative terminal or use the save feature described in Maintaining your Vehicle section under the Maintenance Procedures sub-section, within Maintenance-Free Battery.

CAUTION!

Use care when disconnecting the remote positive cable. It is connected to the battery and can short out to any metal on the vehicle. Always tape or wrap the exposed cable end to prevent electrical shorts.

- Disconnecting the battery causes the engine control system to lose memory of some "learned" functions, unless using the Battery Save feature described in Maintaining your Vehicle section under the Maintenance Procedures sub-section, within Maintenance-Free Battery. The engine may run rough when first started after a battery disconnect until the control module "relearns" these functions.

  Check the battery every 4 to 6 weeks to ensure that the voltage is above 12.40. Voltage will drop more rapidly in hot temperatures. If battery voltage drops below 12.40, follow the battery recharge procedure in the Service Manual.

- Check that the radiator coolant level of protection is to at least -20°F (-29°C).
- Block the wheels. Do not apply the Parking Brake.
- Make sure that all tires are inflated to the optimum pressure, (29 PSI).

- Cut blocks of plywood about the same size of the tires. Cover each block with indoor/outdoor carpeting and place them between the tires and concrete. This will prevent tire flat spotting.
- For long term storage, remove the tires and put the vehicle up on blocks. Stack the tires on plywood and cover with a tarp to prevent flat spotting.
- Move the wiper blades away from the windshield.

NOTE: To help prevent the battery from discharging during shorter periods of inactivity, perform the following:

1. Make sure that the trunk, hood, doors, windows and convertible top are completely closed.

2. Make sure that remote transmitter is operating and that the battery is good.

3. Make sure that the hood, trunk and door switches are in adjustment. Perform the quick system check which follows.

Use the remote transmitter to set the alarm. If the alarm SET light comes on and flashes, the system is operating properly. If not, there is a problem with a switch or the system. See your dealer for service.

REPLACEMENT BULBS

Interior Light Bulbs

Message Center Indicators 103
Cluster 103
Gauge Pack 103
Heater Control 37
Interior Light 212–2
Courtesy Footwell Lights 194

Exterior Light Bulbs

Headlight-Low/High Beam . . . . Serviced at dealer only
Aux. Headlight-High Beam . . . . . (HB3A) 9005XS
Front Park/Turn 3157AK
Fog Light . . . . . (H10 U) 9145
Front Sidemarker 2886X
Center Stop Light . . . . . 16 LED (not serviceable)
Rear Tail/Stop 3157
Rear Tail Light 194
Rear Marker Light 194
Back up Light 3157
Rear Turn Light 3457AK
License 168

NOTE: You will note that upon turning the (HID) High Intensity Discharge Headlamp Bulbs on, there is a blue hue to the lamps. This diminishes and becomes more white after approximately 10 seconds as the system charges.

EXTERIOR LIGHT BULB SERVICE

Headlight, Parking, Front Park, Turn Signal, Front Sidemarker and Front Fog Light Removal

1. Remove the splash shield.

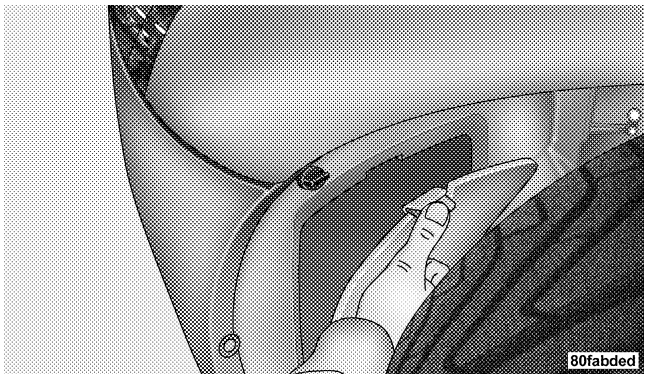

2. Twist off sockets counter-clockwise and pull out bulbs from the socket, install the new bulbs, and reinstall the bulb and socket assembly. Replace the splash shield.

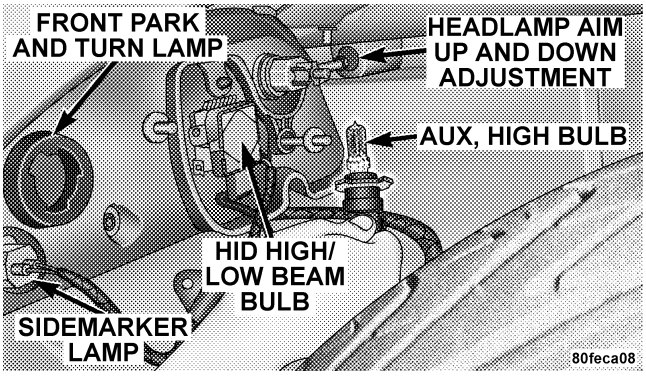

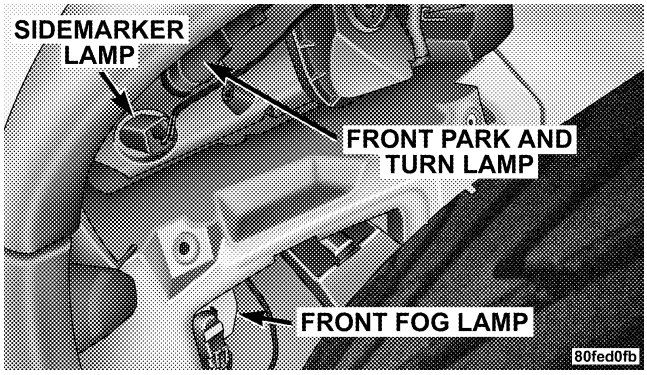

NOTE: On vehicles equipped with High Intensity Discharge Headlights (HID), when the headlights are turned on there is a blue hue to the lights. This diminishes and becomes more white after approximately 10 seconds, as the system charges.

High Intensity Discharge Headlights (HID)

The headlights are a type of high voltage discharge tube. High voltage can remain in the circuit even with the headlight switch off and the key removed. **Because of this, you should not attempt to service a headlight bulb yourself. If a headlight bulb fails, take your vehicle to an authorized dealer for service.**

WARNING!
A transient high tension occurs at the bulb sockets of High Intensity Discharge (HID) headlights when the headlight switch is turned ON. It may cause serious electrical shock or electrocution if not serviced properly. See your authorized dealer for service.

NOTE: If High Intensity Discharge (HID) lights are not working, recycle the headlight switch 4 times to see if it will restrike.

Tail, Tail/Stop, and Marker Lamp Bulb Replacement

1. Open the trunk. Remove two access panel fasteners. Remove the access panel.

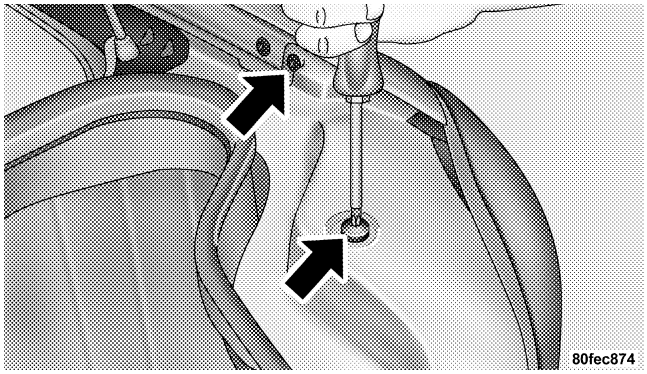

2. Twist sockets counter-clockwise to pull out bulbs. Replace tail, tail/stop, or marker lamp bulb.

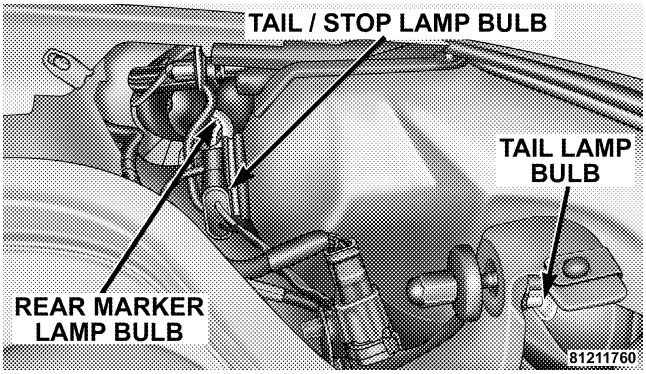

3. Reinstall the appropriate bulb and socket assembly. Replace the access panel. Close the trunk.

Backup and Rear Turn Signal Lamp Bulb Replacement

1. Open the trunk. Remove two access panel fasteners. Remove the access panel.

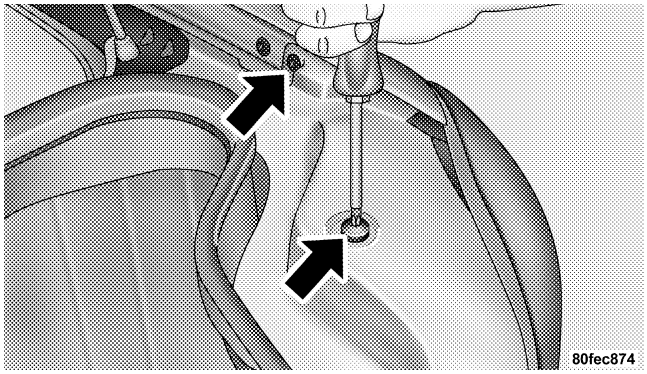

2. Remove three plastic nuts from the upper lamp assembly.

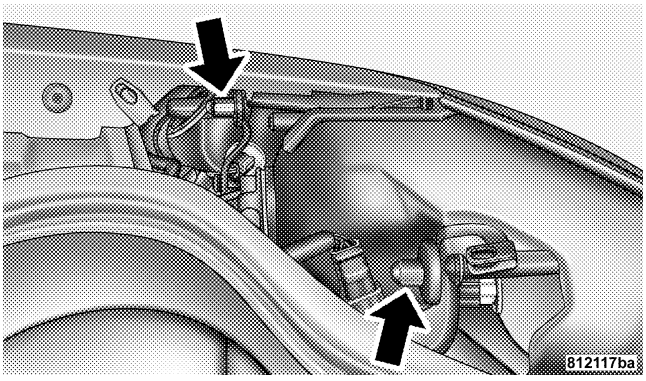

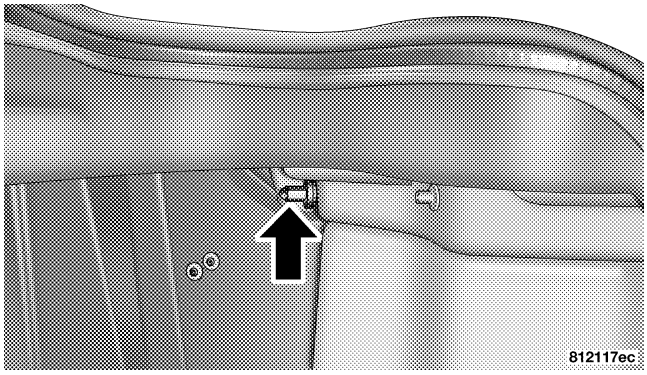

3. Twist sockets of the three bulbs shown counterclockwise. Disconnect bulb and socket assemblies from the upper lamp assembly. Pull the upper lamp assembly clear in order to access backup and rear turn signal lamp bulbs.

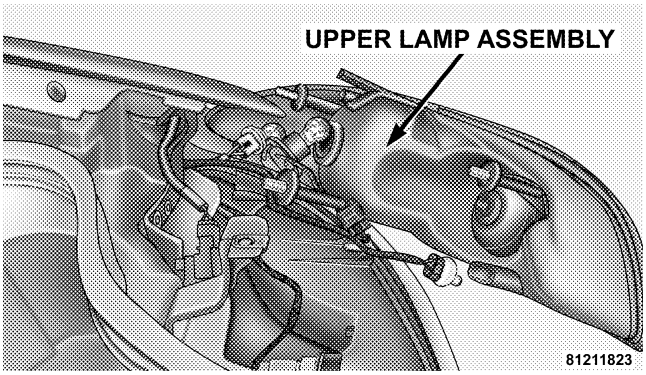

4. Replace the backup or rear turn signal lamp bulb. Reinstall the appropriate bulb and socket assembly. Reinstall the three bulb and socket assemblies in the upper lamp assembly. Reinstall the upper lamp assembly. Replace the access panel. Close the trunk.

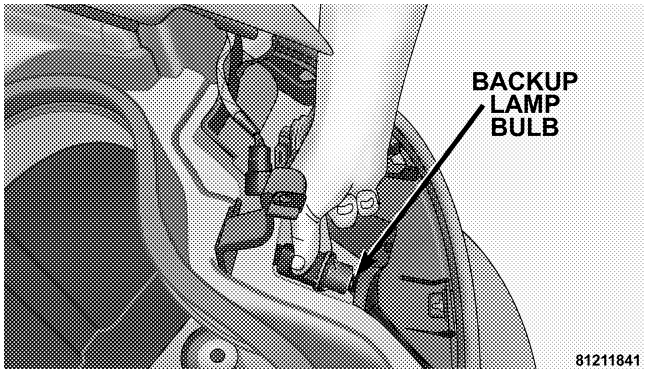

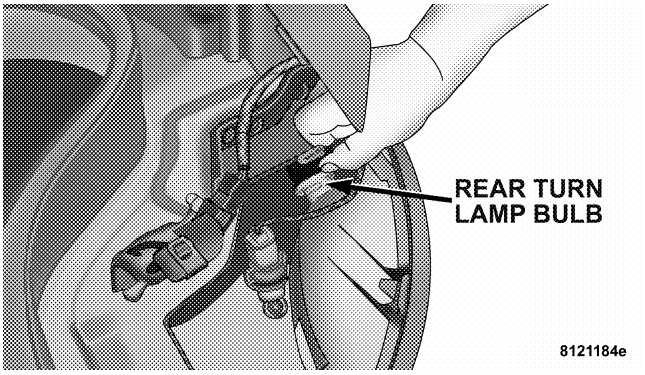

License Plate Light

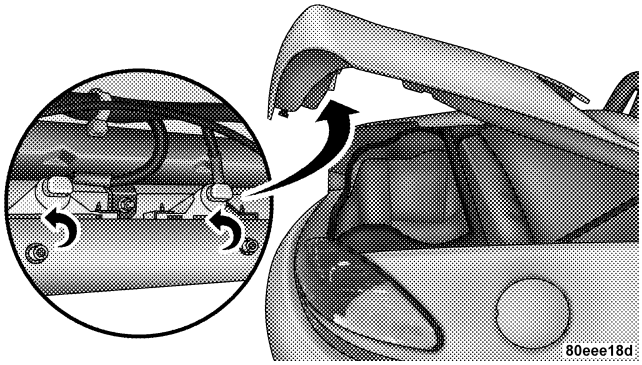

Twist off sockets counter-clockwise and pull out bulbs. Replace as required.

Headlight Aiming

The headlights on your new Viper were aimed at the factory. The factory setting was made at a no load setting. A great increase in weight will change the aiming and it may be necessary to readjust the headlights if you typically carry an excessive amount of weight in the trunk or otherwise suspect misalignment.

Aiming Check

Each headlight assembly can be adjusted up and down only. No left to right adjustment is necessary. To check, proceed as follows:

1. Fill the fuel tank and park the vehicle on level ground. A driveway is not normally level. If in doubt and you have no way to check levelness, do not attempt to adjust the headlights.

2. Mark the position of the headlights on a wall prior to loading the vehicle. Load the trunk with the items you normally carry. Have someone sit in the driver's seat who is about the same weight as the person who drives the vehicle.

3. Push down on the front and rear of the vehicle several times to make sure that the suspension has settled.

4. Then readjust the headlights to the original position.

NOTE: If any further adjustments are necessary, contact your dealership.

FLUIDS AND CAPACITIES

	U.S.	Metric
Fuel (approximate)		
8.3 Liter Engine (Premium 91 Octane)	18 gallons	68 liters
Engine Oil-With Filter		
8.3 Liter Engines (0W-40)	10 qts.	9.5 Liters
Cooling System *		
8.3 Liter Engines* (Mopar® Antifreeze/Coolant 5 Year/ 102,000 Mile Formula)	16 qts.	15 Liters

* Includes heater and coolant recovery bottle filled to MAX level.

RECOMMENDED FLUIDS, LUBRICANTS AND GENUINE PARTS

Engine

Component	Fluid, Lubricant, or Genuine Part
Engine Coolant	Mopar® Antifreeze/Coolant 5 Year/102,000 Mile Formula HOAT (Hybrid Organic Additive Technology)
Engine Oil	Use API rated SL/CF full synthetic engine oil. SAE 0W-40 is recommended. Refer to the engine oil viscosity chart for the correct SAE grade meeting DaimlerChrysler Material Standard MS-10725.
Engine Oil Filter	Mopar® Engine Oil Filter
Spark Plugs	Refer to the Vehicle Emission Control Information label in the engine compartment.
Fuel Selection	Premium Unleaded 91 Octane Only or higher

Chassis

Component	Fluid, Lubricant, or Genuine Part
Transmission	Mopar Synthetic Manual Transmission Lubricant SAE 75W-85 (Castrol Syntorq LT 75W/85)
Rear Axle	Mopar Synthetic Gear and Axle Lubricant SAE 75W-140, with Limited Slip Additive Friction Modifier
Brake Master Cylinder	Mopar® Brake & Clutch Fluid DOT 4 Motor Vehicle
Power Steering Reservoir	ATF+4

Body

Component	Fluid, Lubricant, or Genuine Part
Hinges: Door, Trunk & Hood Springs and Links	Mopar® Spray White Lube
Latches: Door, Hood & Trunk	Mopar® Multi-Purpose Lube NLGI Grade 2
Door Hinge Check Spring	Lubriplate Mo-Lith No. 2 Grease or Petrocan Multiflex Moly EP 2 Grease
Seat Regulator & Track	Mopar® Multi-Purpose Lube NLGI Grade 2
Window System Components	Mopar® Spray White Lube
Lock Cylinders	Mopar® Spray White Lube
Parking Brake Mechanism	Mopar® Spray White Lube

MAINTENANCE SCHEDULES

CONTENTS

■ Emission Control System Maintenance 218

■ Maintenance Schedules 218

□ Schedule “B” 221

□ Schedule “A” 228

EMISSION CONTROL SYSTEM MAINTENANCE

The "Scheduled" maintenance services, listed in **bold type** must be done at the times or mileages specified to assure the continued proper functioning of the emission control system. These, and all other maintenance services included in this manual, should be done to provide best vehicle performance and reliability. More frequent maintenance may be needed for vehicles in severe operating conditions such as dusty areas and very short trip driving.

Inspection and service also should be done any time a malfunction is suspected.

NOTE: Maintenance, replacement, or repair of the emission control devices and systems on your vehicle may be performed by any automotive repair establishment or individual using any automotive part which has been certified pursuant to U.S. EPA or, in the State of California, California Air Resources Board regulations.

MAINTENANCE SCHEDULES

There are two maintenance schedules that show the **required** service for your vehicle.

First is Schedule **"B"**. It is for vehicles that are operated under the conditions that are listed below and at the beginning of the schedule.

- Day or night temperatures are below 32° F (0° C).
- Stop and go driving.
- Extensive engine idling.
- Driving in dusty conditions.
- Short trips of less than 10 miles (16 km).
- More than 50% of your driving is at sustained high speeds during hot weather, above 90° F (32° C).
- Trailer towing. ◊

- Taxi, police, or delivery service (commercial service). ◊
- Off-road or desert operation.
- **If equipped for and operating with E-85 (ethanol) fuel.**

NOTE: If **ANY** of these apply to you then change your engine oil every 3,000 miles (5,000 km) or 3 months, whichever comes first and follow schedule B of the "Maintenance Schedules" section of this manual.

NOTE: If **ANY** of these apply to you then flush and replace the engine coolant every 102,000 miles (164,000 km) or 60 months, whichever comes first, and follow schedule B of the "Maintenance Schedules" section of this manual.

NOTE: Most vehicles are operated under the conditions listed for Schedule "B".

Second is Schedule **"A"**. It is for vehicles that are not operated under any of the conditions listed under Schedule "B".

Use the schedule that best describes your driving conditions. Where time and mileage are listed, follow the interval that occurs first.

NOTE: Under no circumstances should oil change intervals exceed 6 months or 6,000 miles, whichever comes first.

CAUTION!

Failure to perform the required maintenance items may result in damage to the vehicle.

At Each Stop for Fuel

- Check the engine oil level about 5 minutes after a fully warmed engine is shut off. Checking the oil level while the vehicle is on level ground will improve the accuracy of the oil level reading. Add oil only when the level is at or below the ADD or MIN mark.
- Check the windshield washer solvent and add if required.

Once a Month

- Check tire pressure and look for unusual wear or damage.
- Inspect the battery and clean and tighten the terminals as required.
- Check the fluid levels of coolant reservoir, brake master cylinder, power steering and transmission and add as needed.
- Check all lights and all other electrical items for correct operation.

At Each Oil Change

- Change the engine oil filter.
- Inspect the exhaust system.
- Inspect the brake hoses.
- Inspect the suspension components.
- Lubricate door hinges and check springs.
- Check the engine coolant level, hoses, and clamps.
- Check power steering fluid level.

SCHEDULE "B"

Follow schedule "B" if you usually operate your vehicle under one or more of the following conditions.

- Day or night temperatures are below 32° F (0° C).
- Stop and go driving.
- Extensive engine idling.
- Driving in dusty conditions.
- Short trips of less than 10 miles (16 km).
- More than 50% of your driving is at sustained high speeds during hot weather, above 90° F (32° C).
- Trailer towing.
- Taxi, police, or delivery service (commercial service).
- Off-road or desert operation.
- **If equipped for and operating with E-85 (ethanol) fuel.**

NOTE: If **ANY** of these apply to you then change your engine oil every 3,000 miles (5 000 km) or 3 months, whichever comes first and follow schedule "B" of the "Maintenance Schedules" section of this manual.

NOTE: IF **ANY** of these apply to you then flush and replace the engine coolant every 102,000 miles (164,000 km) or 60 months, whichever comes first, and follow schedule B of the "Maintenance Schedules" section of this manual.

Miles (Kilometers)	**3,000 (5 000)**	**6,000 (10 000)**	**9,000 (14 000)**	**12,000 (19 000)**	**15,000 (24 000)**	**18,000 (29 000)**
Change engine oil and engine oil filter, if not replaced at 3 months.	X	X	X	X	X	X
Inspect the brake linings.				X		
Change the rear axle fluid.				X		
Inspect and replace, if necessary, the **air cleaner filter.**					X	
Lubricate the front and rear suspension ball joints.					X	

Miles (Kilometers)	**21,000 (34 000)**	**24,000 (38 000)**	**27,000 (43 000)**	**30,000 (48 000)**	**33,000 (53 000)**	**36,000 (58 000)**
Change engine oil and engine oil filter, if not replaced at 3 months.	X	X	X	X	X	X
Lubricate the front and rear suspension ball joints.				X		
Inspect the brake linings.		X				X
Change the rear axle fluid.		X				X
Inspect and replace, if necessary, the **air cleaner filter.**				X		
Replace the **spark plugs.**				X		
Change the transmission fluid.	X					
Inspect and replace, if necessary, the **PCV orifice.** *				X		
Change the brake and clutch fluid.				X		

Miles (Kilometers)	**39,000 (62 000)**	**42,000 (67 000)**	**45,000 (72 000)**	**48,000 (77 000)**	**51,000 (82 000)**	**54,000 (86 000)**
Change engine oil and engine oil filter, if not replaced at 3 months.	X	X	X	X	X	X
Lubricate the front and rear suspension ball joints.			X			
Inspect the brake linings.				X		
Inspect and replace, if necessary, the **engine air cleaner filter.**			X			
Change the transmission fluid.		X				
Change the rear axle fluid.				X		

Miles (Kilometers)	**57,000 (91 000)**	**60,000 (96 000)**	**63,000 (101 000)**	**66,000 (106 000)**	**69,000 (110 000)**	**72,000 (115 000)**
Change engine oil and engine oil filter, if not replaced at 3 months.	X	X	X	X	X	X
Lubricate the front and rear suspension ball joints.		X				
Change the rear axle fluid.		X				X
Inspect the brake linings.		X				X
Inspect and replace, if necessary, the **air cleaner filter.**		X				
Replace the **spark plugs.**		X				
Replace the **ignition cables.**		X				
Inspect and replace, if necessary, the **PCV orifice.** *		X				
Inspect and replace the Auto Tension Drive Belt as needed.		X				
Change the brake and clutch fluid.		X				
Change the transmission fluid.			X			
Flush and replace engine coolant at 60 months, if not done at 102,000 miles.		X				

Miles (Kilometers)	**75,000 (120 000)**	**78,000 (125 000)**	**81,000 (130 000)**	**84,000 (134 000)**	**87,000 (139 000)**	**90,000 (144 000)**
Change engine oil and engine oil filter, if not replaced at 3 months.	X	X	X	X	X	X
Lubricate the front and rear suspension ball joints.	X					X
Inspect the brake linings.				X		
Change the rear axle fluid.				X		
Inspect and replace, if necessary, the **air cleaner filter.**	X					X
Replace the **spark plugs.**						X
Change the brake and clutch fluid.						X
Inspect and replace, if necessary, the **PCV orifice.** *						X
Inspect and replace the Auto Tension Drive Belt as needed. ‡	X					X
Change the transmission fluid.				X		

Miles (Kilometers)	**93,000 (149 000)**	**96,000 (154 000)**	**99,000 (158 000)**	**102,000 (163 000)**	**105,000 (168 000)**
Change engine oil and engine oil filter, if not replaced at 3 months.	X	X	X	X	X
Inspect the brake linings.		X			
Change the rear axle fluid.		X			
Inspect and replace, if necessary, the **engine air cleaner filter.**					X
Lubricate the front and rear suspension ball joints.					X
Change the transmission fluid.					X
Inspect and replace the Auto Tension Drive Belt as needed. Not required if the belt was previously replaced.					X
Flush and replace the engine coolant, if not replaced at 60 months.				X	

* This maintenance is recommended by DaimlerChrysler Corporation to the owner but is not required to maintain the warranty on the PCV orifice.

‡ This maintenance is not required if previously replaced.

Inspection and service should also be performed anytime a malfunction is observed or suspected. Retain all receipts.

SCHEDULE "A"

Miles **(Kilometers)** **[Months]**	**6,000** **(10 000)** **[6]**	**12,000** **(19 000)** **[12]**	**18,000** **(29 000)** **[18]**	**24,000** **(38 000)** **[24]**	**30,000** **(48 000)** **[30]**	**36,000** **(58 000)** **[36]**
Change engine oil and engine oil filter.	X	X	X	X	X	X
Change the rear axle fluid.			X			X
Inspect the brake linings.			X			X
Lubricate the front and rear suspension ball joints.					X	
Inspect and replace, if necessary, the **engine air cleaner filter.**					X	
Replace the **spark plugs.**					X	

Miles **(Kilometers)** **[Months]**	**42,000** **(67 000)** **[42]**	**48,000** **(77 000)** **[48]**	**54,000** **(86 000)** **[54]**	**60,000** **(96 000)** **[60]**	**66,000** **(106 000)** **[66]**
Change engine oil and engine oil filter.	X	X	X	X	X
Inspect the brake linings.			X		
Change the rear axle fluid.			X		
Inspect and replace, if necessary, the **engine air cleaner filter.**				X	
Replace the **ignition cables.**				X	
Replace the **spark plugs.**				X	
Inspect and replace the Auto Tension Drive Belt as needed.				X	
Lubricate the front and rear suspension ball joints.				X	
Inspect and replace, if necessary, the **PCV orifice.** *				X	
Flush and replace the engine coolant at 60 months, if not done at 102,000 miles.				X	

Miles (Kilometers) [Months]	**72,000 (115 000) [72]**	**78,000 (125 000) [78]**	**84,000 (134 000) [84]**	**90,000 (144 000) [90]**	**96,000 (154 000) [96]**	**102,000 (163 000) [102]**
Change engine oil and engine oil filter.	X	X	X	X	X	X
Inspect the brake linings.	X			X		
Inspect and replace, if necessary, the **engine air cleaner filter.**				X		
Replace the **spark plugs.**				X		
Change the rear axle fluid.	X			X		
Inspect and replace the Auto Tension Drive Belt as needed. ‡	X		X		X	
Lubricate the front and rear suspension ball joints.				X		
Inspect and replace, if necessary, the **PCV orifice.** *				X		
Flush and replace the engine coolant, if not replaced at 60 months.						X

* This maintenance is recommended by DaimlerChrysler Corporation to the owner but is not required to maintain the warranty on the PCV orifice.

‡ This maintenance is not required if previously replaced.

Inspection and service should also be performed anytime a malfunction is observed or suspected. Retain all receipts.

WARNING!

You can be badly injured working on or around a motor vehicle. Do only that service work for which you have the knowledge and the right equipment. If you have any doubt about your ability to perform a service job, take your vehicle to a competent mechanic.

IF YOU NEED CONSUMER ASSISTANCE

CONTENTS

- Suggestions For Obtaining Service For Your Vehicle 234
  - Prepare For The Appointment 234
  - Prepare A List 234
  - Be Reasonable With Requests 234
- If You Need Assistance 235
- Warranty Information 237
- Mopar® Parts 239
- Reporting Safety Defects 239
  - In Canada 239
- Publication Order Forms 240
- Department Of Transportation Uniform Tire Quality Grades 241
  - Treadwear 241
  - Traction Grades 241
  - Temperature Grades 242

SUGGESTIONS FOR OBTAINING SERVICE FOR YOUR VEHICLE

Prepare For The Appointment

If you're having warranty work done, be sure to have the right papers with you. Take your warranty folder. All work to be performed may not be covered by the warranty, discuss additional charges with the service manager. Keep a maintenance log of your vehicle's service history. This can often provide a clue to the current problem.

Prepare A List

Make a written list of your vehicle's problems or the specific work you want done. If you've had an accident, or work done that is not on your maintenance log, let the service advisor know.

Be Reasonable With Requests

If you list a number of items, and you must have your vehicle by the end of the day, discuss the situation with the service advisor and list the items in order of priority. At many dealers you may obtain a rental vehicle at a minimal daily charge. If you need a rental, it is advisable to make these arrangements when you call for an appointment.

IF YOU NEED ASSISTANCE

The manufacturer and its dealers are vitally interested in your satisfaction. We want you to be happy with our products and services.

Warranty service must be done by an authorized Chrysler, Dodge, or Jeep dealer. We strongly recommend that you take your vehicle to you selling dealer. They know you and your vehicle best, and are most concerned that you get prompt and high quality service. The manufacturer's dealers have the facilities, factory-trained technicians, special tools, and the latest information to assure your vehicle is fixed correctly and in a timely manner.

This is why you should always talk to your dealer's service manager first. Most matters can be resolved with this process.

- If for some reason you are still not satisfied, talk to the general manager or owner of the dealership. They want to know if you need assistance.
- If your dealership is unable to resolve the concern, you may contact the Manufacturer's Customer Center.

Any communication to the Manufacturer's Customer Center should include the following information:

- Owner's name and address
- Owner's telephone number (home and office)
- Dealership name
- Vehicle identification number
- Vehicle delivery date and mileage

DaimlerChrysler Motors Corporation Customer Center
P.O. Box 21–8004
Auburn Hills, MI 48321–8004
Phone: (800) 992-1997

DaimlerChrysler Canada Inc. Customer Center
P.O. Box 1621
Windsor, Ontario N9A 4H6
Phone —(800) 465–2001

In Mexico contact:
Av. Prolongacion Paseo de la Reforma, 1240
Sante Fe C.P. 05109
Mexico, D. F.
In Mexico (915) 729–1248 or 729–1240
Outside Mexico (525) 729–1248 or 729–1240

Customer Assistance For The Hearing Or Speech Impaired (TDD/TTY)
To assist customers who have hearing difficulties, the manufacturer has installed special TDD (Telecommunication Devices for the Deaf) equipment at its Customer Center. Any hearing or speech impaired customer who has access to a TDD or a conventional teletypewriter (TTY) in the United States can communicate with the manufacturer by dialing 1–800–380–CHRY.

Service Contract
You may have purchased a service contract for your vehicle to help protect you from the high cost of unexpected repairs after your manufacturer's new vehicle limited warranty expires. The manufacturer stands behind only the manufacturer's Service Contracts. If you purchased a manufacturer's Service Contract, you will receive Plan Provisions and an Owner Identification Card in the mail within three weeks of your vehicle delivery date. If you have any questions about your service

contract, call the manufacturer's Service Contract National Customer Hotline at 1-800-521-9922.

The manufacturer will not stand behind any service contract that is not the manufacturer's Service Contract. It is not responsible for any service contract other than the manufacturer's Service Contract. If you purchased a service contract that is not a manufacturer's Service Contract, and you require service after your manufacturer's new vehicle limited warranty expires, please refer to your contract documents, and contact the person listed in those documents.

We appreciate that you have made a major investment when you purchased your new vehicle. Your dealer has also made a major investment in facilities, tools, and training to assure that you are absolutely delighted with your ownership experience. You'll be pleased with their sincere efforts to resolve any warranty issues or related concerns.

WARRANTY INFORMATION

See your manufacturer's Warranty Information Booklet for information on warranty coverage and transfer of warranty.

DESCRIPTION	1 Yr/ 12,000	2 Yr/ 24,000	3 Yr/ 36,000	3 Yr/ 50,000	3 Yr/ Unlmtd	5 Yr/ 100,000	7 Yr/ 70,000	8 Yr/ 80,000
Basic Limited Warranty Coverage	■	■	■					
Special Extended Warranty Coverage								
Anti-Corrosion Perforation Limited Warranty: All Panels	■	■	■	■	■			
Federal Emission Warranty	■	■						
Federal Emission Warranty – Specified Components	■	■	■	■	■	■	■	■
California Emission Warranty	■	■	■	■				
California Emission Warranty – Specified Components	■	■	■	■	■	■	■	

NOTE: Vehicles used as a police vehicle, taxi, limousine, postal delivery vehicles, ambulance or rental vehicles are covered only under the 3 year/36,000 mile Basic Limited Warranty.

8148a010

U.S. ONLY

MOPAR® PARTS

Mopar® fluids, lubricants, parts, and accessories are available from your dealer. They will help you keep your vehicle operating at its best.

REPORTING SAFETY DEFECTS

In the 50 United States and Washington D.C.: If you believe that your vehicle has a defect which could cause a crash or cause injury or death, you should immediately inform the National Highway Traffic Safety Administration (NHTSA) in addition to notifying the manufacturer.

If NHTSA receives similar complaints, it may open an investigation, and if it finds that a safety defect exists in a group of vehicles, it may order a recall and remedy campaign. However, NHTSA cannot become involved in individual problems between you, your dealer, and the manufacturer.

To contact NHTSA, you may either call the Auto Safety Hotline toll free at 1-800-424-9393 (or 366-0123 in Washington DC area) or write to: NHTSA, U.S. Dept. of Transportation, Washington DC 20590. You can also obtain other information about motor vehicle safety from the Hotline.

In Canada:

If you believe that your vehicle has a safety defect, you should contact the Customer Service Department immediately. Canadian customers who wish to report a safety defect to the Canadian government should write to Transport Canada, Motor Vehicle Defect Investigations and Recalls, 2780 Sheffield Road, Ottawa, Ontario K1B 3V9.

PUBLICATION ORDER FORMS

To order the following manuals, you may use either the website or the phone numbers listed below. Visa, Mastercard, American Express, and Discover orders are accepted. If you prefer mailing your payment, please call for an order form.

NOTE: A street address is required when ordering manuals. (No P.O. Boxes).

- *Service Manuals.*

  These comprehensive service manuals provide the information that students and professional technicians need in diagnosing/troubleshooting, problem solving, maintaining, servicing and repairing DaimlerChrysler Corporation vehicles. A complete working knowledge of the vehicle, system and/or components is written in straightforward language with illustrations, diagrams and charts.

- *Diagnostic Procedure Manuals.*

  Filled with diagrams, charts and detailed illustrations, these practical manuals make it easy for students and technicians to find and fix problems on computer-controlled vehicle systems and features. They show exactly how to find and correct problems the first time, using step-by-step troubleshooting and driveability procedures, proven diagnostic tests and a complete list of all tools and equipment.

- *Owner's Manuals.*

  These manuals have been prepared with the assistance of service and engineering specialists to acquaint you with specific Chrysler group vehicles. Included are starting, operating, emergency and maintenance procedures as well as specifications, capabilities and safety tips.

Call Toll Free at **1–800–890–4038 (U.S.)** or **1–800–387–1143 (Canada)**

Or

Visit us on the World Wide Web at:

www.techauthority.daimlerchrysler.com or **www.daimlerchrysler.ca/manuals**

DEPARTMENT OF TRANSPORTATION UNIFORM TIRE QUALITY GRADES

The following describes the tire grading categories established by the National highway Traffic Safety Administration. The specific grade rating assigned by the tire's manufacturer in each category is shown on the sidewall of the tires on your car.

All Passenger Car Tires Must Conform to Federal Safety Requirements in Addition to These Grades.

Treadwear

The treadwear grade is a comparative rating based on the wear rate of the tire when tested under controlled conditions on a specified government test course. For example, a tire graded 150 would wear one and a half (1 1/2) times as well on the government course as a tire graded 100. The relative performance of tires depends upon the actual conditions of their use, however, and may depart significantly from the norm due to variations in driving habits, service practices and differences in road characteristics and climate.

Traction Grades

The traction grades, from highest to lowest, are A, B, and C, and they represent the tire's ability to stop on wet pavement as measured under controlled conditions on specified government test surfaces of asphalt and concrete. A tire marked C may have poor traction performance.

WARNING!

The traction grade is based on braking (straight-ahead) traction tests and does not include cornering (turning) performance.

Temperature Grades

The temperature grades are A (highest), B, and C, representing the tire's resistance to the generation of heat and its ability to dissipate heat when tested under controlled conditions on a specified indoor laboratory test wheel. Sustained high temperature can cause the material of the tire to degenerate and reduce tire life, and excessive temperature can lead to sudden tire failure. The grade C corresponds to a level of performance which all passenger car tires must meet under the Federal Motor Vehicle Safety Standard No. 109. Grades B and A represent higher levels of performance on the laboratory test wheel than the minimum required by law.

WARNING!

The temperature grade is established for a tire that is properly inflated and not overloaded. Excessive speed, underinflation, or excessive loading, either separately or in combination, can cause heat buildup and possible tire failure.

INDEX

About Your Brakes 117
ABS (Anti-Lock Brake) System 87
Accessory Delay, Power 13,26
Adding Engine Coolant (Antifreeze) 185
Adding Fuel 145
Adding Washer Fluid 182
Additives, Fuel 144
Adjustable Pedals 79
Aiming Headlights 212
Air Cleaner, Engine (Engine Air Cleaner Filter) . . . 171
Air Conditioner Maintenance 176
Air Conditioning 104,176
Air Conditioning Refrigerant 177
Air Pressure, Tires 131
Airbag 41
Airbag Deployment 45
Airbag Light 44,91
Airbag Maintenance 49
Airbag On/Off Switch 35,46
Alarm System 20
Alignment and Balance 138
Alterations/Modifications, Vehicle 7
Antenna 103
Antifreeze (Engine Coolant) 184,185,212
  Capacities 212
  Disposal 186
Anti-Lock Warning Light 87
Anti-Theft Security Alarm 20
Appearance Care 194
Auto Down Power Windows 26
Automatic Door Locks 15
Automatic Transmission
  Adding Fluid 214
  Fluid Type 214

Ball Joints 179
Battery 90,171
  Emergency Starting 150

Gas Caution 173
Jump Starting 150
Keyless Transmitter Replacement 19
Bearings 194
Belt System, Six Point 32
Belts, Drive 168
Belts, Seat 26
Body Damage 195
Body Mechanism Lubrication 179,180
Body Mechanisms 181
Boot, Convertible Top 59,64
B-Pillar Location 126
Brake, Parking 116
Brake System 117,188
Anti-Lock 117
Fluid Check 190,214
Hoses 189
Master Cylinder 191
Warning Light 91
Break-In Recommendations, New Vehicle 50,121
Bulb Replacement 205
Bulbs, Light 204,205

Capacities, Antifreeze (Engine Coolant) 212
Capacities, Fluid 212
Capacity, Cargo Weight 146
Caps, Filler
Power Steering 178
Radiator (Coolant Pressure) 185
Car Washes 197
Carbon Monoxide Warning 51,145
Cargo Compartment
Capacity 146
Carpeting 196
Catalytic Converter 168
CD Player 95,98
CD Player Maintenance 103
Chains, Tire 140

Charging System Light 90
Chart, Tire Sizing 123
Check Engine Light (Malfunction Indicator Light) . 162
Checks, Safety 51
Child Restraint 34,39
Child Restraint Tether Anchors 37
Circuit Breakers 197
Clean Air Gasoline 142
Climate Control 104
Clock 93
Compact Disc Maintenance 103
Compact Spare Tire 134
Console 66
Console, Floor 66
Contract, Service 236
Converter, Catalytic 168
Convertible 55
Convertible Boot 59,64
Convertible Top 55,196
Convertible Top Maintenance 196
Coolant Pressure Cap 185
Cooling System 183
  Adding Coolant (Antifreeze) 185
  Coolant Capacity 212
  Coolant Level 183,187
  Disposal of Used Coolant 186
  Drain, Flush, and Refill 184
  Inspection 183
  Points to Remember 187
  Pressure Cap 185
  Radiator Cap 185
  Rubber and Plastic Components 188
  Selection of Coolant 184,212,213
Crankcase Emission Control System 171
Customer Assistance 235

Daytime Running Lights 76
Dealer Service 163

Defroster, Windshield 51
Delay (Intermittent) Wipers 82
Diagnostic System, Onboard 161
Dimmer Control 74
Dimmer Switch, Headlight 78
Disposal
  Antifreeze (Engine Coolant) 186
Door Locks 13
Door Locks, Automatic 15
Doors 13
Drive Belts 168
Driving
  On Slippery Surfaces 154

Electric Remote Mirrors 68
Emergency Brake 116
Emergency, In Case of
  Freeing Vehicle When Stuck 155
  Hazard Warning Flasher 148
  Jump Starting 150
  Overheating 148
  Towing 155
Emission Control System Maintenance 162,218
Engine 160
  Break-In Recommendations 50
  Checking Oil Level 164
  Compartment 160
  Coolant (Antifreeze) 183,213
  Cooling 90,183
  Exhaust Gas Caution 51,145
  Fails to Start 112
  Fuel Requirements 142,212
  Oil 164,212,213
  Oil Change Interval 165
  Oil Disposal 167
  Oil Filter 167
  Oil Selection 166,212
  Overheating 90,148

Engine Oil Viscosity 166,212
Engine Oil Viscosity Chart 166
Exhaust Gas Caution 51,145,182
Exhaust System 182
Exterior Lights 205

Fan 105
Filters
  Air Cleaner 171
  Engine Oil 213
Flashers
  Hazard Warning 87,148
  Turn Signal 87
Flash-To-Pass 78
Floor Console 66
Fluid Capacities 212
Fluid Leaks 52
Fluid Level Checks
  Brake 190,214
  Capacities 212
  Cooling System 183
  Engine Oil 164
  Manual Transmission 193
  Power Steering 178,214
Fluids 213
Fog Lights 75,77,90
Four-Way Hazard Flasher 148
Freeing A Stuck Vehicle 155
Fuel 142
  Adding 145
  Additives 144
  Clean Air 142
  Gasoline 142
  Gauge 93
  Octane Rating 213
  Requirements 142,212
  Tank Capacity 212
Fueling 145

Fuses 197

Gas Cap 145
Gasoline 142
Gasoline, Clean Air 142
Gasoline, Reformulated 142
Gasoline/Oxygenate Blends 143
Gauges 92
  Coolant Temperature 90,92
  Fuel 93
  Oil Pressure 92
  Speedometer 86
  Tachometer 92
  Voltmeter 93
General Information 18
Glass Cleaning 195
Ground Clearance 141

Hazard Warning Flasher 87,148
Headlights 207
  Aiming 212
  High Beam 78
  High Beam/Low Beam Select Switch 78
  Passing 78
  Switch 75
  Time Delay 76
Heater 104
High Beam Indicator 89
Hood Latch Maintenance 180
Hood Release 71
Hoses 188,189
Hydraulic Clutch Fluid 192

Ignition
  Key 11
  Timing 170
  Wiring System 170
Infant Restraint 34

Inside Rearview Mirror 67
Instrument Cluster 86
Instrument Panel and Controls 85
Instrument Panel Lens Cleaning 195
Interior and Instrument Lights . . . . . *See Lights*
Interior Lighting 74
Interior Lights 74
Intermittent Wipers 82
Introduction 4

Jump Starting 150

Key-In Reminder 12
Keyless Entry System 15
Keys 11
Knee Bolster 41

Lap/Shoulder Belts 27
LATCH (Lower Anchors and Tether for CHildren) . 36
Latches
  Hood 71,180
Lead Free Gasoline 142
Light Bulbs 205
Lights 52,73
  Airbag 44,91
  Anti-Lock Warning 87
  Back-Up 74
  Brake Warning 91
  Bulb Replacement 204
  Daytime Running 76
  Dimmer Switch, Headlight 74,78
  Engine Temperature Warning 90
  Exterior Check 52
  Fog 75,77,90
  Hazard Warning Flasher 87,148
  Headlight Switch 75
  Headlights 75,207
  High Beam 78

High Beam Indicator 89
Instrument Cluster 75
Interior 74
License 211
Lights On Reminder 76
Malfunction Indicator 88
Map Reading 73
Oil Pressure 90
Reading 73
Seat Belt Reminder 89
Service 204,205
Service Engine Soon (Malfunction Indicator) 88
Turn Signal 74,77,87
Loading Vehicle 146
Capacities 146
Tires 126
Locks
Door 13
Low Tire Indicator 139
Low Tire Pressure System 139
Lower Anchors and Tether for CHildren (LATCH) . 36
Lubricants 179,180
Lubrication, Body 179
Luggage/Cargo Capacity 146

Maintenance Free Battery 171
Maintenance Schedule 218
Light Duty Schedule ″B″ 221
Schedule ″A″ 228
Schedule ″B″ 221
Malfunction Indicator Light 88,162
Manual, Service 240
Manual Transmission 114
Shift Speeds 115
Master Cylinder 191
Message Center 87
Mirrors 67
Electric Remote 68

Outside 68
Rearview 67
Modifications/Alterations, Vehicle 7
Mopar Parts 163,239
Multi-Function Control Lever 74

New Vehicle Break-In Period 50

Occupant Restraints 26
Oil, Engine 164,212,213
Capacity 212
Change Interval 165
Checking 164
Disposal 167
Filter 167,213
Materials Added to 167
Pressure Gauge 92
Recommendation 166,212
Viscosity 212
Oil Filter, Selection 167
Onboard Diagnostic System 161,162
Operator Manuals (Owner's Manuals) 4
Overheating, Engine 148
Owner's Manual 4,240

Paint Care 195
Panic Alarm 17
Parking Brake 116
Parking On Hill 117
Passing Light 78
PCV Valve 171
Pedals, Adjustable 79
Pets 50
Pets, Transporting 50
Placard, Tire and Loading Information 127
Power
Accessory Delay 13,26
Brakes 117

Distribution Center 197
Steering 121,178
Windows 24
Pregnant Women and Seat Belts 33
Programming Transmitters 18

Radial Ply Tires 134
Radiator Cap (Coolant Pressure Cap) 185
Radio Antenna 103
Radio Broadcast Signals 94
Radio Operation 103
Radio (Sound Systems) 95
Rear Axle 193
Rear Wheel Bearings 194
Rearview Mirrors 67
Reclining Front Seats 71
Recommended Fluids, Lubricants and Genuine Parts 213
Reformulated Gasoline 142
Refrigerant 177
Reminder, Lights On 76
Reminder, Seat Belt 31,89
Remote Keyless Entry 15
Replacement Parts 163
Replacement Tires 137
Reporting Safety Defects 239
Restraints, Child 34
Restraints, Infant 34
Restraints, Occupant 26
Rocking Vehicle When Stuck 155
Rotation, Tires 141

Safety Checks Inside Vehicle 51
Safety Checks Outside Vehicle 52
Safety Defects, Reporting 239
Safety Information, Tire 122
Safety Tips 51
Schedule, Maintenance 218

Scheduled Maintenance 164
Seat Belt Maintenance 196
Seat Belt Reminder 31,89
Seat Belts 26,27
And Pregnant Women 33
Child Restraint 34,39
Extender 33
Front Seat 28
Inspection 51
Operating Instructions 28
Reminder 89
Seats 69
Adjustment 69
Reclining 71
Security Alarm (Theft Alarm) 20
Selection of Coolant 184,213
Selection of Oil 166
Service Assistance 234,235
Service Contract 236
Service Engine Soon Light (Malfunction Indicator) . 88
Service Manuals 240
Setting the Clock 93
Shift Indicator Light 88,115
Shift Speeds 114,115
Shift Speeds, Manual Transaxle 115
Side View Mirror Adjustment 68
Signals, Turn 87
Six Point Belt System 32
Slippery Surfaces, Driving On 154
Snow Tires 140
Spare Tire 134,135
Spark Plugs 168
Speedometer 86
Starting 111
Emergency (Jump Starting) 150
Engine Fails to Start 112
Starting and Operating 111

Steering
Linkage 180
Power 121,178
Tilt Column 78
Storage 202
Stuck, Freeing 155
Supplemental Restraint System - Airbag 41

Tachometer 92
Temperature Gauge, Engine Coolant 92
Theft Alarm 20
Theft System 20
Tilt Steering Column 78
Tire and Loading Information Placard 126,127
Tire Identification Number (TIN) 125
Tire Markings 122
Tire Safety Information 122
Tires 52,130,241
Air Pressure 130
Alignment 138
Chains 140
Compact Spare 134
General Information 130
High Speed 133
Inflation Pressures 131
Load Capacity 126,127
Quality Grading 241
Radial 134
Replacement 137
Rotation 141
Safety 52,122,130
Sizes 123
Snow Tires 140
Spinning 136
Storage 141
Tread Wear Indicators 137
Top Cover 59
Towing 146,155

Disabled Vehicle 155
Trailering 146
Traction 154
Trailer Towing 146
Transmission 193
Fluid 214
Shifting 114,115
Transmitter Battery Service 19
Transmitter Programming 18
Transmitter, Remote Keyless Entry 15,19
Transporting Pets 50
Tread Wear Indicators 137
Trip Odometer Reset Button 86
Trunk Release, Emergency 24
Turn Signals 77,87

Underbody Maintenance 196
Uniform Tire Quality Grades 241
Unleaded Gasoline 142
Upholstery Care 194

Vehicle Identification Number 6
Vehicle Loading 127,146
Vehicle Modifications/Alterations 7
Vehicle Storage 202
Vehicle Theft Alarm 20
Ventilation System 104
Vinyl Trim 194
Viscosity, Engine Oil 166,212
Voltmeter 93

Warning Flasher, Hazard 148
Warnings and Cautions 6
Warranty Information 237
Washer, Adding Fluid 182
Washers, Windshield 81,82,182
Wheel Alignment and Balance 138
Wheel Bearings 194

Wind Buffeting 26
Windows 24
  Power 24
Windshield Defroster 51
Windshield Washers 81,82,182
Windshield Wipers 81
Wipers, Intermittent 82
Wiring, Ignition 170

NOTES

NOTES

NOTES

NOTES

NOTES

NOTES

NOTES