Jeep®

2020 All-New Gladiator

OWNER'S MANUAL

VEHICLES SOLD IN CANADA

With respect to any vehicles sold in Canada, the name FCA US LLC shall be deemed to be deleted and the name FCA Canada Inc. used in substitution therefore.

DRIVING AND ALCOHOL

Drunken driving is one of the most frequent causes of accidents.

Your driving ability can be seriously impaired with blood alcohol levels far below the legal minimum. If you are drinking, don't drive. Ride with a designated non-drinking driver, call a cab, a friend, or use public transportation.

WARNING!

Driving after drinking can lead to an accident. Your perceptions are less sharp, your reflexes are slower, and your judgment is impaired when you have been drinking. Never drink and then drive.

This manual illustrates and describes the operation of features and equipment that are either standard or optional on this vehicle. This manual may also include a description of features and equipment that are no longer available or were not ordered on this vehicle. Please disregard any features and equipment described in this manual that are not on this vehicle.

FCA US LLC reserves the right to make changes in design and specifications, and/or make additions to or improvements to its products without imposing any obligation upon itself to install them on products previously manufactured.

Copyright © 2019 FCA US LLC

TABLE OF CONTENTS

1 INTRODUCTION 13

2 GETTING TO KNOW YOUR VEHICLE 16

3 GETTING TO KNOW YOUR INSTRUMENT PANEL 164

4 SAFETY 195

5 STARTING AND OPERATING 281

6 IN CASE OF EMERGENCY 388

7 SERVICING AND MAINTENANCE 436

8 TECHNICAL SPECIFICATIONS 500

9 MULTIMEDIA 510

10 CUSTOMER ASSISTANCE 646

11 INDEX 652

INTRODUCTION

- INTRODUCTION 13
- HOW TO USE THIS MANUAL 14
  - Essential Information 14
  - Symbols 14
- ROLLOVER WARNING 14
- CAMPERS 15
- WARNINGS AND CAUTIONS 15
- VEHICLE MODIFICATIONS/ALTERATIONS 15

GETTING TO KNOW YOUR VEHICLE

- VEHICLE USER GUIDE — IF EQUIPPED 16
- KEYS 18
  - Key Fob 18
- IGNITION SWITCH 23
  - Keyless Enter-N-Go — Ignition 23
  - Vehicle On Message 24
  - Depleted Key Fob Battery 25
- REMOTE STARTING SYSTEM — IF EQUIPPED 26
  - How To Use Remote Start 27
  - Remote Start Cancel Message — If Equipped 28
  - To Enter Remote Start Mode 28
  - To Exit Remote Start Mode Without Driving The Vehicle 28
  - To Exit Remote Start Mode And Drive The Vehicle 29
  - Remote Start Comfort Systems — If Equipped 29
  - General Information 29
- SENTRY KEY 30
  - Customer Key Programming 31
  - Replacement Keys 31
  - General Information 31
- VEHICLE SECURITY ALARM — IF EQUIPPED 32
  - To Arm The System 32
  - To Disarm The System 33
  - Rearming Of The System 33

- DOORS 33
  - Manual Door Locks 34
  - Power Door Locks — If Equipped 35
  - Keyless Enter-N-Go — Passive Entry (If Equipped) 36
  - Automatic Door Locks — If Equipped 40
  - Child-Protection Door Lock System — Rear Doors 40
  - Front Door Removal 41
  - Rear Door Removal 45
- SEATS 49
  - Manual Front Seats 49
  - Heated Seats — If Equipped 51
  - 60/40 Split Folding Rear Seat 52
  - Rear Seat Stadium Position 55
  - Rear Seat Armrest — If Equipped 56
- HEAD RESTRAINTS 56
  - Front Head Restraints 57
  - Rear Head Restraints 58
- STEERING WHEEL 59
  - Tilt/Telescoping Steering Column 59
  - Heated Steering Wheel — If Equipped 60
- MIRRORS 61
  - Inside Day/Night Mirror — If Equipped 61
  - Automatic Dimming Mirror — If Equipped 61
  - Outside Mirrors 62
  - Power Mirrors — If Equipped 63
  - Heated Mirrors — If Equipped 63
  - Vanity Mirrors 64
- EXTERIOR LIGHTS 64
  - Headlight Switch 64
  - Daytime Running Lights — If Equipped 64
  - High/Low Beam Switch 65
  - Flash-To-Pass 65
  - Automatic Headlights — If Equipped 65
  - Front Fog Lights — If Equipped 66
  - Turn Signals 66
  - Lane Change Assist — If Equipped 67
  - Lights-On Reminder 67
  - Bed Lights — If Equipped 67
- INTERIOR LIGHTS 68
  - Courtesy Lights 68
  - Dimmer Controls 68
- WINDSHIELD WIPERS AND WASHERS 69
  - Windshield Wiper Operation 69

- CLIMATE CONTROLS 72
  - Manual Climate Control Overview 72
  - Automatic Climate Controls Overview 76
  - Climate Control Functions 82
  - Automatic Temperature Control (ATC) — If Equipped 83
  - Operating Tips 83
- POWER WINDOWS — IF EQUIPPED 85
  - Auto-Down Feature 86
  - Wind Buffeting 86
- DUAL TOP — IF EQUIPPED 87
  - Removing The Hard Top 88
  - Installing The Hard Top 91
  - Installing The Soft Top 92
  - Removing The Soft Top 96
- FREEDOM TOP THREE-PIECE MODULAR HARD TOP — IF EQUIPPED 98
  - Front Panel(s) Removal 98
  - Freedom Top Storage Bag 99
  - Front Panel(s) Installation 102
  - Rear Hard Top Removal 102
  - Rear Hard Top Installation 105
- DOOR FRAME 106
  - Door Frame Removal 106
  - Door Frame Installation 108
- SOFT TOP — IF EQUIPPED 110
  - Lowering The Soft Top 112
  - Soft Top Rear Window Storage Bag 117
  - Raising The Soft Top 119
- FOLDING WINDSHIELD 125
  - Lowering The Windshield 126
  - Raising The Windshield 129
- HOOD 130
  - Opening The Hood 130
  - Closing The Hood 131
- TAILGATE 131
  - Opening 131
  - Three-Position Tailgate 132
  - Closing 134
- GARAGE DOOR OPENER (HOMELINK®) — IF EQUIPPED 135
  - Before You Begin Programming HomeLink® 136
  - Canadian/Gate Operator Programming 139
  - Using HomeLink® 140
  - Security 140
  - Troubleshooting Tips 141
  - General Information 141

- INTERNAL EQUIPMENT 142
  - Storage 142
  - Cupholders 148
  - Electrical Power Outlet 149
  - Power Inverters — If Equipped 150
  - Auxiliary Switches — If Equipped 152
- BED RAIL TIE DOWN SYSTEM — IF EQUIPPED 154
- TONNEAU COVER — IF EQUIPPED 156
  - Tonneau Cover Installation 156
  - Tonneau Cover Removal 160
- ROOF LUGGAGE RACK — IF EQUIPPED 162

GETTING TO KNOW YOUR INSTRUMENT PANEL

- INSTRUMENT CLUSTER 164
  - Instrument Cluster Descriptions 165
- INSTRUMENT CLUSTER DISPLAY 166
  - Instrument Cluster Display Location And Controls 167
  - Oil Life Reset — If Equipped 169
  - Off Road+ Display — If Equipped 170
  - Instrument Cluster Display Selectable Items 170
  - Instrument Cluster Display Menu Items 171
  - Battery Saver On, Battery Saver Mode Message, And Electrical Load Reduction Actions (If Equipped) 176
- WARNING LIGHTS AND MESSAGES 178
  - Red Warning Lights 178
  - Yellow Warning Lights 183
  - Yellow Indicator Lights 187
  - Green Indicator Lights 189
  - White Indicator Lights 190
  - Gray Indicator Lights 191
  - Blue Indicator Lights 191
- ONBOARD DIAGNOSTIC SYSTEM — OBD II 192
  - Onboard Diagnostic System (OBD II) Cybersecurity 192
- EMISSIONS INSPECTION AND MAINTENANCE PROGRAMS 193

SAFETY

- SAFETY FEATURES 195
  - Anti-Lock Brake System (ABS) 195
  - Electronic Brake Control (EBC) System 196
- AUXILIARY DRIVING SYSTEMS 208
  - Blind Spot Monitoring (BSM) — If Equipped 208
  - Forward Collision Warning (FCW) With Mitigation — If Equipped 215
  - Tire Pressure Monitor System (TPMS) 219
- OCCUPANT RESTRAINT SYSTEMS 228
  - Occupant Restraint Systems Features 228
  - Important Safety Precautions 228
  - Seat Belt Systems 229
  - Supplemental Restraint Systems (SRS) 240
  - Child Restraints 260
  - Transporting Pets 276
- SAFETY TIPS 276
  - Transporting Passengers 276
  - Exhaust Gas 277
  - Safety Checks You Should Make Inside The Vehicle 277
  - Periodic Safety Checks You Should Make Outside The Vehicle 280

STARTING AND OPERATING

- STARTING THE ENGINE 281
  - Manual Transmission — If Equipped 281
  - Automatic Transmission — If Equipped 281
  - Normal Starting 282
  - Extreme Cold Weather (Below –22°F Or –30°C) 285
  - If Engine Fails To Start 285
  - After Starting 286
- ENGINE BLOCK HEATER — IF EQUIPPED 286
- ENGINE BREAK-IN RECOMMENDATIONS 287
- PARKING BRAKE 287
- MANUAL TRANSMISSION — IF EQUIPPED 289
  - Shifting 290
  - Downshifting 291
- AUTOMATIC TRANSMISSION — IF EQUIPPED 293
  - Ignition Park Interlock 294
  - Brake/Transmission Shift Interlock System 294
  - Eight–Speed Automatic Transmission 294
- FOUR–WHEEL DRIVE OPERATION 302
  - Four-Position Transfer Case 302
  - Trac-Lok Rear Axle — If Equipped 305

- Axle Lock (Tru-Lok) — Rubicon Models 305
- Electronic Sway Bar Disconnect — If Equipped 306
- Off Road+ — If Equipped 308

■ ELECTRO-HYDRAULIC POWER STEERING 309

■ STOP/START SYSTEM — AUTOMATIC TRANSMISSION (IF EQUIPPED) 310
- Automatic Mode 311
- Possible Reasons The Engine Does Not Autostop 312
- To Start The Engine While In Autostop Mode 313
- To Manually Turn Off The Stop/Start System 313
- To Manually Turn On The Stop/Start System 314
- System Malfunction 314

■ STOP/START SYSTEM — MANUAL TRANSMISSION (IF EQUIPPED) 314
- Automatic Mode 315
- Possible Reasons The Engine Does Not Autostop 315
- To Start The Engine While In Autostop Mode 316
- To Manually Turn Off The Stop/Start System 317
- To Manually Turn On The Stop/Start System 317
- System Malfunction 317

■ SPEED CONTROL — IF EQUIPPED 318
- To Activate 318
- To Set A Desired Speed 319
- To Vary The Speed Setting 319
- To Accelerate For Passing 320
- To Resume Speed 321
- To Deactivate 321

■ ADAPTIVE CRUISE CONTROL (ACC) — IF EQUIPPED 321
- Adaptive Cruise Control (ACC) Operation 323
- Activating Adaptive Cruise Control (ACC) 323
- To Activate/Deactivate 324
- To Set A Desired ACC Speed 325
- To Cancel 326
- To Turn Off 326
- To Resume 326
- To Vary The Speed Setting 327
- Setting The Following Distance In ACC 329
- Overtake Aid 331
- ACC Operation At A Stop (Automatic Transmission Only) 331
- Adaptive Cruise Control (ACC) Menu 332

- Display Warnings And Maintenance 333
- Precautions While Driving With ACC 335
- General Information.....338
- Normal (Fixed Speed) Cruise Control Mode 339

■ PARKSENSE REAR PARK ASSIST — IF EQUIPPED.....342
- ParkSense Sensors 342
- ParkSense Warning Display 342
- ParkSense Display 342
- Enabling And Disabling ParkSense 345
- Service The ParkSense Rear Park Assist System.....346
- Cleaning The ParkSense System 346
- ParkSense System Usage Precautions 347

■ PARKSENSE FRONT AND REAR PARK ASSIST — IF EQUIPPED.....348
- ParkSense Sensors 348
- ParkSense Warning Display 349
- ParkSense Display 349
- Enabling And Disabling ParkSense 353
- Service The ParkSense Park Assist System.....353
- Cleaning The ParkSense System 354
- ParkSense System Usage Precautions 354

■ PARKVIEW REAR BACK UP CAMERA 356

■ TRAILCAM SYSTEM — IF EQUIPPED.....358

■ REFUELING THE VEHICLE 360
- Fuel Filler Cap 360
- Loose Fuel Filler Cap Message 361

■ VEHICLE LOADING.....362
- Certification Label 362

■ TRAILER TOWING 363
- Common Towing Definitions 364
- Trailer Hitch Classification.....366
- Trailer Towing Weights (Maximum Trailer Weight Ratings) 366
- Trailer And Tongue Weight 369
- Towing Tips.....371

■ RECREATIONAL TOWING (BEHIND MOTORHOME, ETC.).....373
- Towing This Vehicle Behind Another Vehicle 373
- Recreational Towing — Four-Wheel Drive Models 373

■ DRIVING TIPS.....376
- On-Road Driving Tips.....376
- Off-Road Driving Tips 377

IN CASE OF EMERGENCY

- HAZARD WARNING FLASHERS 388
- ASSIST AND SOS SYSTEM — IF EQUIPPED 388
  - General Information 393
- BULB REPLACEMENT 394
  - Replacement Bulbs 394
  - Bulb Replacement 396
- FUSES 399
  - General Information 399
  - Power Distribution Center (PDC) 400
- JACKING AND TIRE CHANGING 409
  - Jack Location 409
  - Spare Tire Removal 412
  - Preparations For Jacking 415
  - Jacking Instructions 416
  - To Stow The Flat Or Spare 420
  - Reinstalling The Jack And Tools 422
- JUMP STARTING 423
  - Preparations For Jump Start 423
  - Jump Starting Procedure 426
- IF YOUR ENGINE OVERHEATS 428
- MANUAL PARK RELEASE 429
- FREEING A STUCK VEHICLE 430
- TOWING A DISABLED VEHICLE 432
  - Four–Wheel Drive Models 433
  - Emergency Tow Hooks — If Equipped 434
- ENHANCED ACCIDENT RESPONSE SYSTEM (EARS) 435
- EVENT DATA RECORDER (EDR) 435

SERVICING AND MAINTENANCE

- SCHEDULED SERVICING 436
  - Maintenance Plan 437
  - Heavy Duty Use Of The Vehicle 440
- ENGINE COMPARTMENT 441
  - 3.6L Engine 441
  - Checking Oil Level 442
  - Adding Washer Fluid 442
  - Maintenance-Free Battery 442
  - Pressure Washing 444

- DEALER SERVICE 444
  - Engine Oil 444
  - Engine Oil Filter 446
  - Engine Air Cleaner Filter 446
  - Accessory Drive Belt Inspection 448
  - Air Conditioner Maintenance 449
  - Body Lubrication 453
  - Windshield Wiper Blades 453
  - Exhaust System 456
  - Cooling System 457
  - Brake System 462
  - Front/Rear Axle Fluid 463
  - Transfer Case 464
  - Manual Transmission — If Equipped 464
  - Automatic Transmission — If Equipped 465
- RAISING THE VEHICLE 466
- TIRES 466
  - Tire Safety Information 466
  - Tires — General Information 476
  - Tire Types 482
  - Spare Tires — If Equipped 483
  - Wheel And Wheel Trim Care 485
  - Tire Chains (Traction Devices) 486
  - Tire Rotation Recommendations 487
- DEPARTMENT OF TRANSPORTATION UNIFORM TIRE QUALITY GRADES 488
  - Treadwear 488
  - Traction Grades 489
  - Temperature Grades 489
- STORING THE VEHICLE 489
- BODYWORK 491
  - Protection From Atmospheric Agents 491
  - Body And Underbody Maintenance 491
  - Preserving The Bodywork 492
- INTERIORS 495
  - Carpet Removal 495
  - Seats And Fabric Parts 498
  - Plastic And Coated Parts 498
  - Leather Parts 499
  - Glass Surfaces 499

TECHNICAL SPECIFICATIONS

- VEHICLE IDENTIFICATION NUMBER 500
- BRAKE SYSTEM 501
- WHEEL AND TIRE TORQUE SPECIFICATIONS 501
  - Torque Specifications 501

- FUEL REQUIREMENTS 503
  - 3.6L Engine 503
  - Reformulated Gasoline 503
  - Materials Added To Fuel 503
  - Gasoline/Oxygenate Blends 504
  - Do Not Use E-85 In Non-Flex Fuel Vehicles 504
  - CNG And LP Fuel System Modifications 505
  - MMT In Gasoline 505
  - Fuel System Cautions 505
  - Carbon Monoxide Warnings 506
- FLUID CAPACITIES 507
- FLUIDS AND LUBRICANTS 507
  - Engine 507
  - Chassis 509

MULTIMEDIA

- UCONNECT SYSTEMS 510
- CYBERSECURITY 510
- UCONNECT SETTINGS 511
  - Customer Programmable Features — Uconnect 3 Settings 512
  - Customer Programmable Features — Uconnect 4 Settings 525
  - Customer Programmable Features — Uconnect 4C/4C NAV Settings 538
- SAFETY AND GENERAL INFORMATION 553
  - Safety Guidelines 553
- UCONNECT 3 WITH 5-INCH DISPLAY 554
  - Introduction 554
  - Radio Mode 556
  - Media Mode 560
  - Phone Mode 563
- UCONNECT 4 WITH 7-INCH DISPLAY 572
  - Introduction 572
  - Radio Mode 574
  - Media Mode 587
  - Phone Mode 599
- OFF-ROAD PAGES — IF EQUIPPED 615
  - Off-Road Pages Status Bar 616
  - Pitch & Roll 617
  - Drivetrain 617
  - Accessory Gauge 618
- STEERING WHEEL AUDIO CONTROLS 619
  - Radio Operation 619
  - Media Mode 619
- AUX/USB/MP3 CONTROL 620
- RADIO OPERATION AND MOBILE PHONES 623
  - Regulatory And Safety Information 623

- UCONNECT VOICE RECOGNITION QUICK TIPS...625
  - Introducing Uconnect 625
  - Get Started 626
  - Basic Voice Commands 627
  - Radio 628
  - Media....629
  - Phone....631
  - Voice Text Reply 632
  - Climate 633
  - Navigation (4C NAV) — If Equipped 635
  - SiriusXM Guardian™ (4C/4C NAV) — If Equipped 636
  - Register (4C/4C NAV) 636
  - Vehicle Health Report/Alert (4C/4C NAV) 637
  - Mobile App (4C/4C NAV)....637
  - SiriusXM® Travel Link (4C NAV) 638
  - Siri® Eyes Free 639
  - Using Do Not Disturb 640
  - Android Auto™ — If Equipped 641
  - Apple CarPlay® — If Equipped 642
  - General Information....644
  - Additional Information 644

CUSTOMER ASSISTANCE

- SUGGESTIONS FOR OBTAINING SERVICE FOR YOUR VEHICLE 646
  - Prepare For The Appointment....646
  - Prepare A List....646
  - Be Reasonable With Requests 646
- IF YOU NEED ASSISTANCE 646
  - FCA US LLC Customer Center....647
  - FCA Canada Inc. Customer Center....647
  - In Mexico Contact....647
  - Puerto Rico And U.S. Virgin Islands 647
  - Customer Assistance For The Hearing Or Speech Impaired (TDD/TTY) 648
  - Service Contract 648
- WARRANTY INFORMATION 649
- MOPAR PARTS....649
- REPORTING SAFETY DEFECTS 649
  - In The 50 United States And Washington, D.C.....649
  - In Canada 650
- PUBLICATION ORDER FORMS 650

INTRODUCTION

INTRODUCTION

Dear Customer, congratulations on selecting your new vehicle. Be assured that it represents precision workmanship, distinctive styling, and high quality.

This is a specialized utility vehicle. It can go places and perform tasks that are not intended for conventional passenger vehicles. It handles and maneuvers differently from many passenger vehicles, both on-road and off-road, so take time to become familiar with your vehicle. If equipped, the two-wheel drive version of this vehicle is designed for on-road use only. It is not intended for off-road driving or use in other severe conditions suited for a four-wheel drive vehicle. Before you start to operate this vehicle, read the Owner's Manual. Be sure you are familiar with all vehicle controls, particularly those used for braking, steering, transmission, and transfer case operation. Learn how your vehicle handles on different road surfaces. Your driving skills will improve with experience. When driving off-road, or operating the vehicle, don't overload the vehicle or expect the vehicle to overcome the natural laws of physics. Always observe federal, state, provincial and local laws wherever you drive. As with other vehicles of this type, failure to operate this vehicle correctly may result in loss of control or a collision. Refer to the "Driving Tips" in "Starting and Operating" for further information.

This Owner's Manual has been prepared with the assistance of service and engineering specialists to acquaint you with the operation and maintenance of your vehicle. It is supplemented by Warranty Information, and customer-oriented documents located online. Within this information, you will find a description of the services that FCA US LLC offers to its customers, the vehicle's warranty coverage, and the details of the terms and conditions for maintaining its validity. Please take the time to read all of these publications carefully before driving your vehicle for the first time. Following the instructions, recommendations, tips, and important warnings in this manual will help assure safe and enjoyable operation of your vehicle.

This Owner's Manual describes all versions of this vehicle. Options and equipment dedicated to specific markets or versions are not expressly indicated in the text. Therefore, you should only consider the information which is related to

the trim level, engine, and version that you have purchased. Any content introduced throughout the Owner's Information that may or may not be applicable to your vehicle will be identified with the wording "If Equipped". All data contained in this publication are intended to help you use your vehicle in the best possible way. FCA US LLC aims towards a constant improvement of the vehicles produced. For this reason, it reserves the right to make changes to the model described for technical and/or commercial reasons. For further information, contact an authorized dealer.

When it comes to service, remember that an authorized dealer knows your vehicle best, has factory-trained technicians and genuine MOPAR® parts, and cares about your satisfaction.

HOW TO USE THIS MANUAL

Essential Information

Consult the Table of Contents at the front of this Owner's Manual to determine which section contains the information you desire.

Since the specification of your vehicle depends on the items of equipment ordered, certain descriptions and illustrations may differ from your vehicle's equipment.

The detailed index at the back of this Owner's Manual contains a complete listing of all subjects.

Symbols

Some vehicle components have colored labels whose symbols indicate precautions to be observed when using this component. Refer to "Warning Lights and Messages" in "Getting To Know Your Instrument Panel" for further information on the symbols used in your vehicle.

ROLLOVER WARNING

Utility vehicles have a significantly higher rollover rate than other types of vehicles. This vehicle has a higher ground clearance and a higher center of gravity than many passenger vehicles. It is capable of performing better in a wide variety of off-road applications. Driven in an unsafe manner, all vehicles can go out of control. Because of the higher center of gravity, if this vehicle is out of control it may roll over while some other vehicles may not.

Do not attempt sharp turns, abrupt maneuvers, or other unsafe driving actions that can cause loss of vehicle control. Failure to operate this vehicle safely may result in a collision, rollover of the vehicle, and severe or fatal injury. Drive carefully.

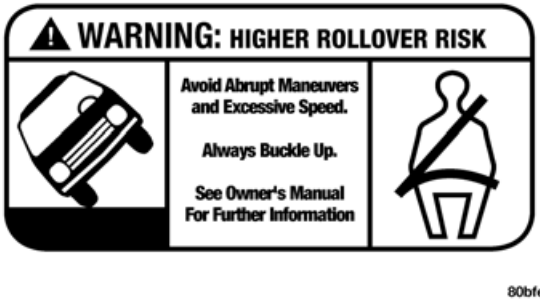

Rollover Warning Label

Failure to use the driver and passenger seat belts provided is a major cause of severe or fatal injury. In fact, the US government notes that the universal use of existing seat belts could cut the highway death toll by 10,000 or more each year and could reduce disabling injuries by two million annually. In a rollover crash, an unbelted person is significantly more likely to die than a person wearing a seat belt. Always buckle up.

CAMPERS

This vehicle is NOT recommended for slide-in camper applications.

WARNINGS AND CAUTIONS

This Owner's Manual contains **WARNINGS** against operating procedures that could result in a collision, bodily injury, and/or death. It also contains **CAUTIONS** against procedures that could result in damage to your vehicle. If you do not read this entire Owner's Manual, you may miss important information. Observe all Warnings and Cautions.

VEHICLE MODIFICATIONS/ALTERATIONS

WARNING!
Any modifications or alterations to this vehicle could seriously affect its roadworthiness and safety and may lead to a collision resulting in serious injury or death.

GETTING TO KNOW YOUR VEHICLE

VEHICLE USER GUIDE — IF EQUIPPED

Access your Owner's Information right through your Uconnect 4C or 4C NAV touchscreen system (if equipped).

To access the Vehicle User Guide on your Uconnect touchscreen, press the Uconnect **Apps** button. From there, press the **Vehicle User Guide** icon on your touchscreen. No Uconnect registration is required.

Uconnect 4C NAV With 8.4–inch Display Vehicle User Guide Touchscreen Icon

NOTE:
Vehicle User Guide features are not available while the vehicle is moving. If you try to access the features while the vehicle is in motion, the system will display: "Feature not available while the vehicle is in motion".

Pre-Installed Features

- Your User Guide — Updated in real-time
- Touchscreen convenience
- Maintenance schedules and information
- Comprehensive icon & symbol glossary
- Available when and where you need it
- Customizable interface
- Multilingual

Once you launch your Vehicle User Guide, you will be able to explore your warranty information and radio manual when and where you need them. Your Uconnect system displays the Vehicle User Guide on your touchscreen radio to assist in better understanding your vehicle. There's no app to download, no phone to connect and no external device needed for playback. Plus, it's updated throughout the year, in real-time, so it never goes out of date.

Features/Benefits

- Pre-installed on your Uconnect touchscreen radio
- Enhanced search and browsing capability
- Robust NAV application (if equipped)
- Add selected topics to a fast-access Favorites category
- Icon and symbol glossary
- Crucial driver information and assistance:
  - Operating Instructions
  - Warranty Information
  - Fluid Level Standards
  - Maintenance Schedules
  - Emergency Procedures
  - 911 Contact and More

NOTE:
Topics can be added to your "Favorites" for easy access in the future. Refer to "Multimedia" for more information.

KEYS

Key Fob

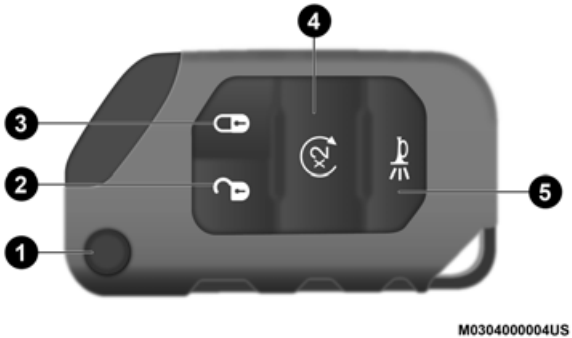

Key Fob

1 — Flip Key Release Button
2 — Unlock Button
3 — Lock Button
4 — Remote Start Button
5 — Panic Button

Your vehicle uses a keyless ignition system. The ignition system consists of a key fob with Keyless Enter-N-Go and a START/STOP Ignition Button. The Remote Keyless Entry (RKE) system consists of a key fob with a mechanical key and Keyless Enter-N-Go feature.

NOTE:
The key fob may not be detected by the vehicle if it is located next to a mobile phone, laptop or other electronic device; these devices may block the key fob's wireless signal.

WARNING!
Push the Mechanical Key Release button only with the key fob facing away from your body, especially your eyes and objects that may be damaged, such as clothing.

CAUTION!
The electrical components inside of the key fob may be damaged if the key fob is subjected to strong electrical shocks. In order to ensure complete efficiency of the electronic devices inside of the key fob, avoid exposing the key fob to direct sunlight.

The key fob allows you to lock or unlock the doors and tailgate from distances up to approximately 66 ft (20 m) by pressing the appropriate button on the fob. The key fob does not need to be pointed at the vehicle to activate the system.

NOTE:
With the ignition in ON/RUN position and with the vehicle doors open, the lock button will be disabled, and only the unlock button will be enabled. All RKE commands will be disabled once the vehicle begins moving at 2 mph (4 km/h) or above.

To Unlock The Doors And Tailgate

Push and release the key fob unlock button once to unlock the driver's door only, or twice to unlock all the doors and tailgate. This setting is adjustable through the Uconnect Settings. When the key fob unlock button is pushed, the Illuminated Entry will initiate, and the turn signal lights will flash twice.

NOTE:
The mechanical flip key can be used to lock or unlock the door cylinders, tailgate, glove compartment, storage compartments (if equipped), and rear seatbacks.

To Lock The Doors And Tailgate

Push and release the lock button on the key fob to lock all doors. The turn signals will flash, and the horn will chirp once to acknowledge the lock signal.

Flash Lights With Remote Lock

The turn signal lights will flash to acknowledge the lock signal.

Sound Horn With Remote Key Lock

This feature will cause the horn to chirp when the doors are locked with the key fob. This feature can be turned on or off. Refer to “Uconnect Settings” in “Multimedia” for further information.

NOTE:
Pushing the lock button on the key fob while you are in the vehicle will activate the Vehicle Security Alarm system. Opening a door with the Vehicle Security Alarm system activated will cause the alarm to sound. Push the unlock button to deactivate the Vehicle Security Alarm system.

Using The Panic Alarm

To turn the Panic Alarm feature on or off, push the panic button on the key fob. When the Panic Alarm is activated, the turn signals will flash, the horn will pulse on and off, and the interior lights will turn on.

The Panic Alarm will stay on for three minutes unless you turn it off by either pushing the panic button a second time or drive the vehicle at a speed of 2 mph (4 km/h) or greater.

NOTE:

- The interior lights will turn off if you place the ignition in the ACC or ON/RUN position while the Panic Alarm is activated. However, the exterior lights and horn will remain on.
- You may need to be less than 35 ft (11 m) from the vehicle when using the key fob to turn off the Panic Alarm due to the radio frequency noises emitted by the system.

Key Fob Battery Replacement

NOTE:
When a key fob battery is low, a warning will be indicated on the vehicle's instrument cluster, and the fob LED will no longer illuminate with a button push.

The recommended replacement battery is CR2450.

NOTE:
Perchlorate Material – special handling may apply. See www.dtsc.ca.gov/hazardouswaste/perchlorate for further information.

1. Remove the back cover of the key fob by inserting a flat-blade screw driver into the slot on the bottom of the fob. Apply light pressure until the cover unsnaps being careful not to damage the seal. Proceed counter-clockwise (in the order shown below) to loosen the remaining snaps until the battery cover can be removed.

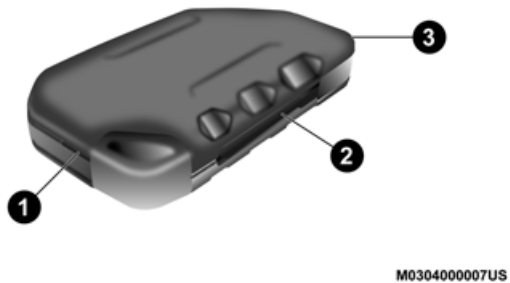

1-3 – Back Cover Pry Points

2. Remove the depleted battery by inserting a small flat-blade screwdriver into the battery removal slot and sliding the battery forward and upward being careful not to damage the electronic board underneath.

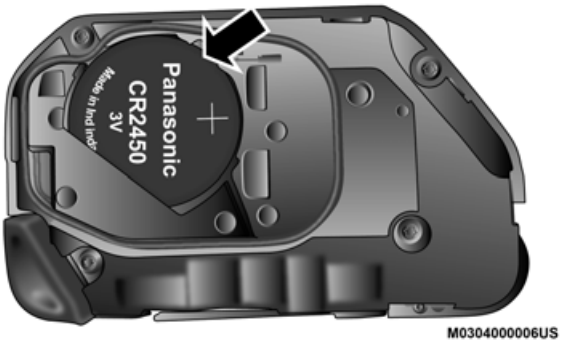

Battery Replacement

3. Install the new battery into the key fob, making sure the positive (+) side is facing up. Slide the battery until it is seated securely below the tabs.

4. Reassemble the back cover making sure it is properly aligned before snapping it back in place.

Programming Additional Key Fobs

Programming the key fob may be performed by an authorized dealer.

NOTE:
Once a key fob is programmed to a vehicle, it cannot be repurposed and reprogrammed to another vehicle.

Request For Additional Key Fobs

NOTE:
Only key fobs that are programmed to the vehicle electronics can be used to start and operate the vehicle. Once a key fob is programmed to a vehicle, it cannot be programmed to any other vehicle.

WARNING!
• **Always remove the key fobs from the vehicle and lock all doors when leaving the vehicle unattended.** • **Always remember to place the ignition in the OFF mode.**

Duplication of key fobs may be performed at an authorized dealer. This procedure consists of programming a blank key fob to the vehicle electronics. A blank key fob is one that has never been programmed.

NOTE:

- When having the Sentry Key Immobilizer System serviced, bring all vehicle keys with you to an authorized dealer.
- Keys must be ordered to the correct key cut to match the vehicle locks.

General Information

The following regulatory statement applies to all Radio Frequency (RF) devices equipped in this vehicle:

This device complies with Part 15 of the FCC Rules and with Innovation, Science and Economic Development Canada license-exempt RSS standard(s). Operation is subject to the following two conditions:

1. This device may not cause harmful interference, and
2. This device must accept any interference received, including interference that may cause undesired operation.

Le présent appareil est conforme aux CNR d`Innovation, Science and Economic Development applicables aux appareils radio exempts de licence. L'exploitation est autorisée aux deux conditions suivantes:

1. l'appareil ne doit pas produire de brouillage, et
2. l'utilisateur de l'appareil doit accepter tout brouillage radioélectrique subi, même si le brouillage est susceptible d'en compromettre le fonctionnement.

La operación de este equipo está sujeta a las siguientes dos condiciones:

1. es posible que este equipo o dispositivo no cause interferencia perjudicial y
2. este equipo o dispositivo debe aceptar cualquier interferencia, incluyendo la que pueda causar su operación no deseada.

NOTE:
Changes or modifications not expressly approved by the party responsible for compliance could void the user’s authority to operate the equipment.

IGNITION SWITCH

Keyless Enter-N-Go — Ignition

This feature allows the driver to operate the ignition switch with the push of a START/STOP Ignition Button as long as the key fob is in the passenger compartment.

The START/STOP Ignition Button has several operating modes that are labeled and will illuminate when in position. These modes are OFF, ACC, RUN, and START.

NOTE:
In case the ignition switch does not change with the push of the START/STOP Ignition Button, the key fob may have a low or depleted battery. In this situation, a back up method can be used to operate the ignition switch. Put the nose side of the key fob (side with the mechanical flip key) against the START/STOP Ignition Button and push to operate the ignition switch.

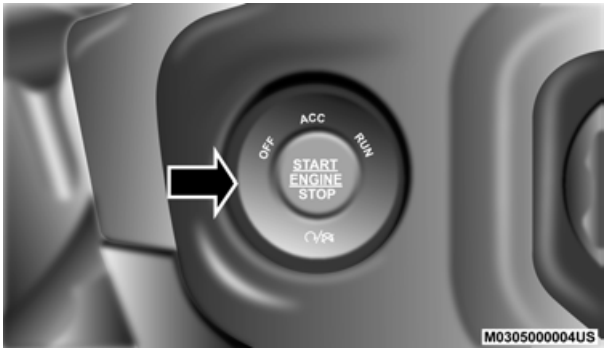

START/STOP Ignition Button

The push button ignition can be placed in the following modes:

OFF

- The engine is stopped.
- Some electrical devices (e.g. automatic locking, alarm, etc.) are available.

ACC

- Engine is not started.
- Some electrical devices are available.

RUN

- Driving position.
- All electrical devices are available.

START

- The engine will start.

WARNING!

- **When exiting the vehicle, always remove the key fob from the vehicle and lock your vehicle.**
- **Never leave children alone in a vehicle, or with access to an unlocked vehicle.**
- **Allowing children to be in a vehicle unattended is dangerous for a number of reasons. A child or others could be seriously or fatally injured. Children should be warned not to touch the parking brake, brake pedal or the gear selector.**
- **Do not leave the key fob in or near the vehicle, or in a location accessible to children, and do not leave the ignition of a vehicle equipped with Keyless Enter-N-Go in the ON/RUN mode. A child could operate power windows, other controls, or move the vehicle.**

(Continued)

WARNING! *(Continued)*

- **Do not leave children or animals inside parked vehicles in hot weather. Interior heat build-up may cause serious injury or death.**

CAUTION!

An unlocked vehicle is an invitation for thieves. Always remove key fob from the vehicle and lock all doors when leaving the vehicle unattended.

NOTE:
Refer to "Starting The Engine" in "Starting And Operating" for further information.

Vehicle On Message

When opening the driver's door when the ignition is in the ON/RUN mode (engine not running), a chime will sound to remind you to place the ignition in the OFF mode. In addition to the chime, the message will display “Ignition Or Accessory On” in the instrument cluster display.

NOTE:
The power window switches will remain active up to ten minutes after the ignition is placed in the OFF position. Opening either front door will cancel this feature. The time for this feature is programmable.

WARNING!

- **Before exiting a vehicle, always come to a complete stop, then shift the automatic transmission into PARK, apply the parking brake, place the engine in the OFF position, and remove the key fob from the vehicle and lock your vehicle. If equipped with Keyless Enter-N-Go, always make sure the keyless ignition is in the OFF position, remove the key fob from the vehicle and lock the vehicle.**
- **Never leave children alone in a vehicle, or with access to an unlocked vehicle.**
- **Allowing children to be in a vehicle unattended is dangerous for a number of reasons. A child or others could be seriously or fatally injured. Children should be warned not to touch the parking brake, brake pedal or the gear selector.**

(Continued)

WARNING! *(Continued)*

- **Do not leave the key fob in or near the vehicle, or in a location accessible to children, and do not leave the ignition of a vehicle equipped with Keyless Enter-N-Go in the ON/RUN mode. A child could operate power windows, other controls, or move the vehicle.**
- **Do not leave children or animals inside parked vehicles in hot weather. Interior heat build-up may cause serious injury or death.**

CAUTION!

An unlocked vehicle is an invitation for thieves. Always remove key fob from the vehicle and lock all doors when leaving the vehicle unattended.

Depleted Key Fob Battery

In case the ignition switch does not change with the push of a button, the key fob may have a low or fully depleted battery. A low key fob battery can be verified by referring to the instrument cluster, which will display directions to follow.

NOTE:
A low key fob battery condition may be indicated by a message in the instrument cluster display, or by the LED light on the key fob. If the LED key fob light no longer illuminates from key fob button pushes, then the key fob battery requires replacement.

In this situation, a back up method can be used to operate the ignition switch. Put the nose side of the key fob against the START/STOP Ignition Button and push to operate the ignition switch.

Backup Starting Method

REMOTE STARTING SYSTEM — IF EQUIPPED

This system uses the key fob to start the engine conveniently from outside the vehicle while still maintaining security. The system has a range of 328 ft (100 m).

The Remote Starting System also activates the Climate Control System, heated seats (if equipped), and heated steering wheel (if equipped) in temperatures below 40°F (4.4°C). Refer to those sections in “Getting To Know Your Vehicle” for further information.

NOTE:

- The vehicle must be equipped with an automatic transmission to be equipped with Remote Start.
- Obstructions between the vehicle and key fob may reduce this range.

How To Use Remote Start

- Push the Remote Start button on the key fob twice within five seconds. Pushing the Remote Start button a third time shuts the engine OFF.
- To drive the vehicle, push the unlock button, and place the ignition in the ON/RUN position.
- With remote start, the engine will only run for 15 minutes (timeout) unless the ignition key is placed in the ON/RUN position.
- The vehicle must be started with the key after two consecutive timeouts.

All of the following conditions must be met before the engine will remote start:

- Gear selector in PARK
- Doors closed
- Hood closed
- Hazard switch off
- Brake switch inactive (brake pedal not pushed)
- Battery at an acceptable charge level
- Panic button not pushed
- System not disabled from previous remote start event
- Vehicle alarm system indicator flashing
- Ignition in STOP/OFF position
- Fuel level meets minimum requirement
- All removable doors must not be removed
- Malfunction indicator light not illuminated

WARNING!

- **Do not start or run an engine in a closed garage or confined area. Exhaust gas contains Carbon Monoxide (CO) which is odorless and colorless. Carbon Monoxide is poisonous and can cause serious injury or death when inhaled.**
- **Keep key fobs away from children. Operation of the Remote Start System, windows, door locks or other controls could cause serious injury or death.**

Remote Start Cancel Message — If Equipped

The following messages will display in the instrument cluster if the vehicle fails to remote start or exits remote start prematurely:

- Remote Start Cancelled — Door Open
- Remote Start Cancelled — Hood Open
- Remote Start Cancelled — Fuel Low
- Remote Start Cancelled — Time Expired
- Remote Start Disabled — Start Vehicle To Reset

The message will stay active until the ignition is placed in the ON/RUN position.

To Enter Remote Start Mode

Push and release the Remote Start button on the key fob twice within five seconds. The vehicle doors will lock, the turn signals will flash twice, and the horn will chirp twice. Then the engine will start, and the vehicle will remain in the Remote Start mode for a 15-minute cycle.

NOTE:

- If an engine fault is present or fuel level is low, the vehicle will start and then shut down in 10 seconds.
- The park lamps will turn on and remain on during Remote Start mode.
- For security, power window operation is disabled when the vehicle is in the Remote Start mode.
- The engine can be started two consecutive times (two 15-minute cycles) with the key fob. However, the ignition must be placed in the ON/RUN position before you can repeat the start sequence for a third cycle.

To Exit Remote Start Mode Without Driving The Vehicle

Push and release the Remote Start button one time or allow the remote start cycle to complete the entire 15-minute cycle.

NOTE:
To avoid unintentional shutdowns, the system will disable the one time push of the Remote Start button for two seconds after receiving a valid Remote Start request.

To Exit Remote Start Mode And Drive The Vehicle

Before the end of 15-minute cycle, push and release the unlock button on the key fob to unlock the doors, or unlock the vehicle using Keyless Enter-N-Go — Passive Entry via the door handles, and disarm the Vehicle Security Alarm (if equipped). Then, prior to the end of the 15-minute cycle, push and release the START/STOP Ignition Button.

NOTE:
For vehicles equipped with the Keyless Enter-N-Go — Passive Entry feature, the message "Remote Start Active — Push Start Button" will display in the instrument cluster display until you push the START/STOP Ignition Button.

Remote Start Comfort Systems — If Equipped

When Remote Start is activated, the Climate Controls may activate the heated seats (if equipped) and heated steering wheel (if equipped) in temperatures below 40°F (4.4°C). These features will stay on through the duration of Remote Start or until the ignition switch is cycled to the ON/RUN position.

General Information

The following regulatory statement applies to all Radio Frequency (RF) devices equipped in this vehicle:

This device complies with Part 15 of the FCC Rules and with Innovation, Science and Economic Development Canada license-exempt RSS standard(s). Operation is subject to the following two conditions:

1. This device may not cause harmful interference, and
2. This device must accept any interference received, including interference that may cause undesired operation.

Le présent appareil est conforme aux CNR d`Innovation, Science and Economic Development applicables aux appareils radio exempts de licence. L'exploitation est autorisée aux deux conditions suivantes:

1. l'appareil ne doit pas produire de brouillage, et
2. l'utilisateur de l'appareil doit accepter tout brouillage radioélectrique subi, même si le brouillage est susceptible d'en compromettre le fonctionnement.

La operación de este equipo está sujeta a las siguientes dos condiciones:

1. es posible que este equipo o dispositivo no cause interferencia perjudicial y
2. este equipo o dispositivo debe aceptar cualquier interferencia, incluyendo la que pueda causar su operación no deseada.

NOTE:
Changes or modifications not expressly approved by the party responsible for compliance could void the user's authority to operate the equipment.

SENTRY KEY

The Sentry Key Immobilizer System prevents unauthorized vehicle operation by disabling the engine. The system does not need to be armed or activated. Operation is automatic, regardless of whether the vehicle is locked or unlocked.

The system uses a key fob, keyless push button ignition and a Radio Frequency (RF) receiver to prevent unauthorized vehicle operation. Therefore, only key fobs that are programmed to the vehicle can be used to start and operate the vehicle. The system cannot reprogram a key fob obtained from another vehicle.

After switching the ignition switch to the ON/RUN position, the vehicle security light will turn on for three seconds for a bulb check. If the light remains on after the bulb check, it indicates that there is a problem with the electronics. In addition, if the light begins to flash after the bulb check, it indicates that someone attempted to start the engine with an invalid key fob. In the event that a valid key fob is used to start the engine but there is an issue with the vehicle electronics, the engine will start and shut off after two seconds.

If the vehicle security light turns on during normal vehicle operation (vehicle running for longer than ten seconds), it indicates that there is a fault in the electronics. Should this occur, have the vehicle serviced as soon as possible by an authorized dealer.

CAUTION!
The Sentry Key Immobilizer System is not compatible with some aftermarket remote starting systems. Use of these systems may result in vehicle starting problems and loss of security protection.

All of the key fobs provided with your new vehicle have been programmed to the vehicle electronics.

Customer Key Programming

Programming key fobs may be performed at an authorized dealer.

Replacement Keys

NOTE:
Only key fobs that are programmed to the vehicle electronics can be used to start and operate the vehicle. Once a key fob is programmed to a vehicle, it cannot be programmed to any other vehicle.

CAUTION!
• **Always remove the key fobs from the vehicle and lock all doors when leaving the vehicle unattended to prevent theft and/or damage.** • **Always remember to cycle the ignition to OFF to prevent battery drainage.**

NOTE:
Duplication of key fobs may be performed at an authorized dealer. This procedure consists of programming a blank key fob to the vehicle electronics. A blank key fob is one that has never been programmed.

When having the Sentry Key Immobilizer System serviced, bring all vehicle keys with you to an authorized dealer.

General Information

The following regulatory statement applies to all Radio Frequency (RF) devices equipped in this vehicle:

This device complies with Part 15 of the FCC Rules and with Innovation, Science and Economic Development Canada license-exempt RSS standard(s). Operation is subject to the following two conditions:

1. This device may not cause harmful interference, and
2. This device must accept any interference received, including interference that may cause undesired operation.

Le présent appareil est conforme aux CNR d`Innovation, Science and Economic Development applicables aux appareils radio exempts de licence. L'exploitation est autorisée aux deux conditions suivantes:

1. l'appareil ne doit pas produire de brouillage, et
2. l'utilisateur de l'appareil doit accepter tout brouillage radioélectrique subi, même si le brouillage est susceptible d'en compromettre le fonctionnement.

La operación de este equipo está sujeta a las siguientes dos condiciones:

1. es posible que este equipo o dispositivo no cause interferencia perjudicial y
2. este equipo o dispositivo debe aceptar cualquier interferencia, incluyendo la que pueda causar su operación no deseada.

NOTE:
Changes or modifications not expressly approved by the party responsible for compliance could void the user's authority to operate the equipment.

VEHICLE SECURITY ALARM — IF EQUIPPED

The Vehicle Security Alarm monitors the vehicle doors for unauthorized entry and the ignition switch for unauthorized operation. When the alarm is activated, the interior switches for door locks are disabled. The Vehicle Security Alarm provides both audible and visible signals. If something triggers the alarm, the Vehicle Security Alarm will provide the following audible and visible signals: the horn will pulse, the park lamps and/or turn signals will flash, and the vehicle security light in the instrument cluster will flash.

To Arm The System

Follow these steps to arm the Vehicle Security Alarm:

1. Make sure the vehicle's ignition is cycled to the OFF position. Refer to "Starting The Engine" in "Starting And Operating" for further information.
2. Perform one of the following methods to lock the vehicle:
   - Push the lock button on the interior power door lock switch with the driver and/or passenger door open.
   - Push the lock button on the exterior Passive Entry door handle with a valid key fob available in the same exterior zone. Refer to "Keyless Enter-N-Go — Passive Entry" in "Getting To Know Your Vehicle" for further information.
   - Push the lock button on the key fob.
3. If any doors are open, close them.

NOTE:
The Vehicle Security Alarm will not arm if you lock the doors using the manual door lock.

To Disarm The System

The Vehicle Security Alarm can be disarmed using any of the following methods:

- Push the unlock button on the key fob.
- Grasp the Passive Entry Unlock door handle (if equipped). Refer to "Keyless Enter-N-Go — Passive Entry" in "Getting To Know Your Vehicle" for further information.
- Cycle the vehicle ignition system out of the OFF position.

NOTE:

- The driver's door key cylinder cannot arm or disarm the Vehicle Security Alarm.
- When the Vehicle Security Alarm is armed, the interior power door lock switches will not unlock the doors.

The Vehicle Security Alarm is designed to protect your vehicle. However, you can create conditions where the system will give you a false alarm. If one of the previously described arming sequences has occurred, the Vehicle Security Alarm will arm regardless of whether you are in the vehicle or not. If you remain in the vehicle and open a door, the alarm will sound. If this occurs, disarm the Vehicle Security Alarm.

If the Vehicle Security Alarm is armed and the battery becomes disconnected, the Vehicle Security Alarm will remain armed when the battery is reconnected; the exterior lights will flash, and the horn will sound. If this occurs, disarm the Vehicle Security Alarm.

Rearming Of The System

If something triggers the alarm, and no action is taken to disarm it, the Vehicle Security Alarm will turn the horn off after 29 seconds, 5 seconds between cycles, up to 8 cycles if the trigger remains active and then the Vehicle Security Alarm will rearm itself.

DOORS

CAUTION!
Careless handling and storage of the removable door panels may damage the seals, causing water to leak into the vehicle's interior.

Manual Door Locks

All doors are equipped with an interior rocker-type door lock lever. To lock a door when leaving your vehicle, push the rocker lever forward to the lock position and close the door. To unlock the door, push the rocker lever rearward.

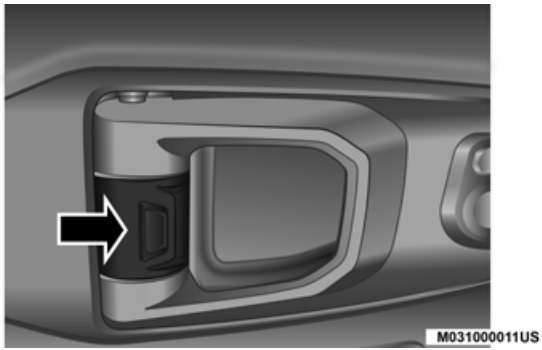

Manual Door Lock

NOTE:
The mechanical flip key can be used to lock or unlock the door cylinders, tailgate, glove compartment, and storage compartments.

WARNING!

- **For personal security reasons and safety in a collision, lock the vehicle doors when you drive, as well as when you park and exit the vehicle.**
- **When exiting the vehicle, always place the ignition in the OFF position and remove the key from the vehicle. Unsupervised use of vehicle equipment may cause severe personal injuries and death.**
- **Never leave children alone in a vehicle, or with access to an unlocked vehicle.**
- **Allowing children to be in a vehicle unattended is dangerous for a number of reasons. A child or others could be seriously or fatally injured. Children should be warned not to touch the parking brake, brake pedal or the gear selector.**
- **Do not leave the key fob in or near the vehicle or in a location accessible to children. A child could operate power windows, other controls, or move the vehicle.**

Power Door Locks — If Equipped

The power door lock switch is located on each front door panel. Push the switch forward to lock the doors, and rearward to unlock the doors.

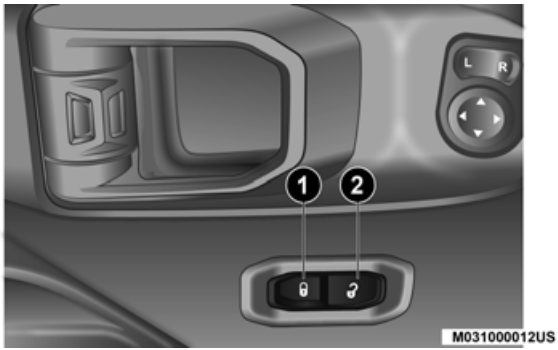

Power Door Lock Switch

1 — Lock Button
2 — Unlock Button

WARNING!

- **For personal security reasons and safety in a collision, lock the vehicle doors when you drive, as well as when you park and exit the vehicle.**
- **When exiting the vehicle, always place the ignition in the OFF position and remove the key from the vehicle. Unsupervised use of vehicle equipment may cause severe personal injuries and death.**
- **Never leave children alone in a vehicle, or with access to an unlocked vehicle.**
- **Allowing children to be in a vehicle unattended is dangerous for a number of reasons. A child or others could be seriously or fatally injured. Children should be warned not to touch the parking brake, brake pedal or the gear selector.**
- **Do not leave the key fob in or near the vehicle or in a location accessible to children. A child could operate power windows, other controls, or move the vehicle.**

Keyless Enter-N-Go — Passive Entry (If Equipped)

The Passive Entry system is a feature that allows you to lock and unlock the vehicle's door(s) without having to push the key fob lock or unlock buttons.

NOTE:

- Passive Entry may be programmed ON/OFF; refer to "Uconnect Settings" in "Multimedia" for further information.
- The key fob may not be detected by the vehicle Passive Entry system if it is located next to a mobile phone, laptop, or other electronic device; these devices may interfere with the key fob's wireless signal and prevent the Passive Entry system from locking/unlocking the vehicle.
- Passive Entry Unlock initiates illuminated approach (Low Beams, License Plate Lamp, Position Lamps) for whichever time duration is set between 0, 30 (default), 60 or 90 seconds. Passive Entry Unlock also initiates two flashes of the turn signal lamps.
- If wearing gloves on your hands, or if it has been raining/snowing on the Passive Entry door handle, the unlock sensitivity can be affected, resulting in a slower response time.
- If the vehicle is unlocked by Passive Entry and no door is opened within 60 seconds, the vehicle will re-lock and, if equipped, will arm the Vehicle Security Alarm.

To Unlock From The Driver Side

With a valid Passive Entry key fob within 5 ft (1.5 m) of the driver's door handle, grab the front driver door handle to unlock the driver's door automatically.

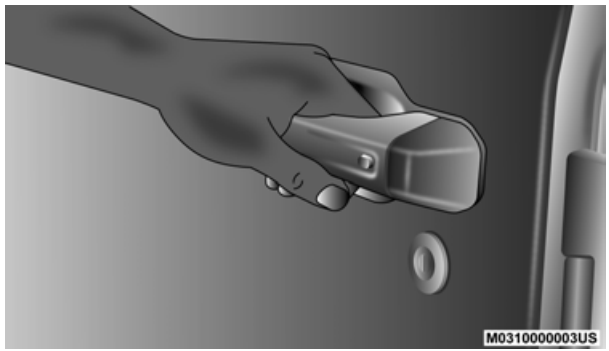

Grab The Door Handle To Unlock

NOTE:
If "1st Press Of Key Fob Unlock" is programmed, all doors will unlock when you grab a hold of the front driver's door handle. To select between "Unlock Driver Door 1st Press" and "Unlock All Doors 1st Press", refer to "Uconnect Settings" in "Multimedia" for further information.

To Unlock From The Passenger Side

With a valid Passive Entry key fob within 5 ft (1.5 m) of the passenger door handle, grab the front passenger door handle to unlock all doors automatically.

NOTE:
All doors will unlock when the front passenger door handle is grabbed regardless of the driver's door unlock preference setting ("Unlock Driver Door 1st Press" or "Unlock All Doors 1st Press").

Preventing Inadvertent Locking Of Passive Entry Key Fob In Vehicle (FOBIK-Safe)

To minimize the possibility of unintentionally locking a Passive Entry key fob inside your vehicle, the Passive Entry system is equipped with an automatic door unlock feature which will function only if the ignition switch is in the OFF position.

FOBIK-Safe only executes in vehicles with Passive Entry. There are three situations that trigger a FOBIK-Safe search in any Passive Entry vehicle:

- A lock request is made by a valid Passive Entry key fob while a door is open.
- A lock request is made by the Passive Entry door handle while a door is open.
- A lock request is made by the door panel switch while the door is open.

When any of these situations occur, after all open doors are closed, the FOBIK-Safe search will be executed. If it finds a Passive Entry key fob inside the vehicle, the vehicle will unlock and alert the customer. If Passive Entry is disabled using the Uconnect system, the key protection described in this section remains active/functional.

NOTE:
The vehicle will only unlock the doors during a FOBIK-Safe operation when a valid Passive Entry key fob is detected inside the vehicle. The vehicle will not unlock the doors when any of the following conditions are true:

- A second valid Passive Entry key fob is detected outside of the vehicle (within 5 ft (1.5 m) of a Passive Entry door handle).

- The doors are manually locked using the door lock levers.
- Three attempts are made to lock the doors using the power door lock switch and then close the doors.

To Lock The Vehicle's Doors

With one of the vehicle's Passive Entry key fob within 5 ft (1.5 m) of the driver or passenger front door handles, pushing the Passive Entry lock button will lock the vehicle doors.

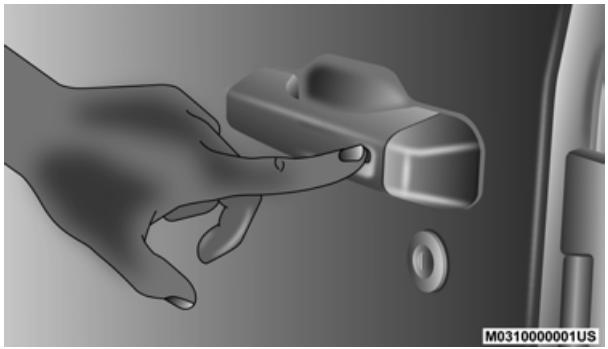

Push The Door Handle Button To Lock

NOTE:
When pushing the door handle lock button, DO NOT grab the door handle. This could unlock the door(s).

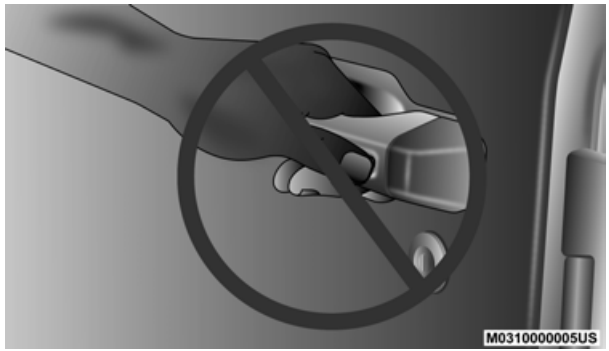

DO NOT Grab The Door Handle When Locking

The vehicle doors can also be locked by using the lock button located on the vehicle's interior door panel.

NOTE:

- After pushing the door handle button, the driver must wait three seconds before locking or unlocking the doors, using any Passive Entry door handle. This is done to allow the driver to check if the vehicle is locked by pulling the door handle without the vehicle reacting and unlocking.

- If Passive Entry is disabled using the Uconnect System, the key protection described in "Preventing Inadvertent Locking Of Passive Entry Key Fob In Vehicle" remains active/functional.
- The Passive Entry system will not operate if the key fob battery is depleted.

General Information

The following regulatory statement applies to all Radio Frequency (RF) devices equipped in this vehicle:

This device complies with Part 15 of the FCC Rules and with Innovation, Science and Economic Development Canada license-exempt RSS standard(s). Operation is subject to the following two conditions:

1. This device may not cause harmful interference, and
2. This device must accept any interference received, including interference that may cause undesired operation.

Le présent appareil est conforme aux CNR d`Innovation, Science and Economic Development applicables aux appareils radio exempts de licence. L'exploitation est autorisée aux deux conditions suivantes:

1. l'appareil ne doit pas produire de brouillage, et
2. l'utilisateur de l'appareil doit accepter tout brouillage radioélectrique subi, même si le brouillage est susceptible d'en compromettre le fonctionnement.

La operación de este equipo está sujeta a las siguientes dos condiciones:

1. es posible que este equipo o dispositivo no cause interferencia perjudicial y
2. este equipo o dispositivo debe aceptar cualquier interferencia, incluyendo la que pueda causar su operación no deseada.

NOTE:
Changes or modifications not expressly approved by the party responsible for compliance could void the user's authority to operate the equipment.

Automatic Door Locks — If Equipped

The Automatic Door Lock feature default condition is enabled. When enabled, the door locks will lock automatically when the vehicle's speed exceeds 15 mph (24 km/h). The Automatic Door Lock feature can be enabled or disabled by an authorized dealer per written request of the customer. Please see an authorized dealer for service.

Child-Protection Door Lock System — Rear Doors

To provide a safer environment for small children riding in the rear seats, the rear doors are equipped with a Child-Protection Door Lock system.

To use the system, open each rear door, use a flat blade screwdriver (or mechanical key) and rotate the dial to the lock or unlock position.

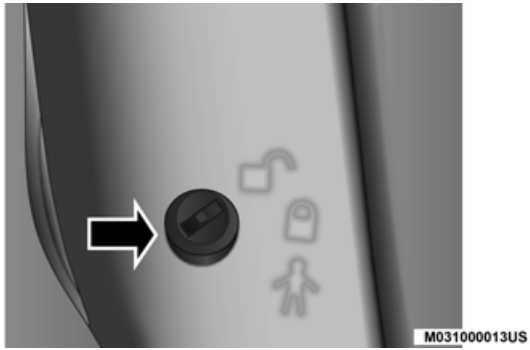

Child Protection Door Lock Function

NOTE:

- When the Child-Protection Door Lock system is engaged, the door can be opened only by using the outside door handle, even though the inside door lock is in the unlocked position.
- After engaging or disengaging the Child-Protection Door Lock system, always test the door from the inside to make certain it is in the desired position.
- For emergency exit with the system engaged, move the lock lever rearward (located on the door trim panel), roll down the window and open the door with the outside door handle.

WARNING!
Avoid trapping anyone in a vehicle in a collision. Remember that the rear doors can only be opened from the outside when the Child-Protection Door Lock system is engaged (locked).

NOTE:
Always use this device when carrying children. After engaging the child lock on both rear doors, check for effective engagement by trying to open a door with the internal handle. Once the Child-Protection Door Lock system is engaged, it is impossible to open the doors from inside the vehicle. Before getting out of the vehicle, be sure to check that there is no one left inside.

Front Door Removal

WARNING!
Do not drive your vehicle on public roads with the doors removed as you will lose the protection they can provide. This procedure is furnished for use during off-road operation only.

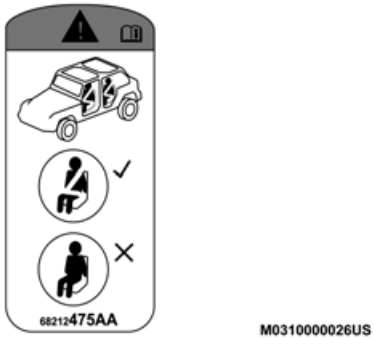

Door Removal Warning Label

WARNING!
• **All occupants must wear seat belts during off-road operation with doors removed. Refer to "Off-Road Driving Tips" in "Starting And Operating" for further information.** • **Do not store detached doors inside of the vehicle, as they may cause personal injury in the event of an accident.** • **Assistance to remove doors may by required due to the weight of the door to avoid personal injury.**

CAUTION!

- **Hinge pins can break if overtightened during door reinstall (Max Torque: 5.88 ft·lb / 8 N·m). Refer to "Off-Road Driving Tips" in "Starting And Operating" for further information.**
- **Do not over-tighten Torx fasteners. Damage to the vehicle's parts will occur.**

NOTE:
When front doors are removed, the message "Blind Spot Alert Temporarily Unavailable" will display in the instrument cluster display. Power Mirrors and Power Door Locks will also be unavailable.

To remove the front doors, proceed as follows:

1. Roll down the glass window to prevent any damage.
2. Remove the hinge pin nut from the upper and lower outside hinges (using a #T50 Torx head driver).

NOTE:
The hinge nuts can be stowed in the Fastener Bin located under the rear seat.

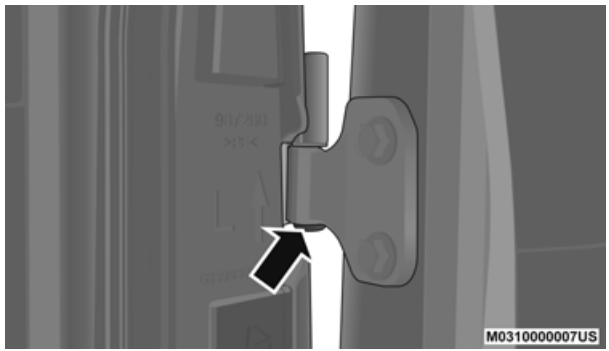

Hinge Pin Nut

3. Remove the plastic wiring access door under the instrument panel by sliding the plastic panel along the door frame toward the seats until the tabs are detached.

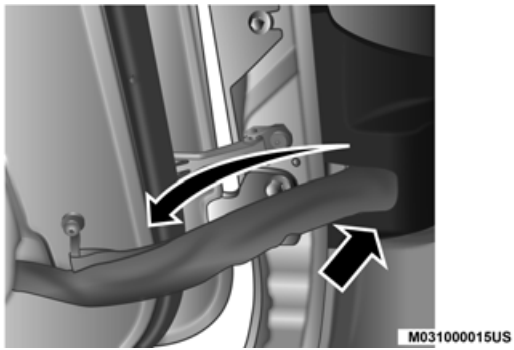

Wiring Access Door

NOTE:
Do not force open; this will break the plastic cover.

4. Pull up on the red locking tab to unlock the wiring harness.

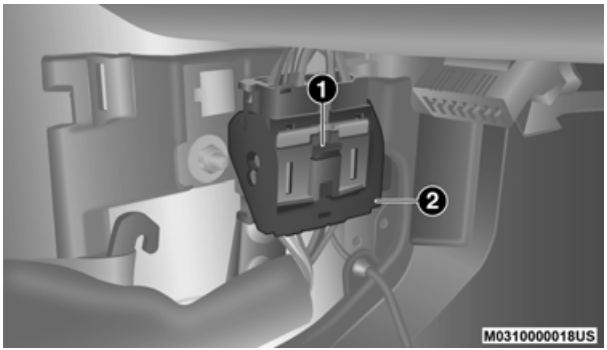

Closed Wiring Harness

1 — Locking Tab
2 — Wiring Harness Lever

5. Push and hold down the black security tab under the wiring harness, and lift the harness lever into the open position.

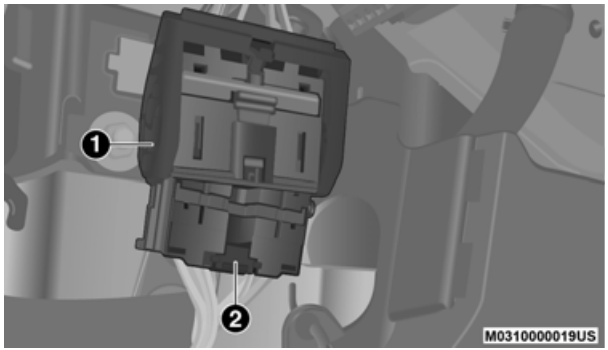

Open Wiring Harness

1 — Wiring Harness Lever
2 — Wiring Connector

6. With the wiring harness open, pull downward on the wiring connector to unplug. Unhook the wire harness strap from the hook on the bodyside door opening. Store the wiring connector in the lower door basket of the door.

7. With the door in the open position, remove the check bolt from the door check attachment on the bodyside (using a #T40 Torx head driver).

NOTE:
Keep the check arm in the extended position for easier re-installation.

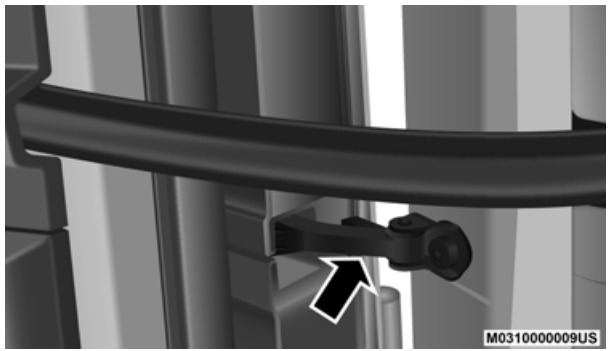

Door Check

8. With the door open, lift the door with the help of another person, to clear the hinge pins from their hinges and remove the door.

To reinstall the door(s), perform the previous steps in the reverse order.

NOTE:
The upper hinge has a longer pin, which can be used to assist in guiding the door into place when reinstalling. When reinstalling the door check arm attachment bolt, bolt torque should be between 11.76 ft·lb / 16 N·m and 27.9 ft·lb / 38 N·m.

Rear Door Removal

WARNING!
Do not drive your vehicle on public roads with the doors removed as you will lose the protection they can provide. This procedure is furnished for use during off-road operation only.

M0310000026US

Door Removal Warning Label

WARNING!
• **All occupants must wear seat belts during off-road operation with doors removed. Refer to "Off-Road Driving Tips" in "Starting And Operating" for further information.** • **Do not store detached doors inside of the vehicle, as they may cause personal injury in the event of an accident.** • **Assistance to remove doors may by required due to the weight of the door to avoid personal injury.**

CAUTION!

- **Hinge pins can break if overtightened during door reinstall (Max Torque: 5.88 ft·lb / 8 N·m). Refer to "Off-Road Driving Tips" in "Starting And Operating" for further information.**
- **Do not over-tighten Torx fasteners. Damage to the vehicle's parts will occur.**

To remove the rear doors, proceed as follows:

1. Roll down the glass window to prevent any damage.
2. Remove the hinge pin nuts from the upper and lower outside hinges (using a #T50 Torx head driver).

NOTE:
The hinge pin nuts can be stowed in the Fastener Bin under the rear seat.

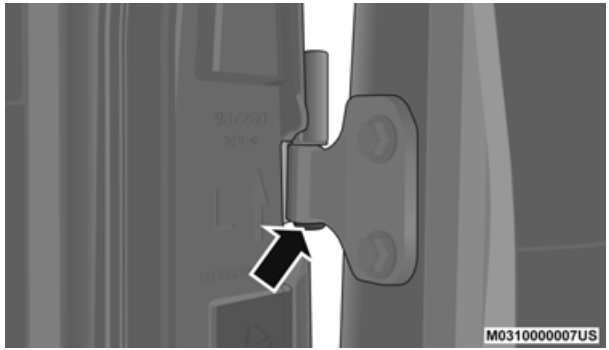

Hinge Pin Nut

3. Slide the front seat(s) fully forward.

4. Pry open and remove the plastic wiring access door from the bottom of the B-Pillar.

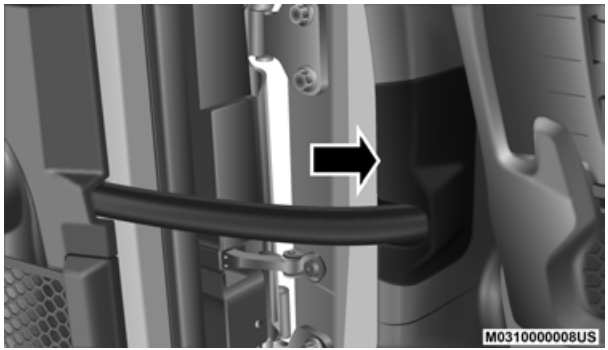

Wiring Access Door

5. Unplug the wiring connector.

NOTE:
Squeeze the tab on the base of the wiring harness. This will unlock the connector tab, allowing the wiring connector to be unplugged. Unhook the wire harness strap from the hook on the bodyside door opening. Store the wire connector into the lower basket of the door.

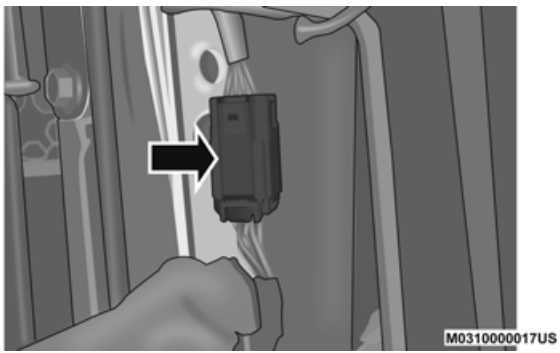

Wiring Connector

6. With the door in the open position, remove the check bolt from the door check attachment on the bodyside (using a #T40 Torx head driver).

NOTE:
Keep the check arm in the extended position for easier reinstallation.

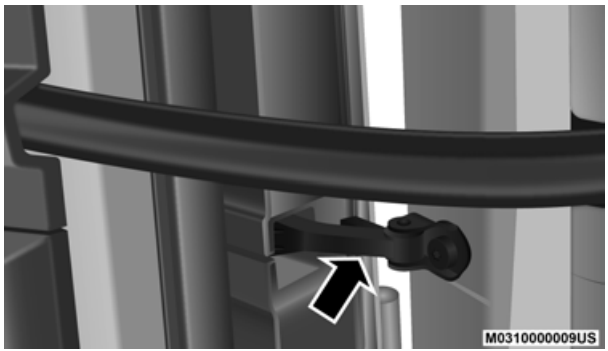

Door Check

7. With the door open, lift the door with the help of another person, to clear the hinge pins from their hinges and remove the door.

To reinstall the door(s), perform the previous steps in the reverse order.

NOTE:
The upper hinge has a longer pin, which can be used to assist in guiding the door into place when reinstalling. When reinstalling the check arm attachment bolt, bolt torque should be between 11.76 ft·lb / 16 N·m and 27.9 ft·lb / 38 N·m.

CAUTION!
• **Hinge pins can break if overtightened during door reinstall (Max Torque: 5.88 ft·lb / 8 N·m). Refer to "Off-Road Driving Tips" in "Starting And Operating" for further information.** • **Do not over-tighten Torx fasteners. Damage to the vehicle's parts will occur.**

SEATS

Seats are a part of the Occupant Restraint System of the vehicle.

WARNING!

- **It is dangerous to ride in a cargo area, inside or outside of a vehicle. In a collision, people riding in these areas are more likely to be seriously injured or killed.**
- **Do not allow people to ride in any area of your vehicle that is not equipped with seats and seat belts. In a collision, people riding in these areas are more likely to be seriously injured or killed.**
- **Be sure everyone in your vehicle is in a seat and using a seat belt properly.**

Manual Front Seats

Front Seat Adjustment

The seat can be adjusted forward or rearward by using a bar located by the front of the seat cushion, near the floor. While sitting in the seat, lift up on the bar located under the seat cushion and move the seat forward or rearward. Release the bar once you have reached the desired position. Then, using body pressure, move forward and rearward on the seat to be sure that the seat adjusters have latched.

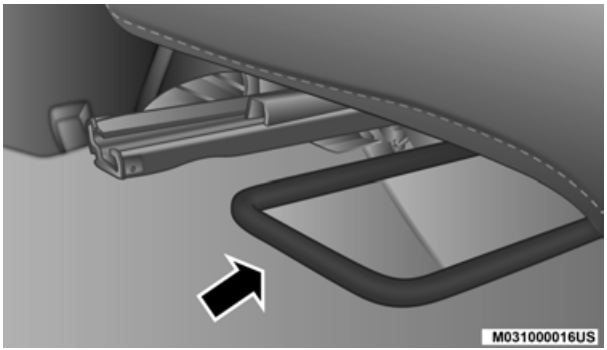

Adjustment Bar Location

WARNING!

- **Adjusting a seat while driving may be dangerous. Moving a seat while driving could result in loss of control which could cause a collision and serious injury or death.**
- **Seats should be adjusted before fastening the seat belts and while the vehicle is parked. Serious injury or death could result from a poorly adjusted seat belt.**

Manual Seat Height Adjustment

The driver's seat height can be raised or lowered by using the ratcheting handle, located on the outboard side of the seat. Pull upward on the handle to raise the seat, push downward on the handle to lower the seat. Several strokes may be necessary to achieve the desired position.

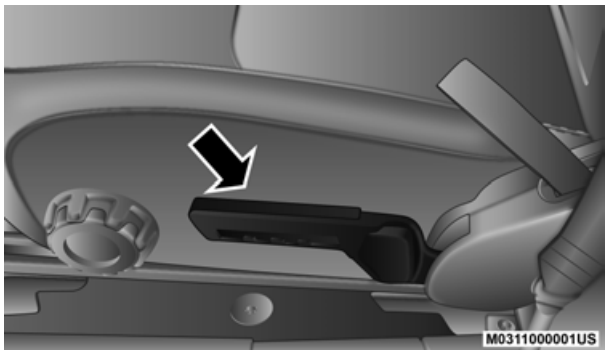

Seat Height Adjustment

Front Seatback Recline

To recline the seat, pull on the recline strap and lean forward or rearward, depending on the direction you would like the seatback to move. Release the strap when the desired position is reached and the seatback will lock into place.

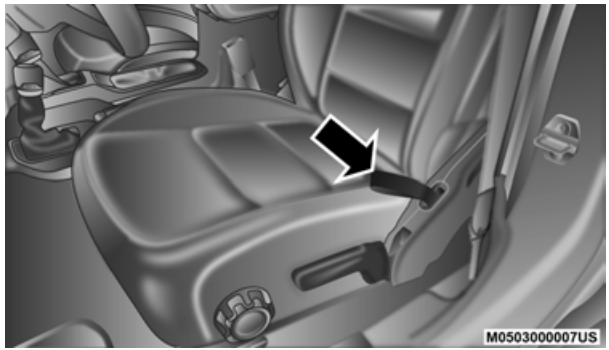

Recline Strap

WARNING!
Do not ride with the seatback reclined so that the shoulder belt is no longer resting against your chest. In a collision you could slide under the seat belt, which could result in serious injury or death.

Lumbar Support

The Lumbar Support Control knob is located on the outboard side of the front driver seat. Rotate the control forward to increase and rearward to decrease the desired amount of lumbar support.

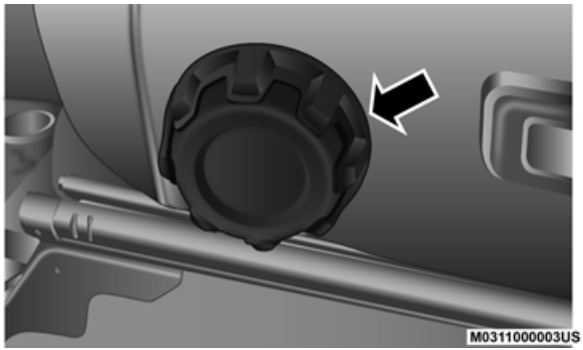

Lumbar Support Control Knob

Heated Seats — If Equipped

The Heated Seat Control Buttons are located on the center instrument panel below the touchscreen and also in the Climate Control touchscreen menu.

Heated Seat Control Buttons

- Push the heated seat button once to turn the HI setting on.
- Push the heated seat button a second time to turn the MED setting on.
- Push the heated seat button a third time to turn the LO setting on.
- Push the heated seat button a fourth time to turn the heating elements off.

NOTE:

- The engine must be running for the heated seats to operate.
- The level of heat selected will stay on until the operator changes it.

Vehicles Equipped With Remote Start

On models that are equipped with Remote Start, the driver's seat can be programmed to come on during a remote start.

This feature can be programmed through the Uconnect system. Refer to "Uconnect Settings" in "Multimedia" for further information.

WARNING!

- **Persons who are unable to feel pain to the skin because of advanced age, chronic illness, diabetes, spinal cord injury, medication, alcohol use, exhaustion or other physical condition must exercise care when using the seat heater. It may cause burns even at low temperatures, especially if used for long periods of time.**

(Continued)

WARNING! *(Continued)*

- **Do not place anything on the seat or seatback that insulates against heat, such as a blanket or cushion. This may cause the seat heater to overheat. Sitting in a seat that has been overheated could cause serious burns due to the increased surface temperature of the seat.**

60/40 Split Folding Rear Seat

WARNING!

Seatback is not intended to be used for storing cargo when folded flat. Seatback only folds to allow access to the cargo area behind the seat. Vehicle should not be operated with unsecured cargo on the second row folded seatback.

The 60/40 Split Folding Rear Seat can be folded flat to access the storage area behind the seat. The seat bottom can also be lifted into the Stadium Position to create more storage space on the rear floor, and provide access to the underseat storage bins (if equipped). Refer to "Rear Seat Stadium Position" in this section for more information.

NOTE:

- Be sure that the front seats are fully upright and positioned forward. This will allow the rear seat to fold down easily.
- The center head restraints must be in the lowest position to avoid contact with the center console when folding the seat.

WARNING!
• **It is extremely dangerous to ride in a cargo area, inside or outside of a vehicle. In a collision, people riding in these areas are more likely to be seriously injured or killed.** • **Do not allow people to ride in any area of your vehicle that is not equipped with seats and seat belts.** • **Be sure everyone in your vehicle is in a seat and using a seat belt properly.**

Folding The Rear Seats

To fold down the rear seat, pull the release strap located on the upper outboard side of the rear seat. The seat and the head restraint fold simultaneously.

NOTE:
Each rear seatback can be locked in an upright position using the vehicle key. Each seatback must be unlocked to release for folding.

Release Strap Locations

Rear Seat Folded Flat

To raise the seatback to the proper position, manually lift the seatback until it locks into place. To return the head restraint to the proper position, manually lift up until it locks into place. If interference from the cargo area behind the seat prevents the seatback from fully locking, you will have difficulty returning the seats to their proper position.

NOTE:

- The vehicle is equipped with stow clips located on the lower trim, next to the rear seats. Use these clips to hold the seat belt out of the path of the seat back when it is being folded and raised.
- You may experience deformation in the seat cushion from the seat belt buckles if the seats are left folded for an extended period of time. This is normal. By simply opening the seats to the open position, the seat cushion will return to its normal shape over time.

WARNING!
Be certain that the seatback is securely locked into position. Perform a "push - pull - push" check to confirm the seat is fully locked. If the seatback is not securely locked into position, the seat will not provide the proper stability for child seats and/or passengers. A red indicator on the pull strap will be displayed if the seatback is not securely locked. An improperly latched seat could cause serious injury.

Rear Seat Stadium Position

The rear seat bottoms can be folded upward into the Stadium Position to create more storage space on the vehicle's floor, and to access the under seat storage bins (if equipped).

To fold the seat bottom upward, proceed as follows:

1. Lift upward on each section of the seat bottom.

Lift From Beneath Seat (Left Side Shown)

2. Raise the seat bottom upward into the Stadium Position.

Stadium Position

To return the seat bottom to the normal position, push downward on the raised seat bottom.

Rear Seat Armrest — If Equipped

The center part of the rear seat can also be used as a rear armrest with cupholders. To unfold it, grab the pull strap under the head restraint and pull it forward.

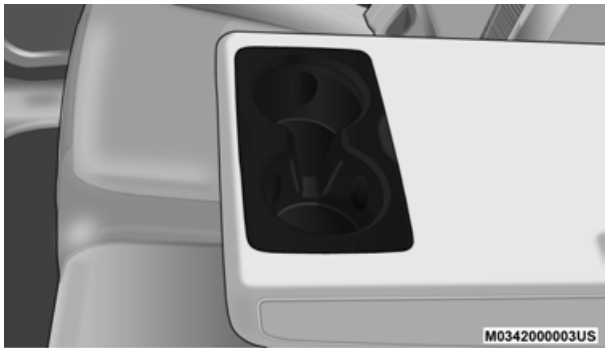

Rear Seat Armrest

NOTE:
The cupholder liner can be removed for cleaning.

WARNING!
Be certain that the seatback is securely locked into position. If the seatback is not securely locked into position the seat will not provide the proper stability for child seats and/or passengers. An improperly latched seat could cause serious injury.

HEAD RESTRAINTS

Head restraints are designed to reduce the risk of injury by restricting head movement in the event of a rear impact. Head restraints should be adjusted so that the top of the head restraint is located above the top of your ear.

WARNING!
• **All occupants, including the driver, should not operate a vehicle or sit in a vehicle's seat until the head restraints are placed in their proper positions in order to minimize the risk of neck injury in the event of a crash.** • **Head restraints should never be adjusted while the vehicle is in motion. Driving a vehicle with the head restraints improperly adjusted or removed could cause serious injury or death in the event of a collision.**

Front Head Restraints

To raise the head restraint, pull upward on the head restraint. To lower the head restraint, push the adjustment button located on the base of the head restraint, and push downward on the head restraint. The release button does not need to be pushed to adjust the head restraint.

To remove the head restraint, raise it as far as it can go, then push the adjustment button and the release button at the base of each post while pulling the head restraint up. To reinstall the head restraint, put the head restraint posts into the holes and push downward. Then adjust it to the appropriate height.

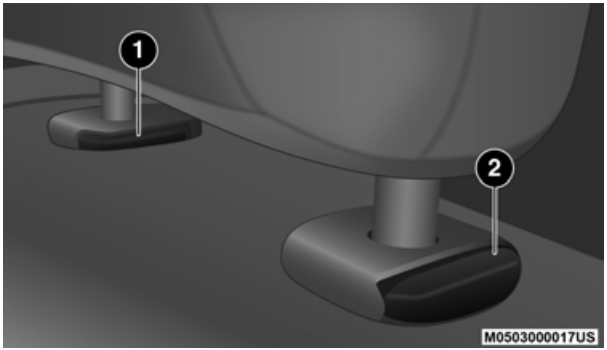

Front Head Restraint

1 — Release Button
2 — Adjustment Button

WARNING!

- **A loose head restraint thrown forward in a collision or hard stop could cause serious injury or death to occupants of the vehicle. Always securely stow removed head restraints in a location outside the occupant compartment.**

(Continued)

WARNING! *(Continued)*

- **ALL the head restraints MUST be reinstalled in the vehicle to properly protect the occupants. Follow the reinstallation instructions above prior to operating the vehicle or occupying a seat.**

NOTE:
Do not reposition the head restraint 180 degrees to the incorrect position in an attempt to gain additional clearance to the back of the head.

Rear Head Restraints

The rear seat is equipped with nonadjustable, but foldable, outboard head restraints, as well as an adjustable, removable center head restraint.

To fold down the outboard head restraints, push the button located on the outboard side of the head restraint.

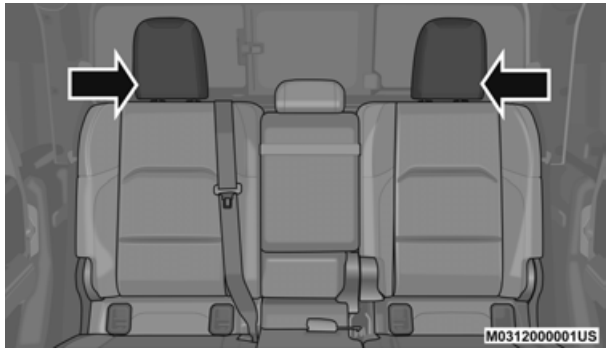

Rear Foldable Outboard Head Restraints

To return the head restraint to its upward position, lift up on the head restraint until it locks into place.

To raise the center head restraint, lift up on the head restraint. To lower the center head restraint, push the adjustment button, located at the base of the head restraint, and push down on the head restraint.

To remove the center head restraint, raise it as far as it can go. Then, push the adjustment button and the release button at the base of each post while pulling the head restraint up.

To reinstall the head restraint, put the head restraint posts into the holes and push downward. Then, adjust it to the appropriate height using the adjustment button. Refer to "Occupant Restraint Systems" in "Safety" for information on child seat tether routing.

NOTE:
Lower the center head restraint to avoid contact with the center console when folding the seat down.

WARNING!
• **Do not drive the vehicle without the rear seat head restraints installed while passengers are occupying the rear seat. In a collision, people riding in this area without the head restraints installed are more likely to be seriously injured or killed.** • **A loose head restraint thrown forward in a collision or hard stop could cause serious injury or death to occupants of the vehicle. Always securely stow removed head restraints in a location outside the occupant compartment.** • **ALL the head restraints MUST be reinstalled in the vehicle to properly protect the occupants. Follow the reinstallation instructions above prior to operating the vehicle or occupying a seat.**

STEERING WHEEL

Tilt/Telescoping Steering Column

The Tilt/Telescoping Steering Column feature allows the steering column to tilt upward or downward, and lengthen or shorten the steering column. The Tilt/Telescoping lever is located on the steering column, below the turn signal lever.

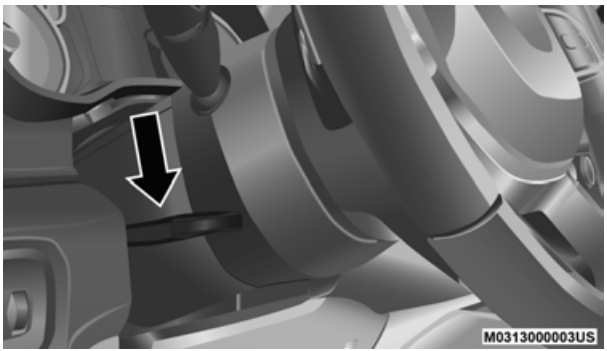

Tilt/Telescoping Steering Column Lever

To unlock the steering column, push the Tilt/Telescoping lever downward (toward the floor). To tilt the steering column, move the steering wheel upward or downward as desired.

To lengthen or shorten the steering column, pull the steering wheel outward or push it inward as desired.

To lock the steering column in position, pull the Tilt/Telescoping lever upward until fully engaged.

WARNING!
Do not adjust the steering column while driving. Adjusting the steering column while driving or driving with the steering column unlocked, could cause the driver to lose control of the vehicle. Failure to follow this warning may result in serious injury or death.

Heated Steering Wheel — If Equipped

The steering wheel contains a heating element that will warm the steering wheel in cold weather. The heated steering wheel has only one temperature setting. Once the heated steering wheel has been turned on, it will stay on until the operator turns it off. The heated steering wheel may not turn on when it is already warm.

The heated steering wheel control button is located on the center of the instrument panel below the touchscreen and within the climate or controls screen of the touchscreen.

- Push the heated steering wheel button once to turn the heating element on.
- Push the heated steering wheel button a second time to turn the heating element off.

NOTE:
The engine must be running for the heated steering wheel to operate.

Vehicles Equipped With Remote Start

On models that are equipped with Remote Start, the heated steering wheel can be programmed to come on during a remote start.

This feature can be programmed through the Uconnect system. Refer to “Uconnect Settings” in “Multimedia” for further information.

WARNING!
• **Persons who are unable to feel pain to the skin because of advanced age, chronic illness, diabetes, spinal cord injury, medication, alcohol use, exhaustion, or other physical conditions must exercise care when using the steering wheel heater. It may cause burns even at low temperatures, especially if used for long periods.**

(Continued)

WARNING! *(Continued)*
• **Do not place anything on the steering wheel that insulates against heat, such as a blanket or steering wheel covers of any type and material. This may cause the steering wheel heater to overheat.**

MIRRORS

Inside Day/Night Mirror — If Equipped

The Inside Day / Night Mirror can be adjusted up, down, left, and right for various drivers. The mirror should be adjusted to center on the view through the rear window.

Headlight glare from other vehicles can be reduced by moving the small control under the mirror to the night position (toward the rear of the vehicle). The mirror should be adjusted while set in the day position (toward the windshield).

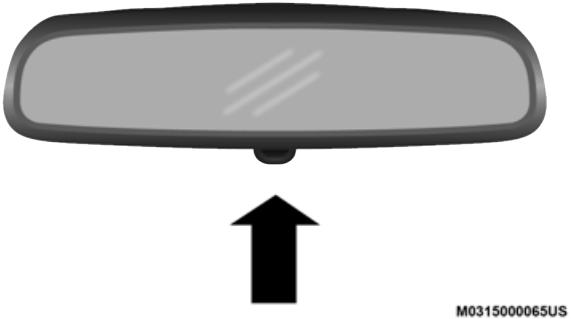

Adjusting Rearview Mirror

Automatic Dimming Mirror — If Equipped

The Automatic Dimming Mirror can be adjusted up, down, left, and right for various drivers. The mirror should be adjusted to center on the view through the rear window.

The mirror automatically adjusts to headlight glare from other vehicles.

NOTE:
The Automatic Dimming feature is disabled when the vehicle is in REVERSE to improve the driver's view.

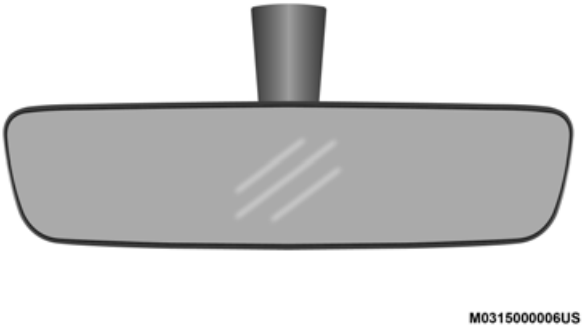

Automatic Dimming Mirror

The Automatic Dimming feature defaults to on at every ignition cycle, and can be turned on or off through the Uconnect "Controls" button on the touchscreen.

CAUTION!
To avoid damage to the mirror during cleaning, never spray any cleaning solution directly onto the mirror. Apply the solution onto a clean cloth and wipe the mirror clean.

Outside Mirrors

The Outside Mirrors are located on the front driver and passenger side doors, and are adjusted manually or by power adjustment (if equipped).

To receive maximum benefit, adjust the Outside Mirror(s) to center on the adjacent lane of traffic with a slight overlap of the view obtained on the inside mirror.

Outside Rearview Mirror

WARNING!
Vehicles and other objects seen in the passenger side convex mirror will look smaller and farther away than they really are. Relying too much on your passenger side mirror could cause you to collide with another vehicle or other object. Use your inside mirror when judging the size or distance of a vehicle seen in the passenger side mirror.

Power Mirrors — If Equipped

The Power Mirror controls are located on the door panel next to the door handle.

Power Mirror Control Switch

The Power Mirror controls consist of mirror select buttons and a four-way mirror control switch. To adjust a mirror, push either the L (left) or R (right) button to select the mirror that you want to adjust.

Using the Power Mirror Control Switch, push any of the four arrows for the direction that you want the mirror to move.

Heated Mirrors — If Equipped

The Heated Mirrors feature helps to melt frost or ice. This feature will be activated whenever the rear window defroster (if equipped) is activated. Refer to "Climate Controls" in "Getting To Know Your Vehicle" for further information.

Vanity Mirrors

Vanity Mirrors are located on the sun visors. To use the mirrors, rotate the sun visor down and swing the mirror cover upward.

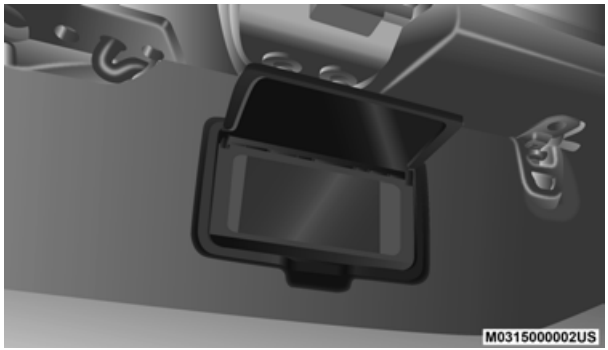

Vanity Mirror

EXTERIOR LIGHTS

Headlight Switch

The Headlight Switch is located on the left side of the instrument panel. This switch controls the operation of the headlights, parking lights, automatic headlights (if equipped), instrument panel lights, instrument panel light dimming, interior lights, and fog lights (if equipped).

Headlight Switch

Rotate the Headlight Switch clockwise to the first detent for parking light and instrument panel light operation. Rotate the Headlight Switch to the second detent for headlight, parking light, and instrument panel light operation.

Daytime Running Lights — If Equipped

The Daytime Running Lights (DRLs) are in a dedicated position below the headlight assembly. DRLs are active when the Low Beams are not on, and when the vehicle is shifted into

any position other than PARK (Automatic Transmission), or when the vehicle begins to move (Manual Transmission).

NOTE:
The DRLs, on the same side of the vehicle as the active turn signal, will turn off automatically when a turn signal is in operation and turn on again when the turn signal is not operating.

High/Low Beam Switch

The High/Low Beam Switch is located within the Multifunction Lever on the left side of the steering wheel. High beam headlights can be used for improved visibility in low lit areas when there is no oncoming traffic. Otherwise, it is recommended to use the low beam headlights to reduce glare to other vehicles.

With the headlight switch activated, push the Multifunction Lever toward the instrument panel to switch the headlights to high beams. The lever will return to the centered position. To return the headlights to low beam, pull the lever toward the steering wheel, or push the lever toward the instrument panel.

M0316000003US

Multifunction Lever

Flash-To-Pass

The Flash-To-Pass feature will illuminate the high beam headlights temporarily to signal another vehicle of a passing occurrence. Pull and hold the Multifunction Lever to activate the Flash-To-Pass feature. When the lever is released, the Flash-To-Pass feature will deactivate.

Automatic Headlights — If Equipped

The Automatic Headlight System will turn the headlights on or off according to ambient light levels. To turn the system on, rotate the headlight switch clockwise to the last detent for

automatic headlight operation. When the system is on, the headlight time delay feature is also on. This means the headlights will stay on for up to 90 seconds after you place the ignition into the OFF position. To turn the automatic system off, move the headlight switch out of the AUTO position.

NOTE:
The engine must be running before the headlights will come on in the automatic mode.

Front Fog Lights — If Equipped

The Front Fog Lights are located on the front of the vehicle below the headlights. When activated, these lights add illumination directed at the driving surface to aid in poor visibility conditions.

To activate the Front Fog Lights, turn on the parking lights or low beam headlights and push the fog light switch. Pushing the fog light switch a second time will turn the front fog lights off.

Front Fog Light Switch

Turn Signals

Move the multifunction lever up or down and the arrows on each side of the instrument cluster flash to show proper operation of the front and rear turn signal lights.

NOTE:
If either light remains on and does not flash, or there is a very fast flash rate, check for a defective outside light bulb. If an indicator fails to light when the lever is moved, it would suggest that the indicator bulb is defective.

Lane Change Assist — If Equipped

The Lane Change Assist feature will flash the turn signal (left or right) three times to indicate to other drivers that you are changing lanes. Tap the multifunction lever up or down once, without moving beyond the detent, and the turn signal (right or left) will flash three times then automatically turn off.

Lights-On Reminder

The Lights-On Reminder feature will identify if the headlights, parking lights, or cargo lights are left on after the ignition is turned OFF; a chime will sound when the driver's door is opened.

Bed Lights — If Equipped

The bed lights will illuminate the bed and cargo area. Bed lights are turned on by pushing the bed light switch located on the lower half of the headlight switch.

Bed Light Switch

A telltale will illuminate in the instrument cluster display when these lights are on. Pushing the switch a second time will turn the lights off.

The bed lights will turn on for approximately 60 seconds when a key fob unlock button is pushed, as part of the Illuminated Entry feature.

INTERIOR LIGHTS

Courtesy Lights

The Interior Courtesy Lights will turn on when the front doors are opened, by rotating the dimmer controls on the headlight switch fully upward, or, if equipped, when the unlock button is pushed on the key fob.

The Interior Courtesy Lights are located in the center of the vehicle's sport bar, and consist of one large center light and four smaller reading lights. Each reading light can be turned on by pushing the lens. Pushing the lens a second time will turn the light off.

Interior Courtesy Lights

When a door is open and the interior lights are on, rotating the dimmer control to the extreme bottom position will cause all the interior lights to turn off. This is also known as "Party" mode because it allows the doors to stay open for extended periods of time without discharging the vehicle's battery.

Dimmer Controls

The dimmer controls are part of the headlight switch and are located on the left side of the instrument panel.

Dimmer Controls

With the parking lights or headlights on, rotating the right dimmer control upward will increase the brightness of the instrument panel lights. Rotating the left dimmer control will adjust the interior and ambient light levels.

WINDSHIELD WIPERS AND WASHERS

The windshield wiper/washer control lever is located on the right side of the steering column; it operates the multiple wiper options. The front wipers are operated by rotating a switch, located at the end of the lever.

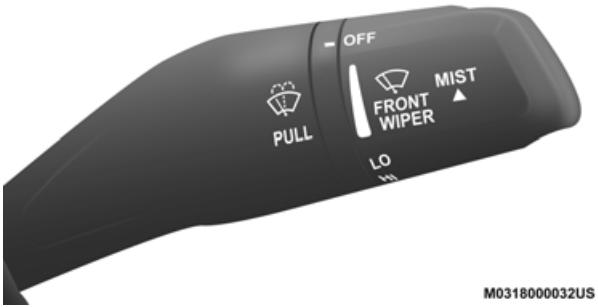

Windshield Wiper/Washer Lever

Windshield Wiper Operation

Rotate the end of the lever upward to the first detent past the intermittent settings for low-speed wiper operation. Rotate the end of the lever upward to the second detent past the intermittent settings for high-speed wiper operation.

Front Wiper Control

CAUTION!
In cold weather, always turn off the wiper switch and allow the wipers to return to the park position before turning off the engine. If the wiper switch is left on and the wipers freeze to the windshield, damage to the wiper motor may occur when the vehicle is restarted.

Intermittent Wiper System

Use the intermittent wiper when weather conditions make a single wiping cycle, with a variable pause between cycles, desirable. Rotate the end of the lever to the first detent position for one of four intermittent settings. The delay cycle can be set anywhere between 1 to 18 seconds.

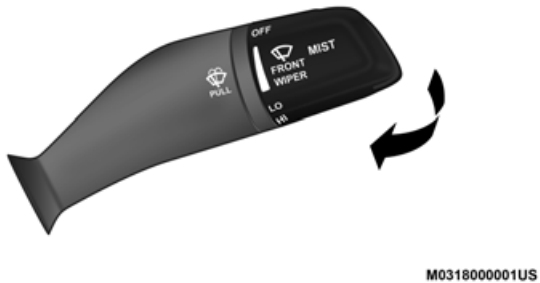

Intermittent Wiper Control

NOTE:
The wiper delay times depend on vehicle speed. If the vehicle is moving less than 10 mph (16 km/h), delay times will be doubled.

Windshield Washers

To use the washer, pull the lever toward you and hold until desired spray is reached. If the lever is pulled while in the delay range, the wiper will start and continue to operate for two or three wipe cycles after the lever is released. Then, the intermittent interval previously selected will resume.

If the lever is pulled while in the off position, the wipers will operate for two or three wipe cycles. Then, the wipers will turn off.

WARNING!
Sudden loss of visibility through the windshield could lead to a collision. You might not see other vehicles or other obstacles. To avoid sudden icing of the windshield during freezing weather, warm the windshield with the defroster before and during windshield washer use.

Mist Feature

Push upward on the wiper lever to activate a single wipe to clear off-road mist or spray from a passing vehicle. As long as the lever is held up, the wipers will continue to operate.

NOTE:
The mist feature does not activate the washer pump; therefore, no washer fluid will be sprayed on the windshield. The wash function must be used in order to spray the windshield with washer fluid.

Mist Control

CLIMATE CONTROLS

The Climate Control System allows you to regulate the temperature, air flow, and direction of air circulating throughout the vehicle. The controls are located on the touchscreen and on the instrument panel below the radio.

Manual Climate Control Overview

The Manual Climate Controls System is an air conditioning and heating system designed to make the vehicle comfortable in all types of weather.

M0320000008US

Manual Climate Controls

Specific instructions on how to adjust the heat and air conditioning settings are detailed in the following Manual Climate Control Descriptions chart.

Manual Climate Control Descriptions

Icon	Description
A/C	**A/C Button — If Equipped** Push the A/C button to engage the Air Conditioning. An LED illuminates when the A/C system is engaged.
MAX A/C	**MAX A/C Setting — If Equipped** Turn the temperature control knob to the MAX A/C (Air Conditioning) position to engage the coldest temperature setting.
	Recirculation Button Press and release this button on the touchscreen, or push the button on the faceplate, to change the system between recirculation mode and outside air mode. Recirculation can be used when outside conditions such as smoke, odors, dust, or high humidity are present. Recirculation can be used in all modes except for Defrost. Recirculation may be unavailable if conditions exist that could create fogging on the inside of the windshield.The A/C can be deselected manually without disturbing the mode control selection. Continuous use of the Recirculation mode may make the inside air stuffy and window fogging may occur. Extended use of this mode is not recommended.
REAR	**Rear Defrost Button** Push and release the Rear Defrost button to turn on the rear window defroster and the heated outside mirrors (if equipped). An indicator will illuminate when the rear window defroster is on. The rear window defroster automatically turns off after ten minutes.
	Temperature Control Use this control to regulate the temperature of the air inside the passenger compartment. Rotating the knob counterclockwise, from top center into the blue area of the scale, indicates cooler temperatures. Rotating the knob clockwise, into the red area, indicates warmer temperatures.

Icon	Description
	Blower Control Use this control to regulate the amount of air forced through the system in any mode you select. The blower speed increases as you move the control clockwise from the off position.
	Modes Control Turn the knob to adjust airflow distribution. The airflow distribution mode can be adjusted so air comes from the instrument panel outlets, floor outlets, defrost outlets and demist outlets.
Panel Mode 	**Panel Mode** Air comes from the outlets in the instrument panel. Each of these outlets can be individually adjusted to direct the flow of air. The air vanes of the center outlets and outboard outlets can be moved up and down or side to side to regulate airflow direction.
Bi-Level Mode 	**Bi-Level Mode** Air comes from the instrument panel outlets and floor outlets. A slight amount of air is directed through the defrost and side window demister outlets. **NOTE:** Bi-Level mode is designed under comfort conditions to provide cooler air out of the panel outlets and warmer air from the floor outlets.

Icon	Description
Floor Mode	**Floor Mode** Air comes from the floor outlets. A slight amount of air is directed through the defrost and side window demister outlets.
Mix Mode	**Mix Mode** Air is directed through the floor, defrost, and side window demister outlets. This setting works best in cold or snowy conditions that require extra heat to the windshield. This setting is good for maintaining comfort while reducing moisture on the windshield.
FRONT	**Front Defrost Mode** Turn the knob to the Front Defrost position. Air comes from the windshield and side window demist outlets. Use Defrost mode with maximum temperature settings for best windshield and side window defrosting and defogging.

Automatic Climate Controls Overview

The Automatic Climate Control System is designed to make the vehicle feel comfortable in all types of weather. The Automatic Climate Controls system allows you to adjust heat and air conditioning settings by pressing buttons on the touchscreen.

Uconnect 4 With 7–inch Display Automatic Climate Controls

Uconnect 4C/4C NAV With 8.4–inch Display Automatic Climate Controls

Specific instructions on how to adjust the heat and air conditioning settings are detailed in the following Automatic Climate Control Descriptions chart.

Automatic Climate Control Descriptions

Icon	Description
MAX A/C	**MAX A/C Button** Press to change to the coldest setting, the indicator illuminates when MAX A/C is on. Pressing the button again causes the MAX A/C operation to switch into manual mode and the MAX A/C indicator turns off. **NOTE:** The MAX A/C button is only available on the touchscreen.
A/C	**A/C Button** Press and release to change the current setting. The indicator illuminates when A/C is on.
	Recirculation Button Press and release this button on the touchscreen, or push the button on the faceplate, to change the system between recirculation mode and outside air mode. Recirculation can be used when outside conditions, such as smoke, odors, dust, or high humidity are present. Recirculation can be used in all modes. Recirculation may be unavailable (button on the touchscreen greyed out) if conditions exist that could create fogging on the inside of the windshield. The A/C can be deselected manually without disturbing the mode control selection. Continuous use of the Recirculation mode may make the inside air stuffy and window fogging may occur. Extended use of this mode is not recommended.
AUTO	**AUTO Button** Automatically controls the interior cabin temperature by adjusting airflow distribution and amount. Toggling this button causes the system to switch between manual mode and automatic modes. Refer to “Automatic Operation” within this section for more information.

Icon	Description
	Front Defrost Button Press and release the touchscreen button, or push and release the button on the faceplate, to change the current airflow setting to Defrost mode. The indicator illuminates when this feature is on. Air comes from the windshield and side window demist outlets. When the defrost button is selected, the blower level may increase. Use Defrost mode with maximum temperature settings for best windshield and side window defrosting and defogging. When toggling the front defrost mode button, the climate system returns to the previous setting.
	Rear Defrost Button Press and release the button on the touchscreen, or push and release the button on the faceplate, to turn on the rear window defroster and the heated outside mirrors (if equipped). An indicator illuminates when the rear window defroster is on. The rear window defroster automatically turns off after ten minutes.
	Driver And Passenger Temperature Up And Down Buttons Provides the driver and passenger with independent temperature control. Push the red button on the faceplate or touchscreen or press and slide the temperature bar towards the red arrow button on the touchscreen for warmer temperature settings. Push the blue button on the faceplate or touchscreen or press and slide the temperature bar towards the blue arrow button on the touchscreen for cooler temperature settings.

Icon	Description
	SYNC Button Press the SYNC button on the touchscreen to toggle the SYNC feature on/off. The SYNC indicator is illuminated when this feature is enabled. SYNC is used to synchronize the passenger temperature setting with the driver temperature setting. Changing the passenger's temperature setting while in SYNC will automatically exit this feature. **NOTE:** The SYNC button is only available on the touchscreen.
Faceplate Knob **Touchscreen Buttons** 	**Blower Control** Blower Control is used to regulate the amount of air forced through the climate system. There are seven blower speeds available. The speeds can be selected using either the blower control knob on the faceplate or the buttons on the touchscreen. • **Faceplate:** The blower speed increases as you turn the blower control knob clockwise from the lowest blower setting. The blower speed decreases as you turn the blower control knob counterclockwise. • **Touchscreen:** Use the small blower icon to reduce the blower setting and the large blower icon to increase the blower setting. The blower can also be selected by pressing the blower bar area between the icons.
	Modes Control Press the button to adjust airflow distribution. The airflow distribution mode can be adjusted so air comes from the instrument panel outlets, floor outlets, defrost outlets and demist outlets.

Icon	Description
Panel Mode	**Panel Mode** Air comes from the outlets in the instrument panel. Each of these outlets can be individually adjusted to direct the flow of air. The air vanes of the center outlets and outboard outlets can be moved up and down or side to side to regulate airflow direction. There is a shut off wheel located below the air vanes to shut off or adjust the amount of airflow from these outlets.
Bi-Level Mode	**Bi-Level Mode** Air comes from the instrument panel outlets and floor outlets. A slight amount of air is directed through the defrost and side window demister outlets. **NOTE:** Bi-Level mode is designed under comfort conditions to provide cooler air out of the panel outlets and warmer air from the floor outlets.
Floor Mode	**Floor Mode** Air comes from the floor outlets. A slight amount of air is directed through the defrost and side window demister outlets.
Mix Mode	**Mix Mode** Air is directed through the floor, defrost, and side window demister outlets. This setting works best in cold or snowy conditions that require extra heat to the windshield. This setting is good for maintaining comfort while reducing moisture on the windshield.
OFF	**Climate Control OFF Button** This button turns the Climate Control System off.

Climate Control Functions

A/C (Air Conditioning)

The A/C (Air Conditioning) button allows the operator to manually activate or deactivate the air conditioning system. When the air conditioning system is turned on, cool dehumidified air will flow through the outlets into the cabin. For improved fuel economy, press the A/C button to turn off the air conditioning and manually adjust the blower and airflow mode settings. Also, make sure to select only Panel, Bi-Level, or Floor modes.

NOTE:

- For Manual Climate Controls, if the system is in Mix, Floor or Defrost mode, the A/C can be turned off, but the A/C system shall remain active to prevent fogging of the windows.
- If fog or mist appears on the windshield or side glass, select Defrost mode, and increase blower speed if needed.
- If A/C performance seems lower than expected, check the front of the A/C condenser (located in front of the radiator), for an accumulation of dirt or insects. Clean with a gentle water spray from the front of the radiator and through the condenser.

MAX A/C

MAX A/C sets the control for maximum cooling performance.

Press and release to toggle between MAX A/C and the prior settings. The button illuminates when MAX A/C is on.

In MAX A/C, the blower level and mode position can be adjusted to desired user settings. Pressing other settings will cause the MAX A/C operation to switch to the selected setting and MAX A/C to exit.

Recirculation

In cold weather, use of Recirculation mode may lead to excessive window fogging. The Recirculation feature may be unavailable (button on the touchscreen greyed out) if conditions exist that could create fogging on the inside of the windshield.

On systems with Manual Climate Controls, if equipped, the Recirculation mode is not allowed in Defrost mode to improve window clearing operation. Recirculation is disabled automatically if this mode is selected. Attempting to use Recirculation while in this mode causes the LED in the control button to blink and then turns off.

Automatic Temperature Control (ATC) — If Equipped

Automatic Operation

1. Push the AUTO button on the faceplate, or the AUTO button on the touchscreen on the Automatic Temperature Control (ATC) Panel.
2. Next, adjust the temperature that you would like the system to maintain by adjusting the driver and passenger temperature control buttons. Once the desired temperature is displayed, the system will achieve and automatically maintain that comfort level.
3. When the system is set up for your comfort level, it is not necessary to change the settings. You will experience the greatest efficiency by simply allowing the system to function automatically.

NOTE:

- It is not necessary to move the temperature settings for cold or hot vehicles. The system automatically adjusts the temperature, mode, and blower speed to provide comfort as quickly as possible.
- The temperature can be displayed in U.S. or Metric units by selecting the US/Metric customer-programmable feature. Refer to the "Uconnect Settings" in "Multimedia" for further information.

To provide you with maximum comfort in the Automatic mode during cold start-ups, the blower fan will remain on low until the engine warms up. The blower will increase in speed and transition into Auto mode.

Manual Operation Override

This system offers a full complement of manual override features. The AUTO symbol in the front ATC display will be turned off when the system is being used in the manual mode.

Operating Tips

NOTE:
Refer to the chart at the end of this section for suggested control settings for various weather conditions.

Summer Operation

The engine cooling system must be protected with a high-quality antifreeze coolant to provide proper corrosion protection and to protect against engine overheating. OAT coolant (conforming to MS.90032) is recommended.

Winter Operation

To ensure the best possible heater and defroster performance, make sure the engine cooling system is functioning properly and the proper amount, type, and concentration of coolant is used. Use of the Air Recirculation mode during Winter months is not recommended, because it may cause window fogging.

Vacation/Storage

Before you store your vehicle, or keep it out of service (i.e., vacation) for two weeks or more, run the air conditioning system at idle for about five minutes, in fresh air, with the blower setting on high. This will ensure adequate system lubrication to minimize the possibility of compressor damage when the system is started again.

Window Fogging

Vehicle windows tend to fog on the inside in mild, rainy, and/or humid weather. To clear the windows, select Defrost or Mix mode and increase the front blower speed. Do not use the Recirculation mode without A/C for long periods, as fogging may occur.

CAUTION!

Failure to follow these cautions can cause damage to the heating elements:

- **Use care when washing the inside of the rear window. Do not use abrasive window cleaners on the interior surface of the window. Use a soft cloth and a mild washing solution, wiping parallel to the heating elements. Labels can be peeled off after soaking with warm water.**
- **Do not use scrapers, sharp instruments, or abrasive window cleaners on the interior surface of the window.**
- **Keep all objects a safe distance from the window.**

Outside Air Intake

Make sure the air intake, located directly in front of the windshield, is free of obstructions, such as leaves. Leaves collected in the air intake may reduce airflow, and if they enter the plenum, they could plug the water drains. In Winter months, make sure the air intake is clear of ice, slush, and snow.

Cabin Air Filter

The Climate Control System filters out dust and pollen from the air. Contact an authorized dealer to service your cabin air filter, and to have it replaced when needed.

Operating Tips Chart

WEATHER	CONTROL SETTINGS
Hot Weather And Vehicle Interior Is Very Hot	Set the mode control to , A/C on, and blower on high. Roll down the windows for a minute to flush out the hot air. Adjust the controls as needed to achieve comfort.
Warm Weather	Turn A/C on and set the mode control to the position.
Cool Sunny	Operate in position.
Cool & Humid Conditions	Set the mode control to and turn on A/C to keep windows clear.
Cold Weather	Set the mode control to the position. If windshield fogging starts to occur, move the control to the position.

POWER WINDOWS — IF EQUIPPED

The power windows feature allows for movement of the windows with the push of a button. The power window switches are located on the instrument panel below the climate controls. Push the switch downward to open the window and pull upward to close the window.

The top left switch controls the left front window and the top right switch controls the right front window. The bottom left switch controls the left rear window and the bottom right switch controls the right rear window.

WARNING!
Never leave children unattended in a vehicle, and do not let children play with power windows. Do not leave the key fob in or near the vehicle, or in a location accessible to children. Occupants, particularly unattended children, can become entrapped by the windows while operating the power window switches. Such entrapment may result in serious injury or death.

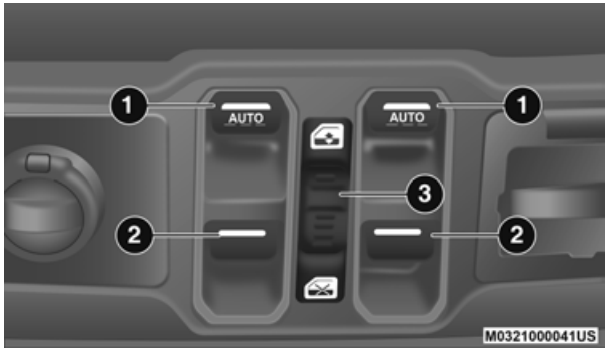

Power Window Switches

1 — Driver And Passenger Front Window Switches
2 — Driver And Passenger Rear Window Switches
3 — Window Lockout Switch

NOTE:

- The power window switches will remain active for up to 10 minutes after ignition is switched to the OFF position. Opening either front door will cancel this feature.
- There are window switches located on the rear of the center console for the rear passenger windows.

Auto-Down Feature

The driver door power window switch and the front passenger door power window switch have an Auto-Down feature. Push the window switch down, past the detent, and release and the window will go down automatically.

To open the window part way, push the window switch down briefly, without going past the detent, and release it when you want the window to stop.

To stop the window from going all the way down during the Auto-Down operation, pull up on the switch briefly.

WARNING!
There is no anti-pinch protection when the window is almost closed. Be sure to clear all objects from the window before closing.

Wind Buffeting

Wind buffeting can be described as the perception of pressure on the ears or a helicopter-type sound in the ears. Your vehicle may exhibit wind buffeting with the windows down in certain open or partially open positions. This is a normal occurrence and can be minimized by adjusting the window opening.

DUAL TOP — IF EQUIPPED

If your vehicle is equipped with a Dual Top, the soft top system will be provided in a separate box located in the bed of the vehicle for shipping purposes only.

NOTE:
The soft top and the hard top are to be used independently. Your vehicle warranty will not cover damage resulting from both tops being installed at the same time.

For your convenience, a tool kit is provided with your vehicle located in the center console. This kit includes the necessary tools required for the operations described in the following sections. All pieces fit into the ratchet for easy use.

Provided Tools

1 — #T50 Torx Head Driver
2 — #T40 Torx Head Driver
3 — 15 mm Socket
4 — Ratchet

Removing The Hard Top

1. Remove both front panels. Refer to "Front Panel(s) Removal" in "Freedom Top Three-Piece Modular Hard Top — If Equipped" for removal instructions.
2. Open both doors.
3. Using the provided #T50 Torx head driver and ratchet, remove the Torx head fastener that secures the hard top at the B-pillar (near the top of the front door) on each side.

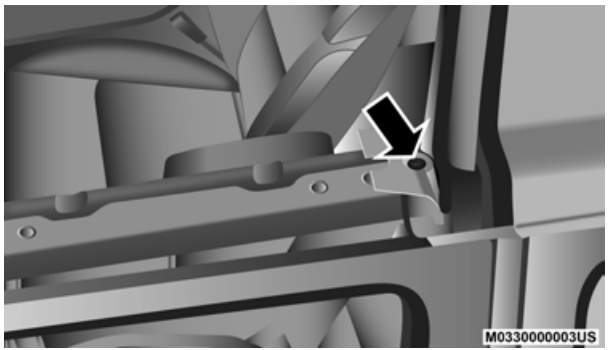

Torx Head Fastener Location — Left Side Shown

4. If equipped, remove the lower interior soft trim panel attached by the hook-and-loop fastener.

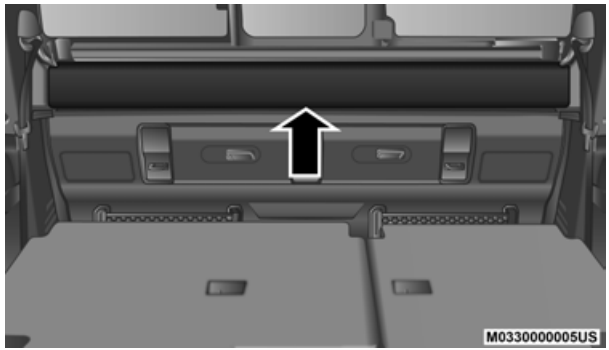

Interior Soft Trim Panel (If Equipped)

5. Remove the two Torx head fasteners that secure the hard top to the vehicle (along the interior bodyside rearward of the back doors) using the #T50 Torx head driver.

6. Remove the four Torx head fasteners that secure the hard top to the back of the vehicle cab using the #T50 Torx head driver.

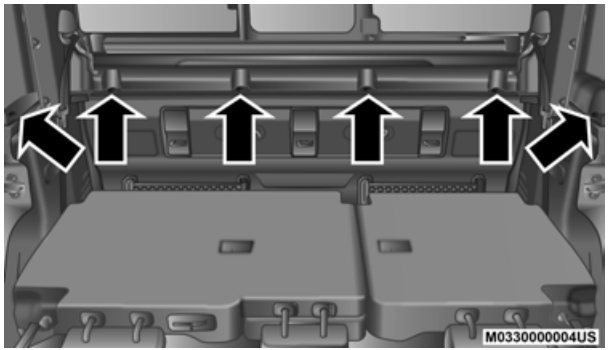

Torx Head Fastener Locations

7. Locate the wire harness on the left rear inside corner of the vehicle. To access the harness, remove the plastic cover by pushing on the side of the cover and sliding it off.

NOTE:
Do not force open; this will break the plastic cover.

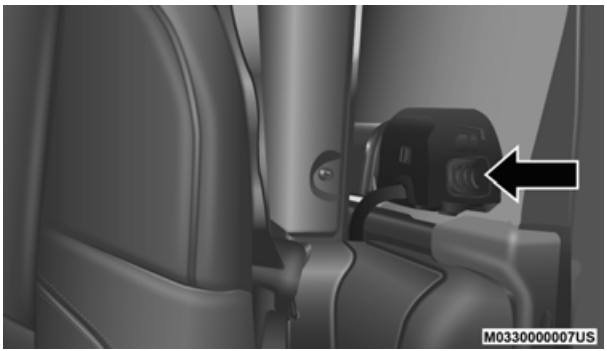

Step Seven

8. To release the wire harness, pull back on the red latch, then push down on the black button while pulling the harness out.

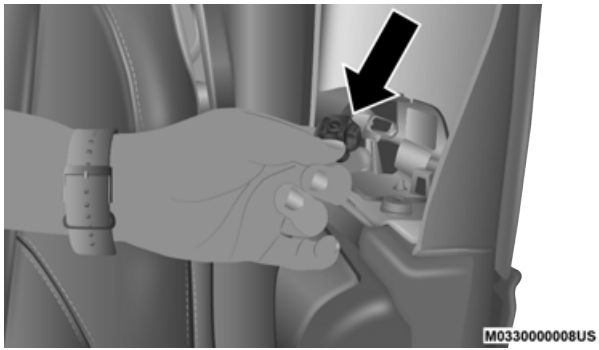

Pull Back On Red Latch

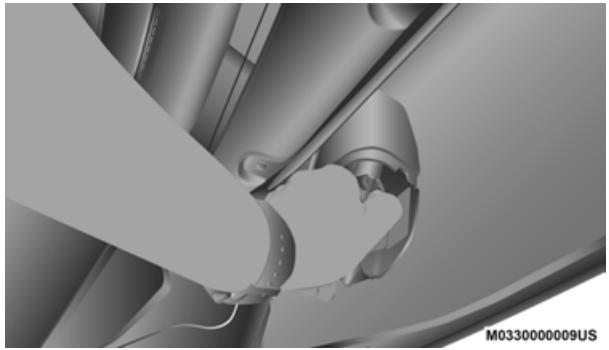

Push Black Button To Release

9. Remove the hard top from the vehicle. Install edge protectors and place the hard top on a soft surface to prevent damage.

CAUTION!
• **The front panel(s) must be positioned properly to ensure sealing. Improper installation can cause water to leak into the vehicle's interior.** • **The hard top assembly must be positioned properly to ensure sealing. Improper installation can cause water to leak into the vehicle's interior.**

(Continued)

CAUTION! *(Continued)*

- **The hard top is not designed to carry any additional loads, such as after-market roof racks, spare tires, building materials, hunting or camping supplies, etc. For optional Mopar accessory roof racks, refer to "Roof Luggage Rack" in "Getting To Know Your Vehicle."**
- **Do not move your vehicle until the top has been either fully attached to the windshield frame and bodyside, or fully removed.**
- **The removal of the hard top requires four adults located on each corner. Failure to follow this caution could damage the hard top.**

Installing The Hard Top

NOTE:
If the door frames are installed from soft top usage, they must be removed prior to installation of the hard top. Refer to "Door Frame" in this section for removal procedures.

1. Inspect the hard top seals for damage and replace if necessary.
2. Install the hard top using the same steps for removal in reverse order.

NOTE:
When reinstalling the interior soft trim panel:

- Be sure the panel is centered so that there is an even gap on both sides.
- Apply pressure over the hook-and-loop fasteners to ensure they are properly secured.

3. Make sure that the hard top is sitting flush with the body at the sides and across the back.

NOTE:
The Torx head fasteners that attach the hard top to the body should be torqued to 155 in-lb +/- 22 in-lb (17.5 N·m +/- 2.5 N·m) using the provided #T50 Torx head driver and ratchet.

CAUTION!

Do not overtighten Torx fasteners. Damage to the retainers will occur.

Installing The Soft Top

NOTE:

- The following procedures are for first time set up only. For future soft top procedures, refer to "Soft Top — If Equipped" in this section.
- A visual instruction sheet is also included with the vehicle that details the procedure below.

1. Locate and remove the following items prior to hard top removal:
   - Right and left side door frames
   - Rear belt rail
   - Eight door frame attachment Torx head fasteners
   - Right and left side quarter panel cover assemblies
   - Rear window
2. Remove the hard top. Refer to "Removing The Hard Top" in this section.
3. Install the belt rail on the rear of the vehicle. Secure the belt rail using the six fasteners with the provided #T50 Torx head driver and ratchet. Refer to the table below for recommended torque specifications.

Torque Specification For Torx Fastener	Maximum	Minimum
119.5 in-lbs	150.5 in-lbs	106.2 in-lbs
13.5 N·m	17.0 N·m	12.0 N·m

CAUTION!
Do not overtighten Torx fasteners. Damage to the retainers will occur.

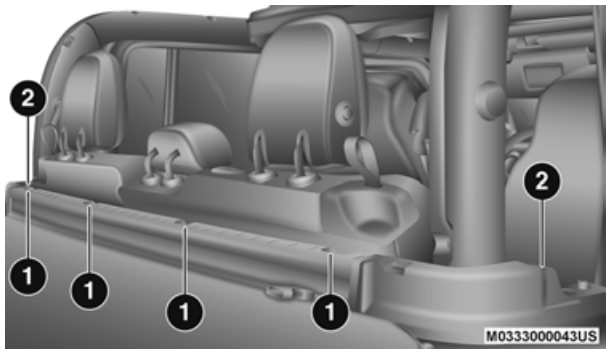

Belt Rail Fasteners

1 — Rear Fasteners
2 — Corner Fasteners

4. Remove the storage cover on the quarter trim. Use the emergency key blade to pry the cover open.

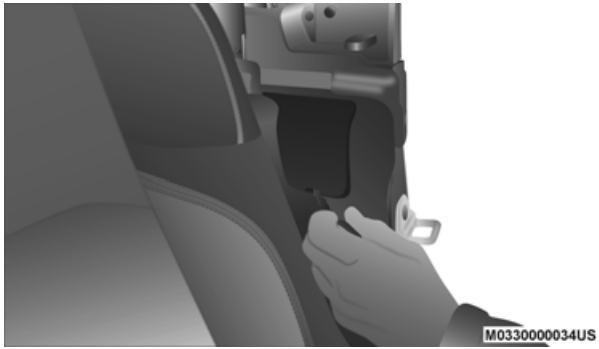

Pry Open Storage Cover

5. Tuck the wire harness inside the storage compartment.

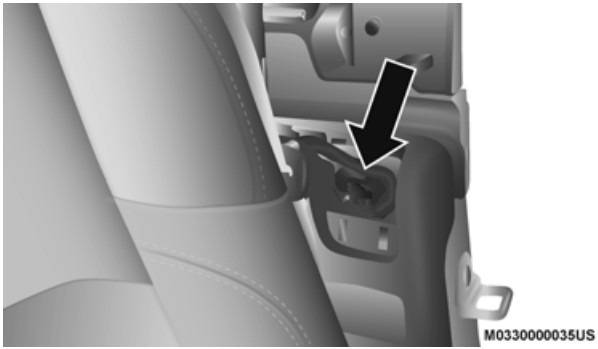

Correct Placement Of Wire Harness

NOTE:
Ensure the wire harness is not tucked under the belt rail or between the belt rail and the door rail.

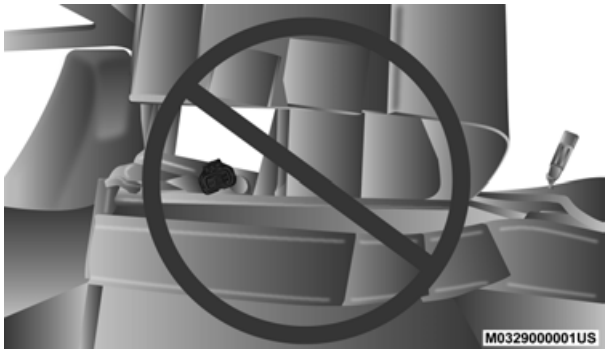

Incorrect Placement Of Wire Harness

6. Install the door frames. Start with both front doors, followed by both rear doors. Refer to "Door Frame Installation" in this section for instructions and appropriate torque specifications for the door frame Torx head fasteners.

CAUTION!
Failure to follow the next steps could result in damage to the soft top or vehicle.

7. Unsnap and remove the storage bag. This bag should be discarded. It was intended as a protective cover for shipping only.

8. Ensure the top is secured with the provided hook-and-loop fasteners, then lift the soft top onto the rear of the cab. Line up the locater pins (one on each side of the soft top) with the rear door frames.

9. Using the provided #T50 Torx head driver and ratchet, install and tighten the Torx fasteners by turning them clockwise. Secure them until they are snug, being careful not to cross-thread the fasteners or overtighten. Refer to the following table for recommended torque specifications. Repeat on the opposite side.

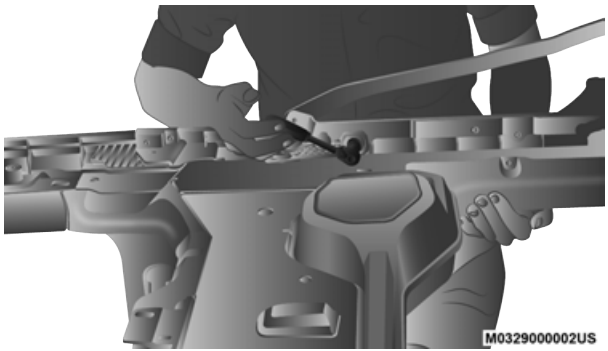

Step Seven

Torque Specification For Torx Fasteners	Maximum	Minimum
119.5 in-lbs	150.5 in-lbs	106.2 in-lbs
13.5 N·m	17.0 N·m	12.0 N·m

CAUTION!
Do not overtighten Torx fasteners. You can strip the fasteners if they are overtightened.

Soft Top In Place

10. Before driving the vehicle with the top in the Sunrider® position, ensure the top is secured with the provided hook-and-loop fasteners. For instructions on how to raise the soft top, refer to "Raising The Soft Top" in this section.

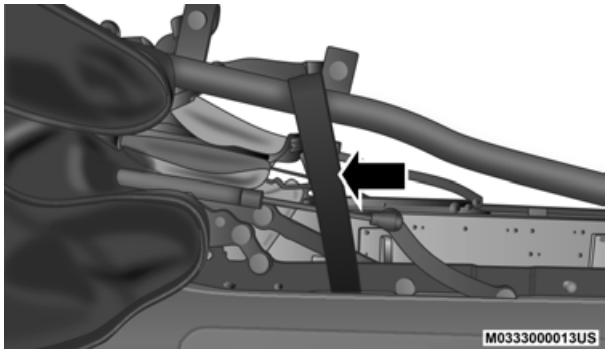

Secured Top In Sunrider® Position

Removing The Soft Top

1. Fully lower the soft top. Refer to "Lowering The Soft Top" in this section.

CAUTION!
Failure to follow the next steps could result in damage to the soft top or vehicle.

2. Using the provided #T50 Torx head driver and ratchet, unscrew the two Torx head fasteners on the inside of each top mechanism.

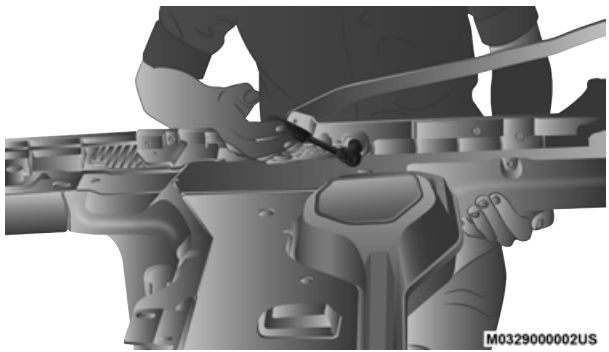

Step Two

3. Utilizing two people, lift the soft top up and away from the vehicle, careful to avoid the vehicle's sport bar and trim. Store the soft top in a safe, clean, and dry location.

4. Remove the door frames. The rear door frames must be removed before the front door frames. Refer to "Door Frame Removal" in "Getting To Know Your Vehicle" for removal instructions.

5. Using the provided #T50 Torx head driver and ratchet, unscrew the six Torx head fasteners on both rear corners and the back of the cab, then remove the belt rail.

NOTE:
Folding down the rear seats is recommended to provide easier access to the fasteners.

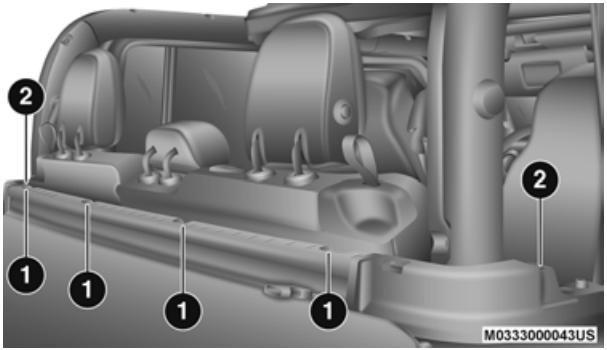

Belt Rail Fasteners

1 — Rear Fasteners
2 — Corner Fasteners

FREEDOM TOP THREE-PIECE MODULAR HARD TOP — IF EQUIPPED

CAUTION!

- **The hard top is not designed to carry any additional loads, such as after-market roof racks, spare tires, building materials, hunting or camping supplies, etc. For information on optional Mopar accessory roof racks, refer to "Roof Luggage Rack" in this section.**
- **Do not move your vehicle until the top has been either fully attached to the front header, sport bar, and body side, or fully removed.**

Failure to follow these cautions may cause interior water damage, stains or mildew:

- **It is recommended that the top be free of water prior to panel removal. Removing the top, opening a door, or lowering a window while the top is wet may allow water to drip into the vehicle's interior.**
- **The hard top assembly must be positioned properly to ensure sealing. Improper installation can cause water to leak into the vehicle's interior.**
- **Careless handling and storage of the removable roof panels may damage the seals, causing water to leak into the vehicle's interior.**

(Continued)

CAUTION! *(Continued)*

- **The front panel(s) must be positioned properly to ensure sealing. Improper installation can cause water to leak into the vehicle's interior.**

Front Panel(s) Removal

NOTE:
The left side panel must be removed before removing the right side panel.

1. Fold down the sun visor against the windshield.
2. Turn the three L-shaped locks on the left side panel (one at the front, the rear, and outside), unlocking them from the roof.

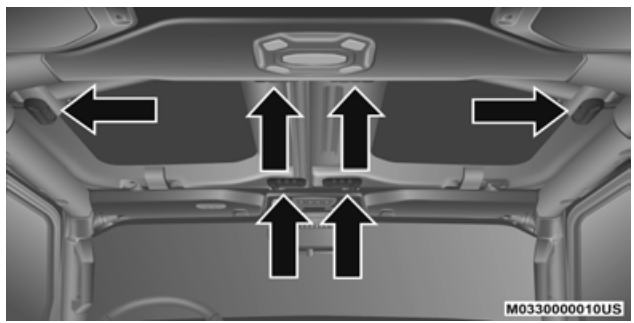

Roof Panel Lock Locations

3. Unlatch the left side header panel latch located at the top of the windshield.

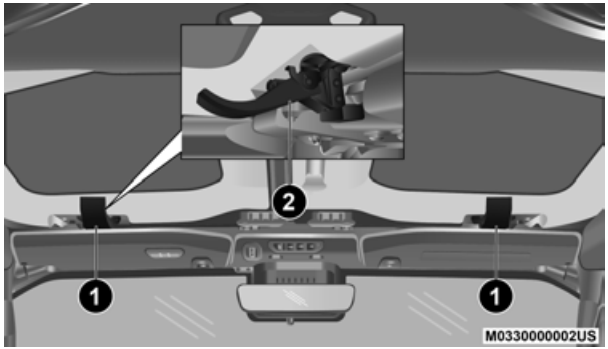

Header Panel Latch Locations

1 — Header Panel Latches
2 — Unlatched Position

4. Remove the left side panel.
5. Repeat the steps above to remove the right side panel.

Freedom Top Storage Bag

Vehicles equipped with a Freedom Top Modular Hard Top come with a Freedom Top storage bag that allows you to store your Freedom Top panels. The storage bag contains two compartments.

Lay the bag for the Freedom Top panels down so the loops and hooks are facing upward. Unzip the bag and fold back the outer flap.

NOTE:

- Ensure the front Freedom Top panel latch is closed prior to inserting the panel into the Freedom Top bag.
- There is a pouch located on the front of the bag to store the hard top edge protector that is used when the hard top is not installed on the vehicle.

1. Insert the left side Freedom Top panel into the bag with the latches facing upward.

Left Panel — Latches Facing Upward

2. Unfold the black panel divider (ensure the divider is laying flat).

Fold Divider Over Left Panel

3. Insert the right side Freedom Top panel into the bag with the latches facing downward.

Right Panel — Latches Facing Downward

NOTE:
Ensure the front Freedom Top panel latch is closed prior to inserting the panel into the bag.

4. Unfold the outer flap and zip the Freedom Top bag closed.

Storage Bag Closed

5. Store the Freedom Top bag in a safe location.

Front Panel(s) Installation

1. Set the right side panel on the windshield frame with the locating pin in the front receiver mounting hole, followed by the left side panel, making sure there is no overhang. Make sure that the panels are sitting flush with the body.

2. Secure the panel(s) using the same steps for removal in reverse order.

NOTE:
To prevent water leaks, the seals and Freedom Top Panels should be clear of any dust and debris prior to reinstallation.

Rear Hard Top Removal

1. Remove both front panels. Refer to "Front Panel(s) Removal" in this section.

2. Open both front doors.

3. Using the provided #T50 Torx head driver and ratchet, remove the two Torx head fasteners that secure the hard top at the B-pillar (near the top of the front doors) on each side.

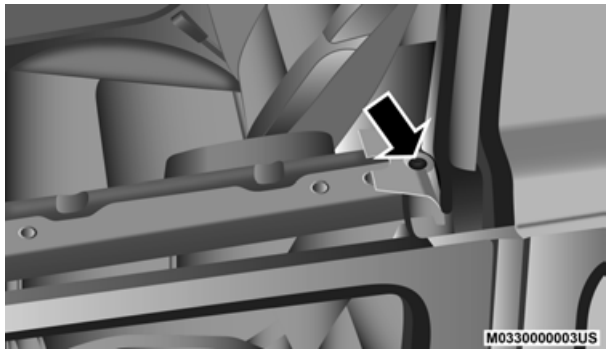

Torx Head Fastener Location — Left Side Shown

4. If equipped, remove the rear lower interior soft trim panel attached by a hook-and-loop fastener.

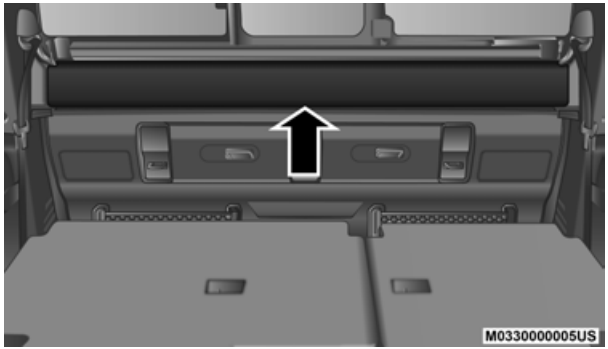

Interior Soft Trim Panel (If Equipped)

5. Remove the two Torx head fasteners that secure the hard top to the vehicle (along the interior bodyside rearward of the back doors) using the #T50 Torx head driver.

6. Remove the four Torx head fasteners that secure the hard top to the back of the vehicle cab using the #T50 Torx head driver.

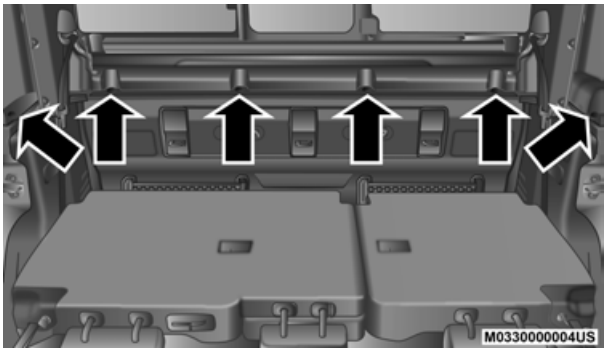

Torx Head Fastener Locations

7. Locate the wire harness on the left rear inside corner of the vehicle. To access the harness, remove the plastic cover by pushing on the side of the cover and sliding it off.

NOTE:
Do not force open; this will break the plastic cover.

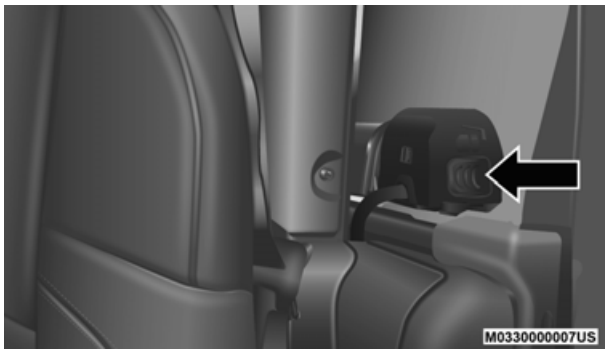

Step Seven

8. To release the wire harness, pull back on the red latch, then push down on the black button while pulling the harness out.

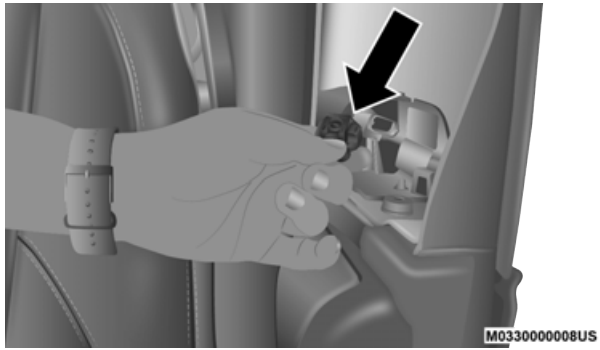

Pull Back On Red Latch

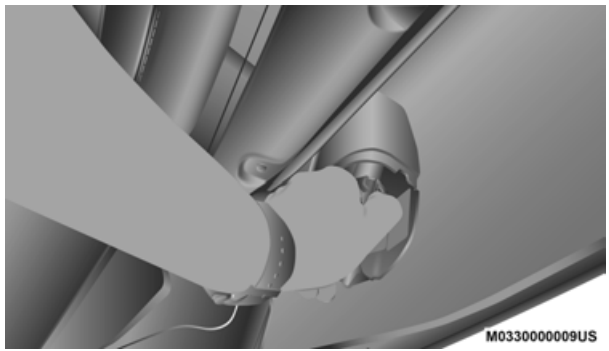

Push Black Button To Release

9. Remove the hard top from the vehicle. Install the edge protectors and place the hard top on a soft surface to prevent damage.

CAUTION!
The removal of the hard top requires four adults located on each corner. Failure to follow this caution could damage the hard top.

Rear Hard Top Installation

NOTE:
If the door frames are installed from soft top usage, they must be removed prior to installation of the hard top. Refer to "Door Frame" in this section for removal procedures.

1. Inspect the hard top seals for damage and replace if necessary.
2. Install the hard top using the same steps for removal in reverse order.

NOTE:
When reinstalling the interior soft trim panel:

- Be sure the panel is centered so that there is an even gap on both sides.
- Apply pressure over the hook-and-loop fasteners to ensure they are properly secured.

3. Make sure that the hard top is sitting flush with the body at the sides and across the back.

NOTE:
The Torx fasteners that attach the hard top to the body should be torqued to 155 in-lb +/- 22 in-lb (17.5 N·m +/- 2.5 N·m) using the provided #T50 Torx head driver and ratchet.

CAUTION!
Do not overtighten Torx fasteners. Damage to the retainers will occur.

DOOR FRAME

WARNING!

- **Do not drive your vehicle on public roads with the door frame(s) removed as you will lose the protection that they can provide. This procedure is furnished for use during off-road operation only.**
- **Do not drive your vehicle on public roads with the doors removed as you will lose the protection that they can provide. This procedure is furnished for use during off-road operation only.**

CAUTION!

Failure to follow these cautions may cause interior water damage, stains or mildew:

- **Opening a door or lowering a window while the top is wet may allow water to drip into the vehicle's interior.**
- **Careless handling and storage of the removable door frame(s) may damage the seals, causing water to leak into the vehicle's interior.**
- **The door frame(s) must be positioned properly to ensure sealing. Improper installation can cause water to leak into the vehicle's interior.**

Door Frame Removal

NOTE:
The rear door frames must be removed first, followed by the front door frames.

1. Using the provided #T40 Torx head driver and ratchet, loosen the Torx head fasteners located on the underside of each door hinge (two per door).

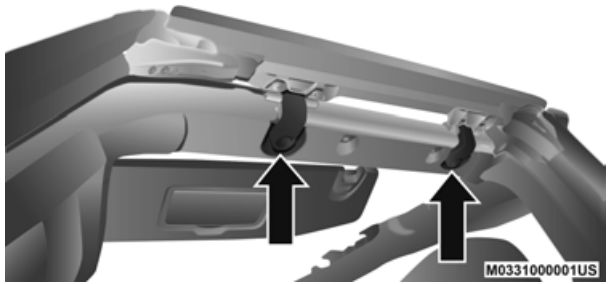

Door Frame Torx Head Fastener Locations

2. Once all the way loosened, remove the Torx head fasteners by pulling downward.

NOTE:
The fasteners will not fall out once completely loose, as they are held in place by an internal mechanism.

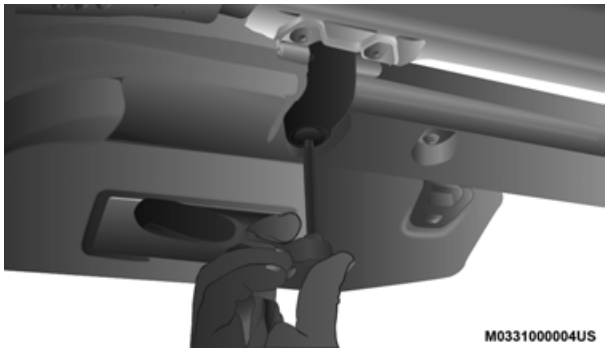

Remove Fasteners From Below Frame

3. Lift the frame upward, removing it from the vehicle.

Step Three

4. Store the fasteners in a secure location.

5. Repeat the procedure on the front door frame.

WARNING!
Do not drive your vehicle on public roads with the door and/or door frame(s) removed as you will lose the protection that they can provide. This procedure is furnished for use during off-road operation only.

Door Frame Installation

NOTE:
The door frames (if equipped with a soft top) can be installed when the doors are attached or removed.

1. Install the front door frame first.
2. Ensure the windshield is in the "up" position. Carefully place the front door frame in the rubber seal at the top of the windshield, and line up the holes for the Torx head fasteners (two for each door).
3. Swing the frame bracket around the side of the door frame, and insert the fasteners from underneath. Tighten with the #T40 Torx head driver until they are snug, being careful not to cross-thread the fasteners or overtighten. Refer to the following table for the appropriate torque specifications for the door frame fasteners.

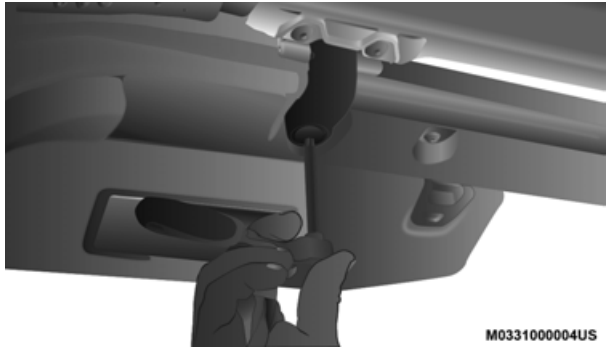

Tighten Fasteners

Torque Specification For Torx Fasteners	Maximum	Minimum
8.8 in-lbs	11.0 in-lbs	6.6 in-lbs
12 N·m	15 N·m	5 N·m

CAUTION!
Do not overtighten Torx fasteners. You can strip the fasteners if they are overtightened.

4. Set the rear door frame pin into the hole on top of the body side, just behind the rear door opening.

5. Carefully position the top of the door frame onto the rear belt rail and the rear of the front door frame, making sure the rubber seals lay flat. Ensure the seals are installed correctly to avoid water leaks.

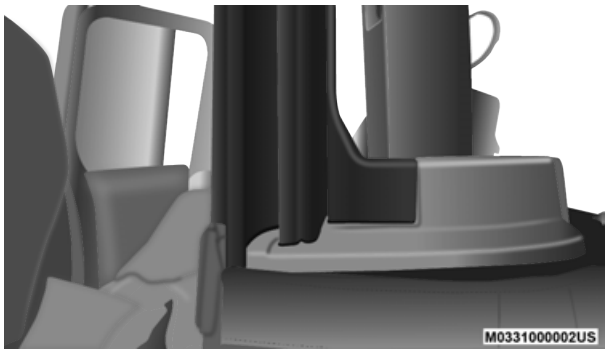

Position Of Frame Above Belt Rail

Position Of Rear Frame On Front Frame

6. Insert the fasteners from underneath. Tighten with the #T40 Torx head driver until they are snug, being careful not to cross-thread the fasteners or overtighten. Refer to the previous table for the appropriate torque specifications for the door frame fasteners.

SOFT TOP — IF EQUIPPED

WARNING!

- **The fabric quarter panel cover assemblies, rear window, and fabric top are designed only for protection against the elements. Do not rely on them to contain occupants within the vehicle or to protect against injury during an accident. Remember, always wear seat belts.**
- **Make sure hands and fingers are clear of all pinch points when installing and removing the soft top. The side bows may cause serious injury if fingers or hands get caught in-between.**

CAUTION!

The soft top is not designed to carry any additional loads such as roof racks, spare tires, building, hunting or camping supplies, and/or luggage, etc. Also, it was not designed as a structural member of the vehicle and, thus, cannot properly carry any additional loads other than environmental (rain, snow, etc.).

If the temperature is below 72°F (24°C) and/or the top has been folded down for a period of time, the top will appear to have shrunk when you raise it, making it difficult to put up. This is caused by a natural contraction of the vinyl or acrylic materials of the fabric top.

Place the vehicle in a warm area. Pull steadily on the top fabric. The vinyl will stretch back to its original size and the top can then be installed. **If the temperature is 41°F (5°C) or below, do not attempt to put the top down or roll the rear or side curtains.**

CAUTION!

- **Do not run a fabric top through an automatic car wash. Window scratches and wax build up may result.**
- **Do not lower the top when the temperature is below 41°F (5°C). Damage to the top may result.**
- **Do not move your vehicle until the top has been either fully attached to the windshield frame, or fully lowered.**
- **Do not lower the top with the windows installed. Window and top damage may occur.**

(Continued)

CAUTION! *(Continued)*

- **Refer to "Appearance Care For Fabric Top Models" in "Bodywork" in "Servicing And Maintenance" for further information. It contains important information on cleaning and caring for your vehicle's fabric top.**
- **Do not use any tools (screwdrivers, etc.) to pry or force any of the clamps, clips, or retainers securing the soft top. Do not force or pry the soft top framework when opening or closing. Damage to the top may result.**

(Continued)

CAUTION! *(Continued)*

Failure to follow these cautions may cause interior water damage, stains, or mildew on the top material:

- **It is recommended that the top be free of water prior to opening it. Operating the top, opening a door or lowering a window while the top is wet may allow water to drip into the vehicle's interior.**
- **Careless handling and storage of the soft top may damage the seals, causing water to leak into the vehicle's interior.**
- **The soft top must be positioned properly to ensure sealing. Improper installation can cause water to leak into the vehicle's interior.**

Lowering The Soft Top

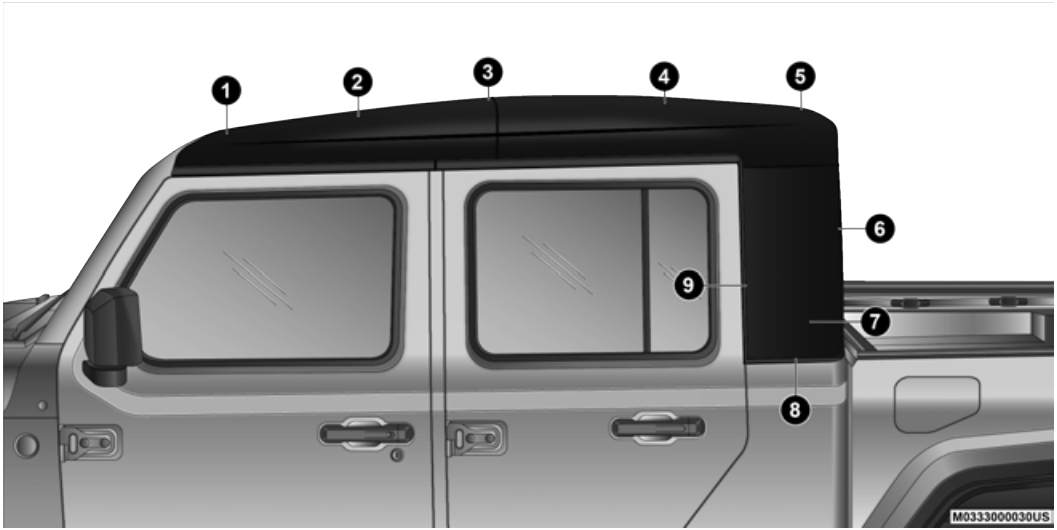

Side View Top And Components

1 —#1 Bow
2 —#2 Bow
3 — #3 Bow
4 — #4 Bow
5 — #5 Bow
6 — Rear Window Vertical Retainer
7 — Quarter Panel Cover Assembly
8 — Quarter Panel Lower Retainer
9 — Quarter Panel Vertical Retainer

Remove The Rear Window:

1. Use the two straps located on the bottom of each side of the rear window to remove the right and left vertical retainers, as well as the lower center retainer.

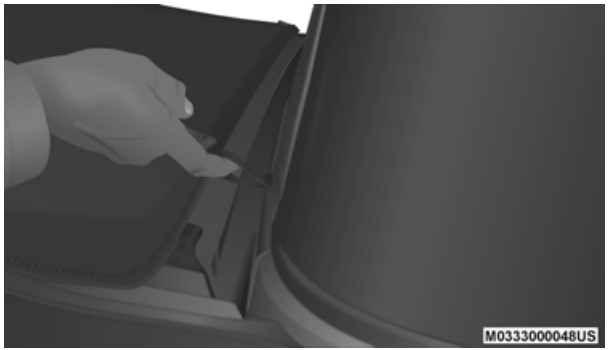

Step One (Right Side Shown)

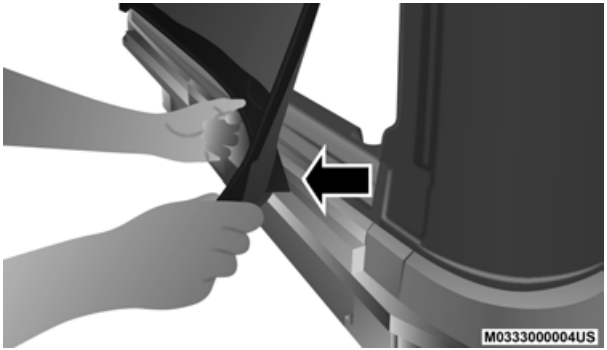

Remove Lower Center Retainer

2. While keeping the rear window level, slide it outward in either direction until it is completely separate from its retainer. **Do not pull downward while removing the rear window. Damage to the retainer could result.** Store the rear window in the soft top rear window storage bag. Refer to "Soft Top Rear Window Storage Bag" in this section for further information.

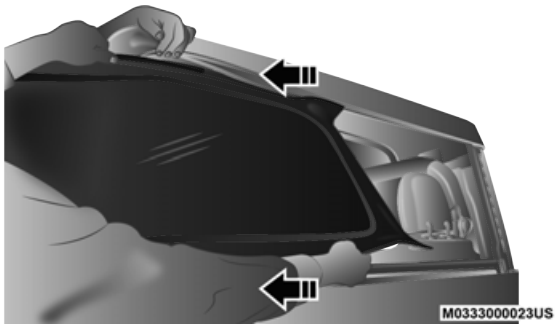

Remove Rear Window

Remove The Right And Left Quarter Panel Cover Assemblies:

1. Starting with either side, start to disengage the quarter panel cover assembly from the bottom by pulling the fabric at the bottom upward.
2. With two hands, grasp the front of the quarter panel cover assembly and pull outward to disengage it from its retainer on the door frame.

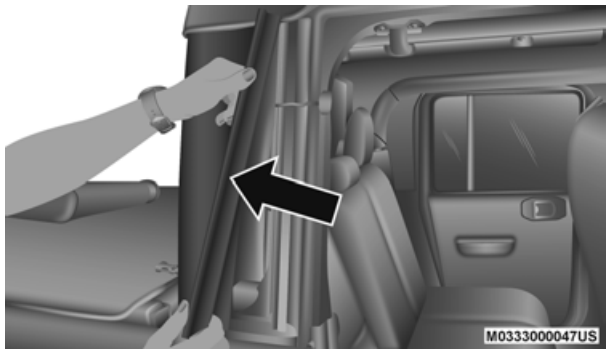

Step Two

3. Pull the quarter panel cover assembly up and out from the bottom, then pull it down and away from the vehicle to remove.

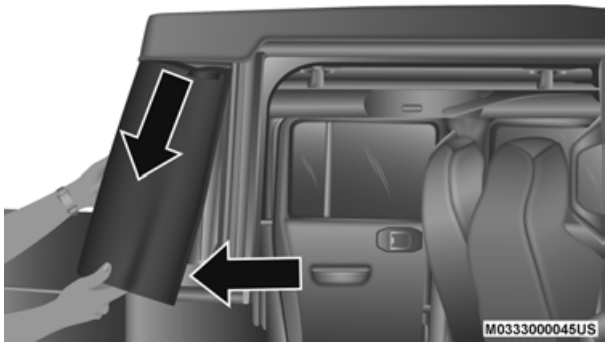

Step Three

4. Repeat this procedure for the other quarter panel cover assembly. Store the quarter panels in the soft top rear window storage bag. Refer to "Soft Top Rear Window Storage Bag" in this section for further information.

CAUTION!
Quarter windows and rear window must be either all in or all out.

Lowering The Soft Top Into The Sunrider® Position:

1. After removing the rear window and quarter panel cover assemblies, move to the front of the vehicle.
2. Fold both sun visors forward against the windshield.
3. Release the header latches from the crossbar by pulling the handle downward. Make sure the hook is fully disengaged from its receiver.

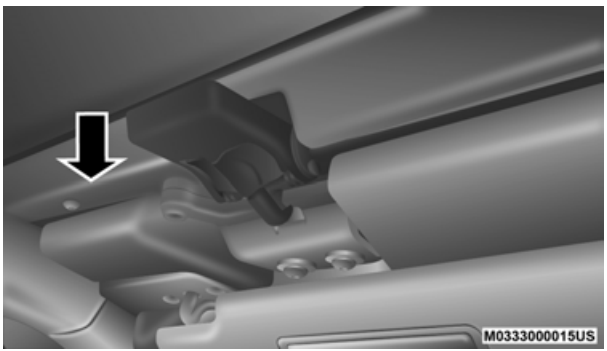

Step Three

4. From both the left and right sides, lift up on the #1 Bow of the soft top to begin the operation. It is best to utilize two people for this procedure.

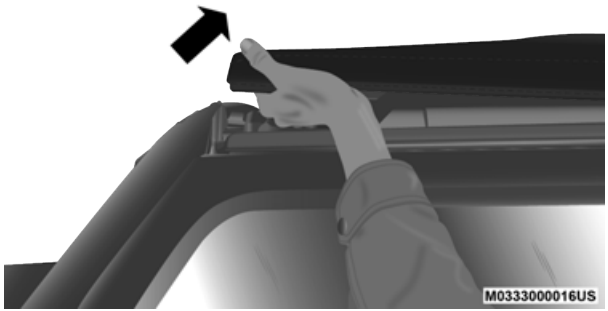

Step Four

5. Move to the side of the vehicle and use the side link to fold the soft top rearward.

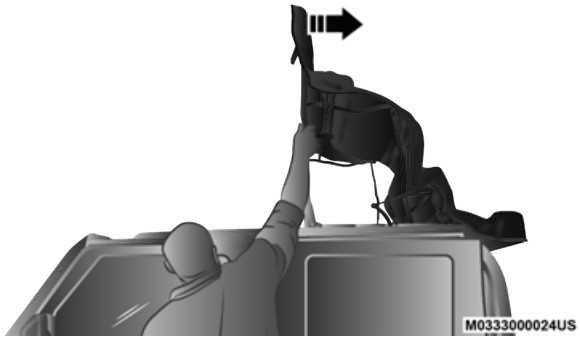

Fold Soft Top Rearward

NOTE:
Secure the top in this position by using the two hook-and-loop fasteners provided in the center console.

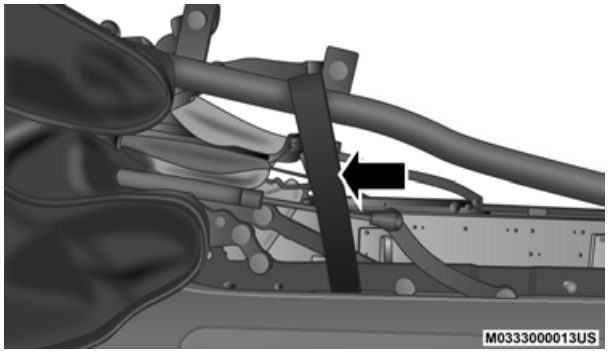

Secured Top In Sunrider® Position

Soft Top Rear Window Storage Bag

To safely store the soft top rear window, proceed as follows:

NOTE:
The rear belt rail, once removed from the rear window, **does not** store in the soft top rear window storage bag.

1. With the bag opened completely, fold the fabric divider downward and lay the rear window in the bottom of the bag.

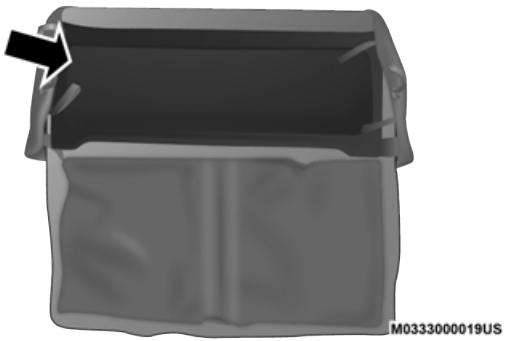

Step One

2. Fold the divider upward, covering the rear window.

Step Two

3. Lay the first quarter panel cover assembly all the way to the right side and the second quarter panel cover assembly on the left side. Secure both using the two hook-and-loop fastener straps on each side.

NOTE:
The quarter panel cover assemblies are marked “1” and “2” on the inside of the panel assembly.

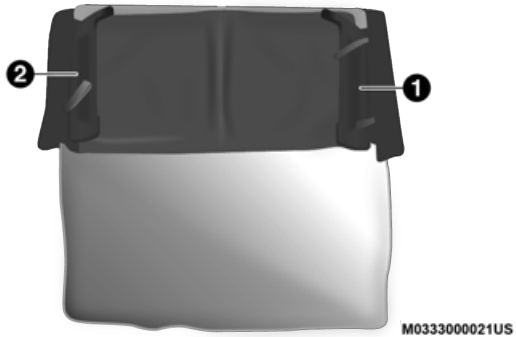

Step Three

1 — Right Quarter Panel Assembly
2 — Left Quarter Panel Assembly

4. Close the storage bag and store in a safe location.

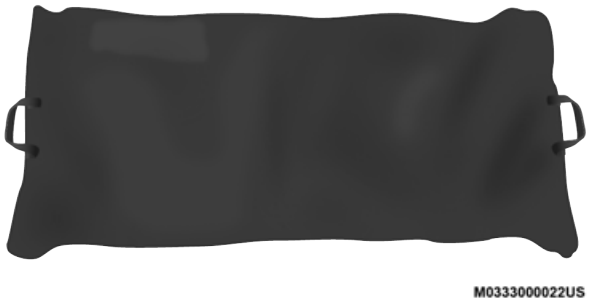

Step Four

Raising The Soft Top

1. From the Sunrider® Position, remove straps if previously secured.

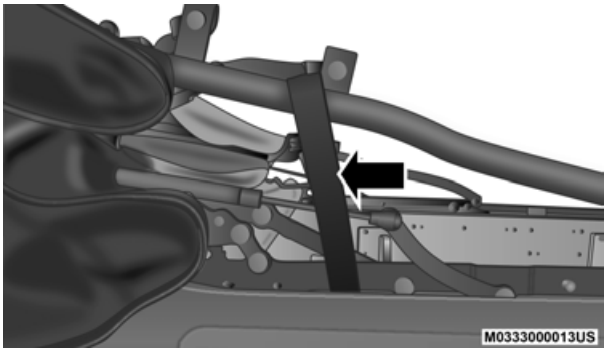

Securing Strap

CAUTION!
Failure to follow the next steps could result in damage to the soft top or vehicle.

2. Using the side link, lift and push the soft top toward the front of the vehicle, manually guiding the top into the closed position.

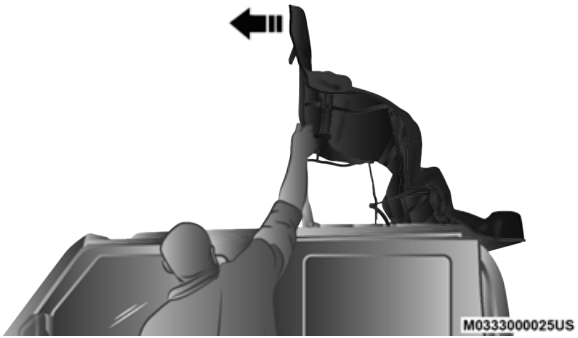

Fold Soft Top Toward Front Of Vehicle

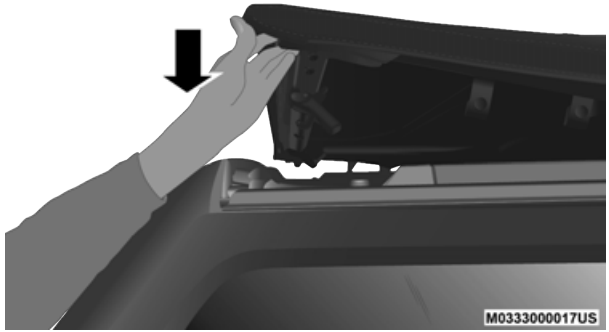

Lower Top Into Closed Position

3. From inside the vehicle, pull the handle on the header latch downward to engage the hook into its receiver.

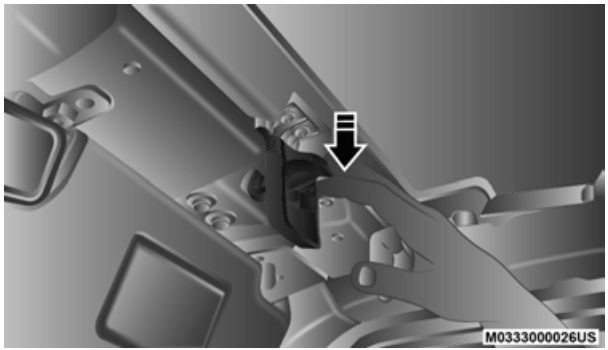

Step Three

4. Pull the handle back upward while squeezing the hook, locking the latch into place.

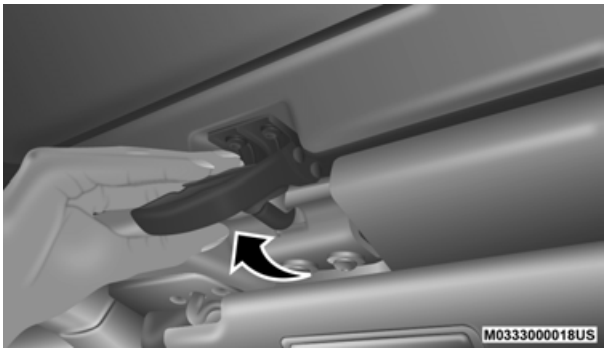

Step Four

5. Repeat steps three and four on the other side.

Install The Right And Left Quarter Panel Cover Assemblies:

1. Guide the top of the quarter panel cover assembly up into the retainer.

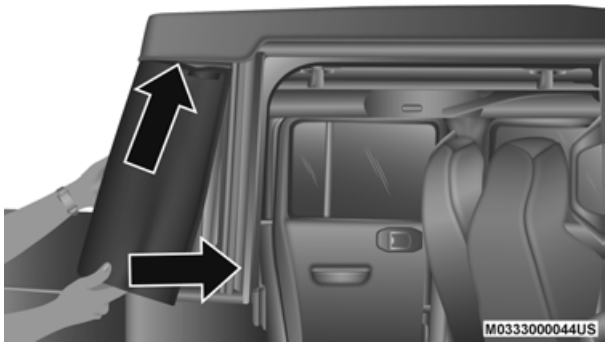

Step One

2. Engage the plastic retainers on the front of the cover assembly (toward the front of the vehicle) starting at the top, and working downward.

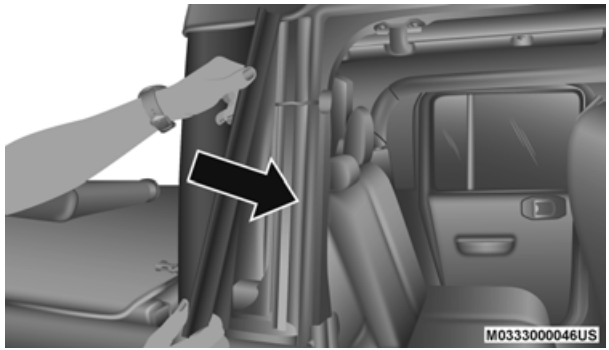

Step Two

NOTE:
It is critical that the retainers are fully engaged before the vehicle resumes motion.

3. Secure the hook-and-loop fastener at the upper front corner of each quarter panel cover by pressing firmly.

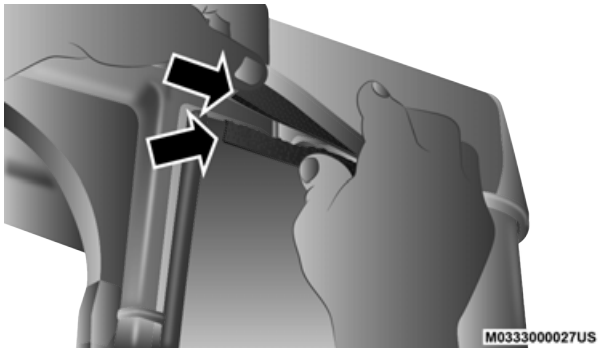

Quarter Panel Hook-And-Loop Fastener

Install The Rear Window

1. From either side, guide the rear window into the retainer while keeping the window level.

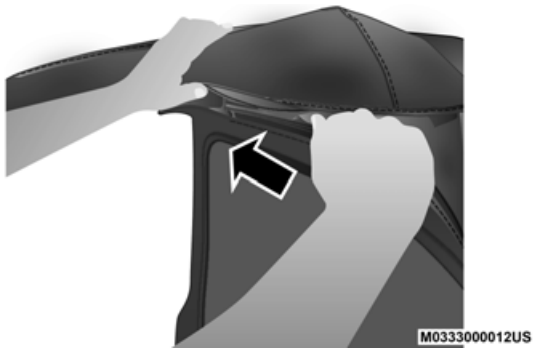

Step One

2. Engage the retainer along the bottom of the rear window beginning on the left side of the vehicle and working toward the center. Then, move to the right side of the vehicle and continue from the center, working to the right until the rear window is secured in the lower retainer.

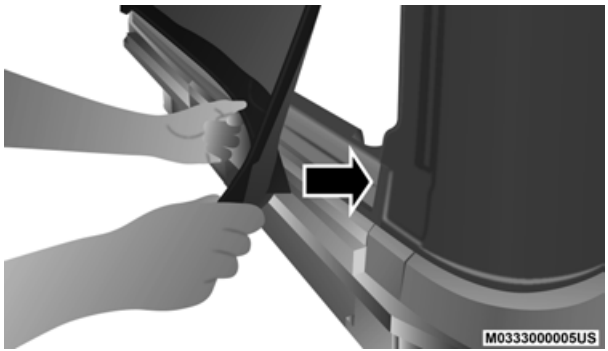

Step Two

3. Engage the vertical retainers up the right and left side of the rear window.

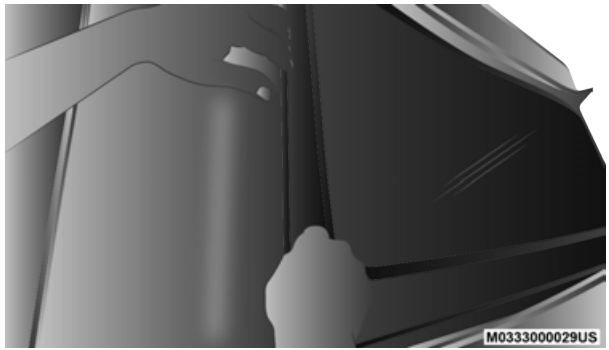

Engage Vertical Retainers (Left Side Shown)

4. Tuck the rear window under the soft top fabric and press firmly.

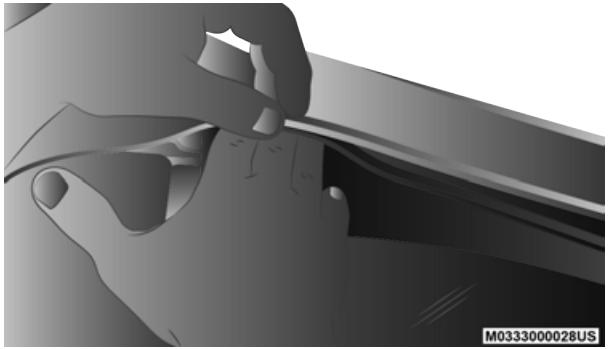

Tuck Rear Window Under Soft Top Fabric

5. Engage the rear window retainers in the lower right and left corners.

CAUTION!
Quarter windows and rear window must be either all in or all out.

NOTE:
For information on removing your soft top, refer to "Removing The Soft Top" in "Getting To Know Your Vehicle".

FOLDING WINDSHIELD

The fold-down windshield on your vehicle is a structural element that can provide some protection in some accidents. The windshield also provides some protection against weather, road debris and intrusion of small branches and other objects.

Do not drive your vehicle on-road with the windshield down, as you lose the protection this structural element can provide.

If required for certain off-road uses, the windshield can be folded down. However, the protection afforded by the windshield is then lost. If you fold down the windshield, drive slowly and cautiously. It is recommended that the speed of the vehicle be limited to 10 mph (16 km/h), with low range operation preferred if you are driving off-road with the windshield folded down.

Raise the windshield as soon as the task that required its removal is completed and before you return to on-road driving. Both you and your passengers should wear seat belts at all times, on-road and off-road, regardless of whether the windshield is raised or folded down.

Outside rearview mirrors are mounted on the doors. If you choose to remove the doors, see an authorized dealer for a replacement cowl-mounted outside mirror. Federal law requires outside mirrors on vehicles for on-road use.

WARNING!

Carefully follow these warnings to help protect against personal injury:

- **Do not drive your vehicle on-road with the windshield down.**
- **Do not drive your vehicle unless the windshield is securely fastened, either up or down.**
- **Eye protection, such as goggles, should be worn at all times when the windshield is down.**

(Continued)

WARNING! ***(Continued)***

- **Be sure that you carefully follow the instructions for raising the windshield. Make sure that the folding windshield, windshield wipers, side bars, and all associated hardware and fasteners are correctly and tightly assembled before driving your vehicle. Failure to follow these instructions may prevent your vehicle from providing you and your passengers' protection in some accidents.**
- **If you remove the doors, store them outside the vehicle. In the event of an accident, a loose door may cause personal injury.**

Lowering The Windshield

1. Before completing the steps below:
   - If your vehicle is equipped with a soft top, the top **MUST** be lowered, and the door frames must be removed prior to lowering the windshield.
   - If your vehicle is equipped with a hard top, the Freedom Panels **MUST** be removed prior to lowering the windshield.
   - Refer to the "Soft Top," "Door Frame," and "Freedom Top" instructions in this section for more information.

CAUTION!
Failure to follow this step will cause damage to the vehicle's header seal.

2. Manually remove the protective caps over the windshield wiper hex bolts.

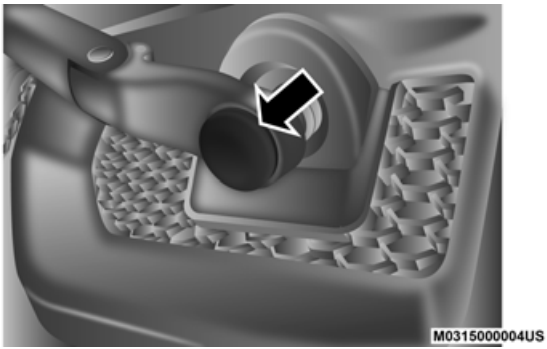

Protective Cap Over Wiper Bolt

3. Using the provided 15 mm socket, remove the two hex bolts and remove the wiper arms.

4. Move to the inside of the vehicle and lower both sun visors.

5. Using the provided #T40 Torx head driver, remove the four Torx head fasteners located along the interior of the windshield.

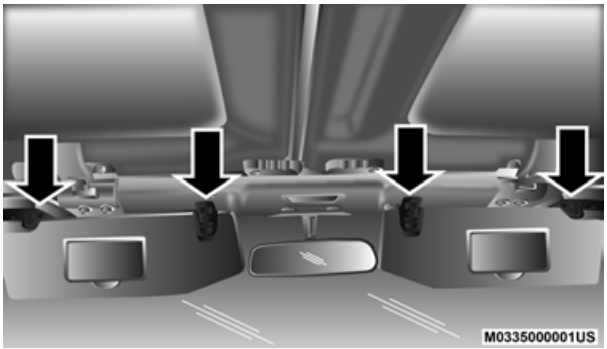

Interior Torx Head Fastener Locations

NOTE:
Store all of the mounting bolts in their original threaded holes and tighten for safekeeping.

6. Lower the windshield gently until it contacts the footman loop bumpers (if equipped).

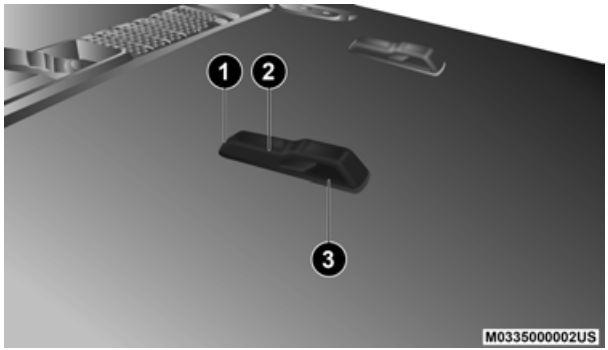

Footman Loop Bumpers

1 — Washer Nozzle
2 — Bumper
3 — Footman Loop

7. Secure the windshield by passing a cinch strap through the footman loops on either side of the hood and on the windshield frame. Tighten the strap to secure the windshield in place.

CAUTION!
Do Not Overtighten! Damage to the windshield could result.

ACC/FCW Sensor Protective Cover — If Equipped

Your vehicle may be equipped with a protective cover that is to be used whenever the windshield is folded down in order to protect the ACC/FCW sensor. To install the cover, follow the instructions below:

1. Secure the top part of the cover so that it hinges to the header.
2. Swing the cover down and push on it so that it covers the opening.
3. Check to make sure the cover is secured properly.

NOTE:
Be sure to remove the cover before returning the windshield to the normal position. Store the cover in the cargo area.

Cleaning Instructions

During windshield down applications, dust/dirt can accumulate in the cover and block the camera lens. Use a microfiber cloth to clean the camera lens, module, and inside cover, being careful not to damage or scratch the module.

Raising The Windshield

1. Release the strap that secured the windshield in the lowered position.
2. Raise the windshield.
3. Using the provided #T40 Torx head driver, reinstall the four Torx head fasteners located along the interior of the windshield. Secure them until they are snug, being careful not to cross-thread the fasteners or overtighten.

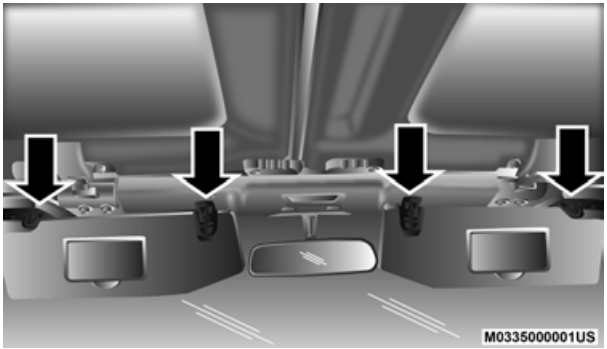

Interior Torx Head Fastener Locations

4. Reinstall the windshield wiper arms using the provided 15 mm socket. First, align the tips of the blade to the “T” mark in the glass. Then, while holding the arm in that position, reinstall the hex nut and tighten until snug. Be careful not to overtighten. Repeat for the other arm.

5. Replace the protective caps over the wiper arm hex bolts and push gently until they snap into place.

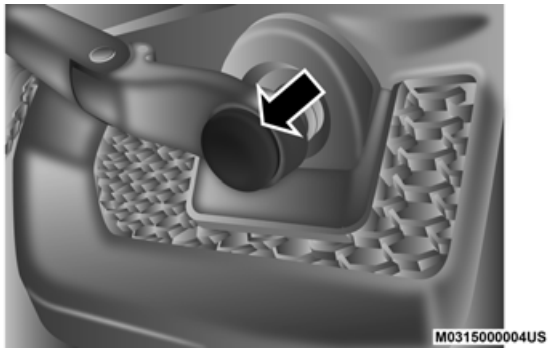

Protective Cap Over Wiper Bolt

6. After completing the steps above:
   - If your vehicle is equipped with a soft top, reinstall the door frames and raise the top.
   - If your vehicle is equipped with a hard top, reinstall the Freedom Panels.

HOOD

Opening The Hood

Release both the hood latches.

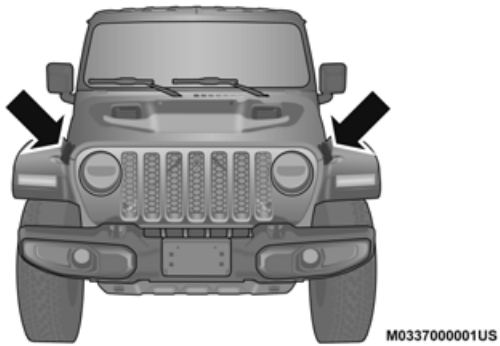

Hood Latch Locations

Raise the hood and locate the safety latch, located in the middle of the hood opening. Push the safety latch to the left side of the vehicle to open the hood. You may have to push down slightly on the hood before pushing the safety latch. Remove support rod from the hood, and insert into the radiator crossmember.

Closing The Hood

To close the hood, remove the support rod from the radiator crossmember, and install into the clip on the hood. Lower the hood slowly. Secure both of the hood latches.

WARNING!
Be sure the hood is fully latched before driving your vehicle. If the hood is not fully latched, it could open when the vehicle is in motion and block your vision. Failure to follow this warning could result in serious injury or death.

TAILGATE

Opening

Tailgate Release Handle

To open the tailgate, pull the release handle located on the center of the tailgate and guide it to the lowered position.

The tailgate is dampened to provide a slower, more controlled lowering.

Three-Position Tailgate

The vehicle's tailgate can be set to three positions: open, mid, or closed. The mid position can be used to provide a loading surface for transporting sheet goods.

To use the mid position, open the tailgate and lower it to near mid position.

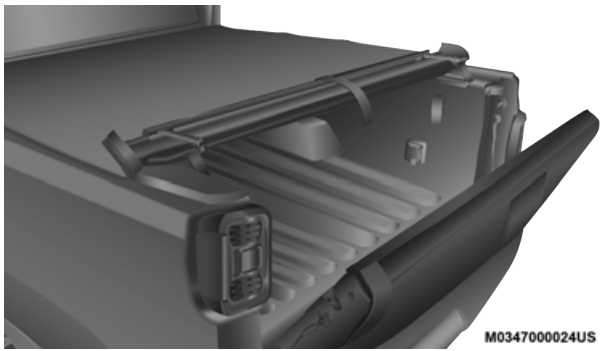

Tailgate In Mid Position

Secure the tailgate in this position by looping the tailgate straps behind the circular retainer on both sides.

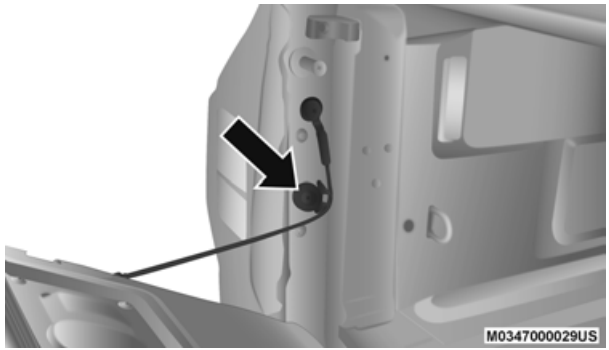

Loop Tailgate Strap Behind Circular Retainer

Ensure the tailgate strap is properly seated behind the circular retainer against the sides of the sheet metal.

Correctly Seated Tailgate Strap

Incorrectly Seated Tailgate Strap

- When hauling cargo using the mid position and the tailgate, you **must** support the load at two forward locations:
  - At the top of the rear wheelhouse (1)
  - Between the wheelhouse and the tailgate (2)

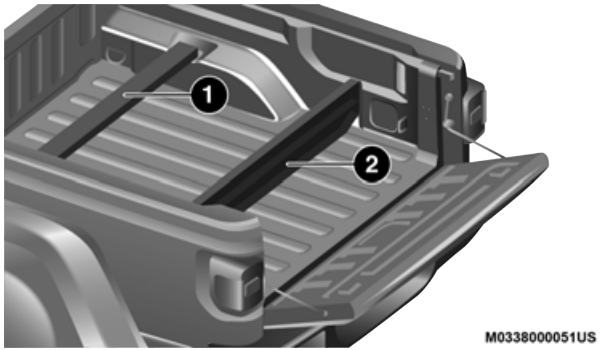

Chamfered Boards In Pickup Box

1 — Support Location 1
2 — Support Location 2

NOTE:
Failure to support the load at these two forward locations could result in damage.

- Three 2x4 boards are needed to provide support at locations (1) and (2). Each board will need to be cut to fit inside the pickup box.
- The support at location (1) should be seated in the dedicated formation on top of the wheelhouses.
- The support at location (2) should use the remaining two 2x4s. Stack the boards and place them into the formation in the side wall of the pickup box. The corners of the bottom board will need to be chamfered to fit.

NOTE:
- All cargo transported in the pickup box must be secured.
- The maximum payload for the mid position is 500 lbs (226 kg).

Closing

To close the tailgate, lift upward until both sides latch into place.

CAUTION!
After closing, pull back on the tailgate firmly to ensure it is securely latched. Damage to the vehicle or cargo could occur.

NOTE:

- If the tonneau cover is installed, make sure the tonneau cover is fully closed before closing the tailgate.
- Due to the presence of the Center High-Mounted Stop Light, removal of the tailgate is not recommended.

GARAGE DOOR OPENER (HOMELINK®) — IF EQUIPPED

HomeLink® replaces up to three hand-held transmitters that operate devices such as garage door openers, motorized gates, lighting or home security systems. The HomeLink® unit is powered by your vehicle's 12V battery.

The HomeLink® buttons, located on the sun visor or the overhead console, designate the three different HomeLink® channels. The HomeLink® indicator is located above the center button.

HomeLink® Buttons

To operate HomeLink®, push and release any of the programmed HomeLink® buttons. These buttons will activate the devices they are programmed to with each press of the corresponding HomeLink® button.

NOTE:
HomeLink® is disabled when the Vehicle Security Alarm is active.

Before You Begin Programming HomeLink®

Be sure that your vehicle is parked outside of the garage before you begin programming.

For more efficient programming and accurate transmission of the radio-frequency signal it is recommended that a new battery be placed in the hand-held transmitter of the device that is being programmed to the HomeLink® system. Make sure your hand-held transmitter is programmed to activate the device you are trying to program your HomeLink® button to.

To erase the channels, place the ignition in the ON/RUN position, and push and hold the two outside HomeLink® buttons (I and III) for up to 20 seconds or until the orange indicator flashes.

NOTE:

- Erasing all channels should only be performed when programming HomeLink® for the first time. Do not erase channels when programming additional buttons.
- If you have any problems, or require assistance, please call toll-free 1-800-355-3515 or, on the Internet at HomeLink.com for information or assistance.

Programming A Rolling Code

Programming garage door openers that were manufactured after 1995 can be identified by the "LEARN" or "TRAIN" button located where the hanging antenna is attached to the garage door opener.

NOTE:
It is NOT the button that is normally used to open and close the door. The name and color of the button may vary by manufacturer.

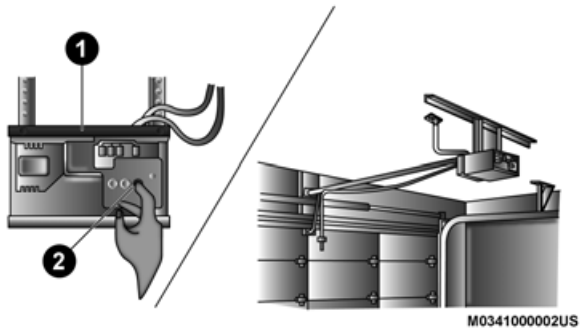

Training The Garage Door Opener

1 — Door Opener
2 — Training Button

1. Place the ignition in the ON/RUN position.
2. Place the hand-held transmitter 1 to 3 inches (3 to 8 cm) away from the HomeLink® button you wish to program while keeping the HomeLink® indicator light in view.
3. Push and hold the HomeLink® button you want to program while you push and hold the hand-held transmitter button.
4. Continue to hold both buttons and observe the indicator light. The HomeLink® indicator will flash slowly and then rapidly after HomeLink® has received the frequency signal from the hand-held transmitter. Release both buttons after the indicator light changes from slow to rapid.
5. At the garage door opener motor (in the garage), locate the "LEARN" or "TRAIN" button. This can usually be found where the hanging antenna wire is attached to the garage door opener/device motor. Firmly push and release the "LEARN" or "TRAIN" button. On some garage door openers/devices there may be a light that blinks when the garage door opener/device is in the LEARN/TRAIN mode.

NOTE:
You have 30 seconds in which to initiate the next step after the LEARN button has been pushed.

6. Return to the vehicle and push the programmed HomeLink® button twice (holding the button for two seconds each time). If the garage door opener/device activates, programming is complete.

   To program the remaining two HomeLink® buttons, repeat each step for each remaining button. DO NOT erase the channels.

NOTE:
If the garage door opener/device does not activate, push the button a third time (for two seconds) to complete the training.

Reprogramming A Single HomeLink® Button (Rolling Code)

To reprogram a channel that has been previously trained, follow these steps:

1. Cycle the ignition to the ON/RUN position.
2. Push and hold the desired HomeLink® button until the indicator light begins to flash after 20 seconds. Do not release the button.
3. Without releasing the button proceed with "Programming A Rolling Code" step 2 and follow all remaining steps."

Programming A Non-Rolling Code

For programming garage door openers manufactured before 1995.

1. Cycle the ignition to the ON/RUN position.
2. Place the hand-held transmitter 1 to 3 inches (3 to 8 cm) away from the HomeLink® button you wish to program while keeping the HomeLink® indicator light in view.
3. Press and hold the HomeLink® button you want to program while you press and hold the hand-held transmitter button.
4. Continue to hold both buttons and observe the indicator light. The HomeLink® indicator will flash slowly and then rapidly after HomeLink® has received the frequency signal from the hand-held transmitter. Release both buttons after the indicator light changes from slow to rapid.
5. Press and hold the programmed HomeLink® button and observe the indicator light.

NOTE:

- If the indicator light stays on constantly, programming is complete and the garage door/device should activate when the HomeLink® button is pressed.
- To program the two remaining HomeLink® buttons, repeat each step for each remaining button. DO NOT erase the channels.

Reprogramming A Single HomeLink® Button (Non-Rolling Code)

To reprogram a channel that has been previously trained, follow these steps:

1. Cycle the ignition to the ON/RUN position.
2. Press and hold the desired HomeLink® button until the indicator light begins to flash after 20 seconds. Do not release the button.
3. Without releasing the button, proceed with "Programming A Non-Rolling Code" step 2 and follow all remaining steps.

Canadian/Gate Operator Programming

For programming transmitters in Canada/United States that require the transmitter signals to "time-out" after several seconds of transmission.

Canadian radio frequency laws require transmitter signals to time-out (or quit) after several seconds of transmission – which may not be long enough for HomeLink® to pick up the signal during programming. Similar to this Canadian law, some U.S. gate operators are designed to time-out in the same manner.

It may be helpful to unplug the device during the cycling process to prevent possible overheating of the garage door or gate motor.

1. Cycle the ignition to the ON/RUN position.
2. Place the hand-held transmitter 1 to 3 inches (3 to 8 cm) away from the HomeLink® button you wish to program while keeping the HomeLink® indicator light in view.
3. Continue to press and hold the HomeLink® button, while you press and release ("cycle") your hand-held transmitter every two seconds until HomeLink® has successfully accepted the frequency signal. The indicator light will flash slowly and then rapidly when fully trained.
4. Watch for the HomeLink® indicator to change flash rates. When it changes, it is programmed. It may take up to 30 seconds or longer in rare cases. The garage door may open and close while you are programming.
5. Press and hold the programmed HomeLink® button and observe the indicator light.

NOTE:

- If the indicator light stays on constantly, programming is complete and the garage door/device should activate when the HomeLink® button is pressed.
- To program the two remaining HomeLink® buttons, repeat each step for each remaining button. DO NOT erase the channels.

If you unplugged the garage door opener/device for programming, plug it back in at this time.

Reprogramming A Single HomeLink® Button (Canadian/ Gate Operator)

To reprogram a channel that has been previously trained, follow these steps:

1. Cycle the ignition to the ON/RUN position.
2. Press and hold the desired HomeLink® button until the indicator light begins to flash after 20 seconds. Do not release the button.
3. Without releasing the button, proceed with "Canadian/ Gate Operator Programming" step 2 and follow all remaining steps.

Using HomeLink®

To operate, push and release the programmed HomeLink® button. Activation will now occur for the programmed device (i.e. garage door opener, gate operator, security system, entry door lock, home/office lighting, etc.). The hand-held transmitter of the device may also be used at any time.

Security

It is advised to erase all channels before you sell or turn in your vehicle.

To do this, push and hold the two outside buttons for 20 seconds until the orange indicator flashes. Note that all channels will be erased. Individual channels cannot be erased.

The HomeLink® Universal Transceiver is disabled when the Vehicle Security Alarm is active.

NOTE:
The universal garage door opener only operates when the engine is running for security reasons associated with removable tops and doors.

Troubleshooting Tips

If you are having trouble programming HomeLink®, here are some of the most common solutions:

- Replace the battery in the garage door opener hand-held transmitter.
- Push the LEARN button on the garage door opener to complete the training for a Rolling Code.
- Did you unplug the device for programming and remember to plug it back in?

If you have any problems, or require assistance, please call toll-free 1-800-355-3515 or, on the Internet at HomeLink.com for information or assistance.

WARNING!

- **Vehicle exhaust contains carbon monoxide, a dangerous gas. Do not run your vehicle in the garage while programming the transceiver. Exhaust gas can cause serious injury or death.**

(Continued)

WARNING! *(Continued)*

- **Your motorized door or gate will open and close while you are programming the universal transceiver. Do not program the transceiver if people, pets or other objects are in the path of the door or gate. Only use this transceiver with a garage door opener that has a "stop and reverse" feature as required by Federal safety standards. This includes most garage door opener models manufactured after 1982. Do not use a garage door opener without these safety features. Call toll-free 1-800-355-3515 or, on the Internet at HomeLink.com for safety information or assistance.**

General Information

The following regulatory statement applies to all Radio Frequency (RF) devices equipped in this vehicle:

This device complies with Part 15 of the FCC Rules and with Innovation, Science and Economic Development Canada license-exempt RSS standard(s). Operation is subject to the following two conditions:

1. This device may not cause harmful interference, and
2. This device must accept any interference received, including interference that may cause undesired operation.

Le présent appareil est conforme aux CNR d`Innovation, Science and Economic Development applicables aux appareils radio exempts de licence. L'exploitation est autorisée aux deux conditions suivantes:

1. l'appareil ne doit pas produire de brouillage, et
2. l'utilisateur de l'appareil doit accepter tout brouillage radioélectrique subi, même si le brouillage est susceptible d'en compromettre le fonctionnement.

La operación de este equipo está sujeta a las siguientes dos condiciones:

1. es posible que este equipo o dispositivo no cause interferencia perjudicial y
2. este equipo o dispositivo debe aceptar cualquier interferencia, incluyendo la que pueda causar su operación no deseada.

NOTE:
Changes or modifications not expressly approved by the party responsible for compliance could void the user's authority to operate the equipment.

INTERNAL EQUIPMENT

Storage

Glove Compartment

The glove compartment is located on the passenger side of the instrument panel.

To open the glove compartment, pull the release handle.

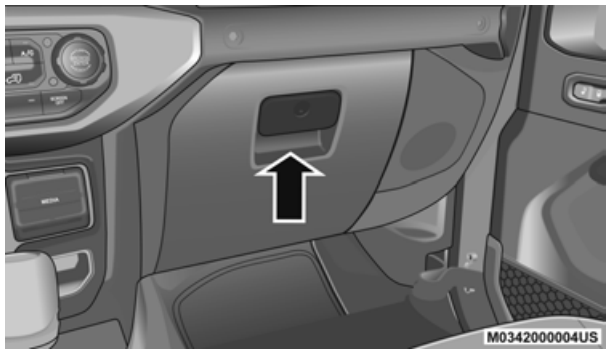

Glove Compartment Release Handle

WARNING!
Do not operate this vehicle with the glove compartment in the open position. Driving with the glove compartment open may result in injury in a collision.

Console Storage Compartment

The center console has both an upper and lower storage compartment.

To open the upper storage compartment, lift the top latch.

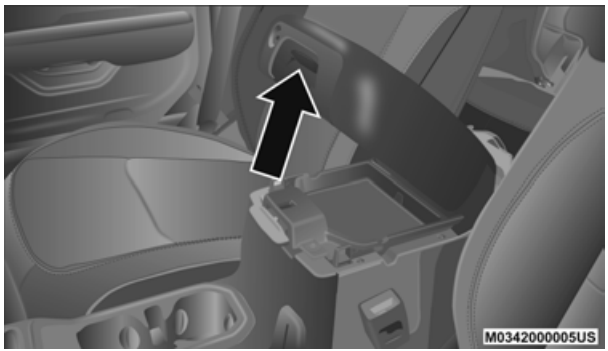

Upper Console Storage Latch

To access the lower storage compartment, lift the bottom latch.

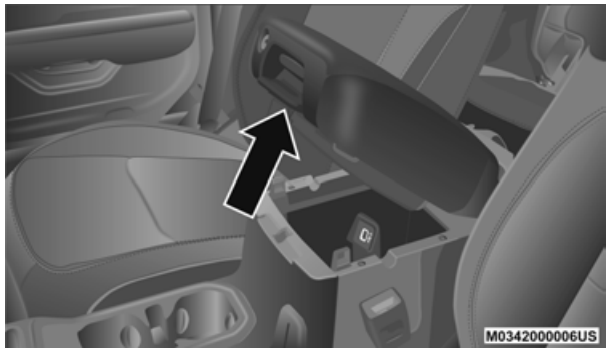

Lower Console Storage Latch

Under Seat Storage — If Equipped

Your vehicle may be equipped with two options for under seat storage:

- Non-Locking Storage Wall
- Under Seat Locking Storage Bin

Non-Locking Storage Wall

M0342000020US

Non-Locking Storage Wall

The Non-Locking Storage Wall can be used for storage by folding the bottom of the rear seat up and placing items behind the wall.

There is also an option to remove the wall by removing the four bolts that connect the storage wall to the floor.

Locking Storage Bin

M0342000022US

Under Seat Locking Storage Bin Location

If equipped, the Locking Storage Bin is located below the rear seats. It can be accessed by folding the rear seat bottom upward into the Stadium Position.

The Locking Storage Bin has two keyed locks on the front of the bin and uses the same key as the Glove Compartment and the Center Console for your vehicle.

Inside the bin are three removable dividers to set up storage that works best for you.

The Locking Storage Bin can be removed by unfastening the four bolts that attach the bin to the vehicle floor. The bottom of the storage bin has rubber mats that need to be removed to access the four bolts.

NOTE:
All tools for removal of storage bins come equipped with your vehicle in the Jeep Tool Kit.

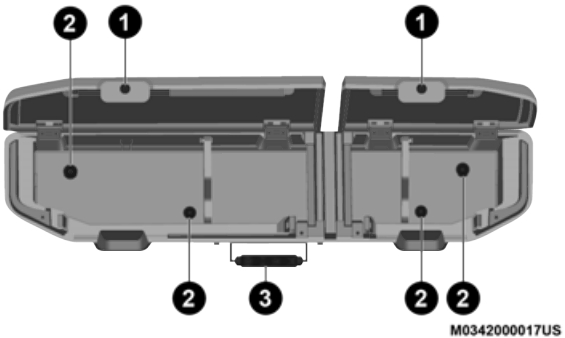

Under Seat Storage (Open View)

1 — Key Locks
2 — Removable Bolts
3 — Handle

Your Locking Storage bin also has a front handle that makes it easier to carry and pull out from the floor of the vehicle when the four bolts that attach the bin to the floor are removed.

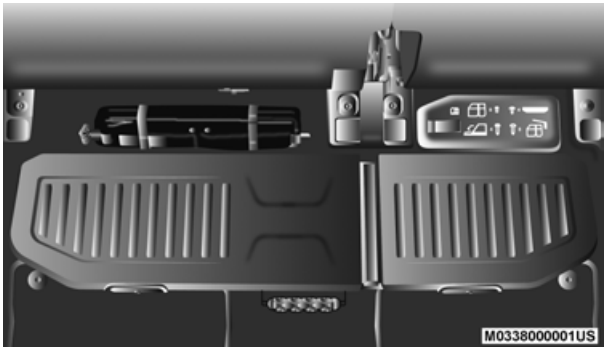

Locking Storage Bin (Closed View)

Rear Behind Seat Storage — If Equipped

The rear wall storage bin is located behind the right rear seat.

Rear Wall Storage Bin

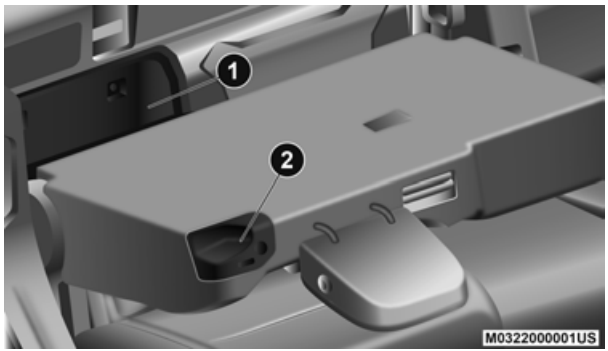

Rear Wall Storage Bin

1 — Rear Wall Storage Bin
2 — Pull Strap Location

To access the storage bin, pull upward on the pull strap located on the upper outboard side of the right rear seat, and fold the seatback forward.

NOTE:
The rear seatback can be locked with the mechanical key on your key fob to secure items in the rear wall storage bin. The seat lock is located on the right corner of the seat back. Both seatbacks should be locked to limit access to items behind seat.

Rear Wall Netting

The rear wall netting can be accessed the same way as the rear wall storage bin.

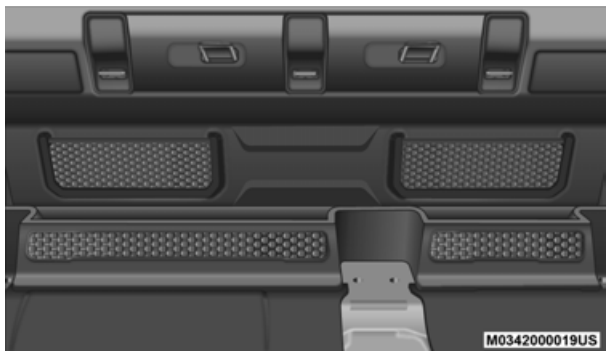

Rear Wall Netting

Fastener Bin

Your vehicle is equipped with a Fastener Bin used to store the fasteners for the doors, windshield, and hard top (if equipped) while not in use. The Fastener Bin is located behind the rear seat storage bin. The Fastener Bin contains foam inserts for each of the fasteners; they are removable.

To remove the Fastener Bin:

1. Remove the lid and foam inserts from the Fastener Bin.
2. Remove the three nuts from the bottom of the Fastener Bin.

NOTE:
The soft top fasteners do not go in the Fastener Bin.

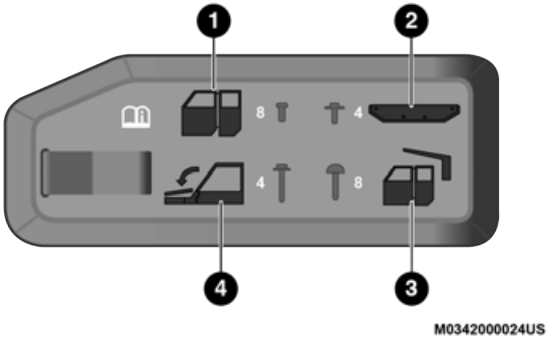

Fastener Bin

1 — Door Removal
2 — Under Seat Storage Bin Removal
3 — Hard Top Removal
4 — Folding Windshield

Cupholders

The front cupholders are located in the center console.

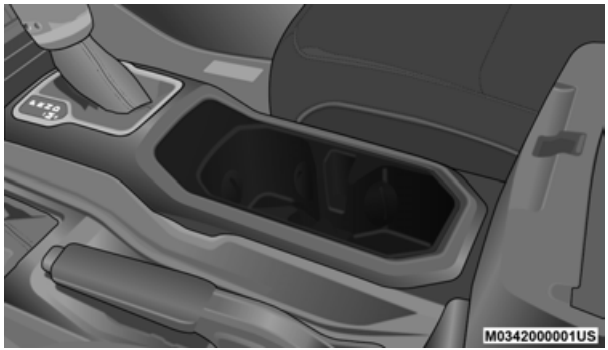

Front Cupholders

The rear cupholders are located on the back of the center console, near the floor.

Rear Cupholders

NOTE:
Cupholders located in the front center console, as well as the back of the center console are **not** removable.

There are also cupholders located in the rear seat armrest (if equipped). These cupholders can be removed for cleaning.

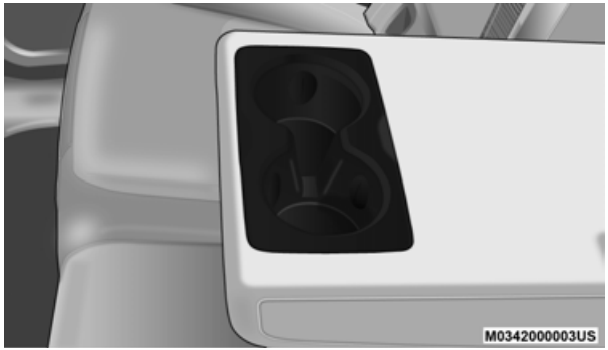

Rear Seat Armrest Cupholders

Front Power Outlet

Electrical Power Outlet

There is a 12V (13 A) auxiliary power outlet that can provide power for accessories designed for use with the standard power outlet adapters.

The front power outlet is located in the center of the instrument panel below the climate controls, and is powered from the ignition switch. Power is available when the ignition switch is in the ON or ACC position.

CAUTION!

- **Do not exceed the maximum power of 160 W (13 A) at 12 Volts. If the 160 W (13 A) power rating is exceeded the fuse protecting the system will need to be replaced.**
- **Power outlets are designed for accessory plugs only. Do not insert any other object in the power outlets as this will damage the outlet and blow the fuse. Improper use of the power outlet can cause damage not covered by your New Vehicle Limited Warranty.**

WARNING!

To avoid serious injury or death:

- **Do not insert any objects into the receptacles.**
- **Do not touch with wet hands.**
- **Close the lid when not in use.**
- **If this outlet is mishandled, it may cause an electric shock and failure.**

CAUTION!

- **Many accessories that can be plugged in draw power from the vehicle's battery, even when not in use (i.e., cellular phones, etc.). Eventually, if plugged in long enough, the vehicle's battery will discharge sufficiently to degrade battery life and/or prevent the engine from starting.**
- **Accessories that draw higher power (i.e., coolers, vacuum cleaners, lights, etc.), will degrade the battery even more quickly. Only use these intermittently and with greater caution.**

(Continued)

CAUTION! *(Continued)*

- **After the use of high power draw accessories, or long periods of the vehicle not being started (with accessories still plugged in), the vehicle must be driven a sufficient length of time to allow the alternator to recharge the vehicle's battery.**
- **Power outlets are designed for accessory plugs only. Do not hang any type of accessory or accessory bracket from the plug. Improper use of the power outlet can cause damage.**

Power Inverters — If Equipped

There is a 115 V (400 W) maximum inverter outlet located on the back of the center console to convert Direct Current (DC) current to Alternating Current (AC).

This outlet can power cellular phones, electronics and other low power devices requiring power up to 400 W. Certain high-end video game consoles exceed this power limit, as will most power tools.

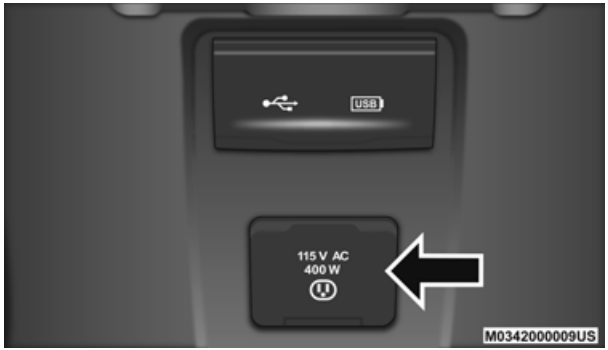

Power Inverter

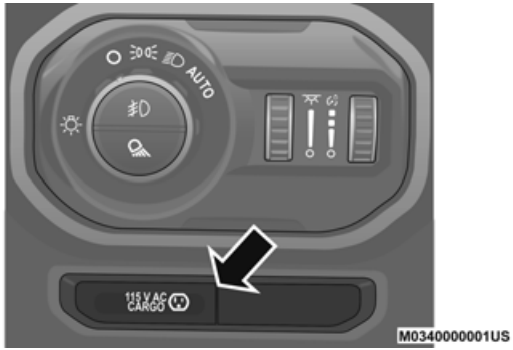

Power Inverter Switch (If Equipped)

There may also be a second 115 V (400 W) maximum exterior power inverter located on the rear right side of the truck bed near the tailgate. This inverter can be turned on by the Instrument Panel Power Inverter switch located to the left of the steering wheel. This inverter can power cellular phones, electronics and other low power devices requiring power up to 400 W. Certain high-end video game consoles exceed this limit, as will most power tools.

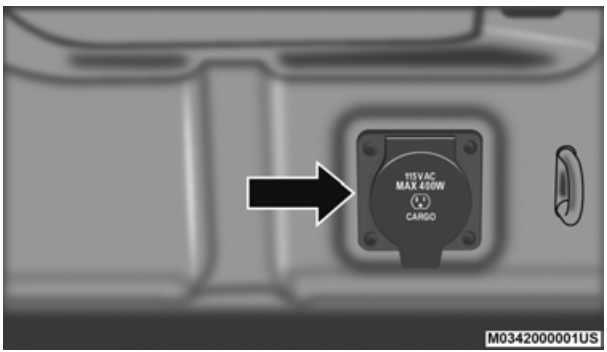

Exterior Truck Bed Power Inverter (If Equipped)

NOTE:
400 W is the maximum for the inverter, not each outlet. If two outlets are in use, 400 W is shared amongst the devices plugged in.

The power inverter is designed with built-in overload protection. If the power rating of 400 W is exceeded, the power inverter automatically shuts down. Once the electrical device has been removed from the outlet, the inverter should automatically reset.

NOTE:

- The Power Inverter will only turn on if the ignition is in the ACC or ON/RUN position.
- Due to built-in overload protection, the power inverter will turn off if the power rating is exceeded.

WARNING!
To avoid serious injury or death: • **Do not insert any objects into the receptacles.** • **Do not touch with wet hands.** • **Close the lid when not in use.** • **If this outlet is mishandled, it may cause an electric shock and failure.**

Auxiliary Switches — If Equipped

Four auxiliary switches are located in the lower switch bank of the instrument panel and can be used to power various electrical devices.

The functionality of the auxiliary switches can be changed via the Uconnect settings. All switches can be configured for setting the switch type operation to latching or momentary, power source of either battery or ignition, and ability to hold last state across key cycles.

Auxiliary Switches

NOTE:
Holding last state conditions are met when switch type is set to latching and power source is set to ignition.

For more information, refer to "Uconnect Settings" in "Multimedia".

The auxiliary switches manage the relays that power four blunt cut wires. These wires are located under the instrument panel in the passenger compartment and under the hood to the right, near the battery.

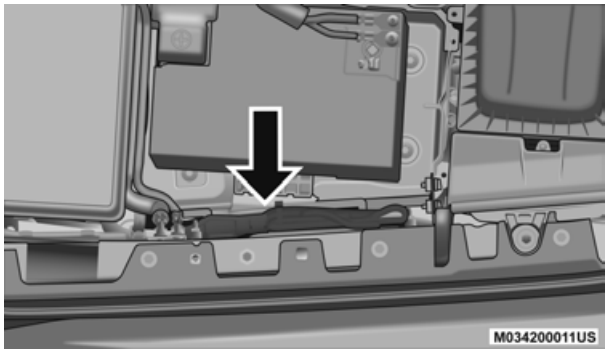

Auxiliary Switch Connections — Under Hood

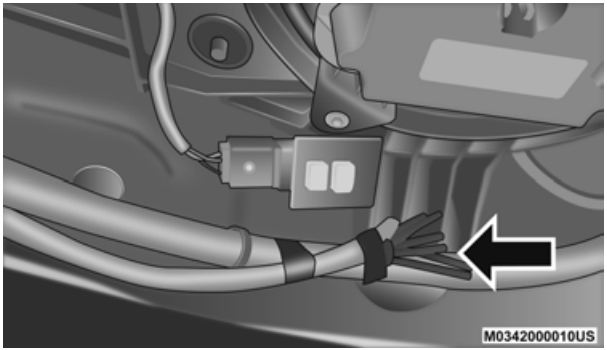

Auxiliary Switch Connections – Under Instrument Panel

In addition to the four auxiliary switch wires, a fused battery wire and ignition wire are also located in the interior, on the passenger side under the instrument panel.

A kit of splices and heat shrink tubing are provided with the auxiliary switches to aid in the connection/installation of your electrical devices.

Wire Color Chart

Circuit Function	Fuse	Wire Color	Locations
Aux Switch 1	F93 – 40 Amp	Beige/Pink	Interior (passenger side under instrument panel) & Underhood (right side near battery)
Aux Switch 2	F92 – 40 Amp	Green/Pink	Interior (passenger side under instrument panel) & Underhood (right side near battery)
Aux Switch 3	F103 – 15 Amp	Orange/Pink	Interior (passenger side under instrument panel) & Underhood (right side near battery)
Aux Switch 4	F108 – 15 Amp	Dark Blue/Pink	Interior (passenger side under instrument panel) & Underhood (right side near battery)
Battery	F72 – 10 Amp	Red/White	Interior (passenger side under instrument panel)
Ignition	F50 – 10 Amp	Pink/Orange	Interior (passenger side under instrument panel)

BED RAIL TIE DOWN SYSTEM — IF EQUIPPED

CAUTION!
The maximum load per cleat should not exceed 250 lbs (113 kg) and the angle of the load on each cleat should not exceed 45 degrees above horizontal, or damage to the cleat or cleat rail may occur.

The Bed Rail Tie Down System allows you to properly secure cargo in the truck bed.

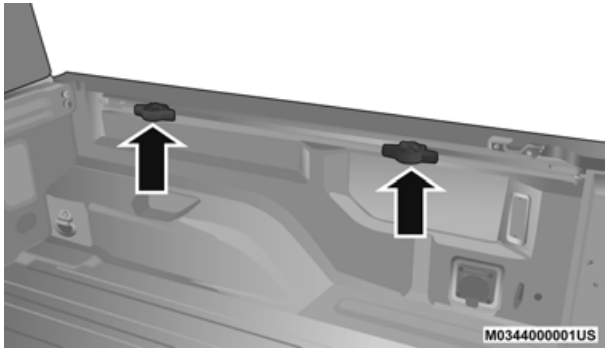

Bed Rail Tie Down Locations

There are two adjustable utility rail cleats on each side of the bed that can be used to assist in securing cargo.

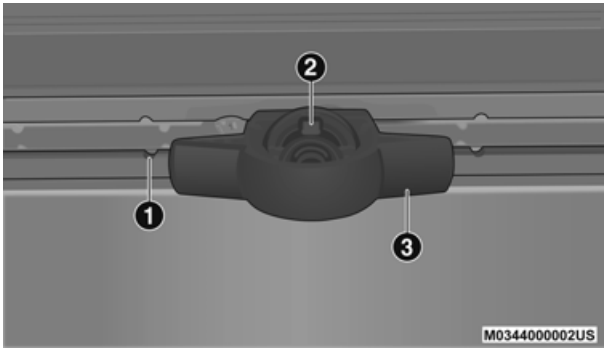

Adjustable Cleat Assembly

1 — Utility Rail Detent
2 — Cleat Retainer Nut
3 — Utility Rail Cleat

Each utility rail cleat must be tightened down in one of the detents along either utility rail in order to keep cargo properly secured.

To move the utility rail cleat to any position on the utility rail, turn the cleat retainer nut counterclockwise, approximately three turns. Then, pull out on the utility rail cleat and slide it to the detent nearest the desired location. Make sure the utility rail cleat is seated in the detent, and tighten the nut.

To remove the utility rail cleats from the utility rail, slide the cleat to the rectangular cutout located at the end of the rail.

TONNEAU COVER — IF EQUIPPED

The Tonneau Cover can be installed on the truck bed to keep cargo out of view, and protect from inclement weather.

The Tonneau Cover consists of the following features:

- Easy roll up cover
- Tonneau fore/aft locator
- Crossbar inside bed locator
- Rear latches
- Stowage straps

NOTE:
The Tonneau Cover can be rolled up and secured at the front of the truck bed without removing it completely.

Tonneau Cover Installation

To install the Tonneau Cover, proceed as follows:

1. Position the rolled up Tonneau Cover on the truck bed and align it to the two fastener locations at the front of the bed.

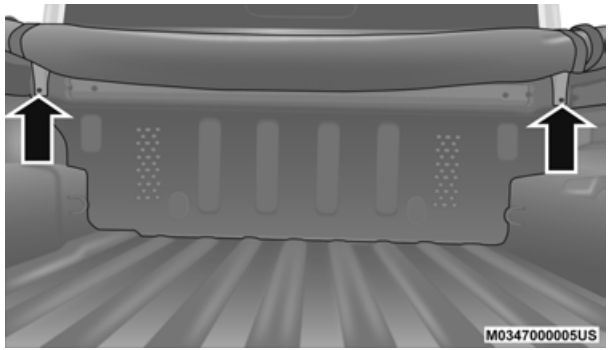

Fastener Locations

2. Using a #T50 Torx head driver, secure the fasteners to the bed.

3. Lower the tailgate to the fully open position before unrolling the Tonneau Cover.

4. Release the stowage straps used to secure the Tonneau Cover in the rolled up position.

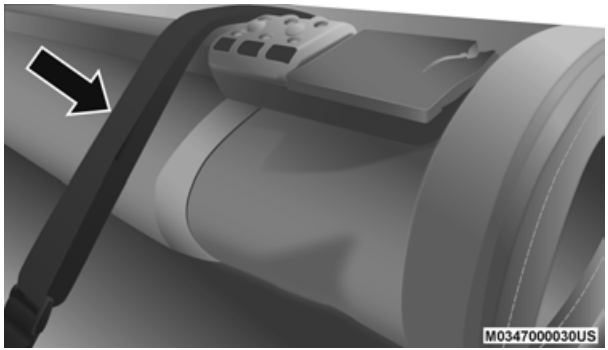

Release Stowage Strap

5. Roll the Tonneau Cover rearward toward the back of the truck bed.

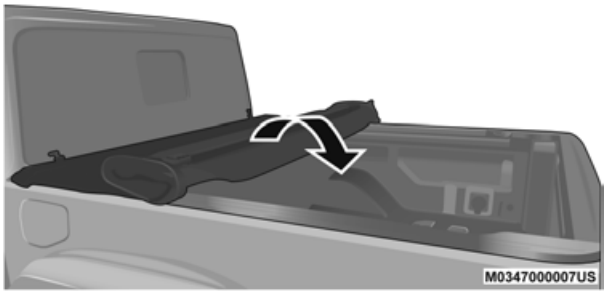

Roll Tonneau Cover Rearward

6. Position both Tonneau Cover latches over the locking mechanisms (one on each side of the truck bed), making sure the plastic retainer is correctly seated in the forward part of the latch.

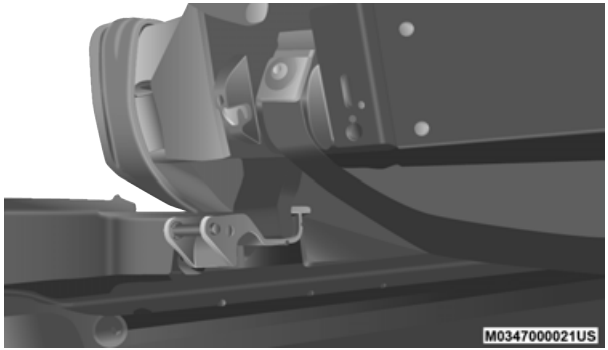

Correctly Seated Retainer

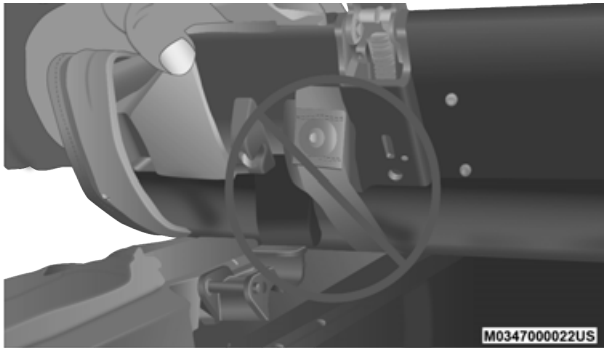

Incorrectly Seated Retainer

7. Once the rear Tonneau Cover bar is positioned over the locking mechanism, grasp the back of the Tonneau Cover and push downward on the center to engage the locking mechanisms.

NOTE:
Make sure an audible "click" from both sides of the Tonneau Cover are heard to confirm that the latch is completely engaged.

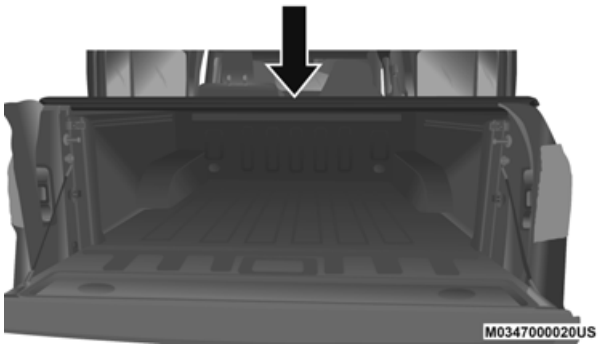

Push Downward To Lock

NOTE:
If desired, the Tonneau Cover can be left in this position and the tailgate can be raised to the mid-position. Refer to "Tailgate" in "Getting To Know Your Vehicle" for further information.

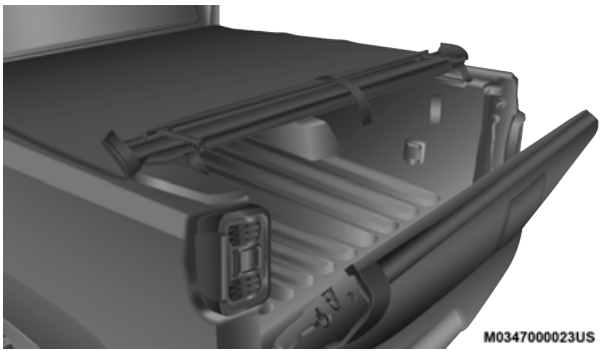

Tonneau Cover With Tailgate In Mid-Position

8. The tailgate can now be raised and secured in place.

NOTE:
The Tonneau Cover must be closed completely prior to fully closing the tailgate.

CAUTION!
Do not sit on the Tonneau Cover; damage to the cover and/or cargo will occur.

Tonneau Cover Removal

To remove the Tonneau Cover, proceed as follows:

1. Open the tailgate to access the red Tonneau Cover release straps.

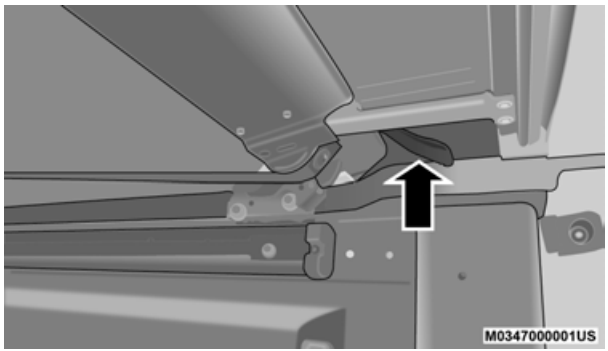

Release Strap Location

2. Pull one of the red release straps to disengage the rear locking mechanism.

NOTE:
Pulling either strap will release the latches to roll the Tonneau Cover up; there is no need to pull both at the same time.

3. Roll the Tonneau Cover forward, starting with the rear bar and continue to roll toward the front of the truck bed.

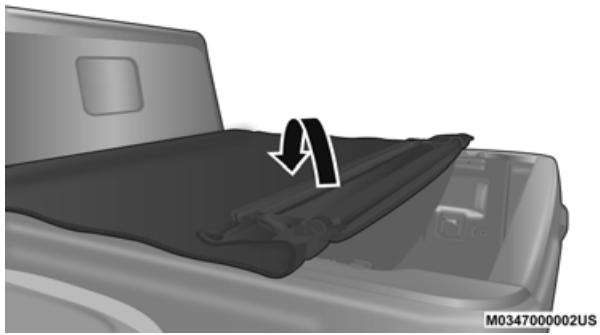

Roll Tonneau Cover Forward

4. Using the stowage straps, secure the Tonneau Cover in the rolled up position.

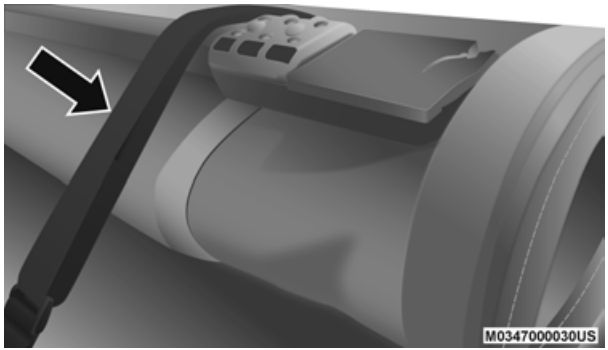

Secure Tonneau Cover

5. Using a #T50 Torx head driver, remove the two fasteners securing the Tonneau Cover to the front of the truck bed.

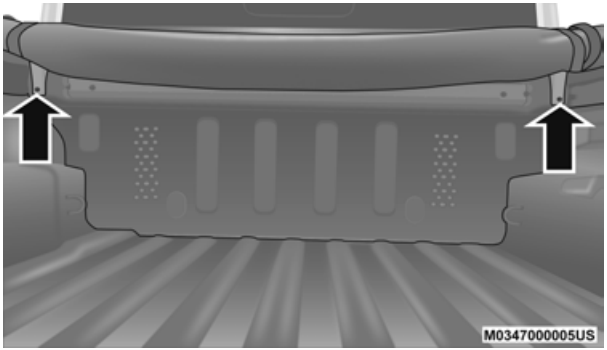

Fastener Locations

6. Utilizing two people, lift the Tonneau Cover up and away from the truck bed.

NOTE:
Be sure the Tonneau Cover has been completely rolled up, and straps are secure, before removing.

7. Store in a safe location.

ROOF LUGGAGE RACK — IF EQUIPPED

NOTE:
Roof rack applications are for Hard Top models **ONLY.**

The Roof Luggage Rack is designed to allow for carrying an additional cargo load on a Hard Top Vehicle. The load carried on the roof, when equipped with a luggage rack, must not exceed 100 lbs (45 kg), this includes the weight of the crossbars, and it should be uniformly distributed over the cargo area.

Crossbars should always be used whenever cargo is placed on the roof rack. Check the straps frequently to be sure that the load remains securely attached.

NOTE:
Crossbars can be purchased at an authorized dealer through Mopar parts.

External racks do not increase the total load carrying capacity of the vehicle. Be sure that the total occupant and luggage load inside the vehicle, plus the load on the luggage rack, do not exceed the maximum vehicle load capacity.

WARNING!

Cargo must be securely tied down before driving your vehicle. Improperly secured loads can fly off the vehicle, particularly at high speeds, resulting in personal injury or property damage. Follow the roof rack cautions when carrying cargo on your roof rack.

CAUTION!

- **To avoid damage to the roof rack and vehicle, do not exceed the maximum roof rack load capacity. Always distribute heavy loads as evenly as possible and secure the load appropriately.**
- **Long loads, which extend over the windshield, should be secured to both the front and rear of the vehicle.**
- **Place a blanket or other protection between the surface of the roof and the load.**
- **Travel at reduced speeds and turn corners carefully when carrying large or heavy loads on the roof rack. Wind forces, due to natural causes or nearby truck traffic, can add sudden upward loads. It is recommended to not carry large flat loads, such as wood panels or surfboards, which may result in damage to the cargo or your vehicle.**

(Continued)

CAUTION! *(Continued)*

- **Load should always be secured to cross bars first, with tie down loops used as additional securing points if needed. Tie loops are intended as supplementary tie down points only. Do not use ratcheting mechanisms with the tie loops. Check the straps frequently to be sure that the load remains securely attached.**

GETTING TO KNOW YOUR INSTRUMENT PANEL

INSTRUMENT CLUSTER

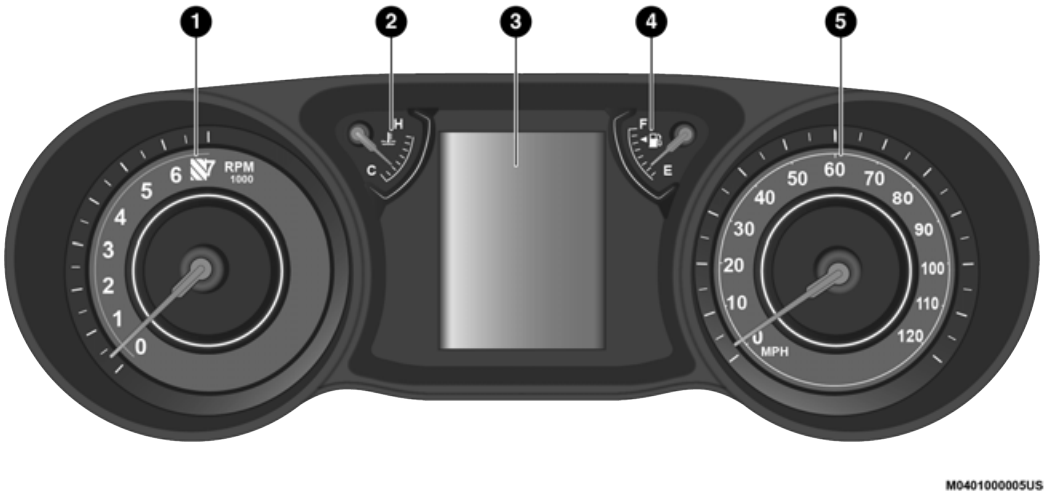

Base Instrument Cluster

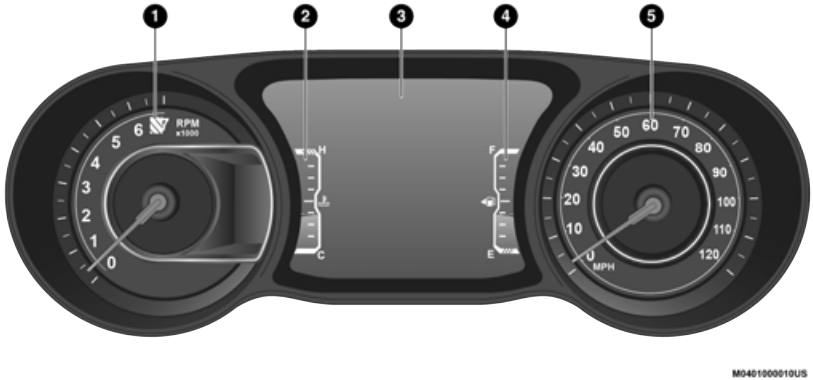

Premium Instrument Cluster

Instrument Cluster Descriptions

1. Tachometer

- Indicates the engine speed in revolutions per minute (RPM x 1000).

CAUTION!
Do not operate the engine with the tachometer pointer in the red area. Engine damage will occur.

2. Temperature Gauge

- The temperature gauge shows engine coolant temperature. Any reading within the normal range indicates that the engine cooling system is operating satisfactorily.
- The gauge pointer will likely indicate a higher temperature when driving in hot weather, up mountain grades, or when towing a trailer. It should not be allowed to exceed the upper limits of the normal operating range.

WARNING!

A hot engine cooling system is dangerous. You or others could be badly burned by steam or boiling coolant. You may want to call an authorized dealer for service if your vehicle overheats.

CAUTION!

Driving with a hot engine cooling system could damage your vehicle. If the temperature gauge reads "H" pull over and stop the vehicle. Idle the vehicle with the air conditioner turned off until the pointer drops back into the normal range. If the pointer remains on the "H", turn the engine off immediately and call an authorized dealer for service.

3. **Instrument Cluster Display**

- The instrument cluster display features a driver-interactive display. Refer to "Instrument Cluster Display" in "Getting To Know Your Instrument Panel" for further information.

4. **Fuel Gauge**

- The pointer shows the level of fuel in the fuel tank when the ignition switch is in the ON/RUN position.
- The fuel pump symbol points to the side of the vehicle where the fuel filler door is located.

5. **Speedometer**

- Indicates vehicle speed.

INSTRUMENT CLUSTER DISPLAY

Your vehicle may be equipped with an instrument cluster display, which offers useful information to the driver. With the ignition in the OFF mode, opening/closing of a door will activate the display for viewing, and display the total miles (kilometers) in the odometer. Your instrument cluster display is designed to display important information about your vehicle's systems and features. The Driver Interactive Display, located in the instrument panel, indicates how systems are operating and gives you warnings when a system, or systems, needs your attention. The steering wheel mounted controls allow you to scroll through and enter the main menus and submenus. You can access the specific information you want to make selections and adjustments.

Instrument Cluster Display Location And Controls

The Instrument Cluster Display is located in the center of the instrument cluster.

3.5 Inch Instrument Cluster Display Location

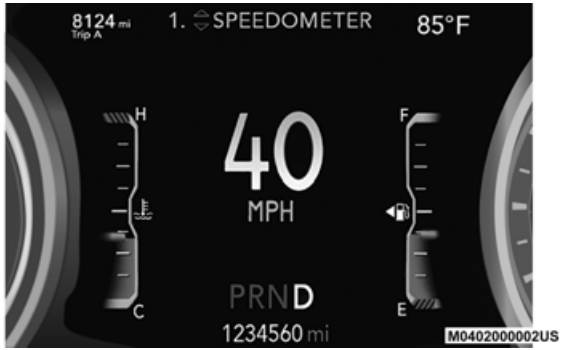

7.0 Inch Instrument Cluster Display Location

- The top line where Reconfigurable Telltales, Compass Direction, Outside Temperature, Time, Range, MPG or Trip are displayed. This also displays the Speedometer which is an option for the upper center reconfigurable but is not the default.
- The main display area where the menus and pop up messages are displayed.
- The lower line where reconfigurable telltales, menu name and menu page are displayed.

The system allows the driver to select information by pushing the following buttons mounted on the steering wheel:

Instrument Cluster Display Control Buttons

1 — OK Button
2 — Up Arrow Button
3 — Right Arrow Button
4 — Down Arrow Button
5 — Left Arrow Button

- **Up Arrow Button:**

△ Push and release the up arrow button to scroll upward through the Main Menu items.

- **Down Arrow Button:**

▽ Push and release the down arrow button to scroll downward through the Main Menu items.

- **Right Arrow Button:**

▷ Push and release the right arrow button to access the information screens or submenu screens of a Main Menu item.

- **Left Arrow Button:**

◁ Push and release the left arrow button to access the information screens or submenu screens of a Main Menu item.

- **OK Button:**

Push the OK button to access/select the information screens or submenu screens of a Main Menu item. Push and hold the OK button for two seconds to reset displayed/selected features that can be reset.

The Main Menu items consists of the following:

- Speedometer
- Vehicle Info
- Off Road — If Equipped
- Driver Assist — If Equipped
- Fuel Economy
- Trip Info
- Stop/Start — If Equipped
- Audio
- Messages
- Screen Setup

Oil Life Reset — If Equipped

Your vehicle may be equipped with an engine oil change indicator system. The “Oil Change Required” message will display in the instrument cluster display for five seconds after a single chime has sounded to indicate the next scheduled oil change interval. The engine oil change indicator system is duty cycle based, which means the engine oil change interval may fluctuate, dependent upon your personal driving style.

Unless reset, this message will continue to display each time you place the ignition in the ON/RUN position. To turn off the message temporarily, push and release the **OK** button. To reset the oil change indicator system (after performing the scheduled maintenance), refer to the following procedure.

Oil Life Reset

1. Without pushing the brake pedal, place the ignition in the ON/RUN mode (do not start the engine).
2. Navigate to "Oil Life" submenu in "Vehicle Info" in the instrument cluster display.
3. Push and hold the **OK** button until the gauge resets to 100%.

Secondary Method For Oil Change Reset Procedure

1. Without pushing the brake pedal, place the ignition in the ON/RUN position (do not start the engine).
2. Fully press the accelerator pedal, slowly, three times within ten seconds.
3. Without pushing the brake pedal, place the ignition in the OFF/LOCK position.

NOTE:
If the indicator message illuminates when you start the vehicle, the oil change indicator system did not reset. If necessary, repeat this procedure.

Off Road+ Display — If Equipped

When the Off Road+ button is pushed in the switch bank, the Instrument Cluster Display will begin to show messages related to the feature. Depending on the Four Wheel Drive mode in use, the messages will differ, and after five seconds, all messages will clear from the display. The messages are as follows:

- 2H: Off Road+ Unavailable, Shift to 4WD
- 4H: 4WD High Off Road+ Active
- 4L: 4WD Low Off Road+ Active

Adaptive Cruise Control (ACC) and Speed Control are not available when using Off Road+. If either option is selected, a dedicated message will display indicating that the features are not usable concurrently. Messages are as follows:

- 4H: Speed Control — Cruise Control Unavailable in Off Road+
- 4H: Adaptive Cruise Control — Adaptive Cruise Control (ACC) Unavailable in Off Road+
- 4L: Speed Control — Cruise Control Unavailable in 4WD Low
- 4L: Adaptive Cruise Control — Adaptive Cruise Control (ACC) Unavailable in 4WD Low

NOTE:
The behavior of Electronic Stability Control while in Off Road+ varies depending on the 4WD status. If the vehicle is in 4H, Traction Control is automatically turned off. Also, holding the ESC Off button for five seconds will turn off ESC. In 4L, Electronic Stability Control automatically shuts off regardless of the Off Road Status.

Instrument Cluster Display Selectable Items

The instrument cluster display can be used to view the following main menu items:

NOTE:
Depending on the vehicles options, feature settings may vary.

• Speedometer	• Stop/Start
• Vehicle Info	• Audio
• Off-Road - If Equipped	• Messages
• Fuel Economy	• Screen Setup
• Trip Info	

Instrument Cluster Display Menu Items

NOTE:
The instrument cluster display menu items display in the center of the instrument cluster. Menu items may vary depending on your vehicle features.

Refer to "Instrument Cluster Display" in this section for further information.

Speedometer

Push and release the **up** or **down** arrow button until the speedometer menu icon is displayed in the instrument cluster display. Push and release the **OK** button to toggle between mph and km/h.

Vehicle Info

Push and release the **up** or **down** arrow button until the Vehicle Info menu icon is displayed in the instrument cluster display. Push and release the **left** or **right** arrow button to scroll through the information submenus and push and release the **OK** button to select or reset the resettable submenus.

• Tire Pressure	• Coolant Temperature
• Transmission Temperature — Automatic Transmission Only	• Oil Temperature
• Oil Pressure	• Oil Life
• Battery Voltage	

Off Road

Push and release the **up** or **down** arrow button until the Off Road menu icon is displayed in the instrument cluster display. Push and release the left or right arrow button to scroll through the information submenus.

Drivetrain

- Front Wheel Angle: displays the graphical and numerical value of calculated average front wheel angle from the steering wheel orientation.
- Transfer Case Lock Status: displays "Lock" graphic only during 4WD High, 4WD High Part Time, 4WD Low status.
- Axle Lock And Sway Bar Status (if equipped): displays front and rear or rear only axle locker graphic, and sway bar connection graphic with text message (connected or disconnected).

Pitch And Roll

Displays the pitch and roll of the vehicle in the graphic with the angle number on the screen.

NOTE:
When vehicle speed becomes too high to display the pitch and roll, "- -" will display in place of the numbers, and the graphic will be greyed out. A message indicating the necessary speed for the feature to become available will also display.

Driver Assist — If Equipped

The Driver Assist menu displays the status of the ACC and LaneSense systems.

Push and release the **up** or **down** arrow button until the Driver Assist menu is displayed in the instrument cluster display.

Adaptive Cruise Control (ACC) Feature — If Equipped

The instrument cluster display displays the current Adaptive Cruise Control (ACC) system settings. The information displayed depends on ACC system status.

Push the Adaptive Cruise Control (ACC) ON/OFF button (located on the steering wheel) until one of the following displays in the instrument cluster display:

Adaptive Cruise Control Off

When ACC is deactivated, the display will read "Adaptive Cruise Control Off."

Adaptive Cruise Control Ready

When ACC is activated but the vehicle speed setting has not been selected, the display will read "Adaptive Cruise Control Ready."

Push the SET + or the SET - button (located on the steering wheel), and the following will display in the instrument cluster display.

ACC SET

When ACC is set, the set speed will display in the instrument cluster.

The ACC screen may display once again if any ACC activity occurs, which may include any of the following:

- System Cancel
- Driver Override
- System Off
- ACC Proximity Warning
- ACC Unavailable Warning

For further information, refer to "Adaptive Cruise Control (ACC) — If Equipped" in "Starting And Operating."

Fuel Economy

Push and release the **up** or **down** arrow button until the Fuel Economy icon is highlighted in the instrument cluster display. Push and hold the OK button to reset average fuel economy feature.

Toggle **left** or **right** to select a display with or without Current Fuel Economy Information.

- Range – The display shows the estimated distance (mi or km) that can be traveled with the fuel remaining in the tank. When the Range value is less than 10 mi (16 km), the Range display will change to a "LOW" message. Adding a significant amount of fuel to the vehicle will turn off the "LOW" message and a new Range value will display. Range cannot be reset through the OK button.

NOTE:
Significant changes in driving style or vehicle loading will greatly affect the actual drivable distance of the vehicle, regardless of the Range displayed value.

- Average – The display shows the average fuel economy (MPG, L/100km, or km/L) since the last reset.
- Current – The display shows the current fuel economy (MPG, L/100km, or km/L) while driving.

Trip

Push and release the **up** or **down** arrow button until the Trip icon/title is highlighted in the instrument cluster display, then push and release the **left** or **right** arrow button to select Trip A or Trip B.

The Trip A and Trip B information will display the following:

- Distance
- Average Fuel Economy
- Elapsed Time

Hold the **OK** button to reset all the information.

Stop/Start — If Equipped

Push and release the **up** or **down** arrow button until the Stop/Start icon/title is highlighted in the instrument cluster display. The screen will display the Stop/Start status.

Audio

Push and release the **up** or **down** arrow button until the Stop/Start icon/title is highlighted in the instrument cluster display. The screen will display the Stop/Start status.

Phone Call Status

When a call is incoming, a Phone Call Status pop-up will display on the screen. The pop-up will remain until the phone is answered or ignored.

NOTE:
The call status will temporarily replace the previous media source information displayed on the screen. When the pop-up is no longer displayed, the display will return to the last used screen.

Stored Messages

Push and release the **up** or **down** arrow button until the Messages Menu item is highlighted. This feature shows the number of stored warning messages. Pushing the **right** arrow button will allow you to see what the stored messages are.

When no messages are present, main menu icon will be a closed envelope, and “No Stored Messages” will display.

Screen Setup

NOTE:
The Screen Setup feature can only be used while the vehicle is not in motion.

Push and release the **up** or **down** arrow button until the Screen Setup Menu Icon/Title is highlighted in the instrument cluster display. Push and release the **OK** button to enter the sub-menus and follow the prompts on the screen as needed. The Screen Setup feature allows you to change what information is displayed in the instrument cluster as well as the location in which that information is displayed.

Screen Setup Driver Selectable Items

Upper Left

- None
- Compass (default setting)
- Outside Temp
- Time
- Range
- Average Fuel Economy
- Current Fuel Economy
- Trip A Distance
- Trip B Distance

Upper Center

- None
- Compass
- Outside Temp
- Time
- Range
- Average Fuel Economy
- Current Fuel Economy
- Trip A Distance
- Trip B Distance
- Audio
- Speedometer
- Menu Title (default setting)

Upper Right

- None
- Compass
- Outside Temp (default Setting)
- Time
- Range
- Average Fuel Economy
- Current Fuel Economy
- Trip A Distance
- Trip B Distance

Favorite Menus

- Speedometer
- Vehicle Info
- Driver Assist — If Equipped (show/hide)

- Fuel Economy (show/hide)
- Trip Info (show/hide)
- Stop/Start — If Equipped
- Audio (show/hide)
- Messages
- Screen Setup
- Off Road — If Equipped (show/hide)

Gear Display — Premium Cluster Only

- Full (default)
- Single

Current Gear

- Off (default)
- On

Odometer

- Show (default)
- Hide

Defaults

- Cancel
- Restore

Battery Saver On, Battery Saver Mode Message, And Electrical Load Reduction Actions (If Equipped)

This vehicle is equipped with an Intelligent Battery Sensor (IBS) to perform additional monitoring of the electrical system and status of the vehicle battery.

In cases when the IBS detects charging system failure, or the vehicle battery conditions are deteriorating, electrical load reduction actions will take place to extend the driving time and distance of the vehicle. This is done by reducing power to or turning off non-essential electrical loads.

Load reduction is only active when the engine is running. It will display a message if there is a risk of battery depletion to the point where the vehicle may stall due to lack of electrical supply, or will not restart after the current drive cycle.

When load reduction is activated, the message “Battery Saver On Some Systems May Have Reduced Power” will appear in the instrument cluster.

These messages indicate the vehicle battery has a low state of charge and continues to lose electrical charge at a rate that the charging system cannot sustain.

NOTE:

- The charging system is independent from load reduction. The charging system performs a diagnostic on the charging system continuously.
- If the Battery Charge Warning Light is on it may indicate a problem with the charging system. Refer to "Battery Charge Warning Light" in "Getting To Know Your Instrument Panel" for further information.

The electrical loads that may be switched off (if equipped), and vehicle functions which can be affected by load reduction:

- Heated Seat/Vented Seats/Heated Wheel
- Rear Defroster And Heated Mirrors
- HVAC System
- 115 Volt AC Power Inverter System
- Audio and Telematics System

Loss of battery charge may indicate one or more of the following conditions:

- The charging system cannot deliver enough electrical power to the vehicle system because the electrical loads are larger than the capability of charging system. The charging system is still functioning properly.
- Turning on all possible vehicle electrical loads (e.g. HVAC to max settings, exterior and interior lights, overloaded power outlets +12 Volt, 115 Volt AC, USB ports) during certain driving conditions (city driving, towing, frequent stopping).
- Installing options like additional lights, upfitter electrical accessories, audio systems, alarms and similar devices.
- Unusual driving cycles (short trips separated by long parking periods).
- The vehicle was parked for an extended period of time (weeks, months).
- The battery was recently replaced and was not charged completely.
- The battery was discharged by an electrical load left on when the vehicle was parked.
- The battery was used for an extended period with the engine not running to supply radio, lights, chargers, +12 Volt portable appliances like vacuum cleaners, game consoles and similar devices.

What to do when an electrical load reduction action message is present ("Battery Saver On" or "Battery Saver Mode")

During a trip:

- Reduce power to unnecessary loads if possible:
  - Turn off redundant lights (interior or exterior)
  - Check what may be plugged in to power outlets +12 Volt, 115V AC, USB ports
  - Check HVAC settings (blower, temperature)
  - Check the audio settings (volume)

After a trip:

- Check if any aftermarket equipment was installed (additional lights, upfitter electrical accessories, audio systems, alarms) and review specifications if any (load and ignition off draw currents).
- Evaluate the latest driving cycles (distance, driving time and parking time).
- The vehicle should have service performed if the message is still present during consecutive trips and the evaluation of the vehicle and driving pattern did not help to identify the cause.

WARNING LIGHTS AND MESSAGES

The warning/indicator lights will illuminate in the instrument panel together with a dedicated message and/or acoustic signal when applicable. These indications are indicative and precautionary and as such must not be considered as exhaustive and/or alternative to the information contained in the Owner's Manual, which you are advised to read carefully in all cases. Always refer to the information in this chapter in the event of a failure indication. All active telltales will display first if applicable. The system check menu may appear different based upon equipment options and current vehicle status. Some telltales are optional and may not appear.

Red Warning Lights

— Air Bag Warning Light

This warning light will illuminate to indicate a fault with the air bag, and will turn on for four to eight seconds as a bulb check when the ignition is placed in the ON/RUN or ACC/ON/RUN position. This light will illuminate with a single chime when a fault with the air bag has been detected, it will stay on until the fault is cleared. If the light is either not on during startup, stay on, or turns on while driving, have the system inspected at an authorized dealer as soon as possible.

BRAKE — Brake Warning Light

This warning light monitors various brake functions, including brake fluid level and parking brake application. If the brake light turns on it may indicate that the parking brake is applied, that the brake fluid level is low, or that there is a problem with the anti-lock brake system reservoir.

If the light remains on when the parking brake has been disengaged, and the fluid level is at the full mark on the master cylinder reservoir, it indicates a possible brake hydraulic system malfunction or that a problem with the Brake Booster has been detected by the Anti-Lock Brake System (ABS) / Electronic Stability Control (ESC) system. In this case, the light will remain on until the condition has been corrected. If the problem is related to the brake booster, the ABS pump will run when applying the brake, and a brake pedal pulsation may be felt during each stop.

The dual brake system provides a reserve braking capacity in the event of a failure to a portion of the hydraulic system. A leak in either half of the dual brake system is indicated by the Brake Warning Light, which will turn on when the brake fluid level in the master cylinder has dropped below a specified level.

The light will remain on until the cause is corrected.

NOTE:
The light may flash momentarily during sharp cornering maneuvers, which change fluid level conditions. The vehicle should have service performed, and the brake fluid level checked.

If brake failure is indicated, immediate repair is necessary.

WARNING!
Driving a vehicle with the red brake light on is dangerous. Part of the brake system may have failed. It will take longer to stop the vehicle. You could have a collision. Have the vehicle checked immediately.

Vehicles equipped with the Anti-Lock Brake System (ABS) are also equipped with Electronic Brake Force Distribution (EBD). In the event of an EBD failure, the Brake Warning Light will turn on along with the ABS Light. Immediate repair to the ABS system is required.

Operation of the Brake Warning Light can be checked by turning the ignition switch from the OFF position to the ON/RUN position. The light should illuminate for approximately two seconds. The light should then turn off unless the parking brake is applied or a brake fault is detected. If the

light does not illuminate, have the light inspected by an authorized dealer.

The light also will turn on when the parking brake is applied with the ignition switch in the ON/RUN position.

NOTE:
This light shows only that the parking brake is applied. It does not show the degree of brake application.

— Battery Charge Warning Light

This warning light will illuminate when the battery is not charging properly. If it stays on while the engine is running, there may be a malfunction with the charging system. Contact an authorized dealer as soon as possible.

This indicates a possible problem with the electrical system or a related component.

— Door Open Warning Light

This indicator will illuminate when a door is ajar/open and not fully closed.

NOTE:
If the vehicle is moving, there will also be a single chime.

— Electric Power Steering Fault Warning Light

This warning light will turn on when there's a fault with the Electric Power Steering (EPS) system. Refer to “Electro - Hydraulic Power Steering” in “Starting And Operating” for further information.

WARNING!
Continued operation with reduced assist could pose a safety risk to yourself and others. Service should be obtained as soon as possible.

— Electronic Throttle Control (ETC) Warning Light

This warning light will illuminate to indicate a problem with the Electronic Throttle Control (ETC) system. If a problem is detected while the vehicle is running, the light will either stay on or flash depending on the nature of the problem. Cycle the ignition when the vehicle is safely and completely stopped and the transmission is placed in the PARK position. The light should turn off. If the light remains on with the vehicle running, your vehicle will usually be drivable; however, see an authorized dealer for service as soon as possible.

NOTE:
This light may turn on if the accelerator and brake pedals are pressed at the same time.

If the light continues to flash when the vehicle is running, immediate service is required and you may experience reduced performance, an elevated/rough idle, or engine stall and your vehicle may require towing. The light will come on when the ignition is placed in the ON/RUN or ACC/ON/RUN position and remain on briefly as a bulb check. If the light does not come on during starting, have the system checked by an authorized dealer.

— Engine Coolant Temperature Warning Light

This warning light warns of an overheated engine condition. If the engine coolant temperature is too high, this indicator will illuminate and a single chime will sound. If the temperature reaches the upper limit, a continuous chime will sound for four minutes or until the engine is able to cool: whichever comes first.

If the light turns on while driving, safely pull over and stop the vehicle. If the Air Conditioning (A/C) system is on, turn it off. Also, shift the transmission into NEUTRAL and idle the vehicle. If the temperature reading does not return to normal, turn the engine off immediately and call for service. Refer to "If Your Engine Overheats" in "In Case Of Emergency" for further information.

— Hood Open Warning Light

This indicator will illuminate when the hood is ajar/open and not fully closed.

NOTE:
If the vehicle is moving, there will also be a single chime.

— Oil Pressure Warning Light

This warning light will illuminate to indicate low engine oil pressure. If the light turns on while driving, stop the vehicle, shut off the engine as soon as possible, and contact an authorized dealer. A chime will sound when this light turns on.

Do not operate the vehicle until the cause is corrected. This light does not indicate how much oil is in the engine. The engine oil level must be checked under the hood.

— Oil Temperature Warning Light

This warning light will illuminate to indicate the engine oil temperature is high. If the light turns on while driving, stop the vehicle and shut off the engine as soon as possible. Wait for oil temperature to return to normal levels.

— Seat Belt Reminder Warning Light

This warning light indicates when the driver or passenger seat belt is unbuckled. When the ignition is first placed in the ON/RUN or ACC/ON/RUN position and if the driver's seat belt is unbuckled, a chime will sound and the light will turn on. When driving, if the driver or front passenger seat belt remains unbuckled, the Seat Belt Reminder Light will flash or remain on continuously and a chime will sound.

Refer to "Occupant Restraint Systems" in "Safety" for further information.

— Rear Seat Belt Reminder Warning Light — If Equipped

This light indicates when a rear seat belt is unbuckled in the second row. When the ignition is first placed in the ON/RUN or ACC/ON/RUN position, and if a seat belt in the second row is unbuckled, a light corresponding to the specific seat will turn on in the upper right portion of the instrument cluster display, momentarily replacing the configurable corner information. If a second row seat belt that was buckled at the start of the trip is unbuckled, the Rear Seat Belt Reminder Light will change from green to red and a single chime will sound.

Refer to "Occupant Restraint Systems" in "Safety" for further information.

— Transmission Temperature Warning Light — If Equipped

This warning light will illuminate to warn of a high transmission fluid temperature. This may occur with strenuous usage such as trailer towing. If this light turns on, stop the vehicle and run the engine at idle or slightly faster, with the transmission in PARK (P) or NEUTRAL (N), until the light turns off. Once the light turns off, you may continue to drive normally.

WARNING!
If you continue operating the vehicle when the Transmission Temperature Warning Light is illuminated you could cause the fluid to boil over, come in contact with hot engine or exhaust components and cause a fire.

CAUTION!
Continuous driving with the Transmission Temperature Warning Light illuminated will eventually cause severe transmission damage or transmission failure.

● — Vehicle Security Warning Light — If Equipped

This light will flash at a fast rate for approximately 15 seconds when the vehicle security alarm is arming, and then will flash slowly until the vehicle is disarmed.

Yellow Warning Lights

(ABS) — Anti-Lock Brake (ABS) Warning Light

This warning light monitors the Anti-Lock Brake System (ABS). The light will turn on when the ignition is placed in the ON/RUN or ACC/ON/RUN position and may stay on for as long as four seconds.

If the ABS light remains on or turns on while driving, then the Anti-Lock portion of the brake system is not functioning and service is required as soon as possible. However, the conventional brake system will continue to operate normally, assuming the Brake Warning Light is not also on.

If the ABS light does not turn on when the ignition is placed in the ON/RUN or ACC/ON/RUN position, have the brake system inspected by an authorized dealer.

— Electronic Stability Control (ESC) Active Warning Light — If Equipped

This warning light will indicate when the Electronic Stability Control system is Active. The "ESC Indicator Light" in the instrument cluster will come on when the ignition is placed in the ON/RUN or ACC/ON/RUN position, and when ESC is activated. It should go out with the engine running. If the "ESC Indicator Light" comes on continuously with the engine running, a malfunction has been detected in the ESC system. If this warning light remains on after several ignition cycles, and the vehicle has been driven several miles (kilometers) at speeds greater than 30 mph (48 km/h), see an authorized dealer as soon as possible to have the problem diagnosed and corrected.

- The "ESC OFF Indicator Light" and the "ESC Indicator Light" come on momentarily each time the ignition is placed in the ON/RUN or ACC/ON/RUN position.
- The ESC system will make buzzing or clicking sounds when it is active. This is normal; the sounds will stop when ESC becomes inactive.
- This light will come on when the vehicle is in an ESC event.

— Electronic Stability Control (ESC) OFF Warning Light — If Equipped

This warning light indicates the Electronic Stability Control (ESC) is off.

Each time the ignition is turned to ON/RUN or ACC/ON/RUN, the ESC system will be on, even if it was turned off previously.

— Loose Fuel Filler Cap Warning Light — If Equipped

This warning light will illuminate when the fuel filler cap is loose. Properly close the filler cap to disengage the light. If the light does not turn off, please see an authorized dealer.

— Low Fuel Warning Light

When the fuel level reaches approximately 2.0 gal (7.5 L), this light will turn on and a chime will sound. The light will remain on until fuel is added.

— Low Washer Fluid Warning Light — If Equipped

This warning light will illuminate when the windshield washer fluid is low.

— Engine Check/Malfunction Indicator Warning Light (MIL)

The Engine Check/Malfunction Indicator Light (MIL) is a part of an Onboard Diagnostic System called OBD II that monitors engine and automatic transmission control systems. This warning light will illuminate when the ignition is in the ON/RUN position before engine start. If the bulb does not come on when turning the ignition switch from OFF to ON/RUN, have the condition checked promptly.

Certain conditions, such as a loose or missing gas cap, poor quality fuel, etc., may illuminate the light after engine start. The vehicle should be serviced if the light stays on through several typical driving styles. In most situations, the vehicle will drive normally and will not require towing.

When the engine is running, the MIL may flash to alert serious conditions that could lead to immediate loss of power or severe catalytic converter damage. The vehicle should be serviced by an authorized dealer as soon as possible if this occurs.

WARNING!
A malfunctioning catalytic converter, as referenced above, can reach higher temperatures than in normal operating conditions. This can cause a fire if you drive slowly or park over flammable substances such as dry plants, wood, cardboard, etc. This could result in death or serious injury to the driver, occupants or others.

CAUTION!
Prolonged driving with the Malfunction Indicator Light (MIL) on could cause damage to the vehicle control system. It also could affect fuel economy and driveability. If the MIL is flashing, severe catalytic converter damage and power loss will soon occur. Immediate service is required.

SERV 4WD — Service 4WD Warning Light — If Equipped

This warning light will illuminate to signal a fault with the 4WD system. If the light stays on or comes on during driving, it means that the 4WD system is not functioning properly and that service is required. It is recommend you drive to the nearest service center and have the vehicle serviced immediately.

— Service Forward Collision Warning (FCW) Light — If Equipped

This warning light will illuminate to indicate a fault in the Forward Collision Warning System. Contact an authorized dealer for service.

Refer to “Forward Collision Warning (FCW) With Mitigation” in “Safety” for further information.

— Service Stop/Start System Warning Light — If Equipped

This warning light will illuminate when the Stop/Start system is not functioning properly and service is required. Contact an authorized dealer for service.

— Speed Control Fault Warning Light

This warning light will illuminate to indicate the Speed Control System is not functioning properly and service is required. Contact an authorized dealer.

SWAY BAR — Sway Bar Fault Warning Light

This light will illuminate when there is a fault in the sway bar disconnect system.

(!) — Tire Pressure Monitoring System (TPMS) Warning Light

The warning light switches on and a message is displayed to indicate that the tire pressure is lower than the recommended value and/or that slow pressure loss is occurring. In these cases, optimal tire life and fuel consumption may not be guaranteed.

Should one or more tires be in the condition mentioned above, the display will show the indications corresponding to each tire.

CAUTION!
Do not continue driving with one or more flat tires as handling may be compromised. Stop the vehicle, avoiding sharp braking and steering. If a tire puncture occurs, repair immediately using the dedicated tire repair kit and contact an authorized dealer as soon as possible.

Each tire, including the spare (if provided), should be checked monthly when cold and inflated to the inflation pressure recommended by the vehicle manufacturer on the vehicle placard or tire inflation pressure label. If your vehicle has tires of a different size than the size indicated on the vehicle placard or tire inflation pressure label, you should determine the proper tire inflation pressure for those tires.

As an added safety feature, your vehicle has been equipped with a Tire Pressure Monitoring System (TPMS) that illuminates a low tire pressure telltale when one or more of your tires is significantly under-inflated. Accordingly, when the low tire pressure telltale illuminates, you should stop and check your tires as soon as possible and inflate them to the proper pressure. Driving on a significantly under-inflated tire causes the tire to overheat and can lead to tire failure. Under-inflation also reduces fuel efficiency and tire tread life, and may affect the vehicle's handling and stopping ability.

Please note that the TPMS is not a substitute for proper tire maintenance, and it is the driver's responsibility to maintain correct tire pressure, even if under-inflation has not reached the level to trigger illumination of the TPMS low tire pressure telltale.

Your vehicle has also been equipped with a TPMS malfunction indicator to indicate when the system is not operating properly. The TPMS malfunction indicator is combined with the low tire pressure telltale. When the system detects a malfunction, the telltale will flash for approximately one minute and then remain continuously illuminated. This

sequence will continue upon subsequent vehicle start-ups as long as the malfunction exists. When the malfunction indicator is illuminated, the system may not be able to detect or signal low tire pressure as intended. TPMS malfunctions may occur for a variety of reasons, including the installation of replacement or alternate tires or wheels on the vehicle that prevent the TPMS from functioning properly. Always check the TPMS malfunction telltale after replacing one or more tires or wheels on your vehicle to ensure that the replacement or alternate tires and wheels allow the TPMS to continue to function properly.

CAUTION!
The TPMS has been optimized for the original equipment tires and wheels. TPMS pressures and warning have been established for the tire size equipped on your vehicle. Undesirable system operation or sensor damage may result when using replacement equipment that is not of the same size, type, and/or style. Aftermarket wheels can cause sensor damage. Using aftermarket tire sealants may cause the Tire Pressure Monitoring System (TPMS) sensor to become inoperable. After using an aftermarket tire sealant it is recommended that you take your vehicle to an authorized dealer to have your sensor function checked.

Yellow Indicator Lights

4H / 4WD — 4WD Indicator Light — If Equipped

This light alerts the driver that the vehicle is in the four-wheel drive mode, and the front and rear driveshafts are mechanically locked together forcing the front and rear wheels to rotate at the same speed.

4L / 4WD LOW — 4WD Low Indicator Light — If Equipped

This light alerts the driver that the vehicle is in the four-wheel drive LOW mode. The front and rear driveshafts are mechanically locked together forcing the front and rear wheels to rotate at the same speed. Low range provides a greater gear reduction ratio to provide increased torque at the wheels.

4H / 4WD PART TIME — 4WD Part Time Indicator Light — If Equipped

This light alerts the driver that the vehicle is in the four-wheel drive part time mode, and the front and rear driveshafts are mechanically locked together forcing the front and rear wheels to rotate at the same speed.

— Axle Locker Fault Indicator Light

This light indicates when front and/or rear axle locker fault has been detected.

OFF — Forward Collision Warning Off Indicator Light — If Equipped

This indicator light illuminates to indicate that Forward Collision Warning is off.

— Front And Rear Axle Lock Indicator Light

This light indicates when the front, rear, or both axles have been locked. The telltale will display the lock icon on the front and rear axles to indicate the current lock status.

N / NEUTRAL — Neutral Indicator Light — If Equipped

This light alerts the driver that the vehicle is in the neutral mode.

— Rear Axle Lock Indicator Light

This light indicates when the rear axle lock has been activated.

— Service Adaptive Cruise Control Warning Light — If Equipped

This light will turn on when the ACC is not operating and needs service. Refer to "Adaptive Cruise Control (ACC)" in "Starting And Operating" for further information.

SWAY BAR — Sway Bar Indicator Light — If Equipped

This indicator light will illuminate when the front sway bar is disconnected.

OFF ROAD+ — Off Road+ Indicator Light

This indicator light will illuminate when Off Road+ has been activated.

— Bed Lamp On Indicator Light

This indicator light will illuminate when the Bed Lamp has been activated.

Green Indicator Lights

— Adaptive Cruise Control (ACC) Set With No Target Detected Indicator Light — If Equipped

This light will turn on when the Adaptive Cruise Control is set and there is no target vehicle detected. Refer to "Adaptive Cruise Control (ACC)" in "Starting And Operating" for further information.

— Adaptive Cruise Control (ACC) Set With Target Light — If Equipped

This will display when the ACC is set and a target vehicle is detected. Refer to "Adaptive Cruise Control (ACC)" in "Starting And Operating" for further information.

4H AUTO — 4WD Auto Indicator Light — If Equipped

This light alerts the driver that the vehicle is in the four-wheel drive auto mode. The system will provide power to all four wheels and shift the power between the front and rear axles as needed. This will provide maximum traction in dry and slippery conditions.

— Cruise Control SET Indicator Light — If Equipped With A Premium Instrument Cluster

This indicator light will illuminate when the speed control is set to the desired speed. Refer to "Speed Control" in "Starting And Operating" for further information.

— Front Fog Indicator Light — If Equipped

This indicator light will illuminate when the front fog lights are on.

— Park/Headlight On Indicator Light

This indicator light will illuminate when the park lights or headlights are turned on.

— Stop/Start Active Indicator Light — If Equipped

This indicator light will illuminate when the Stop / Start function is in "Autostop" mode.

— Turn Signal Indicator Lights

When the left or right turn signal is activated, the turn signal indicator will flash independently and the corresponding exterior turn signal lamps will flash. Turn signals can be activated when the multifunction lever is moved down (left) or up (right).

NOTE:

- A continuous chime will sound if the vehicle is driven more than 1 mile (1.6 km) with either turn signal on.
- Check for an inoperative outside light bulb if either indicator flashes at a rapid rate.

White Indicator Lights

— Adaptive Cruise Control (ACC) Ready Light — If Equipped

This light will turn on when the vehicle equipped with Adaptive Cruise Control (ACC) has been turned on, but not set. Refer to "Adaptive Cruise Control (ACC)" in "Starting And Operating" for further information.

2H — Two Wheel Drive High Indicator Light — If Equipped With a Premium Cluster

This light alerts the driver that the vehicle is in the two wheel drive high mode.

— Rear Seat Belt Fastened Indicator Light — If Equipped

This light indicates when a rear seat belt has been buckled in the second row. A telltale will display in the upper right corner of the instrument cluster display to correspond to the specific seating position once the seat belt has been buckled.

Refer to "Occupant Restraint Systems" in "Safety" for further information.

— Rear Seat Belt Reminder Indicator Light — If Equipped

This light indicates when a rear seat belt is unbuckled in the second row. When the ignition is first placed in the ON/RUN or ACC/ON/RUN position, and if a seat belt in the second row is unbuckled, a light corresponding to the specific seat will turn on in the upper right portion of the instrument cluster display, momentarily replacing the configurable corner information. If a second row seat belt that was buckled at the start of the trip is unbuckled, the Rear Seat Belt Reminder Light will change from the buckled to the unbuckled symbol, and a chime will sound.

Refer to "Occupant Restraint Systems" in "Safety" for further information.

— Rear Seat Unoccupied Indicator Light — If Equipped

This light indicates when the rear passenger seats are unoccupied, and will illuminate in the upper right portion of the instrument cluster display, momentarily replacing the configurable corner information.

Refer to “Occupant Restraint Systems” in “Safety” for further information.

— Cruise Control Ready Indicator Light — If Equipped With A Premium Instrument Cluster

This light will turn on when the speed control has been turned on, but not set. Refer to “Speed Control” in “Starting And Operating” for further information.

— Cruise Control SET Indicator Light — If Equipped With Base Instrument Cluster

This indicator light will illuminate when the speed control is set.

Refer to “Speed Control” in “Starting And Operating” for further information.

— Selec - Speed Control (SSC) Indicator Light

This light will turn on when Selec - Speed Control is activated. Selec - Speed Control is available in 4WD Low ONLY.

Refer to Selec - Speed Control (SSC) - If Equipped in “Safety” for further information.

Gray Indicator Lights

— Cruise Control Ready Indicator Light — If Equipped With Base Instrument Cluster

This light will turn on when the speed control has been turned on, but not set. Refer to “Speed Control” in “Starting And Operating” for further information.

Blue Indicator Lights

— High Beam Indicator Light

This indicator light will illuminate to indicate that the high beam headlights are on. With the low beams activated, push the multifunction lever forward (toward the front of the vehicle) to turn on the high beams. Pull the multifunction lever rearward (toward the rear of the vehicle) to turn off the high beams. If the high beams are off, pull the lever toward you for a temporary high beam on, "flash to pass" scenario.

ONBOARD DIAGNOSTIC SYSTEM — OBD II

Your vehicle is equipped with a sophisticated Onboard Diagnostic system called OBD II. This system monitors the performance of the emissions, engine, and transmission control systems. When these systems are operating properly, your vehicle will provide excellent performance and fuel economy, as well as engine emissions well within current government regulations.

If any of these systems require service, the OBD II system will turn on the Malfunction Indicator Light (MIL). It will also store diagnostic codes and other information to assist your service technician in making repairs. Although your vehicle will usually be drivable and not need towing, see an authorized dealer for service as soon as possible.

CAUTION!

- **Prolonged driving with the MIL on could cause further damage to the emission control system. It could also affect fuel economy and driveability. The vehicle must be serviced before any emissions tests can be performed.**
- **If the MIL is flashing while the vehicle is running, severe catalytic converter damage and power loss will soon occur. Immediate service is required.**

Onboard Diagnostic System (OBD II) Cybersecurity

Your vehicle is required to have an Onboard Diagnostic system (OBD II) and a connection port to allow access to information related to the performance of your emissions controls. Authorized service technicians may need to access this information to assist with the diagnosis and service of your vehicle and emissions system.

WARNING!

- **ONLY an authorized service technician should connect equipment to the OBD II connection port in order to read the VIN, diagnose, or service your vehicle.**
- **If unauthorized equipment is connected to the OBD II connection port, such as a driver-behavior tracking device, it may:**
  - **Be possible that vehicle systems, including safety related systems, could be impaired or a loss of vehicle control could occur that may result in an accident involving serious injury or death.**
  - **Access, or allow others to access, information stored in your vehicle systems, including personal information.**

For further information, refer to “Cybersecurity” in “Multimedia”.

EMISSIONS INSPECTION AND MAINTENANCE PROGRAMS

In some localities, it may be a legal requirement to pass an inspection of your vehicle's emissions control system. Failure to pass could prevent vehicle registration.

For states and/or provinces that require an Inspection and Maintenance (I/M), this check verifies the "Malfunction Indicator Light (MIL)" is functioning and is not on when the engine is running, and that the OBD II system is ready for testing.

Normally, the OBD II system will be ready. The OBD II system may **not** be ready if your vehicle was recently serviced, recently had a depleted battery or a battery replacement. If the OBD II system should be determined not ready for the I/M test, your vehicle may fail the test.

Your vehicle has a simple ignition actuated test, which you can use prior to going to the test station. To check if your vehicle's OBD II system is ready, you must do the following:

1. Cycle the ignition switch to the ON position, but do not crank or start the engine.

NOTE:
If you crank or start the engine, you will have to start this test over.

2. As soon as you cycle the ignition switch to the ON position, you will see the "Malfunction Indicator Light (MIL)" symbol come on as part of a normal bulb check.

3. Approximately 15 seconds later, one of two things will happen:

   - The MIL will flash for about 10 seconds and then return to being fully illuminated until you turn OFF the ignition or start the engine. This means that your vehicle's OBD II system is **not ready** and you should **not** proceed to the I/M station.
   - The MIL will not flash at all and will remain fully illuminated until you place the ignition in the off position or start the engine. This means that your vehicle's OBD II system is **ready** and you can proceed to the I/M station.

If your OBD II system is **not ready,** you should see an authorized dealer or repair facility. If your vehicle was recently serviced or had a battery failure or replacement, you may need to do nothing more than drive your vehicle as you normally would in order for your OBD II system to update. A recheck with the above test routine may then indicate that the system is **now ready**.

Regardless of whether your vehicle's OBD II system is ready, if the MIL is illuminated during normal vehicle operation you should have your vehicle serviced before going to the I/M station. The I/M station can fail your vehicle because the MIL is on with the engine running.

SAFETY

SAFETY FEATURES

Anti-Lock Brake System (ABS)

The Anti-Lock Brake System (ABS) provides increased vehicle stability and brake performance under most braking conditions. The system automatically prevents wheel lock, and enhances vehicle control during braking.

The ABS performs a self-check cycle to ensure that the ABS is working properly each time the vehicle is started and driven. During this self-check, you may hear a slight clicking sound, as well as some related motor noises.

ABS is activated during braking when the system detects one or more wheels begin to lock. Road conditions such as ice, snow, gravel, bumps, railroad tracks, loose debris, or panic stops may increase the likelihood of ABS activation(s).

You also may experience the following when ABS activates:

- The ABS motor noise (it may continue to run for a short time after the stop)
- The clicking sound of solenoid valves
- Brake pedal pulsations
- A slight drop of the brake pedal at the end of the stop

NOTE:
These are all normal characteristics of ABS.

WARNING!
• **The ABS contains sophisticated electronic equipment that may be susceptible to interference caused by improperly installed or high output radio transmitting equipment. This interference can cause possible loss of anti-lock braking capability. Installation of such equipment should be performed by qualified professionals.**

(Continued)

WARNING! *(Continued)*

- **Pumping of the Anti-Lock Brakes will diminish their effectiveness and may lead to a collision. Pumping makes the stopping distance longer. Just press firmly on your brake pedal when you need to slow down or stop.**
- **The ABS cannot prevent the natural laws of physics from acting on the vehicle, nor can it increase braking or steering efficiency beyond that afforded by the condition of the vehicle brakes and tires or the traction afforded.**
- **The ABS cannot prevent collisions, including those resulting from excessive speed in turns, following another vehicle too closely, or hydroplaning.**
- **The capabilities of an ABS equipped vehicle must never be exploited in a reckless or dangerous manner that could jeopardize the user's safety or the safety of others.**

NOTE:
ABS is designed to function with the OEM tires. Modification may result in degraded ABS performance.

Anti-Lock Brake Warning Light

The yellow "Anti-Lock Brake Warning Light" will turn on when the ignition is cycled to the ON/RUN mode and may stay on for as long as four seconds.

If the "Anti-Lock Brake Warning Light" remains on or comes on while driving, it indicates that the anti-lock portion of the brake system is not functioning and that service is required. However, the conventional brake system will continue to operate normally if the "Anti-Lock Brake Warning Light" is on.

If the "Anti-Lock Brake Warning Light" is on, the brake system should be serviced as soon as possible to restore the benefits of anti-lock brakes. If the "Anti-Lock Brake Warning Light" does not come on when the ignition is cycled to the ON/RUN mode, have the light repaired as soon as possible.

Electronic Brake Control (EBC) System

Your vehicle is equipped with an advanced Electronic Brake Control (EBC) system . This system includes Electronic Brake Force Distribution (EBD), Anti-Lock Brake System (ABS), Brake Assist System (BAS), Hill Start Assist (HSA), Traction Control System (TCS), Electronic Stability Control (ESC),

and Electronic Roll Mitigation (ERM). These systems work together to enhance both vehicle stability and control in various driving conditions.

Your vehicle may also be equipped with Trailer Sway Control (TSC), Ready Alert Braking (RAB), Selec-Speed Control (SSC), and Rain Brake Support (RBS).

Brake Assist System (BAS)

The Brake Assist System (BAS) is designed to optimize the vehicle's braking capability during emergency braking maneuvers. The system detects an emergency braking situation by sensing the rate and amount of brake application, and then applies optimum pressure to the brakes. This can help reduce braking distances. The BAS complements the Anti-Lock Brake System (ABS) by applying the brakes very quickly, creating the most efficient braking assistance possible. To receive the benefit of the system, you must apply continuous braking pressure during the stopping sequence, (do not "pump" the brakes). Do not reduce brake pedal pressure unless braking is no longer desired. Once the brake pedal is released, the BAS is deactivated.

WARNING!

The Brake Assist System (BAS) cannot prevent the natural laws of physics from acting on the vehicle, nor can it increase the traction afforded by prevailing road conditions. BAS cannot prevent collisions, including those resulting from excessive speed in turns, driving on very slippery surfaces, or hydroplaning. The capabilities of a BAS-equipped vehicle must never be exploited in a reckless or dangerous manner, which could jeopardize the user's safety or the safety of others.

Brake System Warning Light

The red "Brake System Warning Light" will turn on when the ignition is cycled to the ON/RUN mode, and may stay on for as long as four seconds.

If the "Brake System Warning Light" remains on or comes on while driving, it indicates that the brake system is not functioning properly and that immediate service is required. If the "Brake System Warning Light" does not come on when the ignition is cycled to the ON/RUN mode, have the light repaired as soon as possible.

Electronic Brake Force Distribution (EBD)

The Electronic Brake Force Distribution (EBD) function manages the distribution of the braking torque between the front and rear axles, by limiting braking pressure to the rear axle. This is done to prevent overslip of the rear wheels to avoid vehicle instability, and to prevent the rear axle from entering ABS before the front axle.

Electronic Roll Mitigation (ERM)

The Electronic Roll Mitigation (ERM) system anticipates the potential for wheel lift by monitoring the driver's steering wheel input and the speed of the vehicle. When ERM determines that the rate of change of the steering wheel angle and vehicle's speed are sufficient to potentially cause wheel lift, it then applies the appropriate brake and may also reduce engine power to lessen the chance that wheel lift will occur. ERM can only reduce the chance of wheel lift occurring during severe or evasive driving maneuvers; it cannot prevent wheel lift due to other factors, such as road conditions, leaving the roadway, striking objects or other vehicles.

NOTE:
ERM is disabled anytime the ESC is in "Full Off" mode (if equipped). Refer to "Electronic Stability Control (ESC)" in this section for a complete explanation of the available ESC modes.

WARNING!
Many factors, such as vehicle loading, road conditions and driving conditions, influence the chance that wheel lift or rollover may occur. ERM cannot prevent all wheel lift or roll overs, especially those that involve leaving the roadway or striking objects or other vehicles. The capabilities of an ERM-equipped vehicle must never be exploited in a reckless or dangerous manner which could jeopardize the user's safety or the safety of others.

Electronic Stability Control (ESC)

The Electronic Stability Control (ESC) system enhances directional control and stability of the vehicle under various driving conditions. ESC corrects for oversteering or understeering of the vehicle by applying the brake of the appropriate wheel(s) to assist in counteracting the oversteer or understeer condition. Engine power may also be reduced to help the vehicle maintain the desired path.

ESC uses sensors in the vehicle to determine the vehicle path intended by the driver and compares it to the actual path of the vehicle. When the actual path does not match the intended path, ESC applies the brake of the appropriate wheel to assist in counteracting the oversteer or understeer condition.

- Oversteer — when the vehicle is turning more than appropriate for the steering wheel position.
- Understeer — when the vehicle is turning less than appropriate for the steering wheel position.

The "ESC Activation/Malfunction Indicator Light" located in the instrument cluster will start to flash as soon as the ESC system becomes active. The "ESC Activation/Malfunction Indicator Light" also flashes when the Traction Control System (TCS) is active. If the "ESC Activation/Malfunction Indicator Light" begins to flash during acceleration, ease up on the accelerator and apply as little throttle as possible. Be sure to adapt your speed and driving to the prevailing road conditions.

WARNING!

- **Electronic Stability Control (ESC) cannot prevent the natural laws of physics from acting on the vehicle, nor can it increase the traction afforded by prevailing road conditions. ESC cannot prevent accidents, including those resulting from excessive speed in turns, driving on very slippery surfaces, or hydroplaning. ESC also cannot prevent accidents resulting from loss of vehicle control due to inappropriate driver input for the conditions. Only a safe, attentive, and skillful driver can prevent accidents. The capabilities of an ESC equipped vehicle must never be exploited in a reckless or dangerous manner which could jeopardize the user's safety or the safety of others.**

(Continued)

WARNING! *(Continued)*

- **Vehicle modifications, or failure to properly maintain your vehicle, may change the handling characteristics of your vehicle, and may negatively affect the performance of the ESC system. Changes to the steering system, suspension, braking system, tire type and size or wheel size may adversely affect ESC performance. Improperly inflated and unevenly worn tires may also degrade ESC performance. Any vehicle modification or poor vehicle maintenance that reduces the effectiveness of the ESC system can increase the risk of loss of vehicle control, vehicle rollover, personal injury and death.**

ESC Operating Modes

NOTE:
Depending upon model and mode of operation, the ESC system may have multiple operating modes.

ESC On

This is the normal operating mode for the ESC. Whenever the vehicle is started, the ESC system will be in this mode. This mode should be used for most driving conditions. Alternate ESC modes should only be used for specific reasons as noted in the following paragraphs.

Partial Off

The "Partial Off" mode is intended for times when a more spirited driving experience is desired. This mode may modify TCS and ESC thresholds for activation, which allows for more wheel spin than normally allowed. This mode may be useful if the vehicle becomes stuck.

To enter the "Partial Off" mode, momentarily push the "ESC Off" switch and the "ESC Off Indicator Light" will illuminate. To turn the ESC on again, momentarily push the "ESC Off" switch and the "ESC Off Indicator Light" will turn off.

NOTE:
For vehicles with multiple partial ESC modes, a momentary button push will toggle the ESC mode. Multiple momentary button pushed may be required to return to ESC On.

WARNING!

- **When in "Partial Off" mode, the TCS functionality of ESC, (except for the limited slip feature described in the TCS section), has been disabled and the "ESC Off Indicator Light" will be illuminated. When in "Partial Off" mode, the engine power reduction feature of TCS is disabled, and the enhanced vehicle stability offered by the ESC system is reduced.**
- **Trailer Sway control (TSC) is disabled when the ESC system is in the "Partial Off" mode.**

Full Off — If Equipped

This mode is intended for off-highway or off-road use only and should not be used on any public roadways. In this mode, TCS and ESC features are turned OFF. To enter the "Full Off" mode, push and hold the "ESC Off" switch for five seconds while the vehicle is stopped with the engine running. After five seconds, a chime will sound, the "ESC Off Indicator Light" will illuminate, and the "ESC OFF" message will display in the instrument cluster. To turn ESC ON again, momentarily push the "ESC Off" switch.

NOTE:
System may switch from ESC "Full Off" to "Partial Off" mode when vehicle exceeds a predetermined speed. When the vehicle speed slows below the predetermined speed the system will return to ESC "Full Off".

ESC modes may also be affected by off-road modes if so equipped.

WARNING!

- **In the ESC "Full Off" mode, the engine torque reduction and stability features are disabled. Therefore, enhanced vehicle stability offered by the ESC system is unavailable. In an emergency evasive maneuver, the ESC system will not engage to assist in maintaining stability. ESC "Full Off" mode is intended for off-highway or off-road use only.**
- **The Electronic Stability Control (ESC) cannot prevent the natural laws of physics from acting on the vehicle, nor can it increase the traction afforded by prevailing road conditions. ESC cannot prevent all accidents, including those resulting from excessive speed in turns, driving on very slippery surfaces, or hydroplaning. ESC also cannot prevent collisions.**

ESC Activation/Malfunction Indicator Light And ESC OFF Indicator Light

The "ESC Activation/Malfunction Indicator Light" in the instrument cluster will come on when the ignition is turned to the ON mode. It should go out with the engine running. If the "ESC Activation/Malfunction Indicator Light" comes on continuously with the engine running, a malfunction has been detected in the ESC system. If this light remains on after several ignition cycles, and the vehicle has been driven several miles (kilometers) at speeds greater than 30 mph (48 km/h), see an authorized dealer as soon as possible to have the problem diagnosed and corrected.

The "ESC Activation/Malfunction Indicator Light" (located in the instrument cluster) starts to flash as soon as the tires lose traction and the ESC system becomes active. The "ESC Activation/Malfunction Indicator Light" also flashes when the Traction Control System (TCS) is active. If the "ESC Activation/Malfunction Indicator Light" begins to flash during acceleration, ease up on the accelerator and apply as little throttle as possible. Be sure to adapt your speed and driving to the prevailing road conditions.

NOTE:

- The "ESC Activation/Malfunction Indicator Light" and the "ESC OFF Indicator Light" come on momentarily each time the ignition is cycled to the ON/RUN mode.
- Each time the ignition is turned ON, the ESC system will be on even if it was turned off previously.
- The ESC system will make buzzing or clicking sounds when it is active. This is normal; the sounds will stop when ESC becomes inactive following the maneuver that caused the ESC activation.

OFF

The "ESC OFF Indicator Light" indicates the customer has elected to have the Electronic Stability Control (ESC) in a reduced mode.

Hill Start Assist (HSA)

The Hill Start Assist (HSA) system is designed to mitigate roll back from a complete stop while on an incline. If the driver releases the brake while stopped on an incline, HSA will continue to hold the brake pressure for a short period. If the driver does not apply the throttle before this time expires, the system will release brake pressure and the vehicle will roll down the hill as normal.

The following conditions must be met in order for HSA to activate:

- The feature must be enabled.
- The vehicle must be stopped.
- The park brake must be off.
- The driver door must be closed. (If the doors are attached, then the door must be closed. If the doors are detached then the driver's seatbelt must be buckled.)
- The vehicle must be on a sufficient grade.
- The gear selection must match vehicle uphill direction (i.e., vehicle facing uphill is in forward gear; vehicle backing uphill is in REVERSE (R) gear).
- HSA will work in REVERSE gear and all forward gears. The system will not activate if the transmission is in PARK (P) or NEUTRAL (N). For vehicles equipped with a manual transmission, if the clutch is pressed, HSA will remain active.

WARNING!

There may be situations where the Hill Start Assist (HSA) will not activate and slight rolling may occur, such as on minor hills or with a loaded vehicle, or while pulling a trailer. HSA is not a substitute for active driving involvement. It is always the driver's responsibility to be attentive to distance to other vehicles, people, and objects, and most importantly brake operation to ensure safe operation of the vehicle under all road conditions. Your complete attention is always required while driving to maintain safe control of your vehicle. Failure to follow these warnings can result in a collision or serious personal injury.

Disabling And Enabling HSA

This feature can be turned on or turned off. To change the current setting, refer to "Uconnect Settings" in "Multimedia" for further information.

Towing With HSA

HSA will also provide assistance to mitigate roll back while towing a trailer.

WARNING!

- **If you use a trailer brake controller with your trailer, the trailer brakes may be activated and deactivated with the brake switch. If so, there may not be enough brake pressure to hold both the vehicle and the trailer on a hill when the brake pedal is released. In order to avoid rolling down an incline while resuming acceleration, manually activate the trailer brake or apply more vehicle brake pressure prior to releasing the brake pedal.**
- **HSA is not a parking brake. Always apply the parking brake fully when exiting your vehicle. Also, be certain to place the transmission in PARK.**
- **Failure to follow these warnings can result in a collision or serious personal injury.**

Rain Brake Support (RBS)

Rain Brake Support (RBS) may improve braking performance in wet conditions. It will periodically apply a small amount of brake pressure to remove any water buildup on the front brake rotors. It functions when the windshield wipers are in LO or HI speed. When RBS is active, there is no notification to the driver and no driver interaction is required.

Ready Alert Braking (RAB)

Ready Alert Braking (RAB) may reduce the time required to reach full braking during emergency braking situations. It anticipates when an emergency braking situation may occur by monitoring how fast the throttle is released by the driver. The Electronic Brake Control will prepare the brake system for a panic stop.

Selec - Speed Control (SSC) — If Equipped

Selec - Speed Control (SSC) is intended for off-road driving in 4L Range only. SSC maintains vehicle speed by actively controlling engine torque and brakes.

SSC has three states:

1. Off (feature is not enabled and will not activate)
2. Enabled (feature is enabled and ready but activation conditions are not met, or driver is actively overriding with brake or throttle application)
3. Active (feature is enabled and actively controlling vehicle speed)

Enabling SSC

SSC is enabled by pushing the SSC switch, but the following conditions must also be met to enable SSC:

- The driveline is in 4L Range.
- The vehicle speed is below 5 mph (8 km/h).
- The park brake is released.
- The driver door is closed.
- The driver is not applying throttle.

Activating SSC

Once SSC is enabled it will activate automatically once the following conditions are met:

- The driver releases the throttle.
- The driver releases the brake.
- The transmission is in any selection other than PARK.
- Your vehicle speed is below 20 mph (32 km/h).

The set speed for SSC is selectable by the driver, and can be adjusted by using the gear shift +/-. Additionally, the SSC set speed may be reduced when climbing a grade and the level of set speed reduction depends on the magnitude of grade. The following summarizes the SSC set speeds:

SSC Target Set Speeds

- 1st = 0.6 mph (1 km/h)
- 2nd = 1.2 (2 km/h)
- 3rd = 1.8 mph (3 km/h)
- 4th = 2.5 mph (4 km/h)
- 5th = 3.1 mph (5 km/h)
- 6th = 3.7 mph (6 km/h)
- 7th = 4.3 mph (7 km/h)
- 8th = 5 mph (8 km/h)
- 9th = 5.6 mph (9 km/h) — if equipped
- REVERSE = 0.6 mph (1 km/h)
- NEUTRAL = 1.2 mph (2 km/h)
- PARK = SSC remains enabled but not active

NOTE:

- During SSC, the +/- gear selector input is used for SSC target speed selection but will not affect the gear chosen by the transmission. While actively controlling SSC, the transmission will shift appropriately for the driver-selected set speed and corresponding driving conditions.

- SSC performance is influenced by the Terrain Select mode. This difference may be notable to the driver and may be perceived as a varying level of aggressiveness.

Driver Override

The driver may override SSC activation with throttle or brake application at any time.

Deactivating SSC

SSC will be deactivated but remain available if any of the following conditions occur:

- The driver overrides SSC set speed with throttle or brake application.
- The vehicle speed exceeds 20 mph (32 km/h) but remains below 40 mph (64 km/h).
- The vehicle is shifted into PARK.

Disabling SSC

SSC will deactivate and be disabled if any of the following conditions occur:

- The driver pushes the SSC switch.
- The driveline is shifted out of the 4L Range.
- The park brake is applied.
- The driver door opens.
- The vehicle is driven greater than 20 mph (32 km/h) for greater than 70 seconds.
- The vehicle is driven greater than 40 mph (64 km/h). SSC will exist immediately.

Feedback To The Driver

The instrument cluster has an SSC icon and the SSC switch has a lamp which offers feedback to the driver about the state SSC is in.

- The cluster icon and switch lamp will illuminate and remain on solid when SSC is enabled or activated. This is the normal operating conditions for SSC.
- The cluster icon and switch lamp will flash for several seconds then extinguish when the driver pushes the SSC switch but enabled conditions are not met.
- The cluster icon and switch lamp will flash for several seconds then extinguish when SSC disables due to excess speed.
- The cluster icon and switch lamp will flash then extinguish when SSC deactivates due to overheated brakes.

WARNING!
SSC is only intended to assist the driver in controlling vehicle speed when driving in off-road conditions. The driver must remain attentive to the driving conditions and is responsible for maintaining a safe vehicle speed.

Trailer Sway Control (TSC)

Trailer Sway Control (TSC) uses sensors in the vehicle to recognize an excessively swaying trailer and will take the appropriate actions to attempt to stop the sway. TSC will become active automatically once an excessively swaying trailer is recognized.

NOTE:
TSC cannot stop all trailers from swaying. Always use caution when towing a trailer and follow the trailer tongue weight recommendations. Refer to "Trailer Towing" in "Starting And Operating" for further information.

When TSC is functioning, the "ESC Activation/Malfunction Indicator Light" will flash, the engine power may be reduced, and you may feel the brakes being applied to individual wheels to attempt to stop the trailer from swaying. TSC is disabled when the ESC system is in the "Partial Off" or "Full Off" modes.

WARNING!
If TSC activates while driving, slow the vehicle down, stop at the nearest safe location, and adjust the trailer load to eliminate trailer sway.

Traction Control System (TCS)

The Traction Control System (TCS) monitors the amount of wheel spin for each of the driven wheels. If wheel spin is detected, the TCS may apply brake pressure to the spinning wheel(s) and/or reduce engine power to provide enhanced acceleration and stability. A feature of the TCS, Brake Limited Differential (BLD), functions similar to a limited slip differential and controls the wheel spin across a driven axle. If one wheel on a driven axle is spinning faster than the other, the system will apply the brake of the spinning wheel. This will allow more engine torque to be applied to the wheel that is not spinning. BLD may remain enabled even if TCS and ESC are in a reduced mode.

AUXILIARY DRIVING SYSTEMS

Blind Spot Monitoring (BSM) — If Equipped

The Blind Spot Monitoring (BSM) system uses two radar-based sensors, located inside the taillights, to detect highway licensable vehicles (automobiles, trucks, motorcycles, etc.) that enter the blind spot zones from the rear/front/side of the vehicle.

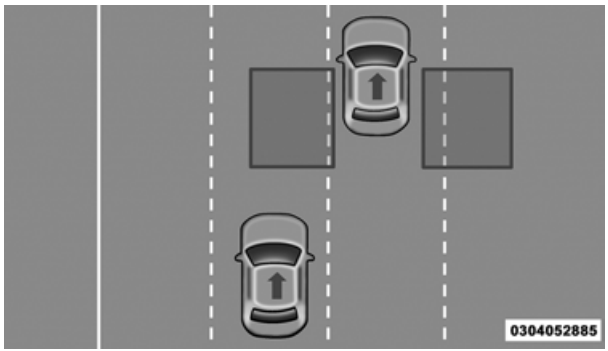

Rear Detection Zones

When the vehicle is started, the BSM warning light will momentarily illuminate in both outside rear view mirrors to let the driver know that the system is operational. The BSM system sensors operate when the vehicle is in any forward gear or REVERSE (R) and enters stand-by mode when the vehicle is in PARK (P).

The BSM detection zone covers approximately one lane width on both sides of the vehicle 12 ft (3.8 m). The zone length starts at the outside rear view mirror and extends approximately 10 ft (3 m) beyond the rear bumper of the vehicle. The BSM system monitors the detection zones on both sides of the vehicle when the vehicle speed reaches approximately 6 mph (10 km/h) or higher and will alert the driver of vehicles in these areas.

NOTE:

- The BSM system DOES NOT alert the driver about rapidly approaching vehicles that are outside the detection zones.
- The BSM system detection zone DOES NOT change if your vehicle is towing a trailer. Therefore, visually verify the adjacent lane is clear for both your vehicle and trailer before making a lane change. If the trailer or other object (i.e., bicycle, sports equipment) extends beyond the side of your vehicle, this may result in the BSM warning light remaining illuminated the entire time the vehicle is in a forward gear.
- The Blind Spot Monitoring (BSM) system may experience drop outs (blinking on and off) of the side mirror Warning

Indicator lamps when a motorcycle or any small object remains at the side of the vehicle for extended periods of time (more than a couple of seconds).

The area on the taillights, where the radar sensors are located, must remain free of snow, ice, and dirt/road contamination so that the BSM system can function properly. Do not block the taillights where the radar sensors are located with foreign objects (bumper stickers, bicycle racks, etc.).

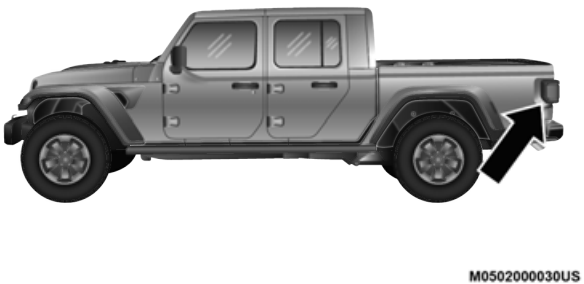

BSM Radar Location (Left Side Shown)

The BSM system notifies the driver of objects in the detection zones by illuminating the BSM warning light located in the outside mirrors in addition to sounding an audible (chime) alert and reducing the radio volume. Refer to "Modes Of Operation" in this chapter for further information.

Warning Light Location

The BSM system monitors the detection zone from three different entry points (side, rear, front) while driving to see if an alert is necessary. The BSM system will issue an alert during these types of zone entries.

Entering From The Side

Vehicles that move into your adjacent lanes from either side of the vehicle.

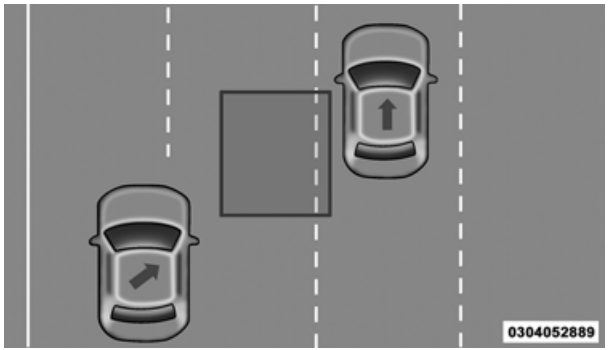

Side Monitoring

Entering From The Rear

Vehicles that come up from behind your vehicle on either side and enter the rear detection zone with a relative speed of less than 30 mph (48 km/h).

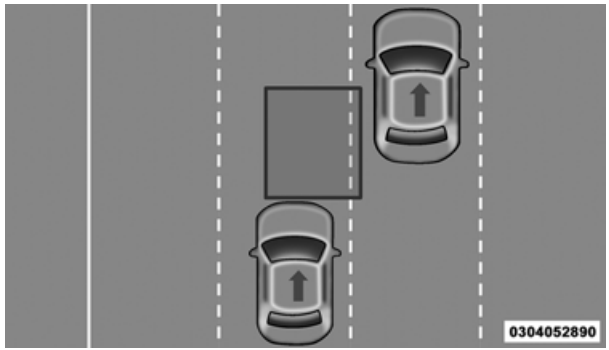

Rear Monitoring

Overtaking Traffic

If you pass another vehicle slowly with a relative speed less than 15 mph (24 km/h) and the vehicle remains in the blind spot for approximately 1.5 seconds, the warning light will be illuminated. If the difference in speed between the two vehicles is greater than 15 mph (24 km/h), the warning light will not illuminate.

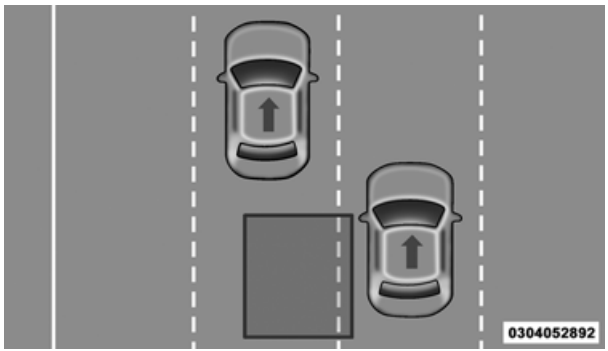

Overtaking/Approaching

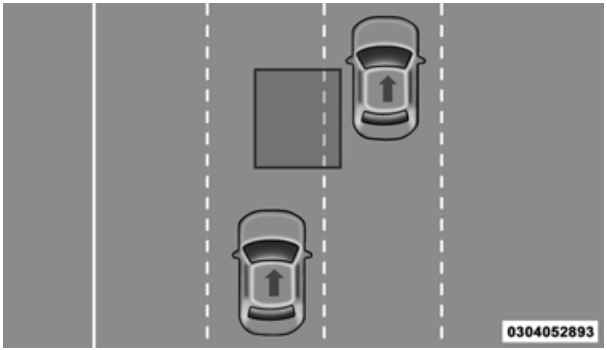

Overtaking/Passing

The BSM system is designed not to issue an alert on stationary objects such as guardrails, posts, walls, foliage, berms, etc. However, occasionally the system may alert on such objects. This is normal operation and your vehicle does not require service.

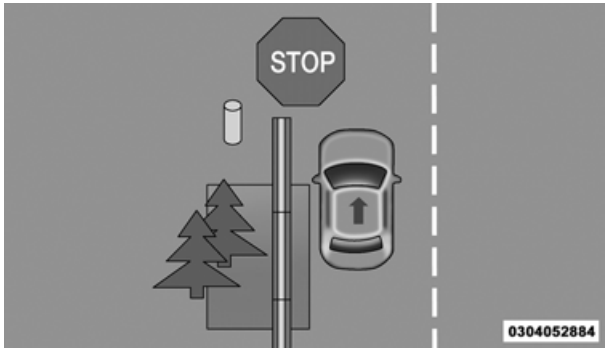

Stationary Objects

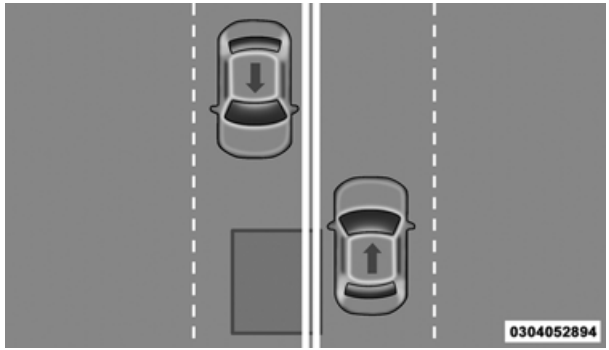

Opposing Traffic

The BSM system will not alert you of objects that are traveling in the opposite direction of the vehicle in adjacent lanes.

WARNING!
The Blind Spot Monitoring system is only an aid to help detect objects in the blind spot zones. The BSM system is not designed to detect pedestrians, bicyclists, or animals. Even if your vehicle is equipped with the BSM system, always check your vehicle's mirrors, glance over your shoulder, and use your turn signal before changing lanes. Failure to do so can result in serious injury or death.

Rear Cross Path (RCP)

The Rear Cross Path (RCP) feature is intended to aid the driver when backing out of parking spaces where their vision of oncoming vehicles may be blocked. Proceed slowly and cautiously out of the parking space until the rear end of the vehicle is exposed. The RCP system will then have a clear view of the cross traffic and if an oncoming vehicle is detected, alert the driver.

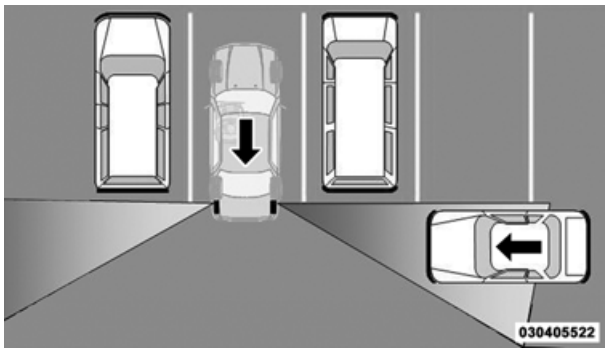

RCP Detection Zones

RCP monitors the rear detection zones on both sides of the vehicle, for objects that are moving toward the side of the vehicle with a minimum speed of approximately 3 mph (5 km/h), to objects moving a maximum of approximately 20 mph (32 km/h), such as in parking lot situations.

NOTE:
In a parking lot situation, oncoming vehicles can be obscured by vehicles parked on either side. If the sensors are blocked by other structures or vehicles, the system will not be able to alert the driver.

When RCP is on and the vehicle is in REVERSE, the driver is alerted using both the visual and audible alarms, including reducing the radio volume.

WARNING!
Rear Cross Path Detection (RCP) is not a back up aid system. It is intended to be used to help a driver detect an oncoming vehicle in a parking lot situation. Drivers must be careful when backing up, even when using RCP. Always check carefully behind your vehicle, look behind you, and be sure to check for pedestrians, animals, other vehicles, obstructions, and blind spots before backing up. Failure to do so can result in serious injury or death.

Modes Of Operation

Three selectable modes of operation are available in the Uconnect System. Refer to "Uconnect Settings" in "Multimedia" for further information.

Blind Spot Alert Lights Only

When operating in Blind Spot Alert mode, the BSM system will provide a visual alert in the appropriate side view mirror based on a detected object. However, when the system is operating in Rear Cross Path (RCP) mode, the system will respond with both visual and audible alerts when a detected object is present. Whenever an audible alert is requested, the radio is muted.

Blind Spot Alert Lights/Chime

When operating in Blind Spot Alert Lights/Chime mode, the BSM system will provide a visual alert in the appropriate side view mirror based on a detected object. If the turn signal is then activated, and it corresponds to an alert present on that side of the vehicle, an audible chime will also be sounded. Whenever a turn signal and detected object are present on the same side at the same time, both the visual and audible alerts will be issued. In addition to the audible alert, the radio (if on) will also be muted.

NOTE:
Whenever an audible alert is requested by the BSM system, the radio is also muted.

When the system is in RCP, the system shall respond with both visual and audible alerts when a detected object is present. Whenever an audible alert is requested, the radio is also muted. Turn/hazard signal status is ignored; the RCP state always requests the chime.

Blind Spot Alert Off

When the BSM system is turned off there will be no visual or audible alerts from either the BSM or RCP systems.

NOTE:
The BSM system will store the current operating mode when the vehicle is shut off. Each time the vehicle is started the previously stored mode will be recalled and used.

General Information

This device complies with Part 15 of the FCC Rules and with Innovation, Science and Economic Development Canada license-exempt RSS standard(s). Operation is subject to the following two conditions:

1. This device may not cause harmful interference, and
2. This device must accept any interference received, including interference that may cause undesired operation.

Le présent appareil est conforme aux CNR d`Innovation, Science and Economic Development applicables aux appareils radio exempts de licence. L'exploitation est autorisée aux deux conditions suivantes:

1. l'appareil ne doit pas produire de brouillage, et
2. l'utilisateur de l'appareil doit accepter tout brouillage radioélectrique subi, même si le brouillage est susceptible d'en compromettre le fonctionnement.

La operación de este equipo está sujeta a las siguientes dos condiciones:

1. es posible que este equipo o dispositivo no cause interferencia perjudicial y
2. este equipo o dispositivo debe aceptar cualquier interferencia, incluyendo la que pueda causar su operación no deseada.

NOTE:
Changes or modifications not expressly approved by the party responsible for compliance could void the user's authority to operate the equipment.

Forward Collision Warning (FCW) With Mitigation — If Equipped

The Forward Collision Warning (FCW) system with mitigation provides the driver with audible warnings, visual warnings (within the instrument cluster display), and may apply a brake jerk to warn the driver when it detects a potential frontal collision. The warnings and limited braking are intended to provide the driver with enough time to react, avoid or mitigate the potential collision.

NOTE:
FCW monitors the information from the forward looking sensors as well as the Electronic Brake Controller (EBC), to calculate the probability of a forward collision. When the system determines that a forward collision is probable, the driver will be provided with audible and visual warnings as well as a possible brake jerk warning.

If the driver does not take action based upon these progressive warnings, then the system will provide a limited level of active braking to help slow the vehicle and mitigate the potential forward collision. If the driver reacts to the warnings by braking and the system determines that the driver intends to avoid the collision by braking but has not applied sufficient brake force, the system will compensate and provide additional brake force as required.

If a FCW with Mitigation event begins at a speed below 32 mph (52 km/h), the system may provide the maximum braking possible to mitigate the potential forward collision. If the Forward Collision Warning with Mitigation event stops the vehicle completely, the system will hold the vehicle at standstill for two seconds and then release the brakes.

FCW Message

When the system determines a collision with the vehicle in front of you is no longer probable, the warning message will be deactivated.

NOTE:

- The minimum speed for FCW activation is 3 mph (5 km/h).
- The FCW alerts may be triggered on objects other than vehicles such as guard rails or sign posts based on the course prediction. This is expected and is a part of normal FCW activation and functionality.

- It is unsafe to test the FCW system. To prevent such misuse of the system, after four Active Braking events within an ignition cycle, the Active Braking portion of FCW will be deactivated until the next ignition cycle.
- The FCW system is intended for on-road use only. If the vehicle is taken off-road, the FCW system should be deactivated to prevent unnecessary warnings to the surroundings.

WARNING!
Forward Collision Warning (FCW) is not intended to avoid a collision on its own, nor can FCW detect every type of potential collision. The driver has the responsibility to avoid a collision by controlling the vehicle via braking and steering. Failure to follow this warning could lead to serious injury or death.

FCW Braking Status And Sensitivity

The FCW Sensitivity and Active Braking status are programmable through the Uconnect System. Refer to “Uconnect Settings” in “Multimedia” for further information.

When the sensitivity of FCW is set to the “Medium” setting and the system status is “Warning and Braking”, this allows the system to warn the driver of a possible collision with the vehicle in front using audible/visual warnings and it applies autonomous braking

Changing the FCW status to “Far” setting allows the system to warn the driver of a possible collision with the vehicle in front using audible/visual warning when the latter is at a farther distance than "Medium" setting. This provides the most reaction time to avoid a possible collision.

Changing the FCW status to the “Near” setting, allows the system to warn the driver of a possible collision with the vehicle in front when the distance between the vehicle in the front is much closer. This setting provides less reaction time than the “Far” and “Medium” settings, which allows for a more dynamic driving experience.

NOTE:

- Changing the FCW status to “Only Warning” prevents the system from providing limited active braking, or additional brake support if the driver is not braking adequately in the event of a potential frontal collision, but maintains the audible and visual warnings.

- Changing the FCW status to "Off" prevents the system from providing autonomous braking, or additional brake support if the driver is not braking adequately in the event of a potential frontal collision.
- The system will retain the last setting selected by the driver after ignition shut down.
- FCW may not react to irrelevant objects such as overhead objects, ground reflections, objects not in the path of the vehicle, stationary objects that are far away, oncoming traffic, or leading vehicles with the same or higher rate of speed.
- FCW disables in the same manner as ACC, and will display a screen indicating that the feature is unavailable when it has been disabled.

FCW Limited Warning

If the instrument cluster displays "ACC/FCW Limited Functionality" or "ACC/FCW Limited Functionality Clean Front Windshield" momentarily, there may be a condition that limits FCW functionality. Although the vehicle is still drivable under normal conditions, the active braking may not be fully available. Once the condition that limited the system performance is no longer present, the system will return to its full performance state. If the problem persists, see your authorized dealer.

Service FCW Warning

If the system turns off, and the instrument cluster displays:

- ACC/FCW Unavailable Service Required
- Cruise/FCW Unavailable Service Required

This indicates there is an internal system fault. Although the vehicle is still drivable under normal conditions, have the system checked by an authorized dealer.

General Information

This device complies with Part 15 of the FCC Rules and with Innovation, Science and Economic Development Canada license-exempt RSS standard(s). Operation is subject to the following two conditions:

1. This device may not cause harmful interference, and
2. This device must accept any interference received, including interference that may cause undesired operation.

Le présent appareil est conforme aux CNR d`Innovation, Science and Economic Development applicables aux appar-

eils radio exempts de licence. L'exploitation est autorisée aux deux conditions suivantes:

1. l'appareil ne doit pas produire de brouillage, et
2. l'utilisateur de l'appareil doit accepter tout brouillage radioélectrique subi, même si le brouillage est susceptible d'en compromettre le fonctionnement.

La operación de este equipo está sujeta a las siguientes dos condiciones:

1. es posible que este equipo o dispositivo no cause interferencia perjudicial y
2. este equipo o dispositivo debe aceptar cualquier interferencia, incluyendo la que pueda causar su operación no deseada.

NOTE:
Changes or modifications not expressly approved by the party responsible for compliance could void the user's authority to operate the equipment.

Tire Pressure Monitor System (TPMS)

The Tire Pressure Monitor System (TPMS) will warn the driver of a low tire pressure based on the vehicle recommended cold placard pressure.

NOTE:
The alert warning on the cluster will stay on until the tire is inflated to the placard pressure.

The tire pressure will vary with temperature by approximately 1 psi (7 kPa) for every 12°F (6.5°C). This means that when the outside temperature decreases, the tire pressure will decrease. Tire pressure should always be set based on cold inflation tire pressure. This is defined as the tire pressure after the vehicle has not been driven for at least three hours, or driven less than 1 mile (1.6 km) after a three hour period. The cold tire inflation pressure must not exceed the maximum inflation pressure molded into the tire sidewall. Refer to "Tires" in "Servicing And Maintenance" for information on how to properly inflate the vehicle's tires. The tire pressure will also increase as the vehicle is driven. This is normal and there should be no adjustment for this increased pressure.

The TPMS will warn the driver of a low tire pressure if the tire pressure falls below the low-pressure warning limit for any reason, including low temperature effects and natural pressure loss through the tire.

The TPMS will continue to warn the driver of low tire pressure as long as the condition exists, and will not turn off until the tire pressure is at or above the recommended cold

placard pressure. Once the low tire pressure warning (Tire Pressure Monitoring System Warning Light) illuminates, you must increase the tire pressure to the recommended cold placard pressure in order for the TPMS Light to turn off.

The system will automatically update and the TPMS Warning Light will turn off once the system receives the updated tire pressures. The vehicle may need to be driven for up to 20 minutes above 15 mph (24 km/h) in order for the TPMS to receive this information.

For example, your vehicle may have a recommended cold (parked for more than three hours) placard pressure of 33 psi (227 kPa). If the ambient temperature is 68°F (20°C) and the measured tire pressure is 28 psi (193 kPa), a temperature drop to 20°F (-7°C) will decrease the tire pressure to approximately 24 psi (165 kPa). This tire pressure is low enough to turn on the TPMS Warning Light. Driving the vehicle may cause the tire pressure to rise to approximately 28 psi (.193 kPa), but the TPMS Warning Light will still be on. In this situation, the TPMS Warning Light will turn off only after the tires are inflated to the vehicle's recommended cold placard pressure value.

NOTE:
When filling warm tires, the tire pressure may need to be increased up to an additional 4 psi (28 kPa) above the recommended cold placard pressure in order to turn the TPMS Warning Light off.

CAUTION!

- **The TPMS has been optimized for the original equipment tires and wheels. TPMS pressures and warning have been established for the tire size equipped on your vehicle. Undesirable system operation or sensor damage may result when using replacement equipment that is not of the same size, type, and/or style. The TPM sensor is not designed for use on aftermarket wheels, and may contribute to a poor overall system performance. Customers are encouraged to use OEM wheels to assure TPMS feature operation.**
- **Using aftermarket tire sealants may cause the Tire Pressure Monitoring System (TPMS) sensor to become inoperable. After using an aftermarket tire sealant it is recommended that you take your vehicle to an authorized dealer to have your sensor function checked.**

(Continued)

CAUTION! *(Continued)*

- **After inspecting or adjusting the tire pressure always reinstall the valve stem cap. This will prevent moisture and dirt from entering the valve stem, which could damage the TPMS sensor.**

NOTE:

- The TPMS is not intended to replace normal tire care and maintenance, or to provide warning of a tire failure or condition.
- Driving on a significantly underinflated tire causes the tire to overheat and can lead to tire failure. Underinflation also reduces fuel efficiency and tire tread life, and may affect the vehicle's handling and stopping ability.
- The TPMS is not a substitute for proper tire maintenance, and it is the driver's responsibility to maintain correct tire pressure using an accurate tire pressure gauge, even if underinflation has not reached the level to trigger illumination of the TPMS Warning Light.
- Seasonal temperature changes will affect tire pressure, and the TPMS will monitor the actual tire pressure in the tire.

System Operation

The Tire Pressure Monitor System (TPMS) uses wireless technology with wheel rim mounted electronic sensors to monitor tire pressure levels. Sensors, mounted to each wheel as part of the valve stem, transmit tire pressure readings to the receiver module.

Tire Pressure Monitoring Display

NOTE:
It is particularly important for you to check the tire pressure in all of the tires on your vehicle monthly and to maintain the proper pressure.

The TPMS consists of the following components:

- Receiver module
- Four tire pressure monitoring sensors
- Various tire pressure monitoring system messages, which display in the instrument cluster
- Tire pressure monitoring telltale light

Tire Pressure Monitoring Low Pressure Warnings

The TPMS Warning Light will illuminate in the instrument cluster and a chime will sound when tire pressure is low in one or more of the four active road tires. In addition, the instrument cluster will display a "Tire Low" message for a minimum of five seconds, an "Inflate to XX" message and a graphic showing the pressure values of each tire with the low tire pressure values in a different color.

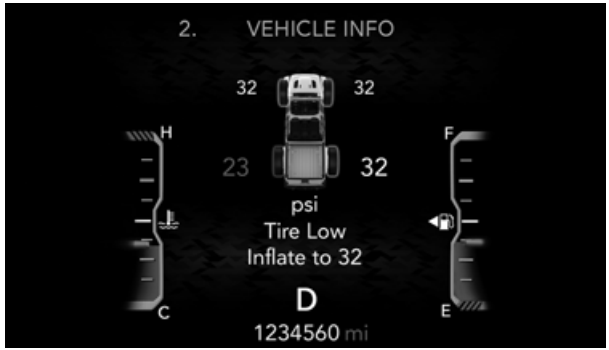

Tire Pressure Monitoring Low Pressure Warning

Should this occur, you should stop as soon as possible and inflate the tires with low pressure (those in a different color in the instrument cluster graphic) to the vehicle's recommended cold placard pressure value as shown in the "Inflate to XX" message. Once the system receives the updated tire pressures, the system will automatically update, the pressure values in the graphic display in the instrument cluster will return to their original color, and the TPMS Warning Light will turn off.

NOTE:
When filling warm tires, the tire pressure may need to be increased up to an additional 4 psi (28 kPa) above the recommended cold placard pressure in order to turn the TPMS Warning Light off.

The vehicle may need to be driven for up to 20 minutes above 15 mph (24 km/h) in order for the TPMS to receive this information.

Service TPMS Warning

When a system fault is detected, the TPMS Warning Light will flash on and off for 75 seconds and then remain on solid. The system fault will also sound a chime. In addition, the instrument cluster will display a "SERVICE TIRE PRESSURE SYSTEM" message for a minimum of five seconds and then display dashes (- -) in place of the pressure value to indicate which sensor is not being received.

If the ignition is cycled, this sequence will repeat, providing the system fault still exists. If the system fault no longer exists, the TPMS Warning Light will no longer flash, and the “SERVICE TIRE PRESSURE SYSTEM” message will no longer display, and a pressure value will display in place of the dashes. A system fault can occur due to any of the following:

- Jamming due to electronic devices or driving next to facilities emitting the same radio frequencies as the TPMS sensors.
- Installing some form of aftermarket window tinting that affects radio wave signals.
- Lots of snow or ice around the wheels or wheel housings.
- Using tire chains on the vehicle.
- Using wheels/tires not equipped with TPMS sensors.

Vehicles With Compact Spare or Non-Matching Full Size Spare

1. The compact spare tire or non-matching full size does not have a tire pressure monitoring sensor. Therefore, the TPMS will not monitor the pressure in the compact spare tire.

2. If you install the compact or non-matching full size spare tire in place of a road tire that has a pressure below the low-pressure warning limit, upon the next ignition cycle, the TPMS Warning Light will remain on and a chime will sound. In addition, the graphic in the instrument cluster will still display a different color pressure value and an "Inflate to XX" message.

3. After driving the vehicle for up to 20 minutes above 15 mph (24 km/h), the TPMS Warning Light will flash on and off for 75 seconds and then remain on solid. In addition, the instrument cluster will display a "Service Tire Pressure System" message for five seconds and then display dashes (- -) in place of the pressure value.

4. For each subsequent ignition cycle, a chime will sound, the TPMS Warning Light will flash on and off for3 75 seconds and then remain on solid, and the instrument cluster will display a "SERVICE TIRE PRESSURE SYSTEM" message for five seconds and then display dashes (- -) in place of the pressure value.

5. Once you repair or replace the original road tire and reinstall it on the vehicle in place of the compact spare or non-matching full size, the TPMS will update automatically. In addition, the TPMS Warning Light will turn off and the graphic in the instrument cluster will display a new pressure value instead of dashes (- -), as long as no tire pressure is below the low-pressure warning limit in any of the four active road tires. The vehicle may need to be driven for up to 20 minutes above 15 mph (24 km/h) in order for the TPMS to receive this information.

Vehicles With a Full Size Matching Spare

1. If your vehicle is equipped with a matching full-size spare wheel and tire assembly, it has a tire pressure monitoring sensor, and can be monitored by the Tire Pressure Monitoring System (TPMS) when swapped with a low pressure road tire.

2. In the event that the matching full-size spare tire is swapped with a low pressure road tire, the next ignition switch cycle will still show the TPMS Warning Light to be on, a chime to sound, an "Inflate to XX" message to appear in the instrument cluster, and the graphic display will still show the low tire pressure value in a different color.

3. Driving the vehicle for up to 20 minutes above 15 mph (24 km/h) will turn off the TPMS Warning Light as long as none of road tires are below the low pressure warning threshold.

Tire Fill Alert

This feature notifies the user when the placard tire pressure is attained while inflating or deflating the tire.

The customer may choose to disable or enable the Tire Fill Alert feature in the apps menu of the Uconnect System.

NOTE:

- Only one tire can be filled at a time when using the Tire Fill Alert system.
- The Tire Fill Alert feature cannot be entered if an existing TPM system fault is set to “active” or if the system is in deactivation mode (if equipped).

The system will be activated when there is over 1.5 psi (10 kPa) of change in tire pressure. The ignition must be in the ON/RUN mode with the transmission in PARK for vehicles equipped with an Automatic Transmission. For vehicles equipped with a Manual Transmission, the park brake must be applied.

NOTE:
It is not required to have the engine running to enter Tire Fill Alert Mode.

The hazard lamps will come on to confirm the vehicle is in Tire Fill Alert mode.

When Tire Fill Alert Mode is entered, the tire pressure display screen will be displayed in the instrument cluster.

Operation:

- The horn will chirp to let the user know when to stop filling the tire, when it reaches recommended pressure.
- The horn will chirp three times if the tire is over filled and will continue to chirp every five seconds if the user continues to inflate the tire.
- The horn will chirp once again when enough air is let out to reach proper inflation level.
- The horn will also chirp three times if the tire is then under-inflated and will continue to chirp every five seconds if the user continues to deflate the tire.

Selectable Tire Fill Alert — If Equipped

The Selectable Tire Fill Alert (STFA) system is an optional feature that is included as part of the normal Tire Fill Alert system. The system is designed to allow you to select a pressure to inflate or deflate the vehicle's front and rear axle tires to, and to provide feedback while inflating or deflating the vehicle's tires.

In the Selectable Tire Fill Alert application, which is located in the apps menu of the Uconnect System, you will be able to select a pressure setting for both the front and rear axle tire pressures by scrolling through a pressure range from XX to 15 psi in 1 psi increments for each axle setting.

XX = the vehicle's cold placard pressure values for the front and rear axles as shown on the vehicle placard pressure label.

You may also store pressure values chosen for each axle in the Uconnect System application as preset pressure values. Up to two sets of preset pressure values can be stored in the Uconnect System for the front and rear axle. Once you select the tire pressures for the front and rear axles that you want to inflate or deflate to, you can begin inflating or deflating one tire at a time.

NOTE:
The STFA system will only support inflating or deflating one tire at a time.

The system will be activated when the TPM receiver module detects a change in tire pressure. The ignition must be in the ON/RUN mode, with the transmission in PARK in vehicles with an automatic transmission, and in NEUTRAL with the parking brake engaged in vehicles with a manual transmission. The hazard lamps will come on to confirm the vehicle is in Tire Fill Alert mode.

When Tire Fill Alert Mode is entered, the tire pressure screen will be displayed in the instrument cluster.

Horn chirps will indicate STFA status as tires are inflated/deflated. The horn will chirp under the following STFA states:

1. The horn will chirp once when the selected pressure is reached to let you know when to stop inflating or deflating the tire.
2. The horn will chirp three times if the tire is over-inflated or over-deflated.
3. The horn will chirp once again when enough air is added or removed to reach proper selected pressure level.

TPMS Deactivation — If Equipped

The TPMS can be deactivated if replacing all four wheel and tire assemblies (road tires) with wheel and tire assemblies that do not have TPMS sensors, such as when installing winter wheel and tire assemblies on your vehicle.

To deactivate the TPMS, first replace all four wheel and tire assemblies (road tires) with tires not equipped with Tire Pres-

sure Monitoring (TPM) Sensors. Then, drive the vehicle for 20 minutes above 15 mph (24 km/h). The TPMS will chime, the TPMS Warning Light will flash on and off for 75 seconds and then remain on. The instrument cluster will display the "SERVICE TIRE PRESSURE SYSTEM" message and then display dashes (--) in place of the pressure values.

Beginning with the next ignition cycle, the TPMS will no longer chime or display the "SERVICE TIRE PRESSURE SYSTEM" message in the instrument cluster but dashes (--) will remain in place of the pressure values.

To reactivate the TPMS, replace all four wheel and tire assemblies (road tires) with tires equipped with TPMS sensors. Then, drive the vehicle for up to 20 minutes above 15 mph (24 km/h). The TPMS will chime, the TPMS Warning Light will flash on and off for 75 seconds and then turn off. The instrument cluster will display the "SERVICE TIRE PRESSURE SYSTEM" message and then display pressure values in place of the dashes. On the next ignition cycle the "SERVICE TIRE PRESSURE SYSTEM" message will no longer be displayed as long as no system fault exists.

General Information

This device complies with Part 15 of the FCC Rules and with Innovation, Science and Economic Development Canada license-exempt RSS standard(s). Operation is subject to the following two conditions:

1. This device may not cause harmful interference, and
2. This device must accept any interference received, including interference that may cause undesired operation.

Le présent appareil est conforme aux CNR d`Innovation, Science and Economic Development applicables aux appareils radio exempts de licence. L'exploitation est autorisée aux deux conditions suivantes:

1. l'appareil ne doit pas produire de brouillage, et
2. l'utilisateur de l'appareil doit accepter tout brouillage radioélectrique subi, même si le brouillage est susceptible d'en compromettre le fonctionnement.

La operación de este equipo está sujeta a las siguientes dos condiciones:

1. es posible que este equipo o dispositivo no cause interferencia perjudicial y
2. este equipo o dispositivo debe aceptar cualquier interferencia, incluyendo la que pueda causar su operación no deseada.

NOTE:
Changes or modifications not expressly approved by the party responsible for compliance could void the user's authority to operate the equipment.

OCCUPANT RESTRAINT SYSTEMS

Some of the most important safety features in your vehicle are the restraint systems:

Occupant Restraint Systems Features

- Seat Belt Systems
- Supplemental Restraint Systems (SRS) Air Bags
- Child Restraints

Some of the safety features described in this section may be standard equipment on some models, or may be optional equipment on others. If you are not sure, ask an authorized dealer.

Important Safety Precautions

Please pay close attention to the information in this section. It tells you how to use your restraint system properly, to keep you and your passengers as safe as possible.

Here are some simple steps you can take to minimize the risk of harm from a deploying air bag:

1. Children 12 years old and under should always ride buckled up in the rear seat of a vehicle with a rear seat.
2. A child who is not big enough to wear the vehicle seat belt properly (Refer to "Child Restraints" in this section for further information) must be secured in the appropriate child restraint or belt-positioning booster seat in a rear seating position. (Refer to "Child Restraints" in this section for further information).
3. If a child from 2 to 12 years old (not in a rear-facing child restraint) must ride in the front passenger seat, move the seat as far back as possible and use the proper child restraint (Refer to "Child Restraints" in this section for further information).
4. Never allow children to slide the shoulder belt behind them or under their arm.
5. You should read the instructions provided with your child restraint to make sure that you are using it properly.
6. All occupants should always wear their lap and shoulder belts properly.

7. The driver and front passenger seats should be moved back as far as practical to allow the front air bags room to inflate.

8. Do not lean against the door or window. If your vehicle has side air bags, and deployment occurs, the side air bags will inflate forcefully into the space between occupants and the door and occupants could be injured.

9. If the air bag system in this vehicle needs to be modified to accommodate a disabled person, refer to the "Customer Assistance" section for customer service contact information.

WARNING!

- **Never place a rear-facing child restraint in front of an air bag. A deploying passenger front air bag can cause death or serious injury to a child 12 years or younger, including a child in a rear-facing child restraint.**
- **Never install a rear-facing child restraint in the front seat of a vehicle. Only use a rear-facing child restraint in the rear seat. If the vehicle does not have a rear seat, do not transport a rear-facing child restraint in that vehicle.**

Seat Belt Systems

Buckle up even though you are an excellent driver, even on short trips. Someone on the road may be a poor driver and could cause a collision that includes you. This can happen far away from home or on your own street.

Research has shown that seat belts save lives, and they can reduce the seriousness of injuries in a collision. Some of the worst injuries happen when people are thrown from the vehicle. Seat belts reduce the possibility of ejection and the risk of injury caused by striking the inside of the vehicle. Everyone in a motor vehicle should be belted at all times.

Enhanced Seat Belt Use Reminder System (BeltAlert)

Driver and Passenger BeltAlert (if equipped)

BeltAlert is a feature intended to remind the driver and outboard front seat passenger (if equipped with outboard front passenger seat BeltAlert) to buckle their seat belts. The Belt Alert feature is active whenever the ignition switch is in the START or ON/RUN position.

Initial Indication

If the driver is unbuckled when the ignition switch is first in the START or ON/RUN position, a chime will signal for a few seconds. If the driver or outboard front seat passenger (if equipped with outboard front passenger seat BeltAlert) is unbuckled when the ignition switch is first in the START or ON/RUN position the Seat Belt Reminder Light will turn on and remain on until both outboard front seat belts are buckled. The outboard front passenger seat BeltAlert is not active when an outboard front passenger seat is unoccupied.

BeltAlert Warning Sequence

The BeltAlert warning sequence is activated when the vehicle is moving above a specified vehicle speed range and the driver or outboard front seat passenger is unbuckled (if equipped with outboard front passenger seat BeltAlert) (the outboard front passenger seat BeltAlert is not active when the outboard front passenger seat is unoccupied). The BeltAlert warning sequence starts by blinking the Seat Belt Reminder Light and sounding an intermittent chime. Once the BeltAlert warning sequence has completed, the Seat Belt Reminder Light will remain on until the seat belts are buckled. The BeltAlert warning sequence may repeat based on vehicle speed until the driver and occupied outboard front seat passenger seat belts are buckled. The driver should instruct all occupants to buckle their seat belts.

Change of Status

If the driver or outboard front seat passenger (if equipped with outboard front passenger seat BeltAlert) unbuckles their seat belt while the vehicle is traveling, the BeltAlert warning sequence will begin until the seat belts are buckled again.

The outboard front passenger seat BeltAlert is not active when the outboard front passenger seat is unoccupied. BeltAlert may be triggered when an animal or other items are placed on the outboard front passenger seat or when the seat is folded flat (if equipped). It is recommended that pets be restrained in the rear seat (if equipped) in pet harnesses or pet carriers that are secured by seat belts, and cargo is properly stowed.

BeltAlert can be activated or deactivated by an authorized dealer. FCA US LLC does not recommend deactivating BeltAlert.

NOTE:
If BeltAlert has been deactivated and the driver or outboard front seat passenger (if equipped with outboard front passenger seat BeltAlert) is unbuckled the Seat Belt Reminder Light will turn on and remain on until the driver and outboard front seat passenger seat belts are buckled.

Lap/Shoulder Belts

All seating positions in your vehicle are equipped with lap/shoulder belts.

The seat belt webbing retractor will lock only during very sudden stops or collisions. This feature allows the shoulder part of the seat belt to move freely with you under normal conditions. However, in a collision the seat belt will lock and reduce your risk of striking the inside of the vehicle or being thrown out of the vehicle.

WARNING!

- **Relying on the air bags alone could lead to more severe injuries in a collision. The air bags work with your seat belt to restrain you properly. In some collisions, the air bags won't deploy at all. Always wear your seat belt even though you have air bags.**

(Continued)

WARNING! ***(Continued)***

- **In a collision, you and your passengers can suffer much greater injuries if you are not properly buckled up. You can strike the interior of your vehicle or other passengers, or you can be thrown out of the vehicle. Always be sure you and others in your vehicle are buckled up properly.**
- **It is dangerous to ride in a cargo area, inside or outside of a vehicle. In a collision, people riding in these areas are more likely to be seriously injured or killed.**
- **Do not allow people to ride in any area of your vehicle that is not equipped with seats and seat belts.**
- **Be sure everyone in your vehicle is in a seat and using a seat belt properly. Occupants, including the driver, should always wear their seat belts whether or not an air bag is also provided at their seating position to minimize the risk of severe injury or death in the event of a crash.**
- **Wearing your seat belt incorrectly could make your injuries in a collision much worse. You might suffer internal injuries, or you could even slide out of the seat belt. Follow these instructions to wear your seat belt safely and to keep your passengers safe, too.**

(Continued)

WARNING! *(Continued)*

- **Two people should never be belted into a single seat belt. People belted together can crash into one another in a collision, hurting one another badly. Never use a lap/shoulder belt or a lap belt for more than one person, no matter what their size.**

WARNING!

- **A lap belt worn too high can increase the risk of injury in a collision. The seat belt forces won't be at the strong hip and pelvic bones, but across your abdomen. Always wear the lap part of your seat belt as low as possible and keep it snug.**
- **A twisted seat belt may not protect you properly. In a collision, it could even cut into you. Be sure the seat belt is flat against your body, without twists. If you can't straighten a seat belt in your vehicle, take it to an authorized dealer immediately and have it fixed.**
- **A seat belt that is buckled into the wrong buckle will not protect you properly. The lap portion could ride too high on your body, possibly causing internal injuries. Always buckle your seat belt into the buckle nearest you.**

(Continued)

WARNING! *(Continued)*

- **A seat belt that is too loose will not protect you properly. In a sudden stop, you could move too far forward, increasing the possibility of injury. Wear your seat belt snugly.**
- **A seat belt that is worn under your arm is dangerous. Your body could strike the inside surfaces of the vehicle in a collision, increasing head and neck injury. A seat belt worn under the arm can cause internal injuries. Ribs aren't as strong as shoulder bones. Wear the seat belt over your shoulder so that your strongest bones will take the force in a collision.**
- **A shoulder belt placed behind you will not protect you from injury during a collision. You are more likely to hit your head in a collision if you do not wear your shoulder belt. The lap and shoulder belt are meant to be used together.**
- **A frayed or torn seat belt could rip apart in a collision and leave you with no protection. Inspect the seat belt system periodically, checking for cuts, frays, or loose parts. Damaged parts must be replaced immediately. Do not disassemble or modify the seat belt system. Seat belt assemblies must be replaced after a collision.**

Lap/Shoulder Belt Operating Instructions

1. Enter the vehicle and close the door. Sit back and adjust the seat.

2. The seat belt latch plate is above the back of the front seat, and next to your arm in the rear seat (for vehicles equipped with a rear seat). Grasp the latch plate and pull out the seat belt. Slide the latch plate up the webbing as far as necessary to allow the seat belt to go around your lap.

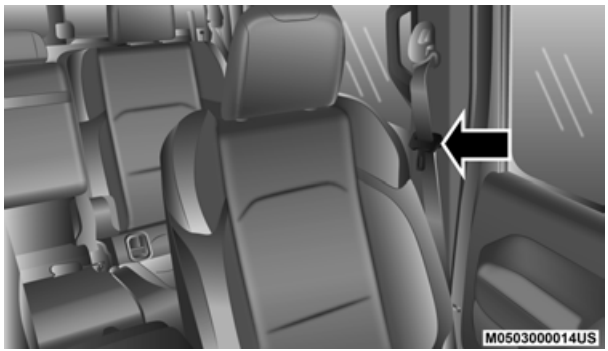

Pulling Out The Latch Plate

3. When the seat belt is long enough to fit, insert the latch plate into the buckle until you hear a “click.”

Inserting Latch Plate Into Buckle

4. Position the lap belt so that it is snug and lies low across your hips, below your abdomen. To remove slack in the lap belt portion, pull up on the shoulder belt. To loosen the lap belt if it is too tight, tilt the latch plate and pull on the lap belt. A snug seat belt reduces the risk of sliding under the seat belt in a collision.

Positioning The Lap Belt

5. Position the shoulder belt across the shoulder and chest with minimal, if any slack so that it is comfortable and not resting on your neck. The retractor will withdraw any slack in the shoulder belt.
6. To release the seat belt, push the red button on the buckle. The seat belt will automatically retract to its stowed position. If necessary, slide the latch plate down the webbing to allow the seat belt to retract fully.

Lap/Shoulder Belt Untwisting Procedure

Use the following procedure to untwist a twisted lap/shoulder belt.

1. Position the latch plate as close as possible to the anchor point.
2. At about 6 to 12 inches (15 to 30 cm) above the latch plate, grasp and twist the seat belt webbing 180 degrees to create a fold that begins immediately above the latch plate.
3. Slide the latch plate upward over the folded webbing. The folded webbing must enter the slot at the top of the latch plate.
4. Continue to slide the latch plate up until it clears the folded webbing and the seat belt is no longer twisted.

Adjustable Upper Shoulder Belt Anchorage

In the driver and outboard front passenger seats, the top of the shoulder belt can be adjusted upward or downward to position the seat belt away from your neck. Push or squeeze the anchorage button to release the anchorage, and move it up or down to the position that serves you best.

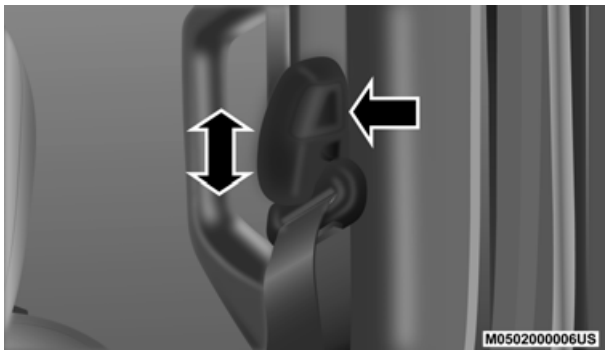

Adjustable Upper Anchorage

As a guide, if you are shorter than average, you will prefer the shoulder belt anchorage in a lower position, and if you are taller than average, you will prefer the shoulder belt anchorage in a higher position. After you release the anchorage button, try to move it up or down to make sure that it is locked in position.

NOTE:
The adjustable upper shoulder belt anchorage is equipped with an Easy Up feature. This feature allows the shoulder belt anchorage to be adjusted in the upward position without pushing or squeezing the release button. To verify the shoulder belt anchorage is latched, pull downward on the shoulder belt anchorage until it is locked into position.

WARNING!

- **Wearing your seat belt incorrectly could make your injuries in a collision much worse. You might suffer internal injuries, or you could even slide out of the seat belt. Follow these instructions to wear your seat belt safely and to keep your passengers safe, too.**
- **Position the shoulder belt across the shoulder and chest with minimal, if any slack so that it is comfortable and not resting on your neck. The retractor will withdraw any slack in the shoulder belt.**
- **Misadjustment of the seat belt could reduce the effectiveness of the safety belt in a crash.**
- **Always make all seat belt height adjustments when the vehicle is stationary.**

Seat Belt Extender

If a seat belt is not long enough to fit properly, even when the webbing is fully extended and the adjustable upper shoulder belt anchorage (if equipped) is in its lowest position, an authorized dealer can provide you with a Seat Belt Extender. The Seat Belt Extender should be used only if the existing seat belt is not long enough. When the Seat Belt Extender is not required for a different occupant, it must be removed.

WARNING!

- **ONLY use a Seat Belt Extender if it is physically required in order to properly fit the original seat belt system. DO NOT USE the Seat Belt Extender if, when worn, the distance between the front edge of the Seat Belt Extender buckle and the center of the occupant's body is LESS than 6 inches.**
- **Using a Seat Belt Extender when not needed can increase the risk of serious injury or death in a collision. Only use the Seat Belt Extender when the lap belt is not long enough and only use in the recommended seating positions. Remove and store the Seat Belt Extender when not needed.**

Seat Belts And Pregnant Women

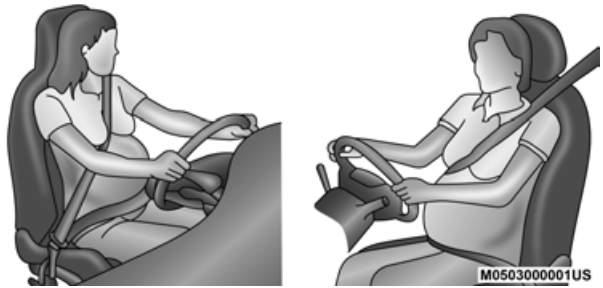

Pregnant Women And Seat Belts

Seat belts must be worn by all occupants including pregnant women: the risk of injury in the event of an accident is reduced for the mother and the unborn child if they are wearing a seat belt.

Position the lap belt snug and low below the abdomen and across the strong bones of the hips. Place the shoulder belt across the chest and away from the neck. Never place the shoulder belt behind the back or under the arm.

Seat Belt Pretensioner

The front outboard seat belt system is equipped with pretensioning devices that are designed to remove slack from the seat belt in the event of a collision. These devices may improve the performance of the seat belt by removing slack from the seat belt early in a collision. Pretensioners work for all size occupants, including those in child restraints.

NOTE:
These devices are not a substitute for proper seat belt placement by the occupant. The seat belt still must be worn snugly and positioned properly.

The pretensioners are triggered by the Occupant Restraint Controller (ORC). Like the air bags, the pretensioners are single use items. A deployed pretensioner or a deployed air bag must be replaced immediately.

Energy Management Feature

The front outboard seat belt system is equipped with an Energy Management feature that may help further reduce the risk of injury in the event of a collision. The seat belt system has a retractor assembly that is designed to release webbing in a controlled manner.

Switchable Automatic Locking Retractor (ALR)

The seat belts in the passenger seating positions are equipped with a Switchable Automatic Locking Retractor (ALR) which is used to secure a child restraint system. For additional information, refer to “Installing Child Restraints Using The Vehicle Seat Belt” under the “Child Restraints” section of this manual. The figure below illustrates the locking feature for each seating position.

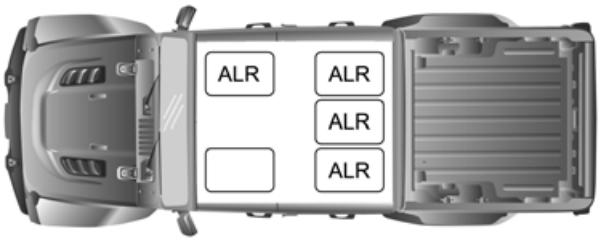

ALR — Switchable Automatic Locking Retractor

If the passenger seating position is equipped with an ALR and is being used for normal usage, only pull the seat belt webbing out far enough to comfortably wrap around the

occupant's mid-section so as to not activate the ALR. If the ALR is activated, you will hear a clicking sound as the seat belt retracts. Allow the webbing to retract completely in this case and then carefully pull out only the amount of webbing necessary to comfortably wrap around the occupant's mid-section. Slide the latch plate into the buckle until you hear a "click."

In Automatic Locking Mode, the shoulder belt is automatically pre-locked. The seat belt will still retract to remove any slack in the shoulder belt. Use the Automatic Locking Mode anytime a child restraint is installed in a seating position that has a seat belt with this feature. Children 12 years old and under should always be properly restrained in the rear seat of a vehicle with a rear seat.

WARNING!

- **Never place a rear-facing child restraint in front of an air bag. A deploying passenger front air bag can cause death or serious injury to a child 12 years or younger, including a child in a rear-facing child restraint.**

(Continued)

WARNING! *(Continued)*

- **Never install a rear-facing child restraint in the front seat of a vehicle. Only use a rear-facing child restraint in the rear seat. If the vehicle does not have a rear seat, do not transport a rear-facing child restraint in that vehicle.**

How To Engage The Automatic Locking Mode

1. Buckle the combination lap and shoulder belt.
2. Grasp the shoulder portion and pull downward until the entire seat belt is extracted.
3. Allow the seat belt to retract. As the seat belt retracts, you will hear a clicking sound. This indicates the seat belt is now in the Automatic Locking Mode.

How To Disengage The Automatic Locking Mode

Unbuckle the combination lap/shoulder belt and allow it to retract completely to disengage the Automatic Locking Mode and activate the vehicle sensitive (emergency) locking mode.

WARNING!

- **The seat belt assembly must be replaced if the switchable Automatic Locking Retractor (ALR) feature or any other seat belt function is not working properly when checked according to the procedures in the Service Manual.**
- **Failure to replace the seat belt assembly could increase the risk of injury in collisions.**
- **Do not use the Automatic Locking Mode to restrain occupants who are wearing the seat belt or children who are using booster seats. The locked mode is only used to install rear-facing or forward-facing child restraints that have a harness for restraining the child.**

Stow Clips Behind Rear Seat

Your vehicle is equipped with a stow clip on the lower trim next to each of the rear seats. This clip is used to hold the seat belt out of the path of the seatback when it is being folded and opened. Only place the seat belt webbing in this clip while folding and opening the seat. Do not leave the webbing behind the clip when using the belt to restrain an occupant.

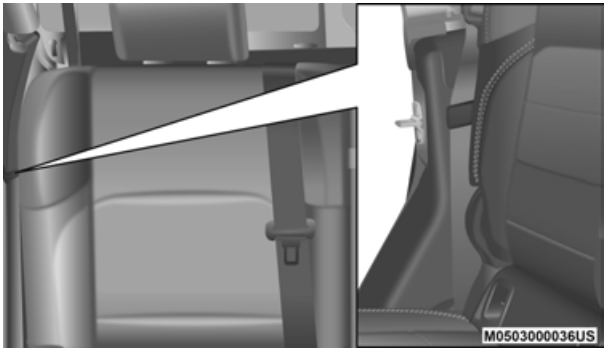

Rear Stow Clip

WARNING!

Do not place the seat belt webbing behind the rear seat stow clip when using the seat belt to restrain an occupant. The seat belt will not be positioned properly on the occupant and they could be more seriously injured in an accident as a result.

Supplemental Restraint Systems (SRS)

Some of the safety features described in this section may be standard equipment on some models, or may be optional equipment on others. If you are not sure, ask an authorized dealer.

The air bag system must be ready to protect you in a collision. The Occupant Restraint Controller (ORC) monitors the internal circuits and interconnecting wiring associated with the electrical Air Bag System Components. Your vehicle may be equipped with the following Air Bag System Components:

Air Bag System Components

- Occupant Restraint Controller (ORC)
- Air Bag Warning Light
- Steering Wheel and Column
- Instrument Panel
- Knee Impact Bolsters
- Driver and Front Passenger Air Bags
- Seat Belt Buckle Switch
- Supplemental Side Air Bags
- Front and Side Impact Sensors
- Seat Belt Pretensioners
- Seat Track Position Sensors
- Occupant Classification System

Air Bag Warning Light

The ORC monitors the readiness of the electronic parts of the air bag system whenever the ignition switch is in the START or ON/RUN position. If the ignition switch is in the OFF position or in the ACC position, the air bag system is not on and the air bags will not inflate.

The ORC contains a backup power supply system that may deploy the air bag system even if the battery loses power or it becomes disconnected prior to deployment.

The ORC turns on the Air Bag Warning Light in the instrument panel for approximately four to eight seconds for a self-check when the ignition switch is first in the ON/RUN position. After the self-check, the Air Bag Warning Light will turn off. If the ORC detects a malfunction in any part of the system, it turns on the Air Bag Warning Light, either momentarily or continuously. A single chime will sound to alert you if the light comes on again after initial startup.

The ORC also includes diagnostics that will illuminate the instrument panel Air Bag Warning Light if a malfunction is detected that could affect the air bag system. The diagnostics also record the nature of the malfunction. While the air bag system is designed to be maintenance free, if any of the following occurs, have an authorized dealer service the air bag system immediately.

- The Air Bag Warning Light does not come on during the four to eight seconds when the ignition switch is first in the ON/RUN position.
- The Air Bag Warning Light remains on after the four to eight-second interval.
- The Air Bag Warning Light comes on intermittently or remains on while driving.

NOTE:
If the speedometer, tachometer, or any engine related gauges are not working, the Occupant Restraint Controller (ORC) may also be disabled. In this condition the air bags may not be ready to inflate for your protection. Have an authorized dealer service the air bag system immediately.

WARNING!
Ignoring the Air Bag Warning Light in your instrument panel could mean you won't have the air bag system to protect you in a collision. If the light does not come on as a bulb check when the ignition is first turned on, stays on after you start the vehicle, or if it comes on as you drive, have an authorized dealer service the air bag system immediately.

Redundant Air Bag Warning Light

If a fault with the Air Bag Warning Light is detected, which could affect the Supplemental Restraint System (SRS), the Redundant Air Bag Warning Light will illuminate on the instrument panel. The Redundant Air Bag Warning Light will stay on until the fault is cleared. In addition, a single chime will sound to alert you that the Redundant Air Bag Warning Light has come on and a fault has been detected. If the Redundant Air Bag Warning Light comes on intermittently or remains on while driving have an authorized dealer service the vehicle immediately.

For additional information regarding the Redundant Air Bag Warning Light refer to "Getting To Know Your Instrument Panel" section of this manual.

Front Air Bags

This vehicle has front air bags and lap/shoulder belts for both the driver and front passenger. The front air bags are a supplement to the seat belt restraint systems. The driver front air bag is mounted in the center of the steering wheel. The passenger front air bag is mounted in the instrument panel, above the glove compartment. The words "SRS AIRBAG" or "AIRBAG" are embossed on the air bag covers.

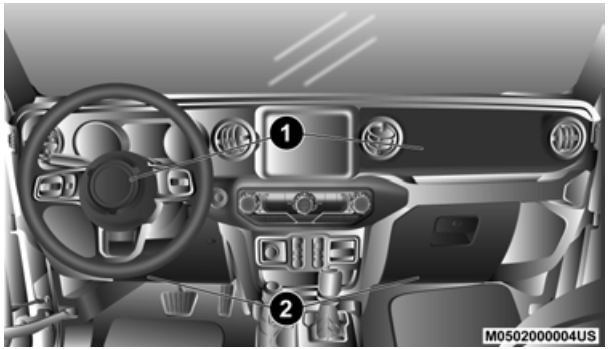

Front Air Bag/Knee Impact Bolster Locations

1 — Driver And Passenger Front Air Bags
2 — Driver And Passenger Knee Impact Bolsters

WARNING!

- **Being too close to the steering wheel or instrument panel during front air bag deployment could cause serious injury, including death. Air bags need room to inflate. Sit back, comfortably extending your arms to reach the steering wheel or instrument panel.**
- **Never place a rear-facing child restraint in front of an air bag. A deploying passenger front air bag can cause death or serious injury to a child 12 years or younger, including a child in a rear-facing child restraint.**
- **Never install a rear-facing child restraint in the front seat of a vehicle. Only use a rear-facing child restraint in the rear seat. If the vehicle does not have a rear seat, do not transport a rear-facing child restraint in that vehicle.**

Driver And Passenger Front Air Bag Features

The Advanced Front Air Bag system has multistage driver and front passenger air bags. This system provides output appropriate to the severity and type of collision as determined by the Occupant Restraint Controller (ORC), which may receive information from the front impact sensors (if equipped) or other system components.

The first stage inflator is triggered immediately during an impact that requires air bag deployment. A low energy output is used in less severe collisions. A higher energy output is used for more severe collisions.

This vehicle may be equipped with a driver and/or front passenger seat belt buckle switch that detects whether the driver or front passenger seat belt is buckled. The seat belt buckle switch may adjust the inflation rate of the Advanced Front Air Bags.

This vehicle may be equipped with driver and/or front passenger seat track position sensors that may adjust the inflation rate of the Advanced Front Air Bags based upon seat position.

This vehicle has an Occupant Classification System ("OCS") in the front passenger seat. The OCS is designed to activate or deactivate the Passenger Advanced Front Air Bag depending on the occupant's seated weight. It is designed to deactivate the Passenger Advanced Front Air Bag for an unoccupied seat and for occupants whose seated weight classifies them in a category other than a properly seated adult. This could be a child, teenager, or even an adult.

The Passenger Air Bag Disable ("PAD") Indicator Light (an amber light located on the overhead sports bar) tells the driver and front passenger when the Passenger Advanced Front Air Bag is deactivated. The PAD Indicator Light illuminates the words "PASSENGER AIR BAG OFF" to show that the Passenger Advanced Front Air Bag will not deploy during a collision.

NOTE:
When the front passenger seat is empty or when very light objects are placed on the seat, the Passenger Advanced Front Air Bag will not deploy even though the Passenger Air Bag Disable (PAD) System Indicator Light is NOT illuminated.

WARNING!

- **No objects should be placed over or near the air bag on the instrument panel or steering wheel because any such objects could cause harm if the vehicle is in a collision severe enough to cause the air bag to inflate.**
- **Do not put anything on or around the air bag covers or attempt to open them manually. You may damage the air bags and you could be injured because the air bags may no longer be functional. The protective covers for the air bag cushions are designed to open only when the air bags are inflating.**

(Continued)

WARNING! *(Continued)*

- **Relying on the air bags alone could lead to more severe injuries in a collision. The air bags work with your seat belt to restrain you properly. In some collisions, air bags won't deploy at all. Always wear your seat belts even though you have air bags.**

Front Air Bag Operation

Front Air Bags are designed to provide additional protection by supplementing the seat belts. Front air bags are not expected to reduce the risk of injury in rear, side, or rollover collisions. The front air bags will not deploy in all frontal collisions, including some that may produce substantial vehicle damage — for example, some pole collisions, truck underrides, and angle offset collisions.

On the other hand, depending on the type and location of impact, front air bags may deploy in crashes with little vehicle front-end damage but that produce a severe initial deceleration.

Because air bag sensors measure vehicle deceleration over time, vehicle speed and damage by themselves are not good indicators of whether or not an air bag should have deployed.

Seat belts are necessary for your protection in all collisions, and also are needed to help keep you in position, away from an inflating air bag.

When the ORC detects a collision requiring the front air bags, it signals the inflator units. A large quantity of non-toxic gas is generated to inflate the front air bags.

The steering wheel hub trim cover and the upper passenger side of the instrument panel separate and fold out of the way as the air bags inflate to their full size. The front air bags fully inflate in less time than it takes to blink your eyes. The front air bags then quickly deflate while helping to restrain the driver and front passenger.

Occupant Classification System (OCS) — Front Passenger Seat

The OCS is part of a Federally regulated safety system for this vehicle. It is designed to activate or deactivate the Passenger Advanced Front Air Bag depending on the occupant's seated weight. It is designed to deactivate the Passenger Advanced Front Air Bag for an unoccupied seat and for occupants whose seated weight classifies them in a category other than a properly seated adult. This could be a child, teenager, or even an adult.

The Occupant Classification System (OCS) Consists Of The Following:

- Occupant Restraint Controller (ORC)
- Occupant Classification Module (OCM) and Sensor located in the front passenger seat
- Passenger Air Bag Disabled (PAD) Indicator Light – an amber light located on the overhead sports bar
- Air Bag Warning Light
- Passenger Seat Belt

Occupant Classification Module (OCM) And Sensor

The Occupant Classification Module (OCM) is located underneath the front passenger seat. The Sensor is located beneath the passenger seat cushion foam. Any weight on the seat will be sensed by the Sensor. The OCM uses input from the Sensor to determine the front passenger's most probable classification. The OCM communicates this information to the ORC. The ORC uses the classification to determine whether it should activate or deactivate the Passenger Advanced Front Air Bag. In order for the OCS to operate as designed, it is important for the front passenger to be seated properly and properly wearing the seat belt. Properly seated passengers are:

- Sitting upright.
- Facing forward.
- Sitting in the center of the seat with their feet comfortably on or near the floor.
- Sitting with their back against the seat back and the seat back in an upright position.

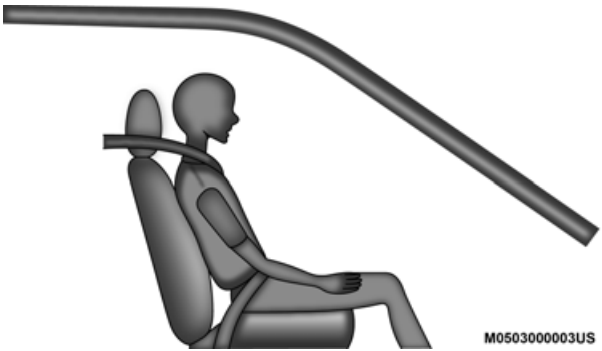

Seated Properly

The OCS may deactivate the deployment of the Passenger Advanced Front Air Bag if the OCS estimates that:

- The front passenger seat is unoccupied or has very light objects in it.
- The front passenger seat is occupied by a rear-facing child restraint.
- The front passenger seat is occupied by a child, including a child seated in a forward-facing child restraint or booster seat.
- The front passenger seat is occupied by a small passenger, including a child or small adult.
- The front passenger is not properly seated or his or her weight is taken off of the seat for a period of time.

Passenger Air Bag Disable (PAD) System		
Front Passenger Seat Occupant Status	**Front Passenger Advanced Air Bag Disabled Indicator Light ("PAD") Status**	**Front Passenger Air Bag Status**
Unoccupied seat* Unbuckled	NOT ILLUMINATED	DEACTIVATED
Unoccupied seat*Buckled	"PASSENGER AIR BAG OFF"	DEACTIVATED
Grocery bags, heavy briefcases, and other relatively light objects	"PASSENGER AIR BAG OFF"	DEACTIVATED
Rear-facing child restraint**	"PASSENGER AIR BAG OFF"	DEACTIVATED
Child, including a child in a forward-facing child restraint or booster seat**	"PASSENGER AIR BAG OFF"	DEACTIVATED

Passenger Air Bag Disable (PAD) System		
Front Passenger Seat Occupant Status	**Front Passenger Advanced Air Bag Disabled Indicator Light ("PAD") Status**	**Front Passenger Air Bag Status**
Small adult	"PASSENGER AIR BAG OFF"	DEACTIVATED
Properly seated adult	NOT ILLUMINATED	ACTIVATED

* When the front passenger seat is empty or when very light objects are placed on the seat and the seat belt is unbuckled, the Passenger Advanced Front Air Bag will not deploy even though the PAD System Indicator Light is NOT illuminated.

** It is possible for a child to be classified as an adult, allowing the deployment of the Passenger Advanced Front Air Bag. Never allow children to ride in the front passenger seat and never install a child restraint system, including a rear-facing child restraint, in the front passenger seat.

WARNING!

- **Never place a rear-facing child restraint in front of an air bag. A deploying passenger front air bag can cause death or serious injury to a child 12 years or younger, including a child in a rear-facing child restraint.**
- **Never install a rear-facing child restraint in the front seat of a vehicle. Only use a rear-facing child restraint in the rear seat. If the vehicle does not have a rear seat, do not transport a rear-facing child restraint in that vehicle.**

Passenger Advanced Front Air Bag Disabled (PAD) Indicator Light

The Passenger Advanced Front Air Bag Disabled (PAD) Indicator Light (an amber light located on the overhead sports bar) tells the driver and front passenger when the Passenger Advanced Front Air Bag is deactivated. The PAD Indicator light illuminates the words "PASSENGER AIR BAG OFF" to show that the Passenger Advanced Front Air Bag will not deploy during a collision. When the front passenger seat is empty or when very light objects are placed on the seat and the seat belt is unbuckled, the Passenger Advanced Front Air Bag will not deploy even though the PAD indicator light is NOT illuminated.

The PAD indicator light should not be illuminated when an adult passenger is properly seated in the front passenger seat. The driver and adult passenger should verify that the PAD Indicator Light is not illuminated when an adult is riding in the front passenger seat. If an adult is not seated properly, the Passenger Advanced Front Air Bag may deactivate and the PAD Indicator Light will be illuminated.

The PAD Indicator Light should be illuminated and the Passenger Advanced Front Air Bag should be deactivated for most properly seated and restrained children in the passenger seat and for most properly installed child restraint systems. However, under certain conditions, even with a properly installed child restraint system, the PAD Indicator Light may not be illuminated, even though the Passenger Advanced Front Air Bag is deactivated. This can occur if the child restraint is lighter than the lightest weight necessary to illuminate the PAD Indicator Light. **NEVER** assume the Passenger Advanced Front Air Bag is deactivated unless the PAD Indicator Light is illuminated with the words "PASSENGER AIR BAG OFF."

NOTE:
If the seat belt is buckled for an empty seat, the PAD Indicator Light will illuminate.

If The PAD Indicator Light Is Illuminated For An Adult Passenger:

If an adult passenger is seated in the front passenger seat and the PAD Indicator Light is illuminated, the passenger may be sitting improperly. Follow the steps below to allow the OCS to detect the adult passenger's seated weight to activate the Passenger Advanced Front Air Bag:

1. Turn off the vehicle and have the adult passenger step out of the vehicle.
2. Remove any extra materials from the passenger seat, such as cushions, pads, seat covers, seat massagers, blankets, extra clothing, etc.
3. Place the seatback in the full upright position.
4. Have the adult passenger sit in the center of the seat, with the passenger's feet comfortably on or near the floor, and with their back against the seatback.
5. Restart the vehicle and have the passenger remain in this seated position for two to three minutes after restarting the vehicle.

WARNING!

- **If the PAD Indicator Light remains illuminated for an adult passenger, have an authorized dealer service the air bag system immediately. Failure to do so may cause serious injury or death. If the PAD Indicator Light is illuminated with the words "PASSENGER AIR BAG OFF," the Passenger Advanced Front Air Bag will not deploy in the event of a collision.**
- **Never place a rear-facing child restraint in front of an air bag. A deploying passenger front air bag can cause death or serious injury to a child 12 years or younger, including a child in a rear-facing child restraint.**
- **Never install a rear-facing child restraint in the front seat of a vehicle. Only use a rear-facing child restraint in the rear seat. If the vehicle does not have a rear seat, do not transport a rear-facing child restraint in that vehicle.**
- **Children 12 years or younger should always ride buckled up in the rear seat of a vehicle with a rear seat.**

Lighter Weight Passengers (Including Small Adults)

When a lighter weight passenger, including a small adult, occupies the passenger seat, the Passenger Advanced Front Air Bag may be deactivated. Therefore, the Passenger Advanced Front Air Bag may or may not be activated for a lighter weight passenger, including a small adult (depending on size) who is seated in the passenger seat. This does not mean that the OCS is working improperly.

The driver and passenger must always use the PAD Indicator Light as a determination of whether the Passenger Advanced Front Air Bag is activated or deactivated. If the PAD Indicator Light is illuminated with the words “PASSENGER AIR BAG OFF” when an adult is in the front passenger seat, have the passenger reposition his or her body in the seat until the PAD Indicator Light goes out.

If the PAD Indicator Light is illuminated with the words “PASSENGER AIR BAG OFF” the Passenger Advanced Front Air Bag will not inflate in the event of a collision.

Do Not Decrease OR Increase The Front Passenger’s Seated Weight On The Front Passenger Seat

The front passenger’s seated weight must be properly positioned on the front passenger seat. Failure to do so may result in serious injury or death. The OCS determines the most probable classification of the occupant that it detects. The OCS will detect the front passenger’s decreased or increased seated weight, which may result in deactivation or

activation of the Passenger Advanced Front Air Bag in a collision. This does not mean that the OCS is working improperly. Decreasing the front passenger's seated weight on the front passenger seat may result in deactivation of the Passenger Advanced Front Air Bag causing serious injury or death. Increasing the front passenger's seated weight on the front passenger seat may result in activation of the Passenger Advanced Front Air Bag. Examples of improper front passenger seating include:

- The front passenger's weight is transferred to another part of the vehicle (like the door, arm rest or instrument panel).
- The front passenger leans forward, sideways, or turns to face the rear of the vehicle.
- The front passenger's seatback is not in the full upright position.
- The front passenger carries or holds an object while seated (e.g., backpack, box, etc.).
- Objects are lodged under the front passenger seat.
- Objects are lodged between the front passenger seat and center console.
- Accessories that may change the seated weight on the front passenger seat are attached to the front passenger seat.
- Anything that may decrease or increase the front passenger's seated weight.

The OCS determines the front passenger's most probable classification. If an occupant in the front passenger seat is seated improperly, the occupant may provide an output signal to the OCS that is different from the occupant's properly seated weight input, for example:

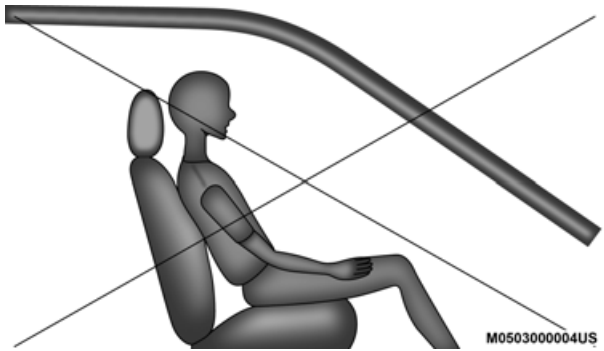

Not Seated Properly

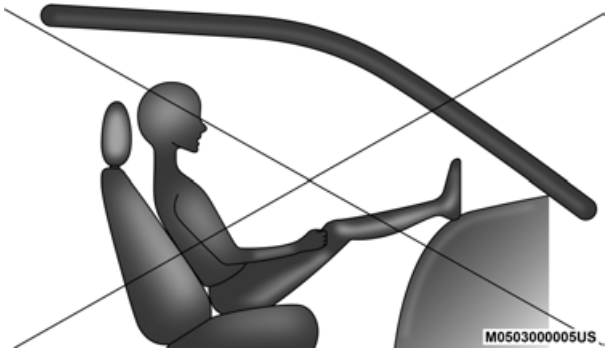

Not Seated Properly

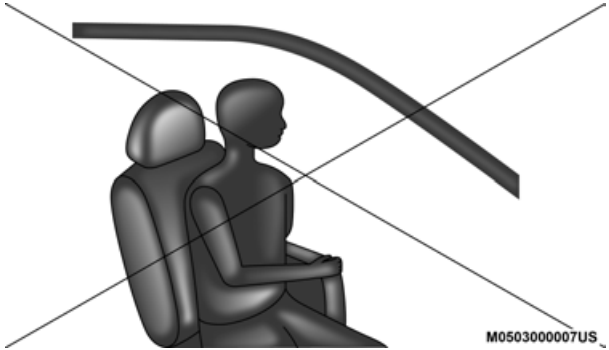

Not Seated Properly

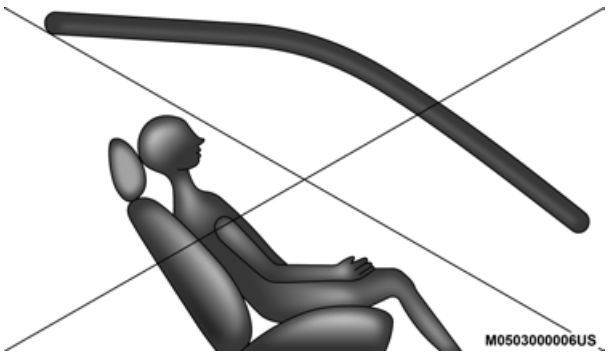

Not Seated Properly

WARNING!

- **If a child restraint system, child, small teenager or adult in the front passenger seat is seated improperly, the occupant may provide an output signal to the OCS that is different from the occupant's properly seated weight input. This may result in serious injury or death in a collision.**

(Continued)

WARNING! *(Continued)*

- **Always wear your seat belt and sit properly, with the seatback in an upright position, your back against the seatback, sitting upright, facing forward, in the center of the seat, with your feet comfortably on or near the floor.**
- **Do not carry or hold any objects (e.g., backpacks, boxes, etc.) while seated in the front passenger seat. Holding an object may provide an output signal to the OCS that is different than the occupant's properly seated weight input, which may result in serious injury or death in a collision.**

The Air Bag Warning Light will illuminate whenever the OCS is unable to classify the front passenger seat status.

A malfunction in the OCS may affect the operation of the air bag system. If the Air Bag Warning Light does not come on, or stays on after you start the vehicle, or it comes on as you drive, take the vehicle to an authorized dealer for service immediately.

WARNING!

- **Ignoring the Air Bag Warning Light in your instrument panel could mean you won't have the air bags to protect you in a collision. If the light does not come on as a bulb check when the ignition is first turned on, stays on after you start the vehicle, or if it comes on as you drive, have an authorized dealer service the air bag system immediately.**
- **Placing an object on the floor under the front passenger seat may prevent the OCS from working properly, which may result in serious injury or death in a collision. Do not place any objects on the floor under the front passenger seat.**
- **If there is a fault present in the OCS, both the PAD Indicator Light and the Air Bag Warning Light will illuminate to show that the Passenger Advanced Front Air Bag is deactivated. Should this occur, the Passenger Advanced Front Air Bag will remain deactivated until the fault is cleared. This indicates that you should take the vehicle to an authorized dealer for service immediately.**

The passenger seat assembly contains critical OCS components that may affect Passenger Advanced Front Air Bag inflation. In order for the OCS to properly classify the seated weight of a front seat passenger, the OCS components must function as designed. Do not make any modifications to the front passenger seat components, assembly, or to the seat cover. If the seat, trim cover, or cushion needs service for any reason, take the vehicle to an authorized dealer. Only FCA US LLC approved seat accessories may be used.

The following requirements must be strictly followed:

- Do not modify the front passenger seat assembly or components in any way.
- Do not use prior or future model year seat covers or cushions not designated by FCA US LLC for the specific model being repaired. Always use the correct seat cover and cushion specified for the vehicle.
- Do not replace the seat cover or cushion with an aftermarket seat cover or cushion.
- Do not add a secondary seat cover or mat.
- At no time should any Supplemental Restraint System (SRS) component or SRS related component or fastener be modified or replaced with any part except those which are approved by FCA US LLC.

WARNING!

- **Unapproved modifications or service procedures to the passenger seat assembly, its related components, seat cover, or cushion may inadvertently change the air bag deployment in case of a frontal collision. This could result in death or serious injury to the front passenger if the vehicle is involved in a collision. A modified vehicle may not comply with required Federal Motor Vehicle Safety Standards (FMVSS) and/or Canadian Motor Vehicle Safety Standards (CMVSS).**
- **If it is necessary to modify the air bag system for persons with disabilities, contact an authorized dealer.**

Knee Impact Bolsters

The Knee Impact Bolsters help protect the knees of the driver and front passenger, and position the front occupants for improved interaction with the front air bags.

WARNING!

- **Do not drill, cut, or tamper with the knee impact bolsters in any way.**

(Continued)

WARNING! *(Continued)*

- **Do not mount any accessories to the knee impact bolsters such as alarm lights, stereos, citizen band radios, etc.**

Supplemental Side Air Bags

Supplemental Seat-Mounted Side Air Bags (SABs)

This vehicle is equipped with Supplemental Seat-Mounted Side Air Bags (SABs).

Supplemental Seat-Mounted Side Air Bags (SABs) are located in the outboard side of the front seats. The SABs are marked with a "SRS AIRBAG" or "AIRBAG" on a label or on the seat trim on the outboard side of the seats.

The SABs may help to reduce the risk of occupant injury during certain side impacts, in addition to the injury reduction potential provided by the seat belts and body structure.

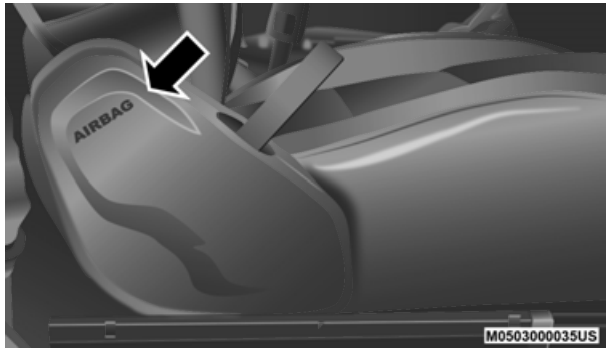

Supplemental Seat-Mounted Side Air Bag Label

When the SAB deploys, it opens the seam on the outboard side of the seatback's trim cover. The inflating SAB deploys through the seat seam into the space between the occupant and the door. The SAB moves at a very high speed and with such a high force that it could injure occupants if they are not seated properly, or if items are positioned in the area where the SAB inflates. Children are at an even greater risk of injury from a deploying air bag.

WARNING!

Do not use accessory seat covers or place objects between you and the Side Air Bags; the performance could be adversely affected and/or objects could be pushed into you, causing serious injury.

Side Impacts

The Side Air Bags are designed to activate in certain side impacts. The Occupant Restraint Controller (ORC) determines whether the deployment of the Side Air Bags in a particular impact event is appropriate, based on the severity and type of collision. The side impact sensors aid the ORC in determining the appropriate response to impact events. The system is calibrated to deploy the Side Air Bags on the impact side of the vehicle during impacts that require Side Air Bag occupant protection. In side impacts, the Side Air Bags deploy independently; a left side impact deploys the left Side Air Bags only and a right-side impact deploys the right Side Air Bags only. Vehicle damage by itself is not a good indicator of whether or not Side Air Bags should have deployed.

The Side Air Bags will not deploy in all side collisions, including some collisions at certain angles, or some side collisions that do not impact the area of the passenger compartment. The Side Air Bags may deploy during angled or offset frontal collisions where the front air bags deploy.

Side Air Bags are a supplement to the seat belt restraint system. Side Air Bags deploy in less time than it takes to blink your eyes.

WARNING!

- **Occupants, including children, who are up against or very close to Side Air Bags can be seriously injured or killed. Occupants, including children, should never lean on or sleep against the door, side windows, or area where the side air bags inflate, even if they are in an infant or child restraint.**
- **Seat belts (and child restraints where appropriate) are necessary for your protection in all collisions. They also help keep you in position, away from an inflating Side Air Bag. To get the best protection from the Side Air Bags, occupants must wear their seat belts properly and sit upright with their backs against the seats. Children must be properly restrained in a child restraint or booster seat that is appropriate for the size of the child.**

WARNING!

- **Side Air Bags need room to inflate. Do not lean against the door or window. Sit upright in the center of the seat.**
- **Being too close to the Side Air Bags during deployment could cause you to be severely injured or killed.**
- **Relying on the Side Air Bags alone could lead to more severe injuries in a collision. The Side Air Bags work with your seat belt to restrain you properly. In some collisions, Side Air Bags won't deploy at all. Always wear your seat belt even though you have Side Air Bags.**

NOTE:
Air bag covers may not be obvious in the interior trim, but they will open during air bag deployment.

Air Bag System Components

NOTE:
The Occupant Restraint Controller (ORC) monitors the internal circuits and interconnecting wiring associated with electrical Air Bag System Components listed below:

- Occupant Restraint Controller (ORC)
- Air Bag Warning Light
- Steering Wheel and Column
- Instrument Panel
- Knee Impact Bolsters
- Driver and Front Passenger Air Bags
- Seat Belt Buckle Switch
- Supplemental Side Air Bags
- Front and Side Impact Sensors
- Seat Belt Pretensioners
- Seat Track Position Sensors
- Occupant Classification System

If A Deployment Occurs

The front air bags are designed to deflate immediately after deployment.

NOTE:
Front and/or side air bags will not deploy in all collisions. This does not mean something is wrong with the air bag system.

If you do have a collision which deploys the air bags, any or all of the following may occur:

- The air bag material may sometimes cause abrasions and/or skin reddening to the occupants as the air bags deploy and unfold. The abrasions are similar to friction rope burns or those you might get sliding along a carpet or gymnasium floor. They are not caused by contact with chemicals. They are not permanent and normally heal quickly. However, if you haven't healed significantly within a few days, or if you have any blistering, see your doctor immediately.
- As the air bags deflate, you may see some smoke-like particles. The particles are a normal by-product of the process that generates the non-toxic gas used for air bag inflation. These airborne particles may irritate the skin, eyes, nose, or throat. If you have skin or eye irritation, rinse the area with cool water. For nose or throat irritation, move to fresh air. If the irritation continues, see your doctor. If these particles settle on your clothing, follow the garment manufacturer's instructions for cleaning.

Do not drive your vehicle after the air bags have deployed. If you are involved in another collision, the air bags will not be in place to protect you.

WARNING!

Deployed air bags and seat belt pretensioners cannot protect you in another collision. Have the air bags, seat belt pretensioners, and the seat belt retractor assemblies replaced by an authorized dealer immediately. Also, have the Occupant Restraint Controller System serviced as well.

NOTE:

- Air bag covers may not be obvious in the interior trim, but they will open during air bag deployment.
- After any collision, the vehicle should be taken to an authorized dealer immediately.

Enhanced Accident Response System

In the event of an impact, if the communication network remains intact, and the power remains intact, depending on the nature of the event, the ORC will determine whether to have the Enhanced Accident Response System perform the following functions:

- Cut off fuel to the engine (if equipped)
- Cut off battery power to the electric motor (if equipped)
- Flash hazard lights as long as the battery has power

- Turn on the interior lights, which remain on as long as the battery has power or for 15 minutes from the intervention of the Enhanced Accident Response System.
- Unlock the power door locks.

Your vehicle may also be designed to perform any of these other functions in response to the Enhanced Accident Response System:

- Turn off the Fuel Filter Heater, Turn off the HVAC Blower Motor, Close the HVAC Circulation Door
- Cut off battery power to the:
  - Engine
  - Electric Motor (if equipped)
  - Electric power steering
  - Brake booster
  - Electric park brake
  - Automatic transmission gear selector
  - Horn
  - Front wiper
  - Headlamp washer pump

NOTE:
After an accident, remember to cycle the ignition to the STOP (OFF/LOCK) position and remove the key from the ignition switch to avoid draining the battery. Carefully check the vehicle for fuel leaks in the engine compartment and on the ground near the engine compartment and fuel tank before resetting the system and starting the engine. If there are no fuel leaks or damage to the vehicle electrical devices (e.g. headlights) after an accident, reset the system by following the procedure described below. If you have any doubt, contact an authorized dealer.

Enhanced Accident Response System Reset Procedure

In order to reset the Enhanced Accident Response System functions after an event, the ignition switch must be changed from ignition START or ON/RUN to ignition OFF. Carefully check the vehicle for fuel leaks in the engine compartment and on the ground near the engine compartment and fuel tank before resetting the system and starting the engine.

Maintaining Your Air Bag System

WARNING!

- **Modifications to any part of the air bag system could cause it to fail when you need it. You could be injured if the air bag system is not there to protect you. Do not modify the components or wiring, including adding any kind of badges or stickers to the steering wheel hub trim cover or the upper passenger side of the instrument panel. Do not modify the front bumper, vehicle body structure, or add aftermarket side steps or running boards.**
- **It is dangerous to try to repair any part of the air bag system yourself. Be sure to tell anyone who works on your vehicle that it has an air bag system.**
- **Do not attempt to modify any part of your air bag system. The air bag may inflate accidentally or may not function properly if modifications are made. Take your vehicle to an authorized dealer for any air bag system service. If your seat, including your trim cover and cushion, needs to be serviced in any way (including removal or loosening/tightening of seat attachment bolts), take the vehicle to an authorized dealer. Only manufacturer approved seat accessories may be used. If it is necessary to modify the air bag system for persons with disabilities, contact an authorized dealer.**

Event Data Recorder (EDR)

This vehicle is equipped with an Event Data Recorder (EDR). The main purpose of an EDR is to record, in certain crash or near crash-like situations, such as an air bag deployment or hitting a road obstacle, data that will assist in understanding how a vehicle's systems performed. The EDR is designed to record data related to vehicle dynamics and safety systems for a short period of time, typically 30 seconds or less. The EDR in this vehicle is designed to record such data as:

- How various systems in your vehicle were operating;
- Whether or not the driver and passenger safety belts were buckled/fastened;
- How far (if at all) the driver was depressing the accelerator and/or brake pedal; and,
- How fast the vehicle was traveling.

These data can help provide a better understanding of the circumstances in which crashes and injuries occur.

NOTE:
EDR data are recorded by your vehicle only if a non-trivial crash situation occurs; no data are recorded by the EDR under normal driving conditions and no personal data (e.g., name, gender, age, and crash location) are recorded.

However, other parties, such as law enforcement, could combine the EDR data with the type of personally identifying data routinely acquired during a crash investigation.

To read data recorded by an EDR, special equipment is required, and access to the vehicle or the EDR is needed. In addition to the vehicle manufacturer, other parties, such as law enforcement, that have the special equipment, can read the information if they have access to the vehicle or the EDR.

Child Restraints

Everyone in your vehicle needs to be buckled up at all times, including babies and children. Every state in the United States, and every Canadian province, requires that small children ride in proper restraint systems. This is the law, and you can be prosecuted for ignoring it.

Children 12 years or younger should ride properly buckled up in a rear seat, if available. According to crash statistics, children are safer when properly restrained in the rear seats rather than in the front.

WARNING!
In a collision, an unrestrained child can become a projectile inside the vehicle. The force required to hold even an infant on your lap could become so great that you could not hold the child, no matter how strong you are. The child and others could be badly injured or killed. Any child riding in your vehicle should be in a proper restraint for the child's size.

There are different sizes and types of restraints for children from newborn size to the child almost large enough for an adult safety belt. Always check the child seat Owner's Manual to make sure you have the correct seat for your child. Carefully read and follow all the instructions and warnings in the child restraint Owner's Manual and on all the labels attached to the child restraint.

Before buying any restraint system, make sure that it has a label certifying that it meets all applicable Safety Standards. You should also make sure that you can install it in the vehicle where you will use it.

NOTE:

- For additional information, refer to http://www.nhtsa.gov/parents-and-caregivers or call: 1–888–327–4236
- Canadian residents should refer to Transport Canada's website for additional information: http://www.tc.gc.ca/eng/motorvehiclesafety/safed-rivers-childsafety-index-53.htm

Summary Of Recommendations For Restraining Children In Vehicles

	Child Size, Height, Weight Or Age	Recommended Type Of Child Restraint
Infants and Toddlers	Children who are two years old or younger and who have not reached the height or weight limits of their child restraint	Either an Infant Carrier or a Convertible Child Restraint, facing rearward in a rear seat of the vehicle
Small Children	Children who are at least two years old or who have outgrown the height or weight limit of their rear-facing child restraint	Forward-Facing Child Restraint with a five-point Harness, facing forward in a rear seat of the vehicle

	Child Size, Height, Weight Or Age	Recommended Type Of Child Restraint
Larger Children	Children who have outgrown their forward-facing child restraint, but are too small to properly fit the vehicle's seat belt	Belt Positioning Booster Seat and the vehicle seat belt, seated in a rear seat of the vehicle
Children Too Large for Child Restraints	Children 12 years old or younger, who have outgrown the height or weight limit of their booster seat	Vehicle Seat Belt, seated in a rear seat of the vehicle

Infant And Child Restraints

Safety experts recommend that children ride rear-facing in the vehicle until they are two years old or until they reach either the height or weight limit of their rear-facing child restraint. Two types of child restraints can be used rear-facing: infant carriers and convertible child seats.

The infant carrier is only used rear-facing in the vehicle. It is recommended for children from birth until they reach the weight or height limit of the infant carrier. Convertible child seats can be used either rear-facing or forward-facing in the vehicle. Convertible child seats often have a higher weight limit in the rear-facing direction than infant carriers do, so they can be used rear-facing by children who have outgrown their infant carrier but are still less than at least two years old. Children should remain rear-facing until they reach the highest weight or height allowed by their convertible child seat.

WARNING!

- **Never place a rear-facing child restraint in front of an air bag. A deploying passenger front air bag can cause death or serious injury to a child 12 years or younger, including a child in a rear-facing child restraint.**
- **Never install a rear-facing child restraint in the front seat of a vehicle. Only use a rear-facing child restraint in the rear seat. If the vehicle does not have a rear seat, do not transport a rear-facing child restraint in that vehicle.**

Older Children And Child Restraints

Children who are two years old or who have outgrown their rear-facing convertible child seat can ride forward-facing in the vehicle. Forward-facing child seats and convertible child seats used in the forward-facing direction are for children who are over two years old or who have outgrown the rear-facing weight or height limit of their rear-facing convertible child seat. Children should remain in a forward-facing child seat with a harness for as long as possible, up to the highest weight or height allowed by the child seat.

All children whose weight or height is above the forward-facing limit for the child seat should use a belt-positioning booster seat until the vehicle's seat belts fit properly. If the child cannot sit with knees bent over the vehicle's seat cushion while the child's back is against the seatback, they should use a belt-positioning booster seat. The child and belt-positioning booster seat are held in the vehicle by the seat belt.

WARNING!

- **Improper installation can lead to failure of an infant or child restraint. It could come loose in a collision. The child could be badly injured or killed. Follow the child restraint manufacturer's directions exactly when installing an infant or child restraint.**
- **After a child restraint is installed in the vehicle, do not move the vehicle seat forward or rearward because it can loosen the child restraint attachments. Remove the child restraint before adjusting the vehicle seat position. When the vehicle seat has been adjusted, reinstall the child restraint.**
- **When your child restraint is not in use, secure it in the vehicle with the seat belt or LATCH anchorages, or remove it from the vehicle. Do not leave it loose in the vehicle. In a sudden stop or accident, it could strike the occupants or seatbacks and cause serious personal injury.**

Children Too Large For Booster Seats

Children who are large enough to wear the shoulder belt comfortably, and whose legs are long enough to bend over the front of the seat when their back is against the seatback, should use the seat belt in a rear seat. Use this simple 5-step test to decide whether the child can use the vehicle's seat belt alone:

1. Can the child sit all the way back against the back of the vehicle seat?
2. Do the child's knees bend comfortably over the front of the vehicle seat – while the child is still sitting all the way back?
3. Does the shoulder belt cross the child's shoulder between the neck and arm?
4. Is the lap part of the belt as low as possible, touching the child's thighs and not the stomach?
5. Can the child stay seated like this for the whole trip?

If the answer to any of these questions was "no," then the child still needs to use a booster seat in this vehicle. If the child is using the lap/shoulder belt, check seat belt fit periodically and make sure the seat belt buckle is latched. A child's squirming or slouching can move the belt out of position. If the shoulder belt contacts the face or neck, move the child closer to the center of the vehicle, or use a booster seat to position the seat belt on the child correctly.

WARNING!
Never allow a child to put the shoulder belt under an arm or behind their back. In a crash, the shoulder belt will not protect a child properly, which may result in serious injury or death. A child must always wear both the lap and shoulder portions of the seat belt correctly.

Recommendations For Attaching Child Restraints

Restraint Type	Combined Weight of the Child + Child Restraint	Use Any Attachment Method Shown With An "X" Below			
		LATCH – Lower Anchors Only	Seat Belt Only	LATCH – Lower Anchors + Top Tether Anchor	Seat Belt + Top Tether Anchor
Rear-Facing Child Restraint	Up to 65 lbs (29.5 kg)	X	X		
Rear-Facing Child Restraint	More than 65 lbs (29.5 kg)		X		
Forward-Facing Child Restraint	Up to 65 lbs (29.5 kg)			X	X
Forward-Facing Child Restraint	More than 65 lbs (29.5 kg)				X

Lower Anchors And Tethers For CHildren (LATCH) / ISOFIX Restraint System

LATCH Label

Your vehicle is equipped with the child restraint anchorage system called LATCH, which stands for Lower Anchors and Tethers for CHildren. The LATCH system has three vehicle anchor points for installing LATCH-equipped child seats. There are two lower anchorages located at the back of the seat cushion where it meets the seatback and one top tether anchorage located behind the seating position. These anchorages are used to install LATCH-equipped child seats without using the vehicle's seat belts. Some seating positions may have a top tether anchorage but no lower anchorages. In these seating positions, the seat belt must be used with the top tether anchorage to install the child restraint. Please see the following table for more information.

LATCH Positions For Installing Child Restraints In This Vehicle

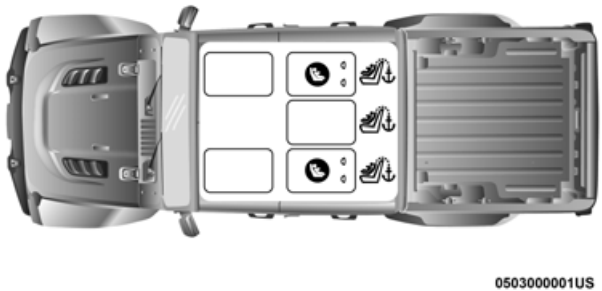

LATCH Positions

Lower Anchorage Symbol (2 Anchorages Per Seating Position)

Top Tether Anchorage Symbol

Frequently Asked Questions About Installing Child Restraints With LATCH		
What is the weight limit (child's weight + weight of the child restraint) for using the LATCH anchorage system to attach the child restraint?	65 lbs (29.5 kg)	Use the LATCH anchorage system until the combined weight of the child and the child restraint is 65 lbs (29.5 kg). Use the seat belt and tether anchor instead of the LATCH system once the combined weight is more than 65 lbs (29.5 kg).
Can the LATCH anchorages and the seat belt be used together to attach a rear-facing or forward-facing child restraint?	No	Do not use the seat belt when you use the LATCH anchorage system to attach a rear-facing or forward-facing child restraint. Booster seats may be attached to the LATCH anchorages if allowed by the booster seat manufacturer. See your booster seat owner's manual for more information.
Can a child seat be installed in the center position using the inner LATCH lower anchorages from the outboard seating positions?	Yes	You can install child restraints with flexible lower anchors in the center position. The inner anchorages are 19.2 inches (488 mm) apart. Do not install child restraints with rigid lower anchors in the center position.

Frequently Asked Questions About Installing Child Restraints With LATCH		
Can two child restraints be attached using a common lower LATCH anchorage?	No	Never "share" a LATCH anchorage with two or more child restraints. If the center position does not have dedicated LATCH lower anchorages, use the seat belt to install a child seat in the center position next to a child seat using the LATCH anchorages in an outboard position.
Can the rear-facing child restraint touch the back of the front passenger seat?	Yes	The child seat may touch the back of the front passenger seat if the child restraint manufacturer also allows contact. See your child restraint owner's manual for more information.
Can the rear head restraints be removed?	Yes	The center head restraint can be removed if it interferes with the installation of the child restraint. See "Head Restraints" in "Getting To Know Your Vehicle" for further information.

Locating The LATCH Anchorages

The lower anchorages are round bars that are found at the rear of the seat cushion where it meets the seat-back. They are just visible when you lean into the rear seat to install the child restraint. You will easily feel them if you run your finger along the gap between the seat-back and seat cushion.

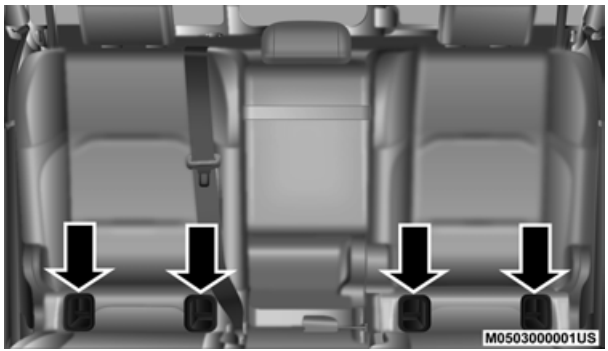

LATCH Anchorages

Locating The Upper Tether Anchorages

There are tether strap anchorages located behind each of the rear seats.

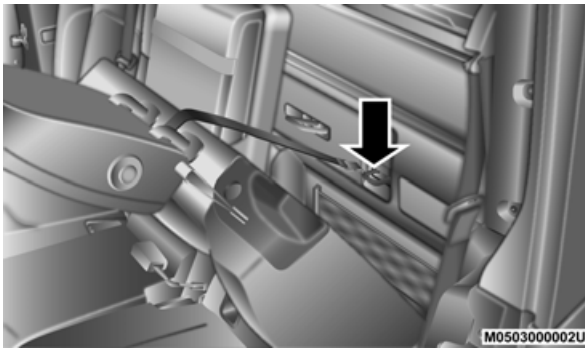

Tether Strap Anchorages

LATCH-compatible child restraint systems will be equipped with a rigid bar or a flexible strap on each side. Each will have a hook or connector to attach to the lower anchorage and a way to tighten the connection to the anchorage. Forward-facing child restraints and some rear-facing child restraints will also be equipped with a tether strap. The tether strap will have a hook at the end to attach to the top tether anchorage and a way to tighten the strap after it is attached to the anchorage.

Center Seat LATCH

Do not install child restraints with rigid lower attachments in the center seating position. Only install this type of child restraint in the outboard seating positions. Child restraints with flexible, webbing mounted lower attachments can be installed in any rear seating position.

WARNING!
Never use the same lower anchorage to attach more than one child restraint. If you are installing LATCH-compatible child restraints next to each other, you must use the seat belt for the center position. You can then use either the LATCH anchors or the vehicle's seat belt for installing child seats in the outboard positions.
Please refer to "Installing The LATCH-Compatible Child Restraint System" for typical installation instructions.

Always follow the directions of the child restraint manufacturer when installing your child restraint. Not all child restraint systems will be installed as described here.

To Install A LATCH-Compatible Child Restraint

If the selected seating position has a Switchable Automatic Locking Retractor (ALR) seat belt, stow the seat belt, following the instructions below. See the section "Installing Child Restraints Using the Vehicle Seat Belt" to check what type of seat belt each seating position has.

1. Loosen the adjusters on the lower straps and on the tether strap of the child seat so that you can more easily attach the hooks or connectors to the vehicle anchorages.

2. Place the child seat between the lower anchorages for that seating position. For some second row seats, you may need to recline the seat and / or raise the head restraint (if adjustable) to get a better fit. If the rear seat can be moved forward and rearward in the vehicle, you may wish to move it to its rear-most position to make room for the child seat. You may also move the front seat forward to allow more room for the child seat.

3. Attach the lower hooks or connectors of the child restraint to the lower anchorages in the selected seating position.

4. If the child restraint has a tether strap, connect it to the top tether anchorage. See the section "Installing Child Restraints Using the Top Tether Anchorage" for directions to attach a tether anchor.

5. Tighten all of the straps as you push the child restraint rearward and downward into the seat. Remove slack in the straps according to the child restraint manufacturer's instructions.

6. Test that the child restraint is installed tightly by pulling back and forth on the child seat at the belt path. It should not move more than 1 inch (25.4 mm) in any direction.

How To Stow An Unused Switchable-ALR (ALR) Seat Belt:

When using the LATCH attaching system to install a child restraint, stow all ALR seat belts that are not being used by other occupants or being used to secure child restraints. An unused belt could injure a child if they play with it and accidentally lock the seat belt retractor. Before installing a child restraint using the LATCH system, buckle the seat belt behind the child restraint and out of the child's reach. If the buckled seat belt interferes with the child restraint installation, instead of buckling it behind the child restraint, route the seat belt through the child restraint belt path and then buckle it. Do not lock the seat belt. Remind all children in the vehicle that the seat belts are not toys and that they should not play with them.

WARNING!

- **Improper installation of a child restraint to the LATCH anchorages can lead to failure of the restraint. The child could be badly injured or killed. Follow the child restraint manufacturer's directions exactly when installing an infant or child restraint.**
- **Child restraint anchorages are designed to withstand only those loads imposed by correctly-fitted child restraints. Under no circumstances are they to be used for adult seat belts, harnesses, or for attaching other items or equipment to the vehicle.**

Installing Child Restraints Using The Vehicle Seat Belt

Child restraint systems are designed to be secured in vehicle seats by lap belts or the lap belt portion of a lap/shoulder belt.

WARNING!

- **Improper installation or failure to properly secure a child restraint can lead to failure of the restraint. The child could be badly injured or killed.**
- **Follow the child restraint manufacturer's directions exactly when installing an infant or child restraint.**

The seat belts in the passenger seating positions are equipped with a Switchable Automatic Locking Retractor (ALR) that is designed to keep the lap portion of the seat belt tight around the child restraint so that it is not necessary to use a locking clip. The ALR retractor can be "switched" into a locked mode by pulling all of the webbing out of the retractor and then letting the webbing retract back into the retractor. If it is locked, the ALR will make a clicking noise while the webbing is pulled back into the retractor.

Refer to the "Automatic Locking Mode" description in "Switchable Automatic Locking Retractors (ALR)" under "Occupant Restraint Systems" for additional information on ALR.

Please see the table below and the following sections for more information.

Lap/Shoulder Belt Systems For Installing Child Restraints In This Vehicle

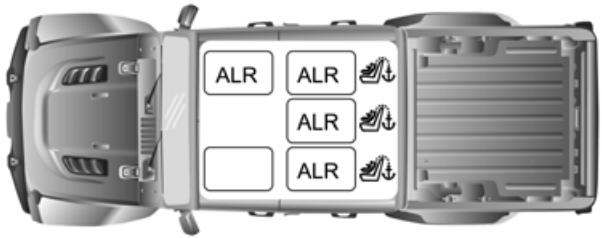

Automatic Locking Retractor Locations

ALR = Switchable Automatic Locking Retractor

Top Tether Anchorage Symbol

Frequently Asked Questions About Installing Child Restraints With Seat Belts		
What is the weight limit (child's weight + weight of the child restraint) for using the Tether Anchor with the seat belt to attach a forward facing child restraint?	Weight limit of the Child Restraint	Always use the tether anchor when using the seat belt to install a forward facing child restraint, up to the recommended weight limit of the child restraint.
Can the rear-facing child restraint touch the back of the front passenger seat?	Yes	Contact between the front passenger seat and the child restraint is allowed, if the child restraint manufacturer also allows contact.
Can the rear head restraints be removed?	Yes	The center head restraint can be removed if it interferes with the installation of the child restraint. See "Head Restraints" in "Getting To Know Your Vehicle" for further information.
Can the buckle stalk be twisted to tighten the seat belt against the belt path of the child restraint?	No	Do not twist the buckle stalk in a seating position with an ALR retractor.

Installing A Child Restraint With A Switchable Automatic Locking Retractor (ALR):

Child restraint systems are designed to be secured in vehicle seats by lap belts or the lap belt portion of a lap/shoulder belt.

WARNING!

- **Improper installation or failure to properly secure a child restraint can lead to failure of the restraint. The child could be badly injured or killed.**
- **Follow the child restraint manufacturer's directions exactly when installing an infant or child restraint.**

1. Place the child seat in the center of the seating position. For some second row seats, you may need to recline the seat and/or raise the head restraint (if adjustable) to get a better fit. If the rear seat can be moved forward and rearward in the vehicle, you may wish to move it to its rear-most position to make room for the child seat. You may also move the front seat forward to allow more room for the child seat.
2. Pull enough of the seat belt webbing from the retractor to pass it through the belt path of the child restraint. Do not twist the belt webbing in the belt path.
3. Slide the latch plate into the buckle until you hear a "click."
4. Pull on the webbing to make the lap portion tight against the child seat.
5. To lock the seat belt, pull down on the shoulder part of the belt until you have pulled all the seat belt webbing out of the retractor. Then, allow the webbing to retract back into the retractor. As the webbing retracts, you will hear a clicking sound. This means the seat belt is now in the Automatic Locking mode.
6. Try to pull the webbing out of the retractor. If it is locked, you should not be able to pull out any webbing. If the retractor is <u>not</u> locked, repeat step 5.
7. Finally, pull up on any excess webbing to tighten the lap portion around the child restraint while you push the child restraint rearward and downward into the vehicle seat.
8. If the child restraint has a top tether strap and the seating position has a top tether anchorage, connect the tether strap to the anchorage and tighten the tether strap. See the section "Installing Child Restraints Using the Top Tether Anchorage" for directions to attach a tether anchor.

9. Test that the child restraint is installed tightly by pulling back and forth on the child seat at the belt path. It should not move more than 1 inch (25.4 mm) in any direction.

Any seat belt system will loosen with time, so check the belt occasionally, and pull it tight if necessary.

Installing Child Restraints Using The Top Tether Anchorage

WARNING!

Do not attach a tether strap for a rear-facing car seat to any location in front of the car seat, including the seat frame or a tether anchorage. Only attach the tether strap of a rear-facing car seat to the tether anchorage that is approved for that seating position, located behind the top of the vehicle seat. See the section "Lower Anchors and Tethers for CHildren (LATCH) Restraint System" for the location of approved tether anchorages in your vehicle.

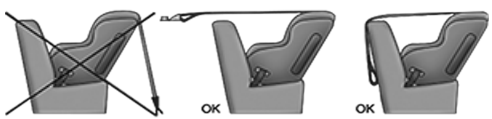

The Top Tether anchorages are located behind each rear seating position. To attach the tether strap of the child restraint:

1. Place the child restraint on the seat and adjust the tether strap so that it will reach over the seat back, under the head restraint and to the tether anchor directly behind the seat.
2. Release the seat back by pulling the release strap located on the top of the seat back to provide room to reach the tether anchor.
3. Route the tether strap to provide the most direct path between the anchorage and the child seat. The tether strap should go between the head restraint posts underneath the head restraint. You may need to adjust the head restraint (if adjustable) to the upward position to pass the tether strap underneath the head restraint and between its posts.
4. Attach the hook to the wire anchorage on the cab back wall (inside the opening labeled with the tether anchorage symbol.)
5. Push the seat back rearward until the latch engages and no red indicator is showing on the strap

6. Tighten the tether strap according to the child seat manufacturer's instructions.

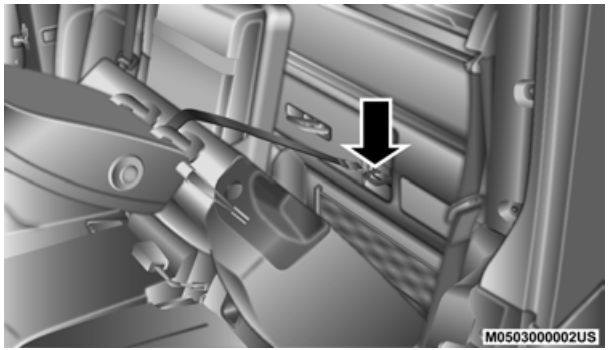

Tether Anchorage Locations

WARNING!

- **An incorrectly anchored tether strap could lead to increased head motion and possible injury to the child. Use only the anchorage position directly behind the child seat to secure a child restraint top tether strap.**
- **If your vehicle is equipped with a split rear seat, make sure the tether strap does not slip into the opening between the seatbacks as you remove slack in the strap.**

Transporting Pets

Air Bags deploying in the front seat could harm your pet. An unrestrained pet will be thrown about and possibly injured, or injure a passenger during panic braking or in a collision.

Pets should be restrained in the rear seat (if equipped) in pet harnesses or pet carriers that are secured by seat belts.

SAFETY TIPS

Transporting Passengers

NEVER TRANSPORT PASSENGERS IN THE CARGO AREA.

WARNING!

- **Do not leave children or animals inside parked vehicles in hot weather. Interior heat build-up may cause serious injury or death.**
- **It is extremely dangerous to ride in a cargo area, inside or outside of a vehicle. In a collision, people riding in these areas are more likely to be seriously injured or killed.**
- **Do not allow people to ride in any area of your vehicle that is not equipped with seats and seat belts.**

(Continued)

WARNING! *(Continued)*

- **Be sure everyone in your vehicle is in a seat and using a seat belt properly.**

Exhaust Gas

WARNING!

Exhaust gases can injure or kill. They contain carbon monoxide (CO), which is colorless and odorless. Breathing it can make you unconscious and can eventually poison you. To avoid breathing (CO), follow these safety tips:

- **Do not run the engine in a closed garage or in confined areas any longer than needed to move your vehicle in or out of the area.**
- **If you are required to drive with the trunk/liftgate/rear doors open, make sure that all windows are closed and the climate control BLOWER switch is set at high speed. DO NOT use the recirculation mode.**
- **If it is necessary to sit in a parked vehicle with the engine running, adjust your heating or cooling controls to force outside air into the vehicle. Set the blower at high speed.**

The best protection against carbon monoxide entry into the vehicle body is a properly maintained engine exhaust system.

Whenever a change is noticed in the sound of the exhaust system, when exhaust fumes can be detected inside the vehicle, or when the underside or rear of the vehicle is damaged, have a competent mechanic inspect the complete exhaust system and adjacent body areas for broken, damaged, deteriorated, or mispositioned parts. Open seams or loose connections could permit exhaust fumes to seep into the passenger compartment. In addition, inspect the exhaust system each time the vehicle is raised for lubrication or oil change. Replace as required.

Safety Checks You Should Make Inside The Vehicle

Seat Belts

Inspect the seat belt system periodically, checking for cuts, frays, and loose parts. Damaged parts must be replaced immediately. Do not disassemble or modify the system.

Front seat belt assemblies must be replaced after a collision. Rear seat belt assemblies must be replaced after a collision if they have been damaged (i.e., bent retractor, torn webbing, etc.). If there is any question regarding seat belt or retractor condition, replace the seat belt.

Air Bag Warning Light

The Air Bag warning light will turn on for four to eight seconds as a bulb check when the ignition switch is first turned to ON/RUN. If the light is either not on during starting, stays on, or turns on while driving, have the system inspected at an authorized dealer as soon as possible. This light will illuminate with a single chime when a fault with the Air Bag Warning Light has been detected, it will stay on until the fault is removed. If the light comes on intermittently or remains on while driving, have an authorized dealer service the vehicle immediately. Refer to "Occupant Restraint Systems" in "Safety" for further information.

Defroster

Check operation by selecting the defrost mode and place the blower control on high speed. You should be able to feel the air directed against the windshield. See an authorized dealer for service if your defroster is inoperable.

Floor Mat Safety Information

Always use floor mats designed to fit your vehicle. Only use a floor mat that does not interfere with the operation of the pedal assemblies. Only use a floor mat that is securely attached using the floor mat fasteners so it cannot slip out of position and interfere with the pedal assemblies or impair safe operation of your vehicle in other ways.

WARNING!

An improperly attached, damaged, folded, or stacked floor mat, or damaged floor mat fasteners may cause your floor mat to interfere with the accelerator, brake, or clutch pedals and cause a loss of vehicle control. To prevent SERIOUS INJURY or DEATH:

- **ALWAYS securely attach your floor mat using the floor mat fasteners. DO NOT install your floor mat upside down or turn your floor mat over. Lightly pull to confirm mat is secured using the floor mat fasteners on a regular basis.**
- **ALWAYS REMOVE THE EXISTING FLOOR MAT FROM THE VEHICLE before installing any other floor mat. NEVER install or stack an additional floor mat on top of an existing floor mat.**
- **ONLY install floor mats designed to fit your vehicle. NEVER install a floor mat that cannot be properly attached and secured to your vehicle. If a floor mat needs to be replaced, only use a FCA approved floor mat for the specific make, model, and year of your vehicle.**

(Continued)

WARNING! *(Continued)*

- **ONLY use the driver's side floor mat on the driver's side floor area. To check for interference, with the vehicle properly parked with the engine off, fully depress the accelerator, the brake, and the clutch pedal (if present) to check for interference. If your floor mat interferes with the operation of any pedal, or is not secure to the floor, remove the floor mat from the vehicle and place the floor mat in your trunk.**
- **ONLY use the passenger's side floor mat on the passenger's side floor area.**
- **ALWAYS make sure objects cannot fall or slide into the driver's side floor area when the vehicle is moving. Objects can become trapped under accelerator, brake, or clutch pedals and could cause a loss of vehicle control.**
- **NEVER place any objects under the floor mat (e.g., towels, keys, etc.). These objects could change the position of the floor mat and may cause interference with the accelerator, brake, or clutch pedals.**

(Continued)

WARNING! *(Continued)*

- **If the vehicle carpet has been removed and re-installed, always properly attach carpet to the floor and check the floor mat fasteners are secure to the vehicle carpet. Fully depress each pedal to check for interference with the accelerator, brake, or clutch pedals then re-install the floor mats.**
- **It is recommended to only use mild soap and water to clean your floor mats. After cleaning, always check your floor mat has been properly installed and is secured to your vehicle using the floor mat fasteners by lightly pulling mat.**

Periodic Safety Checks You Should Make Outside The Vehicle

Tires

Examine tires for excessive tread wear and uneven wear patterns. Check for stones, nails, glass, or other objects lodged in the tread or sidewall. Inspect the tread for cuts and cracks. Inspect sidewalls for cuts, cracks, and bulges. Check the wheel nuts for tightness. Check the tires (including spare) for proper cold inflation pressure.

Lights

Have someone observe the operation of brake lights and exterior lights while you work the controls. Check turn signal and high beam indicator lights on the instrument panel.

Door Latches

Check for proper closing, latching, and locking.

Fluid Leaks

Check the area under vehicle after overnight parking for fuel, coolant, oil, or other fluid leaks. Also, if gasoline fumes are detected or if fuel, or brake fluid leaks are suspected, the cause should be located and corrected immediately.

STARTING AND OPERATING

STARTING THE ENGINE

Before starting your vehicle, adjust your seat, adjust both inside and outside mirrors, and fasten your seat belts.

WARNING!

- **When exiting the vehicle, always remove the key fob from the ignition and lock your vehicle.**
- **Never leave children alone in a vehicle, or with access to an unlocked vehicle.**
- **Allowing children to be in a vehicle unattended is dangerous for a number of reasons. A child or others could be seriously or fatally injured. Children should be warned not to touch the parking brake, brake pedal or the gear selector.**
- **Do not leave the key fob in or near the vehicle, or in a location accessible to children. A child could operate power windows, other controls, or move the vehicle.**
- **Do not leave children or animals inside parked vehicles in hot weather. Interior heat build-up may cause serious injury or death.**

Manual Transmission — If Equipped

Apply the parking brake, place the gear selector in NEUTRAL, and press the clutch pedal before starting the vehicle. This vehicle is equipped with a clutch interlocking ignition system. It will not start unless the clutch pedal is pressed to the floor.

Four-Wheel Drive Models Only

In 4L mode, if the vehicle is stalled, the engine will start regardless of whether or not the clutch pedal is pressed to the floor. This feature enhances off-road performance by allowing the vehicle to start when in 4L without having to press the clutch pedal. The “4WD Low Indicator Light” will illuminate when the transfer case has been shifted into this mode.

Automatic Transmission — If Equipped

Start the vehicle with the gear selector in the PARK position (vehicle can also be started in NEUTRAL). Apply the brake before shifting to any driving range.

Normal Starting

To Turn On The Engine Using The ENGINE START/STOP Button

1. The transmission must be in PARK or NEUTRAL.
2. Press and hold the brake pedal while pushing the ENGINE START/STOP button once.
3. The system takes over and attempts to start the vehicle. If the vehicle fails to start, the starter will disengage automatically after 10 seconds.
4. If you wish to stop the cranking of the engine prior to the engine starting, push the button again.

NOTE:
Normal starting of either a cold or a warm engine is obtained without pumping or pressing the accelerator pedal.

To Turn Off The Engine Using ENGINE START/STOP Button

1. Place the gear selector in PARK, then push and release the ENGINE START/STOP button.
2. The ignition will return to the OFF mode.
3. If the gear selector is not in PARK (with vehicle stopped) and the ENGINE START/STOP button is pushed once, the transmission will automatically select PARK and the engine will turn off, however the ignition will remain in the ACC mode (NOT the OFF mode). Never leave a vehicle out of the PARK position, or it could roll.
4. If the gear selector is in NEUTRAL, and the vehicle speed is below 5 mph (8 km/h), pushing the ENGINE START/STOP button once will turn the engine off. The ignition will remain in the ACC mode.
5. If the vehicle speed is above 5 mph (8 km/h), the ENGINE START/STOP button must be held for two seconds (or three short pushes in a row) to turn the engine off. The ignition will remain in the ACC mode (NOT the OFF mode) if the engine is turned off when the transmission is not in PARK.

NOTE:
The system will automatically time out and the ignition will cycle to the OFF mode after 30 minutes of inactivity if the ignition is left in the ACC or RUN (engine not running) mode and the transmission is in PARK.

ENGINE START/STOP Button Functions — With Driver's Foot Off The Brake Pedal (In PARK Or NEUTRAL Position)

The ENGINE START/STOP button operates similar to an ignition switch. It has three modes: OFF, ACC, and RUN. To change the ignition modes without starting the vehicle and use the accessories, follow these steps:

1. Starting with the ignition in the OFF mode.
2. Push the ENGINE START/STOP button once to place the ignition to the ACC mode (instrument cluster will display "ACC").
3. Push the ENGINE START/STOP button a second time to place the ignition to the RUN mode (instrument cluster will display "ON/RUN").
4. Push the ENGINE START/STOP button a third time to return the ignition to the OFF mode (instrument cluster will display "OFF").

AutoPark

AutoPark is a supplemental feature to assist in placing the vehicle in PARK should the situations on the following pages occur. It is a back up system and should not be relied upon as the primary method by which the driver shifts the vehicle into PARK.

The conditions under which AutoPark will engage are outlined on the following pages.

WARNING!

- **Driver inattention could lead to failure to place the vehicle in PARK. ALWAYS DO A VISUAL CHECK that your vehicle is in PARK by verifying that a solid (not blinking) "P" is indicated in the instrument cluster display and on the gear selector. If the "P" indicator is blinking, your vehicle is not in PARK. As an added precaution, always apply the parking brake when exiting the vehicle.**
- **AutoPark is a supplemental feature. It is not designed to replace the need to shift your vehicle into PARK. It is a back up system and should not be relied upon as the primary method by which the driver shifts the vehicle into PARK.**

If the vehicle is not in PARK and the driver turns off the engine, the vehicle may AutoPark.

AutoPark will engage when all of these conditions are met:

- Vehicle is equipped with an 8-speed transmission
- Driver door is ajar or in conditions where driver door is removed an additional trigger would be if the driver is off the seat (seat pad sensor detects driver missing)
- Vehicle is not in PARK
- Vehicle Speed is 0 mph (0 km/h)
- Ignition switched from RUN to OFF

NOTE:
For Keyless Go equipped vehicles, The engine will turn off and the ignition will change to ACC mode. After 30 minutes the ignition switches to OFF automatically, unless the driver turns the ignition OFF.

If the vehicle is not in PARK and the driver exits the vehicle with the engine running, the vehicle may AutoPark.

AutoPark will engage when all of these conditions are met:

- Vehicle is equipped with an 8-speed transmission
- Driver door is ajar or in conditions where driver door is removed an additional trigger would be if the driver is off the seat (seat pad sensor detects driver missing)
- Vehicle is not in PARK
- Driver door is removed
- Vehicle speed is 1.2 mph (2.0 km/h) or less
- Driver seat belt is unbuckled
- Driver door is ajar
- Brake Pedal is not depressed

The MESSAGE "**AutoPark Engaged Shift to P then Shift to Gear**" will display in the instrument cluster.

NOTE:
In some cases the ParkSense graphic will be displayed in the instrument cluster. In these cases, the gear selector must be returned to "P" to select desired gear.

If the driver shifts into PARK while moving, the vehicle may AutoPark.

AutoPark will engage **ONLY** when vehicle speed is 1.2 mph (2.0 km/h) or less.

The MESSAGE "**Vehicle Speed is Too High to Shift to P**" will be displayed in the instrument cluster if vehicle speed is above 1.2 mph (2.0 km/h).

WARNING!
If vehicle speed is above 1.2 mph (2.0 km/h), the transmission will default to NEUTRAL until the vehicle speed drops below 1.2 mph (2.0 km/h). A vehicle left in the NEUTRAL position can roll. As an added precaution, always apply the parking brake when exiting the vehicle.

4WD LOW

AutoPark will be disabled when operating the vehicle in 4WD LOW.

The MESSAGE "**AutoPark Disabled**" will be displayed in the instrument cluster.

Additional customer warnings will be given when both of these conditions are met:

- Vehicle is not in PARK
- Driver door is ajar

The MESSAGE "**AutoPark Not Engaged**" will be displayed in the instrument cluster. A warning chime will continue until you shift the vehicle into PARK or the driver door is closed.

ALWAYS DO A VISUAL CHECK that your vehicle is in PARK by looking for the "P" in the instrument cluster display and on the gear selector. As an added precaution, always apply the parking brake when exiting the vehicle.

Extreme Cold Weather (Below –22°F Or –30°C)

To ensure reliable starting at these temperatures, use of an externally powered electric engine block heater (available from your authorized dealer) is recommended.

If Engine Fails To Start

If the engine fails to start after you have followed the "Normal Starting" or "Extreme Cold Weather" procedure, it may be flooded. Push the accelerator pedal all the way to the floor and hold it there. Crank the engine for no more than 15 seconds. This should clear any excess fuel in case the engine is flooded. Leave the ignition in the RUN position, release the accelerator pedal and repeat the "Normal Starting" procedure.

WARNING!

- **Never pour fuel or other flammable liquid into the throttle body air inlet opening in an attempt to start the vehicle. This could result in flash fire causing serious personal injury.**
- **Do not attempt to push or tow your vehicle to get it started. Vehicles equipped with an automatic transmission cannot be started this way. Unburned fuel could enter the catalytic converter and once the engine has started, ignite and damage the converter and vehicle.**
- **If the vehicle has a discharged battery, booster cables may be used to obtain a start from a booster battery or the battery in another vehicle. This type of start can be dangerous if done improperly. Refer to "Jump Starting Procedure" in "In Case Of Emergency" for further information.**

CAUTION!

To prevent damage to the starter, do not continuously crank the engine for more than 25 seconds at a time. Wait 60 seconds before trying again.

After Starting

The idle speed is controlled automatically, it will decrease as the engine warms up.

ENGINE BLOCK HEATER — IF EQUIPPED

The engine block heater warms the engine, and permits quicker starts in cold weather. Connect the cord to a standard 110-115 Volt AC electrical outlet with a grounded, three-wire extension cord.

The engine block heater must be plugged in at least one hour to have an adequate warming effect on the engine.

The engine block heater cord is found under the hood bundled in front of the battery tray.

WARNING!

Remember to disconnect the engine block heater cord before driving. Damage to the 110-115 Volt AC electrical cord could cause electrocution.

ENGINE BREAK-IN RECOMMENDATIONS

A long break-in period is not required for the engine and drivetrain (transmission and axle) in your vehicle.

Drive moderately during the first 300 miles (500 km). After the initial 60 miles (100 km), speeds up to 50 or 55 mph (80 or 90 km/h) are desirable.

While cruising, brief full-throttle acceleration within the limits of local traffic laws contributes to a good break-in. Wide-open throttle acceleration in low gear can be detrimental and should be avoided.

The engine oil installed in the engine at the factory is a high-quality energy conserving type lubricant. Oil changes should be consistent with anticipated climate conditions under which vehicle operations will occur.

For the recommended viscosity and quality grades, refer to "Fluids And Lubricants" in "Technical Specifications" in this manual.

CAUTION!
Never use Non-Detergent Oil or Straight Mineral Oil in the engine or damage may result.

NOTE:
A new engine may consume some oil during its first few thousand miles (kilometers) of operation. This should be considered a normal part of the break-in and not interpreted as a problem.

PARKING BRAKE

Before exiting the vehicle, make sure that the parking brake is fully applied. Also, be certain to leave an automatic transmission in PARK, or manual transmission in REVERSE or FIRST gear.

The parking brake lever is located in the center console behind the gear selector. To apply the parking brake, pull the lever up as firmly as possible. To release the parking brake, pull the lever up slightly, push the center button, then lower the lever completely.

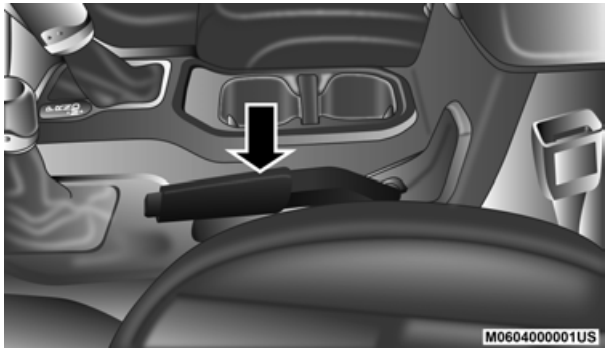

Parking Brake Lever

When the parking brake is applied with the ignition switch ON, the "Brake Warning Light" in the instrument cluster will illuminate.

NOTE:

- When the parking brake is applied and the automatic transmission is placed in gear, the "Brake Warning Light" will flash. If vehicle speed is detected, a chime will sound to alert the driver. Fully release the parking brake before attempting to move the vehicle.
- This light only shows that the parking brake is applied. It does not show the degree of brake application.

When parking on a hill, it is important to turn the front wheels toward the curb on a downhill grade and away from the curb on an uphill grade. For vehicles equipped with an automatic transmission, apply the parking brake before placing the gear selector in PARK, otherwise the load on the transmission locking mechanism may make it difficult to move the gear selector out of PARK. The parking brake should always be applied whenever the driver is not in the vehicle.

WARNING!

- **Never use the PARK position on an automatic transmission as a substitute for the parking brake. Always apply the parking brake fully when parked to guard against vehicle movement and possible injury or damage.**
- **When exiting the vehicle, always remove the key fob from the vehicle and lock your vehicle.**
- **Never leave children alone in a vehicle, or with access to an unlocked vehicle. Allowing children to be in a vehicle unattended is dangerous for a number of reasons. A child or others could be seriously or fatally injured. Children should be warned not to touch the parking brake, brake pedal or the gear selector.**

(Continued)

WARNING! *(Continued)*

- **Do not leave the key fob in or near the vehicle, or in a location accessible to children. A child could operate power windows, other controls, or move the vehicle.**
- **Be sure the parking brake is fully disengaged before driving; failure to do so can lead to brake failure and a collision.**
- **Always fully apply the parking brake when leaving your vehicle or it may roll and cause damage or injury. Also, be certain to leave an automatic transmission in PARK, a manual transmission in REVERSE or FIRST gear. Failure to do so may cause the vehicle to roll and cause damage or injury.**

CAUTION!

If the "Brake Warning Light" remains on with the parking brake released, a brake system malfunction is indicated. Have the brake system serviced by an authorized dealer immediately.

MANUAL TRANSMISSION — IF EQUIPPED

WARNING!

You or others could be injured if you leave the vehicle unattended without having the parking brake fully applied. The parking brake should always be applied when the driver is not in the vehicle, especially on an incline.

CAUTION!

- **Never drive with your foot resting on the clutch pedal, or attempt to hold the vehicle on a hill with the clutch pedal partially engaged, as this will cause abnormal wear on the clutch.**
- **Do not drive with your hand resting on the gear selector as the force exerted, even if slight, could lead over time to premature wear of the gearbox internal components.**

NOTE:
During cold weather, you may experience increased effort in shifting until the transmission fluid warms up. This is normal.

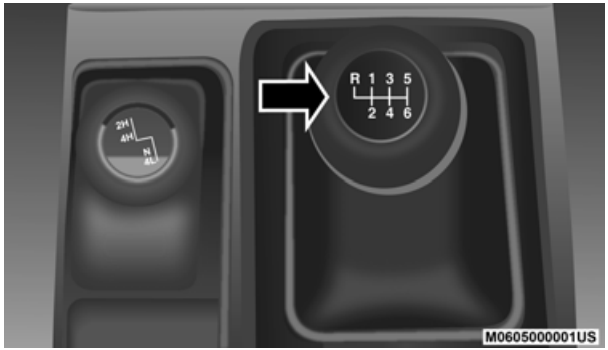

Manual Transmission Shifter

To shift the gears, fully press the clutch pedal and place the gear selector into the desired gear position (the diagram for the engagement of the gears is displayed on the handle of the selector).

To engage REVERSE gear from the NEUTRAL position, lift the REVERSE ring, located below the knob and move the gear selector all the way left and then forward.

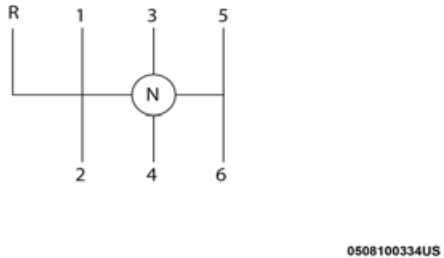

Shift Pattern

Shifting

Fully press the clutch pedal before shifting gears. As you release the clutch pedal, lightly press the accelerator pedal.

You should always use first gear when starting from a standing position.

NOTE:
A certain amount of noise from the transmission is normal. This noise can be most noticeable when the vehicle is idling in NEUTRAL with the clutch engaged (clutch pedal released), but it may also be heard when driving. The noise may also be more noticeable when the transmission is warm. This noise is normal and is not an indication of a problem with your clutch or transmission.

Recommended Vehicle Shift Speeds

To utilize your manual transmission efficiently for both fuel economy and performance, it should be upshifted as listed in the recommended shift speed chart. Shift at the vehicle speeds listed for acceleration. When heavily loaded or pulling a trailer these recommended upshift speeds may not apply.

Manual Transmission Shift Speeds in MPH (KM/H)						
Engine	Speeds	1 to 2	2 to 3	3 to 4	4 to 5	5 to 6
3.6L	Accel.	15 (24)	24 (39)	50 (80)	65 (104)	70 (112)
	Cruise	10 (16)	19 (31)	40 (64)	55 (88)	65 (105)

NOTE:
Vehicle speeds shown in the chart above are for 2H and 4H only, vehicle speeds in 4L would be significantly less.

Downshifting

Moving from a high gear down to a lower gear is recommended to preserve brakes when driving down steep hills. In addition, downshifting at the right time provides better acceleration when you desire to resume speed. Downshift progressively. Do not skip gears to avoid overspeeding the engine and clutch.

NOTE:
Above certain speeds downshifts may be blocked and not available.

WARNING!

Do not downshift for additional engine braking on a slippery surface. The drive wheels could lose their grip, and the vehicle could skid.

CAUTION!

- **Skipping gears and downshifting into lower gears at higher vehicle speeds can damage the engine and clutch systems. Any attempt to shift into lower gear with clutch pedal depressed may result damage to the clutch system. Shifting into lower gear and releasing the clutch may result in engine damage.**

(Continued)

CAUTION! *(Continued)*

- **When descending a hill, be very careful to downshift one gear at a time to prevent overspeeding the engine which can cause engine damage, and/or clutch damage, even if the clutch pedal is pressed. If transfer case is in low range the vehicle speeds to cause engine and clutch damage are significantly lower.**
- **Failure to follow the maximum recommended downshifting speeds may cause engine damage and/or damage the clutch, even if the clutch pedal is pressed.**

(Continued)

CAUTION! *(Continued)*

- **Descending a hill in low range with clutch pedal depressed could result in clutch damage.**

Maximum Recommended Downshift Speeds

CAUTION!

Failure to follow the maximum recommended downshifting speeds may cause the engine to overspeed and/or damage the clutch disc, even if the clutch pedal is pressed.

Manual Transmission Downshift Speeds in MPH (KM/H)					
Gear Selection	6 to 5	5 to 4	4 to 3	3 to 2	2 to 1
Maximum Speed	80 (129)	70 (113)	50 (81)	30 (48)	15 (24)

NOTE:
Vehicle speeds shown in the chart above are for 2H and 4H only, vehicle speeds in 4L would be significantly less.

AUTOMATIC TRANSMISSION — IF EQUIPPED

CAUTION!

- **Shift into or out of PARK or REVERSE only after the vehicle has come to a complete stop.**
- **Do not shift between PARK, REVERSE, NEUTRAL, or DRIVE when the engine is above idle speed.**
- **Before shifting into any gear, make sure your foot is firmly pressing the brake pedal.**

NOTE:
You must press and hold the brake pedal while shifting out of PARK.

WARNING!

- **Never use the PARK position as a substitute for the parking brake. Always apply the parking brake fully when exiting the vehicle to guard against vehicle movement and possible injury or damage.**
- **Your vehicle could move and injure you and others if it is not in PARK. Check by trying to move the transmission gear selector out of PARK with the brake pedal released. Make sure the transmission is in PARK before exiting the vehicle.**

(Continued)

WARNING! *(Continued)*

- **The transmission may not engage PARK if the vehicle is moving. Always bring the vehicle to a complete stop before shifting to PARK, and verify that the transmission gear position indicator solidly indicates PARK (P) without blinking. Ensure that the vehicle is completely stopped, and the PARK position is properly indicated, before exiting the vehicle.**
- **It is dangerous to shift out of PARK or NEUTRAL if the engine speed is higher than idle speed. If your foot is not firmly pressing the brake pedal, the vehicle could accelerate quickly forward or in reverse. You could lose control of the vehicle and hit someone or something. Only shift into gear when the engine is idling normally and your foot is firmly pressing the brake pedal.**
- **Unintended movement of a vehicle could injure those in or near the vehicle. As with all vehicles, you should never exit a vehicle while the engine is running. Before exiting a vehicle, always come to a complete stop, then apply the parking brake, shift the transmission into PARK, and turn the ignition OFF. When the ignition is in the OFF mode, the transmission is locked in PARK, securing the vehicle against unwanted movement.**

(Continued)

WARNING! *(Continued)*

- **When exiting the vehicle, always make sure the ignition is in the OFF mode, remove the key fob from the vehicle, and lock the vehicle.**
- **Never leave children alone in a vehicle, or with access to an unlocked vehicle. Allowing children to be in a vehicle unattended is dangerous for a number of reasons. A child or others could be seriously or fatally injured. Children should be warned not to touch the parking brake, brake pedal or the transmission gear selector.**
- **Do not leave the key fob in or near the vehicle (or in a location accessible to children), and do not leave the ignition in the ACC or ON/RUN mode. A child could operate power windows, other controls, or move the vehicle.**

Ignition Park Interlock

This vehicle is equipped with an Ignition Park Interlock system which requires the transmission to be in PARK before the ignition can be turned to the OFF mode. This helps the driver avoid inadvertently leaving the vehicle without placing the transmission in PARK. This system also locks the transmission in PARK whenever the ignition is in the OFF mode.

NOTE:
The transmission is NOT locked in PARK when the ignition is in the ACC mode (even though the engine will be off). Ensure that the transmission is in PARK, and the ignition is **OFF** (not in ACC mode) before exiting the vehicle.

Brake/Transmission Shift Interlock System

This vehicle is equipped with a Brake Transmission Shift Interlock system (BTSI) that holds the transmission gear selector in PARK unless the brakes are applied. To shift the transmission out of PARK, the engine must be running and the brake pedal must be pressed. The brake pedal must also be pressed to shift from NEUTRAL into DRIVE or REVERSE when the vehicle is stopped or moving at low speeds.

Eight–Speed Automatic Transmission

The transmission gear range (PRNDM) is displayed both beside the gear selector and in the instrument cluster. To select a gear range, press the lock button on the gear selector and move the selector rearward or forward. To shift the transmission out of PARK, the engine must be running and the brake pedal must be pressed. You must also press the brake pedal to shift from NEUTRAL into DRIVE or REVERSE when the vehicle is stopped or moving at low speeds. Select the DRIVE range for normal driving.

NOTE:
In the event of a mismatch between the gear selector position and the actual transmission gear (for example, driver selects PARK while driving), the position indicator will blink continuously until the selector is returned to the proper position, or the requested shift can be completed.

The electronically-controlled transmission adapts its shift schedule based on driver inputs, along with environmental and road conditions. The transmission electronics are self-calibrating; therefore, the first few shifts on a new vehicle may be somewhat abrupt. This is a normal condition, and precision shifts will develop within a few hundred miles (kilometers).

Only shift from DRIVE to PARK or REVERSE when the accelerator pedal is released and the vehicle is stopped. Be sure to keep your foot on the brake pedal when shifting between these gears.

The transmission gear selector provides PARK, REVERSE, NEUTRAL, DRIVE and MANUAL (AutoStick) shift positions. Manual shifts can be made using the AutoStick shift control. Toggling the gear selector forward (-) or rearward (+) while in the MANUAL (AutoStick) position (beside the DRIVE position) will manually select the transmission gear, and will display the current gear in the instrument cluster. Refer to "AutoStick" in this section for further information.

Gear Selector

NOTE:
If the gear selector cannot be moved to the PARK, REVERSE, or NEUTRAL position (when pushed forward), it is probably in the AutoStick (+/-) position (beside the DRIVE position). In AutoStick mode, the transmission gear (1, 2, 3, etc.) is displayed in the instrument cluster. Move the gear selector to the right (into the DRIVE [D] position) for access to PARK, REVERSE, and NEUTRAL.

Gear Ranges

Do not depress the accelerator pedal when shifting from PARK or NEUTRAL into another gear range.

NOTE:
After selecting any gear range, wait a moment to allow the selected gear to engage before accelerating. This is especially important when the engine is cold.

PARK (P)

This range supplements the parking brake by locking the transmission. The engine can be started in this range. Never attempt to use PARK while the vehicle is in motion. Apply the parking brake when exiting the vehicle in this range.

When parking on a level surface, you may shift the transmission into PARK first, and then apply the parking brake.

When parking on a hill, apply the parking brake before shifting the transmission to PARK. As an added precaution, turn the front wheels toward the curb on a downhill grade and away from the curb on an uphill grade.

When exiting the vehicle, always:

- Apply the parking brake,
- Shift the transmission into PARK,
- Turn the ignition OFF and,
- Remove the key fob from the vehicle.

NOTE:
On four-wheel drive vehicles be sure that the transfer case is in a drive position.

WARNING!

- **Never use the PARK position as a substitute for the parking brake. Always apply the parking brake fully when exiting the vehicle to guard against vehicle movement and possible injury or damage.**
- **Your vehicle could move and injure you and others if it is not in PARK. Check by trying to move the transmission gear selector out of PARK with the brake pedal released. Make sure the transmission is in PARK before exiting the vehicle.**

(Continued)

WARNING! *(Continued)*

- **The transmission may not engage PARK if the vehicle is moving. Always bring the vehicle to a complete stop before shifting to PARK, and verify that the transmission gear position indicator solidly indicates PARK (P) without blinking. Ensure that the vehicle is completely stopped, and the PARK position is properly indicated, before exiting the vehicle.**
- **It is dangerous to shift out of PARK or NEUTRAL if the engine speed is higher than idle speed. If your foot is not firmly pressing the brake pedal, the vehicle could accelerate quickly forward or in reverse. You could lose control of the vehicle and hit someone or something. Only shift into gear when the engine is idling normally and your foot is firmly pressing the brake pedal.**
- **Unintended movement of a vehicle could injure those in or near the vehicle. As with all vehicles, you should never exit a vehicle while the engine is running. Before exiting a vehicle, always come to a complete stop, then apply the parking brake, shift the transmission into PARK, and turn the ignition OFF. When the ignition is in the OFF mode, the transmission is locked in PARK, securing the vehicle against unwanted movement.**

(Continued)

WARNING! *(Continued)*

- **When exiting the vehicle, always make sure the ignition is in the OFF mode, remove the key fob from the vehicle, and lock the vehicle.**
- **Never leave children alone in a vehicle, or with access to an unlocked vehicle. Allowing children to be in a vehicle unattended is dangerous for a number of reasons. A child or others could be seriously or fatally injured. Children should be warned not to touch the parking brake, brake pedal or the transmission gear selector.**
- **Do not leave the key fob in or near the vehicle (or in a location accessible to children), and do not leave the ignition in the ACC or ON/RUN mode. A child could operate power windows, other controls, or move the vehicle.**

CAUTION!

- **Before moving the transmission gear selector out of PARK, you must start the engine, and also press the brake pedal. Otherwise, damage to the gear selector could result.**

(Continued)

CAUTION! *(Continued)*

- **DO NOT race the engine when shifting from PARK or NEUTRAL into another gear range, as this can damage the drivetrain.**

The following indicators should be used to ensure that you have properly engaged the transmission into the PARK position:

- When shifting into PARK, push the lock button on the gear selector and firmly move the gear selector all the way forward until it stops and is fully seated.
- Look at the transmission gear position display and verify that it indicates the PARK position (P), and is not blinking.
- With brake pedal released, verify that the gear selector will not move out of PARK.

NOTE:
If the gear selector cannot be moved to the PARK position (when pushed forward), it is probably in the AutoStick (+/-) position (beside the DRIVE position). In AutoStick mode, the transmission gear (1, 2, 3, etc.) is displayed in the instrument cluster. Move the gear selector to the right (into the DRIVE [D] position) for access to PARK, REVERSE, and NEUTRAL.

REVERSE (R)

This range is for moving the vehicle backward. Shift into REVERSE only after the vehicle has come to a complete stop.

NEUTRAL (N)

Use this range when the vehicle is standing for prolonged periods with the engine running. Apply the parking brake and shift the transmission into PARK if you must exit the vehicle.

WARNING!

Do not coast in NEUTRAL and never turn off the ignition to coast down a hill. These are unsafe practices that limit your response to changing traffic or road conditions. You might lose control of the vehicle and have a collision.

CAUTION!

- **Towing the vehicle, coasting, or driving for any other reason with the transmission in NEUTRAL can cause severe transmission damage.**

(Continued)

CAUTION! *(Continued)*
• **Refer to "Recreational Towing" in "Starting And Operating" and "Towing A Disabled Vehicle" in "In Case Of Emergency" for further information.**

DRIVE (D)

This range should be used for most city and highway driving. It provides the smoothest upshifts and downshifts, and the best fuel economy. The transmission automatically upshifts through all forward gears. The DRIVE position provides optimum driving characteristics under all normal operating conditions.

When frequent transmission shifting occurs (such as when operating the vehicle under heavy loading conditions, in hilly terrain, traveling into strong head winds, or while towing a heavy trailer), use the AutoStick shift control (refer to "AutoStick" in this section for further information) to select a lower gear. Under these conditions, using a lower gear will improve performance and extend transmission life by reducing excessive shifting and heat buildup.

During extremely cold temperatures (-22°F [-30°C] or below), transmission operation may be modified depending on engine and transmission temperature as well as vehicle speed. Normal operation will resume once the transmission temperature has risen to a suitable level.

MANUAL (M)

The MANUAL (M, +/-) position (beside the DRIVE position) enables full manual control of transmission shifting (also known as AutoStick mode; refer to "AutoStick" in this section for further information). Toggling the gear selector forward (-) or rearward (+) while in the MANUAL (AutoStick) position will manually select the transmission gear, and will display the current gear in the instrument cluster.

Transmission Limp Home Mode

Transmission function is monitored electronically for abnormal conditions. If a condition is detected that could result in transmission damage, Transmission Limp Home Mode is activated. In this mode, the transmission may operate only in certain gears, or may not shift at all. Vehicle performance may be severely degraded and the engine may stall. In some situations, the transmission may not re-engage if the engine is turned off and restarted. The Malfunction Indicator Light (MIL) may be illuminated. A message in the instrument cluster will inform the driver of the more serious conditions, and indicate what actions may be necessary.

In the event of a momentary problem, the transmission can be reset to regain all forward gears by performing the following steps:

NOTE:
In cases where the instrument cluster message indicates the transmission may not re-engage after engine shutdown, perform this procedure only in a desired location (preferably, at an authorized dealer).

1. Stop the vehicle.
2. Shift the transmission into PARK, if possible. If not, shift the transmission to NEUTRAL.
3. Push and hold the ENGINE START/STOP button until the engine turns OFF.
4. Wait approximately 30 seconds.
5. Restart the engine.
6. Shift into the desired gear range. If the problem is no longer detected, the transmission will return to normal operation.

NOTE:
Even if the transmission can be reset, we recommend that you visit an authorized dealer at your earliest possible convenience. An authorized dealer has diagnostic equipment to assess the condition of your transmission.

If the transmission cannot be reset, authorized dealer service is required.

AutoStick

AutoStick is a driver-interactive transmission feature providing manual shift control, giving you more control of the vehicle. AutoStick allows you to maximize engine braking, eliminate undesirable upshifts and downshifts, and improve overall vehicle performance. This system can also provide you with more control during passing, city driving, cold slippery conditions, mountain driving, trailer towing, and many other situations.

Operation

To activate AutoStick mode, move the gear selector into the MANUAL (M) position (beside the DRIVE position). The current transmission gear will be displayed in the instrument cluster. In AutoStick mode, you can use the gear selector in the MANUAL (M) position to manually shift the transmission. Tapping the gear selector forward (-) while in

the MANUAL (M) position will downshift the transmission to the next lower gear. Tapping the selector rearward (+) will command an upshift.

In AutoStick mode, the transmission will shift up or down when (+/-) is manually selected by the driver, unless an engine lugging or overspeed condition would result. It will remain in the selected gear until another upshift or downshift is chosen, except as described below.

- The transmission will automatically downshift as the vehicle slows (to prevent engine lugging) and will display the current gear.
- The transmission will automatically downshift to first gear when coming to a stop. After a stop, the driver should manually upshift (+) the transmission as the vehicle is accelerated.
- You can start out, from a stop, in first or second gear (or third gear, in 4L range). Tapping (+) (at a stop) will allow starting in second gear. Starting out in second or third gear can be helpful in snowy or icy conditions.
- If a requested downshift would cause the engine to over-speed, that shift will not occur.
- The system will ignore attempts to upshift at too low of a vehicle speed.
- Holding the gear selector in the (-) position will downshift the transmission to the lowest gear possible at the current speed.
- Transmission shifting will be more noticeable when AutoStick is enabled.
- The system may revert to automatic shift mode if a fault or overheat condition is detected.

NOTE:
When Hill Descent Control is enabled, AutoStick is not active.

To disengage AutoStick mode, return the gear selector to the DRIVE position. You can shift in or out of the AutoStick position at any time without taking your foot off the accelerator pedal.

WARNING!
Do not downshift for additional engine braking on a slippery surface. The drive wheels could lose their grip and the vehicle could skid, causing a collision or personal injury.

FOUR–WHEEL DRIVE OPERATION

WARNING!
Failure to engage a transfer case position completely can cause transfer case damage or loss of power and vehicle control. You could have a collision. Do not drive the vehicle unless the transfer case is fully engaged.

Four-Position Transfer Case

Four-Wheel Drive Gear Selector

The transfer case provides four mode positions:

- 2H (Two-Wheel Drive High Range)
- 4H (Four-Wheel Drive High Range)
- N (Neutral)
- 4L (Four-Wheel Drive Low Range)

For additional information on the appropriate use of each transfer case mode position, see the information below:

2H

Two-Wheel Drive High Range — This range is for normal street and highway driving on dry, hard surfaced roads.

4H

Four-Wheel Drive High Range — This range maximizes torque to the front driveshaft, forcing the front and rear wheels to rotate at the same speed. This range provides additional traction for loose, slippery road surfaces only.

NEUTRAL (N)

WARNING!
You or others could be injured or killed if you leave the vehicle unattended with the transfer case in the NEUTRAL (N) position without first fully engaging the parking brake. The transfer case NEUTRAL (N) position disengages both the front and rear driveshafts from the powertrain, and will allow the vehicle to roll, even if the automatic transmission is in PARK (or manual transmission is in gear). The parking brake should always be applied when the driver is not in the vehicle.

Neutral — This range disengages both the front and rear driveshafts from the powertrain. To be used for flat towing behind another vehicle.

Refer to "Recreational Towing" in "Starting And Operating" for further information.

4L

Four-Wheel Drive Low Range — This range provides low speed four-wheel drive. It maximizes torque to the front driveshaft, forcing the front and rear wheels to rotate at the same speed. This range provides additional traction and maximum pulling power for loose, slippery road surfaces only. Do not exceed 25 mph (40 km/h).

The transfer case is intended to be driven in the 2H position for normal street and highway conditions, such as hard-surfaced roads.

In the event that additional traction is required, the transfer case 4H and 4L positions can be used to lock the front and rear driveshafts together, forcing the front and rear wheels to rotate at the same speed. The 4H and 4L positions are intended for loose, slippery road surfaces only and not intended for normal driving. Driving in the 4H and 4L positions on hard-surfaced roads will cause increased tire wear and damage to the driveline components. Refer to "Shifting Procedures" in this section for further information on shifting into 4H or 4L.

The instrument cluster alerts the driver that the vehicle is in four-wheel drive, and the front and rear driveshafts are locked together. The light will illuminate when the transfer case is shifted into the 4H position.

When operating your vehicle in 4L, the engine speed will be approximately three times (four times for Rubicon models) that of the 2H or 4H positions at a given road speed. Take care not to overspeed the engine.

Proper operation of four-wheel drive vehicles depends on tires of equal size, type, and circumference on each wheel. Any difference will adversely affect shifting and cause damage to the transfer case.

Because four-wheel drive provides improved traction, there is a tendency to exceed safe turning and stopping speeds. Do not go faster than road conditions permit.

Shifting Procedures

2H To 4H Or 4H To 2H

Shifting between 2H and 4H can be made with the vehicle stopped or in motion. The preferred shifting speed would be 0 to 45 mph (72 km/h). With the vehicle in motion, the transfer case will engage/disengage faster if you momentarily release the accelerator pedal after completing the shift. Do not accelerate while shifting the transfer case. Apply a constant force when shifting the transfer case lever.

NOTE:

- Do not attempt to make a shift while only the front or rear wheels are spinning. The front and rear driveshaft speeds must be equal for the shift to take place. Shifting while only the front or rear wheels are spinning can cause damage to the transfer case.
- Delayed shifts out of four-wheel drive may be experienced due to uneven tire wear, low or uneven tire pressures, excessive vehicle loading, or cold temperatures.
- Shifting effort will increase with speed, this is normal.

During cold weather, you may experience increased effort in shifting until the transfer case fluid warms up. This is normal.

4H To 4L Or 4L To 4H

With the vehicle rolling at 2 to 3 mph (3 to 5 km/h), shift an automatic transmission into NEUTRAL (N), or press the clutch pedal on a manual transmission. While the vehicle is coasting at 2 to 3 mph (3 to 5 km/h), shift the transfer case lever firmly to the desired position. Do not pause with the transfer case in N (Neutral). Once the shift is completed, place the automatic transmission into DRIVE or release the clutch pedal on a manual transmission.

NOTE:
Shifting into or out of 4L is possible with the vehicle completely stopped; however, difficulty may occur due to the mating teeth not being properly aligned. Several attempts may be required for clutch teeth alignment and shift completion to occur. The preferred method is with the

vehicle rolling at 2 to 3 mph (3 to 5 km/h). Avoid attempting to engage or disengage 4L with the vehicle moving faster than 2 to 3 mph (3 to 5 km/h).

WARNING!
Failure to engage a transfer case position completely can cause transfer case damage or loss of power and vehicle control. You could have a collision. Do not drive the vehicle unless the transfer case is fully engaged.

Trac-Lok Rear Axle — If Equipped

The Trac-Lok rear axle provides a constant driving force to both rear wheels and reduces wheel spin caused by the loss of traction at one driving wheel. If traction differs between the two rear wheels, the differential automatically proportions the usable torque by providing more torque to the wheel that has traction.

Trac-Lok is especially helpful during slippery driving conditions. With both rear wheels on a slippery surface, a slight application of the accelerator will supply maximum traction.

WARNING!
On vehicles equipped with a limited-slip differential, never run the engine with one rear wheel off the ground. The vehicle may drive through the rear wheel remaining on the ground and cause you to lose control of your vehicle.

Axle Lock (Tru-Lok) — Rubicon Models

The AXLE LOCK switch is located on the instrument panel (to the right of the steering column).

Axle Lock Switch Panel

This feature will only activate when the following conditions are met:

- Ignition in RUN position, vehicle in 4L (Low) range.
- Vehicle speed should be 10 mph (16 km/h) or less.
- Both right and left wheels on axle are at the same speed.

To activate the system, push the AXLE LOCK switch down to lock the rear axle only (the "REAR ONLY" will illuminate), push the switch up to lock the front axle and rear axle (the "FRONT + REAR" will illuminate). When the rear axle is locked, pushing the bottom of switch again will lock or unlock the front axle.

NOTE:
The indicator lights will flash until the axles are fully locked or unlocked.

To unlock the axles, push the AXLE LOCK OFF button.

Axle lock will disengage if the vehicle is taken out of 4L (Low) range, or the ignition switch is turned to the OFF position.

The axle lock disengages at speeds above 30 mph (48 km/h), and will automatically re-lock once vehicle speed is less than 10 mph (16 km/h).

Electronic Sway Bar Disconnect — If Equipped

Your vehicle may be equipped with an electronic disconnecting stabilizer/sway bar. This system allows greater front suspension travel in off-road situations.

This system is controlled by the SWAY BAR switch located on the instrument panel (to the right of the steering column).

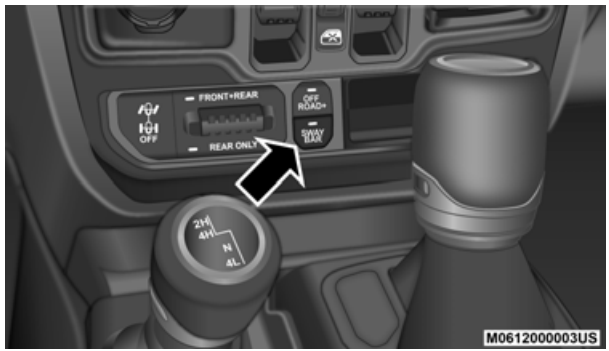

Sway Bar Switch

Push the SWAY BAR switch to activate the system. Push the switch again to deactivate the system. The "Sway Bar Indicator Light" (located in the instrument cluster) will illuminate when the bar is disconnected. The "Sway Bar Indicator

Light" will flash during activation transition, or when activation conditions are not met. The stabilizer/sway bar should remain in on-road mode during normal driving conditions.

WARNING!
Ensure the stabilizer/sway bar is reconnected before driving on hard surfaced roads or at speeds above 18 mph (29 km/h); a disconnected stabilizer/sway bar may contribute to the loss of vehicle control, which could result in serious injury. Under certain circumstances, the front stabilizer/sway bar enhances vehicle stability and assists with vehicle control. The system monitors vehicle speed and will attempt to reconnect the stabilizer/sway bar at speeds over 18 mph (29 km/h). This is indicated by a flashing or solid "Sway Bar Indicator Light." Once vehicle speed is reduced below 14 mph (22 km/h), the system will once again attempt to return to off-road mode.

To disconnect the stabilizer/sway bar, shift to either 4H or 4L and push the SWAY BAR switch to obtain the off-road position. The "Sway Bar Indicator Light" will flash until the stabilizer/sway bar has been fully disconnected. Refer to "Four-Wheel Drive Operation" in this section for further information.

NOTE:
The stabilizer/sway bar may be torque locked due to left and right suspension height differences. This condition is due to driving surface differences or vehicle loading. In order for the stabilizer/sway bar to disconnect/reconnect, the right and left halves of the bar must be aligned. This alignment may require that the vehicle be driven onto level ground or rocked from side to side.

To return to on-road mode, push the SWAY BAR switch again.

WARNING!
If the stabilizer/sway bar will not return to on-road mode, the "Sway Bar Indicator Light" will flash in the instrument cluster and vehicle stability may be reduced. Do not attempt to drive the vehicle over 18 mph (29 km/h). Driving faster than 18 mph (29 km/h) with a disconnected stabilizer/sway bar may contribute to the loss of vehicle control, which could result in serious injury.

Off Road+ — If Equipped

Off Road+ Switch

When activated, Off Road+ is designed to improve the user experience when using specific Off Road driving modes. To activate Off Road+, push the Off Road+ switch in the switch bank. The vehicle's performance will improve depending of which Four Wheel Drive (4WD) mode is activated.

NOTE:
Off Road+ will not function in Two Wheel Drive High (2H) mode. If the button is pushed while in 2H mode, the cluster display will show the message "Off Road+ Unavailable Shift to 4WD".

When Off Road+ is active, the following features will activate:

- The Off Road+ telltale will illuminate in the Instrument Cluster Display
- A mode specific message will display the Instrument Cluster Display
- Off Road pages will launch on the radio head-unit (if equipped)
- The Off Road Camera will launch (if equipped)

Once in Off Road+, the vehicle will begin to behave in different ways depending on the 4WD mode in use. The following enhancements will occur when using Off Road+.

4L

- Engine/Transmission Calibration: Rock Crawl and controllability focus, change in shifting schedule when rock crawling, pedal calibration shifted to de-gain and low range, operates at lower vehicle speeds
- Traction Control: Aggressive brake lock differential tuning at slower speed or 1st gear
- Off Road+: Recall the last status between ignition cycles

4H

- Engine/Transmission Calibration: Improved sand performance/ wheel slip focus, change in shift schedule for sport mode, pedal calibration set to aggressive, operates at elevated vehicle speeds
- Traction Control: High wheel speed, slip tuning brake lock differential with no engine management
- Electronic Stability Control: ESC Off with unlimited speed
- Off Road+: Will default to OFF between ignition cycles

Speed Control and Adaptive Cruise Control (ACC) will not function while using Off Road+. A dedicated cluster message will display indicating this if either feature is activated while in Off Road+.

If the ESC OFF button is pushed while in Off Road+, the following will occur on the vehicle:

- Push of the ESC Button: Traction Control will turn off, but Stability Control will remain active.
- Hold the ESC OFF Button for five seconds: Traction Control and Stability Control will turn off.

ELECTRO-HYDRAULIC POWER STEERING

Your vehicle is equipped with an electro-hydraulic power steering system that will give you good vehicle response and increased ease of maneuverability in tight spaces. The system will vary its assist to provide light efforts while parking and good feel while driving. If the electro-hydraulic power steering system experiences a fault that prevents it from providing power steering assist, then the system will provide mechanical steering capability.

CAUTION!
Extreme steering maneuvers may cause the electrically driven pump to reduce or stop power steering assistance in order to prevent damage to the system. Normal operation will resume once the system is allowed to cool.

If the “SERVICE POWER STEERING” message and a flashing icon are displayed on the instrument cluster screen, it indicates that the vehicle needs to be taken to the dealer for service. It is likely the vehicle has lost power steering assistance. Refer to “Instrument Cluster Display” in “Getting To Know Your Instrument Panel” for further information.

If the "POWER STEERING HOT" message and an icon are displayed on the instrument cluster screen, it indicates that extreme steering maneuvers may have occurred, which caused an over temperature condition in the power steering system. You will lose power steering assistance momentarily until the over temperature condition no longer exists. Once driving conditions are safe, then pull over and let vehicle idle for a few moments until the light turns off. Refer to "Instrument Cluster Display" in "Getting To Know Your Instrument Panel" for further information.

NOTE:

- Even if power steering assistance is no longer operational, it is still possible to steer the vehicle. Under these conditions there will be a substantial increase in steering effort, especially at very low vehicle speeds and during parking maneuvers.
- If the condition persists, see your authorized dealer for service.

STOP/START SYSTEM — AUTOMATIC TRANSMISSION (IF EQUIPPED)

The Stop/Start function is developed to reduce fuel consumption. The system will stop the engine automatically during a vehicle stop if the required conditions are met. Releasing the brake pedal or pressing the accelerator pedal will automatically re-start the engine.

Electronic Stop/Start (ESS) vehicles have been upgraded with a heavy duty starter, enhanced battery, and other upgraded engine parts, to handle the additional engine starts.

NOTE:
It is recommended that the Stop/Start System be disabled during off-road use.

Secondary Battery

Your vehicle may be equipped with a secondary battery used to power the Stop/Start system and the 12 volt vehicle electrical system. The secondary battery is located behind the wheel well for the front passenger wheel.

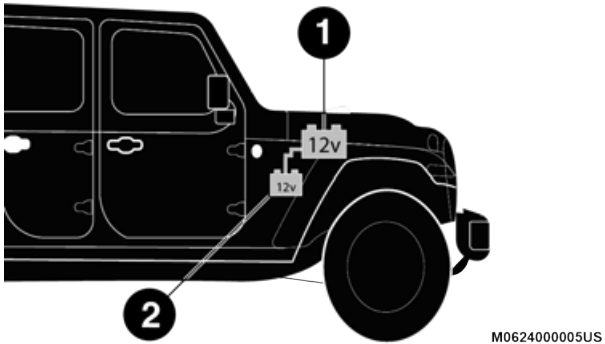

Battery Locations

1 — Primary Battery
2 — Secondary Battery

Automatic Mode

WARNING!
• **Vehicles with the Stop/Start system will be equipped with two batteries. Both the main and the supplemental batteries must be disconnected to completely de-energize the 12 volt electrical system.**

(Continued)

WARNING! *(Continued)*
• **Serious injury or death could result if you do not disconnect both batteries. To learn how to properly disconnect, see your authorized dealer.**

The Stop/Start feature is enabled after every normal customer engine start. At that time, the system will go into STOP/START READY and if all other conditions are met, can go into a STOP/START AUTOSTOP ACTIVE "Autostop" mode.

To Activate The Autostop Mode, The Following Must Occur:

- The system must be in STOP/START READY state. A STOP/START READY message will be displayed in the instrument cluster display within the Stop/Start section. Refer to "Instrument Cluster" in "Getting To Know Your Instrument Panel" for further information.
- The vehicle must be completely stopped.
- The gear selector must be in a forward gear and the brake pedal depressed.

The engine will shut down, the tachometer will move to the zero position and the Stop/Start telltale will illuminate indicating you are in Autostop. Customer settings will be maintained upon return to an engine running condition.

Possible Reasons The Engine Does Not Autostop

Prior to engine shut down, the system will check many safety and comfort conditions to see if they are fulfilled. Detailed information about the operation of the Stop/Start system may be viewed in the instrument cluster display Stop/Start Screen. In the following situations, the engine will not stop:

- Driver's seat belt is not buckled
- Driver's door is not closed
- Battery temperature is too warm or cold
- Battery charge is low
- The vehicle is on a steep grade
- Cabin heating or cooling is in process and an acceptable cabin temperature has not been achieved
- HVAC is set to full defrost mode at a high blower speed
- HVAC set to MAX A/C
- Engine has not reached normal operating temperature
- Engine temperature too high
- The transmission is not in a forward gear
- Hood is open
- 4WD system is put into 4L or Neutral
- Brake pedal is not pressed with sufficient pressure

Other Factors Which Can Inhibit Autostop Include:

- Accelerator pedal input
- Vehicle speed threshold not achieved from previous auto-stop
- Steering angle beyond threshold
- ACC is on and speed is set
- Vehicle is at high altitude
- System fault present

It may be possible for the vehicle to be driven several times without the Stop/Start system going into a STOP/START READY state under more extreme conditions of the items listed above.

To Start The Engine While In Autostop Mode

While in a forward gear, the engine will start when the brake pedal is released or the throttle pedal is depressed. The transmission will automatically re-engage upon engine restart.

Conditions That Will Cause The Engine To Start Automatically While In Autostop Mode:

- The transmission selector is moved out of DRIVE
- To maintain cabin temperature comfort
- Actual cabin temperature is significantly different than temperature set on Auto HVAC
- HVAC is set to full defrost mode
- HVAC system temperature or fan speed is manually adjusted
- Battery voltage drops too low
- Low brake vacuum (e.g. after several brake pedal applications)
- STOP/START OFF switch is pushed
- A Stop/Start system error occurs
- STOP/START AUTO STOP ACTIVE time exceeds 5 minutes
- 4WD system is put into 4L or Neutral mode
- Steering wheel is turned beyond threshold

To Manually Turn Off The Stop/Start System

1. Push the STOP/START OFF switch (located on the switch bank). The light on the switch will illuminate.

STOP/START Off Switch

2. The "STOP/START OFF" message will appear in instrument cluster display within the Stop/Start section. Refer to "Instrument Cluster" in "Getting To Know Your Instrument Panel" for further information.
3. At the next vehicle stop (after turning off the STOP/START system), the engine will not be stopped.
4. The Stop/Start system will reset itself back to an ON condition every time the ignition is turned off and back on.

To Manually Turn On The Stop/Start System

Push the STOP/START OFF switch (located on the switch bank). The light on the switch will turn off.

System Malfunction

If there is a malfunction in the Stop/Start system, the system will not shut down the engine. A "SERVICE STOP/START SYSTEM" message will appear in the instrument cluster display. Refer to "Instrument Cluster Display" in "Getting to Know Your Instrument Panel" for further information.

If the "SERVICE STOP/START SYSTEM" message appears in the instrument cluster display, have the system checked by an authorized dealer.

STOP/START SYSTEM — MANUAL TRANSMISSION (IF EQUIPPED)

The Stop/Start function is developed to reduce fuel consumption. The system will stop the engine automatically during a vehicle stop if the required conditions are met. Pressing the clutch pedal will automatically restart the vehicle.

Electronic Stop/Start (ESS) vehicles have been upgraded with a heavy duty starter, enhanced battery, and other upgraded engine parts, to handle the additional engine starts.

NOTE:
It is recommended that the Stop/Start System be disabled during off-road use.

Secondary Battery

Your vehicle may be equipped with a secondary battery used to power the Stop/Start system and the 12 volt vehicle electrical system. The secondary battery is located behind the wheel well for the front passenger wheel.

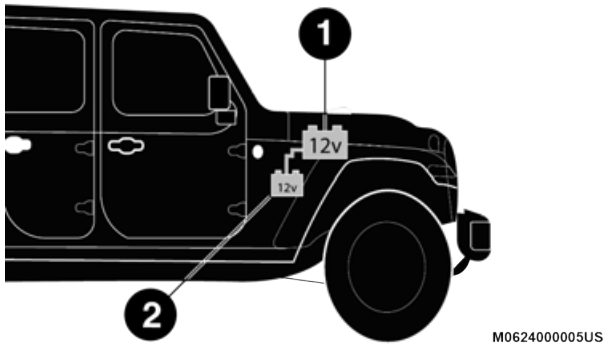

Battery Locations

1 — Primary Battery
2 — Secondary Battery

Automatic Mode

WARNING!
• **Vehicles with the Stop/Start system will be equipped with two batteries. Both the main and the supplemental batteries must be disconnected to completely de-energize the 12 volt electrical system.** • **Serious injury or death could result if you do not disconnect both batteries. To learn how to properly disconnect, see your authorized dealer.**

The Stop/Start feature is enabled after every normal customer engine start. It will remain in STOP/START NOT READY until you drive forward with a vehicle speed greater than 5 mph (8 km/h). At that time, the system will go into STOP/START READY and if all other conditions are met, can go into an STOP/START AUTO STOP ACTIVE mode.

To Activate The STOP/START AUTO STOP ACTIVE Mode, The Following Must Occur:

- The system must be in STOP/START READY state. A STOP/START READY message will be displayed in the instrument cluster. Refer to "Instrument Cluster Display" in "Getting To Know Your Instrument Panel" for further information.
- Vehicle speed must be less than 2 mph (3 km/h).
- The gear selector must be in the NEUTRAL position and the clutch pedal must be fully released.

The engine will shut down, **the tachometer will fall to the Stop/Start position,** the STOP/START AUTO STOP ACTIVE message will appear, and the heater/air conditioning (HVAC) air flow will be reduced.

Possible Reasons The Engine Does Not Autostop

Prior to engine shut down, the system will check many safety and comfort conditions to see if they are fulfilled. In following situations the engine will not stop:

- Driver's seat belt is not buckled
- Outside temperature is less than 10°F (–12°C) or greater than 109°F (43°C)
- Actual cabin temperature is significantly different than temperature set on Auto HVAC
- HVAC is set to full defrost mode
- Engine has not reached normal operating temperature
- Battery discharged

- When driving in REVERSE
- Hood is open
- 4WD system is put into 4L or Neutral
- Driver's seat is not occupied or driver door is open
- Vehicle is at high altitude
- The vehicle is on a steep grade
- Forward Gear is engaged
- Steering angle beyond threshold
- System fault is present
- HVAC set to MAX A/C

It may be possible for the vehicle to be driven several times without the Stop/Start system going into a STOP/START READY state under more extreme conditions of the items listed above.

To Start The Engine While In Autostop Mode

When the gear selector is in NEUTRAL, the engine will start when the clutch pedal is pressed (does not require complete/full pedal press). The vehicle will go into STOP/START SYSTEM NOT READY mode until the vehicle speed is greater than 5 mph (8 km/h).

Conditions that will cause the engine to start automatically while in STOP/START AUTO STOP ACTIVE mode, the engine will start automatically when:

- Actual cabin temperature is significantly different than temperature set on Auto HVAC.
- HVAC is set to full defrost mode
- STOP/START AUTOSTOP ACTIVE time exceeds 5 minutes
- Battery voltage drops too low
- Low brake vacuum e.g. after several brake pedal applications
- Vehicle is moving faster than 5 mph (8 km/h)
- STOP/START OFF switch is pressed
- 4WD system is put into 4L or Neutral mode
- Steering wheel is turned beyond threshold

To Manually Turn Off The Stop/Start System

1. Push the STOP/START Off switch (located on the switch bank). The light on the switch will illuminate.

STOP/START Off Switch

2. The STOP/START OFF message will appear in the instrument cluster. Refer to "Instrument Cluster Display" in "Getting To Know Your Instrument Panel" for further information.

3. At the next vehicle stop (after turning off the Stop/Start system), the engine will not be stopped.

4. If the Stop/Start system is manually turned off, the engine can only be started and stopped by cycling the ignition switch.

5. The Stop/Start system will reset itself back to an ON condition every time the ignition is turned off and back on.

To Manually Turn On The Stop/Start System

Push the STOP/START OFF switch (located on the switch bank). The light on the switch will turn off.

System Malfunction

If there is a malfunction in the Stop/Start system, the system will not shut down the engine. A "SERVICE STOP/START SYSTEM" message will appear in the instrument cluster display. Refer to "Instrument Cluster Display" in "Getting to Know Your Instrument Panel" for further information.

If the "SERVICE STOP/START SYSTEM" message appears in the instrument cluster display, have the system checked by an authorized dealer.

SPEED CONTROL — IF EQUIPPED

When engaged, the Speed Control takes over accelerator operations at speeds greater than 20 mph (32 km/h).

The Speed Control buttons are located on the right side of the steering wheel.

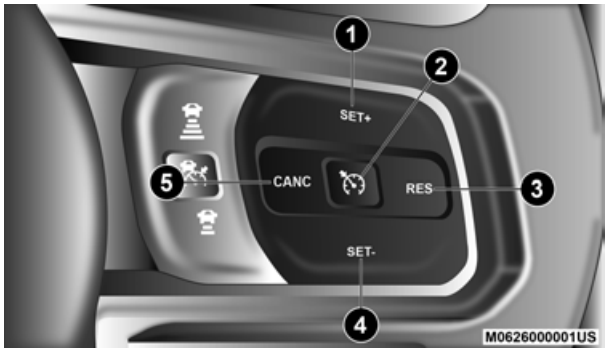

Speed Control Buttons

1 — SET (+)/Accel
2 — On/Off
3 — RES/Resume
4 — SET (-)/Decel
5 — CANC/Cancel

NOTE:
In order to ensure proper operation, the Speed Control System has been designed to shut down if multiple Speed Control functions are operated at the same time. If this occurs, the Speed Control System can be reactivated by pushing the Speed Control on/off button and resetting the desired vehicle set speed.

WARNING!
Speed Control can be dangerous where the system cannot maintain a constant speed. Your vehicle could go too fast for the conditions, and you could lose control and have an accident. Do not use Speed Control in heavy traffic or on roads that are winding, icy, snow-covered or slippery.

To Activate

Push the on/off button to activate the Speed Control. The cruise indicator light in the instrument cluster display will illuminate. To turn the system off, push the on/off button a second time. The cruise indicator light will turn off. The system should be turned off when not in use.

WARNING!
Leaving the Speed Control system on when not in use is dangerous. You could accidentally set the system or cause it to go faster than you want. You could lose control and have an accident. Always leave the system off when you are not using it.

To Set A Desired Speed

Turn the Speed Control on.

NOTE:
The vehicle should be traveling at a steady speed and on level ground before pushing the SET (+) or SET (-) button.

When the vehicle has reached the desired speed, push the SET (+) or SET (-) button and release. Release the accelerator and the vehicle will operate at the selected speed.

To Vary The Speed Setting

To Increase Speed

When the Speed Control is set, you can increase speed by pushing the SET **(+)** button.

The driver's preferred units can be selected through the instrument panel settings. Refer to "Instrument Cluster Display" in "Getting To Know Your Instrument Panel" for more information. The speed increment shown is dependent on the chosen speed unit of U.S. (mph) or Metric (km/h):

U.S. Speed (mph)

- Pushing the SET **(+)** button once will result in a 1 mph increase in set speed. Each subsequent tap of the button results in an increase of 1 mph.
- If the button is continually pushed, the set speed will continue to increase until the button is released, then the new set speed will be established.

Metric Speed (km/h)

- Pushing the SET **(+)** button once will result in a 1 km/h increase in set speed. Each subsequent tap of the button results in an increase of 1 km/h.
- If the button is continually pushed, the set speed will continue to increase until the button is released, then the new set speed will be established.

To Decrease Speed

When the Speed Control is set, you can decrease speed by pushing the SET **(-)** button.

The driver's preferred units can be selected through the instrument panel settings. Refer to "Instrument Cluster Display" in "Getting To Know Your Instrument Panel" for more information. The speed increment shown is dependent on the chosen speed unit of U.S. (mph) or Metric (km/h):

U.S. Speed (mph)

- Pushing the SET **(-)** button once will result in a 1 mph decrease in set speed. Each subsequent tap of the button results in a decrease of 1 mph.
- If the button is continually pushed, the set speed will continue to decrease until the button is released, then the new set speed will be established.

Metric Speed (km/h)

- Pushing the SET **(-)** button once will result in a 1 km/h decrease in set speed. Each subsequent tap of the button results in a decrease of 1 km/h.
- If the button is continually pushed, the set speed will continue to decrease until the button is released, then the new set speed will be established.

To Accelerate For Passing

Press the accelerator as you would normally. When the pedal is released, the vehicle will return to the set speed.

Using Speed Control On Hills

The transmission may downshift on hills to maintain the vehicle set speed.

NOTE:
The Speed Control system maintains speed up and down hills. A slight speed change on moderate hills is normal.

On steep hills, a greater speed loss or gain may occur so it may be preferable to drive without Speed Control.

WARNING!
Speed Control can be dangerous where the system cannot maintain a constant speed. Your vehicle could go too fast for the conditions, and you could lose control and have an accident. Do not use Speed Control in heavy traffic or on roads that are winding, icy, snow-covered or slippery.

To Resume Speed

To resume a previously set speed, push the RES button and release. Resume can be used at any speed above 20 mph (32 km/h).

To Deactivate

A soft tap on the brake pedal, pushing the CANC (cancel) button, or normal brake pressure while slowing the vehicle will deactivate the speed control without erasing the set speed from memory.

Pushing the on/off button or cycling the ignition to OFF, erases the set speed from memory.

ADAPTIVE CRUISE CONTROL (ACC) — IF EQUIPPED

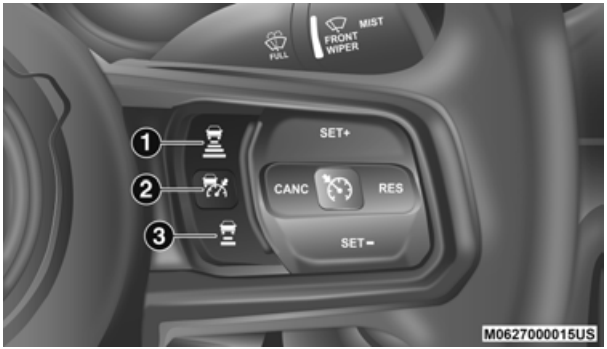

Adaptive Cruise Control Buttons

1 — Distance Setting Increase
2 — Adaptive Cruise Control (ACC) On/Off
3 — Distance Setting Decrease

Adaptive Cruise Control (ACC) increases the driving convenience provided by cruise control while traveling on highways and major roadways. However, it is not a safety system and not designed to prevent collisions. **Speed Control function performs differently. Please refer to the proper section within this chapter.**

ACC will allow you to keep cruise control engaged in light to moderate traffic conditions without the constant need to reset your cruise control. ACC utilizes a radar sensor and a forward facing camera designed to detect a vehicle directly ahead of you.

NOTE:

- If the sensor does not detect a vehicle ahead of you, ACC will maintain a fixed set speed.
- If the ACC sensor detects a vehicle ahead, ACC will apply limited braking or accelerate (not to exceed the original set speed) automatically to maintain a preset following distance, while matching the speed of the vehicle ahead.

The Cruise Control system has two control modes:

- Adaptive Cruise Control mode for maintaining an appropriate distance between vehicles.
- Normal (Fixed Speed) Cruise Control mode for cruising at a constant preset speed. For additional information, refer to "Normal (Fixed Speed) Cruise Control Mode" in this section.

NOTE:
Normal (Fixed Speed) Cruise Control will not react to preceding vehicles. Always be aware of the mode selected.

You can change the mode by using the Cruise Control buttons. The two control modes function differently. Always confirm which mode is selected.

WARNING!

- **Adaptive Cruise Control (ACC) is a convenience system. It is not a substitute for active driving involvement. It is always the driver's responsibility to be attentive of road, traffic, and weather conditions, vehicle speed, distance to the vehicle ahead; and, most importantly, brake operation to ensure safe operation of the vehicle under all road conditions. Your complete attention is always required while driving to maintain safe control of your vehicle. Failure to follow these warnings can result in a collision and death or serious personal injury.**
- **The ACC system:**
  - **Does not react to pedestrians, oncoming vehicles, and stationary objects (e.g., a stopped vehicle in a traffic jam or a disabled vehicle).**
  - **Cannot take street, traffic, and weather conditions into account, and may be limited upon adverse sight distance conditions.**

(Continued)

WARNING! *(Continued)*

- **Does not always fully recognize complex driving conditions, which can result in wrong or missing distance warnings.**
- **On vehicles with automatic transmission, will bring the vehicle to a complete stop while following a target vehicle and hold the vehicle for 2 seconds in the stop position. If the target vehicle does not start moving within two seconds the ACC system will display a message that the system will release the brakes and that the brakes must be applied manually. An audible chime will sound when the brakes are released.**

- **You should switch off the ACC system:**
  - **When driving in fog, heavy rain, heavy snow, sleet, heavy traffic, and complex driving situations (i.e., in highway construction zones).**
  - **When entering a turn lane or highway off ramp; when driving on roads that are winding, icy, snow-covered, slippery, or have steep uphill or downhill slopes.**
  - **When towing a trailer up or down steep slopes.**

(Continued)

WARNING! *(Continued)*

- **When circumstances do not allow safe driving at a constant speed.**

Adaptive Cruise Control (ACC) Operation

The Speed Control buttons (located on the right side of the steering wheel) operate the ACC system.

NOTE:
Any chassis/suspension or tire size modifications to the vehicle will affect the performance of the Adaptive Cruise Control and Forward Collision Warning System.

Activating Adaptive Cruise Control (ACC)

You can only engage ACC if the vehicle speed is above 0 mph (0 km/h).

The minimum set speed for the ACC system is 20 mph (32 km/h).

When the system is turned on and in the ready state, the instrument cluster displays “ACC Ready.”

When the system is off, the instrument cluster displays “Adaptive Cruise Control (ACC) Off.”

NOTE:
You cannot engage ACC under the following conditions:

- When in Four-Wheel Drive Low
- When you apply the brakes
- When the parking brake is applied
- When the automatic transmission is in PARK, REVERSE or NEUTRAL
- When the manual transmission is in first gear
- When the vehicle speed is below 20 mph (32 km/h) (manual transmission)
- When the vehicle speed is outside of the speed range
- When the brakes are overheated
- When the driver's door is open at low speeds
- When the driver's seat belt is unbuckled at low speeds
- ESC Full-Off Mode is active

To Activate/Deactivate

Push and release the Adaptive Cruise Control (ACC) on/off button. The ACC menu in the instrument cluster displays "ACC Ready."

Adaptive Cruise Control Ready

To turn the system off, push and release the Adaptive Cruise Control (ACC) on/off button again. At this time, the system will turn off and the instrument cluster displays "Adaptive Cruise Control (ACC) Off."

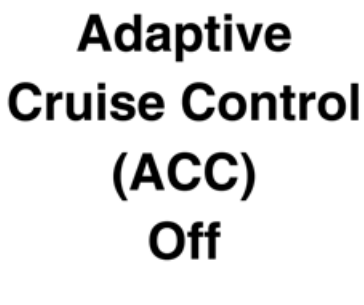

Adaptive Cruise Control Off

WARNING!
Leaving the Adaptive Cruise Control (ACC) system on when not in use is dangerous. You could accidentally set the system or cause it to go faster than you want. You could lose control and have a collision. Always leave the system off when you are not using it.

To Set A Desired ACC Speed

When the vehicle reaches the speed desired, push the SET **(+)** button or the SET **(-)** button and release. The instrument cluster display will display the set speed.

If the system is set when the vehicle speed is below 20 mph (32 km/h), the set speed shall be defaulted to 20 mph (32 km/h). If the system is set when the vehicle speed is above 20 mph (32 km/h), the set speed shall be the current speed of the vehicle. On vehicles equipped with a manual transmission, the system cannot be set when the vehicle speed is below 20 mph (32 km/h) or when the vehicle is in first gear.

NOTE:
ACC cannot be set if there is a stationary vehicle in front of your vehicle in close proximity.

Remove your foot from the accelerator pedal. If you do not, the vehicle may continue to accelerate beyond the set speed. If this occurs:

- The message "DRIVER OVERRIDE" will display in the instrument cluster display.
- The system will not be controlling the distance between your vehicle and the vehicle ahead. The vehicle speed will

only be determined by the position of the accelerator pedal.

To Cancel

The following conditions cancel the system:

- The brake pedal is applied
- The CANC button is pushed
- An Anti-Lock Brake System (ABS) event occurs
- The gear selector is removed from the DRIVE position
- The Electronic Stability Control/Traction Control System (ESC/TCS) activates
- The vehicle parking brake is applied
- Driver seatbelt is unbuckled at low speeds
- Driver door is opened at low speeds
- The braking temperature exceeds normal range (overheated)
- A Trailer Sway Control (TSC) event occurs
- The vehicle speed is less than 15 mph (24 km/h) (manual transmission only)
- The clutch is depressed for more than 10 seconds (manual transmission only)
- The vehicle is placed in NEUTRAL for more than ten seconds (manual transmission only)
- The driver shifts to 1st gear (manual transmission only)

To Turn Off

The system will turn off and clear the set speed in memory if:

- The Adaptive Cruise Control (ACC) on/off button is pushed
- The Normal (Fixed Speed) Cruise Control on/off button is pushed
- The ignition is turned OFF
- You switch to Four-Wheel Drive Low

To Resume

If there is a set speed in memory push the RES (resume) button and then remove your foot from the accelerator pedal. The instrument cluster display will display the last set speed.

NOTE:

- If your vehicle stays at standstill for longer than two seconds, then the system will cancel and the brake force will be ramped-out. The driver will have to apply the brakes to keep the vehicle at a standstill.

- ACC cannot be resumed if there is a stationary vehicle in-front of your vehicle in close proximity.

WARNING!
The Resume function should only be used if traffic and road conditions permit. Resuming a set speed that is too high or too low for prevailing traffic and road conditions could cause the vehicle to accelerate or decelerate too sharply for safe operation. Failure to follow these warnings can result in a collision and death or serious personal injury.

To Vary The Speed Setting

To Increase Speed

While ACC is set, you can increase the set speed by pushing the SET **(+)** button.

The driver's preferred units can be selected through the instrument panel settings. Refer to "Getting To Know Your Instrument Panel" for more information. The speed increment shown is dependant on the chosen speed unit of U.S. (mph) or Metric (km/h):

U.S. Speed (mph)

- Pushing the SET **(+)** button once will result in a 1 mph increase in set speed. Each subsequent tap of the button results in an increase of 1 mph.
- If the button is continually pushed, the set speed will continue to increase in 5 mph increments until the button is released. The increase in set speed is reflected in the instrument cluster display.

Metric Speed (km/h)

- Pushing the SET **(+)** button once will result in a 1 km/h increase in set speed. Each subsequent tap of the button results in an increase of 1 km/h.
- If the button is continually pushed, the set speed will continue to increase in 10 km/h increments until the button is released. The increase in set speed is reflected in the instrument cluster display.

To Decrease Speed

While ACC is set, the set speed can be decreased by pushing the SET **(-)** button.

The driver's preferred units can be selected through the instrument panel settings. Refer to "Getting To Know Your Instrument Panel" for more information. The speed decrement shown is dependant on the chosen speed unit of U.S. (mph) or Metric (km/h):

U.S. Speed (mph)

- Pushing the SET **(-)** button once will result in a 1 mph decrease in set speed. Each subsequent tap of the button results in a decrease of 1 mph.
- If the button is continually pushed, the set speed will continue to decrease in 5 mph decrements until the button is released. The decrease in set speed is reflected in the instrument cluster display.

Metric Speed (km/h)

- Pushing the SET **(-)** button once will result in a 1 km/h decrease in set speed. Each subsequent tap of the button results in a decrease of 1 km/h.
- If the button is continually pushed, the set speed will continue to decrease in 10 km/h decrements until the button is released. The decrease in set speed is reflected in the instrument cluster display.

NOTE:

- When you override and push the SET (+) button or SET (-) button, the new set speed will be the current speed of the vehicle.
- When you use the SET (-) button to decelerate, if the engine's braking power does not slow the vehicle sufficiently to reach the set speed, the brake system will automatically slow the vehicle.
- The ACC system applies the brake down to a full stop when following a target vehicle. If an ACC host vehicle follows a target vehicle to a standstill, the host vehicle will release the vehicle brakes two seconds after coming to a full stop.
- The ACC system maintains set speed when driving up hill and down hill. However, a slight speed change on moderate hills is normal. In addition, downshifting may occur while climbing uphill or descending downhill. This is normal operation and necessary to maintain set speed. When driving up hill and down hill, the ACC system will cancel if the braking temperature exceeds normal range (overheated).

Setting The Following Distance In ACC

The specified following distance for ACC can be set by varying the distance setting between four bars (longest), three bars (long), two bars (medium) and one bar (short). Using this distance setting and the vehicle speed, ACC calculates and sets the distance to the vehicle ahead. This distance setting displays in the instrument cluster display.

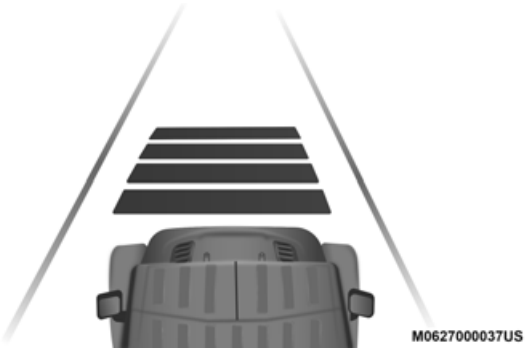

Distance Setting 4 Bars (Longest)

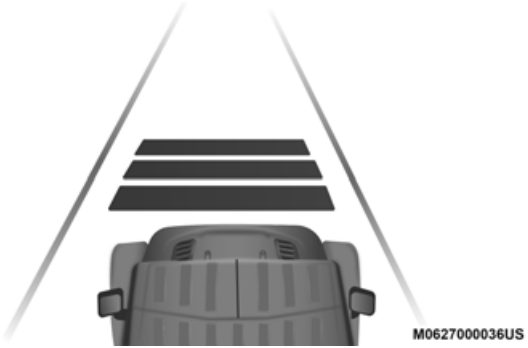

Distance Setting 3 Bars (Long)

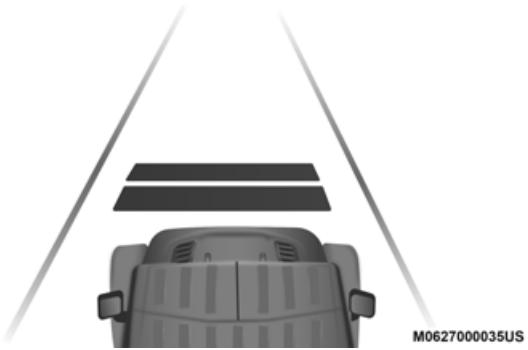

Distance Setting 2 Bars (Medium)

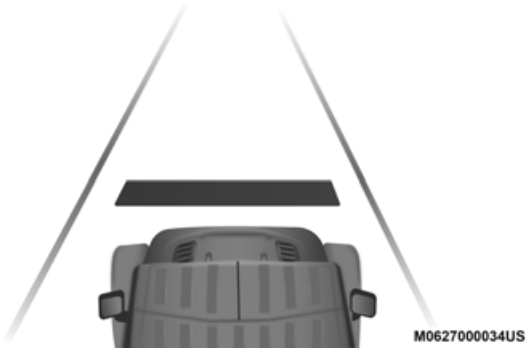

Distance Setting 1 Bar (Short)

To increase the distance setting, push the Distance Setting — Increase button and release. Each time the button is pushed, the distance setting increases by one bar (longer).

To decrease the distance setting, push the Distance Setting — Decrease button and release. Each time the button is pushed, the distance setting decreases by one bar (shorter).

If there is no vehicle ahead, the vehicle will maintain the set speed. If a slower moving vehicle is detected in the same lane, the instrument cluster displays the "Sensed Vehicle Indicator" icon, and the system adjusts vehicle speed automatically to maintain the distance setting, regardless of the set speed.

The vehicle will then maintain the set distance until:

- The vehicle ahead accelerates to a speed above the set speed
- The vehicle ahead moves out of your lane or view of the sensor
- The distance setting is changed
- The system disengages (Refer to the information on ACC Activation)

The maximum braking applied by ACC is limited; however, the driver can always apply the brakes manually, if necessary.

NOTE:
The brake lights will illuminate whenever the ACC system applies the brakes.

A Proximity Warning will alert the driver if ACC predicts that its maximum braking level is not sufficient to maintain the set distance. If this occurs, a visual alert "BRAKE!" will flash in the instrument cluster display and a chime will sound while ACC continues to apply its maximum braking capacity.

M0627000008US

Brake Alert

NOTE:
The "BRAKE!" screen in the instrument cluster display is a warning for the driver to take action and does not necessarily mean that the Forward Collision Warning system is applying the brakes autonomously.

Overtake Aid

When driving with ACC engaged and following a vehicle, the system will provide an additional acceleration up to the ACC set speed to assist in passing the vehicle. This additional acceleration is triggered when the driver utilizes the left turn signal and will only be active when passing on the left hand side.

ACC Operation At A Stop (Automatic Transmission Only)

In the event that the ACC system brings your vehicle to a standstill while following a target vehicle, your vehicle will resume motion without the need for any driver action if the target vehicle starts moving within two seconds of your vehicle coming to a standstill.

If the target vehicle does not start moving within two seconds of your vehicle coming to a standstill, the ACC with Stop system will cancel and the brakes will release. A cancel message will display on the instrument cluster display and produce a warning chime. Driver intervention will be required at this moment.

While ACC with Stop is holding your vehicle at a standstill, if the driver seatbelt is unbuckled or the driver door is opened, the ACC with Stop system will cancel and the brakes will release. A cancel message will display on the instrument cluster display and produce a warning chime. Driver intervention will be required at this moment.

WARNING!
When the ACC system is resumed, the driver must ensure that there are no pedestrians, vehicles or objects in the path of the vehicle. Failure to follow these warnings can result in a collision and death or serious personal injury.

Adaptive Cruise Control (ACC) Menu

The instrument cluster display will show the current ACC system settings. The instrument cluster display is located in the center of the instrument cluster. The information it displays depends on ACC system status.

Push the Adaptive Cruise Control (ACC) on/off button (located on the steering wheel) until one of the following appears in the instrument cluster display:

Adaptive Cruise Control Off

When ACC is deactivated, the display will read "Adaptive Cruise Control Off."

Adaptive Cruise Control Ready

When ACC is activated, but the vehicle speed setting has not been selected, the display will read "Adaptive Cruise Control Ready."

Adaptive Cruise Control Set

When the SET (+) or the SET (-) button (located on the steering wheel) is pushed, the display will read "ACC SET."

When ACC is set, the set speed will show in the instrument cluster display.

The ACC screen may display once again if any ACC activity occurs, which may include any of the following:

- System Cancel
- Driver Override
- System Off
- ACC Proximity Warning
- ACC Unavailable Warning

The instrument cluster display will return to the last display selected after five seconds of no ACC display activity.

Display Warnings And Maintenance

"Wipe Front Radar Sensor In Front Of Vehicle" Warning

The "ACC/FCW Unavailable Wipe Front Radar Sensor" warning will display and also a chime will indicate when conditions temporarily limit system performance.

This most often occurs at times of poor visibility, such as in snow or heavy rain. The ACC system may also become temporarily blinded due to obstructions, such as mud, dirt or ice. In these cases, the instrument cluster display will display "ACC/FCW Unavailable Wipe Front Radar Sensor" and the system will deactivate.

The "ACC/FCW Unavailable Wipe Front Radar Sensor" message can sometimes be displayed while driving in highly reflective areas (i.e. tunnels with reflective tiles, or ice and snow). The ACC system will recover after the vehicle has left these areas. Under rare conditions, when the radar is not tracking any vehicles or objects in its path this warning may temporarily occur.

NOTE:
If the "ACC/FCW Unavailable Wipe Front Radar Sensor" warning is active Normal (Fixed Speed) Cruise Control is still available. For additional information refer to "Normal (Fixed Speed) Cruise Control Mode" in this section.

If weather conditions are not a factor, the driver should examine the sensor. It may require cleaning or removal of an obstruction. The sensor is located in the center of the vehicle behind the lower grille.

To keep the ACC System operating properly, it is important to note the following maintenance items:

- Always keep the sensor clean. Carefully wipe the sensor lens with a soft cloth. Be cautious not to damage the sensor lens.
- Do not remove any screws from the sensor. Doing so could cause an ACC system malfunction or failure and require a sensor realignment.
- If the sensor or front end of the vehicle is damaged due to a collision, see your authorized dealer for service.
- Do not attach or install any accessories near the sensor, including transparent material or aftermarket grilles. Doing so could cause an ACC system failure or malfunction.

When the condition that deactivated the system is no longer present, the system will return to the "Adaptive Cruise Control Off" state and will resume function by simply reactivating it.

NOTE:

- If the "ACC/FCW Unavailable Wipe Front Radar Sensor" message occurs frequently (e.g. more than once on every trip) without any snow, rain, mud, or other obstruction, have the radar sensor realigned at your authorized dealer.
- Installing a snow plow, front-end protector, an after-market grille or modifying the grille is not recommended. Doing so may block the sensor and inhibit ACC/FCW operation.

"Clean Front Windshield" Warning

The "ACC/FCW Limited Functionality Clean Front Windshield" warning will display and also a chime will indicate when conditions temporarily limit system performance. This most often occurs at times of poor visibility, such as in snow or heavy rain and fog. The ACC system may also become temporarily blinded due to obstructions, such as mud, dirt, or ice on windshield and fog on the inside of glass. In these cases, the instrument cluster display will display "ACC/FCW Limited Functionality Clean Front Windshield" and the system will have degraded performance.

The "ACC/FCW Limited Functionality Clean Front Windshield" message can sometimes be displayed while driving in adverse weather conditions. The ACC/FCW system will recover after the vehicle has left these areas. Under rare conditions, when the camera is not tracking any vehicles or objects in its path this warning may temporarily occur.

If weather conditions are not a factor, the driver should examine the windshield and the camera located on the back side of the inside rear view mirror. They may require cleaning or removal of an obstruction.

When the condition that created limited functionality is no longer present, the system will return to full functionality.

NOTE:
If the "ACC/FCW Limited Functionality Clean Front Windshield" message occurs frequently (e.g. more than once on every trip) without any snow, rain, mud, or other obstruction, have the windshield and forward facing camera inspected at your authorized dealer.

"Service ACC/FCW" Warning

If the system turns off, and the instrument cluster displays "ACC/FCW Unavailable Service Required" or "Cruise/FCW Unavailable Service Required", there may be an internal system fault or a temporary malfunction that limits ACC functionality. Although the vehicle is still drivable under normal conditions, ACC will be temporarily unavailable. If this occurs, try activating ACC again later, following an ignition cycle. If the problem persists, see your authorized dealer.

Precautions While Driving With ACC

In certain driving situations, ACC may have detection issues. In these cases, ACC may brake late or unexpectedly. The driver needs to stay alert and may need to intervene.

NOTE:

- Do not put stickers or easy passes over the camera/radar field of view.
- Cracks in the windshield may affect the performance of ACC, depending on the size and location of the crack.

Towing A Trailer

Towing a trailer is not advised when using ACC.

Offset Driving

ACC may not detect a vehicle in the same lane that is offset from your direct line of travel, or a vehicle merging in from a side lane. There may not be sufficient distance to the vehicle ahead. The offset vehicle may move in and out of the line of travel, which can cause your vehicle to brake or accelerate unexpectedly.

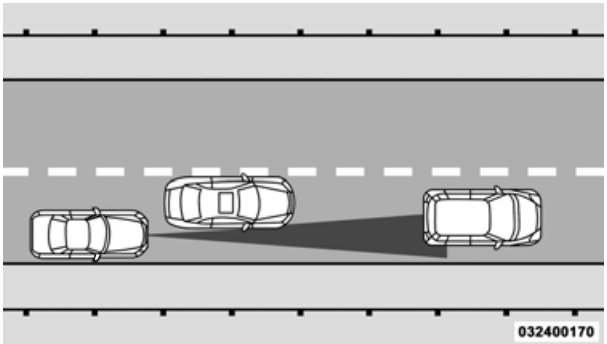

Offset Driving Condition Example

Turns And Bends

When driving on a curve with ACC engaged, the system may decrease the vehicle speed and acceleration for stability reasons, with no target vehicle detected. Once the vehicle is out of the curve the system will resume your original set speed. This is a part of normal ACC system functionality.

NOTE:
On tight turns ACC performance may be limited.

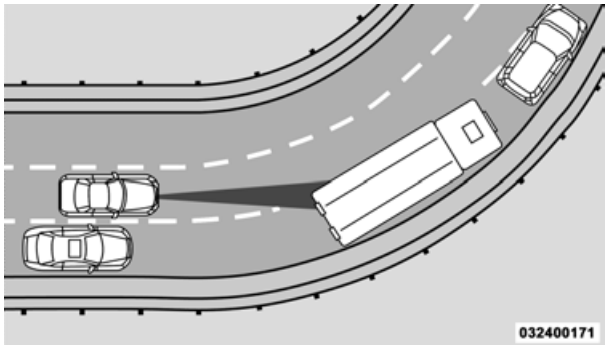

Turn Or Bend Example

Using ACC On Hills

When driving on hills, ACC may not detect a vehicle in your lane. Depending on the speed, vehicle load, traffic conditions, and the steepness of the hills, ACC performance may be limited.

ACC Hill Example

Lane Changing

ACC may not detect a vehicle until it is completely in the lane in which you are traveling. In the illustration shown, ACC has not yet detected the vehicle changing lanes and it may not detect the vehicle until it's too late for the ACC system to take action. There may not be sufficient distance to the lane-changing vehicle. Always be attentive and ready to apply the brakes if necessary.

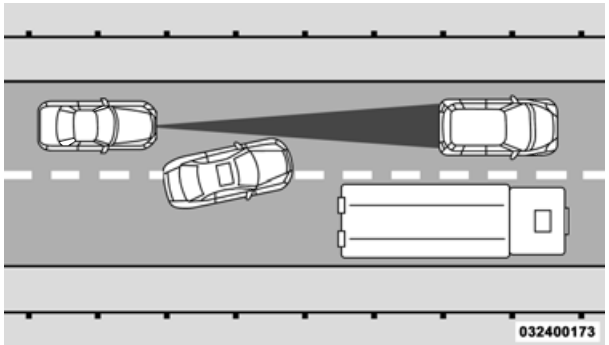

Lane Changing Example

Narrow Vehicles

Some narrow vehicles traveling near the outer edges of the lane or edging into the lane are not detected until they have moved fully into the lane. There may not be sufficient distance to the vehicle ahead.

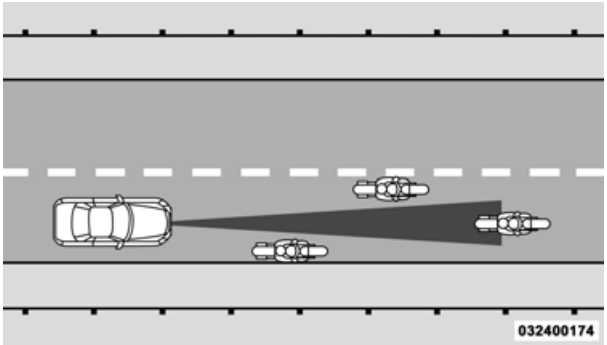

Narrow Vehicle Example

Stationary Objects And Vehicles

ACC does not react to stationary objects and stationary vehicles. For example, ACC will not react in situations where the vehicle you are following exits your lane and the vehicle ahead is stopped in your lane. Always be attentive and ready to apply the brakes if necessary.

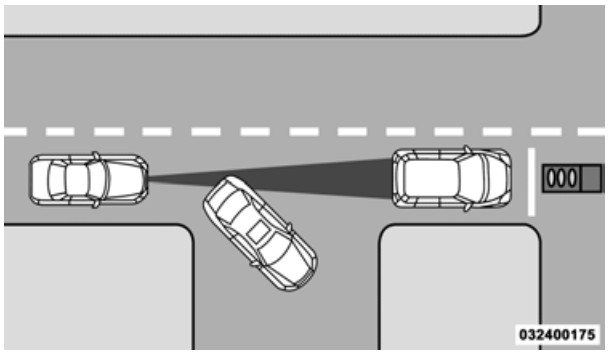

Stationary Object And Stationary Vehicle Example

General Information

The following regulatory statement applies to all Radio Frequency (RF) devices equipped in this vehicle:

This device complies with Part 15 of the FCC Rules and with Innovation, Science and Economic Development Canada license-exempt RSS standard(s). Operation is subject to the following two conditions:

1. This device may not cause harmful interference, and
2. This device must accept any interference received, including interference that may cause undesired operation.

Le présent appareil est conforme aux CNR d`Innovation, Science and Economic Development applicables aux appareils radio exempts de licence. L'exploitation est autorisée aux deux conditions suivantes:

1. l'appareil ne doit pas produire de brouillage, et
2. l'utilisateur de l'appareil doit accepter tout brouillage radioélectrique subi, même si le brouillage est susceptible d'en compromettre le fonctionnement.

La operación de este equipo está sujeta a las siguientes dos condiciones:

1. es posible que este equipo o dispositivo no cause interferencia perjudicial y
2. este equipo o dispositivo debe aceptar cualquier interferencia, incluyendo la que pueda causar su operación no deseada.

NOTE:
Changes or modifications not expressly approved by the party responsible for compliance could void the user's authority to operate the equipment.

Normal (Fixed Speed) Cruise Control Mode

In addition to Adaptive Cruise Control mode, a Normal (Fixed Speed) Cruise Control mode is available for cruising at fixed speeds. The Normal (Fixed Speed) Cruise Control mode is designed to maintain a set cruising speed without requiring the driver to operate the accelerator. Cruise Control can only be operated if the vehicle speed is above 20 mph (32 km/h).

To change between the different control modes, push the Adaptive Cruise Control (ACC) on/off button which turns the ACC and the Normal (Fixed Speed) Cruise Control off. Pushing the Normal (Fixed Speed) Cruise Control on/off button will result in turning on (changing to) the Normal (Fixed Speed) Cruise Control mode.

WARNING!
In the Normal (Fixed Speed) Cruise Control mode, the system will not react to vehicles ahead. In addition, the proximity warning does not activate and no alarm will sound even if you are too close to the vehicle ahead since neither the presence of the vehicle ahead nor the vehicle-to-vehicle distance is detected. Be sure to maintain a safe distance between your vehicle and the vehicle ahead. Always be aware which mode is selected.

To Set A Desired Speed

Turn the Normal (Fixed Speed) Cruise Control on. When the vehicle has reached the desired speed, push the SET (+) or SET (-) button and release. Release the accelerator and the vehicle will operate at the selected speed. Once a speed has been set a message "CRUISE CONTROL SET TO MPH (km/h)" will appear indicating what speed was set. This light will turn on when the system is turned on via the on/off control. It turns green when the cruise control is set.

To Vary The Speed Setting

To Increase Speed

When the Normal (Fixed Speed) Cruise Control is set, you can increase speed by pushing the SET **(+)** button.

The driver's preferred units can be selected through the instrument cluster display. Refer to "Getting To Know Your Instrument Panel" for more information. The speed increment shown is dependant on the speed of U.S. (mph) or Metric (km/h) units:

U.S. Speed (mph)

- Pushing the SET **(+)** button once will result in a 1 mph increase in set speed. Each subsequent tap of the button results in an increase of 1 mph.
- If the button is continually pushed, the set speed will continue to increase in 5 mph increments until the button is released. The increase in set speed is reflected in the instrument cluster display.

Metric Speed (km/h)

- Pushing the SET **(+)** button once will result in a 1 km/h increase in set speed. Each subsequent tap of the button results in an increase of 1 km/h.
- If the button is continually pushed, the set speed will continue to increase in 10 km/h increments until the button is released. The increase in set speed is reflected in the instrument cluster display.

To Decrease Speed

When the Normal (Fixed Speed) Cruise Control is set, you can decrease speed by pushing the SET **(-)** button.

The driver's preferred units can be selected through the instrument cluster display. Refer to "Getting To Know Your Instrument Panel" for more information. The speed decrement shown is dependant on the speed of U.S. (mph) or Metric (km/h) units:

U.S. Speed (mph)

- Pushing the SET **(-)** button once will result in a 1 mph decrease in set speed. Each subsequent tap of the button results in a decrease of 1 mph.
- If the button is continually pushed, the set speed will continue to decrease in 5 mph decrements until the button is released. The decrease in set speed is reflected in the instrument cluster display.

Metric Speed (km/h)

- Pushing the SET **(-)** button once will result in a 1 km/h decrease in set speed. Each subsequent tap of the button results in a decrease of 1 km/h.
- If the button is continually pushed, the set speed will continue to decrease in 10 km/h decrements until the button is released. The decrease in set speed is reflected in the instrument cluster display.

To Cancel

The following conditions will cancel the Normal (Fixed Speed) Cruise Control without clearing the memory:

- The brake pedal is applied.
- The CANC button is pushed.
- The Electronic Stability Control/Traction Control System (ESC/TCS) activates.
- The vehicle parking brake is applied.
- The braking temperature exceeds normal range (overheated).
- The gear selector is removed from the DRIVE position.
- The driver switches ESC to full-off mode.
- The driver shifts to 1st gear (manual transmission only).
- The vehicle speed is less than 15 mph (24 km/h) (manual transmission only).
- The clutch is depressed for more than ten seconds (manual transmission only).
- The vehicle is placed in NEUTRAL for more than ten seconds (manual transmission only).

To Resume Speed

To resume a previously set speed, push the RES button and release. Resume can be used at any speed above 20 mph (32 km/h).

To Turn Off

The system will turn off and erase the set speed in memory if:

- The Normal (Fixed Speed) Cruise Control on/off button is pushed
- The ignition is cycled OFF
- Four-Wheel Drive Low is engaged
- The Adaptive Cruise Control (ACC) on/off button is pushed

PARKSENSE REAR PARK ASSIST — IF EQUIPPED

The ParkSense Rear Park Assist system provides visual and audible indications of the distance between the rear fascia and a detected obstacle when backing up, e.g. during a parking maneuver. Refer to “ParkSense System Usage Precautions” in this section for limitations of this system and recommendations.

ParkSense will retain the last system state (enabled or disabled) from the last ignition cycle when the ignition is cycled to the ON/RUN position.

ParkSense can be active only when the gear selector is in REVERSE. If ParkSense is enabled at this gear selector position, the system will remain active until the vehicle speed is increased to approximately 7 mph (11 km/h) or above. When in REVERSE and above the system's operating speed, a warning will appear within the instrument cluster display indicating the vehicle speed is too fast. The system will become active again if the vehicle speed is decreased to speeds less than approximately 6 mph (9 km/h).

ParkSense Sensors

The four ParkSense sensors, located in the rear fascia/bumper, monitor the area behind the vehicle that is within the sensors’ field of view. The sensors can detect obstacles from approximately 12 inches (30 cm) up to 79 inches (200 cm) from the rear fascia/bumper in the horizontal direction, depending on the location, type and orientation of the obstacle.

ParkSense Warning Display

The ParkSense Warning screen will only be displayed if “Sound and Display” is selected from the Customer - Programmable Features section of the Uconnect System. Refer to "Uconnect Settings” in “Multimedia” for further information.

The ParkSense Warning screen is located within the instrument cluster display. It provides visual warnings to indicate the distance between the rear fascia/bumper and the detected obstacle. Refer to “Instrument Cluster Display” in “Getting To Know Your Instrument Panel” for further information.

ParkSense Display

When the vehicle is in REVERSE, the instrument cluster display will show the park assist ready system status.

The system will indicate a detected obstacle by showing a single arc in one or more regions based on the obstacle’s distance and location relative to the vehicle.

If an obstacle is detected in the center rear region, the display will show a single solid arc in the center rear region and will produce a one-half second tone. As the vehicle moves closer to the obstacle, the display will show the single arc moving closer to the vehicle and the sound tone will change from slow, to fast, to continuous.

If an obstacle is detected in the left and/or right rear region, the display will show a single flashing arc in the left and/or right rear region and will produce a fast sound tone. As the vehicle moves closer to the obstacle, the display will show the single arc moving closer to the vehicle and the tone will change from fast to continuous.

M0628000043US

Single 1/2 Second Tone/Solid Arc

M0628000044US

Slow Tone/Solid Arc

M0628000045US

Slow Tone/Solid Arc

M0628000046US

Fast Tone/Flashing Arc

M0628000047US

Continuous Tone/Flashing Arc

The vehicle is close to the obstacle when the warning display shows one flashing arc and sounds a continuous tone. The following chart shows the warning alert operation when the system is detecting an obstacle:

WARNING ALERTS							
Rear Distance (inches/cm)	Greater than 79 inches (200 cm)	79-59 inches (200-150 cm)	59-47 inches (150-120 cm)	47-39 inches (120-100 cm)	39-25 inches (100-65 cm)	25-12 inches (65-30 cm)	Less than 12 inches (30 cm)
Arcs — Left	None	None	None	None	None	2nd Flashing	1st Flashing
Arcs — Center	None	6th Solid	5th Solid	4th Solid	3rd Flashing	2nd Flashing	1st Flashing

WARNING ALERTS							
Arcs — Right	None	None	None	None	None	2nd Flashing	1st Flashing
Audible Alert Chime	None	Single 1/2-Second Tone (for rear center only)	Slow (for rear center only)	Slow (for rear center only)	Fast (for rear center only)	Fast	Continuous
Radio Volume Reduced	No	Yes	Yes	Yes	Yes	Yes	Yes

NOTE:
ParkSense will reduce the volume of the radio, if on, when the system is sounding an audio tone.

Enabling And Disabling ParkSense

ParkSense can be enabled and disabled with the ParkSense switch, located on the switch panel below the climate controls.

ParkSense Switch

When the ParkSense switch is pushed to disable the system, the instrument cluster display will show the “PARKSENSE OFF” message for approximately five seconds. Refer to “Instrument Cluster Display” in “Getting To Know Your Instrument Panel” for further information. When the gear selector is moved to REVERSE and the system is disabled, the instrument cluster display will show the “PARKSENSE OFF” message for as long as the vehicle is in REVERSE (Not in 4L).

The ParkSense switch LED will be on when ParkSense is disabled or requires service. The ParkSense switch LED will be off when the system is enabled. If the ParkSense switch is pushed, and requires service, the ParkSense switch LED will blink momentarily, and then the LED will be on.

Service The ParkSense Rear Park Assist System

During vehicle start up, when the ParkSense Rear Park Assist System has detected a faulted condition, the instrument cluster display will actuate a single chime, once per ignition cycle, and it will display the “PARKSENSE UNAVAILABLE WIPE REAR SENSORS” or the “PARKSENSE UNAVAILABLE SERVICE REQUIRED” message. Refer to “Instrument Cluster Display”. When the gear selector is moved to REVERSE and the system has detected a faulted condition, the instrument cluster display will show the "PARKSENSE UNAVAILABLE WIPE REAR SENSORS" or "PARKSENSE UNAVAILABLE SERVICE REQUIRED" message for as long as the vehicle is in REVERSE. Under this condition, ParkSense will not operate.

If “PARKSENSE UNAVAILABLE WIPE REAR SENSORS” appears in the instrument cluster display, make sure the outer surface and the underside of the rear fascia/bumper is clean and clear of snow, ice, mud, dirt or other obstruction and then cycle the ignition. If the message continues to appear, see an authorized dealer.

If “PARKSENSE UNAVAILABLE SERVICE REQUIRED” appears in the instrument cluster display, see an authorized dealer.

Cleaning The ParkSense System

Clean the Rear Park Assist sensors with water, car wash soap and a soft cloth. Do not use rough or hard cloths. In washing stations, clean sensors quickly keeping the vapor jet/high pressure washing nozzles at least 4 inches (10 cm) from the sensors. Do not scratch or poke the sensors. Otherwise, you could damage the sensors.

ParkSense System Usage Precautions

NOTE:

- Ensure that the rear bumper is free of snow, ice, mud, dirt and debris to keep the ParkSense system operating properly.
- Jackhammers, large trucks, and other vibrations could affect the performance of ParkSense.
- When you turn ParkSense OFF, the instrument cluster display will read "PARKSENSE OFF." Furthermore, once you turn ParkSense OFF, it remains off until you turn it on again, even if you cycle the ignition.
- ParkSense, when on, will reduce the volume of the radio when it is sounding a tone.
- Clean the ParkSense sensors regularly, taking care not to scratch or damage them. The sensors must not be covered with ice, snow, slush, mud, dirt or debris. Failure to do so can result in the system not working properly. The ParkSense system might not detect an obstacle behind the fascia/bumper, or it could provide a false indication that an obstacle is behind the fascia/bumper.
- Use the ParkSense switch to turn the ParkSense system OFF if objects such as bicycle carriers, trailer hitches, etc. are placed within 12 inches (30 cm) from the rear fascia/bumper. Failure to do so can result in the system misinterpreting a close object as a sensor problem, causing the "PARKSENSE UNAVAILABLE SERVICE REQUIRED" message to be displayed in the instrument cluster display.

WARNING!

- **Drivers must be careful when backing up even when using ParkSense. Always check carefully behind your vehicle, look behind you, and be sure to check for pedestrians, animals, other vehicles, obstructions, and blind spots before backing up. You are responsible for safety and must continue to pay attention to your surroundings. Failure to do so can result in serious injury or death.**
- **Before using ParkSense, it is strongly recommended that the ball mount and hitch ball assembly is disconnected from the vehicle when the vehicle is not used for towing. Failure to do so can result in injury or damage to vehicles or obstacles because the hitch ball will be much closer to the obstacle than the rear fascia when the loudspeaker sounds the continuous tone. Also, the sensors could detect the ball mount and hitch ball assembly, depending on its size and shape, giving a false indication that an obstacle is behind the vehicle.**

CAUTION!

- **ParkSense is only a parking aid and it is unable to recognize every obstacle, including small obstacles. Parking curbs might be temporarily detected or not detected at all. Obstacles located above or below the sensors will not be detected when they are in close proximity.**
- **The vehicle must be driven slowly when using ParkSense in order to be able to stop in time when an obstacle is detected. It is recommended that the driver looks over his/her shoulder when using ParkSense.**

PARKSENSE FRONT AND REAR PARK ASSIST — IF EQUIPPED

The ParkSense Front & Rear Park Assist system provides visual and audible indications of the distance between the rear and/or front fascia and a detected obstacle when backing up or moving forward, e.g. during a parking maneuver. Refer to "ParkSense System Usage Precautions" in this section for limitations of this system and recommendations.

ParkSense will retain the last system state (enabled or disabled) from the last ignition cycle when the ignition is cycled to the ON/RUN position.

ParkSense can be active only when the gear selector is in REVERSE or DRIVE. If ParkSense is enabled at one of these gear selector positions, the system will remain active until the vehicle speed is increased to approximately 7 mph (11 km/h) or above. A warning will appear in the instrument cluster display indicating the vehicle is above ParkSense operating speed. The system will become active again if the vehicle speed is decreased to speeds less than approximately 6 mph (9 km/h).

ParkSense Sensors

The four ParkSense sensors, located in the rear fascia/bumper, monitor the area behind the vehicle that is within the sensors' field of view. The sensors can detect obstacles from approximately 12 inches (30 cm) up to 79 inches (200 cm) from the rear fascia/bumper in the horizontal direction, depending on the location, type and orientation of the obstacle.

The six ParkSense sensors, located in the front fascia/bumper, monitor the area in front of the vehicle that is within the sensors/ field of view. The sensors can detect obstacles from approximately 12 inches (30 cm) up to 47 inches (120 cm) from the front fascia/bumper in the horizontal direction, depending on the location, type and orientation of the obstacle.

ParkSense Warning Display

The ParkSense Warning screen will only be displayed if "Sound and Display" is selected from the Customer Programmable Features section of the Uconnect System. Refer to "Uconnect Settings" in "Multimedia" for further information.

The ParkSense Warning screen is located within the instrument cluster display. It provides visual warnings to indicate the distance between the rear fascia/bumper and/or front fascia/bumper and the detected obstacle. Refer to "Instrument Cluster Display" in "Getting To Know Your Instrument Panel" for further information.

ParkSense Display

The warning display will turn on indicating the system status when the vehicle is in REVERSE or when the vehicle is in DRIVE and an obstacle has been detected.

ParkSense
On

M0628000036US

Park Assist Ready

The system will indicate a detected obstacle by showing a single arc in one or more regions based on the obstacle's distance and location relative to the vehicle.

If an obstacle is detected in the center front region, the display will show a single solid arc in the center front region and will produce a one-half second tone. As the vehicle moves closer to the obstacle, the display will show the single arc moving closer to the vehicle and the sound tone will change from a single 1/2 second tone to slow, to fast, to continuous.

If an obstacle is detected in the left and/or right front region, the display will show a single flashing arc in the left and/or right front region and will produce a fast sound tone. As the vehicle moves closer to the obstacle, the display will show the single arc moving closer to the vehicle and the tone will change from fast to continuous.

M0629000028US

Single 1/2 Second Tone

M0629000029US

Slow Tone

M0629000030US

Fast Tone

M0629000031US

Continuous Tone

The vehicle is close to the obstacle when the display shows one flashing arc and sounds a continuous tone. The following chart shows the warning alert operation when the system is detecting an obstacle:

WARNING ALERTS FOR REAR							
Rear Distance (inches/cm)	Greater than 79 inches (200 cm)	79-59 inches (200-150 cm)	59-47 inches (150-120 cm)	47-39 inches (120-100 cm)	39-25 inches (100-65 cm)	25-12 inches (65-30 cm)	Less than 12 inches (30 cm)
Arcs — Left	None	None	None	None	None	2nd Flashing	1st Flashing
Arcs — Center	None	6th Solid	5th Solid	4th Solid	3rd Flashing	2nd Flashing	1st Flashing
Arcs — Right	None	None	None	None	None	2nd Flashing	1st Flashing

WARNING ALERTS FOR REAR							
Audible Alert Chime	None	Single 1/2-Second Tone (for rear center only)	Slow (for rear center only)	Slow (for rear center only)	Fast (for rear center only)	Fast	Continuous
Radio Volume Reduced	No	Yes	Yes	Yes	Yes	Yes	Yes

WARNING ALERTS FOR FRONT					
Front Distance (inches / cm)	Greater than 47 inches (120 cm)	47-39 inches (120-100 cm)	39-25 inches (100-65 cm)	25-12 inches (65-30 cm)	Less than 12 inches (30 cm)
Arcs — Left	None	None	None	2nd Flashing	1st Flashing
Arcs — Center	None	4th Solid	3rd Flashing	2nd Flashing	1st Flashing
Arcs — Right	None	None	None	2nd Flashing	1st Flashing
Audible Alert Chime	None	None	None	Fast	Continuous
Radio Volume Reduced	No	No	No	Yes	Yes

NOTE:
ParkSense will reduce the volume of the radio, if on, when the system is sounding an audio tone.

Front Park Assist Audible Alerts

ParkSense will turn off the Front Park Assist audible alert (chime) after approximately three seconds when an obstacle has been detected, the vehicle is stationary, and the brake pedal is applied.

Adjustable Chime Volume Settings

The Front and Rear chime volume settings are programmable.

The settings may be programmed through the Uconnect System. Refer to "Uconnect Settings" in "Multimedia" for further information.

The chime volume settings include low, medium, and high. The factory default volume setting is medium.

ParkSense will retain its last known configuration state through ignition cycles.

Enabling And Disabling ParkSense

Front ParkSense can be enabled and disabled with the Front ParkSense switch.

Rear ParkSense can be enabled and disabled with the Rear ParkSense switch.

When the Front or Rear ParkSense switch is pushed to disable the system, the instrument cluster display will show the "PARKSENSE OFF" message for approximately five seconds. Refer to "Instrument Cluster Display" in "Getting To Know Your Instrument Panel" for further information.

When the gear selector is moved to REVERSE and the Front or Rear system is disabled, the instrument cluster display will show the "PARKSENSE OFF" message for as long as the vehicle is in REVERSE.

The Front or Rear ParkSense switch LED will be on when Front or Rear ParkSense is disabled or requires service. The Front or Rear ParkSense switch LED will be off when the Front or Rear system is enabled. If the Front or Rear ParkSense switch is pushed, and the system requires service, the Front or Rear ParkSense switch LED will blink momentarily, and then the LED will be on.

Service The ParkSense Park Assist System

During vehicle start up, when the ParkSense System has detected a faulted condition, the instrument cluster will actuate a single chime, once per ignition cycle, and it will display the "PARKSENSE UNAVAILABLE WIPE REAR SENSORS", "PARKSENSE UNAVAILABLE WIPE FRONT

SENSORS" or "PARKSENSE UNAVAILABLE SERVICE REQUIRED" message. When the gear selector is moved to REVERSE and the system has detected a faulted condition, the instrument cluster display will display a "PARKSENSE UNAVAILABLE WIPE REAR SENSORS" or "PARKSENSE UNAVAILABLE SERVICE REQUIRED" message for as long as the vehicle is in REVERSE. Under this condition, ParkSense will not operate. Refer to "Instrument Cluster Display" in "Getting To Know Your Instrument Panel" for further information.

If "PARKSENSE UNAVAILABLE WIPE REAR SENSORS" or "PARKSENSE UNAVAILABLE WIPE FRONT SENSORS" appears in the instrument cluster display make sure the outer surface and the underside of the rear fascia/bumper and/or front fascia/bumper is clean and clear of snow, ice, mud, dirt or other obstruction and then cycle the ignition. If the message continues to appear, see an authorized dealer.

If the "PARKSENSE UNAVAILABLE SERVICE REQUIRED" message appears in the instrument cluster display, see an authorized dealer.

Cleaning The ParkSense System

Clean the ParkSense sensors with water, car wash soap, and a soft cloth. Do not use rough or hard cloths. In washing stations, clean sensors quickly keeping the vapor jet/high pressure washing nozzles at least 4 inches (10 cm) from the sensors. Do not scratch or poke the sensors. Otherwise, you could damage the sensors.

ParkSense System Usage Precautions

NOTE:

- Ensure that the front and rear bumpers are free of snow, ice, mud, dirt and debris to keep the ParkSense system operating properly.
- Jackhammers, large trucks, and other vibrations could affect the performance of ParkSense.
- When you turn Front or Rear ParkSense off, the instrument cluster display will show a vehicle graphic of the Front or Rear ParkSense on/off state for two seconds. Furthermore, once you turn Front or Rear ParkSense off, it remains off until you turn it on again, even if you cycle the ignition.

- When you move the gear selector to the REVERSE position and Front or Rear ParkSense is turned off, the instrument cluster display will show a vehicle graphic with "OFF" in the corresponding side. This vehicle graphic will be displayed for as long as the vehicle is in REVERSE.
- ParkSense, when on, will reduce the volume of the radio when it is sounding a tone.
- Clean the ParkSense sensors regularly, taking care not to scratch or damage them. The sensors must not be covered with ice, snow, slush, mud, dirt or debris. Failure to do so can result in the system not working properly. The ParkSense system might not detect an obstacle behind or in front of the fascia/bumper, or it could provide a false indication that an obstacle is behind or in front of the fascia/bumper.
- Use the ParkSense switch to turn the ParkSense system off if obstacles such as bicycle carriers, trailer hitches, etc. are placed within 12 inches (30 cm) from the rear fascia/bumper. Failure to do so can result in the system misinterpreting a close obstacle as a sensor problem, causing the "PARKSENSE UNAVAILABLE SERVICE REQUIRED" message to appear in the instrument cluster display.
- ParkSense should be disabled when the tailgate is in the lowered or open position. A lowered tailgate could provide a false indication that an obstacle is behind the vehicle.

WARNING!

- **Drivers must be careful when backing up even when using ParkSense. Always check carefully behind your vehicle, look behind you, and be sure to check for pedestrians, animals, other vehicles, obstructions, and blind spots before backing up. You are responsible for safety and must continue to pay attention to your surroundings. Failure to do so can result in serious injury or death.**
- **Before using ParkSense, it is strongly recommended that the ball mount and hitch ball assembly is disconnected from the vehicle when the vehicle is not used for towing. Failure to do so can result in injury or damage to vehicles or obstacles because the hitch ball will be much closer to the obstacle than the rear fascia when the loudspeaker sounds the continuous tone. Also, the sensors could detect the ball mount and hitch ball assembly, depending on its size and shape, giving a false indication that an obstacle is behind the vehicle.**

CAUTION!

- **ParkSense is only a parking aid and it is unable to recognize every obstacle, including small obstacles. Parking curbs might be temporarily detected or not detected at all. Obstacles located above or below the sensors will not be detected when they are in close proximity.**
- **The vehicle must be driven slowly when using ParkSense in order to be able to stop in time when an obstacle is detected. It is recommended that the driver looks over his/her shoulder when using ParkSense.**

PARKVIEW REAR BACK UP CAMERA

The ParkView Rear Back Up Camera allows you to see an on-screen image of the rear surroundings of your vehicle whenever the gear selector is in REVERSE. The image will be displayed in the touchscreen display along with a caution note to "check entire surroundings" across the top of the screen. After five seconds this note will disappear. The ParkView camera is located on the tailgate, above the vehicle license plate.

Manual Activation Of The Rear View Camera

1. Go to the Controls screen by pressing the "Controls" button located on the bottom of the Uconnect display, and then press "Backup Camera".
2. Press the "Backup Camera" button to turn the Rear View Camera system on.

NOTE:
For vehicles equipped with the Uconnect 3 With 5-Inch Display, there is only one option for manual activation of the Rear View Camera. Press the "More" hard button on the Uconnect system, and then press "Backup Camera".

When the vehicle is shifted out of REVERSE (with Camera delay turned off), the rear Camera mode is exited and the previous screen appears again.

When the vehicle is shifted out of REVERSE (with Camera delay turned on), the rear Camera image will be displayed for up to 10 seconds unless the vehicle speed exceeds 8 mph (13 km/h), the transmission is shifted into PARK, the ignition is cycled to the OFF position, or the touchscreen button "X" to disable display of the Rear View Camera image is pressed.

Whenever the Rear View Camera image is activated through the "Backup Camera" button in the "Controls" menu, and the vehicle speed is greater than, or equal to 8 mph (13 km/h), a display timer for the image is initiated. The image will continue to be displayed until the display timer exceeds 10 seconds.

NOTE:

- If the vehicle speed remains below 8 mph (13 km/h), the Rear View Camera image will be displayed continuously until deactivated via the touchscreen button "X", the transmission is shifted into PARK, or the ignition is cycled to the OFF position.
- The touchscreen button "X" to disable display of the camera image is made available ONLY when the vehicle is not in REVERSE.

When enabled, active guide lines are overlaid on the image to illustrate the width of the vehicle and its projected backup path based on the steering wheel position. A dashed center line overlay indicates the center of the vehicle to assist with parking or aligning to a hitch/receiver.

When enabled, fixed guide lines are overlaid on the image to illustrate the width of the vehicle.

Different colored zones indicate the distance to the rear of the vehicle.

The following table shows the approximate distances for each zone:

Zone	Distance To The Rear Of The Vehicle
Red	0 - 1 ft (0 - 30 cm)
Yellow	1 ft - 6.5 ft (30 cm - 2 m)
Green	6.5 ft or greater (2 m or greater)

Trailer Hitch Zoom

If equipped, the Trailer Hitch Zoom feature aids the driver in lining up a trailer to the vehicle's trailer hitch by allowing the driver to toggle back and forth between the normal view and a 4X zoom mode. The image is displayed on the radio screen when the transmission is shifted into REVERSE, as well as manually in certain situations through the controls screen.

WARNING!

Drivers must be careful when backing up even when using the ParkView Rear Back Up Camera. Always check carefully behind your vehicle, and be sure to check for pedestrians, animals, other vehicles, obstructions, or blind spots before backing up. You are responsible for the safety of your surroundings and must continue to pay attention while backing up. Failure to do so can result in serious injury or death.

CAUTION!

- **To avoid vehicle damage, ParkView should only be used as a parking aid. The ParkView camera is unable to view every obstacle or object in your drive path.**
- **To avoid vehicle damage, the vehicle must be driven slowly when using ParkView to be able to stop in time when an obstacle is seen. It is recommended that the driver look frequently over his/her shoulder when using ParkView.**

NOTE:
If snow, ice, mud, or any foreign substance builds up on the camera lens, clean the lens, rinse with water, and dry with a soft cloth. Do not cover the lens.

TRAILCAM SYSTEM — IF EQUIPPED

Your vehicle may be equipped with a TrailCam that allows you to you see an on-screen image of the front view of your vehicle. The image will be displayed on the touchscreen display along with a caution note “Check Entire Surroundings” across the top of the screen.

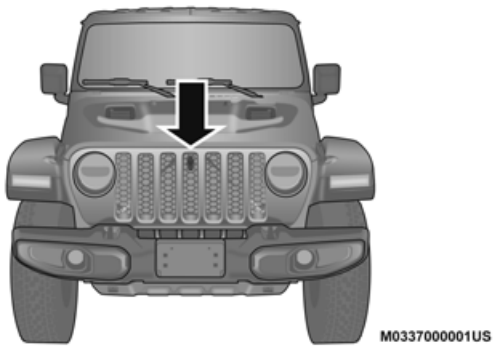

Front View Camera

NOTE:
The system will stay active while in 4L (Four-Wheel Drive Low Range).

The TrailCam System has programmable settings that may be selected through the Uconnect System. Refer to

"Uconnect Settings" in "Multimedia" for further information.

Manual Activation Of The TrailCam

TrailCam View can be activated via the below methods:

1. Press the "FWD Camera" button on the controls screen.
2. Press the "FWD Camera" button on the app menu.
3. Press the "FWD Camera" button on the Off Road Pages.
4. Auto Launch Off Road+ Setting is selected under camera settings and press the "Off Road+" button.

The TrailCam View can also be activated via "FWD Camera" button on the Backup Camera View. The Backup Camera View can also be activated via the "Backup Camera" button on the TrailCam View.

When the vehicle is shifted out of REVERSE (with Camera Delay turned off) and TrailCam View is active, the TrailCam mode is exited and the previous screen appears again.

When the vehicle is shifted out of REVERSE (with Camera Delay turned on) and the TrailCam View is active, the TrailCam image will be displayed for up to 10 seconds unless the vehicle speed exceeds 8 mph (13 km/h), the transmission is shifted into PARK, the ignition is cycled to the OFF position, or the touchscreen button "X" to disable display of the TrailCam View is pressed.

Whenever the TrailCam image is activated through the Manual Activation Methods, and the vehicle speed is greater than or equal to 8 mph (13 km/h), a display timer for the image is initiated. The image will continue to be displayed until the display timer exceeds 10 seconds.

NOTE:

- If the vehicle speed remains below 8 mph (13 km/h) while in 2WD or 4H, the TrailCam image will be displayed continuously until deactivated via the touchscreen button "X", the transmission is shifted into PARK, or the ignition is cycled to the OFF position.
- The touchscreen button "X" to disable the display of the camera image is made available ONLY when the vehicle is not in reverse.
- The TrailCam View will stay active regardless of the vehicle speed and time while in 4L (Four-Wheel Drive Low Range).

Cleaning The TrailCam

Press the "Clean Camera" soft button located on the TrailCam View to wash the TrailCam.

- The camera can be washed up to 20 seconds at a time.
- The "Clean Camera" system is not available when windshield washing is in process.

When enabled, active dynamic Tire Lines are projected on the ground plane of the TrailCam View based on the steering wheel position.

REFUELING THE VEHICLE

Fuel Filler Cap

The fuel filler cap is located on the driver's side of the vehicle. To access the fuel filler cap, push on the fuel filler door to unlatch it. To close the fuel filler door, push on it a second time. If the fuel filler cap is lost or damaged, be sure the replacement cap is the correct one for this vehicle.

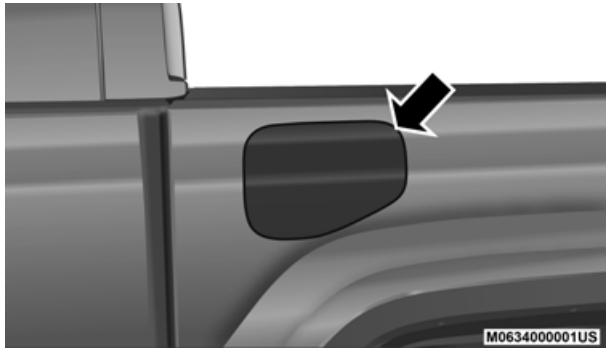

Fuel Filler Door

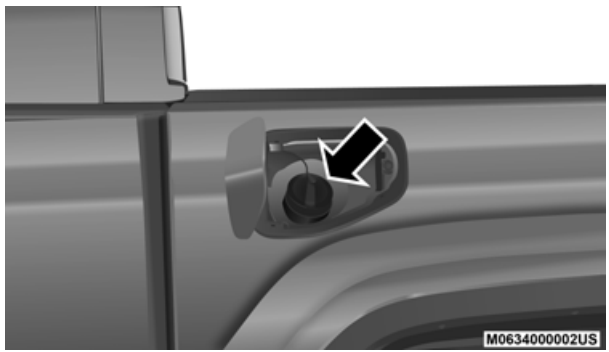

Fuel Filler Cap

WARNING!

- **Never have any smoking materials lit in or near the vehicle when the fuel door is open or the tank is being filled.**
- **Never add fuel when the engine is running. This is in violation of most state and federal fire regulations and may cause the "Malfunction Indicator Light (MIL)" to turn on.**
- **A fire may result if fuel is pumped into a portable container that is inside of a vehicle. You could be burned. Always place fuel containers on the ground while filling.**

CAUTION!

- **Damage to the fuel system or emission control system could result from using an improper fuel filler cap. A poorly fitting cap could let impurities into the fuel system. Also, a poorly fitting aftermarket cap can cause the "Malfunction Indicator Light (MIL)" to illuminate, due to fuel vapors escaping from the system.**
- **To avoid fuel spillage and overfilling, do not "top off" the fuel tank after filling.**

NOTE:

- When the fuel nozzle "clicks" or shuts off, the fuel tank is full.
- Tighten the fuel filler cap about 1/4 turn until you hear one click. This is an indication that the cap is properly tightened.
- If the fuel filler cap is not tightened properly, the MIL will come on. Be sure the cap is tightened every time the vehicle is refueled.

Loose Fuel Filler Cap Message

After fuel has been added, the vehicle diagnostic system can determine if the fuel filler cap is possibly loose, improperly installed, or damaged. If the system detects a malfunction, the "gASCAP" message will display in the odometer display. Tighten the gas cap until a "clicking" sound is heard. This is an indication that the gas cap is properly tightened. Push the odometer reset button to turn the message off. If the problem persists, the message will appear the next time the vehicle is started. This might indicate a damaged cap. If the problem is detected twice in a row, the system will turn on the MIL. Resolving the problem will turn the MIL off.

VEHICLE LOADING

Certification Label

As required by National Highway Traffic Safety Administration regulations, your vehicle has a certification label affixed to the driver's side door or pillar.

This label contains the month and year of manufacture, Gross Vehicle Weight Rating (GVWR), Gross Axle Weight Rating (GAWR) front and rear, and Vehicle Identification Number (VIN). A Month-Day-Hour (MDH) number is included on this label and indicates the Month, Day and Hour of manufacture. The bar code that appears on the bottom of the label is your VIN.

Gross Vehicle Weight Rating (GVWR)

The GVWR is the total permissible weight of your vehicle including driver, passengers, vehicle, options and cargo. The label also specifies maximum capacities of front and rear axle systems (GAWR). Total load must be limited so GVWR on front and rear GAWR are not exceeded.

Payload

The payload of a vehicle is defined as the allowable load weight a truck can carry, including the weight of the driver, all passengers, options and cargo.

Gross Axle Weight Rating (GAWR)

The GAWR is the maximum permissible load on the front and rear axles. The load must be distributed in the cargo area so that the GAWR of each axle is not exceeded.

Each axle GAWR is determined by the components in the system with the lowest load carrying capacity (axle, springs, tires or wheels). Heavier axles or suspension components sometimes specified by purchasers for increased durability does not necessarily increase the vehicle's GVWR.

Tire Size

The tire size on the Vehicle Certification Label represents the actual tire size on your vehicle. Replacement tires must be equal to the load capacity of this tire size.

Rim Size

This is the rim size that is appropriate for the tire size listed.

Inflation Pressure

This is the cold tire inflation pressure for your vehicle for all loading conditions up to full GAWR.

Curb Weight

The curb weight of a vehicle is defined as the total weight of the vehicle with all fluids, including vehicle fuel, at full capacity conditions, and with no occupants or cargo loaded into the vehicle. The front and rear curb weight values are determined by weighing your vehicle on a commercial scale before any occupants or cargo are added.

Loading

The actual total weight and the weight of the front and rear of your vehicle at the ground can best be determined by weighing it when it is loaded and ready for operation.

The entire vehicle should first be weighed on a commercial scale to ensure that the GVWR has not been exceeded. The weight on the front and rear of the vehicle should then be determined separately to be sure that the load is properly distributed over the front and rear axle. Weighing the vehicle may show that the GAWR of either the front or rear axles has been exceeded but the total load is within the specified GVWR. If so, weight must be shifted from front to rear or rear to front as appropriate until the specified weight limitations are met. Store the heavier items down low and be sure that the weight is distributed equally. Stow all loose items securely before driving.

Improper weight distributions can have an adverse effect on the way your vehicle steers and handles and the way the brakes operate.

CAUTION!
Do not load your vehicle any heavier than the GVWR or the maximum front and rear GAWR. If you do, parts on your vehicle can break, or it can change the way your vehicle handles. This could cause you to lose control. Also overloading can shorten the life of your vehicle.

TRAILER TOWING

In this section you will find safety tips and information on limits to the type of towing you can reasonably do with your vehicle. Before towing a trailer, carefully review this information to tow your load as efficiently and safely as possible.

To maintain the New Vehicle Limited Warranty coverage, follow the requirements and recommendations in this manual concerning vehicles used for trailer towing.

Common Towing Definitions

The following trailer towing related definitions will assist you in understanding the following information:

Gross Vehicle Weight Rating (GVWR)

The GVWR is the total allowable weight of your vehicle. This includes driver, passengers, cargo and tongue weight. The total load must be limited so that you do not exceed the GVWR. Refer to “Vehicle Loading/Vehicle Certification Label” in “Starting And Operating” for further information.

Gross Trailer Weight (GTW)

The GTW is the weight of the trailer plus the weight of all cargo, consumables and equipment (permanent or temporary) loaded in or on the trailer in its "loaded and ready for operation" condition.

The recommended way to measure GTW is to put your fully loaded trailer on a vehicle scale. The entire weight of the trailer must be supported by the scale.

Gross Combination Weight Rating (GCWR)

The GCWR is the total permissible weight of your vehicle and trailer when weighed in combination.

Gross Axle Weight Rating (GAWR)

The GAWR is the maximum capacity of the front and rear axles. Distribute the load over the front and rear axles evenly. Make sure that you do not exceed either front or rear GAWR. Refer to “Vehicle Loading/Vehicle Certification Label” in “Starting And Operating” for further information.

WARNING!
It is important that you do not exceed the maximum front or rear GAWR. A dangerous driving condition can result if either rating is exceeded.

Tongue Weight (TW)

The TW is the downward force exerted on the hitch ball by the trailer. You must consider this as part of the load on your vehicle.

Frontal Area

The frontal area is the maximum height multiplied by the maximum width of the front of a trailer.

Trailer Sway Control — If Equipped

The trailer sway control is a telescoping link that can be installed between the hitch receiver and the trailer tongue. It typically provides adjustable friction associated with the telescoping motion to dampen any unwanted trailer swaying motions while traveling.

Weight-Carrying Hitch

A weight-carrying hitch supports the trailer tongue weight, just as if it were luggage located at a hitch ball or some other connecting point of the vehicle. These kinds of hitches are the most popular on the market today and they are commonly used to tow small and medium sized trailers.

Weight-Distributing Hitch

A weight-distributing system works by applying leverage through spring (load) bars. They are typically used for heavier loads to distribute trailer tongue weight to the tow vehicle's front axle and the trailer axle(s). When used in accordance with the manufacturer's directions, it provides for a more level ride, offering more consistent steering and brake control thereby enhancing towing safety. The addition of a friction/hydraulic sway control also dampens sway caused by traffic and crosswinds and contributes positively to tow vehicle and trailer stability. Trailer sway control and a weight distributing (load equalizing) hitch are recommended for heavier Tongue Weights (TW) and may be required depending on vehicle and trailer configuration/loading to comply with Gross Axle Weight Rating (GAWR) requirements.

WARNING!

- **An improperly adjusted Weight Distributing Hitch system may reduce handling, stability, braking performance, and could result in a collision.**
- **Weight Distributing Systems may not be compatible with Surge Brake Couplers. Consult with your hitch and trailer manufacturer or a reputable Recreational Vehicle dealer for additional information.**

Trailer Hitch Classification

The following chart provides the industry standard for the maximum trailer weight a given trailer hitch class can tow and should be used to assist you in selecting the correct trailer hitch for your intended towing condition.

Trailer Hitch Classification Definitions	
Class	**Max. Trailer Hitch Industry Standards**
Class I - Light Duty	2,000 lbs (907 kg)
Class II - Medium Duty	3,500 lbs (1,587 kg)
Class III - Heavy Duty	5,000 lbs (2,267 kg)
Class IV - Extra Heavy Duty	10,000 lbs (4,535 kg)
Refer to the "Trailer Towing Weights (Maximum Trailer Weight Ratings)" chart for the Maximum Gross Trailer Weight (GTW) towable for your given drivetrain in this section.	
All trailer hitches should be professionally installed on your vehicle.	

Trailer Towing Weights (Maximum Trailer Weight Ratings)

Model	GCWR (Gross Combined Wt. Rating)	Frontal Area	Max. GTW (Gross Trailer Wt.)	Max. Trailer Tongue Wt. (See Note)
Sport - Manual Transmission	9,100 lbs (4,128 kg)	40 ft^2 (3.72 m^2)	4,000 lbs (1,814 kg)	400 lbs (181 kg)
Sport - Automatic Transmission	9,650 lbs (4,377 kg)	40 ft^2 (3.72 m^2)	4,500 lbs (2,041 kg)	450 lbs (204 kg)

Model	GCWR (Gross Combined Wt. Rating)	Frontal Area	Max. GTW (Gross Trailer Wt.)	Max. Trailer Tongue Wt. (See Note)
Sport - Automatic Transmission (Tow Package)	11,100 lbs (5,035 kg)	55 ft^2 (5.11 m^2)	6,000 lbs (2,722kg)	600 lbs (272 kg)
Sport - Automatic Transmission (Max Tow Package)	12,800 lbs (5,806 kg)	55 ft^2 (5.11 m^2)	7,650 lbs (3,470 kg)	765 lbs (347 kg)
Sport S - Manual Transmission	9,100 lbs (4,128 kg)	40 ft^2 (3.72 m^2)	4,000 lbs (1,814 kg)	400 lbs (181 kg)
Sport S - Automatic Transmission	9,650 lbs (4,377 kg)	40 ft^2 (3.72 m^2)	4,500 lbs (2,041 kg)	450 lbs (204 kg)
Sport S - Automatic Transmission (Tow Package)	11,100 lbs (5,035 kg)	55 ft^2 (5.11 m^2)	6,000 lbs (2,722 kg)	600 lbs (272 kg)
Sport S - Automatic Transmission (Max Tow Package)	12,800 lbs (5,806 kg)	55 ft^2 (5.11 m^2)	7,650 lbs (3,470 kg)	765 lbs (347 kg)
Overland - Manual Transmission	9,100 lbs (4,128 kg)	40 ft^2 (3.72 m^2)	4,000 lbs (1,814 kg)	400 lbs (181 kg)
Overland - Automatic Transmission	9,650 lbs (4,377 kg)	40 ft^2 (3.72 m^2)	4,500 lbs (2,041 kg)	450 lbs (204 kg)

Model	GCWR (Gross Combined Wt. Rating)	Frontal Area	Max. GTW (Gross Trailer Wt.)	Max. Trailer Tongue Wt. (See Note)
Overland - Automatic Transmission (Tow Package)	11,100 lbs (5,035 kg)	40 ft^2 (3.72 m^2)	6,000 lbs (2,722 kg)	600 lbs (272 kg)
Rubicon - Manual Transmission	10,000 lbs (4,536 kg)	40 ft^2 (3.72 m^2)	4,500 lbs (2,041 kg)	450 lbs (204 kg)
Rubicon - Automatic Transmission	12,450 lbs (5,647 kg)	55 ft^2 (5.11 m^2)	7,000 lbs (3,175 kg)	700 lbs (317 kg)

NOTE:

- When using a bumper mounted ball on any model, the trailer weight is limited to 3,500 lbs (1,588 kg), 30 ft^2 (2.79 m^2) frontal area, and 350 lbs (159 kg) tongue weight.
- The trailer tongue weight must be considered as part of the combined weight of occupants and cargo (ie. the GVWR), and the GVWR should never exceed the weight referenced on the Tire and Loading Information placard. Refer to “Tire Safety Information” in “Servicing And Maintenance” for further information.

Trailer And Tongue Weight

Never exceed the maximum tongue weight stamped on your bumper or trailer hitch.

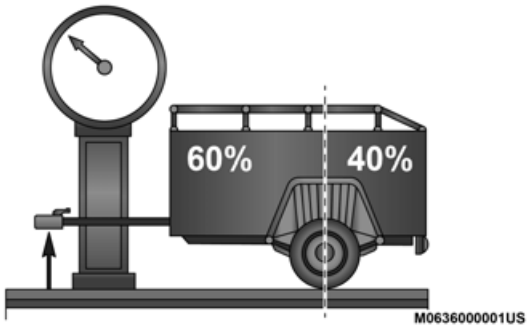

Consider the following items when computing the weight on the rear axle of the vehicle:

- The tongue weight of the trailer
- The weight of any other type of cargo or equipment put in or on your vehicle
- The weight of the driver and all passengers

NOTE:
Remember that everything put into or on the trailer adds to the load on your vehicle. Also, additional factory-installed options or dealer-installed options must be considered as part of the total load on your vehicle. Refer to the "Tire And Loading Information" placard for the maximum combined weight of occupants and cargo for your vehicle.

Towing Requirements — Tires

- Proper tire inflation pressures are essential to the safe and satisfactory operation of your vehicle. Refer to "Tires – General Information" in "Servicing And Maintenance" for proper tire inflation procedures.
- Check the trailer tires for proper tire inflation pressures before trailer usage.
- Check for signs of tire wear or visible tire damage before towing a trailer. Refer to "Tires – General Information" in "Servicing And Maintenance" for proper inspection procedure.
- When replacing tires, refer to "Tires – General Information" in "Servicing And Maintenance" for proper tire replacement procedures. Replacing tires with a higher load carrying capacity will not increase the vehicle's GVWR and GAWR limits.

Towing Requirements — Trailer Brakes

- Do **not** interconnect the hydraulic brake system or vacuum system of your vehicle with that of the trailer. This could cause inadequate braking and possible personal injury.
- An electronically actuated trailer brake controller is required when towing a trailer with electronically actuated brakes. When towing a trailer equipped with a hydraulic surge actuated brake system, an electronic brake controller is not required.

NOTE:
This vehicle has an aftermarket brake controller connector under the dash to the left of the brake pedal. This will be a four pin connector and will be gray in color.

- Trailer brakes are recommended for trailers over 1,000 lbs (453 kg) and required for trailers in excess of 2,000 lbs (907 kg).

WARNING!

- **Do not connect trailer brakes to your vehicle's hydraulic brake lines. It can overload your brake system and cause it to fail. You might not have brakes when you need them and could have an accident.**

(Continued)

WARNING! *(Continued)*

- **Towing any trailer will increase your stopping distance. When towing, you should allow for additional space between your vehicle and the vehicle in front of you. Failure to do so could result in an accident.**

CAUTION!

If the trailer weighs more than 1,000 lbs (453 kg) loaded, it should have its own brakes and they should be of adequate capacity. Failure to do this could lead to accelerated brake lining wear, higher brake pedal effort, and longer stopping distances.

Towing Requirements — Trailer Lights And Wiring

Whenever you pull a trailer, regardless of the trailer size, stoplights and turn signals on the trailer are required for motoring safety.

The Trailer Tow Package may include a four- and seven-pin wiring harness. Use a factory approved trailer harness and connector.

NOTE:
Do not cut or splice wiring into the vehicle’s wiring harness.

The electrical connections are all complete to the vehicle but you must mate the harness to a trailer connector. Refer to the following illustrations.

NOTE:

- Disconnect trailer wiring connector from the vehicle before launching a boat (or any other device plugged into vehicle's electrical connect) into water.
- Be sure to reconnect once clear from water area.

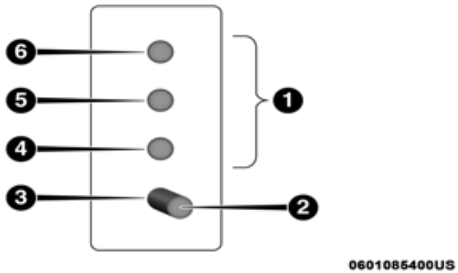

Four-Pin Connector

1 — Female Pins
2 — Male Pin
3 — Ground
4 — Park
5 — Left Stop/Turn
6 — Right Stop/Turn

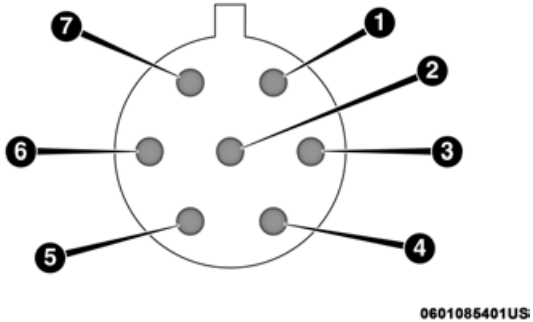

Seven-Pin Connector

1 — Battery
2 — Backup Lamps
3 — Right Stop/Turn
4 — Electric Brakes
5 — Ground
6 — Left Stop/Turn
7 — Running Lamps

Towing Tips

Before setting out on a trip, practice turning, stopping and backing the trailer in an area away from heavy traffic.

If using a manual transmission vehicle for trailer towing, all starts must be in first gear to avoid excessive clutch slippage.

Automatic Transmission — If Equipped

Select the DRIVE range when towing. The transmission controls include a drive strategy to avoid frequent shifting when towing. However, if frequent shifting does occur while in DRIVE, you can use the AutoStick shift control to manually select a lower gear.

NOTE:
Using a lower gear while operating the vehicle under heavy loading conditions, will improve performance and extend transmission life by reducing excessive shifting and heat buildup. This action will also provide better engine braking.

AutoStick — If Equipped

- When using the AutoStick shift control, select the highest gear that allows for adequate performance and avoids frequent downshifts. For example, choose "5" if the desired speed can be maintained. Choose "4" or "3" if needed to maintain the desired speed.
- To prevent excess heat generation, avoid continuous driving at high RPM. Reduce vehicle speed as necessary to avoid extended driving at high RPM. Return to a higher gear or vehicle speed when grade and road conditions allow.

Electronic Speed Control — If Equipped

- Do not use in hilly terrain or with heavy loads.
- When using the speed control, if you experience speed drops greater than 10 mph (16 km/h), disengage until you can get back to cruising speed.
- Use speed control in flat terrain and with light loads to maximize fuel efficiency.

Cooling System

To reduce potential for engine and transmission overheating, take the following actions:

City Driving

When stopped for short periods of time, shift the transmission into NEUTRAL and increase engine idle speed.

Highway Driving

Reduce speed.

Air Conditioning

Turn off temporarily.

RECREATIONAL TOWING (BEHIND MOTORHOME, ETC.)

Towing This Vehicle Behind Another Vehicle

Towing Condition	Wheels OFF the Ground	Four-Wheel Drive Models
Flat Tow	NONE	**See Instructions** • Automatic transmission in PARK. • Manual transmission in gear (NOT in NEUTRAL [N]). • Transfer case in NEUTRAL (N). • Tow in forward direction.
Dolly Tow	Front	NOT ALLOWED
	Rear	NOT ALLOWED
On Trailer	ALL	OK
NOTE: When towing your vehicle, always follow applicable state and provincial laws. Contact state and provincial Highway Safety offices for additional details.		

Recreational Towing — Four-Wheel Drive Models

NOTE:
The transfer case must be shifted into NEUTRAL (N), automatic transmission must be in PARK, and manual transmission must be in gear (NOT in NEUTRAL) for recreational towing.

CAUTION!
• **DO NOT dolly tow any 4WD vehicle. Towing with only one set of wheels on the ground (front or rear) will cause severe transmission and/or transfer case damage. Tow with all four wheels either ON the ground, or OFF the ground (using a vehicle trailer).**

(Continued)

CAUTION! *(Continued)*

- **Tow only in the forward direction. Towing this vehicle backwards can cause severe damage to the transfer case.**
- **Automatic transmissions must be placed in PARK for recreational towing.**
- **Manual transmissions must be placed in gear (not in Neutral) for recreational towing.**
- **Before recreational towing, perform the procedure outlined under "Shifting Into NEUTRAL (N)" to be certain that the transfer case is fully in NEUTRAL (N). Otherwise, internal damage will result.**
- **Towing this vehicle in violation of the above requirements can cause severe transmission and/or transfer case damage. Damage from improper towing is not covered under the New Vehicle Limited Warranty.**
- **Do not use a bumper-mounted clamp-on tow bar on your vehicle. The bumper face bar will be damaged.**

Shifting Into NEUTRAL (N)

Use the following procedure to prepare your vehicle for recreational towing.

WARNING!

You or others could be injured or killed if you leave the vehicle unattended with the transfer case in the NEUTRAL (N) position without first fully engaging the parking brake. The transfer case NEUTRAL (N) position disengages both the front and rear driveshafts from the powertrain, and will allow the vehicle to roll, even if the automatic transmission is in PARK (or manual transmission is in gear). The parking brake should always be applied when the driver is not in the vehicle.

CAUTION!

It is necessary to follow these steps to be certain that the transfer case is fully in NEUTRAL (N) before recreational towing to prevent damage to internal parts.

1. Bring the vehicle to a complete stop on level ground.
2. Press and hold the brake pedal.
3. Shift the automatic transmission into NEUTRAL or depress the clutch pedal on a manual transmission.
4. Turn the engine OFF.
5. Shift the transfer case lever into NEUTRAL (N).
6. Start the engine.
7. Shift the transmission into REVERSE.
8. Release the brake pedal (and clutch pedal on manual transmissions) for five seconds and ensure that there is no vehicle movement.
9. Repeat steps seven and eight with automatic transmission in DRIVE or manual transmission in first gear.
10. Turn the engine OFF.
11. Firmly apply the parking brake.
12. Shift the transmission into PARK or place manual transmission in gear (NOT in NEUTRAL).

CAUTION!
Damage to the transmission may occur if the transmission is shifted into PARK with the transfer case in NEUTRAL (N) and the engine running. With the transfer case in NEUTRAL (N) ensure that the engine is OFF before shifting the transmission into PARK.

13. Attach the vehicle to the tow vehicle using a suitable tow bar.
14. Release the parking brake.

Shifting Out of NEUTRAL (N)

Use the following procedure to prepare your vehicle for normal usage.

1. Bring the vehicle to a complete stop, leaving it connected to the tow vehicle.
2. Firmly apply the parking brake.
3. Start the engine.
4. Press and hold the brake pedal.
5. Shift the transmission into NEUTRAL.

6. Turn the engine OFF.

7. Shift the transfer case lever to the desired position.

NOTE:
When shifting the transfer case out of NEUTRAL (N), the engine should remain OFF to avoid gear clash.

8. Shift the automatic transmission into PARK, or place manual transmission in NEUTRAL.

9. Release the brake pedal.

10. Disconnect vehicle from the tow vehicle.

11. Start the engine.

12. Press and hold the brake pedal.

13. Release the parking brake.

14. Shift the transmission into gear, release the brake pedal (and clutch pedal on manual transmissions), and check that the vehicle operates normally.

DRIVING TIPS

On-Road Driving Tips

Utility vehicles have higher ground clearance and a narrower track to make them capable of performing in a wide variety of off-road applications. Specific design characteristics give them a higher center of gravity than conventional passenger cars.

An advantage of the higher ground clearance is a better view of the road, allowing you to anticipate problems. They are not designed for cornering at the same speeds as conventional passenger cars any more than low-slung sports cars are designed to perform satisfactorily in off-road conditions. Avoid sharp turns or abrupt maneuvers. As with other vehicles of this type, failure to operate this vehicle correctly may result in loss of control or vehicle rollover.

Off-Road Driving Tips

Side Step Removal — If Equipped

NOTE:
Prior to off-road usage, the side steps should be removed to prevent damage.

1. There are two nuts connecting to the body side and one bolt connecting to the underbody on each attachment bracket. There are four attachment brackets on each side step.

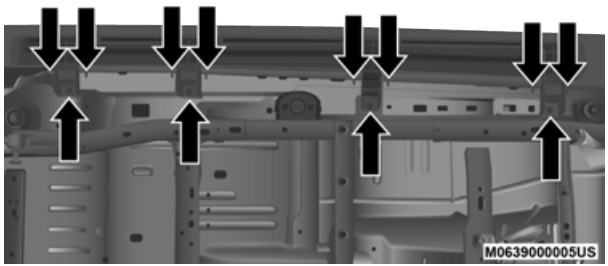

Fastener Locations (One Side)

2. Remove two nuts and one bolt from the underside of the vehicle for each of the four brackets. Repeat for other side of vehicle.

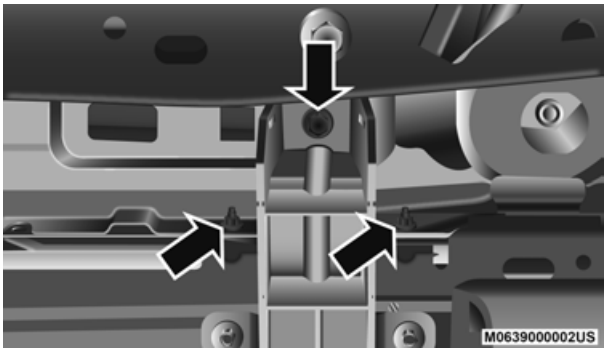

Underside Nuts

3. After all bolts and nuts have been removed, pull the side step assembly off of the vehicle.

4. To reinstall the side steps align the studs to the body side holes and fasten all nuts on all four brackets. Then secure all four bolts to the underbody. Repeat the reassembly procedure for the other side.

Bumper End Cap Removal — If Equipped

The end caps on your vehicle's front bumper can be removed by following the steps below:

NOTE:
Bumper end caps are removable on steel bumper only.

1. Loosen the two bolts that retain the GAWR bracket (Bolts #1 and #2) to the end cap using a T45 torx bit screw driver. Do not remove the bolts.

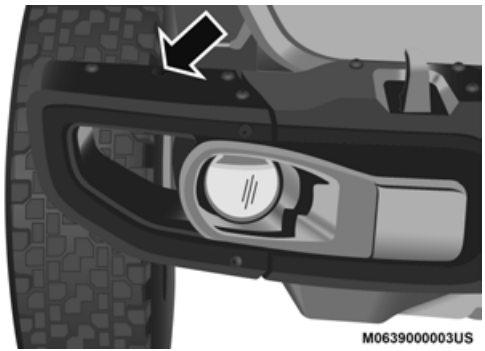

Bolt #1

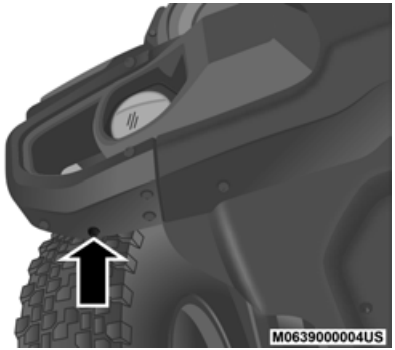

Bolt #2

2. Remove the remaining eight bolts. The end cap can now be expanded open.
3. Gently remove the end cap from the vehicle and store it where it will not get damaged.
4. Repeat this procedure on the other side.

The Basics Of Off-Road Driving

You will encounter many types of terrain driving off-road. You should be familiar with the terrain and area before proceeding. There are many types of surface conditions: hard-packed dirt, gravel, rocks, grass, sand, mud, snow and ice. Every surface has a different effect on your vehicle's steering, handling and traction. Controlling your vehicle is one of the keys to successful off-road driving, so always keep a firm grip on the steering wheel and maintain a good driving posture. Avoid sudden accelerations, turns or braking. In most cases, there are no road signs, posted speed limits or signal lights. Therefore, you will need to use your own good judgment on what is safe and what is not. When on a trail, you should always be looking ahead for surface obstacles and changes in terrain. The key is to plan your future driving route while remembering what you are currently driving over.

NOTE:
It is recommended that the Stop/Start System be disabled during off-road use.

WARNING!
Always wear your seat belt and firmly tie down cargo. Unsecured cargo can become projectiles in an off-road situation.

CAUTION!
Never park your vehicle over dry grass or other combustible materials. The heat from your vehicle exhaust system could cause a fire.

When To Use 4L (Low) Range

When off-road driving, shift into 4L (Low) for additional traction and control on slippery or difficult terrain, ascending or descending steep hills, and to increase low speed pulling power. This range should be limited to extreme situations such as deep snow, mud, steep inclines, or sand where additional low speed pulling power is needed. Vehicle speeds in excess of 25 mph (40 km/h) should be avoided when in 4L (Low) range.

CAUTION!
Do not use 4L (Low) range when operating the vehicle on dry pavement. Driveline hardware damage can result.

Simultaneous Brake And Throttle Operation

Many off-road driving conditions require the simultaneous use of the brake and throttle (two-footed driving). When climbing rocks, logs, or other stepped objects, using light brake pressure with light throttle will keep the vehicle from jerking or lurching. This technique is also used when you need to stop and restart a vehicle on a steep incline.

Driving In Snow, Mud And Sand

Snow

In heavy snow or for additional control and traction at slower speeds, shift the transmission into a low gear and the transfer case into 4L (Low) if necessary. Do not shift to a lower gear than necessary to maintain headway. Over-revving the engine can spin the wheels and traction will be lost. If you start to slow to a stop, try turning your steering wheel no more than a 1/4 turn quickly back and forth, while still applying throttle. This will allow the tires to get a fresh "bite" and help maintain your momentum.

CAUTION!
On icy or slippery roads, do not downshift at high engine RPM or vehicle speeds, because engine braking may cause skidding and loss of control.

Mud

Deep mud creates a great deal of suction around the tires and is very difficult to get through. You should use DRIVE, with the transfer case in the 4L (Low) position to maintain your momentum. If you start to slow to a stop, try turning your steering wheel no more than a 1/4 turn quickly back and forth for additional traction. Mud holes pose an increased threat of vehicle damage and getting stuck. They are normally full of debris from previous vehicles getting stuck. As a good practice before entering any mud hole, get out and determine how deep it is, if there are any hidden obstacles and if the vehicle can be safely recovered if stuck.

Sand

Soft sand is very difficult to travel through with full tire pressure. When crossing soft, sandy spots in a trail, maintain your vehicle's momentum and do not stop. The key to driving in soft sand is using the appropriate tire pressure, accelerating slowly, avoiding abrupt maneuvers and maintaining the vehicle's momentum. If you are going to be driving on large soft sandy areas or dunes, reduce your tire pressure to a minimum of 15 psi (103 kPa) to allow for a greater tire surface area. Reduced tire pressure will drastically improve your traction and handling while driving on the soft sand, but you must return the tires to normal air

pressure before driving on pavement or other hard surfaces. Be sure you have a way to reinflate the tires prior to reducing the pressure.

CAUTION!
Reduced tire pressures may cause tire unseating and total loss of air pressure. To reduce the risk of tire unseating, while at a reduced tire pressure, reduce your speed and avoid sharp turns or abrupt maneuvers.

Crossing Obstacles (Rocks And Other High Points)

While driving off-road, you will encounter many types of terrain. These varying types of terrain bring different types of obstacles. Before proceeding, review the path ahead to determine the correct approach and your ability to safely recover the vehicle if something goes wrong. Keeping a firm grip on the steering wheel, bring the vehicle to a complete stop and then inch the vehicle forward until it makes contact with the object. Apply the throttle lightly while holding a light brake pressure and ease the vehicle up and over the object.

WARNING!
Crossing obstacles can cause abrupt steering system loading which could cause you to lose control of your vehicle.

Using A Spotter

There are many times where it is hard to see the obstacle or determine the correct path. Determining the correct path can be extremely difficult when you are confronting many obstacles. In these cases have someone guide you over, through, or around the obstacle. Have the person stand a safe distance in front of you where they can see the obstacle, watch your tires and undercarriage, and guide you through.

Crossing Large Rocks

When approaching large rocks, choose a path which ensures you drive over the largest of them with your tires. This will lift your undercarriage over the obstacle. The tread of the tire is tougher and thicker than the side wall and is designed to take the abuse. Always look ahead and make every effort to cross the large rocks with your tires.

CAUTION!

- **Never attempt to straddle a rock that is large enough to strike your axles or undercarriage.**
- **Never attempt to drive over a rock which is large enough to contact the door sills.**

Crossing A Ravine, Gully, Ditch, Washout Or Rut

When crossing a ravine, gully, ditch, washout or a large rut, the angled approach is the key to maintaining your vehicle's mobility. Approach these obstacles at a 45-degree angle and let each tire go through the obstacle independently. You need to use caution when crossing large obstacles with steep sides. Do not attempt to cross any large obstacle with steep sides at an angle great enough to put the vehicle at risk of a rollover. If you get caught in a rut, dig a small trench to the right or left at a 45-degree angle ahead of the front tires. Use the removed dirt to fill the rut ahead of the turnout you just created. You should now be able to drive out following the trench you just created at a 45-degree angle.

WARNING!

There is an increased risk of rollover when crossing an obstacle, at any angle, with steep sides.

Crossing Logs

To cross a log, approach it at a slight angle (approximately 10 to 15 degrees). This allows one front tire to be on top of the log while the other just starts to climb the log. While climbing the log, modulate your brake and accelerator to avoid spinning the log out from under your tires. Then ease the vehicle off the log using your brakes.

CAUTION!

Do not attempt to cross a log with a greater diameter than the running ground clearance or the vehicle will become high-centered.

Getting High-Centered

If you get hung up or high-centered on an object, get out of the vehicle and try to determine what the vehicle is hung up on, where it is contacting the underbody and what is the best direction to recover the vehicle. Depending on what you are in contact with, jack the vehicle up and place a few rocks under the tires so the weight is off of the high point when you let the vehicle down. You can also try rocking the vehicle or winching the vehicle off the object.

CAUTION!
Winching or rocking the vehicle off hard objects increases the risk of underbody damage.

Hill Climbing

Hill climbing requires good judgment and a good understanding of your abilities and your vehicle's limitations. Hills can cause serious problems. Some are just too steep to climb and should not be attempted. You should always feel confident with the vehicle and your abilities. You should always climb hills straight up and down. Never attempt to climb a hill on an angle.

Before Climbing A Steep Hill

As you approach a hill, consider its grade or steepness. Determine if it is too steep. Look to see what the traction is on the hill side trail. Is the trail straight up and down? What is on top and the other side? Are there ruts, rocks, branches or other obstacles on the path? Can you safely recover the vehicle if something goes wrong? If everything looks good and you feel confident, shift the transmission into a lower gear with 4L (Low) engaged, and proceed with caution, maintaining your momentum as you climb the hill.

Driving Up Hill

Once you have determined your ability to proceed and have shifted into the appropriate gear, line your vehicle up for the straightest possible run. Accelerate with an easy constant throttle and apply more power as you start up the hill. Do not race forward into a steep grade; the abrupt change of grade could cause you to lose control. If the front end begins to bounce, ease off the throttle slightly to bring all four tires back on the ground. As you approach the crest of the hill, ease off the throttle and slowly proceed over the top. If the wheels start to slip as you approach the crest of a hill, ease off the accelerator and maintain headway by turning the steering wheel no more than a 1/4 turn quickly back and forth. This will provide a fresh "bite" into the surface and will usually provide enough traction to complete the climb. If you do not make it to the top, place the vehicle in REVERSE and back straight down the grade using engine resistance along with the vehicle brakes.

WARNING!
Never attempt to climb a hill at an angle or turn around on a steep grade. Driving across an incline increases the risk of a rollover, which may result in severe injury.

Driving Downhill

Before driving down a steep hill, you need to determine if it is too steep for a safe descent. What is the surface traction? Is the grade too steep to maintain a slow, controlled descent? Are there obstacles? Is it a straight descent? Is there plenty of distance at the base of the hill to regain control if the vehicle descends to fast? If you feel confident in your ability to proceed, then make sure you are in 4L (Low) and proceed with caution. Allow engine braking to control the descent and apply your brakes, if necessary, but do not allow the tires to lock.

WARNING!
Do not descend a steep grade in NEUTRAL. Use vehicle brakes in conjunction with engine braking. Descending a grade too fast could cause you to lose control and be seriously injured or killed.

Driving Across An Incline

If at all possible, avoid driving across an incline. If it is necessary, know your vehicle's abilities. Driving across an incline places more weight on the downhill wheels, which increases the possibilities of a downhill slide or rollover. Make sure the surface has good traction with firm and stable soils. If possible, transverse the incline at an angle heading slightly up or down.

WARNING!
Driving across an incline increases the risk of a rollover, which may result in severe injury.

If You Stall Or Begin To Lose Headway

If you stall or begin to lose headway while climbing a steep hill, allow your vehicle to come to a stop and immediately apply the brake. Restart the engine and shift into REVERSE. Back slowly down the hill allowing engine braking to control the descent and apply your brakes, if necessary, but do not allow the tires to lock.

WARNING!
If the engine stalls or you lose headway or cannot make it to the top of a steep hill or grade, never attempt to turn around. To do so may result in tipping and rolling the vehicle, which may result in severe injury. Always back carefully straight down a hill in REVERSE. Never back down a hill in NEUTRAL using only the vehicle brakes. Never drive diagonally across a hill, always drive straight up or down.

Driving Through Water

Extreme care should be taken crossing any type of water. Water crossings should be avoided, if possible, and only be attempted when necessary in a safe, responsible manner. You should only drive through areas which are designated and approved. You should tread lightly and avoid damage to the environment. You should know your vehicle's abilities and be able to recover it if something goes wrong. You should never stop or shut a vehicle off when crossing deep water unless you ingested water into the engine air intake. If the engine stalls, do not attempt to restart it. Determine if it has ingested water first. The key to any crossing is low and slow. Shift into first gear (manual transmission), or DRIVE (automatic transmission), with the transfer case in the 4L (Low) position and proceed very slowly with a constant slow speed (3 to 5 mph{5 to 8 km/h} maximum) and light throttle. Keep the vehicle moving; do not try to accelerate through the crossing. After crossing any water higher than the bottom of the axle differentials, you should inspect all of the vehicle fluids for signs of water ingestion.

CAUTION!

- **Water ingestion into the axles, transmission, transfer case, engine or vehicle interior can occur if you drive too fast or through too deep of water. Water can cause permanent damage to engine, driveline or other vehicle components, and your brakes will be less effective once wet and/or muddy.**
- **When driving through water, do not exceed 5 mph (8 km/h). Always check water depth before entering as a precaution, and check all fluids afterward. Driving through water may cause damage that may not be covered by the New Vehicle Limited Warranty.**

Before You Cross Any Type Of Water

As you approach any type of water, you need to determine if you can cross it safely and responsibly. If necessary, get out and walk through the water or probe it with a stick. You need to be sure of its depth, approach angle, current and bottom condition. Be careful of murky or muddy waters; check for hidden obstacles. Make sure you will not be intruding on any wildlife, and you can recover the vehicle if necessary. The key to a safe crossing is the water depth, current and bottom conditions. On soft bottoms, the vehicle will sink in, effectively increasing the water level on the vehicle. Be sure to consider this when determining the depth and the ability to safely cross.

Crossing Puddles, Pools, Flooded Areas Or Other Standing Water

Puddles, pools, flooded or other standing water areas normally contain murky or muddy waters. These water types normally contain hidden obstacles and make it difficult to determine an accurate water depth, approach angle, and bottom condition. Murky or muddy water holes are where you want to hook up tow straps prior to entering. This makes for a faster, cleaner and easier vehicle recovery. If you are able to determine you can safely cross, than proceed using the low and slow method.

CAUTION!
Muddy waters can reduce the cooling system effectiveness by depositing debris onto the radiator.

Crossing Ditches, Streams, Shallow Rivers Or Other Flowing Water

Flowing water can be extremely dangerous. Never attempt to cross a fast running stream or river even in shallow water. Fast moving water can easily push your vehicle downstream, sweeping it out of control. Even in very shallow water, a high current can still wash the dirt out from around your tires putting you and your vehicle in jeopardy. There is still a high risk of personal injury and vehicle damage with slower water currents in depths greater than the vehicle's running ground clearance. You should never attempt to cross flowing water which is deeper than the vehicle's running ground clearance. Even the slowest current can push the heaviest vehicle downstream and out of control if the water is deep enough to push on the large surface area of the vehicle's body. Before you proceed, determine the speed of the current, the water's depth, approach angle, bottom condition and if there are any obstacles. Then cross at an angle heading slightly upstream using the low and slow technique.

WARNING!
Never drive through fast moving deep water. It can push your vehicle downstream, sweeping it out of control. This could put you and your passengers at risk of injury or drowning.

After Driving Off-Road

Off-road operation puts more stress on your vehicle than does most on-road driving. After going off-road, it is always a good idea to check for damage. That way you can get any problems taken care of right away and have your vehicle ready when you need it.

- Completely inspect the underbody of your vehicle. Check tires, body structure, steering, suspension, driveline, and exhaust system for damage.
- Inspect the radiator for mud and debris and clean as required.
- Check threaded fasteners for looseness, particularly on the chassis, drivetrain components, steering, and suspension. Retighten them, if required, and torque to the values specified in the Service Manual.
- Check for accumulations of plants or brush. These things could be a fire hazard. They might hide damage to fuel lines, brake hoses, axle pinion seals, and propeller shafts.
- After extended operation in mud, sand, water, or similar dirty conditions, have the radiator, fan, brake rotors, wheels, brake linings, and axle yokes inspected and cleaned as soon as possible.

NOTE:
Inspect the clutch vent holes in the manual transmission bell housing for mud and debris and clean as required.

WARNING!
Abrasive material in any part of the brakes may cause excessive wear or unpredictable braking. You might not have full braking power when you need it to prevent a collision. If you have been operating your vehicle in dirty conditions, get your brakes checked and cleaned as necessary.

- If you experience unusual vibration after driving in mud, slush or similar conditions, check the wheels for impacted material. Impacted material can cause a wheel imbalance and freeing the wheels of it will correct the situation.

IN CASE OF EMERGENCY

HAZARD WARNING FLASHERS

The Hazard Warning flashers switch is located on the instrument panel below the climate controls.

Push the switch to turn on the Hazard Warning flashers. When the switch is activated, all directional turn signals will flash on and off to warn oncoming traffic of an emergency. Push the switch a second time to turn off the Hazard Warning flashers.

This is an emergency warning system and it should not be used when the vehicle is in motion. Use it when your vehicle is disabled and it is creating a safety hazard for other motorists.

When you must leave the vehicle to seek assistance, the Hazard Warning flashers will continue to operate even though the ignition is placed in the OFF position.

NOTE:
With extended use the Hazard Warning flashers may wear down your battery.

ASSIST AND SOS SYSTEM — IF EQUIPPED

Assist And SOS Buttons

1 — Assist Button
2 — SOS Button

If equipped, the overhead console contains an ASSIST and an SOS button.

WARNING!
ALWAYS obey traffic laws and pay attention to the road. ALWAYS drive safely with your hands on the steering wheel. You have full responsibility and assume all risks related to the use of the features and applications in this vehicle. Only use the features and applications when it is safe to do so. Failure to do so may result in an accident involving serious injury or death.

NOTE:

- Your vehicle may be transmitting data as authorized by the subscriber.
- The SOS and ASSIST buttons will only function if you are connected to an operable LTE (voice/data) or 4G (data) network. Other Uconnect services will only be operable if your SiriusXM Guardian™ service is active and you are connected to an operable LTE (voice/data) or 4G (data) network.

ASSIST Call

The ASSIST Button is used to automatically connect you to any one of the following support centers:

- Roadside Assistance – If you get a flat tire, or need a tow, just push the ASSIST button and you'll be connected to someone who can help. Roadside Assistance will know what vehicle you're driving and its location. Additional fees may apply for roadside assistance.
- SiriusXM Guardian™ Customer Care – In-vehicle support for SiriusXM Guardian™.
- Vehicle Customer Care – Total support for all other vehicle issues.

SOS Call

1. Push the SOS Call button on the overhead console.

NOTE:
In case the SOS Call button is pushed in error, there will be a 10 second delay before the SOS Call system initiates a call to a SOS operator. To cancel the SOS Call connection, push the SOS call button on the overhead console or press the cancellation button on the Device Screen. Termination of the SOS Call will turn off the green LED light on the overhead console.

2. The LED light located between the ASSIST and SOS buttons on the overhead console will turn green once a connection to a SOS operator has been made.

3. Once a connection between the vehicle and a SOS operator is made, the SOS Call system may transmit the following important vehicle information to a SOS operator:
   - Indication that the occupant placed a SOS Call.
   - The vehicle brand.
   - The last known GPS coordinates of the vehicle.
4. You should be able to speak with the SOS operator through the vehicle audio system to determine if additional help is needed.

WARNING!
ALWAYS obey traffic laws and pay attention to the road. ALWAYS drive safely with your hands on the steering wheel. You have full responsibility and assume all risks related to the use of the features and applications in this vehicle. Only use the features and applications when it is safe to do so. Failure to do so may result in an accident involving serious injury or death.

NOTE:

- Your vehicle may be transmitting data as authorized by the subscriber.
- Once a connection is made between the vehicle's SOS Call system and the SOS operator, the SOS operator may be able to open a voice connection with the vehicle to determine if additional help is needed. Once the SOS operator opens a voice connection with the vehicle's SOS Call system, the operator should be able to speak with the vehicle occupants, and hear sounds occurring in the vehicle. The vehicle's SOS Call system will attempt to remain connected with the SOS operator until the SOS operator terminates the connection.

5. The SOS operator may attempt to contact appropriate emergency responders and provide them with important vehicle information and GPS coordinates.

WARNING!
• **If anyone in the vehicle could be in danger (e.g., fire or smoke is visible, dangerous road conditions or location), do not wait for voice contact from an Emergency Services Agent. All occupants should exit the vehicle immediately and move to a safe location.**

(Continued)

WARNING! *(Continued)*

- **Never place anything on or near the vehicle's operable network and GPS antennas. You could prevent operable network and GPS signal reception, which can prevent your vehicle from placing an emergency call. An operable network and GPS signal reception is required for the SOS Call system to function properly.**
- **The SOS Call system is embedded into the vehicle's electrical system. Do not add aftermarket electrical equipment to the vehicle's electrical system. This may prevent your vehicle from sending a signal to initiate an emergency call. To avoid interference that can cause the SOS Call system to fail, never add aftermarket equipment (e.g., two-way mobile radio, CB radio, data recorder, etc.) to your vehicle's electrical system or modify the antennas on your vehicle. IF YOUR VEHICLE LOSES BATTERY POWER FOR ANY REASON (INCLUDING DURING OR AFTER AN ACCIDENT), THE UCONNECT FEATURES, APPS AND SERVICES, AMONG OTHERS, WILL NOT OPERATE.**

(Continued)

WARNING! *(Continued)*

- **Modifications to any part of the SOS Call system could cause the air bag system to fail when you need it. You could be injured if the air bag system is not there to help protect you.**

SOS Call System Limitations

Vehicles sold in Mexico **DO NOT** have SOS Call system capabilities.

SOS or other emergency line operators in Mexico may not answer or respond to SOS system calls.

If the SOS Call system detects a malfunction, any of the following may occur at the time the malfunction is detected, and at the beginning of each ignition cycle:

- The light located between the ASSIST and SOS buttons will continuously be illuminated red.
- The Device Screen will display the following message "Vehicle device requires service. Please contact your dealer."
- An In-Vehicle Audio message will state "Vehicle device requires service. Please contact your dealer."

WARNING!

- **Ignoring the Rearview Mirror light could mean you will not have SOS Call services. If the Rearview Mirror light is illuminated, have your authorized dealer service the SOS Call system immediately.**
- **The Occupant Restraint Control module turns on the Air Bag Warning Light on the instrument panel if a malfunction in any part of the system is detected. If the Air Bag Warning Light is illuminated, have your authorized dealer service the Occupant Restraint Control system immediately.**

Even if the SOS Call system is fully functional, factors beyond FCA US LLC's control may prevent or stop the SOS Call system operation. These include, but are not limited to, the following factors:

- Delayed accessories mode is active
- The ignition is in the OFF position
- The vehicle's electrical systems are not intact
- The SOS Call system software and/or hardware are damaged during a crash
- The vehicle battery loses power or becomes disconnected during a vehicle crash
- LTE (voice/data) or 4G (data) network and/or Global Positioning Satellite signals are unavailable or obstructed
- Equipment malfunction at the SOS operator facility
- Operator error by the SOS operator
- LTE (voice/data) or 4G (data) network congestion
- Weather
- Buildings, structures, geographic terrain, or tunnels

WARNING!

ALWAYS obey traffic laws and pay attention to the road. ALWAYS drive safely with your hands on the steering wheel. You have full responsibility and assume all risks related to the use of the features and applications in this vehicle. Only use the features and applications when it is safe to do so. Failure to do so may result in an accident involving serious injury or death.

NOTE:

- Your vehicle may be transmitting data as authorized by the subscriber.
- Never place anything on or near the vehicle's LTE (voice/data) or 4G (data) and GPS antennas. You could prevent LTE (voice/data) or 4G (data) and GPS signal reception,

which can prevent your vehicle from placing an emergency call. An operable LTE (voice/data) or 4G (data) network connection and a GPS signal is required for the SOS Call system to function properly.

General Information

The following regulatory statement applies to all Radio Frequency (RF) devices equipped in this vehicle:

This device complies with Part 15 of the FCC Rules and with Innovation, Science and Economic Development Canada license-exempt RSS standard(s). Operation is subject to the following two conditions:

1. This device may not cause harmful interference, and
2. This device must accept any interference received, including interference that may cause undesired operation.

NOTE:
Changes or modifications not expressly approved by the party responsible for compliance could void the user's authority to operate the equipment.

CAUTION!
To avoid damage to the mirror during cleaning, never spray any cleaning solution directly onto the mirror. Apply the solution onto a clean cloth and wipe the mirror clean.

General Information

The following regulatory statement applies to all Radio Frequency (RF) devices equipped in this vehicle:

This device complies with Part 15 of the FCC Rules and with Innovation, Science and Economic Development Canada license-exempt RSS standard(s). Operation is subject to the following two conditions:

1. This device may not cause harmful interference, and
2. This device must accept any interference received, including interference that may cause undesired operation.

Le présent appareil est conforme aux CNR d`Innovation, Science and Economic Development applicables aux appar-

eils radio exempts de licence. L'exploitation est autorisée aux deux conditions suivantes:

1. l'appareil ne doit pas produire de brouillage, et
2. l'utilisateur de l'appareil doit accepter tout brouillage radioélectrique subi, même si le brouillage est susceptible d'en compromettre le fonctionnement.

La operación de este equipo está sujeta a las siguientes dos condiciones:

1. es posible que este equipo o dispositivo no cause interferencia perjudicial y
2. este equipo o dispositivo debe aceptar cualquier interferencia, incluyendo la que pueda causar su operación no deseada.

NOTE:
Changes or modifications not expressly approved by the party responsible for compliance could void the user's authority to operate the equipment.

BULB REPLACEMENT

Replacement Bulbs

Interior Bulbs	
Bulb Name	**Bulb Number**
Automatic Transmission Indicator Lamp	658
Heater Control Lamps (2)	194
Rocker Switch Indicator Lamp (Rear Window Defogger	**
Soundbar Dome Lamp	912
** Bulbs only available from an authorized dealer.	

Exterior Bulbs	
Bulb Name	**Bulb Number**
Headlamps (2)	H13
Premium Head Lamps	LED – (Serviced At Authorized Dealer)
Sport Front Park/Turn Signal Lamps (2)	7442NALL
Premium Front Park/Turn Signal Lamps (2)	LED – (Serviced At Authorized Dealer)
Base (Overland/Rubicon) Turn Lamp	7440NA
Base (Overland/Rubicon) Park DRL Lamp	7443
Front Side Marker Lamps (2)	LED – (Serviced At Authorized Dealer)
Base Fog Lamps	PSX24W
Premium Fog Lamps	LED – (Serviced At Authorized Dealer)
Rear Premium LED Tail Lamps	LED – (Serviced At Authorized Dealer)
Rear Base Tail Lamp Stop/Tail/Turn Bulb	3157
Rear Base Tail Lamp Backup Bulb	7440
Rear Base Tail Lamp Side Marker	LED – (Serviced At Authorized Dealer)
Center High Mounted Stop Lamp	LED – (Serviced At Authorized Dealer)
License Lamp	LED – (Serviced At Authorized Dealer)
NOTE: Numbers refer to commercial bulb types that can be purchased from an authorized dealer. If a bulb needs to be replaced, visit an authorized dealer or refer to the applicable Service Manual.	

Bulb Replacement

NOTE:
Lens fogging can occur under certain atmospheric conditions. This will usually clear as atmospheric conditions occur to allow the condensation to change back into a vapor. Turning the lamps on will usually accelerate the clearing process.

Halogen Headlamps

NOTE:
We advise referring to an authorized dealer for service.

1. Open hood and support using prop rod.
2. Remove the front grille. Turn the retainers along the top a quarter turn counterclockwise and remove.
3. Pull the bottom of the grille away, starting at one side and working toward the other.
4. Remove the three screws holding the headlamp to the vehicle.
5. Remove lamp from the vehicle.
6. Remove the lamp from the collar.
7. Grasp the bulb and turn a quarter turn counterclockwise.
8. Pull the bulb from the housing.
9. Push connector locking tab to the unlock position.
10. Remove connector from bulb.
11. Push connector onto new bulb base, and push the connector locking tab to the lock position.

CAUTION!
Do not touch the new bulb with your fingers. Oil contamination will severely shorten bulb life. If the bulb comes in contact with any oily surface, clean the bulb with rubbing alcohol.

12. Reinstall bulb housing. Rotate the bulb a quarter turn clockwise.

Front Park/Turn Signal

NOTE:
We advise referring to an authorized dealer for service.

1. Remove the front wheel liner fasteners to access bulb sockets.

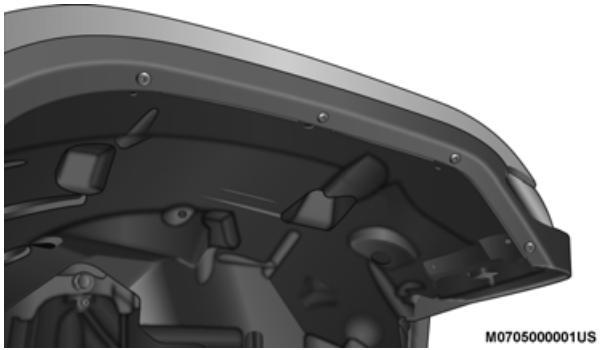

Wheel Liner

2. Turn the socket assembly a quarter turn counterclockwise and remove from housing. Pull the bulb straight from the socket to replace.

LED Front Side Marker

1. Remove the front wheel liner fasteners to access side maker screw and electrical connector.
2. Remove fastening screw in the back of the front side maker assembly and disconnect electrical connector.
3. Remove and replace LED front side marker light assembly.

Halogen Front Fog Lamp

NOTE:
We advise referring to an authorized dealer for service.

1. Reach under the vehicle to access the back of the front fog lamp.
2. Disconnect the wire harness connector from the front fog lamp connector receptacle.
3. Firmly grasp the bulb by the two latch features and squeeze them together to unlock the bulb from the back of the front fog lamp housing.
4. Pull the bulb straight out from the keyed opening in the housing and then connect the replacement bulb.

CAUTION!
Do not touch the new bulb with your fingers. Oil contamination will severely shorten bulb life. If the bulb comes in contact with any oily surface, clean the bulb with rubbing alcohol.

LED Front Fog Lamp

If your vehicle is equipped with LED fog lamps they are replaced as an assembly.

Rear Tail, Stop, Turn Signal, And Backup Lamp

1. Remove the two screws that pass through the bed sheet metal.

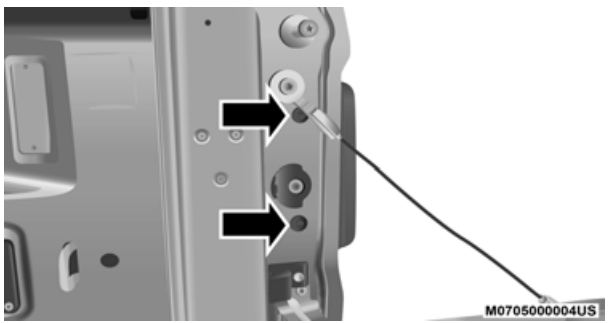

Tail Lamp Screws

2. Pull the outboard side of the lamp rearward, far enough to unsnap the two receptacles on the outboard side of the lamp housing, from the two plastic snap post retainers in the outer box side panel.

3. Remove the screws from assembly bracket to access the three bulb sockets.

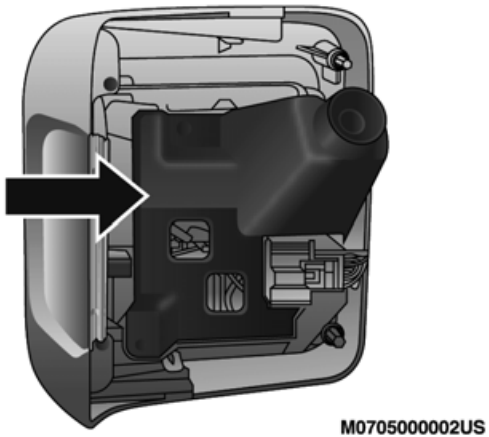

Assembly Bracket

4. Rotate the appropriate socket a quarter turn counter-clockwise, then remove it from the housing.
5. Pull the bulb straight from the socket to replace.

Center High Mounted Stop Lamp (CHMSL)

The stop lamp is mounted on the tailgate. If service is needed, obtain the LED assembly from an authorized dealer.

License Plate Lamps

See an authorized dealer to replace these LED assemblies.

FUSES

WARNING!

- **When replacing a blown fuse, always use an appropriate replacement fuse with the same amp rating as the original fuse. Never replace a fuse with another fuse of higher amp rating. Never replace a blown fuse with metal wires or any other material. Failure to use proper fuses may result in serious personal injury, fire and/or property damage.**
- **Before replacing a fuse, make sure that the ignition is off and that all the other services are switched off and/or disengaged.**

(Continued)

WARNING! *(Continued)*

- **If the replaced fuse blows again, contact an authorized dealer.**
- **If a general protection fuse for safety systems (air bag system, braking system), power unit systems (engine system, gearbox system) or steering system blows, contact an authorized dealer.**

General Information

The fuses protect electrical systems against excessive electrical current.

When a device does not work, you must check the fuse element inside the blade fuse for a break/melt.

Also, please be aware that when using power outlets for an extended periods of time with the engine off it may result in vehicle battery discharge.

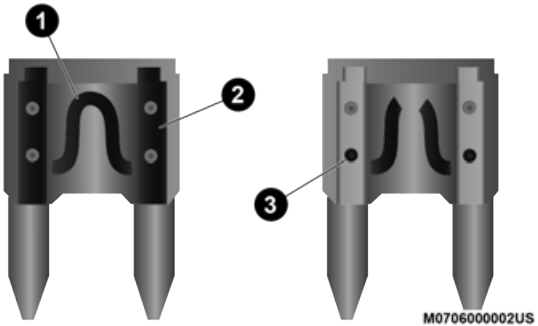

Blade Fuses

1 — Fuse Element
2 — Blade Fuse with a good/functional fuse element
3 — Blade fuse with a bad/not functional fuse element (blown fuse)

Power Distribution Center (PDC)

The Power Distribution Center is located in the engine compartment near the battery. This center contains cartridge fuses, mini fuses, and relays. The PDC top cover is labeled with each serviceable fuse/relay location, function, and size.

NOTE:
Fuses for safety systems (marked with *) must be serviced by an authorized dealer.

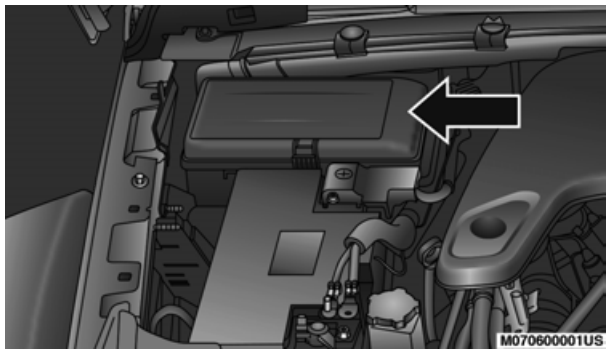

Power Distribution Center

Cavity	Cartridge Fuse	Micro Fuse	Description
F01	–	–	Spare
F02	40 Amp Green	–	Starter
F03	–	5 Amp Tan	Intelligent Battery Sensor (IBS)
F04	–	20 Amp Yellow	Fuel Pump MTR/FPCM
F05	–	5 Amp Tan	Security Gateway
F06	–	–	Spare
F07	–	–	Spare
F08	–	15 Amp Blue	Trans Control Module TCM-8HP CYGNUS
F09	–	–	Spare
F10	–	15 Amp Blue	Key Ignition Node (KIN)/Radio Frequency Hub (RF HUB)/Electric Steering Column Lock (ESCL)
F11	–	10 Amp Red	UCI Port (USB & AUX)
F12	–	25 Amp Clear	HIFI Amplifier
F13	–	–	Spare
F14	–	–	Spare
F15	–	15 Amp Blue	Instrument Panel Cluster (IPC)/Switch Bank-Heavy Duty Electrical Pkg (SWITCH BANK-HD ELEC)

Cavity	Cartridge Fuse	Micro Fuse	Description
F16	–	–	Spare
F17	–	–	Spare
F18	–	10 Amp Red	Air Conditioning Clutch (AC CLUTCH)
F19	–	–	Spare
F20	30 Amp Pink	–	Central Body Controller (CBC) 1-INTERIOR LIGHTS
F21	–	–	Spare
F22	–	10 Amp Red	Engine Control Module (ECM)/Powertrain Control Module (PCM)
F23	–	10 Amp Red	Powertrain Control Module (PCM)/Engine Control Module (ECM)
F24	–	–	Spare
F25	–	10 Amp Red	Module Shift By Wire (MOD_SBW)
F26	40 Amp Green	–	Central Body Controller (CBC) 2-EXTERIOR LIGHTS #1
F27	30 Amp Pink	–	Front Wipers
F28	40 Amp Green	–	Central Body Controller (CBC) 3-POWER LOCKS
F29	40 Amp Green	–	Central Body Controller (CBC) 4-EXTERIOR LIGHTS #2

Cavity	Cartridge Fuse	Micro Fuse	Description
F30	–	–	Spare
F31	–	10 Amp Red	DIAGNOSTIC PORT
F32	–	10 Amp Red	Heating Ventilation Air Conditioning Mod (HVAC CTRL MOD)/Steering Column Lock (SCL)/Occupant Classification Module (OCM)/ Driver Presence Detection Module (DPDM)
F33	–	10 Amp Red	ParkTronics System (PTS)/Infrared Camera Module (IRCM)/Airbag Disable Lamps (AIRBAG DISABLE LMPS)
F34	–	10 Amp Red	Electronic Stability Control (ESC)/Electric Hydraulic Power Steering (EHPS)/Smart Bar Control Module (SBCM) WAKE UP
F35	30 Amp Pink	–	BRAKE VAC PMP - If Equipped
F36	30 Amp Pink	–	TRAILER TOW MOD - If Equipped
F37	30 Amp Pink	–	TRAILER TOW CONN 7W - If Equipped
F38	20 Amp Blue	–	Engine Control Module ECM
F39	–	–	Spare
F40	–	15 Amp Blue	Drivetrain Control Module (DTCM)/Axle Lock (AXLE LOC) FT_RR

Cavity	Cartridge Fuse	Micro Fuse	Description
F41	–	15 Amp Blue	Instrument Cluster (IC)/Security GateWay (SGW) WAKE UP
F42	–	10 Amp Red	Power Control Relay Control Feed (Electric Stop/Start)
F43	–	–	Spare
F44	–	10 Amp Red	Infrared Camera (IRCAM) HEATERS
F45	–	–	Spare
F46	–	10 Amp Red	AUTO HDLP LVL MOD/LVL MTR/HDLP SW
F47	–	–	Spare
F48	–	–	Spare
F49	–	10 Amp Red	Occupant Restraint Controller (ORC)
F50	–	10 Amp Red	HD ACC - If Equipped
F51	–	10 Amp Red	Humidity Light Rain Sensor (HLRS)/Inverter 400W Wake Up/USB/InSide RearView Mirror (ISRVM)/Compass Module (CSGM)
F52	–	20 Amp Yellow	Cigar Lighter
F53	–	10 Amp Red	Wireless Speaker - If Equipped
F54	–	–	Spare
F55	–	10 Amp Red	Central Vision Processing Module (CVPM) or Parktronics Module

Cavity	Cartridge Fuse	Micro Fuse	Description
F56	–	10 Amp Red	In-Car Temp Sensor/PTC Heater Coil Feed
F57	–	20 Amp Yellow	Frt Drvr Htd Seat
F58	–	20 Amp Yellow	Frt Pass Htd Seat
F59	–	–	Spare
F60	–	15 Amp Blue	Comfort Steering Wheel Module (CSWM) (HTD STR WHEEL)
F61	–	10 Amp Red	Left Blind Spot Sensor (LBSS)/Right Blind Spot Sensor (RBSS)
F62	–	–	Spare
F63	–	10 Amp Red	Occupant Restraint Controller (ORC)
F64	–	–	Spare
F65	50 Amp Red	–	Power Inverter 400W
F66	40 Amp Green	–	HVAC BLOWER MTR FRT
F67	–	–	Spare
F68	–	–	Spare
F69	–	–	Spare
F70	–	25 Amp Clear	INJ/IGN COIL (GAS)/GLO PLUG MOD (DSL)
F71	–	–	Spare
F72	–	10 Amp Red	HD ELEC ACC PKG - If Equipped

Cavity	Cartridge Fuse	Micro Fuse	Description
F73	–	–	Spare
F74	–	–	Spare
F75	–	–	Spare
F76	–	20 Amp Yellow	ECM (GAS)/PCM (DSL)
F77	–	10 Amp Red	Heated Mirrors
F78	–	–	Spare
F79	–	20 Amp Yellow	SMART BAR CTRL MOD
F80	–	15 Amp Blue	Powertrain Control Module (PCM)/Solenoid 1 2 Block Shift
F81	30 Amp Pink	–	REAR DEFROSTER (EBL)
F82	30 Amp Pink	–	FUEL HTR - If Equipped
F83	60 Amp Yellow	–	GLOW PLUG - If Equipped
F84	30 Amp Pink	–	UREA HTR CTRL UNIT - If Equipped
F85	–	10 Amp Red	PM SENSOR - If Equipped
F86	–	–	Spare
F87	–	10 Amp Red	SUPPLY/PURGING PMP - If Equipped
F88	20 Amp Blue	–	NOx SENSOR #1/#2 - If Equipped

Cavity	Cartridge Fuse	Micro Fuse	Description
F89	–	10 Amp Red	Steering Column Control Module (SCCM)/ Cruise Control (CRUISE CTL)/Digital TV (DTV)/Airbag Disable Lamp
F90	20 Amp Blue	–	TRAILER TOW PARK LMP - If Equipped
F91	–	20 Amp Yellow	Horn
F92	40 Amp Green	–	HD ACCY #2 - If Equipped
F93	40 Amp Green	–	HD ACCY #1 - If Equipped
F94	–	10 Amp Red	Tire Pressure Monitor (TPM)/RF Hub system (CORAX)
F95	–	–	Spare
F96	–	10 Amp Red	PWR MIRROR SW
F97	–	20 Amp Yellow	RADIO/TBM
F98	–	10 Amp Red	SW BANK-HD ELEC/OFF ROAD
F99	–	–	Spare
F100	30 Amp Pink	–	ESC-ECU & VALVES
F101	30 Amp Pink	–	Drivetrain Control Module (DTCM)
F102	–	15 Amp Blue	DUAL USB PORT
F103	–	15 Amp Blue	HD ACCY #3 - If Equipped
F104	–	–	Spare

Cavity	Cartridge Fuse	Micro Fuse	Description
F105	–	10 Amp Red	Integrated Center Stack (ICS)/Heat Ventilation Air Conditioning (HVAC)
F106	50 Amp Red	–	Electronic Speed Control (ESC)/PUMP MTR
F107	–	20 Amp Yellow	TRAILER TOW STOP/TURN LT - If Equipped
F108	–	15 Amp Blue	HD ACCY #4 - If Equipped
F109	–	20 Amp Yellow	TRAILER TOW STOP/TURN RT - If Equipped
F110	–	–	Spare
F111	20 Amp Blue	–	TRAILER TOW BACKUP - If Equipped

CAUTION!

- **When installing the power distribution center cover, it is important to ensure the cover is properly positioned and fully latched. Failure to do so may allow water to get into the power distribution center and possibly result in an electrical system failure.**

(Continued)

CAUTION! ***(Continued)***

- **When replacing a blown fuse, it is important to use only a fuse having the correct amperage rating. The use of a fuse with a rating other than indicated may result in a dangerous electrical system overload. If a properly rated fuse continues to blow, it indicates a problem in the circuit that must be corrected.**

JACKING AND TIRE CHANGING

WARNING!

- **Do not attempt to change a tire on the side of the vehicle close to moving traffic. Pull far enough off the road to avoid the danger of being hit when operating the jack or changing the wheel.**
- **Being under a jacked-up vehicle is dangerous. The vehicle could slip off the jack and fall on you. You could be crushed. Never put any part of your body under a vehicle that is on a jack. If you need to get under a raised vehicle, take the vehicle to a service center where it can be raised on a lift.**
- **Never start or run the engine while the vehicle is on a jack.**
- **The jack is designed to be used as a tool for changing tires only. The jack should not be used to lift the vehicle for service purposes. The vehicle should be jacked on a firm level surface only. Avoid ice or slippery areas.**

Jack Location

The jack and jack tools are stored under the right rear seat. To remove jack and tools proceed as follows:

1. Fold up the right rear seat.
2. Remove the jack and tools by turning the wing bolt counterclockwise, remove the wing bolt and then lift the assembly out from under the seat.

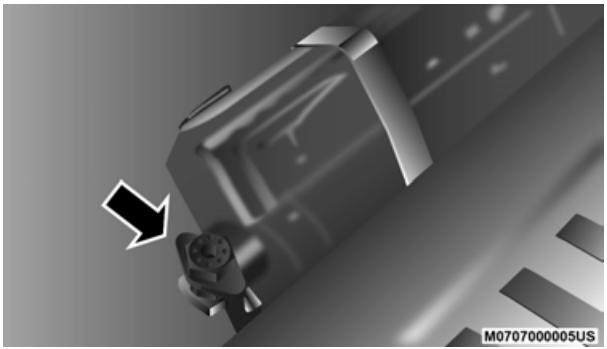

Jack And Tools

3. Release the tool bag straps from the jack and remove tools from bag.

Jack And Tool Bag

4. Remove tool kit and assemble tools.

Jack And Tool Bag

There are two ways to assemble the tools:

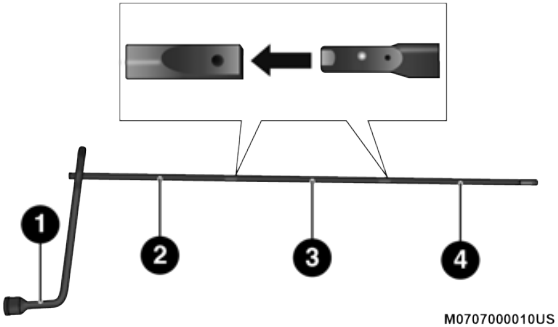

Assembled For Spare Tire Lowering/Raising

1 — Lug Wrench
2 — Long Extension Without Spring Clip 2
3 — Long Extension With Spring Clip 3
4 — Long Extension With Spring Clip 4

NOTE:
If the tailgate is lowered, the jack extension with hook can be added to this assembly to enable lowering of the spare tire without having to raise the tailgate.

CAUTION!

- **The lug wrench can only be attached to extension 2.**
- **When attaching the tool to the winch mechanism be sure the large flared end opening on extension 4 is positioned correctly over the winch mechanism adjusting nut.**
- **Damage to the lug wrench, extensions and winch mechanism may occur from improper tool assembly**

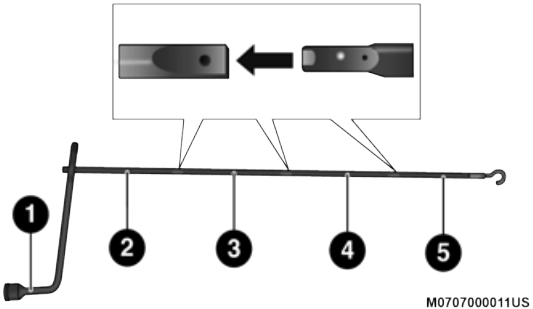

Assembled For Jack Operation

1 — Lug Wrench
2 — Long Extension 2
3 — Long Extension 3
4 — Long Extension 4
5 — Short Extension With Hook

WARNING!
After using the jack and tools, always reinstall them in the original carrier and location. While driving you may experience abrupt stopping, rapid acceleration or sharp turns. A loose jack, tools, bracket or other objects in the vehicle may move around with force, resulting in serious injury.

Spare Tire Removal

1. Remove the spare tire before attempting to jack up the truck. Attach the lug wrench to the extension tubes with the curved angle facing away from the vehicle.

Access Hole Location

2. Insert the extension tube through the access hole between the lower tailgate and the top of the bumper and into the winch mechanism tube.

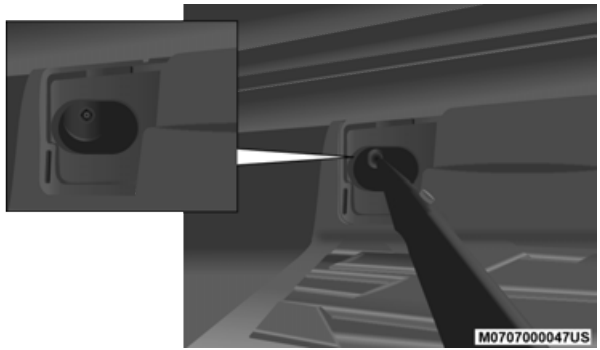

Winch Mechanism Tube

Inserting The Extension Tubes Into The Access Hole

3. Rotate the lug wrench handle counterclockwise until the spare tire is on the ground with enough cable slack to allow you to pull it out from under the vehicle.

Rotating The Lug Wrench Handle

4. Pull the spare tire out from under the vehicle to gain access to the spare tire retainer.

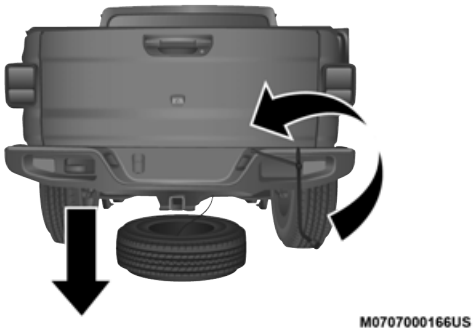

Pulling The Spare Tire Out

5. Lift the spare tire with one hand to give clearance to tilt the retainer at the end of the cable.

6. Pull the retainer through the center of the wheel.

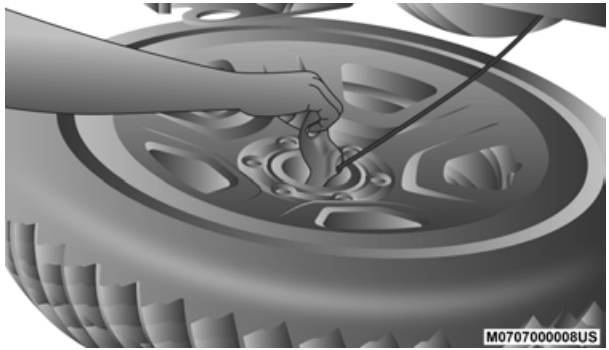

Pulling The Retainer Through The Center Of The Wheel

NOTE:
The winch mechanism is designed for use with the extension tubes only. Use of an air wrench or other power tools is not recommended and can damage the winch.

Preparations For Jacking

1. Park on a firm, level surface. Avoid ice or slippery areas.

WARNING!
Do not attempt to change a tire on the side of the vehicle close to moving traffic. Pull far enough off the road to avoid being hit when operating the jack or changing the wheel.

2. Turn on the Hazard Warning flashers.
3. Apply the parking brake.
4. Shift the automatic transmission into PARK (P), or a manual transmission into REVERSE.
5. Cycle the ignition to OFF.
6. Block both the front and rear of the wheel diagonally opposite the jacking position. For example, if the right front wheel is being changed, block the left rear wheel.

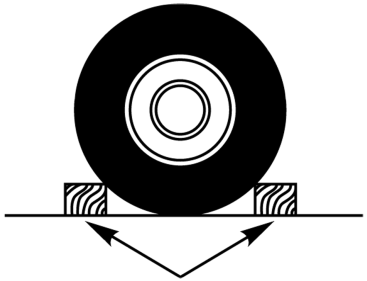

Wheel Blocked

NOTE:
Passengers should not remain in the vehicle when the vehicle is being jacked in position.

Jacking Instructions

WARNING!

Carefully follow these tire changing warnings to help prevent personal injury or damage to your vehicle:

- **Always park on a firm, level surface as far from the edge of the roadway as possible before raising the vehicle.**
- **Turn on the Hazard Warning flashers.**
- **Block the wheel diagonally opposite the wheel to be raised.**
- **Apply the parking brake firmly and shift an automatic transmission in PARK; a manual transmission to REVERSE.**
- **Never start or run the engine with the vehicle on a jack.**
- **Do not let anyone sit in the vehicle when it is on a jack.**
- **Do not get under the vehicle when it is on a jack. If you need to get under a raised vehicle, take it to a service center where it can be raised on a lift.**
- **Only use the jack in the positions indicated and for lifting this vehicle during a tire change.**

(Continued)

WARNING! *(Continued)*

- **If working on or near a roadway, be extremely careful of motor traffic.**
- **To assure that spare tires, flat or inflated, are securely stowed, spares must be stowed with the valve stem facing the ground.**

060600714

Warning Label

CAUTION!
Do not attempt to raise the vehicle by jacking on locations other than those indicated.

1. Remove the spare tire, jack and tools from the stored location.
2. Using the lug wrench, loosen the wheel nuts (but do not remove) by turning them counter clockwise one turn while the wheel is still on the ground.
3. Assemble the jack and jacking tools. Connect the jack handle driver to the extension, then to the lug wrench.

Assembled Jack And Tools

4. Operate the jack from the front or the rear of the vehicle. Place the jack under the axle tube, as shown. **Do not raise the vehicle until you are sure the jack is fully engaged.**

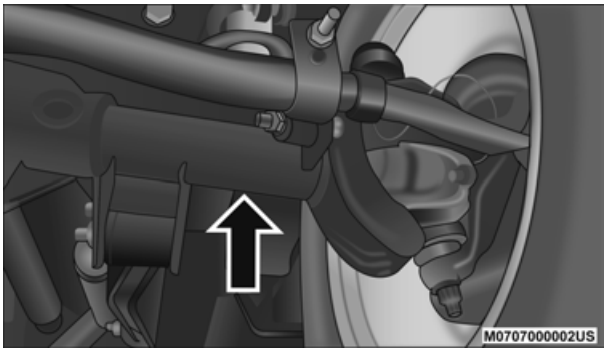

Front Jack Lifting Point

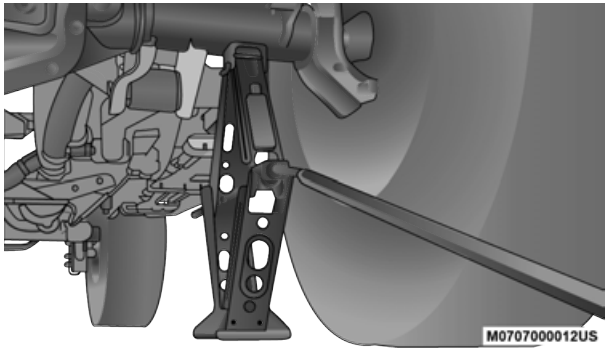

Front Jacking Location

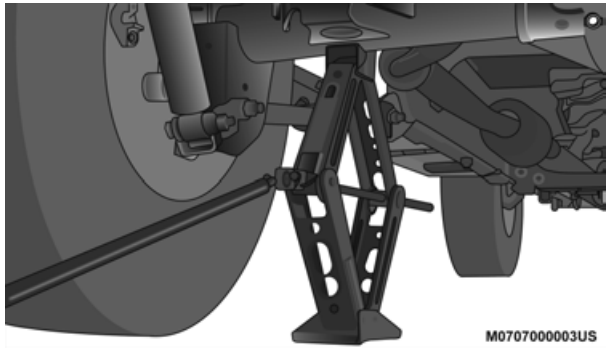

Rear Jacking Location

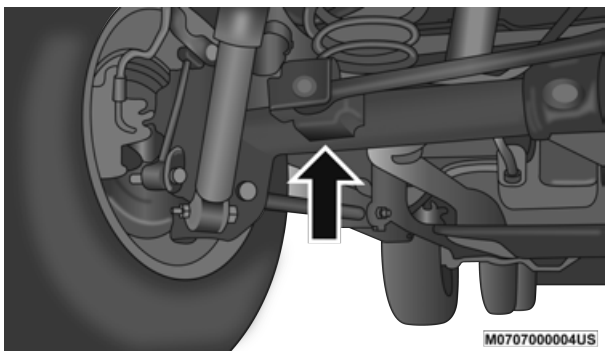

Rear Jack Lifting Point

CAUTION!
Before raising the wheel off the ground, make sure that the jack will not damage surrounding truck parts and adjust the jack position as required.

5. Raise the vehicle by turning the jack screw clockwise. Raise the vehicle only until the tire just clears the ground surface and enough clearance is obtained to install the spare tire. Minimum tire lift provides maximum stability.

WARNING!

Raising the vehicle higher than necessary can make the vehicle less stable. It could slip off the jack and hurt someone near it. Raise the vehicle only enough to remove the tire.

6. Remove the lug nuts and wheel.
7. Mount the spare tire on the axle.
8. Install the lug nuts with the cone-shaped end toward the wheel. Lightly tighten the lug nuts clockwise.

WARNING!

To avoid the risk of forcing the vehicle off the jack, do not tighten the wheel nuts fully until the vehicle has been lowered. Failure to follow this warning may result in serious injury.

9. Lower the vehicle by turning the jack screw counterclockwise, and remove the jack.
10. Finish tightening the lug nuts. Push down on the wrench while tightening for increased leverage. Alternate nuts until each nut has been tightened twice. Refer to "Torque Specifications" in "Technical Specifications" for correct lug nut torque. If in doubt about the correct tightness, have them checked with a torque wrench by an authorized dealer or service station.
11. After 25 miles (40 km), check the lug nut torque with a torque wrench to ensure that all lug nuts are properly seated against the wheel.
12. Remove the jack assembly and wheel blocks.
13. Secure the jack and tools in their proper locations.

WARNING!

A loose tire or jack thrown forward in a collision or hard stop, could endanger the occupants of the vehicle. Always stow the jack parts and the spare tire in the places provided.

To Stow The Flat Or Spare

WARNING!
A loose tire or jack thrown forward in a collision or hard stop could endanger the occupants of the vehicle. Always stow the jack parts and the spare tire in the places provided. Have the deflated (flat) tire repaired or replaced immediately.

1. Turn the wheel so that the valve stem is facing upward and toward the rear of the vehicle for convenience in checking the spare tire inflation. Slide the wheel retainer through the center of the wheel.
2. Lift the spare tire with one hand to give clearance to tilt the retainer at the end of the cable and position it properly across the wheel opening.

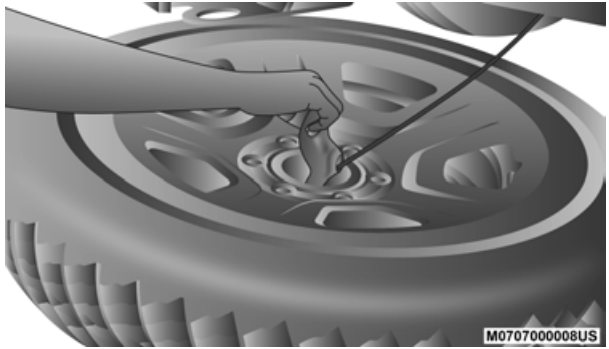

Reinstalling The Retainer

3. Attach the lug wrench to the extension tubes with the curved angle facing away from the vehicle. Insert the extension tubes through the access hole between the lower tailgate and the top of the bumper and into the winch mechanism tube.

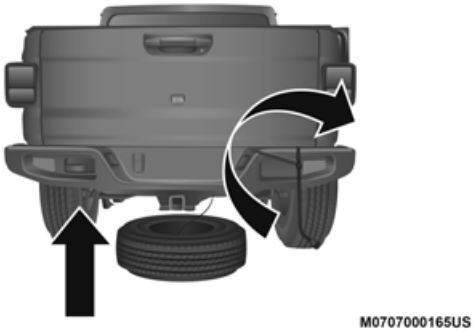

Lug Wrench And Extension Tubes Assembled And In Position

4. Rotate the lug wrench handle clockwise until the wheel is drawn into place against the underside of the vehicle. Continue to rotate until you feel the winch mechanism slip, or click three or four times. It cannot be overtightened. Push against the tire several times to ensure it is firmly in place.

Rotating The Lug Wrench Handle

NOTE:
The winch mechanism is designed for use with the extension tube only. Use of an air wrench or other power tools is not recommended and can damage the winch.

Reinstalling The Jack And Tools

1. Tighten the jack all the way down by turning the jack turn-screw counterclockwise until the jack is snug.
2. Position the jack and tool bag. Make sure the lug wrench is under the jack near the jack turn-screw.

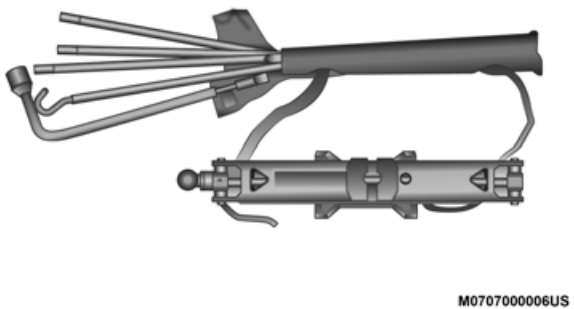

Jack And Tool Bag

3. Secure the tool bag straps to the jack.
4. Place the jack and tools in the storage position holding the jack by the jack turn-screw, place the jack and tools under the rear seat.
5. Turn the wing bolt clockwise to secure to the floor pan.

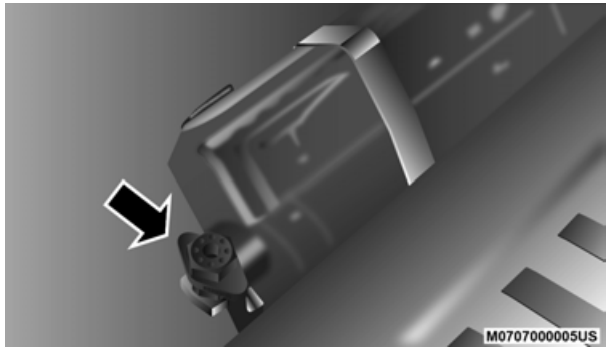

Jack Hold Down Wing Bolt

WARNING!
After using the jack and tools, always reinstall them in the original carrier and location. While driving you may experience abrupt stopping, rapid acceleration or sharp turns. A loose jack, tools or bracket or other objects in the vehicle may move around with force, resulting in serious injury.

JUMP STARTING

If your vehicle has a discharged battery, it can be jump started using a set of jumper cables and a battery in another vehicle, or by using a portable battery booster pack. Jump starting can be dangerous if done improperly, so please follow the procedures in this section carefully.

WARNING!
Do not attempt jump starting if the battery is frozen. It could rupture or explode and cause personal injury.

CAUTION!
Do not use a portable battery booster pack or any other booster source with a system voltage greater than 12 Volts or damage to the battery, starter motor, alternator or electrical system may occur.

NOTE:
When using a portable battery booster pack, follow the manufacturer's operating instructions and precautions.

Preparations For Jump Start

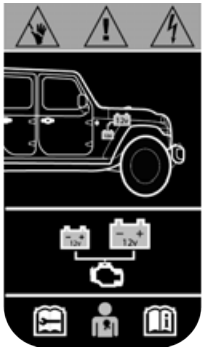

M0624000004US

Supplemental Battery — If Equipped

WARNING!
• **Only use the positive battery post on the main battery to jump start your vehicle. Serious injury or death could result if you attempt to jump start using the supplemental battery.**

(Continued)

WARNING! *(Continued)*

- **Battery gas is flammable and explosive. Keep flame or sparks away from the battery. Do not use a booster battery or any other booster source with an output greater than 12 Volts. Do not allow cable clamps to touch each other.**
- **Battery posts, terminals, and related accessories contain lead and lead compounds. Wash hands after handling.**
- **If a "fast charger" is used while the battery is in the vehicle, disconnect both vehicle battery cables before connecting the charger to the battery. Do not use a "fast charger" to provide starting.**

The battery in your vehicle is located in the right rear of the engine compartment.

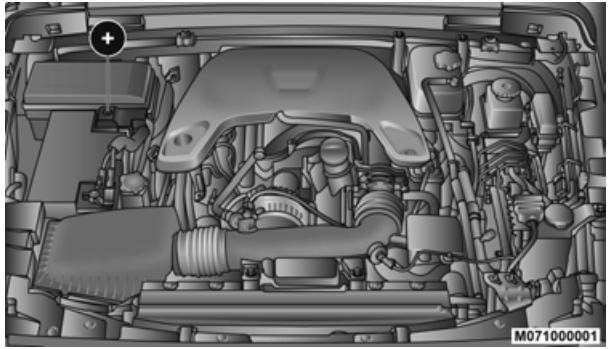

Positive Battery Post

NOTE:
The positive battery post is covered with a protective cap. Lift up on the cap to gain access to the post.

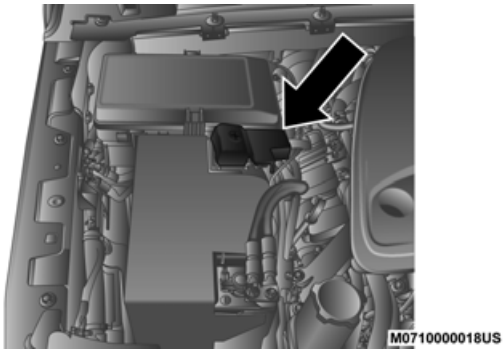

Positive Battery Post Cover

If your vehicle is equipped with a Stop/Start system, it will be equipped with two batteries. Refer to "Stop/Start System — If Equipped" in "Starting and Operating" for further information.

WARNING!

- **Take care to avoid the radiator cooling fan whenever the hood is raised. It can start anytime the ignition switch is ON. You can be injured by moving fan blades.**
- **Remove any metal jewelry such as rings, watch bands and bracelets that could make an inadvertent electrical contact. You could be seriously injured.**
- **Batteries contain sulfuric acid that can burn your skin or eyes and generate hydrogen gas which is flammable and explosive. Keep open flames or sparks away from the battery.**

1. Apply the parking brake, shift the automatic transmission into PARK (P) (manual transmission in NEUTRAL) and place the ignition in OFF mode.
2. Turn off the heater, radio, and all unnecessary electrical accessories.
3. If using another vehicle to jump start the battery, park the vehicle within the jumper cable's reach, apply the parking brake and make sure the ignition is OFF.

WARNING!
Do not allow vehicles to touch each other as this could establish a ground connection and personal injury could result.

Jump Starting Procedure

WARNING!
Failure to follow this jump starting procedure could result in personal injury or property damage due to battery explosion.

CAUTION!
Failure to follow these procedures could result in damage to the charging system of the booster vehicle or the discharged vehicle.

NOTE:
Make sure at all times that unused ends of jumper cables are not contacting each other or either vehicle while making connections.

Connecting The Jumper Cables

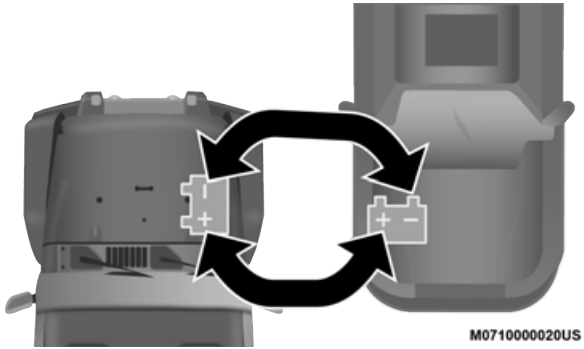

Jumper Cable Connections

1. Connect the positive **(+)** end of the jumper cable to the remote positive **(+)** post of the discharged vehicle.
2. Connect the opposite end of the positive **(+)** jumper cable to the positive **(+)** post of the booster battery.
3. Connect the negative end **(-)** of the jumper cable to the negative **(-)** post of the booster battery.

4. Connect the opposite end of the negative **(-)** jumper cable to a good engine ground (exposed metal part of the discharged vehicle's engine) away from the battery and the fuel injection system.

WARNING!
Do not connect the jumper cable to the negative (-) post of the discharged battery. The resulting electrical spark could cause the battery to explode and could result in personal injury. Only use the specific ground point, do not use any other exposed metal parts.

5. Start the engine in the vehicle that has the booster battery, let the engine idle a few minutes, and then start the engine in the vehicle with the discharged battery.

CAUTION!
Do not run the booster vehicle engine above 2,000 rpm since it provides no charging benefit, wastes fuel, and can damage booster vehicle engine.

6. Once the engine is started, remove the jumper cables in the reverse sequence:

Disconnecting The Jumper Cables

1. Disconnect the negative **(-)** end of the jumper cable from the engine ground of the vehicle with the discharged battery.
2. Disconnect the opposite end of the negative **(-)** jumper cable from the negative **(-)** post of the booster battery.
3. Disconnect the positive **(+)** end of the jumper cable from the positive **(+)** post of the booster battery.
4. Disconnect the opposite end of the positive **(+)** jumper cable from the remote positive **(+)** post of the discharged vehicle.
5. Reinstall the protective cover over the remote positive **(+)** post of the discharged vehicle.

If frequent jump starting is required to start your vehicle you should have the battery and charging system tested at an authorized dealer.

CAUTION!

Accessories plugged into the vehicle power outlets draw power from the vehicle's battery, even when not in use (i.e., cellular devices, etc.). Eventually, if plugged in long enough without engine operation, the vehicle's battery will discharge sufficiently to degrade battery life and/or prevent the engine from starting.

IF YOUR ENGINE OVERHEATS

In any of the following situations, you can reduce the potential for overheating by taking the appropriate action.

- On the highways — slow down.
- In city traffic — while stopped, shift transmission into NEUTRAL (N) , but do not increase engine idle speed.

CAUTION!

Driving with a hot cooling system could damage your vehicle. If the temperature gauge reads HOT (H), pull over and stop the vehicle. Idle the vehicle with the air conditioner turned off until the pointer drops back into the normal range. If the pointer remains on HOT (H), and you hear continuous chimes, turn the engine off immediately and call for service.

NOTE:
There are steps that you can take to slow down an impending overheat condition:

- If your Air Conditioner (A/C) is on, turn it off. The A/C system adds heat to the engine cooling system and turning the A/C off can help remove this heat.
- You can also turn the temperature control to maximum heat, the mode control to floor and the blower control to high. This allows the heater core to act as a supplement to the radiator and aids in removing heat from the engine cooling system.

WARNING!

You or others can be badly burned by hot engine coolant (antifreeze) or steam from your radiator. If you see or hear steam coming from under the hood, do not open the hood until the radiator has had time to cool. Never try to open a cooling system pressure cap when the radiator or coolant bottle is hot.

MANUAL PARK RELEASE

WARNING!
Always secure your vehicle by fully applying the parking brake before activating the Manual Park Release. In addition, you should be seated in the driver's seat with your foot firmly on the brake pedal when activating the Manual Park Release. Activating the Manual Park Release will allow your vehicle to roll away if it is not secured by the parking brake, or by proper connection to a tow vehicle. Activating the Manual Park Release on an unsecured vehicle could lead to serious injury or death for those in or around the vehicle.

To push or tow the vehicle in cases where the transmission will not shift out of PARK (P) (such as a depleted battery), a Manual Park Release is available.

Follow these steps to use the Manual Park Release:

1. Firmly apply the parking brake.
2. Using a small screwdriver or similar tool, remove the manual park release cover located in front of the gear selector, to access the release tether strap.

Manual Park Release Cover

3. Fish the tether strap up through the opening in the console base.

Tether Strap

4. Press and maintain firm pressure on the brake pedal.

5. Pull the tether strap up and to the left until the release lever locks into place in the vertical position. The vehicle is now out of PARK (P) and can be moved. Release the parking brake only when the vehicle is securely connected to a tow vehicle.

To Reset The Manual Park Release:

1. Pull upward on the tether strap, releasing it from the "locked" position.

2. Lower the Manual Park Release lever downward and to the right, into its original position.

3. Tuck the tether strap into the base of the console, and reinstall the cover.

FREEING A STUCK VEHICLE

If your vehicle becomes stuck in mud, sand or snow, it can often be moved using a rocking motion. Turn the steering wheel right and left to clear the area around the front wheels. For vehicles with automatic transmission, push and hold the lock button on the gear selector. Then, shift back and forth between DRIVE (D) and REVERSE (R) (with automatic transmission) or SECOND GEAR (2) and REVERSE (R) (with manual transmission), while gently pressing the accelerator. Use the least amount of accelerator pedal pressure that will maintain the rocking motion, without spinning the wheels or racing the engine.

NOTE:

- For vehicles with automatic transmission: Shifts between DRIVE (D) and REVERSE (R) can only be achieved at wheel speeds of 5 mph (8 km/h) or less. Whenever the transmission remains in NEUTRAL(N) for more than 2 seconds, you must press the brake pedal to engage DRIVE (D) or REVERSE (R).
- Push the "ESC OFF" switch to place the Electronic Stability Control (ESC) system in "Partial OFF" mode before rocking the vehicle. Refer to “Electronic Brake Control System” in “Safety” for further information. Once the vehicle has been freed, push the "ESC OFF" switch again to restore "ESC ON" mode.

WARNING!

Fast spinning tires can be dangerous. Forces generated by excessive wheel speeds may cause damage, or even failure, of the axle and tires. A tire could explode and injure someone. Do not spin your vehicle's wheels faster than 30 mph (48 km/h) or for longer than 30 seconds continuously without stopping when you are stuck and do not let anyone near a spinning wheel, no matter what the speed.

CAUTION!

- **Racing the engine or spinning the wheels may lead to transmission overheating and failure. Allow the engine to idle with the transmission in NEUTRAL for at least one minute after every five rocking-motion cycles. This will minimize overheating and reduce the risk of clutch or transmission failure during prolonged efforts to free a stuck vehicle.**
- **When “rocking” a stuck vehicle by shifting between DRIVE/SECOND GEAR and REVERSE, do not spin the wheels faster than 15 mph (24 km/h), or drivetrain damage may result.**
- **Revving the engine or spinning the wheels too fast may lead to transmission overheating and failure. It can also damage the tires. Do not spin the wheels above 30 mph (48 km/h) while in gear (no transmission shifting occurring).**

TOWING A DISABLED VEHICLE

This section describes procedures for towing a disabled vehicle using a commercial towing service. If the transmission and drivetrain are operable, disabled vehicles may also be towed as described under “Recreational Towing” in the “Starting And Operating” section.

Towing Condition	Wheels OFF The Ground	4WD MODELS
Flat Tow	NONE	**See instructions under “Recreational Towing” in “Starting And Operating”.** • Automatic Transmission in **PARK (P)** • Manual Transmission in gear (**NOT** in NEUTRAL) • Transfer Case in **NEUTRAL (N)** • Tow in **forward** direction
Wheel Lift Or Dolly Tow	Front	**NOT ALLOWED**
	Rear	**NOT ALLOWED**
Flatbed	**ALL**	**BEST METHOD**

Proper towing or lifting equipment is required to prevent damage to your vehicle. Use only tow bars and other equipment designed for this purpose, following equipment manufacturer’s instructions. Use of safety chains is mandatory. Attach a tow bar or other towing device to main structural members of the vehicle, not to bumpers or associated brackets. State and local laws regarding vehicles under tow must be observed.

If you must use the accessories (wipers, defrosters, etc.) while being towed, the ignition must be in the ON/RUN position, not the ACC position.

If the vehicle's battery is discharged, refer to "Manual Park Release" in this section for instructions on shifting the automatic transmission out of PARK in order to move the vehicle.

CAUTION!

- **Do not use sling type equipment when towing. Vehicle damage may occur.**
- **When securing the vehicle to a flatbed truck, do not attach to front or rear suspension components. Damage to your vehicle may result from improper towing.**

Four–Wheel Drive Models

The manufacturer recommends towing with all wheels **OFF** the ground. Acceptable methods are to tow the vehicle on a flatbed or with one end of the vehicle raised and the opposite end on a towing dolly.

If flatbed equipment is not available and the transfer case is operable, the vehicle may be towed (in the forward direction, with **ALL** wheels on the ground), **IF** the transfer case is in **NEUTRAL (N)** and the transmission is in **PARK (P)** (for automatic transmissions) or in gear (**NOT** in **NEUTRAL**, for manual transmissions). Refer to "Recreational Towing" in "Starting And Operating" for detailed instructions.

CAUTION!

- **Front or rear wheel lifts must not be used (if the remaining wheels are on the ground). Internal damage to the transmission or transfer case will occur if a front or rear wheel lift is used when towing.**
- **Towing this vehicle in violation of the above requirements can cause severe transmission and/or transfer case damage. Damage from improper towing is not covered under the New Vehicle Limited Warranty.**

Emergency Tow Hooks — If Equipped

If your vehicle is equipped with tow hooks, they are mounted in the front and the rear bumpers.

NOTE:
For off-road recovery, it is recommended to use both of the front tow hooks to minimize the risk of damage to the vehicle. Always use an appropriately rated tow strap

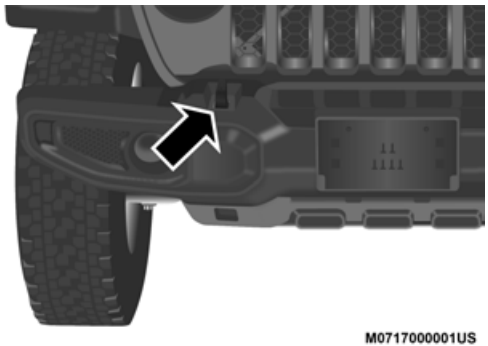

Front Tow Hook

Rear Tow Hook

WARNING!
• **Do not use a chain for freeing a stuck vehicle. Chains may break, causing serious injury or death.** • **Stand clear of vehicles when pulling with tow hooks. Tow straps may become disengaged, causing serious injury.**

CAUTION!
Tow hooks are for emergency use only, to rescue a vehicle stranded off road. Do not use tow hooks for tow truck hookup or highway towing. You could damage your vehicle. Tow straps are recommended when towing the vehicle, chains may cause vehicle damage.

ENHANCED ACCIDENT RESPONSE SYSTEM (EARS)

This vehicle is equipped with an Enhanced Accident Response System.

Please refer to “Occupant Restraint Systems” in “Safety” for further information on the Enhanced Accident Response System (EARS) function.

EVENT DATA RECORDER (EDR)

This vehicle is equipped with an Event Data Recorder (EDR). The main purpose of an EDR is to record data that will assist in understanding how a vehicle’s systems performed under certain crash or near crash-like situations, such as an air bag deployment or hitting a road obstacle.

Please refer to “Occupant Restraint Systems” in “Safety” for further information on the Event Data Recorder (EDR).

SERVICING AND MAINTENANCE

SCHEDULED SERVICING

Your vehicle is equipped with an automatic oil change indicator system. The oil change indicator system will remind you that it is time to take your vehicle in for scheduled maintenance.

Based on engine operation conditions, the oil change indicator message will illuminate. This means that service is required for your vehicle. Operating conditions such as frequent short-trips, trailer tow, or extremely hot or cold ambient temperatures will influence when the "Change Oil" or "Oil Change Required" message is displayed. Severe Operating Conditions can cause the change oil message to illuminate as early as 3,500 miles (5,600 km) since last reset. Have your vehicle serviced as soon as possible, within the next 500 miles (805 km).

On vehicles equipped with an instrument cluster display, "Oil Change Required" will be displayed and a single chime will sound, indicating that an oil change is necessary.

On vehicles not equipped with an instrument cluster display, "Change Oil" will flash in the instrument cluster odometer and a single chime will sound, indicating that an oil change is necessary.

An authorized dealer will reset the oil change indicator message after completing the scheduled oil change. If a scheduled oil change is performed by someone other than an authorized dealer, the message can be reset by referring to the steps described under "Instrument Cluster Display" in "Getting To Know Your Instrument Panel" for further information.

NOTE:
Under no circumstances should oil change intervals exceed 10,000 miles (16,000 km), 12 months or 350 hours of engine run time, whichever comes first. The 350 hours of engine run or idle time is generally only a concern for fleet customers.

Severe Duty All Models

Change Engine Oil at 4,000 miles (6,500 km) or 350 hours of engine run time if the vehicle is operated in a dusty and off-road environment, or is operated predominately at idle or only very low engine RPM's. This type of vehicle use is considered Severe Duty.

Once A Month Or Before A Long Trip:

- Check engine oil level
- Check windshield washer fluid level
- Check the tire inflation pressures and look for unusual wear or damage, rotate at the first sign of irregular wear
- Check the fluid levels of the coolant reservoir, brake master cylinder, and power steering, and fill as needed
- Check function of all interior and exterior lights

Maintenance Plan

Required Maintenance Intervals

Refer to the maintenance plan on the following pages for the required maintenance intervals.

At Every Oil Change Interval As Indicated By Oil Change Indicator System:
• Change oil and filter
• Rotate the tires **NOTE:** Rotate at the first sign of irregular wear, even if it occurs before the oil indicator system turns on.
• Inspect battery and clean and tighten terminals as required
• Inspect the CV/Universal joints
• Inspect brake pads, shoes, rotors, drums, hoses and park brake
• Inspect engine cooling system protection and hoses
• Inspect exhaust system
• Inspect engine air cleaner if using in dusty or off-road conditions
• Inspect all door latches for presence of grease, reapply if necessary

NOTE:
Using white lithium grease, lubricate the door hinge joints twice a year to prevent premature wear.

Mileage or time passed (whichever comes first)	**20,000**	**30,000**	**40,000**	**50,000**	**60,000**	**70,000**	**80,000**	**90,000**	**100,000**	**110,000**	**120,000**	**130,000**	**140,000**	**150,000**
Or Years:	**2**	**3**	**4**	**5**	**6**	**7**	**8**	**9**	**10**	**11**	**12**	**13**	**14**	**15**
Or Kilometers:	**32,000**	**48,000**	**64,000**	**80,000**	**96,000**	**112,000**	**128,000**	**144,000**	**160,000**	**176,000**	**192,000**	**208,000**	**224,000**	**240,000**
Additional Inspections														
Inspect the CV/Universal joints.	X	X	X	X	X	X	X	X	X	X	X	X	X	X
Inspect front suspension, rear suspension, tie rod ends, and replace if necessary.	X		X		X		X		X		X		X	
Inspect the front and rear axle fluid.	X				X				X				X	
Inspect the brake linings, replace as necessary.	X		X		X		X		X		X		X	
Adjust parking brake on vehicles equipped with four wheel disc brakes.	X		X		X		X		X		X		X	
Inspect transfer case fluid.		X						X						X
Additional Maintenance														
Replace engine air cleaner filter.		X			X			X			X			X
Replace air conditioning/cabin air filter.	X		X		X		X		X		X		X	

Mileage or time passed (whichever comes first)	**20,000**	**30,000**	**40,000**	**50,000**	**60,000**	**70,000**	**80,000**	**90,000**	**100,000**	**110,000**	**120,000**	**130,000**	**140,000**	**150,000**
Or Years:	**2**	**3**	**4**	**5**	**6**	**7**	**8**	**9**	**10**	**11**	**12**	**13**	**14**	**15**
Or Kilometers:	**32,000**	**48,000**	**64,000**	**80,000**	**96,000**	**112,000**	**128,000**	**144,000**	**160,000**	**176,000**	**192,000**	**208,000**	**224,000**	**240,000**
Replace spark plugs – 3.6L Engine.[1]									X					
Flush and replace the engine coolant at 10 years or 150,000 miles (240,000 km), whichever comes first.									X					X
Change the manual transmission fluid if using your vehicle for any of the following: trailer towing, snow plowing, heavy loading, taxi, police, delivery service (commercial service), off-road, desert operation or more than 50% of your driving is at sustained high speeds during hot weather, above 90°F (32°C).		X			X			X			X			X
Change transfer case fluid if using your vehicle for any of the following: police, taxi, fleet, or frequent trailer towing.					X						X			
Inspect and replace PCV valve if necessary.									X					

Mileage or time passed (whichever comes first)	**20,000**	**30,000**	**40,000**	**50,000**	**60,000**	**70,000**	**80,000**	**90,000**	**100,000**	**110,000**	**120,000**	**130,000**	**140,000**	**150,000**
Or Years:	**2**	**3**	**4**	**5**	**6**	**7**	**8**	**9**	**10**	**11**	**12**	**13**	**14**	**15**
Or Kilometers:	**32,000**	**48,000**	**64,000**	**80,000**	**96,000**	**112,000**	**128,000**	**144,000**	**160,000**	**176,000**	**192,000**	**208,000**	**224,000**	**240,000**
Change front and rear axle fluid if using your vehicle for police, taxi, fleet, off-road or frequent trailer towing.			X				X				X			

1. The spark plug change interval is mileage based only, yearly intervals do not apply.

WARNING!

- **You can be badly injured working on or around a motor vehicle. Do only service work for which you have the knowledge and the right equipment. If you have any doubt about your ability to perform a service job, take your vehicle to a competent mechanic.**
- **Failure to properly inspect and maintain your vehicle could result in a component malfunction and effect vehicle handling and performance. This could cause an accident.**

Heavy Duty Use Of The Vehicle

Change engine oil at 4,000 miles (6,500 km) or 350 hours of engine run time if the vehicle is operated in a dusty and off-road environment or is operated predominately at idle or only very low engine RPM's. This type of vehicle use is considered Severe Duty.

ENGINE COMPARTMENT

3.6L Engine

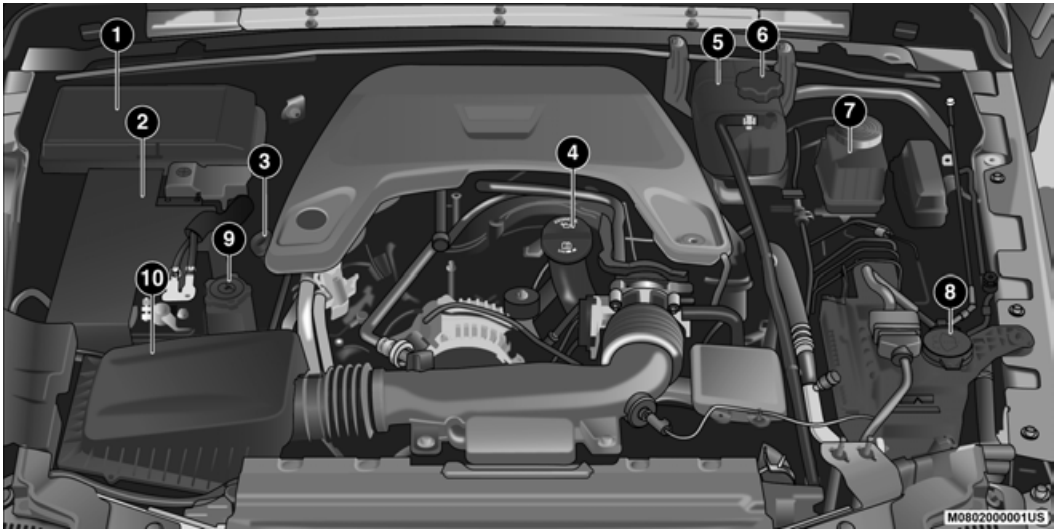

1 — Power Distribution Center (Fuses)
2 — Battery
3 — Engine Oil Dipstick
4 — Engine Oil Fill
5 — Engine Coolant Reservoir
6 — Engine Coolant Pressure Cap
7 — Brake Fluid Reservoir
8 — Washer Fluid Reservoir
9 — Power Steering Fluid Reservoir
10 — Engine Air Cleaner

Checking Oil Level

To ensure proper lubrication of your vehicle's engine, the engine oil must be maintained at the correct level. The engine oil level should be checked five minutes after a warmed up engine has been shut off.

Checking the oil while the vehicle is on level ground will improve the accuracy of the oil level readings. Always maintain the oil level within the SAFE zone on the dipstick. Adding 1 quart (0.95 liters) of oil when the reading is at the bottom of the crosshatch zone will result in a reading at the top of the crosshatch zone on these engines.

CAUTION!
Overfilling or underfilling the crankcase will cause aeration or loss of oil pressure. This could damage your engine.

Adding Washer Fluid

The fluid reservoir is located in the engine compartment. Be sure to check the fluid level at regular intervals. Fill the reservoir with windshield washer solvent only (not radiator antifreeze). When refilling the washer fluid reservoir, take some washer fluid and apply it to a cloth or towel and wipe clean the wiper blades; this will help blade performance.

To prevent freeze-up of your windshield washer system in cold weather, select a solution or mixture that meets or exceeds the temperature range of your climate. This rating information can be found on most washer fluid containers.

WARNING!
Commercial windshield washer solvents are flammable. They could ignite and burn you. Care must be exercised when filling or working around the washer solution.

Maintenance-Free Battery

Your vehicle is equipped with a maintenance-free battery. You will never have to add water, nor is periodic maintenance required.

WARNING!

- **Battery fluid is a corrosive acid solution and can burn or even blind you. Do not allow battery fluid to contact your eyes, skin, or clothing. Do not lean over a battery when attaching clamps. If acid splashes in eyes or on skin, flush the area immediately with large amounts of water. Refer to "Jump Starting Procedure" in "In Case Of Emergency" for further information.**
- **Battery gas is flammable and explosive. Keep flame or sparks away from the battery. Do not use a booster battery or any other booster source with an output greater than 12 Volts. Do not allow cable clamps to touch each other.**
- **Battery posts, terminals, and related accessories contain lead and lead compounds. Wash hands after handling.**
- **Vehicles with the Stop/Start system will be equipped with two batteries. Bot the main and the supplemental batteries must be disconnected to completely de-energize the 12 Volt electrical system.**
- **Serious injury or death could result if you do not disconnect both batteries. To learn how to properly disconnect, see your authorized dealer.**

CAUTION!

- **It is essential when replacing the cables on the battery that the positive cable is attached to the positive post and the negative cable is attached to the negative post. Battery posts are marked positive (+) and negative (-) and are identified on the battery case. Cable clamps should be tight on the terminal posts and free of corrosion.**
- **If a "fast charger" is used while the battery is in the vehicle, disconnect both vehicle battery cables before connecting the charger to the battery. Do not use a "fast charger" to provide starting voltage.**
- **Vehicles with the Stop/Start system will be equipped with two batteries. Both the main and the supplemental batteries must be disconnected to completely de-energize the 12 Volt electrical system.**
- **If the negative battery cables are not isolated properly it can cause a potential power spike or surge in the system, resulting in damage to essential electrical components.**

Pressure Washing

CAUTION!
Cleaning the engine compartment with a high pressure washer is not recommended. Precautions have been taken to safeguard all parts and connections however, the pressures generated by these machines is such that complete protection against water ingress cannot be guaranteed.

DEALER SERVICE

An authorized dealer has the qualified service personnel, special tools, and equipment to perform all service operations in an expert manner. Service Manuals are available which include detailed service information for your vehicle. Refer to these Service Manuals before attempting any procedure yourself.

NOTE:
Intentional tampering with emissions control systems may void your warranty and could result in civil penalties being assessed against you.

WARNING!
You can be badly injured working on or around a motor vehicle. Only do service work for which you have the knowledge and the proper equipment. If you have any doubt about your ability to perform a service job, take your vehicle to a competent mechanic.

Engine Oil

Change Engine Oil

Refer to “Scheduled Servicing” in “Servicing And Maintenance” for the proper maintenance intervals.

NOTE:
Under no circumstances should oil change intervals exceed 10,000 miles (16,000 km), 12 months or 350 hours of engine run time, whichever comes first. The 350 hours of engine run or idle time is generally only a concern for fleet customers.

Engine Oil Selection 3.6L Engine

For best performance and maximum protection under all types of operating conditions, the manufacturer only recommends engine oils that are API Certified and meet the requirements of FCA Material Standard MS-6395.

American Petroleum Institute (API) Engine Oil Identification Symbol

This symbol means that the oil has been certified by the American Petroleum Institute (API). The manufacturer only recommends API Certified engine oils.

This symbol certifies 0W-20, 5W-20, 0W-30, 5W-30 and 10W-30 engine oils.

CAUTION!
Do not use chemical flushes in your engine oil as the chemicals can damage your engine. Such damage is not covered by the New Vehicle Limited Warranty.

Engine Oil Viscosity (SAE Grade) — 3.6L Engine

Mopar SAE 0W-20 engine oil approved to FCA Material Standard MS-6395 such as Pennzoil, Shell Helix or equivalent is recommended for all operating temperatures. This engine oil improves low temperature starting and vehicle fuel economy.

The engine oil filler cap also shows the recommended engine oil viscosity for your engine. For information on engine oil filler cap location, refer to the “Engine Compartment” in this section.

Lubricants which do not have both the engine oil certification mark and the correct SAE viscosity grade number should not be used.

Synthetic Engine Oils

You may use synthetic engine oils provided the recommended oil quality requirements are met, and the recommended maintenance intervals for oil and filter changes are followed.

Synthetic engine oils which do not have both the engine oil certification mark and the correct SAE viscosity grade number should not be used.

Materials Added To Engine Oil

The manufacturer strongly recommends against the addition of any additives (other than leak detection dyes) to the engine oil. Engine oil is an engineered product and its performance may be impaired by supplemental additives.

Disposing Of Used Engine Oil And Oil Filters

Care should be taken in disposing of used engine oil and oil filters from your vehicle. Used oil and oil filters, indiscriminately discarded, can present a problem to the environment.

Contact an authorized dealer, service station, or governmental agency for advice on how and where used oil and oil filters can be safely discarded in your area.

Engine Oil Filter

The engine oil filter should be replaced with a new filter at every engine oil change.

Engine Oil Filter Selection

This manufacturer's engines have a full-flow type disposable oil filter. Use a filter of this type for replacement. The quality of replacement filters varies considerably. Only high quality filters should be used to ensure most efficient service. Mopar engine oil filters are high quality oil filters and are recommended.

Engine Air Cleaner Filter

Refer to the "Maintenance Plan" located in "Scheduled Servicing" in "Servicing And Maintenance" for the proper maintenance intervals.

NOTE:
Be sure to follow the "Severe Duty Conditions" maintenance interval if applicable.

WARNING!
The air induction system (air cleaner, hoses, etc.) can provide a measure of protection in the case of engine backfire. Do not remove the air induction system (air cleaner, hoses, etc.) unless such removal is necessary for repair or maintenance. Make sure that no one is near the engine compartment before starting the vehicle with the air induction system (air cleaner, hoses, etc.) removed. Failure to do so can result in serious personal injury.

Engine Air Cleaner Filter Selection

The quality of replacement engine air cleaner filters varies considerably. Only high quality filters should be used to ensure most efficient service. Mopar engine air cleaner filters are a high quality filter and are recommended.

Engine Air Cleaner Filter Inspection and Replacement

Follow the recommended maintenance intervals as shown in the Maintenance Schedule in this section.

Engine Air Cleaner Filter Removal

1. Loosen the retainers from the air cleaner cover using a suitable tool.

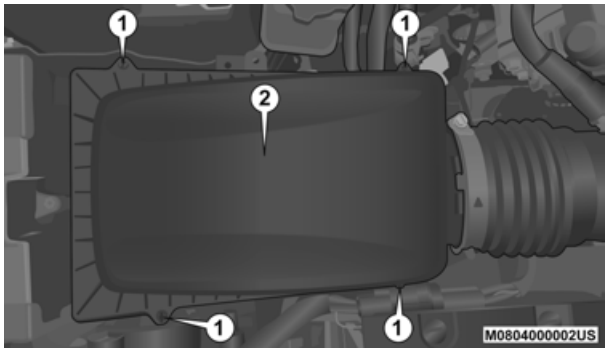

Air Cleaner Filter Cover

1 — Retainers
2 — Air Filter Cover

2. Lift the air cleaner cover to access the air cleaner filter.

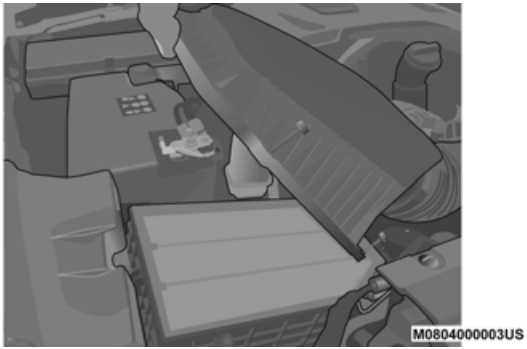

Air Cleaner Filter Cover

3. Remove the air cleaner filter element from the housing assembly.

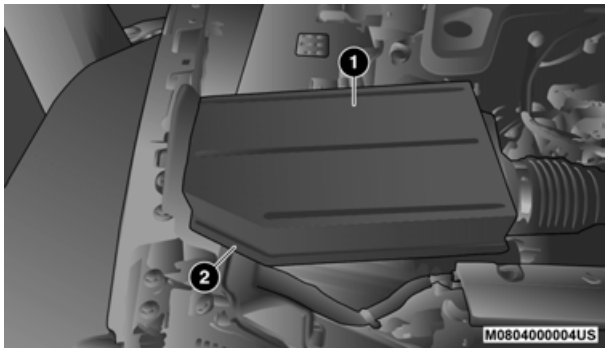

Air Cleaner Filter

1 — Air Cleaner Filter Inspection Surface
2 — Air Cleaner Filter

Engine Air Cleaner Filter Installation

NOTE:
Inspect and clean the housing if dirt or debris is present before replacing the air filter element.

1. Install the air cleaner filter element into the housing assembly with the air cleaner filter inspection surface facing downward.
2. Tighten air cleaner cover retainers using a suitable tool.

Accessory Drive Belt Inspection

WARNING!

- **Do not attempt to inspect an accessory drive belt with vehicle running.**
- **When working near the radiator cooling fan, disconnect the fan motor lead. The fan is temperature controlled and can start at any time regardless of ignition mode. You could be injured by the moving fan blades.**
- **You can be badly injured working on or around a motor vehicle. Only do service work for which you have the knowledge and the proper equipment. If you have any doubt about your ability to perform a service job, take your vehicle to a competent mechanic.**

When inspecting accessory drive belts small cracks, that run across ribbed surface of belt from rib to rib, are considered normal. This is not a reason to replace the belt. However,

cracks running along a rib (not across) are not normal. Any belt with cracks running along a rib must be replaced. In addition, have the belt replaced if it has excessive wear, frayed cords, or severe glazing.

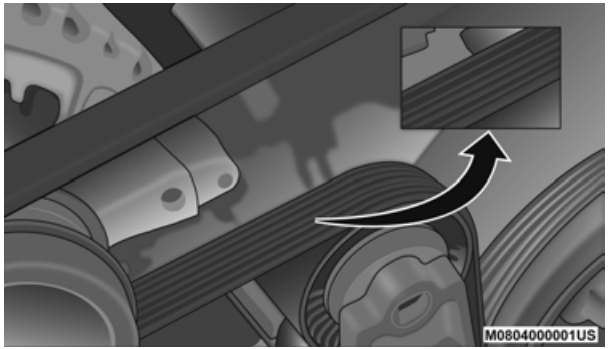

Accessory Belt (Serpentine Belt)

Conditions that would require replacement:

- Rib chunking (one or more ribs has separated from belt body)
- Rib or belt wear
- Longitudinal belt cracking (cracks between two ribs)
- Belt slips
- “Groove jumping" (belt does not maintain correct position on pulley)
- Belt broken
- Noise (objectionable squeal, squeak, or rumble is heard or felt while drive belt is in operation)

NOTE:
Identify and correct problem before new belt is installed.

Some conditions can be caused by a faulty component such as a belt pulley. Belt pulleys should be carefully inspected for damage and proper alignment.

Belt replacement on some models requires the use of special tools, we recommend having your vehicle serviced at an authorized dealer.

Air Conditioner Maintenance

For best possible performance, your air conditioner should be checked and serviced by an authorized dealer at the start of each warm season. This service should include cleaning of the condenser fins and a performance test. Drive belt tension should also be checked at this time.

WARNING!

- **Use only refrigerants and compressor lubricants approved by the manufacturer for your air conditioning system. Some unapproved refrigerants are flammable and can explode, injuring you. Other unapproved refrigerants or lubricants can cause the system to fail, requiring costly repairs. Refer to Warranty Information Book, located online, for further warranty information.**
- **The air conditioning system contains refrigerant under high pressure. To avoid risk of personal injury or damage to the system, adding refrigerant or any repair requiring lines to be disconnected should be done by an experienced technician.**

CAUTION!

Do not use chemical flushes in your air conditioning system as the chemicals can damage your air conditioning components. Such damage is not covered by the New Vehicle Limited Warranty.

Refrigerant Recovery And Recycling R-134a-If Equipped

R-134a Air Conditioning Refrigerant is a hydrofluorocarbon (HFC) that is an ozone-friendly substance. The manufacturer recommends that air conditioning service be performed by an authorized dealer or other service facilities using recovery and recycling equipment.

NOTE:
Use only manufacturer approved A/C system Polyalkylene Glycol (PAG) compressor oil and refrigerants.

Refrigerant Recovery And Recycling — R-1234yf

R-1234yf Air Conditioning Refrigerant is a hydrofluoroolefin (HFO) that is endorsed by the Environmental Protection Agency and is an ozone-friendly substance with a low global-warming potential. The manufacturer recommends that air conditioning service be performed by an authorized dealer using recovery and recycling equipment.

NOTE:
Use only manufacturer approved A/C system PAG compressor oil, and refrigerants.

Air Conditioning (A/C) Filter Replacement

WARNING!
Do not remove the cabin air filter while the vehicle is running, or while the ignition is in the ACC or ON/RUN mode. With the cabin air filter removed and the blower operating, the blower can contact hands and may propel dirt and debris into your eyes, resulting in personal injury.

The A/C air filter is located in the fresh air inlet behind the glove compartment. Perform the following procedure to replace the filter:

1. Open the glove compartment and remove all contents.
2. Push up on the glove compartment travel stop and lower the door.

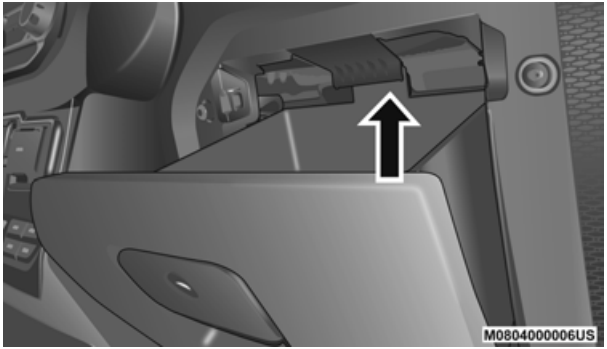

Glove Compartment Travel Stop

3. Pivot the glove compartment downward.

4. Disengage the two retaining tabs that secure the air filter access door to the HVAC housing.

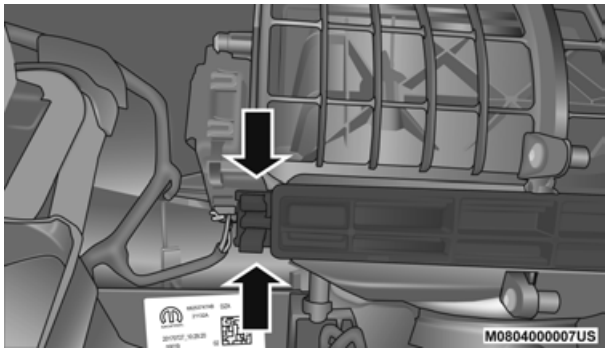

Air Filter Retaining Tabs

5. Remove the air filter from the HVAC air inlet housing. Pull the filter elements out pinching them to the right for clearance.

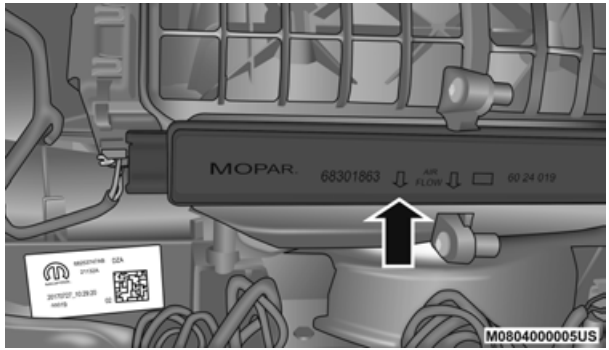

Air Filter

6. Install the A/C air filter with the air filter position indicators pointing in the same direction as removal.

CAUTION!
The cabin air filter is identified with an arrow to indicate airflow direction through the filter. Failure to properly install the filter will result in the need to replace it more often.

7. Close A/C air filter access door and secure retaining tabs.

8. Rotate the glove compartment door back into position, ensuring you have properly engaged the travel damper.

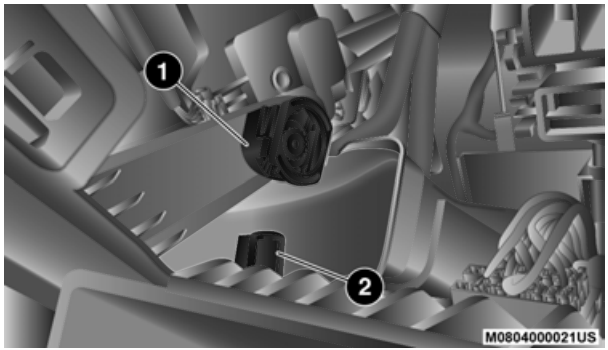

Travel Dampener

1 — Travel Dampener Housing
2 — Travel Dampener Rod

Refer to the "Maintenance Plan" located in "Scheduled Servicing" in this chapter for the proper maintenance intervals.

Body Lubrication

Locks and all body pivot points, including such items as seat tracks, door hinge pivot points and rollers, liftgate, tailgate, decklid, sliding doors, and hood hinges should be lubricated periodically with a lithium-based grease, such as Mopar Spray White Lube, to ensure quiet, easy operation and to protect against rust and wear. Prior to the application of any lubricant, the parts concerned should be wiped clean to remove dust and grit. After lubricating, excess oil and grease should be removed. Particular attention should also be given to hood latching components to ensure proper function. When performing other underhood services, the hood latch, release mechanism and safety catch should be cleaned and lubricated.

The external lock cylinders should be lubricated twice a year, preferably in the Fall and Spring. Apply a small amount of a high quality lubricant, such as Mopar Lock Cylinder Lubricant, directly into the lock cylinder.

Windshield Wiper Blades

Clean the rubber edges of the wiper blades and the windshield periodically with a sponge or soft cloth and a mild nonabrasive cleaner. This will remove accumulations of salt or road film.

Operation of the wipers on dry glass for long periods may cause deterioration of the wiper blades. Always use washer fluid when using the wipers to remove salt or dirt from a dry windshield.

Avoid using the wiper blades to remove frost or ice from the windshield. Keep the blade rubber out of contact with petroleum products such as engine oil, gasoline, etc.

NOTE:
Life expectancy of wiper blades varies depending on geographical area and frequency of use. Poor performance of blades may be present with chattering, marks, water lines, or wet spots. If any of these conditions are present, clean the wiper blades or replace as necessary.

The wiper blades and wiper arms should be inspected periodically, not just when wiper performance problems are experienced. This inspection should include the following points:

- Wear or uneven edges
- Foreign material
- Hardening or cracking
- Deformation or fatigue

If a wiper blade or wiper arm is damaged, replace the affected wiper arm or blade with a new unit. Do not attempt to repair a wiper arm or blade that is damaged.

Wiper Blade Removal/Installation

CAUTION!
Do not allow the wiper arm to spring back against the glass without the wiper blade in place or the glass may be damaged.

1. Lift the wiper arm to raise the wiper blade off of the glass, until the wiper arm is in the full up position.

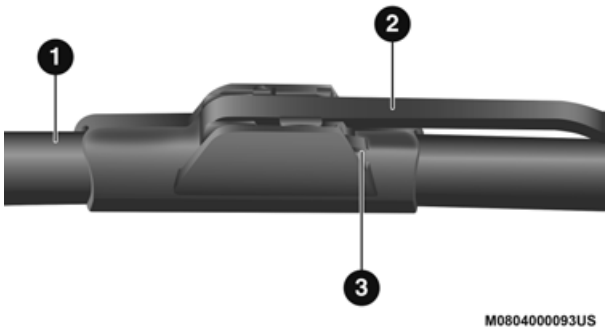

Wiper Blade With Release Tab In Locked Position

1 — Wiper Blade
2 — Wiper Arm
3 —Release Tab

2. To disengage the wiper blade from the wiper arm, press the release tab on the wiper blade, and while holding the wiper arm with one hand, slide the wiper blade down towards the base of the wiper arm.

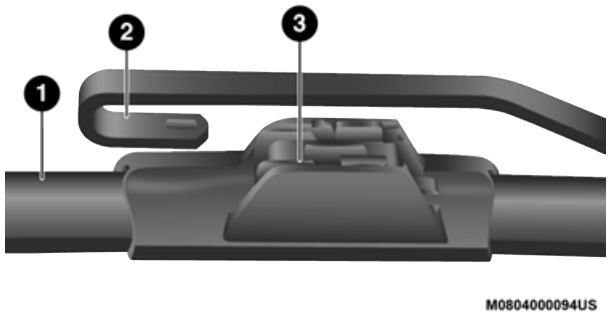

Wiper Blade With Release Tab In Unlocked Position

1 — Wiper Blade
2 — Wiper Arm J Hook
3 — J Hook Retainer

3. With the wiper blade disengaged, remove the wiper blade from the wiper arm.

4. Gently lower the wiper arm onto the glass.

Installing The Front Wipers

1. Lift the wiper arm off of the glass, until the wiper arm is in the full up position.
2. Position the wiper blade near the hook on the tip of the wiper arm.
3. Insert the hook on the tip of the arm through the opening in the wiper blade.
4. Slide the wiper blade up into the hook on the wiper arm, latch engagement will be accompanied by an audible click.
5. Gently lower the wiper blade onto the glass.

Exhaust System

The best protection against carbon monoxide entry into the vehicle body is a properly maintained engine exhaust system.

If you notice a change in the sound of the exhaust system, or if the exhaust fumes can be detected inside the vehicle, or when the underside or rear of the vehicle is damaged, have an authorized technician inspect the complete exhaust system and adjacent body areas for broken, damaged, deteriorated, or mispositioned parts. Open seams or loose connections could permit exhaust fumes to seep into the passenger compartment. In addition, have the exhaust system inspected each time the vehicle is raised for lubrication or oil change. Replace as required.

WARNING!

- **Exhaust gases can injure or kill. They contain carbon monoxide (CO), which is colorless and odorless. Breathing it can make you unconscious and can eventually poison you. To avoid breathing CO, refer to "Safety Tips" in "Safety" for further information.**
- **A hot exhaust system can start a fire if you park over materials that can burn. Such materials might be grass or leaves coming into contact with your exhaust system. Do not park or operate your vehicle in areas where your exhaust system can contact anything that can burn.**

CAUTION!

- **The catalytic converter requires the use of unleaded fuel only. Leaded gasoline will destroy the effectiveness of the catalyst as an emissions control device, may seriously reduce engine performance and cause serious damage to the engine.**

(Continued)

CAUTION! *(Continued)*

- **Damage to the catalytic converter can result if your vehicle is not kept in proper operating condition. In the event of engine malfunction, particularly involving engine misfire or other apparent loss of performance, have your vehicle serviced promptly. Continued operation of your vehicle with a severe malfunction could cause the converter to overheat, resulting in possible damage to the converter and vehicle.**

Under normal operating conditions, the catalytic converter will not require maintenance. However, it is important to keep the engine properly tuned to ensure proper catalyst operation and prevent possible catalyst damage.

NOTE:
Intentional tampering with emissions control systems can result in civil penalties being assessed against you.

In unusual situations involving grossly malfunctioning engine operation, a scorching odor may suggest severe and abnormal catalyst overheating. If this occurs, stop the vehicle, turn off the engine and allow it to cool. Service, including a tune-up to manufacturer's specifications, should be obtained immediately.

To minimize the possibility of catalytic converter damage:

- Do not interrupt the ignition when the transmission is in gear and the vehicle is in motion.
- Do not try to start the vehicle by pushing or towing the vehicle.
- Do not idle the engine with any ignition components disconnected or removed, such as when diagnostic testing, or for prolonged periods during very rough idle or malfunctioning operating conditions.

Cooling System

WARNING!

- **You or others can be badly burned by hot engine coolant (antifreeze) or steam from your radiator. If you see or hear steam coming from under the hood, do not open the hood until the radiator has had time to cool. Never open a cooling system pressure cap when the radiator or coolant bottle is hot.**
- **Keep hands, tools, clothing, and jewelry away from the radiator cooling fan when the hood is raised. The fan starts automatically and may start at any time, whether the engine is running or not.**

(Continued)

WARNING! *(Continued)*

- **When working near the radiator cooling fan, disconnect the fan motor lead or turn the ignition to the OFF mode. The fan is temperature controlled and can start at any time the ignition is in the ON mode.**

Coolant Checks

Check the engine coolant (antifreeze) protection every 12 months (before the onset of freezing weather, where applicable). If the engine coolant is dirty or rusty in appearance, the system should be drained, flushed, and refilled with fresh Organic Additive Technology (OAT) coolant (conforming to MS.90032) by an authorized dealer. Check the front of the A/C condenser (if equipped) or radiator for any accumulation of bugs, leaves, etc. If dirty, clean by gently spraying water from a garden hose vertically down the face of the A/C condenser (if equipped) or the back of the radiator core.

Check the engine cooling system hoses for brittle rubber, cracking, tears, cuts, and tightness of the connection at the coolant recovery bottle and radiator. Inspect the entire system for leaks. DO NOT REMOVE THE COOLANT PRESSURE CAP WHEN THE COOLING SYSTEM IS HOT.

Cooling System — Drain, Flush, And Refill

NOTE:
Some vehicles require special tools to add coolant properly. Failure to fill these systems properly could lead to severe internal engine damage. If any coolant is needed to be added to the system please contact an authorized dealer.

If the engine coolant (antifreeze) is dirty or contains visible sediment, have an authorized dealer clean and flush with OAT coolant (antifreeze) (conforming to MS.90032).

Refer to the “Maintenance Plan” in this section for the proper maintenance intervals.

Selection Of Coolant

Refer to “Fluids And Lubricants” in “Technical Specifications” for further information.

NOTE:

- Mixing of engine coolant (antifreeze), other than specified Organic Additive Technology (OAT) engine coolant (antifreeze), may result in engine damage and may decrease corrosion protection. Organic Additive Technology (OAT) engine coolant is different and should not be mixed with Hybrid Organic Additive Technology (HOAT) engine coolant (antifreeze) or any “globally compatible” coolant

(antifreeze). If a non-OAT engine coolant (antifreeze) is introduced into the cooling system in an emergency, the cooling system will need to be drained, flushed, and refilled with fresh OAT coolant (conforming to MS.90032), by an authorized dealer as soon as possible.

- Do not use water alone or alcohol-based engine coolant (antifreeze) products. Do not use additional rust inhibitors or antirust products, as they may not be compatible with the radiator engine coolant and may plug the radiator.
- This vehicle has not been designed for use with propylene glycol-based engine coolant (antifreeze). Use of propylene glycol based engine coolant (antifreeze) is not recommended.
- Some vehicles require special tools to add coolant properly. Failure to fill these systems properly could lead to severe internal engine damage. If any coolant is needed to be added to the system please contact an authorized dealer.

Adding Coolant

Your vehicle has been built with an improved engine coolant (OAT coolant conforming to MS.90032) that allows extended maintenance intervals. This engine coolant (antifreeze) can be used up to 10 years or 150,000 miles (240,000 km) before replacement. To prevent reducing this extended maintenance period, it is important that you use the same engine coolant (OAT coolant conforming to MS.90032) throughout the life of your vehicle.

Please review these recommendations for using Organic Additive Technology (OAT) engine coolant (antifreeze) that meets the requirements of FCA Material Standard MS.90032. When adding engine coolant (antifreeze):

- We recommend using Mopar Antifreeze/Coolant 10 Year/150,000 Mile (240,000 km) Formula OAT (Organic Additive Technology) that meets the requirements of FCA Material Standard MS.90032.
- Mix a minimum solution of 50% OAT engine coolant that meets the requirements of FCA Material Standard MS.90032 and distilled water. Use higher concentrations (not to exceed 70%) if temperatures below −34°F (−37°C) are anticipated. Please contact an authorized dealer for assistance.
- Use only high purity water, such as distilled or deionized water, when mixing the water/engine coolant (antifreeze) solution. The use of lower quality water will reduce the amount of corrosion protection in the engine cooling system.

NOTE:

- It is the owner's responsibility to maintain the proper level of protection against freezing according to the temperatures occurring in the area where the vehicle is operated.
- Some vehicles require special tools to add coolant properly. Failure to fill these systems properly could lead to severe internal engine damage. If any coolant is needed to be added to the system, please contact a local authorized dealer.
- Mixing engine coolant (antifreeze) types is not recommended and can result in cooling system damage. If HOAT and OAT coolant are mixed in an emergency, have a authorized dealer drain, flush, and refill with OAT coolant (conforming to MS.90032) as soon as possible.

Cooling System Pressure Cap

The cap must be fully tightened to prevent loss of engine coolant (antifreeze), and to ensure that engine coolant (antifreeze) will return to the radiator from the coolant expansion bottle/recovery tank if so equipped.

The cap should be inspected and cleaned if there is any accumulation of foreign material on the sealing surfaces.

WARNING!

- **Do not open hot engine cooling system. Never add engine coolant (antifreeze) when the engine is overheated. Do not loosen or remove the cap to cool an overheated engine. Heat causes pressure to build up in the cooling system. To prevent scalding or injury, do not remove the pressure cap while the system is hot or under pressure.**
- **Do not use a pressure cap other than the one specified for your vehicle. Personal injury or engine damage may result.**

Disposal Of Used Coolant

Used ethylene glycol-based coolant (antifreeze) OAT or HOAT, is a regulated substance requiring proper disposal. Check with your local authorities to determine the disposal rules for your community. To prevent ingestion by animals or children, do not store ethylene glycol-based coolant in open containers or allow it to remain in puddles on the ground. If ingested by a child or pet, seek emergency assistance immediately. Clean up any ground spills immediately.

Coolant Level

The coolant bottle provides a quick visual method for determining that the coolant level is adequate. With the engine in the OFF mode and cold, the level of the engine coolant (antifreeze) in the bottle should be between the ranges indicated on the bottle.

The radiator normally remains completely full, so there is no need to remove the radiator/coolant pressure cap unless checking for engine coolant (antifreeze) freeze point or replacing coolant. Advise your service attendant of this. As long as the engine operating temperature is satisfactory, the coolant bottle need only be checked once a month.

When additional engine coolant (antifreeze) is needed to maintain the proper level, only OAT coolant that meets the requirements of FCA Material Standard MS.90032 should be added to the coolant bottle. Do not overfill.

Points To Remember

NOTE:
When the vehicle is stopped after a few miles/kilometers of operation, you may observe vapor coming from the front of the engine compartment. This is normally a result of moisture from rain, snow, or high humidity accumulating on the radiator and being vaporized when the thermostat opens, allowing hot engine coolant (antifreeze) to enter the radiator.

If an examination of your engine compartment shows no evidence of radiator or hose leaks, the vehicle may be safely driven. The vapor will soon dissipate.

- Do not overfill the coolant expansion bottle.
- Check the freezing point of the coolant (antifreeze) in the radiator and in the coolant expansion bottle. If determined that more engine coolant (antifreeze) needs to be added to the radiator, the contents of the coolant expansion bottle must also be protected against freezing.
- If frequent engine coolant (antifreeze) additions are required, the cooling system should be pressure tested for leaks.
- Maintain engine coolant (antifreeze) concentration at a minimum of 50% OAT coolant (conforming to MS.90032) and distilled water for proper corrosion protection of your engine which contains aluminum components.
- Make sure that the coolant expansion bottle overflow hoses are not kinked or obstructed.
- Keep the front of the radiator clean. If your vehicle is equipped with air conditioning, keep the front of the condenser clean.

- Do not change the thermostat for Summer or Winter operation. If replacement is ever necessary, install ONLY the correct type thermostat. Other designs may result in unsatisfactory engine coolant (antifreeze) performance, poor gas mileage, and increased emissions.

Brake System

In order to ensure brake system performance, all brake system components should be inspected periodically. Refer to the "Maintenance Plan" located in "Scheduled Servicing" in "Servicing And Maintenance" for the proper maintenance intervals.

WARNING!
Riding the brakes can lead to brake failure and possibly a collision. Driving with your foot resting or riding on the brake pedal can result in abnormally high brake temperatures, excessive lining wear, and possible brake damage. You would not have your full braking capacity in an emergency.

Fluid Level Check — Brake Master Cylinder

The fluid level of the master cylinder should be checked whenever the vehicle is serviced, or immediately if the brake system warning light is on. If necessary, add fluid to bring level within the designated marks on the side of the reservoir of the brake master cylinder. Be sure to clean the top of the master cylinder area before removing cap. With disc brakes, fluid level can be expected to fall as the brake pads wear. Brake fluid level should be checked when pads are replaced. If the brake fluid is abnormally low, check the system for leaks.

Refer to "Fluids And Lubricants" in "Technical Specifications" for further information.

WARNING!
• **Use only manufacturer's recommended brake fluid. Refer to "Fluids And Lubricants" in "Technical Specifications" for further information. Using the wrong type of brake fluid can severely damage your brake system and/or impair its performance. The proper type of brake fluid for your vehicle is also identified on the original factory installed hydraulic master cylinder reservoir.**

(Continued)

WARNING! *(Continued)*

- **To avoid contamination from foreign matter or moisture, use only new brake fluid or fluid that has been in a tightly closed container. Keep the master cylinder reservoir cap secured at all times. Brake fluid in a open container absorbs moisture from the air resulting in a lower boiling point. This may cause it to boil unexpectedly during hard or prolonged braking, resulting in sudden brake failure. This could result in a collision.**
- **Overfilling the brake fluid reservoir can result in spilling brake fluid on hot engine parts, causing the brake fluid to catch fire. Brake fluid can also damage painted and vinyl surfaces, care should be taken to avoid its contact with these surfaces.**
- **Do not allow petroleum based fluid to contaminate the brake fluid. Brake seal components could be damaged, causing partial or complete brake failure. This could result in a collision.**

Front/Rear Axle Fluid

For normal service, periodic fluid level checks are not required. When the vehicle is serviced for other reasons the exterior surfaces of the axle assembly should be inspected. If gear oil leakage is suspected, inspect the fluid level. Refer to "Fluids And Lubricants" in "Technical Specifications" for further information.

Fluid Level Check

Lubricant should be approximately 1/8 inch (3 mm) below the bottom edge of the oil fill hole.

NOTE:
Make sure that the vehicle is level and supported by the axles.

Adding Fluid

Add lubricant only at the fill hole and only to the level specified above.

Selection Of Lubricant

Use only the manufacturer's recommended fluid. Refer to "Fluids And Lubricants" in "Technical Specifications" for further information.

Transfer Case

Selection Of Lubricant

Use only the manufacturer's recommended fluid. Refer to “Fluids And Lubricants” in “Technical Specifications” for further information.

Fluid Level Check

The fluid level should be to the bottom edge of the fill hole when the vehicle is in a level position.

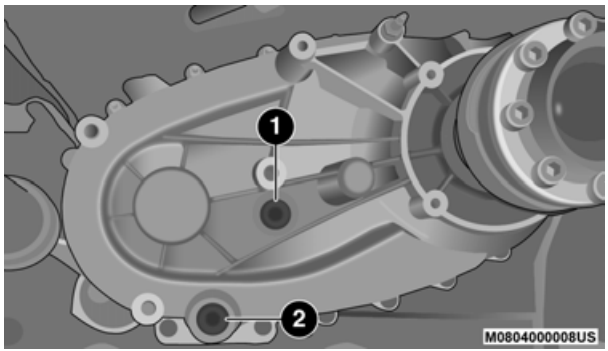

Transfer Case

1 — Fill Hole
2 — Drain Hole

Drain And Refill

Refer to the “Maintenance Plan” located in “Scheduled Servicing” in “Servicing And Maintenance” for the proper maintenance intervals.

Manual Transmission — If Equipped

Selection Of Lubricant

Use only manufacturer's recommended manual transmission fluid. Refer to “Fluids And Lubricants” in “Technical Specifications” for further information.

Fluid Level Check

Check the fluid level by removing the fill plug. The fluid level should be between the bottom of the fill hole and a point not more than 3/16 of an inch (4.76 mm) below the bottom of the hole.

Add fluid, if necessary, to maintain the proper level.

Frequency Of Fluid Change

Under normal operating conditions, the fluid installed at the factory will give satisfactory lubrication for the life of the vehicle. If the fluid becomes contaminated with water, it should be changed immediately. Otherwise, change the fluid as recommended in the Maintenance Plan. Refer to the "Maintenance Plan" located in "Scheduled Servicing" in "Servicing And Maintenance" for the proper maintenance intervals.

Automatic Transmission — If Equipped

Selection Of Lubricant

It is important to use the proper transmission fluid to ensure optimum transmission performance and life. Use only the manufacturer's specified transmission fluid. Refer to "Fluids And Lubricants" in "Technical Specifications" for fluid specifications. It is important to maintain the transmission fluid at the correct level using the recommended fluid.

NOTE:
No chemical flushes should be used in any transmission; only the approved lubricant should be used.

CAUTION!
Using a transmission fluid other than the manufacturer's recommended fluid may cause deterioration in transmission shift quality and/or torque converter shudder. Refer to "Fluids And Lubricants" in "Technical Specifications" for fluid specifications.

Special Additives

The manufacturer strongly recommends against using any special additives in the transmission. Automatic Transmission Fluid (ATF) is an engineered product and its performance may be impaired by supplemental additives. Therefore, do not add any fluid additives to the transmission. Avoid using transmission sealers as they may adversely affect seals.

CAUTION!
Do not use chemical flushes in your transmission as the chemicals can damage your transmission components. Such damage is not covered by the New Vehicle Limited Warranty.

Fluid Level Check

The fluid level is preset at the factory and does not require adjustment under normal operating conditions. Routine fluid level checks are not required; therefore the transmission has no dipstick. An authorized dealer can check your transmission fluid level using special service tools. If you notice fluid leakage or transmission malfunction, visit an authorized dealer immediately to have the transmission fluid level checked. Operating the vehicle with an improper fluid level can cause severe transmission damage.

CAUTION!
If a transmission fluid leak occurs, visit an authorized dealer immediately. Severe transmission damage may occur. An authorized dealer has the proper tools to adjust the fluid level accurately.

Fluid And Filter Changes

Under normal operating conditions, the fluid installed at the factory will provide satisfactory lubrication for the life of the vehicle.

Routine fluid and filter changes are not required. However, change the fluid and filter if the fluid becomes contaminated (with water, etc.), or if the transmission is disassembled for any reason.

RAISING THE VEHICLE

In the case where it is necessary to raise the vehicle, go to an authorized dealer or service station.

TIRES

Tire Safety Information

Tire safety information will cover aspects of the following information: Tire Markings, Tire Identification Numbers, Tire Terminology and Definitions, Tire Pressures, and Tire Loading.

Tire Markings

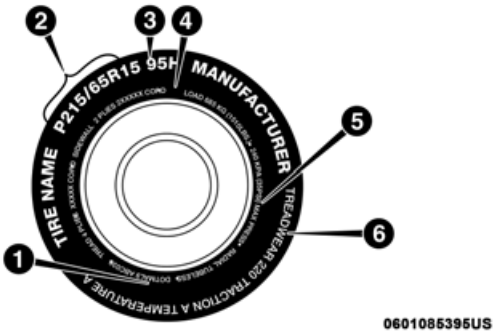

Tire Markings

1 — US DOT Safety Standards Code (TIN)
2 — Size Designation
3 — Service Description
4 — Maximum Load
5 — Maximum Pressure
6 — Treadwear, Traction and Temperature Grades

NOTE:

- P (Passenger) — Metric tire sizing is based on US design standards. P-Metric tires have the letter “P” molded into the sidewall preceding the size designation. Example: P215/65R15 95H.
- European — Metric tire sizing is based on European design standards. Tires designed to this standard have the tire size molded into the sidewall beginning with the section width. The letter "P" is absent from this tire size designation. Example: 215/65R15 96H.
- LT (Light Truck) — Metric tire sizing is based on US design standards. The size designation for LT-Metric tires is the same as for P-Metric tires except for the letters “LT” that are molded into the sidewall preceding the size designation. Example: LT235/85R16.
- Temporary spare tires are designed for temporary emergency use only. Temporary high pressure compact spare tires have the letter “T” or “S” molded into the sidewall preceding the size designation. Example: T145/80D18 103M.
- High flotation tire sizing is based on US design standards and it begins with the tire diameter molded into the sidewall. Example: 31x10.5 R15 LT.

Tire Sizing Chart

EXAMPLE:
Example Size Designation: P215/65R15XL 95H, 215/65R15 96H, LT235/85R16C, T145/80D18 103M, 31x10.5 R15 LT
P = Passenger car tire size based on U.S. design standards, or **"....blank...."** = Passenger car tire based on European design standards, or **LT** = Light truck tire based on U.S. design standards, or **T or S** = Temporary spare tire, or **31** = Overall diameter in inches (in) **215, 235, 145** = Section width in millimeters (mm) **65, 85, 80** = Aspect ratio in percent (%) • Ratio of section height to section width of tire, or **10.5** = Section width in inches (in)
R = Construction code • "R" means radial construction, or • "D" means diagonal or bias construction
15, 16, 18 = Rim diameter in inches (in)
Service Description:
95 = Load Index • A numerical code associated with the maximum load a tire can carry

EXAMPLE:
H = Speed Symbol • A symbol indicating the range of speeds at which a tire can carry a load corresponding to its load index under certain operating conditions • The maximum speed corresponding to the speed symbol should only be achieved under specified operating conditions (i.e., tire pressure, vehicle loading, road conditions, and posted speed limits)
Load Identification: Absence of the following load identification symbols on the sidewall of the tire indicates a Standard Load (SL) tire: • **XL** = Extra load (or reinforced) tire, or • **LL** = Light load tire or • **C, D, E, F, G** = Load range associated with the maximum load a tire can carry at a specified pressure
Maximum Load – Maximum load indicates the maximum load this tire is designed to carry
Maximum Pressure – Maximum pressure indicates the maximum permissible cold tire inflation pressure for this tire

Tire Identification Number (TIN)

The Tire Identification Number (TIN) may be found on one or both sides of the tire; however, the date code may only be on one side. Tires with white sidewalls will have the full TIN, including the date code, located on the white sidewall side of the tire. Look for the TIN on the outboard side of black sidewall tires as mounted on the vehicle. If the TIN is not found on the outboard side, then you will find it on the inboard side of the tire.

EXAMPLE:
DOT MA L9 ABCD 0301
DOT = Department of Transportation • This symbol certifies that the tire is in compliance with the U.S. Department of Transportation tire safety standards and is approved for highway use
MA = Code representing the tire manufacturing location (two digits)
L9 = Code representing the tire size (two digits)
ABCD = Code used by the tire manufacturer (one to four digits)
03 = Number representing the week in which the tire was manufactured (two digits) • 03 means the 3rd week
01 = Number representing the year in which the tire was manufactured (two digits) • 01 means the year 2001 • Prior to July 2000, tire manufacturers were only required to have one number to represent the year in which the tire was manufactured. Example: 031 could represent the 3rd week of 1981 or 1991

Tire Terminology And Definitions

Term	Definition
B-Pillar	The vehicle B-Pillar is the structural member of the body located behind the front door.
Cold Tire Inflation Pressure	Cold tire inflation pressure is defined as the tire pressure after the vehicle has not been driven for at least three hours, or driven less than 1 mile (1.6 km) after sitting for a minimum of three hours. Inflation pressure is measured in units of PSI (pounds per square inch) or kPa (kilopascals).
Maximum Inflation Pressure	The maximum inflation pressure is the maximum permissible cold tire inflation pressure for this tire. The maximum inflation pressure is molded into the sidewall.
Recommended Cold Tire Inflation Pressure	Vehicle manufacturer's recommended cold tire inflation pressure as shown on the tire placard.
Tire Placard	A label permanently attached to the vehicle describing the vehicle's loading capacity, the original equipment tire sizes and the recommended cold tire inflation pressures.

Tire Loading And Tire Pressure

NOTE:
The proper cold tire inflation pressure is listed on the driver's side B-Pillar or the rear edge of the driver's side door.

Check the inflation pressure of each tire, including the spare tire (if equipped), at least monthly and inflate to the recommended pressure for your vehicle.

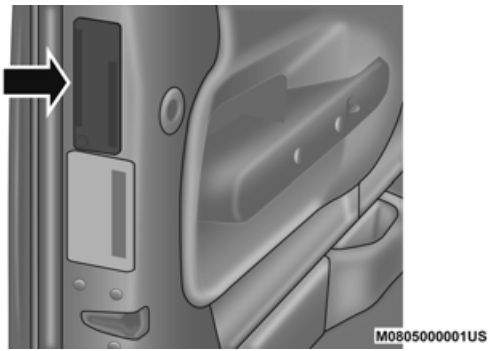

Example Tire Placard Location (Door)

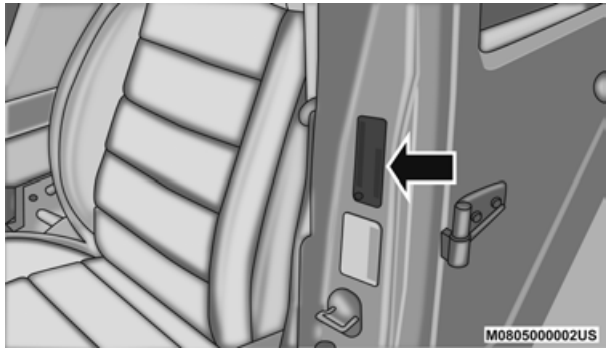

Example Tire Placard Location (B-Pillar)

Tire And Loading Information Placard

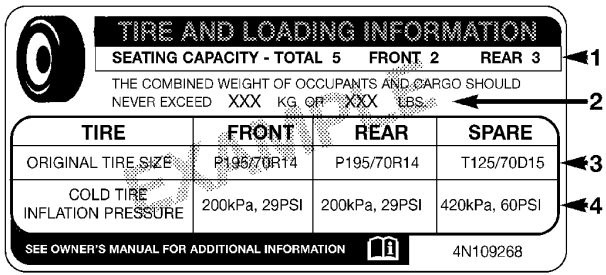

Tire And Loading Information Placard

This placard tells you important information about the:

1. Number of people that can be carried in the vehicle.
2. Total weight your vehicle can carry.
3. Tire size designed for your vehicle.
4. Cold tire inflation pressures for the front, rear, and spare tires.

Loading

The vehicle maximum load on the tire must not exceed the load carrying capacity of the tire on your vehicle. You will not exceed the tire's load carrying capacity if you adhere to the loading conditions, tire size, and cold tire inflation pressures specified on the Tire and Loading Information placard in “Vehicle Loading” in the “Starting And Operating” section of this manual.

NOTE:
Under a maximum loaded vehicle condition, gross axle weight ratings (GAWRs) for the front and rear axles must not be exceeded.

For further information on GAWRs, vehicle loading, and trailer towing, refer to “Vehicle Loading” in the “Starting And Operating” section of this manual.

To determine the maximum loading conditions of your vehicle, locate the statement “The combined weight of occupants and cargo should never exceed XXX kg or XXX lbs” on the Tire and Loading Information placard. The combined weight of occupants, cargo/luggage and trailer tongue weight (if applicable) should never exceed the weight referenced here.

Steps For Determining Correct Load Limit—

(1) Locate the statement "The combined weight of occupants and cargo should never exceed XXX kg or XXX lbs." on your vehicle's placard.

(2) Determine the combined weight of the driver and passengers that will be riding in your vehicle.

(3) Subtract the combined weight of the driver and passengers from XXX kg or XXX lbs.

(4) The resulting figure equals the available amount of cargo and luggage load capacity. For example, if "XXX" amount equals 1400 lbs. and there will be five 150 lb passengers in your vehicle, the amount of available cargo and luggage load capacity is 650 lbs. (1400-750 (5x150) = 650 lbs.)

(5) Determine the combined weight of luggage and cargo being loaded on the vehicle. That weight may not safely exceed the available cargo and luggage load capacity calculated in Step 4.

(6) If your vehicle will be towing a trailer, load from your trailer will be transferred to your vehicle. Consult this manual to determine how this reduces the available cargo and luggage load capacity of your vehicle.

Metric Example For Load Limit

For example, if "XXX" amount equals 635 kg and there will be five 68 kg passengers in your vehicle, the amount of available cargo and luggage load capacity is 295 kg (635-340 (5x68) = 295 kg) as shown in step 4.

NOTE:

- If your vehicle will be towing a trailer, load from your trailer will be transferred to your vehicle. The following table shows examples on how to calculate total load, cargo/luggage, and towing capacities of your vehicle with varying seating configurations and number and size of occupants. This table is for illustration purposes only and may not be accurate for the seating and load carry capacity of your vehicle.
- For the following example, the combined weight of occupants and cargo should never exceed 865 lbs (392 kg).

Occupants			Combined weight of occupants and cargo from Tire Placard	MINUS	Combined Occupant's weight	=	AVAILABLE Cargo/Luggage and Trailer Tongue Weight
TOTAL	FRONT	REAR					
EXAMPLE 1							
5	2	3			Occupant 1: 200 lbs Occupant 2: 130 lbs Occupant 3: 160 lbs Occupant 4: 100 lbs Occupant 5: 80 lbs TOTAL WEIGHT: 670 lbs		
			865 lbs	minus	670 lbs	=	195 lbs
EXAMPLE 2							
3	2	1			Occupant 1: 210 lbs Occupant 2: 180 lbs Occupant 3: 150 lbs TOTAL WEIGHT: 540 lbs		
			865 lbs	minus	540 lbs	=	325 lbs
EXAMPLE 3							
2	2	0			Occupant 1: 200 lbs Occupant 2: 200 lbs TOTAL WEIGHT: 400 lbs		
			865 lbs	minus	400 lbs	=	465 lbs

EXAMPLE

811a4d11

WARNING!

Overloading of your tires is dangerous. Overloading can cause tire failure, affect vehicle handling, and increase your stopping distance. Use tires of the recommended load capacity for your vehicle. Never overload them.

Tires — General Information

Tire Pressure

Proper tire inflation pressure is essential to the safe and satisfactory operation of your vehicle. Four primary areas are affected by improper tire pressure:

- Safety
- Fuel Economy
- Tread Wear
- Ride Comfort and Vehicle Stability

Safety

WARNING!

- **Improperly inflated tires are dangerous and can cause collisions.**
- **Underinflation increases tire flexing and can result in overheating and tire failure.**
- **Overinflation reduces a tire's ability to cushion shock. Objects on the road and chuckholes can cause damage that result in tire failure.**

(Continued)

WARNING! *(Continued)*

- **Overinflated or underinflated tires can affect vehicle handling and can fail suddenly, resulting in loss of vehicle control.**
- **Unequal tire pressures can cause steering problems. You could lose control of your vehicle.**
- **Unequal tire pressures from one side of the vehicle to the other can cause the vehicle to drift to the right or left.**
- **Always drive with each tire inflated to the recommended cold tire inflation pressure.**

Both under-inflation and over-inflation affect the stability of the vehicle and can produce a feeling of sluggish response or over responsiveness in the steering.

NOTE:

- Unequal tire pressures from side to side may cause erratic and unpredictable steering response.
- Unequal tire pressure from side to side may cause the vehicle to drift left or right.

Fuel Economy

Underinflated tires will increase tire rolling resistance resulting in higher fuel consumption.

Tread Wear

Improper cold tire inflation pressures can cause abnormal wear patterns and reduced tread life, resulting in the need for earlier tire replacement.

Ride Comfort And Vehicle Stability

Proper tire inflation contributes to a comfortable ride. Over-inflation produces a jarring and uncomfortable ride.

Tire Inflation Pressures

The proper cold tire inflation pressure is listed on the driver's side B-Pillar or rear edge of the driver's side door.

At least once a month:

- Check and adjust tire pressure with a good quality pocket-type pressure gauge. Do not make a visual judgement when determining proper inflation. Tires may look properly inflated even when they are under-inflated.
- Inspect tires for signs of tire wear or visible damage.

CAUTION!
After inspecting or adjusting the tire pressure, always reinstall the valve stem cap. This will prevent moisture and dirt from entering the valve stem, which could damage the valve stem.

Inflation pressures specified on the placard are always “cold tire inflation pressure”. Cold tire inflation pressure is defined as the tire pressure after the vehicle has not been driven for at least three hours, or driven less than 1 mile (1.6 km) after sitting for a minimum of three hours. The cold tire inflation pressure must not exceed the maximum inflation pressure molded into the tire sidewall.

Check tire pressures more often if subject to a wide range of outdoor temperatures, as tire pressures vary with temperature changes.

Tire pressures change by approximately 1 psi (7 kPa) per 12°F (7°C) of air temperature change. Keep this in mind when checking tire pressure inside a garage, especially in the Winter.

Example: If garage temperature = 68°F (20°C), and the outside temperature = 32°F (0°C), then the cold tire inflation pressure should be increased by 3 psi (21 kPa), which equals 1 psi (7 kPa) for every 12°F (7°C) for this outside temperature condition.

Tire pressure may increase from 2 to 6 psi (13 to 40 kPa) during operation. DO NOT reduce this normal pressure build up or your tire pressure will be too low.

Tire Pressures For High Speed Operation

The manufacturer advocates driving at safe speeds and within posted speed limits. Where speed limits or conditions are such that the vehicle can be driven at high speeds, maintaining correct tire inflation pressure is very important. Increased tire pressure and reduced vehicle loading may be required for high-speed vehicle operation. Refer to an authorized tire dealer or original equipment vehicle dealer for recommended safe operating speeds, loading, and cold tire inflation pressures.

WARNING!
High speed driving with your vehicle under maximum load is dangerous. The added strain on your tires could cause them to fail. You could have a serious collision. Do not drive a vehicle loaded to the maximum capacity at continuous speeds above 75 mph (120 km/h).

Radial Ply Tires

WARNING!
Combining radial ply tires with other types of tires on your vehicle will cause your vehicle to handle poorly. The instability could cause a collision. Always use radial ply tires in sets of four. Never combine them with other types of tires.

Tire Repair

If your tire becomes damaged, it may be repaired if it meets the following criteria:

- The tire has not been driven on when flat.
- The damage is only on the tread section of your tire (sidewall damage is not repairable).
- The puncture is no greater than a ¼ of an inch (6 mm).

Consult an authorized tire dealer for tire repairs and additional information.

If equipped with Run Flat tires, and they are damaged, or experience a loss of pressure, should be replaced immediately with another Run Flat tire of identical size and service description (Load Index and Speed Symbol). Replace the tire pressure sensor as well as it is not designed to be reused.

Run Flat Tires — If Equipped

Run Flat tires allow you the capability to drive 50 miles (80 km) at 50 mph (80 km/h) after a rapid loss of inflation pressure. This rapid loss of inflation is referred to as the Run Flat mode. A Run Flat mode occurs when the tire inflation pressure is of/or below 14 psi (96 kPa). Once a Run Flat tire reaches the run flat mode it has limited driving capabilities and needs to be replaced immediately. A Run Flat tire is not repairable. When a run flat tire is changed after driving with underinflated tire condition, please replace the Tire Pressure Monitoring (TPM) sensor, as it is not designed to be reused when driven under run flat mode (14 psi (96 kPa)) condition.

NOTE:
TPM Sensor must be replaced after driving the vehicle on a flat tire condition.

It is not recommended driving a vehicle loaded at full capacity or to tow a trailer while a tire is in the run flat mode.

See the tire pressure monitoring section for more information.

Tire Spinning

When stuck in mud, sand, snow, or ice conditions, do not spin your vehicle's wheels above 30 mph (48 km/h), or for longer than 30 seconds continuously without stopping.

Refer to “Freeing A Stuck Vehicle” in “In Case Of Emergency” for further information.

WARNING!
Fast spinning tires can be dangerous. Forces generated by excessive wheel speeds may cause tire damage or failure. A tire could explode and injure someone. Do not spin your vehicle's wheels faster than 30 mph (48 km/h) for more than 30 seconds continuously when you are stuck, and do not let anyone near a spinning wheel, no matter what the speed.

Tread Wear Indicators

Tread wear indicators are in the original equipment tires to help you in determining when your tires should be replaced.

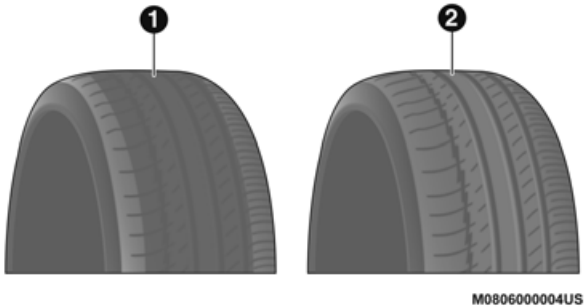

Tire Tread

1 — Worn Tire
2 — New Tire

These indicators are molded into the bottom of the tread grooves. They will appear as bands when the tread depth becomes a 1/16 of an inch (1.6 mm). When the tread is worn to the tread wear indicators, the tire should be replaced.

Refer to "Replacement Tires" in this section for further information.

Life Of Tire

The service life of a tire is dependent upon varying factors including, but not limited to:

- Driving style
- Tire pressure — Improper cold tire inflation pressures can cause uneven wear patterns to develop across the tire tread. These abnormal wear patterns will reduce tread life, resulting in the need for earlier tire replacement
- Distance driven
- Performance tires, tires with a speed rating of V or higher, and Summer tires typically have a reduced tread life. Rotation of these tires per the vehicle scheduled maintenance is highly recommended

WARNING!
Tires and the spare tire should be replaced after six years, regardless of the remaining tread. Failure to follow this warning can result in sudden tire failure. You could lose control and have a collision resulting in serious injury or death.

NOTE:
Wheel Valve Stem must be replaced as well when installing new tires due to wear and tear in existing tires.

Keep dismounted tires in a cool, dry place with as little exposure to light as possible. Protect tires from contact with oil, grease, and gasoline.

Replacement Tires

The tires on your new vehicle provide a balance of many characteristics. They should be inspected regularly for wear and correct cold tire inflation pressures. The manufacturer strongly recommends that you use tires equivalent to the originals in size, quality, and performance when replacement is needed. Refer to the paragraph on "Tread Wear Indicators" in this section. Refer to the Tire and Loading Information placard or the Vehicle Certification Label for the size designation of your tire. The Load Index and Speed Symbol for your tire will be found on the original equipment tire sidewall.

See the Tire Sizing Chart example found in the "Tire Safety Information" section of this manual for more information relating to the Load Index and Speed Symbol of a tire.

It is recommended to replace the two front tires or two rear tires as a pair. Replacing just one tire can seriously affect your vehicle's handling. If you ever replace a wheel, make sure that the wheel's specifications match those of the original wheels.

It is recommended you contact an authorized tire dealer or original equipment dealer with any questions you may have on tire specifications or capability. Failure to use equivalent replacement tires may adversely affect the safety, handling, and ride of your vehicle.

WARNING!

- **Do not use a tire, wheel size, load rating, or speed rating other than that specified for your vehicle. Some combinations of unapproved tires and wheels may change suspension dimensions and performance characteristics, resulting in changes to steering, handling, and braking of your vehicle. This can cause unpredictable handling and stress to steering and suspension components. You could lose control and have a collision resulting in serious injury or death. Use only the tire and wheel sizes with load ratings approved for your vehicle.**

(Continued)

WARNING! *(Continued)*

- **Never use a tire with a smaller load index or capacity, other than what was originally equipped on your vehicle. Using a tire with a smaller load index could result in tire overloading and failure. You could lose control and have a collision.**
- **Failure to equip your vehicle with tires having adequate speed capability can result in sudden tire failure and loss of vehicle control.**

CAUTION!

Replacing original tires with tires of a different size may result in false speedometer and odometer readings.

Tire Types

All Season Tires — If Equipped

All Season tires provide traction for all seasons (Spring, Summer, Autumn, and Winter). Traction levels may vary between different all season tires. All season tires can be identified by the M+S, M&S, M/S or MS designation on the tire sidewall. Use all season tires only in sets of four; failure to do so may adversely affect the safety and handling of your vehicle.

Summer Or Three Season Tires — If Equipped

Summer tires provide traction in both wet and dry conditions, and are not intended to be driven in snow or on ice. If your vehicle is equipped with Summer tires, be aware, these tires are not designed for Winter or cold driving conditions. Install Winter tires on your vehicle when ambient temperatures are less than 40°F (5°C), or if roads are covered with ice or snow. For more information, contact an authorized dealer.

Summer tires do not contain the all season designation or mountain/snowflake symbol on the tire sidewall. Use Summer tires only in sets of four; failure to do so may adversely affect the safety and handling of your vehicle.

WARNING!

Do not use Summer tires in snow/ice conditions. You could lose vehicle control, resulting in severe injury or death. Driving too fast for conditions also creates the possibility of loss of vehicle control.

Snow Tires

Some areas of the country require the use of snow tires during the Winter. Snow tires can be identified by a "mountain/snowflake" symbol on the tire sidewall.

If you need snow tires, select tires that are equivalent in size and type to the original equipment tires. Use snow tires only in sets of four; failure to do so may adversely affect the safety and handling of your vehicle.

Snow tires generally have lower speed ratings than what was originally equipped with your vehicle and should not be operated at sustained speeds over 75 mph (120 km/h). For speeds above 75 mph (120 km/h), refer to original equipment or an authorized tire dealer for recommended safe operating speeds, loading and cold tire inflation pressures.

While studded tires improve performance on ice, skid and traction capability on wet or dry surfaces may be poorer than that of non-studded tires. Some states prohibit studded tires; therefore, local laws should be checked before using these tire types.

Spare Tires — If Equipped

NOTE:
For vehicles equipped with Tire Service Kit instead of a spare tire, please refer to "Tire Service Kit" in "In Case Of Emergency" for further information.

CAUTION!
Because of the reduced ground clearance, do not take your vehicle through an automatic car wash with a compact or limited use temporary spare installed. Damage to the vehicle may result.

Refer to the "Towing Requirements - Tires" in "Starting And Operating" for restrictions when towing with a spare tire designated for temporary emergency use.

Spare Tire Matching Original Equipped Tire And Wheel — If Equipped

Your vehicle may be equipped with a spare tire and wheel equivalent in look and function to the original equipment tire and wheel found on the front or rear axle of your vehicle. This spare tire may be used in the tire rotation for your vehicle. If your vehicle has this option, refer to an authorized tire dealer for the recommended tire rotation pattern.

Compact Spare Tire — If Equipped

The compact spare is for temporary emergency use only. You can identify if your vehicle is equipped with a compact spare by looking at the spare tire description on the Tire and Loading Information Placard located on the driver's side door opening or on the sidewall of the tire. Compact spare tire descriptions begin with the letter "T" or "S" preceding the size designation. Example: T145/80D18 103M.

T, S = Temporary Spare Tire

Since this tire has limited tread life, the original equipment tire should be repaired (or replaced) and reinstalled on your vehicle at the first opportunity.

Do not install a wheel cover or attempt to mount a conventional tire on the compact spare wheel, since the wheel is designed specifically for the compact spare tire. Do not install more than one compact spare tire and wheel on the vehicle at any given time.

WARNING!
Compact and collapsible spares are for temporary emergency use only. With these spares, do not drive more than 50 mph (80 km/h). Temporary use spares have limited tread life. When the tread is worn to the tread wear indicators, the temporary use spare tire needs to be replaced. Be sure to follow the warnings, which apply to your spare. Failure to do so could result in spare tire failure and loss of vehicle control.

Full Size Spare — If Equipped

The full size spare is for temporary emergency use only. This tire may look like the originally equipped tire on the front or rear axle of your vehicle, but it is not. This spare tire may have limited tread life. When the tread is worn to the tread wear indicators, the temporary use full size spare tire needs to be replaced. Since it is not the same as your original equipment tire, replace (or repair) the original equipment tire and reinstall on the vehicle at the first opportunity.

Limited Use Spare — If Equipped

The limited use spare tire is for temporary emergency use only. This tire is identified by a label located on the limited use spare wheel. This label contains the driving limitations for this spare. This tire may look like the original equipped tire on the front or rear axle of your vehicle, but it is not. Installation of this limited use spare tire affects vehicle handling. Since it is not the same as your original equipment tire, replace (or repair) the original equipment tire and reinstall on the vehicle at the first opportunity.

WARNING!
Limited use spares are for emergency use only. Installation of this limited use spare tire affects vehicle handling. With this tire, do not drive more than the speed listed on the limited use spare wheel. Keep inflated to the cold tire inflation pressures listed on your Tire and Loading Information Placard located on the driver's side B-Pillar or the rear edge of the driver's side door. Replace (or repair) the original equipment tire at the first opportunity and reinstall it on your vehicle. Failure to do so could result in loss of vehicle control.

Wheel And Wheel Trim Care

All wheels and wheel trim, especially aluminum and chrome plated wheels, should be cleaned regularly using mild (neutral Ph) soap and water to maintain their luster and to prevent corrosion. Wash wheels with the same soap solution recommended for the body of the vehicle, and remember to always wash when the surfaces are not hot to the touch.

Your wheels are susceptible to deterioration caused by salt, sodium chloride, magnesium chloride, calcium chloride, etc., and other road chemicals used to melt ice or control dust on dirt roads. Use a soft cloth or sponge and mild soap to wipe away promptly. Do not use harsh chemicals or a stiff brush. They can damage the wheel's protective coating that helps keep them from corroding and tarnishing.

CAUTION!
Avoid products or automatic car washes that use acidic solutions or strong alkaline additives or harsh brushes. Many aftermarket wheel cleaners and automatic car washes may damage the wheel's protective finish. Such damage is not covered by the New Vehicle Limited Warranty. Only car wash soap, Mopar Wheel Cleaner or equivalent is recommended.

When cleaning extremely dirty wheels, including excessive brake dust, care must be taken in the selection of tire and wheel cleaning chemicals and equipment to prevent damage to the wheels. Mopar Wheel Treatment or Mopar Chrome Cleaner, or their equivalent, is recommended or select a non-abrasive, non-acidic cleaner for aluminum or chrome wheels.

CAUTION!
Do not use scouring pads, steel wool, a bristle brush, metal polishes, or oven cleaner. These products may damage the wheel's protective finish. Such damage is not covered by the New Vehicle Limited Warranty. Only car wash soap, Mopar Wheel Cleaner or equivalent is recommended.

NOTE:
If you intend parking or storing your vehicle for an extended period after cleaning the wheels with wheel cleaner, drive your vehicle and apply the brakes to remove the water droplets from the brake components. This activity will remove the red rust on the brake rotors and prevent vehicle vibration when braking.

Dark Vapor Chrome, Black Satin Chrome, or Low Gloss Clear Coat Wheels

CAUTION!
If your vehicle is equipped with these specialty wheels, DO NOT USE wheel cleaners, abrasives, or polishing compounds. They will permanently damage this finish and such damage is not covered by the New Vehicle Limited Warranty. HAND WASH ONLY USING MILD SOAP AND WATER WITH A SOFT CLOTH. Used on a regular basis; this is all that is required to maintain this finish.

Tire Chains (Traction Devices)

Use of traction devices require sufficient tire-to-body clearance. Follow these recommendations to guard against damage.

- Traction device must be of proper size for the tire, as recommended by the traction device manufacturer.
- Install on Rear Tires Only.
- 245/75R17 tire with the use of a traction device that meets the SAE type “Class S” specification is recommended.

WARNING!

Using tires of different size and type (M+S, Snow) between front and rear axles can cause unpredictable handling. You could lose control and have a collision.

CAUTION!

To avoid damage to your vehicle or tires, observe the following precautions:

- **Because of restricted traction device clearance between tires and other suspension components, it is important that only traction devices in good condition are used. Broken devices can cause serious damage. Stop the vehicle immediately if noise occurs that could indicate device breakage. Remove the damaged parts of the device before further use.**
- **Install device as tightly as possible and then retighten after driving about ½ mile (0.8 km).**
- **Do not exceed 30 mph (48 km/h).**
- **Drive cautiously and avoid severe turns and large bumps, especially with a loaded vehicle.**
- **Do not drive for a prolonged period on dry pavement.**

(Continued)

CAUTION! ***(Continued)***

- **Observe the traction device manufacturer's instructions on the method of installation, operating speed, and conditions for use. Always use the suggested operating speed of the device manufacturer's if it is less than 30 mph (48 km/h).**
- **Do not use traction devices on a compact spare tire.**

Tire Rotation Recommendations

The tires on the front and rear of your vehicle operate at different loads and perform different steering, handling, and braking functions. For these reasons, they wear at unequal rates.

These effects can be reduced by timely rotation of tires. The benefits of rotation are especially worthwhile with aggressive tread designs such as those on On/Off Road type tires. Rotation will increase tread life, help to maintain mud, snow, and wet traction levels, and contribute to a smooth, quiet ride.

Refer to the "Maintenance Plan" located in "Scheduled Servicing" in "Servicing And Maintenance" for the proper maintenance intervals. The reasons for any rapid or unusual wear should be corrected prior to rotation being performed.

The suggested rotation method is the "rearward-cross" shown in the following diagram.

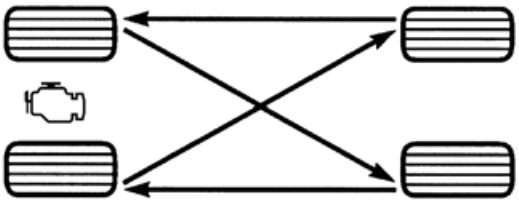

055703771

Tire Rotation

CAUTION!
Proper operation of four-wheel drive vehicles depends on tires of equal size, type, and circumference on each wheel. Any difference in tire size can cause damage to the transfer case. Tire rotation schedule should be followed to balance tire wear.

DEPARTMENT OF TRANSPORTATION UNIFORM TIRE QUALITY GRADES

The following tire grading categories were established by the National Highway Traffic Safety Administration. The specific grade rating assigned by the tire's manufacturer in each category is shown on the sidewall of the tires on your vehicle.

All passenger vehicle tires must conform to Federal safety requirements in addition to these grades.

Treadwear

The Treadwear grade is a comparative rating, based on the wear rate of the tire when tested under controlled conditions on a specified government test course. For example, a tire graded 150 would wear one and one-half times as well on the government course as a tire graded 100. The relative performance of tires depends upon the actual conditions of their use, however, and may depart significantly from the norm due to variations in driving habits, service practices, and differences in road characteristics and climate.

Traction Grades

The Traction grades, from highest to lowest, are AA, A, B, and C. These grades represent the tire's ability to stop on wet pavement, as measured under controlled conditions on specified government test surfaces of asphalt and concrete. A tire marked C may have poor traction performance.

WARNING!
The traction grade assigned to this tire is based on straight-ahead braking traction tests, and does not include acceleration, cornering, hydroplaning, or peak traction characteristics.

Temperature Grades

The Temperature grades are A (the highest), B, and C, representing the tire's resistance to the generation of heat and its ability to dissipate heat, when tested under controlled conditions on a specified indoor laboratory test wheel.

Sustained high temperature can cause the material of the tire to degenerate and reduce tire life, and excessive temperature can lead to sudden tire failure. The grade C corresponds to a level of performance, which all passenger vehicle tires must meet under the Federal Motor Vehicle Safety Standard No. 109. Grades B and A represent higher levels of performance on the laboratory test wheel, than the minimum required by law.

WARNING!
The temperature grade for this tire is established for a tire that is properly inflated and not overloaded. Excessive speed, under-inflation, or excessive loading, either separately or in combination, can cause heat buildup and possible tire failure.

STORING THE VEHICLE

WARNING!
• **Take care to avoid the radiator cooling fan whenever the hood is raised. It can start anytime the ignition switch is ON. You can be injured by moving fan blades.** • **Remove any metal jewelry such as rings, watch bands and bracelets that could make an inadvertent electrical contact. You could be seriously injured.**

(Continued)

WARNING! *(Continued)*

- **Vehicles with the Stop/Start system will be equipped with two batteries. Both the main and the supplemental batteries must be disconnected to completely de-energize the 12 volt electrical system.**
- **Serious injury or death could result if you do not disconnect both batteries. To learn how to properly disconnect, see your authorized dealer.**

CAUTION!

If the negative battery cables are not isolated properly it can cause a potential power spike or surge in the system, resulting in damage to essential electrical components.

If you are storing your vehicle for more than 21 days, we recommend that you take the following steps to minimize the drain on your vehicle's battery:

- Disconnect the negative cable from the battery.
- If your vehicle is equipped with Stop/Start system then disconnect both the main and supplemental negative battery cables.
- Any time you store your vehicle or keep it out of service (i.e., vacation) for two weeks or more, run the air conditioning system at idle for about five minutes in the fresh air and high blower setting. This will ensure adequate system lubrication to minimize the possibility of compressor damage when the system is started again.
- If assistance is needed to disconnect the battery system, see your authorized dealer.

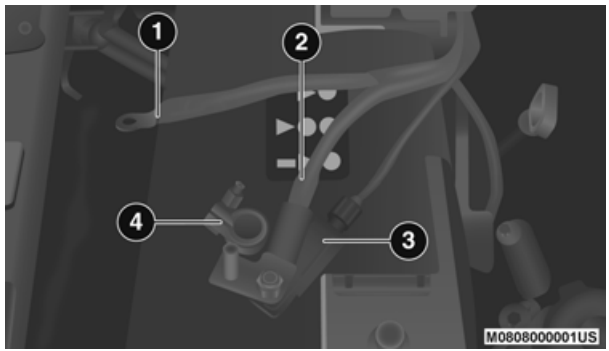

Battery Cable Disconnect

1 — Supplemental Negative Battery Cable
2 — Main Negative Battery Cable
3 — Intelligent Battery Sensor (IBS)
4 — Main Negative Battery Terminal

NOTE:

- You must isolate the supplemental battery connection point, as well as the main battery terminal from the post, as shown in the image, to fully de-energize both batteries for storage. If assistance is needed to disconnect the battery system, see your authorized dealer.
- Do not disconnect the Intelligent Battery Sensor (IBS), or your Stop/Start system may not function for up to 24 hours, due to the IBS being set into learn mode.

BODYWORK

Protection From Atmospheric Agents

Vehicle body care requirements vary according to geographic locations and usage. Chemicals that make roads passable in snow and ice and those that are sprayed on trees and road surfaces during other seasons are highly corrosive to the metal in your vehicle. Outside parking, which exposes your vehicle to airborne contaminants, road surfaces on which the vehicle is operated, extreme hot or cold weather, and other extreme conditions will have an adverse effect on paint, metal trim, and underbody protection.

The following maintenance recommendations will enable you to obtain maximum benefit from the corrosion resistance built into your vehicle.

What Causes Corrosion?

Corrosion is the result of deterioration or removal of paint and protective coatings from your vehicle.

The most common causes are:

- Road salt, dirt and moisture accumulation
- Stone and gravel impact
- Insects, tree sap and tar
- Salt in the air near seacoast localities
- Atmospheric fallout/industrial pollutants

Body And Underbody Maintenance

Cleaning Headlights

Your vehicle is equipped with plastic headlights and fog lights that are lighter and less susceptible to stone breakage than glass headlights.

Plastic is not as scratch resistant as glass and therefore different lens cleaning procedures must be followed.

To minimize the possibility of scratching the lenses and reducing light output, avoid wiping with a dry cloth. To remove road dirt, wash with a mild soap solution followed by rinsing.

Do not use abrasive cleaning components, solvents, steel wool, or other aggressive material to clean the lenses.

Preserving The Bodywork

Washing

- Wash your vehicle regularly. Always wash your vehicle in the shade using Mopar Car Wash, or a mild car wash soap, and rinse the panels completely with clean water.
- If insects, tar, or other similar deposits have accumulated on your vehicle, use Mopar Super Kleen Bug and Tar Remover to remove.
- Use a high quality cleaner wax, such as Mopar Cleaner Wax, to remove road film and stains, and to protect your paint finish. Take care never to scratch the paint.
- Avoid using abrasive compounds and power buffing that may diminish the gloss or thin out the paint finish.

CAUTION!

- **Do not use abrasive or strong cleaning materials, such as steel wool or scouring powder, that will scratch metal and painted surfaces.**
- **Use of power washers exceeding 1,200 psi (8,274 kPa) can result in damage or removal of paint and decals.**

Special Care

- If you drive on salted or dusty roads or if you drive near the ocean, hose off the undercarriage at least once a month.
- It is important that the drain holes in the lower edges of the doors, rocker panels, and trunk be kept clear and open.
- If you detect any stone chips or scratches in the paint, touch them up immediately. The cost of such repairs is considered the responsibility of the owner.
- If your vehicle is damaged due to a collision or similar cause that destroys the paint and protective coating, have your vehicle repaired as soon as possible. The cost of such repairs is considered the responsibility of the owner.
- If you carry special cargo such as chemicals, fertilizers, de-icer salt, etc., be sure that such materials are well packaged and sealed.
- If a lot of driving is done on gravel roads, consider mud or stone shields behind each wheel.
- Use Mopar Touch Up Paint on scratches as soon as possible. An authorized dealer has touch up paint to match the color of your vehicle.

Appearance Care For Fabric Top Models

To maintain the appearance of your vehicle's interior trim and top, follow these precautions:

- Avoid leaving your vehicle unattended with the top down, as exposure to sun or rain may damage interior trim.
- Do not use harsh cleaners or bleaching agents on top material, as damage may result.
- Do not allow any vinyl cleaner to run down and dry on the paint, leaving a streak.
- After cleaning your vehicle's fabric top, always make sure it is completely dry before lowering.
- Be especially careful when washing the windows by following the directions for “Care of Fabric Top Window” in this section.

Washing – Use Mopar Car Wash or equivalent, or mild soap suds, lukewarm water, and a brush with soft bristles. If extra cleaning is required, use Mopar Convertible Cloth Top Cleaner or equivalent, or a mild foaming cleaner on the entire top, but support the top from underneath.

Rinsing – Be sure to remove all traces of cleaner by rinsing the top thoroughly with clean water. Remember to allow the top to dry before lowering it.

CAUTION!

Failure to follow these cautions may cause interior water damage, stains or mildew on the top material:

- **Avoid high-pressure car washes, as they can damage the top material. Also, increased water pressure may force past the weather strips.**
- **It is recommended that the top be free of water prior to opening it. Operating the top, opening a door or lowering a window while the top is wet may allow water to drip into the vehicle's interior.**
- **Use care when washing the vehicle, water pressure directed at the weather strip seals may cause water to leak into the vehicle's interior.**
- **Careless handling and storage of the removable roof panels may damage the seals, causing water to leak into the vehicle's interior.**
- **The front panel(s) must be positioned properly to ensure sealing. Improper installation can cause water to leak into the vehicle's interior.**

Care Of Fabric Top Window

Your vehicle's fabric top has a pliable plastic window that can be scratched unless special care is taken by following these directions:

- Never use a dry cloth to remove dust. Instead, **use a micro-fiber towel or soft cotton cloth moistened with cold or warm, clean water, and wipe across the window, not up and down.** Mopar Jeep Soft Glass Window Cleaner or equivalent will safely clean the plastic window without scratching. It removes fine scratches to improve visibility and provides UV protection to help prevent yellowing.
- When washing, **never use hot water** or anything stronger than a mild soap. Never use solvents such as alcohol or harsh cleaning agents.
- Always rinse thoroughly with cold water, then wipe with a soft and slightly moist, clean cloth.
- When removing frost, snow, or ice, **never use a scraper or de-icing chemicals.** Use warm water only if you must clean the window quickly.
- Debris (sand, mud/dirt, dust, or salt) from off-road driving will have an impact on plastic retainer operation. Even normal on-road driving and vehicle washing will eventually impact window plastic retainer operation. To maintain ease of use of the window plastic retainers, each window plastic retainer should be cleaned and lubricated regularly. Clean them with a mild soap solution and a small brush. Cleaning products are available through an authorized dealer.
- Never paste stickers, gummed labels or any tape to the windows. Adhesives are hard to remove and may damage the window.

INTERIORS

Carpet Removal

Front Carpets:

1. Remove the front grommets.

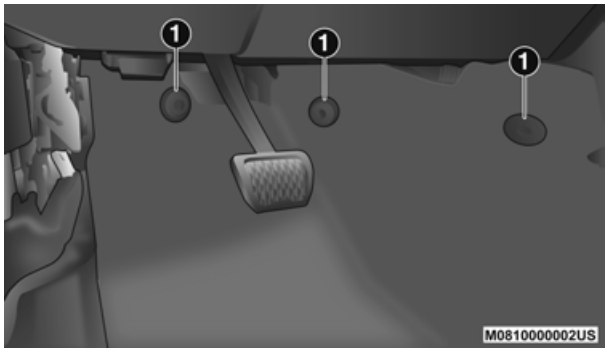

Front Carpet

1 — Grommets

2. Pull the carpet out from the front to the rear.

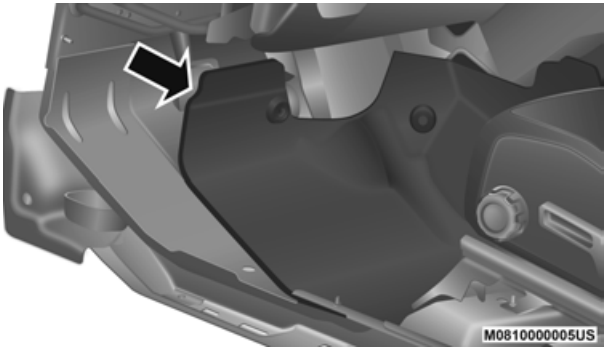

Front Carpet Pulled Away

3. Remove the grommets under the front seat. First for the rear carpet and then the front carpet.

Front And Rear Carpet Split

4. Under the back of the front seat, open the carpet split and then pull out the rear edge and slide the carpet to the front (do not remove the harness).

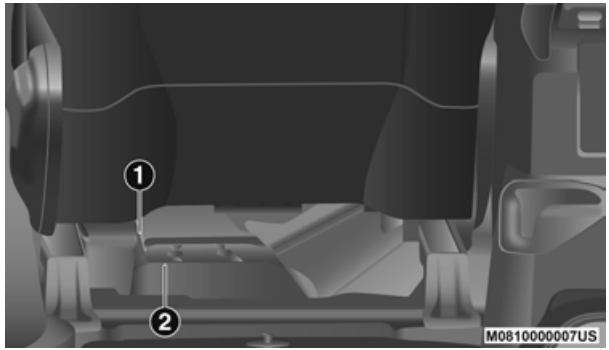

Rear Underside Of Front Seat

1 — Harness
2 — Carpet Split

5. Finally open the carpet split around seat bracket and then remove the last two grommets.

6. When reinstalling carpet, perform these steps in reverse order, making sure that the carpet is tucked under the scuffs, B pillar, and console, and then refasten the grommets.

Rear Carpet

1. Remove the grommets under the front seat (one left and one right).

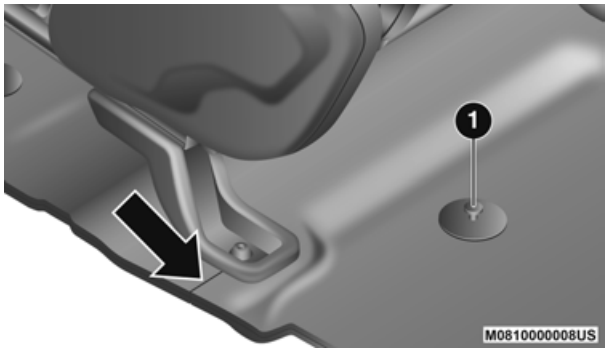

Carpet Split

1 — Grommet

2. Then pull the carpet out, to the rear and open the carpet split around the front seat brackets.
3. Remove the rear Under Seat storage bin (if equipped), by removing the four bolts that hold it to the floor.
4. Remove the fastener bin from the rear floor, it is held in by clips.
5. Remove the jack and tools by turning the wing bolt counterclockwise, remove the wing bolt and then lift the assembly out from under the seat.
6. Lift carpet off of the rear retainers (one left and one right).

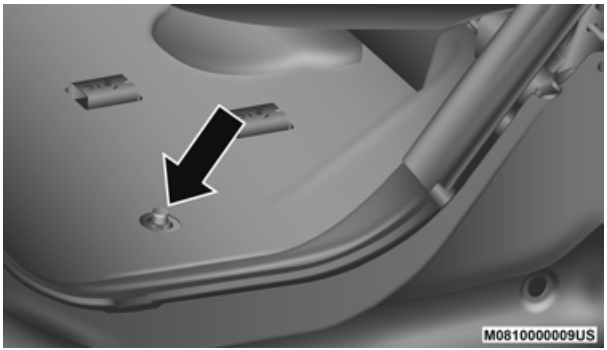

Rear Retainers

7. Remove carpet from the vehicle.
8. When reinstalling the carpet, perform these steps in reverse order making sure that the carpet is tucked under the scuffs, B pillar, console, and then refasten the grommets.

Seats And Fabric Parts

Use Mopar Total Clean to clean fabric upholstery and carpeting.

WARNING!
Do not use volatile solvents for cleaning purposes. Many are potentially flammable, and if used in closed areas they may cause respiratory harm.

Seat Belt Maintenance

CAUTION!
Do not bleach, dye or clean the belts with chemical solvents or abrasive cleaners. This will weaken the fabric. Sun damage can also weaken the fabric

If the belts need cleaning, use a mild soap solution or lukewarm water. Do not remove the belts from the vehicle to wash them. Dry with a soft cloth.

Replace the belts if they appear frayed or worn or if the buckles do not work properly.

WARNING!
A frayed or torn belt could rip apart in a collision and leave you with no protection. Inspect the belt system periodically, checking for cuts, frays, or loose parts. Damaged parts must be replaced immediately. Do not disassemble or modify the system. Seat belt assemblies must be replaced after a collision if they have been damaged (i.e., bent retractor, torn webbing, etc.).

Plastic And Coated Parts

Use Mopar Total Clean to clean vinyl upholstery.

CAUTION!
• **Direct contact of air fresheners, insect repellents, suntan lotions, or hand sanitizers to the plastic, painted, or decorated surfaces of the interior may cause permanent damage. Wipe away immediately.** • **Damage caused by these type of products may not be covered by your New Vehicle Limited Warranty.**

Cleaning Plastic Instrument Cluster Lenses

The lenses in front of the instruments in this vehicle are molded in clear plastic. When cleaning the lenses, care must be taken to avoid scratching the plastic.

1. Clean with a wet soft cloth. A mild soap solution may be used, but do not use high alcohol content or abrasive cleaners. If soap is used, wipe clean with a clean damp cloth.
2. Dry with a soft cloth.

Leather Parts

Mopar Total Clean is specifically recommended for leather upholstery.

Your leather upholstery can be best preserved by regular cleaning with a damp soft cloth. Small particles of dirt can act as an abrasive and damage the leather upholstery and should be removed promptly with a damp cloth. Stubborn soils can be removed easily with a soft cloth and Mopar Total Clean. Care should be taken to avoid soaking your leather upholstery with any liquid. Please do not use polishes, oils, cleaning fluids, solvents, detergents, or ammonia-based cleaners to clean your leather upholstery. Application of a leather conditioner is not required to maintain the original condition.

NOTE:
If equipped with light colored leather, it tends to show any foreign material, dirt, and fabric dye transfer more so than darker colors. The leather is designed for easy cleaning, and FCA recommends Mopar Total Clean leather cleaner applied on a cloth to clean the leather seats as needed.

CAUTION!
Do not use Alcohol and Alcohol-based and/or Ketone based cleaning products to clean leather upholstery, as damage to the upholstery may result.

Glass Surfaces

All glass surfaces should be cleaned on a regular basis with Mopar Glass Cleaner, or any commercial household-type glass cleaner. Never use an abrasive type cleaner. Use caution when cleaning the inside rear window equipped with electric defrosters or windows equipped with radio antennas. Do not use scrapers or other sharp instruments that may scratch the elements.

When cleaning the rear view mirror, spray cleaner on the towel or cloth that you are using. Do not spray cleaner directly on the mirror.

TECHNICAL SPECIFICATIONS

VEHICLE IDENTIFICATION NUMBER

The Vehicle Identification Number (VIN) is found on the left front corner of the A pillar, visible from outside of the vehicle through the windshield. This number also appears underbody, on the right side of the frame rail near the center of the vehicle, as well as on the Automobile Information Disclosure Label affixed to a window on your vehicle. Save this label for a convenient record of your vehicle identification number and optional equipment.

The VIN is also stamped on either right or left hand side of the engine block.

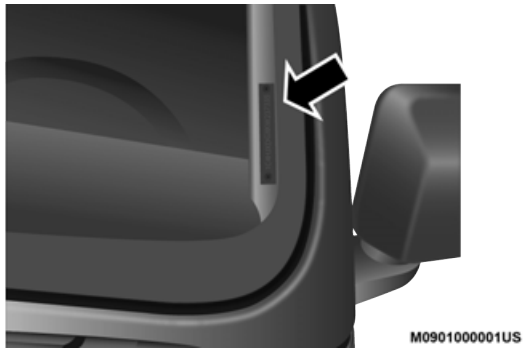

Vehicle Identification Number

NOTE:
It is illegal to remove or alter the VIN plate.

BRAKE SYSTEM

Your vehicle is equipped with dual hydraulic brake systems. If either of the two hydraulic systems loses normal capability, the remaining system will still function. However, there will be some loss of overall braking effectiveness. You may notice increased pedal travel during application, greater pedal force required to slow or stop, and potential activation of the Brake Warning Light.

In the event power assist is lost for any reason (i.e., repeated brake applications with the engine off) the brakes will still function. However, the effort required to brake the vehicle will be much greater than that required with the power system operating.

WHEEL AND TIRE TORQUE SPECIFICATIONS

Proper lug nut/bolt torque is very important to ensure that the wheel is properly mounted to the vehicle. Any time a wheel has been removed and reinstalled on the vehicle, the lug nuts/bolts should be torqued using a properly calibrated torque wrench using a high quality six sided (hex) deep wall socket.

Torque Specifications

Lug Nut/Bolt Torque	**Lug Nut/Bolt Size	Lug Nut/Bolt Socket Size
130 Ft-Lbs (176 N·m)	M14 x 1.50 mm	22 mm

**Use only your authorized dealer recommended lug nuts/bolts and clean or remove any dirt or oil before tightening.

Inspect the wheel mounting surface prior to mounting the tire and remove any corrosion or loose particles.

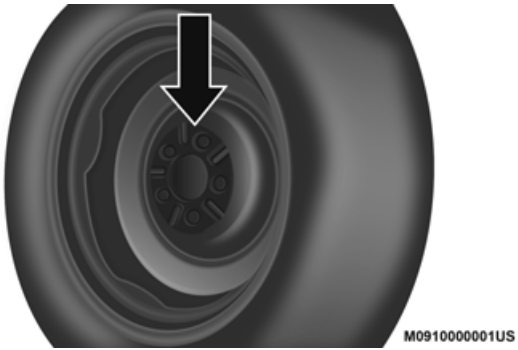

Wheel Mounting Surface

Tighten the lug nuts/bolts in a star pattern until each nut/bolt has been tightened twice. Ensure that the socket is fully engaged on the lug nut/bolt (do not insert it halfway).

Torque Patterns

After 25 miles (40 km), check the lug nut/bolt torque to be sure that all the lug nuts/bolts are properly seated against the wheel.

WARNING!
To avoid the risk of forcing the vehicle off the jack, do not tighten the lug nuts/bolts fully until the vehicle has been lowered. Failure to follow this warning may result in personal injury.

FUEL REQUIREMENTS

3.6L Engine

This engine is designed to meet all emissions regulations and provide excellent fuel economy and performance when using high-quality unleaded "Regular" gasoline having an octane rating of 87 as specified by the (R+M)/2 method. The use of higher octane "Premium" gasoline will not provide any benefit over "Regular" gasoline in these engines.

While operating on gasoline with an octane number of 87, hearing a light knocking sound from the engine is not a cause for concern. However, if the engine is heard making a heavy knocking sound, see your dealer immediately. Use of gasoline with an octane number lower than 87 can cause engine failure and may void or not be covered by the New Vehicle Limited Warranty.

Poor quality gasoline can cause problems such as hard starting, stalling, and hesitations. If you experience these symptoms, try another brand of gasoline before considering service for the vehicle.

Reformulated Gasoline

Many areas of the country require the use of cleaner burning gasoline referred to as "Reformulated Gasoline". Reformulated gasoline contains oxygenates and are specifically blended to reduce vehicle emissions and improve air quality.

The use of reformulated gasoline is recommended. Properly blended reformulated gasoline will provide improved performance and durability of engine and fuel system components.

Materials Added To Fuel

Besides using unleaded gasoline with the proper octane rating, gasolines that contain detergents, corrosion and stability additives are recommended. Using gasolines that have these additives will help improve fuel economy, reduce emissions, and maintain vehicle performance.

Designated TOP TIER Detergent Gasoline contains a higher level of detergents to further aide in minimizing engine and fuel system deposits. When available, the usage of TOP TIER Detergent gasoline is recommended. Visit www.toptiergas.com for a list of TOP TIER Detergent Gasoline Retailers.

Indiscriminate use of fuel system cleaning agents should be avoided. Many of these materials intended for gum and varnish removal may contain active solvents or similar ingredients. These can harm fuel system gasket and diaphragm materials.

Gasoline/Oxygenate Blends

Some fuel suppliers blend unleaded gasoline with oxygenates such as ethanol.

CAUTION!
DO NOT use E-85, gasoline containing methanol, or gasoline containing more than 15% ethanol (E-15). Use of these blends may result in starting and drivability problems, damage critical fuel system components, cause emissions to exceed the applicable standard, and/or cause the Malfunction Indicator Light to illuminate. Please observe pump labels as they should clearly communicate if a fuel contains greater than 15% ethanol (E-15).

Problems that result from using gasoline containing more than 15% ethanol (E-15) or gasoline containing methanol are not the responsibility of the manufacturer and may void or not be covered under New Vehicle Limited Warranty.

Do Not Use E-85 In Non-Flex Fuel Vehicles

Non-Flex Fuel Vehicles (FFV) are compatible with gasoline containing up to 15% ethanol (E-15). Use of gasoline with higher ethanol content may void the New Vehicle Limited Warranty.

If a Non-FFV vehicle is inadvertently fueled with E-85 fuel, the engine will have some or all of these symptoms:

- Operate in a lean mode.
- OBD II Malfunction Indicator Light on.
- Poor engine performance.
- Poor cold start and cold drivability.
- Increased risk for fuel system component corrosion.

CNG And LP Fuel System Modifications

Modifications that allow the engine to run on Compressed Natural Gas (CNG) or Liquid Propane (LP) may result in damage to the engine, emissions, and fuel system components. Problems that result from running CNG or LP are not the responsibility of the manufacturer and may void or not be covered under the New Vehicle Limited Warranty.

MMT In Gasoline

Methylcyclopentadienyl Manganese Tricarbonyl (MMT) is a manganese-containing metallic additive that is blended into some gasoline to increase octane. Gasoline blended with MMT provides no performance advantage beyond gasoline of the same octane number without MMT. Gasoline blended with MMT reduces spark plug life and reduces emissions system performance in some vehicles. The manufacturer recommends that gasoline without MMT be used in your vehicle. The MMT content of gasoline may not be indicated on the gasoline pump; therefore, you should ask your gasoline retailer whether the gasoline contains MMT. MMT is prohibited in Federal law and California reformulated gasoline.

Fuel System Cautions

CAUTION!

Follow these guidelines to maintain your vehicle's performance:

- **The use of leaded gasoline is prohibited by Federal law. Using leaded gasoline can impair engine performance and damage the emissions control system.**
- **An out-of-tune engine, certain fuel or ignition malfunctions can cause the catalytic converter to overheat. If you notice a pungent burning odor or some light smoke, your engine may be out-of-tune or malfunctioning and may require immediate service. Contact an authorized dealer for service assistance.**
- **The use of fuel additives, which are now being sold as octane enhancers, is not recommended. Most of these products contain high concentrations of methanol. Fuel system damage or vehicle performance problems resulting from the use of such fuels or additives is not the responsibility of the manufacturer and may void or not be covered under the New Vehicle Limited Warranty.**

NOTE:
Intentional tampering with the emissions control system can result in civil penalties being assessed against you.

Carbon Monoxide Warnings

WARNING!

Carbon monoxide (CO) in exhaust gases is deadly. Follow the precautions below to prevent carbon monoxide poisoning:

- **Do not inhale exhaust gases. They contain carbon monoxide, a colorless and odorless gas, which can kill. Never run the engine in a closed area, such as a garage, and never sit in a parked vehicle with the engine running for an extended period. If the vehicle is stopped in an open area with the engine running for more than a short period, adjust the ventilation system to force fresh, outside air into the vehicle.**

(Continued)

WARNING! *(Continued)*

- **Guard against carbon monoxide with proper maintenance. Have the exhaust system inspected every time the vehicle is raised. Have any abnormal conditions repaired promptly. Until repaired, drive with all side windows fully open.**

FLUID CAPACITIES

	U.S.	Metric
Fuel (Approximate)	22 Gallons	83 Liters
Engine Oil with Filter		
3.6L Engine	5 Quarts	4.73 Liters
Cooling System *		
3.6L Engine (Mopar Antifreeze/Engine Coolant 10 Year/150,000 Mile Formula or equivalent)	11.2 Quarts	10.6 Liters
*Includes coolant recovery bottle filled to MAX level.		

FLUIDS AND LUBRICANTS

Engine

Component	Fluid, Lubricant, or Genuine Part
Engine Coolant	We recommend you use Mopar Antifreeze/Coolant 10 Year/150,000 Mile Formula OAT (Organic Additive Technology) or equivalent meeting the requirements of FCA Material Standard MS.90032.
Engine Oil — 3.6L Engine	We recommend you use API Certified SAE 0W-20 Engine Oil, meeting the requirements of FCA Material Standard MS-6395 such as Mopar, Pennzoil, and Shell Helix. Refer to your engine oil filler cap for correct SAE grade.

Component	Fluid, Lubricant, or Genuine Part
Engine Oil Filter	We recommend you use Mopar Engine Oil Filter or equivalent.
Spark Plugs	We recommend you use Mopar Spark Plugs.
Fuel Selection — 3.6L Engine	87 Octane (R+M)/2 Method, 0-15% Ethanol.

CAUTION!

- **Mixing of engine coolant (antifreeze) other than specified Organic Additive Technology (OAT) engine coolant (antifreeze), may result in engine damage and may decrease corrosion protection. Organic Additive Technology (OAT) engine coolant is different and should not be mixed with Hybrid Organic Additive Technology (HOAT) engine coolant (antifreeze) or any "globally compatible" coolant (antifreeze). If a non-OAT engine coolant (antifreeze) is introduced into the cooling system in an emergency, the cooling system will need to be drained, flushed, and refilled with fresh OAT coolant (conforming to MS.90032), by an authorized dealer as soon as possible.**

(Continued)

CAUTION! *(Continued)*

- **Do not use water alone or alcohol-based engine coolant (antifreeze) products. Do not use additional rust inhibitors or antirust products, as they may not be compatible with the radiator engine coolant and may plug the radiator.**
- **This vehicle has not been designed for use with propylene glycol-based engine coolant (antifreeze). Use of propylene glycol-based engine coolant (antifreeze) is not recommended.**

Chassis

Component	Fluid, Lubricant, or Genuine Part
Automatic Transmission – If Equipped	Use only Mopar ZF 8 & 9 Speed ATF Automatic Transmission Fluid or equivalent. Failure to use the correct fluid may affect the function or performance of your transmission.
Manual Transmission – If Equipped	We recommend you use Mopar ATF+4 Automatic Transmission Fluid.
Transfer Case	We recommend you use Mopar ATF+4 Automatic Transmission Fluid.
Axle Differential (Front Axles)	We recommend you use Mopar Gear & Axle Lubricant (SAE 75W85) (API GL-5)
Axle Differential (Rear M200 Sales Code DRZ)	We recommend you use Mopar Gear & Axle Lubricant (SAE 75W140) (API GL-5).
Axle Differential (Rear M220 Sales Codes DRE/DRF)	We recommend you use Mopar Gear & Axle Lubricant (SAE 75W85) (API GL-5). Models equipped with Trac-Lok Limited Slip Differential require a friction modifier additive.
Brake Master Cylinder	We recommend you use Mopar DOT 3 Brake Fluid, SAE J1703.
Power Steering Reservoir	We recommend you use Mopar Electric Steering Pump Fluid.

MULTIMEDIA

UCONNECT SYSTEMS

For detailed information about your Uconnect system, refer to your Uconnect Owner's Manual Supplement.

NOTE:
Uconnect screen images are for illustration purposes only and may not reflect exact software for your vehicle.

CYBERSECURITY

Your vehicle may be a connected vehicle and may be equipped with both wired and wireless networks. These networks allow your vehicle to send and receive information. This information allows systems and features in your vehicle to function properly.

Your vehicle may be equipped with certain security features to reduce the risk of unauthorized and unlawful access to vehicle systems and wireless communications. Vehicle software technology continues to evolve over time and FCA US LLC, working with its suppliers, evaluates and takes appropriate steps as needed. Similar to a computer or other devices, your vehicle may require software updates to improve the usability and performance of your systems or to reduce the potential risk of unauthorized and unlawful access to your vehicle systems.

The risk of unauthorized and unlawful access to your vehicle systems may still exist, even if the most recent version of vehicle software (such as Uconnect software) is installed.

WARNING!

- **It is not possible to know or to predict all of the possible outcomes if your vehicle's systems are breached. It may be possible that vehicle systems, including safety related systems, could be impaired or a loss of vehicle control could occur that may result in an accident involving serious injury or death.**
- **ONLY insert media (e.g., USB, SD card, or CD) into your vehicle if it came from a trusted source. Media of unknown origin could possibly contain malicious software, and if installed in your vehicle, it may increase the possibility for vehicle systems to be breached.**

(Continued)

WARNING! *(Continued)*

- **As always, if you experience unusual vehicle behavior, take your vehicle to your nearest authorized dealer immediately.**

NOTE:

- FCA US LLC or your dealer may contact you directly regarding software updates.
- To help further improve vehicle security and minimize the potential risk of a security breach, vehicle owners should:
  - Routinely check www.driveuconnect.com (U.S. Residents) or www.driveuconnect.ca (Canadian Residents) to learn about available Uconnect software updates.
  - Only connect and use trusted media devices (e.g. personal mobile phones, USBs, CDs).

Privacy of any wireless and wired communications cannot be assured. Third parties may unlawfully intercept information and private communications without your consent. For further information, refer to "Data Collection & Privacy" in your Uconnect Owner's Manual Supplement or "Onboard Diagnostic System (OBD II) Cybersecurity" in "Getting To Know Your Instrument Panel".

UCONNECT SETTINGS

The Uconnect system uses a combination of buttons on the touchscreen and buttons on the faceplate, located on the center of the instrument panel, that allow you to access and change the customer programmable features. Many features can vary by vehicle.

Buttons on the touchscreen are accessible on the Uconnect touchscreen.

Buttons on the faceplate can be located below and beside the Uconnect system. In addition, there is a Scroll/Enter control knob located on the right side. Turn the control knob to scroll through menus and change settings (i.e., 30, 60, 90), push the center of the control knob one or more times to select or change a setting (i.e., ON, OFF).

Your Uconnect system may also have a Screen Off or Mute button on the faceplate.

Push the Screen Off button on the faceplate to turn off the Uconnect screen. Push the Screen Off button on the faceplate a second time to turn the screen on.

Push the Back Arrow/X button (if equipped) on the touchscreen to exit out of a Menu or certain options on the Uconnect system.

Customer Programmable Features — Uconnect 3 Settings

Uconnect 3 Buttons On The Touchscreen And Buttons On The Faceplate

1 — Uconnect Buttons On The Touchscreen
2 — Uconnect Buttons On The Faceplate

Push the Settings button to display the settings menu screen. In this mode, the Uconnect system allows you to access all of the available programmable features.

NOTE:
Only one touchscreen area may be selected at a time.

When making a selection, press the button on the touchscreen to enter the desired mode. Once in the desired mode, press and release the preferred setting and make your selection. Once the setting is selected, press the Back Arrow/Done button on the touchscreen to return to the previous menu. Pressing the Up or Down Arrow Buttons on the right side of the screen will allow you to toggle up or down through the available settings.

NOTE:
All settings should be changed with the ignition in the ON/RUN position.

The following tables list the settings that may be found within the Uconnect 3 radio, along with the selectable options pertaining to each setting.

Language

After pressing the Language button on the touchscreen, the following settings will be available:

Setting Name	Selectable Options		
Language	English	Español	Français

Display

After pressing the Display button on the touchscreen, the following settings will be available:

Setting Name	Selectable Options	
Display Mode	Auto	Manual
Brightness	+	-
NOTE: The "Brightness" setting can also be adjusted by selecting any point on the scale between the "+" and "-" buttons on the touchscreen.		
Touchscreen Beep	On	Off

Units

After pressing the Units button on the touchscreen, the following settings will be available:

Setting Name	Selectable Options		
Units	US	Metric	Custom
NOTE: • The "Metric" option changes the Instrument Cluster Display to metric units of measure. • The "Custom" option allows setting the "Fuel Consumption" (L/100km, or km/L) and "Pressure" (kPa, or bar) units of measure independently.			

Clock & Date

After pressing the Clock & Date button on the touchscreen, the following settings will be available:

Setting Name	Selectable Options	
Set Time and Format	12 hr	24 hr
	AM	PM
NOTE: Within the "Set Time and Format" setting, press the corresponding arrow buttons on the touchscreen to adjust to the correct time.		
Show Time Status — If Equipped	On	Off
Sync Time — If Equipped	On	Off
NOTE: By selecting On/Off, this setting will Sync the time to the system's GPS.		

Camera

After pressing the "Camera" button on the touchscreen, the following settings will be available:

Setting Name	Selectable Options	
ParkView Backup Camera Delay	On	Off
NOTE: The "ParkView Backup Camera Delay" setting determines whether or not the screen will display the rear view image with dynamic grid lines for up to ten seconds after the vehicle is shifted out of REVERSE. This delay will be canceled if the vehicle's speed exceeds 8 mph (13 km/h), the transmission is shifted into PARK, or the ignition is switched to the OFF position.		

Setting Name	Selectable Options	
ParkView Backup Camera Active Guide Lines	On	Off
NOTE: The "ParkView Backup Camera Active Guide Lines" feature overlays the Rear Backup Camera image with active, or dynamic, grid lines to help illustrate the width of the vehicle and its project back up path, based on the steering wheel position when the option is checked. A dashed center line overlay indicates the center of the vehicle to assist with parking or aligning to a hitch/receiver.		
ParkView Backup Camera Fixed Guide Lines	On	Off

Safety/Assistance

After pressing the Safety/Assistance button on the touchscreen, the following settings will be available:

Setting Name	Selectable Options		
Forward Collision Warning — If Equipped	Off	Warning Only	Warning & Braking
Forward Collision Warning Sensitivity — If Equipped	Near	Med	Far
ParkSense — If Equipped	Sound Only	Sound & Display	
NOTE: The Rear Park Assist system scans for objects behind the vehicle when the transmission gear selector is in REVERSE and the vehicle speed is less than 7 mph (11 km/h).			

Setting Name	Selectable Options		
Front ParkSense - If Equipped	Low	Medium	High
Rear ParkSense Volume — If Equipped	Low	Medium	High
Blind Spot Alert — If Equipped	Off	Lights	Lights & Chime
NOTE: If your vehicle has experienced any damage in the area where the sensor is located, even if the fascia is not damaged, the sensor may have become misaligned. Take your vehicle to an authorized dealer to verify sensor alignment. A sensor that is misaligned results in the Blind Spot Monitor (BSM) not operating to specification.			
Hill Start Assist	On	Off	
Tire Fill Assist		☐	☑

Lights

After pressing the Lights button on the touchscreen, the following settings will be available:

Setting Name	Selectable Options	
Headlight Off Delay	0 sec	30 sec
	60 sec	90 sec
NOTE: When the “Headlight Off Delay” feature is selected, it allows the adjustment of the amount of time the headlights remain on after the engine is shut off.		

Setting Name	Selectable Options	
Headlight Illumination On Approach	+	-
Automatic High Beam Headlamps — If Equipped	On	Off
Daytime Running Lights	On	Off
NOTE: When the "Daytime Running Lights" feature is selected, the daytime running lights can be turned On or Off. The feature is only available if allowed by law in the country of the vehicle purchase.		
Flash Lights With Lock — If Equipped	On	Off
Interior Ambient Lights	+	-
NOTE: The "Interior Ambient Lights" setting can also be adjusted by selecting any point on the scale between the "+" and "-" buttons on the touchscreen.		

Doors & Locks

After pressing the Doors & Locks button on the touchscreen, the following settings will be available:

Setting Name	Selectable Options	
Auto Door Locks — If Equipped	On	Off
NOTE: When this feature is selected, all doors will lock automatically when the vehicle reaches a speed of 12 mph (20 km/h).		

Setting Name	Selectable Options		
Auto Unlock On Exit	On	Off	
NOTE: When this feature is selected, all doors will unlock when the vehicle is stopped and the driver's door is opened when the transmission is in the PARK or NEUTRAL position.			
Flash Lights With Lock	On	Off	
Sound Horn With Lock — If Equipped	Off	1st Press	2nd Press
Sound Horn With Remote Start — If Equipped	On	Off	
Remote Door Unlock/Door Lock	Driver	All	
NOTE: When “Driver” is programmed, only the driver's door will unlock on the first push of the key fob unlock button. You must push the key fob unlock button twice to unlock the passenger's doors. When “All” is programmed, all of the doors will unlock on the first press of the key fob unlock button. If “All” is programmed, all doors will unlock no matter which Passive Entry equipped door handle is grasped. If “Driver” is programmed, only the driver’s door will unlock when the driver’s door is grasped. Touching the handle more than once will only result in the driver’s door opening once. If the driver’s door is opened, the interior door lock/unlock switch can be used to unlock all doors (or use the key fob).			
Passive Entry — If Equipped	On	Off	
NOTE: The “Passive Entry” feature allows you to lock and unlock the vehicle’s door(s) without having to push the key fob lock or unlock buttons. It automatically unlocks the doors when the outside door handle is grabbed.			

Auto-On Comfort Systems — If Equipped

After pressing the Auto-On Comfort Systems button on the touchscreen, the following settings will be available:

Setting Name	Selectable Options		
Auto-On Driver Heated Seat & Steering Wheel With Vehicle Start — If Equipped	Off	Remote Start	All Starts
NOTE: When this feature is selected, the driver's heated seat and heated steering wheel will automatically turn on when temperatures are below 40°F (4.4°C). When temperatures are above 80°F (26.7°C), the driver vented seat will turn on.			

Engine Off Options

After pressing the Engine Off Options button on the touchscreen, the following settings will be available:

Setting Name	Selectable Options	
Headlight Off Delay	0 sec	30 sec
	60 sec	90 sec
NOTE: When this feature is selected, it allows the adjustment of the amount of time the headlights remain on after the engine is shut off.		
Doors On Engine Off Power Delay	+	-
Doors Off Engine Off Power Delay	+	-

Aux Switches

After pressing the "Aux Switches" button on the touchscreen, the following settings will be available:

Setting Name	Selectable Options		
Aux 1-4	Type	Latching	Momentary
	Power Source	Battery	Ignition
	Recalled Last State	☐	☐

NOTE:
Holding last state conditions are met when switch type is set to latching and power source is set to ignition.

Compass Settings — If Equipped

After pressing the "Compass Settings" button on the touchscreen, the following settings will be available:

Setting Name	Selectable Options														
Variance	1	2	3	4	5	6	7	8	9	10	11	12	13	14	15

NOTE:

- Compass Variance is the difference between Magnetic North and Geographic North. To compensate for the differences the variance should be set for the zone where the vehicle is driven, per the zone map. Once properly set, the compass will automatically compensate for the differences, and provide the most accurate compass heading.
- Keep magnetic materials away from the top of the instrument panel, such as iPod's, Mobile Phones, Laptops and Radar Detectors. This is where the compass module is located, and it can cause interference with the compass sensor, and it may give false readings.

Setting Name	Selectable Options	
Perform Compass Calibration	On	Off
NOTE: Press the "Calibration" button on the touchscreen to change this setting. This compass is self-calibrating, which eliminates the need to manually reset the compass. When the vehicle is new, the compass may appear erratic until it is calibrated. You may also calibrate the compass by pressing the "ON" button on the touchscreen and completing one or more 360-degree turns (in an area free from large metal or metallic objects). The compass will now function normally.		

Audio

After pressing the Audio button on the touchscreen, the following settings will be available:

Setting Name	Selectable Options				
Equalizer	Bass		Mid		Treble
NOTE: When in this display, you may adjust the "Bass", "Mid", and "Treble" settings. Adjust the settings with the + and – setting buttons on the touchscreen or by selecting any point on the scale between the + and – buttons on the touchscreen. Bass/Mid/Treble also allow you to simply slide your finger up or down to change the setting as well as press directly on the desired setting.					
Balance/Fade	Up Arrow Button	Down Arrow Button	Left Arrow Button	Right Arrow Button	Center C Button
NOTE: When in this display, you may adjust the Balance/Fade of the audio by using the Arrow button on the touchscreen to adjust the sound level from the front/rear or right/left side speakers. Press the C button on the touchscreen to reset the balance and fade to the factory setting.					

Setting Name	Selectable Options			
Speed Adjusted Volume	Off	1	2	3
Surround Sound — If Equipped	On	Off		
Loudness	On	Off		
NOTE: The "Loudness" feature improves sound quality at lower volumes when enabled.				
AUX Volume Offset — If Equipped	+	-		
NOTE: The "AUX Volume Offset" feature provides the ability to tune the audio level for portable devices connected through the AUX input.				

Phone/Bluetooth®

After pressing the Phone/Bluetooth® button on the touchscreen, the following settings will be available:

Setting Name	Selectable Options
Paired Phones	List of Paired Phones
NOTE: This feature shows which phones are paired to the Phone/Bluetooth® system. For further information, refer to "Phone Operation" in "Uconnect 3 with 5-inch display" section.	

SiriusXM® Setup — If Equipped

After pressing the SiriusXM® Setup button on the touchscreen, the following settings will be available:

Setting Name	Selectable Options
Channel Skip	List of Channels
NOTE: SiriusXM® can be programmed to designate a group of channels that are the most desirable to listen to or to exclude undesirable channels while scanning. This feature allows you to select the channels you would like to skip.	
Subscription Info	Sirius ID
NOTE: New vehicle purchasers or lessees will receive a free limited time subscription to SiriusXM® Satellite Radio. Following the expiration of the free services, it will be necessary to access the information on the Subscription Information screen to re-subscribe. 1. Press the Subscription Info button on the touchscreen to access the Subscription Information screen. 2. Write down the Sirius ID numbers for your receiver. To reactivate your service, either call the number listed on the screen or visit the provider online.	

Restore Settings To Default

After pressing the Restore Settings To Default button on the touchscreen, the following settings will be available:

Setting Name	Selectable Options	
Restore Settings To Default	OK	Cancel
NOTE: When the “Restore Settings” feature is selected, it will reset all settings to their default settings.		

Clear Personal Data

After pressing the Clear Personal Data button on the touchscreen, the following settings will be available:

Setting Name	Selectable Options	
Clear Personal Data	OK	Cancel
NOTE: When the “Clear Personal Data” feature is selected, it will remove all personal data including Bluetooth® devices and presets.		

Customer Programmable Features — Uconnect 4 Settings

Uconnect 4 With 7-inch Display Touchscreen And Faceplate Buttons

1 — Uconnect Buttons On The Touchscreen
2 — Uconnect Buttons On The Faceplate

Press the Settings button on the bottom bar, or press the Apps button, then press the Settings button on the touchscreen to display the menu setting screen. In this mode, the Uconnect system allows you to access all of the available programmable features.

NOTE:

- Only one touchscreen area may be selected at a time.
- Depending on the vehicles options, feature settings may vary.

When making a selection, press the button on the touchscreen to enter the desired mode. Once in the desired mode, press and release the preferred setting "option" until a check mark appears next to the setting, showing that setting has been selected. Once the setting is selected, either press the Back Arrow button on the touchscreen to return to the previous menu, or press the X button on the touchscreen to close out of the settings screen. Pressing the Up or Down Arrow button on the right side of the screen will allow you to toggle up or down through the available settings.

The following tables list the settings that may be found within the Uconnect 4 with 7-inch display radio, along with the selectable options pertaining to each setting.

Language

After pressing the Language button on the touchscreen, the following settings will be available:

Setting Name	Selectable Options		
Language	English	Espanol	Francais

Display

After pressing the Display button on the touchscreen, the following settings will be available:

Setting Name	Selectable Options	
Display Mode	Auto	Manual
Display Brightness Headlights On	+	-
Display Brightness Headlights Off	+	-
Touchscreen Beep	On	Off
Auto-Show Smartphone Display Upon Connection	On	Off
Control Screen Timeout - If Equipped	On	Off
Phone Pop-ups Displayed in Cluster	On	Off

Units

After pressing the Units button on the touchscreen, the following settings will be available:

Setting Name	Selectable Options		
Units	US	Metric	Custom

NOTE:

- The "Metric" option changes the Instrument Cluster Display to metric units of measure.
- The "Custom" option allows setting the "Fuel Consumption" (L/100km, or km/L) and "Pressure" (kPa, or bar) units of measure independently.

Voice

After pressing the Voice button on the touchscreen, the following settings will be available:

Setting Name	Selectable Options		
Voice Response Length	Brief	Detailed	
Show Command List	Always	With Help	Never

Clock

After pressing the Clock button on the touchscreen, the following settings will be available:

Setting Name	Selectable Options	
Sync Time With GPS — If Equipped	On	Off
Set Time Hours	+	-

Setting Name	Selectable Options	
NOTE: The "Set Time Hours" feature will allow you to adjust the hours. The Sync time with GPS button on the touchscreen must be unchecked.		
Set Time Minutes	+	-
NOTE: The "Set Time Minutes" feature will allow you to adjust the minutes. The Sync time with GPS button on the touchscreen must be unchecked.		
Time Format	12 hrs	24 hrs
Show Time in Status Bar — If Equipped	On	Off

Camera — If Equipped

After pressing the Camera button on the touchscreen, the following settings will be available:

Setting Name	Selectable Options	
ParkView Backup Camera Delay	On	Off
NOTE: The "ParkView Backup Camera Delay" setting determines whether or not the screen will display the rear view image with dynamic grid lines for up to 10 seconds after the vehicle is shifted out of REVERSE. This delay will be canceled if the vehicle's speed exceeds 8 mph (13 km/h), the transmission is shifted into PARK, or the ignition is switched to the OFF position.		

Setting Name	Selectable Options	
Active ParkView Backup Camera	On	Off
NOTE: The "Active ParkView Backup Camera" feature overlays the Rear Backup Camera image with active, or dynamic, grid lines to help illustrate the width of the vehicle and its projected backup path, based on the steering wheel position, when the option is checked. A dashed center line overlay indicates the center of the vehicle to assist with parking or aligning to a hitch/receiver.		
Fixed ParkView Backup Camera	On	Off
Front Camera Gridlines	On	Off
Auto Launch Off Road+	Off	Forward Facing Camera

Safety/Driving Assistance — If Equipped

After pressing the Safety/Driving Assistance button on the touchscreen, the following settings will be available:

Setting Name	Selectable Options		
Forward Collision Warning — If Equipped	Off	Warning Only	Warning & Braking
Forward Collision Warning Sensitivity — If Equipped	Near	Med	Far
NOTE: Sets the distance in which a Forward Collision Warning occurs.			
ParkSense — If Equipped	Sound	Sound & Display	
NOTE: The Rear Park Assist system scans for objects behind the vehicle when the transmission gear selector is in REVERSE and the vehicle speed is less than 7 mph (11 km/h).			

Setting Name	Selectable Options		
Front ParkSense Volume	Low	Medium	High
Rear ParkSense Volume	Low	Medium	High
Blind Spot Alert — If Equipped	Off	Lights	Lights & Chime
NOTE: If your vehicle has experienced any damage in the area where the sensor is located, even if the fascia is not damaged, the sensor may have become misaligned. Take your vehicle to an authorized dealer to verify sensor alignment. A sensor that is misaligned will result in the BSM not operating to specification.			
ParkView Backup Camera Delay	On		Off
NOTE: The "ParkView Backup Camera Delay" setting determines whether or not the screen will display the rear view image with dynamic grid lines for up to 10 seconds after the vehicle is shifted out of REVERSE. This delay will be canceled if the vehicle's speed exceeds 8 mph (13 km/h), the transmission is shifted into PARK, or the ignition is switched to the OFF position.			
Active ParkView Backup Camera	On		Off
NOTE: The "Active ParkView Backup Camera" feature overlays the Rear Backup Camera image with active, or dynamic, grid lines to help illustrate the width of the vehicle and its projected backup path, based on the steering wheel position, when the option is checked. A dashed center line overlay indicates the center of the vehicle to assist with parking or aligning to a hitch/receiver.			
Fixed ParkView Backup Camera	On		Off
Front Camera Gridlines	On		Off
Auto Launch Off Road+	Off	Forward Facing Camera	

Setting Name	Selectable Options	
Hill Start Assist	On	Off
Tire Fill Assist	☐	☑

Lights

After pressing the Lights button on the touchscreen, the following settings will be available:

Setting Name	Selectable Options	
Headlight Off Delay	0 sec	30 sec
	60 sec	90 sec
NOTE: When the “Headlight Off Delay” feature is selected, it allows the adjustment of the amount of time the headlights remain on after the engine is shut off.		
Headlight Illumination On Approach	+	-
Interior Ambient Lights	+	-
Daytime Running Lights	Yes	No
NOTE: When the “Daytime Running Lights” feature is selected, the daytime running lights can be turned On or Off. The feature is only available if allowed by law in the country of the vehicle purchase.		

Setting Name	Selectable Options	
Auto Dim High Beams — If Equipped	On	Off
NOTE: When the "Auto Dim High Beams" feature is selected, the high beam headlights activate/deactivate automatically under certain conditions.		
Flash Lights With Lock — If Equipped	On	Off

Doors & Locks

After pressing the Doors & Locks button on the touchscreen, the following settings will be available:

Setting Name	Selectable Options		
Auto Door Locks — If Equipped	On	Off	
NOTE: When this feature is selected, all doors will lock automatically when the vehicle reaches a speed of 12 mph (20 km/h).			
Auto Unlock On Exit	On	Off	
NOTE: When this feature is selected, all doors will unlock when the vehicle is stopped and the transmission is in the PARK or NEUTRAL position and the driver's door is opened.			
Flash Lights With Lock	On	Off	
Sound Horn With Lock — If Equipped	Off	1st Press	2nd Press
Sound Horn With Remote Start — If Equipped	On	Off	
Remote Door Unlock/Door Lock	Driver	All	

Setting Name	Selectable Options	
NOTE: When “Driver” is programmed, only the driver's door will unlock on the first push of the key fob unlock button. You must push the key fob unlock button twice to unlock the passenger's doors. When “All” is programmed, all of the doors will unlock on the first press of the key fob unlock button. If “All” is programmed, all doors will unlock no matter which Passive Entry equipped door handle is grasped. If “Driver” is programmed, only the driver’s door will unlock when the driver’s door is grasped. Touching the handle more than once will only result in the driver’s door opening once. If the driver’s door is opened, the interior door lock/unlock switch can be used to unlock all doors (or use key fob).		
Passive Entry - If Equipped	On	Off
NOTE: The “Passive Entry” feature allows you to lock and unlock the vehicle’s door(s) without having to push the key fob lock or unlock buttons. It automatically unlocks the doors when the outside door handle is grabbed.		

Engine Off Options — If Equipped

After pressing the Engine Off Options button on the touchscreen, the following settings will be available:

Setting Name	Selectable Options	
Doors On Engine Off Power Delay	+	-
Headlight Off Delay	+	-
NOTE: When this feature is selected, it allows the adjustment of the amount of time the headlights remain on after the engine is shut off.		
Doors Off Engine Off Power Delay	+	-

Aux Switches — If Equipped

After pressing the Aux Switches button on the touchscreen, the following settings will be available:

Setting Name	Selectable Options		
Aux 1-4	Type	Latching	Momentary
	Power Source	Battery	Ignition
	Recalled Last State	☐	☑
NOTE: Holding last state conditions are met when switch type is set to latching and power source is set to ignition.			

Audio

After pressing the Audio button on the touchscreen, the following settings will be available:

Setting Name	Selectable Options		
Balance & Fade	Speaker Icon		
NOTE: When in this display, you may adjust the Balance & Fade of the audio by pressing and dragging the Speaker Icon toward any location in the box.			
Equalizer	Bass	Mid	Treble
NOTE: When in this display, you may adjust the “Bass”, “Mid”, and “Treble” settings. Adjust the settings with the + and – setting buttons on the touchscreen or by selecting any point on the scale between the + and – buttons on the touchscreen. Bass/Mid/Treble also allow you to simply slide your finger up or down to change the setting as well as press directly on the desired setting.			

Setting Name	Selectable Options			
Speed Adjusted Volume	Off	1	2	3
AUX Volume Offset — If Equipped	+		-	
NOTE: This feature provides the ability to tune the audio level for portable devices connected through the AUX input.				
Loudness	Yes		No	
NOTE: The "Loudness" feature improves sound quality at lower volumes when enabled.				
Auto Play	On		Off	
NOTE: The "Auto Play" feature automatically starts playing audio when a USB device is connected and turned on.				
Auto On Radio — If Equipped	On		Off	
Radio Off With Door — If Equipped	On		Off	

Phone/Bluetooth®

After pressing the Phone/Bluetooth® button on the touchscreen, the following settings will be available:

Setting Name	Selectable Options
Do Not Disturb	Do Not Disturb Options

Setting Name	Selectable Options	
Paired Phones And Audio Devices	List Of Paired Phones And Audio Devices	
NOTE: This feature shows which phones and audio devices are paired to the Phone/Bluetooth® system. For further information, refer to "Phone Operation" in Uconnect 4 with 7-inch display" section.		
Phone Pop-ups Displayed In Cluster	On	Off

SiriusXM® Setup — If Equipped

After pressing the SiriusXM® Setup button on the touchscreen, the following settings will be available:

Setting Name	Selectable Options
Channel Skip	List Of Channels
NOTE: SiriusXM® can be programmed to include desired channels and exclude undesired channels. This feature allows you to select the channels you would like to skip.	
Subscription Info	Sirius ID
NOTE: New vehicle purchasers or lessees will receive a free limited time subscription to SiriusXM® Satellite Radio. Following the expiration of the free services, it will be necessary to access the information on the Subscription Information screen to re-subscribe. 1. Press the Subscription Info button on the touchscreen to access the Subscription Information screen. 2. Write down the Sirius ID numbers for your receiver. To reactivate your service, either call the number listed on the screen or visit the provider online.	

Restore Settings To Default

After pressing the Restore Settings To Default button on the touchscreen, the following settings will be available:

Setting Name	Selectable Options	
Restore Settings To Default	OK	Cancel
NOTE: When this feature is selected it will reset all settings to their default settings.		

Clear Personal Data

After pressing the Clear Personal Data button on the touchscreen, the following settings will be available:

Setting Name	Selectable Options	
Clear Personal Data	OK	Cancel
NOTE: When this feature is selected, it will remove all personal data including Bluetooth® devices and presets.		

Customer Programmable Features — Uconnect 4C/ 4C NAV Settings

Uconnect 4C/4C NAV Touchscreen And Faceplate Buttons
1 — Uconnect Buttons On The Touchscreen
2 — Uconnect Buttons On The Faceplate

Press the Apps button, then press the Settings button on the touchscreen to display the menu setting screen. In this mode, the Uconnect system allows you to access all of the available programmable features.

NOTE:

- Only one touchscreen area may be selected at a time.
- Depending on the vehicle's options, feature settings may vary.

When making a selection, press the button on the touchscreen to enter the desired mode. Once in the desired mode, press and release the preferred setting "option" until a check mark appears next to the setting, showing that setting has been selected. Once the setting is selected, either press the Back Arrow button on the touchscreen to return to the previous menu, or press the X button on the touchscreen to close out of the settings screen. Pressing the Up or Down Arrow button on the right side of the screen will allow you to toggle up or down through the available settings.

The following tables list the settings that may be found within the Uconnect 4C/4C NAV radio, along with the selectable options pertaining to each setting.

Language

After pressing the Language button on the touchscreen, the following settings will be available:

Setting Name	Selectable Options		
Set Language	English	Español	Français
NOTE: When the “Set Language” feature is selected, you may select one of multiple languages (English / Français / Español) for all display nomenclature, including the trip functions and the navigation system (if equipped). Press the Set Language button on the touchscreen, then press the desired language button on the touchscreen until a check mark appears next to the language, showing that setting has been selected.			

Display

After pressing the Display button on the touchscreen, the following settings will be available:

Setting Name	Selectable Options	
Display Mode	Manual	Auto
Display Brightness With Headlights ON	+	-
NOTE: To make changes to the "Display Brightness with Headlights ON" setting, the headlights must be on and the interior dimmer switch must not be in the "party" or "parade" positions.		
Display Brightness With Headlights OFF	On	Off
NOTE: To make changes to the "Display Brightness with Headlights OFF" setting, the headlights must be off and the interior dimmer switch must not be in the "party" or "parade" positions.		

Setting Name	Selectable Options		
Theme	Set Theme		
NOTE: When in this display, you may select the theme for the display screen. To make your selection, press the Set Theme button on the touchscreen, then select the desired theme option button until a check mark appears showing that the setting has been selected.			
Touchscreen Beep	On		Off
Control Screen Time-Out	On		Off
NOTE: When the "Control Screen Time-Out" feature is selected, the controls screen will stay open for five seconds before the screen times out. With the feature deselected, the screen will stay open until it is manually closed.			
Auto Launch with Off Road +	Off	Forward Camera	Off Road Pages
Navigation Next Turn Pop-ups Displayed in Cluster	On		Off
NOTE: When the "Navigation Next Turn Pop-ups Displayed in Cluster" feature is selected, the turn-by-turn directions will appear in the instrument cluster display as the vehicle approaches a designated turn within a programmed route.			
Phone Pop-ups Displayed in Cluster	On		Off

Units

After pressing the Units button on the touchscreen, the following settings will be available:

Setting Name	Selectable Options		
Units	US	Metric	Custom

NOTE:

- The "Metric" option changes the instrument cluster display to metric units of measure.
- The "Custom" option allows setting the "Fuel Consumption" (L/100km, or km/L), "Pressure" (kPa, or bar), and "Temperature" (°C or °F) units of measure independently.

Voice

After pressing the Voice button on the touchscreen, the following settings will be available:

Setting Name	Selectable Options		
Voice Response Length	Brief	Detailed	
Show Command List	Always	With Help	Never

Clock

After pressing the Clock button on the touchscreen, the following settings will be available:

Setting Name	Selectable Options	
Sync Time With GPS — If Equipped	On	Off

Setting Name	Selectable Options	
Set Time Hours	+	-
NOTE: The “Set Time Hours” feature will allow you to adjust the hours. The Sync time with GPS button on the touchscreen must be unchecked.		
Set Time Minutes	+	-
NOTE: The “Set Time Minutes” feature will allow you to adjust the minutes. The Sync time with GPS button on the touchscreen must be unchecked.		
Time Format	12hrs	24hrs
Show Time in Status Bar — If Equipped	On	Off

Camera

After pressing the Camera button on the touchscreen, the following settings will be available:

Setting Name	Selectable Options	
ParkView Backup Camera Delay	On	Off
NOTE: The “ParkView Backup Camera Delay” setting determines whether or not the screen will display the rear view image with dynamic grid lines for up to 10 seconds after the vehicle is shifted out of REVERSE. This delay will be canceled if the vehicle’s speed exceeds 8 mph (13 km/h), the transmission is shifted into PARK, or the ignition is switched to the OFF position.		

Setting Name	Selectable Options		
ParkView Backup Camera Active Guide Lines	On		Off
NOTE: The "ParkView Backup Camera Active Guide Lines" feature overlays the Rear Backup Camera image with active, or dynamic, grid lines to help illustrate the width of the vehicle and its projected back up path, based on the steering wheel position, when the option is checked. A dashed center line overlay indicates the center of the vehicle to assist with parking or aligning to a hitch/receiver.			
ParkView Backup Camera Fixed Guide Lines	On		Off
Front Camera Gridelines	On		Off
Auto Launch Off Road+	Off	Forward Facing Camera	Off Road Pages

Safety & Driving Assistance

After pressing the Safety & Driving Assistance button on the touchscreen, the following settings will be available:

Setting Name	Selectable Options		
Forward Collision Warning — If Equipped	Off	Warning Only	Warning & Braking
Forward Collision Warning Sensitivity — If Equipped	Near	Med	Far
NOTE: Sets the distance in which a Forward Collision Warning occurs.			

Setting Name	Selectable Options		
ParkSense — If Equipped	Sound Only	Sound & Display	
NOTE: The Rear Park Assist system scans for objects behind the vehicle when the transmission gear selector is in REVERSE and the vehicle speed is less than 7 mph (11 km/h).			
Front ParkSense Volume	Low	Medium	High
Rear ParkSense Volume	Low	Medium	High
Blind Spot Alert — If Equipped	Off	Lights	Lights & Chime
NOTE: If your vehicle has experienced any damage in the area where the sensor is located, even if the fascia is not damaged, the sensor may have become misaligned. Take your vehicle to an authorized dealer to verify sensor alignment. A sensor that is misaligned will result in the BSM not operating to specification.			
Hill Start Assist	On	Off	
Tire Fill Assist	☐	☑	

Auto-On Comfort — If Equipped

After pressing the Auto-On Comfort button on the touchscreen, the following settings will be available:

Setting Name	Selectable Options		
Auto-On Driver Heated Seat & Steering Wheel With Vehicle Start — If Equipped	Off	Remote Start	All Starts
NOTE: When this feature is selected, the driver's heated seat and heated steering wheel will automatically turn on when temperatures are below 40° F (4.4° C). When temperatures are above 80° F (26.7° C), the driver's vented seat will turn on.			

Doors & Locks

After pressing the Doors & Locks button on the touchscreen, the following settings will be available:

Setting Name	Selectable Options		
Auto Door Locks — If Equipped	On	Off	
NOTE: When this feature is selected, all doors will lock automatically when the vehicle reaches a speed of 12 mph (20 km/h).			
Auto Unlock On Exit	On	Off	
NOTE: When the "Auto Unlock On Exit" feature is selected, all doors will unlock when the vehicle is stopped, and the driver's door is opened when the transmission is in the PARK or NEUTRAL position.			
Flash Lights With Lock	On	Off	
Sound Horn With Lock — If Equipped	Off	1st Press	2nd Press
Sound Horn With Remote Start — If Equipped	On	Off	

Setting Name	Selectable Options	
1st Press Of Key Fob Unlocks	Driver Door	All Doors
NOTE: When "Driver Door" is programmed with 1st Press Of Key Fob Unlocks, only the driver's door will unlock with the first press of the key fob unlock button. You must press the key fob unlock button twice to unlock the passenger's doors. When "All Doors" is programmed for 1st Press Of Key Fob Unlocks, all doors will unlock on the first press of the key fob unlock button. If the vehicle is programmed 1st Press Of Key Fob Unlocks “All Doors,” all doors will unlock, no matter which Passive Entry equipped door handle is grasped. If 1st Press Of Key Fob Unlocks “Driver Door” is programmed, only the driver’s door will unlock when the driver’s door is grasped. With Passive Entry, if 1st Press Of Key Fob Unlocks “Driver Door” is programmed, touching the handle more than once will result in only the driver’s door opening. If “Driver Door” is selected, once the driver door is opened, the interior door lock/unlock switch can be used to unlock all doors (or use the key fob).		
Passive Entry — If Equipped	On	Off
NOTE: The “Passive Entry” feature allows you to lock and unlock the vehicles door(s) without having to push the key fob lock or unlock buttons. To make your selection, press the Passive Entry button on the touchscreen, until a check mark appears next to the setting, showing that the setting has been selected.		

Aux Switches — If Equipped

After pressing the Aux Switches button on the touchscreen, the following settings will be available:

Setting Name	Selectable Options		
Aux 1-4	Type	Latching	Momentary
	Power Source	Battery	Ignition
	Recalled Last State	☐	☑
NOTE: Holding last state conditions are met when type is set to latching and power source is set to ignition.			

Audio

After pressing the Audio button on the touchscreen, the following settings will be available:

Setting Name	Selectable Options		
Balance/Fade	Speaker Icon		
NOTE: When in this display, you may adjust the “Balance/Fade” of the audio by pressing and dragging the Speaker Icon toward any location in the box.			
Equalizer	Bass	Mid	Treble
NOTE: When in this display, you may adjust the “Bass”, “Mid”, and “Treble” settings. Adjust the settings with the + and – setting buttons or by selecting any point on the scale between the + and – buttons on the touchscreen. Bass/Mid/Treble also allow you to simply slide your finger up or down to change the setting as well as press directly on the desired setting.			

Setting Name	Selectable Options			
Speed Adjusted Volume	Off	1	2	3
AUX Volume Offset — If Equipped	+		-	
NOTE: This feature provides the ability to tune the audio level for portable devices connected through the AUX input.				

Phone/Bluetooth®

After pressing the Phone/Bluetooth® button on the touchscreen, the following settings will be available:

Setting Name	Selectable Options	
Phone Pop-ups Displayed In Cluster	On	Off
Do Not Disturb	Do Not Disturb Options	
Paired Phones And Audio Devices	List Of Paired Phones And Audio Devices	
NOTE: This feature shows which phones and audio devices are paired to the Phone/Bluetooth® system. For further information, refer to "Phone Operation" in "Uconnect 3 with 5-inch display" section.		

Engine Off Options

After pressing the Engine Off Options button on the touchscreen, the following settings will be available:

Setting Name	Selectable Options	
Doors On Engine Off Power Delay	+	-
Doors Off Engine Off Power Delay	+	-

Setting Name	Selectable Options	
Headlight Off Delay	0 sec	30 sec
	60 sec	90 sec
NOTE: When this feature is selected, it allows the adjustment of the amount of time the headlights remain on after the engine is shut off.		

Lights

After pressing the Lights button on the touchscreen, the following settings will be available:

Setting Name	Selectable Options	
Headlight Off Delay	0 sec	30 sec
	60 sec	90 sec
NOTE: When this feature is selected, it allows the adjustment of the amount of time the headlights remain on after the engine is shut off.		
Headlight Illumination On Approach	+	-
Daytime Running Lights	Yes	No
NOTE: When the “Daytime Running Lights” feature is selected, the daytime running lights can be turned On or Off. The feature is only available if allowed by law in the country of the vehicle purchase.		
Flash Lights With Lock — If Equipped	On	Off

Setting Name	Selectable Options	
Interior Ambient Lights	+	-
NOTE: The "Interior Ambient Lights" setting can also be adjusted by selecting any point on the scale between the + and - buttons on the touchscreen.		
Auto Dim High Beams — If Equipped	On	Off
NOTE: When the "Auto Dim High Beams" feature is selected, the high beam headlights activate/deactivate automatically under certain conditions.		

Mirrors and Wipers

After pressing the Mirrors and Wipers button on the touchscreen, the following settings will be available:

Setting Name	Selectable Options	
Headlights With Wipers — If Equipped	On	Off

SiriusXM® Setup — If Equipped

After pressing the SiriusXM® Setup button on the touchscreen, the following settings will be available:

Setting Name	Selectable Options
Channel Skip	List Of Channels
NOTE: SiriusXM® can be programmed to include desired channels and exclude undesired channels. This feature allows you to select the channels you would like to skip.	

Setting Name	Selectable Options
Subscription Info	Sirius ID

NOTE:
New vehicle purchasers or lessees will receive a free limited time subscription to SiriusXM® Satellite Radio. Following the expiration of the free services, it will be necessary to access the information on the Subscription Information screen to re-subscribe.

1. Press the Subscription Info button on the touchscreen to access the Subscription Information screen.
2. Write down the Sirius ID numbers for your receiver. To reactivate your service, either call the number listed on the screen or visit the provider online.

SiriusXM® Travel Link is a separate subscription.

Restore Settings To Default

After pressing the Restore Settings To Default button on the touchscreen, the following settings will be available:

Setting Name	Selectable Options	
Reset App Drawer	OK	Cancel
Restore Apps	Back	Next

NOTE:
Restoring Apps will delete all installed apps. This feature is used if there is an issue using or installing apps. To restore apps, press the Next button in the pop-up screen, and then press “Yes” on the confirmation screen. To keep installed apps, press “Cancel.”

Setting Name	Selectable Options	
Restore Settings	OK	Cancel
NOTE: When the “Restore Settings” feature is selected, it will reset all settings to their default settings.		
Clear Personal Data	Yes	Cancel
NOTE: When the “Clear Personal Data” feature is selected, it will remove all personal data including Bluetooth® devices and presets.		

System Information — If Equipped

After pressing the System Information button on the touchscreen, the following settings will be available:

Setting Name	Selectable Options	
Software Licenses	Software Information Screen	
NOTE: When this feature is selected, a “Licensing Information” screen will appear, displaying a licensing information website for the radio.		
Map Update	Download System Information To USB	Generate Request Code
NOTE: The “Download System Information To USB” will create a special USB required for Map updates of the radio. “Generate Request Code” will display a code for the user to input online when downloading the maps.		

SAFETY AND GENERAL INFORMATION

Safety Guidelines

WARNING!
ALWAYS drive safely with your hands on the steering wheel. You have full responsibility and assume all risks related to the use of the Uconnect features and applications in this vehicle. Only use Uconnect when it is safe to do so. Failure to do so may result in an accident involving serious injury or death.

Ensure that all persons read this manual carefully before using the system. It contains instructions on how to use the system in a safe and effective manner.

Do NOT attach any object to the touchscreen. Doing so can result in damage to the touchscreen.

Please read and follow these safety precautions. Failure to do so may result in injury or property damage.

- Glance at the screen only when safe to do so. If prolonged viewing of the screen is required, park in a safe location and set the parking brake.
- Stop use immediately if a problem occurs. Failure to do so may cause injury or damage to the product. Return it to an authorized dealer for repair.
- Ensure the volume level of the system is set to a level that still allows you to hear outside traffic and emergency vehicles.

Safe Usage Of The Uconnect System

- Read all instructions in this manual carefully before using your system to ensure proper usage.
- The Uconnect system is a sophisticated electronic device. Do not let young children use the system.
- Permanent hearing loss may occur if you play your music or the system at loud volumes. Exercise caution when setting the volume on the system.
- Keep drinks, rain and other sources of moisture away from the system. Besides damage to the system, moisture can cause electric shocks as with any electronic device.

NOTE:
Many features of this system are speed dependent. For your own safety, it is not possible to use some of the touchscreen features while the vehicle is in motion.

Exposure To Radio Frequency Radiation

The internal wireless radio operates within guidelines found in radio frequency safety standards and recommendations, which reflect the consensus of the scientific community. The radio manufacturer believes the internal wireless radio is safe for use by consumers. The level of energy emitted is far less than the electromagnetic energy emitted by wireless devices such as mobile phones. However, the use of wireless radios may be restricted in some situations or environments, such as aboard airplanes. If you are unsure of restrictions, you are encouraged to ask for authorization before turning on the wireless radio.

Care And Maintenance

Touchscreen

- Do not press the touchscreen with any hard or sharp objects (pen, USB stick, jewelry, etc.), which could scratch the touchscreen surface!
- Do not spray any liquid or caustic chemicals directly on the screen! Use a clean and dry microfiber lens cleaning cloth in order to clean the touchscreen.
- If necessary, use a lint-free cloth dampened with a cleaning solution, such as isopropyl alcohol or an isopropyl alcohol and water solution ratio of 50:50. Be sure to follow the solvent manufacturer's precautions and directions.

UCONNECT 3 WITH 5-INCH DISPLAY

Introduction

Uconnect 3 With 5-Inch Display

1 — RADIO

Push the RADIO button on the faceplate to enter Radio Mode. The different tuner modes; FM/AM/SXM (if equipped), can be selected by pressing the corresponding buttons on the touchscreen in Radio Mode.

2 — COMPASS

Push the COMPASS button on the faceplate to display the current direction of the vehicle.

3 — SETTINGS

Push the SETTINGS button on the faceplate to display the customer programmable features.

4 — MORE

Push the MORE button on the faceplate to access additional options.

5 — ENTER/BROWSE & TUNE/SCROLL

Push the ENTER/BROWSE button to accept a highlighted selection on the screen. Rotate the TUNE/SCROLL rotary knob to scroll through a list or tune to a radio station.

6 — SCREEN OFF

Push the SCREEN OFF button to turn the touchscreen off. To turn the touchscreen back on, press the screen.

7 — MUTE

Push the MUTE button to turn off the audio of the radio system. Press it again to turn the audio back on.

8 — VOLUME/POWER

Rotate the rotary knob to adjust the Volume. Push the VOLUME/POWER button to turn the system ON or OFF.

9 — PHONE

Push the PHONE button on the faceplate to access the Uconnect Phone feature.

10 — MEDIA

Pushing the MEDIA button on the faceplate will allow you to switch to Media mode: CD (if equipped), USB, AUX, and Bluetooth®.

Radio Mode

Operating Radio Mode

Radio Mode

1 — Station Presets
2 — All Presets
3 — Seek Up
4 — Audio
5 — Info
6 — Tune
7 — AM/FM/SXM
8 — Seek Down

The radio is equipped with the following modes:

- FM
- AM
- SiriusXM® Radio – If Equipped

Push the RADIO button on the faceplate, to enter the Radio Mode. The different tuner modes – FM/AM/SXM (if equipped) – can then be selected by pressing the corresponding buttons on the touchscreen in the Radio mode.

VOLUME/POWER Knob

Rotate the VOLUME/POWER rotary knob to adjust the Volume. When the audio system is turned on, the sound will be set at the same volume level as last played.

Push the VOLUME/POWER button to turn the system on or off.

MUTE Button

Push the MUTE button to mute the system. Push the MUTE button again to unmute the system.

TUNE/SCROLL Control

Turn the rotary TUNE/SCROLL control knob clockwise to increase or counterclockwise to decrease the radio station frequency. Push the ENTER/BROWSE button to choose a selection.

Seek Functions

Seek Up

Press and release the Seek Up button on the touchscreen to tune the radio to the next listenable station or channel.

During a Seek Up function, if the radio reaches the starting station after passing through the entire band two times, the radio will stop at the station where it began.

Fast Seek Up

Press and hold the Seek Up button on the touchscreen to advance the radio through the available stations or channels at a faster rate. The radio stops at the next available station or channel when the button on the touchscreen is released.

Seek Down

Press and release the Seek Down button on the touchscreen to tune the radio to the next listenable station or channel.

During a Seek Down function, if the radio reaches the starting station after passing through the entire band two times, the radio will stop at the station where it began.

Fast Seek Down

Press and hold the Seek Down button on the touchscreen to advance the radio through the available stations or channels at a faster rate. The radio stops at the next available station or channel when the button on the touchscreen is released.

Direct Tune Functions

Press the Tune button on the touchscreen to directly tune to a specific radio station. A keypad will appear. On the keypad, enter in your desired radio station, and the system will automatically tune to it.

SiriusXM® Satellite Radio Mode — If Equipped

SiriusXM® Satellite Radio uses direct satellite-to-receiver broadcasting technology to provide clear, coast to coast radio content. SiriusXM® is a subscription based service.

Get over 160 channels on your satellite radio, and enjoy all you want, all in one place. Hear commercial-free music, sports, news, talk, and entertainment. Get all the premium programming, including Howard Stern, every NFL® game,

every MLB®, every NHL® game, every NASCAR® race, Martha Stewart, Oprah Radio, and more. Get 20+ extra channels, including SiriusXM® Latino, offering 20 channels of commercial-free music, news, talk, comedy, sports, and more dedicated to Spanish language programming.

SiriusXM® services require subscriptions, sold separately after the trial included with the new vehicle purchase. If you decide to continue your service at the end of your trial subscription, the plan you choose will automatically renew and bill at then-current rates until you call SiriusXM® at 1-866-635-2349 to cancel. See SiriusXM® Customer Agreement for complete terms at www.siriusxm.com (US Residents) or www.siriusxm.ca (Canadian Residents). All fees and programming subject to change. Our satellite service is available only to those at least 18 and older in the 48 contiguous USA and D.C. Our Sirius satellite service is also available in Puerto Rico (with coverage limitations). Our Internet radio service is available throughout our satellite service area and in Alaska and Hawai. © 2019 SiriusXM® Radio Inc. SiriusXM® and all related marks and logos are trademarks of SiriusXM® Radio Inc.

This functionality is only available for radios equipped with a Satellite receiver. To receive satellite radio, the vehicle needs to be outside with a clear view to the sky.

If the screen displays Acquiring Signal, you may need to change the vehicle's position to receive a signal. In most cases, the satellite radio does not receive a signal in underground parking garages or tunnels.

Setting Presets

The Presets are available for all Radio Modes and are activated by pressing any of the four Preset buttons on the touchscreen, located at the top of the screen.

When you are receiving a station that you wish to commit into memory, press and hold the desired numbered button on the touchscreen for more than two seconds or until you hear a confirmation beep.

The Radio stores up to 12 presets in each of the Radio modes. Four presets are visible at the top of the radio screen.

Audio Settings

1. Push the SETTINGS button on the right side of the radio faceplate. If the settings button is not present, push the MORE button on the faceplate, then the Settings button on the touchscreen.
2. Scroll down and press the Audio button on the touchscreen to open the Audio menu.

3. The Audio Menu shows the following options for you to customize your audio settings:

   - **Auto Play** — Press the Auto Play button on the touchscreen to select between ON or OFF. This feature determines if music automatically starts playing from a device when it is first connected to the Media hub's USB port.
   - **Equalizer** — Press the Equalizer button on the touchscreen to adjust the Bass, Mid and Treble. Use the + or – buttons on the touchscreen to adjust the equalizer to your desired settings. Press the Back Arrow button on the touchscreen when done.
   - **Balance/Fade** — Press the Balance/Fade button on the touchscreen to adjust the sound from the speakers. Use the arrow button on the touchscreen to adjust the sound level from the front and rear or right and left side speakers. Press the Center C button on the touchscreen to reset the balance and fade to the factory setting. Press the Back Arrow button on the touchscreen when done.
   - **Speed Adjust Volume** — Press the Speed Adjusted Volume button on the touchscreen to select between OFF, 1, 2 or 3. This will decrease the radio volume relative to a decrease in vehicle speed. Press the Back Arrow button on the touchscreen when done.
   - **Loudness** — Press the Loudness button on the touchscreen to select the Loudness feature. When this feature is activated, it improves sound quality at lower volumes.

Clock Settings

1. Push the SETTINGS button on the faceplate, or push the MORE button on the faceplate, and then the SETTINGS button on the touchscreen.
2. Select the Clock and Date button on the touchscreen.
3. Next, select Set Time to change the time.
4. Select Set Date to change the date.
5. To set the time, select the Seek Up or Seek Down arrows as appropriate. Select "12 hrs vs 24 hrs", "AM" or "PM" or select the "Time Zones" (if equipped).
6. Select the Done button when complete.

Media Mode

Operating Media Mode

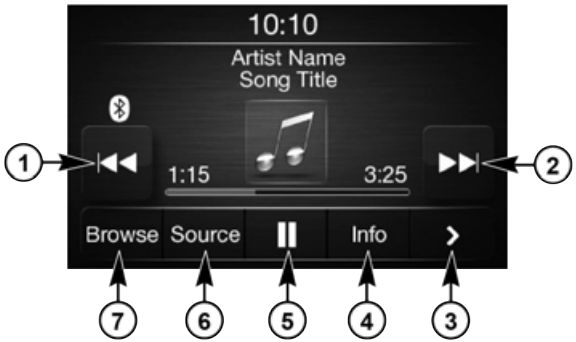

Media Mode

1 — Seek Down
2 — Seek Up
3 — Additional Functions
4 — Info
5 — Pause/Play
6 — Source
7 — Browse

Media Mode is entered by pushing the MEDIA button located on the faceplate.

Audio Source Selection

Once in Media Mode, press the Source button on the touchscreen and the desired mode button on the touchscreen. Disc (if equipped), USB, SD Card (if equipped), AUX and Bluetooth® (if equipped), are the Media sources available. When available, you can select the Browse button on the touchscreen to be given these options:

- Now Playing
- Artists
- Albums
- Genres
- Songs
- Playlists
- Folders

You can press the Source, Pause/Play, or the Info button on the touchscreen for artist information on the current song playing.

Seek Up/Seek Down Functions

Seek Up /Seek Down

Press and release the Seek Up button on the touchscreen for the next selection. Press and release the Seek Down button on the touchscreen to return to the beginning of the current selection, or return to the beginning of the previous selection if the track is within the first few seconds of the current selection.

Fast Seek Up

Press and hold the Seek Up button on the touchscreen and the desired mode will begin to fast forward through the current track until the button on the touchscreen is released.

Fast Seek Down

Press and hold the Seek Down button on the touchscreen and the desired mode will begin to rewind through the current track until the button on the touchscreen is released.

Track Selection (Browse)

Rotate the Browse button on the touchscreen to scroll through and select a desired track on the iPod®, MP3 player, phone, or USB. Press the Exit button on the touchscreen if you wish to cancel the Browse function.

Repeat

Press the Repeat button on the touchscreen to repeat the song selection. To cancel Repeat, press the Repeat button on the touchscreen a second time.

Shuffle

Press the Shuffle button on the touchscreen to play the selections on the USB/iPod® or Bluetooth® device in random order to provide an interesting change of pace. Press the Shuffle button on the touchscreen a second time to turn this feature off.

Track Info

Press the Info button on the touchscreen to display the current track information. Press the X button on the touchscreen to cancel this feature.

Audio

Refer to “Audio Settings” for the adjustable audio settings.

USB/iPod® Mode

USB/iPod® Mode is entered by either inserting a USB Jump Drive or iPod® cable into the USB port, or by pushing the MEDIA button located on the faceplate. Once in Media Mode, press the Source button on the touchscreen, and select the USB/iPod® button.

Inserting USB/iPod® Device

Gently insert the USB/iPod® device into the USB Port. If you insert a USB/iPod® device with the ignition ON, the unit will switch to USB/iPod® mode and begin to play when you insert the device. The display will show the track number and index time in minutes and seconds. Play will begin at the start of track 1.

Browse

Press the Browse button on the touchscreen to select Artist, Albums, Genres, Songs, Playlists or Folders from the USB/iPod® device. Once the desired selection is made you can chose from the available media by pressing the button on the touchscreen. Press the Exit button on the touchscreen if you wish to cancel the Browse function.

Bluetooth® Mode

Bluetooth® Streaming Audio (BTSA) or Bluetooth® Mode is entered by pairing a Bluetooth® device containing music to the Uconnect system.

Before proceeding, the Bluetooth® device must be paired with the Uconnect Phone to communicate with the Uconnect system.

Refer to “Phone Mode” section for pairing procedure.

Once the Bluetooth® device is paired to the Uconnect system, push the MEDIA button located on the faceplate. Once in Media Mode, press the Source button on the touchscreen and select the Bluetooth® button.

NOTE:
For mobile phone compatibility and pairing instructions, please visit UconnectPhone.com.

AUX Mode

AUX Mode is entered by inserting a AUX device using a stereo cable with a 3.5 mm audio jack into the AUX port or by pushing the MEDIA button located on the faceplate. Once in Media Mode, press the Source button on the touchscreen, and select the AUX button.

Inserting Auxiliary Device

Gently insert the Auxiliary device cable into the AUX Port. If you insert an Auxiliary device with the ignition on, the unit will switch to AUX mode and begin to play when you insert the device cable.

Controlling The Auxiliary Device

The control of the Auxiliary device (e.g., selecting playlists, play, fast forward, etc.) cannot be provided by the radio; use the device controls instead. Adjust the volume with the VOLUME rotary knob or with the volume of the attached device.

The radio unit is acting as the amplifier for audio output from the Auxiliary device. Therefore, if the volume control on the Auxiliary device is set too low, there will be insufficient audio signal for the radio unit to play the music on the device.

Phone Mode

Operating Phone Mode

Phone Mode

1 — Call/Redial/Hold
2 — Phone Signal Strength
3 — Paired Phone
4 — Phone Battery Life
5 — Mute Microphone
6 — Transfer To/From Uconnect System
7 — Uconnect Phone Settings
8 — Text Messaging
9 — Direct Dial Pad
10 — Recent Call Log
11 — Browse Phone Book
12 — End Call

The Uconnect Phone is a voice-activated, hands-free, in-vehicle communications system with voice command capability. Refer to Voice Recognition (VR) within this publication for further information.

The Uconnect Phone allows you to dial a phone number with your mobile phone using simple voice commands.

NOTE:
The Uconnect Phone requires a mobile phone equipped with the Bluetooth® Hands-Free Profile. To check mobile phone compatibility, please visit UconnectPhone.com.

For Uconnect customer support:

- US residents - visit UconnectPhone.com or call 1-877-855-8400
- Canadian residents - visit UconnectPhone.com or call 1-800-465-2001 (English) or 1-800-387-9983 (French)

Phone Mode Activation

Press the PHONE button on the front panel to activate the Phone mode.

Main Functions

The buttons on the display can be used to:

- Compose phone numbers using the graphic keypad on the display.
- Display and call the contacts in the mobile phone phonebook.
- Display and call contacts from the Recent Calls menu.
- Pair up to 10 phones/audio devices to make access and connection easier and quicker.
- Transfer calls from the system to the mobile phone and vice versa.
- Deactivate the microphone audio for privacy.

The mobile phone audio is transmitted through the vehicle's audio system. The system automatically mutes the radio when the Phone function is used.

Connecting/Disconnecting A Mobile Phone Or Bluetooth® Device

Pairing A Phone

To begin using your Uconnect Phone, you must pair your compatible Bluetooth®-enabled mobile phone. Mobile phone pairing is the process of establishing a wireless connection between a cellular phone and the Uconnect system.

To complete the pairing process, you need to reference your mobile phone Owner's Manual. Please visit Uconnect-Phone.com for complete mobile phone compatibility information.

NOTE:

- You must have Bluetooth® enabled on your phone to complete this procedure.
- The vehicle must be in PARK.

1. Place the ignition in the ACC or ON/RUN position.
2. Push the PHONE button on the faceplate.
   - If there are no phones currently connected with the system, a pop-up appears asking if you would like to pair a mobile phone.
3. Select "Yes" to begin the pairing process.
4. Search for available devices on your Bluetooth®-enabled mobile phone.
   - Press the Settings button on your mobile phone.
   - Select "Bluetooth®" and ensure it is enabled. Once enabled, the mobile phone will begin to search for Bluetooth® connections.

Pairing A Phone

If No is selected and you still would like to pair a mobile phone, press the Settings button from the Uconnect Phone main screen.

- Select the Paired Phones button, and then press the Add Device button on the touchscreen.
- Search for available devices on your Bluetooth®-enabled mobile phone (see below). When prompted on the phone, select "Uconnect" and accept the connection request.

5. Uconnect Phone will display an in progress screen while the system is connecting.

6. When your mobile phone finds the Uconnect system, select "Uconnect."

7. When prompted on the mobile phone, accept the connection request from Uconnect Phone.

   - Some mobile phones will require you to enter the PIN number.

8. When the pairing process has successfully completed, the system will prompt you to choose whether or not this is your favorite phone. Selecting the Yes button will make this phone the highest priority. This phone will take precedence over other paired phones within range and will connect to the Uconnect system automatically when entering the vehicle. Only one mobile phone and/or one Bluetooth® audio device can be connected to the Uconnect system at a time. If the No button is selected, simply select "Uconnect" from the mobile phone/audio device Bluetooth® screen, and the Uconnect system will reconnect to the Bluetooth® device.

NOTE:
Software updates on your phone or the Uconnect system may interfere with the Bluetooth® connection. If this happens, simply repeat the pairing process. However, first, make sure to delete the device from the list of phones on your Uconnect system. Next, be sure to remove Uconnect from the list of devices in your phone's Bluetooth® settings.

Storing Names/Numbers in The Mobile Phone

Before pairing your mobile phone, you must make sure you have stored the names you want to contact in the phonebook on your mobile phone, so you can call them using the vehicle's hands-free system.

If your phonebook does not contain any names, enter new names for the most frequently used numbers.

For further details, consult your mobile phone owner's handbook.

NOTE:
The names in the phonebook which do not contain phone numbers or where both fields (name and surname) are empty will not be displayed.

Connection

The system connects automatically to the paired mobile phone with the highest priority.

To choose a specific mobile phone or Bluetooth® audio device, proceed as follows:

1. Access the Settings menu.
2. Select the Phone/Bluetooth® button.
3. Select the Paired Phones or Paired Audio list using the corresponding button on the display.
4. Select the specific device (mobile phone or Bluetooth® device).
5. Press the Connect button.
6. During the connection stage, a screen is displayed showing the progress of the operation.
7. The device connected is highlighted in the list.

Disconnection

To disconnect a specific mobile phone or Bluetooth® audio device, proceed as follows:

1. Access the Settings menu.
2. Select the Phone/Bluetooth® button.
3. Select the Paired Phones or Paired Audio list using the corresponding button on the display.
4. Select the specific device (mobile phone or Bluetooth® device).
5. Press the Disconnect button.

Deletion Of A Mobile Phone Or A Bluetooth® Audio Device

To delete a mobile phone or Bluetooth® audio device from a list, proceed as follows:

1. Access the Settings menu.
2. Select the Phone/Bluetooth® button.
3. Select the Paired Phones or Paired Audio list using the corresponding button on the display.

4. Select the device (mobile phone or Bluetooth® device).
5. Press the Delete Device button.
6. A confirmation screen will appear on the display:
   - Press the Yes button to delete the device.
   - Press the No button to cancel the operation.

Setting A Mobile Phone Or A Bluetooth® Audio Device As A Favorite

To set a mobile phone or Bluetooth® audio device as a favorite, proceed as follows:

1. Access the Settings menu.
2. Select the Phone/Bluetooth® button.
3. Select the Paired Phones or Paired Audio list using the corresponding button on the display.
4. Select the specific device (mobile phone or Bluetooth® device).
5. Press the Make Favorite button.
6. The device selected is moved to the top of the list.

Downloading A Phonebook From Your Mobile Phone

If equipped and specifically supported by your phone, Uconnect Phone asks you if you want to download names (text names) and number entries from your mobile phone's phonebook. Specific Bluetooth® enabled phones with Phonebook Access Profile may support this feature. See UconnectPhone.com for supported phones.

If equipped and specifically supported by your phone, Uconnect Phone asks you if you want to download names (text names) and number entries from your mobile phone's phonebook. Specific Bluetooth®-enabled phones with Phonebook Access Profile may support this feature.

NOTE:

- If supported, the download and update begins as soon as the Bluetooth® wireless phone connection is made to the Uconnect Phone. For example, after you start the vehicle. You may be asked for permission to initiate the phonebook download.
- A maximum of 2,000 contact names with six numbers per contact will be downloaded and updated every time a phone is connected to the Uconnect Phone.
- Depending on the maximum number of entries downloaded, there may be a short delay before the latest down-

loaded names can be used. Until then, if available, the previously downloaded phonebook is available for use.

- Only the phonebook of the currently connected mobile phone is accessible.
- Only the mobile phone's phonebook is downloaded. SIM card phonebook is not part of the mobile phonebook.
- This downloaded phonebook cannot be edited or deleted on the Uconnect Phone. These can only be edited on the mobile phone. The changes are transferred and updated to Uconnect Phone on the next phone connection.

Deletion Of Phone Data (Phonebook And Recent Calls)

Select "Delete Phone Data" on the display to delete the list of recent calls and the phonebook copy.

Making A Phone Call

Dialing The Phone Number Using The "Keyboard" Icon On The Display

Enter the phone number using the graphic keypad displayed.

Proceed as follows:

1. Press the Keyboard icon on the display and use the number buttons to enter the number.
2. Press the Call button to make a call.

Call By Saying A Phonebook Name Or Phone Number

1. Push the PHONE button on the steering wheel.
2. After the beep, say "dial" (or "call" a full name or phone number).

Recent Calls

The list of the last calls made for each of the following call types can be displayed:

- Calls received
- Calls made
- Calls without a reply
- All calls

To access these types of calls, press the Recent Calls button on the Phone menu main screen.

Making A Second Call While Current Call Is In Progress

When a phone conversation is active, a second phone call can be made as follows:

- Select the number/contact from the list of recent calls.
- Select the contact from the phonebook.
- Press the Hold button and dial the number using the graphic keyboard of the display.

Redial

To call the number/contact of last call made, press the Redial button.

Answering An Incoming Call

Call Controls

The buttons on the display allow the following phone call functions to be managed:

- Answer
- End
- Ignore
- Put on hold/resume
- Deactivate/activate the microphone
- Transfer the call
- Switch from one call to the other
- Conference/merge two active calls

Answering Or Ignoring A Call With No Call Currently In Progress

When an incoming call rings or is announced on the Uconnect system, push the Answer button on the touch-screen, or push the PHONE button on the steering wheel.

Answering Or Ignoring An Incoming Call With A Call Currently In Progress

When an incoming call rings or is announced on the Uconnect system, push the Answer button on the touch-screen, or push the PHONE button on the steering wheel to answer the call and put the ongoing call on hold.

NOTE:
Not all mobile phones may support the management of an incoming call when another phone conversation is active.

Managing Two Phone Calls

If two calls are in progress (one active and one on hold), it is possible to switch between them pressing the Call On Hold button or to merge the two calls in a conference pressing the Merge Calls button.

NOTE:
Check whether the mobile phone in use supports the management of a second call and the "Conference" mode.

Transferring/Call Continuation

Transferring

The ongoing calls can be transferred from the mobile phone to the system and vice versa without ending the call.

To transfer the call, press the Transfer button.

Call Continuation

After the engine is switched off, it is still possible to continue a phone call.

The call continues until it is ended manually or for a maximum period of about 20 minutes.

When the system is switched off, the call is transferred to the mobile phone.

Ending A Call

Press the End button on the touchscreen or the PHONE button on the steering wheel controls to end a call in progress.

Only the ongoing call is ended and any call on hold becomes the new active call.

Depending on the type of mobile phone, if the ongoing call is ended by the caller, the call on hold may not be activated automatically.

Uconnect Phone Features

Mute/Unmute

1. During a call, push the VOICE COMMAND button on the steering wheel.
2. After the beep, say “mute” or “mute off”.

Reading Messages

The system can read the messages received by the mobile phone.

To use this function, the mobile phone must support the SMS exchange function via Bluetooth®.

If this function is not supported by the phone, the corresponding message button is deactivated (greyed out) or may only accept incoming messages.

When a text message is received, the display will show a screen where the options "Listen", "Call" or "Ignore" can be selected.

Press the Message button to access the list of SMS messages received by the mobile phone. The list displays a maximum of 60 messages received.

Browsing SMS

Using the steering wheel commands, you can view and manage the last 10 SMS messages received on the instrument panel. To use this function, the mobile phone must support the SMS exchange function through Bluetooth®.

Select the PHONE button on the instrument panel menu, and then select “SMS Reader” using the arrow keys on the steering wheel controls.

The “SMS Reader” submenu allows the last 10 SMS messages to be displayed.

UCONNECT 4 WITH 7-INCH DISPLAY

Introduction

Uconnect 4 With 7-Inch Display

Uconnect 4 With 7-inch Display

NOTE:
Uconnect screen images are for illustration purposes only and may not reflect exact software for your vehicle.

1. **Radio**

   Press the Radio button on the touchscreen to enter Radio Mode. The different tuner modes; AM, FM, and SXM can be selected by pressing the corresponding buttons on the touchscreen in Radio Mode.

2. **Media**

   Press the Media button on the touchscreen to access media sources such as USB Device, AUX, and Bluetooth® as long as the requested media is present.

3. **Climate**

   Refer to "Climate Controls" in "Getting To Know Your Vehicle" for further details.

4. **Apps**

   Press the Apps button on the touchscreen to access Smartphone and Connected vehicle options.

5. **Controls**

   Press the Controls button on the touchscreen to adjust the heated and vented seats or heated steering wheel (If Equipped).

6. **Phone**

   Press the Phone button on the touchscreen to access the Uconnect Phone feature.

7. **Settings**

   Press the Settings button on the touchscreen to access the Uconnect Settings menu.

Drag & Drop Menu Bar

The Uconnect features and services in the main menu bar are easily changed for your convenience. Simply follow these steps:

Uconnect 4 Main Menu

1. Press the Apps button to open the App screen.
2. Press and hold, then drag the selected App to replace an existing shortcut in the main menu bar.

The new app shortcut, that was dragged down onto the main menu bar, will now be an active App/shortcut.

NOTE:
This feature is only available if the vehicle is in PARK.

Radio Mode

Radio Controls

The radio is equipped with the following modes:

- AM
- FM
- SiriusXM® Satellite Radio – If Equipped

Press the Radio button on the touchscreen, bottom left corner, to enter the Radio Mode. The different tuner modes, AM, FM, and SXM, can then be selected by pressing the corresponding buttons in the Radio mode.

Volume/Power Control

Push the Volume/Power control knob to turn off the screen and mute the radio. Push the Volume/Power control knob a second time to turn the screen back on and unmute the radio.

The electronic volume control turns continuously (360 degrees) in either direction, without stopping. Turning the Volume/Power control knob clockwise increases the volume, and counterclockwise decreases it.

Tune/Scroll Control

When the audio system is turned on, the sound will be set at the same volume level as last played.

Turn the rotary Tune/Scroll control knob clockwise to increase or counterclockwise to decrease the radio station frequency. Push the Enter/Browse button to choose a selection.

Screen Close

The X button on the touchscreen at the top right, provides a means to close the Direct Tune Screen. The Direct Tune Screen also auto closes if no activity occurs within a few seconds.

Seek And Direct Tune Functions

The Seek Up and Down functions are activated by pressing the double arrow buttons on the touchscreen to the right and left of the radio station display or by pressing the left Steering Wheel Audio Control up or down.

Seek Up

Press and release the Seek Up button on the touchscreen to tune the radio to the next listenable station or channel. During a Seek Up function, if the radio reaches the starting station after passing through the entire band two times, the radio will stop at the station where it began.

Fast Seek Up

Press and hold the Seek Up button on the touchscreen to advance the radio through the available stations or channels at a faster rate. The radio stops at the next available station or channel when the button on the touchscreen is released.

Seek Down

Press and release the Seek Down button on the touchscreen to tune the radio to the next listenable station or channel. During a Seek Down function, if the radio reaches the starting station after passing through the entire band two times, the radio will stop at the station where it began.

Fast Seek Down

Press and hold the Seek Down button on the touchscreen to advance the radio through the available stations or channel at a faster rate. The radio stops at the next available station or channel when the button on the touchscreen is released.

Direct Tune

Press the Tune button on the touchscreen located at the bottom of the radio screen. The Direct Tune button on the touchscreen is available in AM, FM, and SXM radio modes and can be used to direct tune the radio to a desired station or channel.

Press the available number button on the touchscreen to begin selecting a desired station. Once a number has been entered, any numbers that are no longer possible (stations that cannot be reached) will become deactivated / grayed out.

Undo

You can backspace an entry by pressing the bottom left on the touchscreen.

OK

Once the last digit of a station has been entered, press the OK button, and the Direct Tune screen will close. The system will automatically tune to that station.

The selected Station or Channel number is displayed in the Direct Tune text box.

Setting Presets

The Presets are available for all Radio Modes, and are activated by pressing any of the six Preset buttons on the touchscreen, located at the top of the screen.

When you are receiving a station that you wish to commit into memory, press and hold the desired numbered button on the touchscreen for more than two seconds or until you hear a confirmation beep.

The Radio stores up to 12 presets in each of the Radio modes. A set of six presets are visible at the top of the radio screen.

You can switch between the two radio presets by pressing the Arrow button located in the upper right of the radio touchscreen.

Browse In AM/FM

When in either AM or FM, the Browse Screen provides a means to edit the Presets List and is entered by pushing the ENTER / BROWSE button.

Scrolling Preset List

Once in the Browse Presets screen, you can scroll the preset list by rotation of the TUNE / SCROLL knob, or by pressing the Up and Down arrow keys, located on the right of the screen.

Preset Selection From List

A Preset can be selected by pressing any of the listed Presets or by pushing the ENTER/BROWSE button on the TUNE/SCROLL knob to select the currently highlighted Preset.

When selected, the radio tunes to the station stored in the Preset and returns to the main radio screen.

Deleting Presets

A Preset can be deleted in the Presets Browse screen by pressing the Trash Can icon for the corresponding Preset.

Return To Main Radio Screen

You can return to the Main Radio Screen, by pressing the X button on the touchscreen when in the Browse Presets screen.

SiriusXM® Satellite Radio Mode — If Equipped

SiriusXM® Satellite Radio uses direct satellite-to-receiver broadcasting technology to provide clear, coast to coast radio content. SiriusXM® is a subscription based service.

SiriusXM® All Access Package

All satellite radio equipped vehicles come with a one year trial to the SiriusXM® All Access package, providing over 160 channels of the best programming for all the places life takes you.

- In your vehicle — You'll get every channel available on your radio, including all the premium programming like Howard Stern, every NFL® game, every MLB® game, every NASCAR® race, Oprah Radio, and more.
- On the go — With a SiriusXM® Internet Radio subscription included with the All Access trial, you'll get SiriusXM® on your computer, smartphone, or tablet. Including:
  - A huge On Demand catalog
  - Xtra Channels featuring SiriusXM® Latino – a collection of Spanish-language channels
  - MySXM – allowing you to personalize your favorite music channels

Go to siriusxm.com/getallaccess for more information

SiriusXM® services require subscriptions, sold separately after the 12-month trial included with the new vehicle purchase. If you decide to continue your service at the end of your trial subscription, the plan you choose will automatically renew and bill at then-current rates until you call SiriusXM® at 866-635-2349 to cancel. See SiriusXM® Customer Agreement for complete terms at www.siriusxm.com. All

fees and programming subject to change. Our satellite service is available only to those at least 18 and older in the 48 contiguous USA and D.C. Our SiriusXM® satellite service is also available in PR (with coverage limitations). Our Internet radio service is available throughout our satellite service area and in AK. © 2019 SiriusXM® Radio Inc. Sirius, XM and all related marks and logos are trademarks of SiriusXM® Radio Inc. Service available in Canada; see www.siriusxm.ca.

This functionality is only available for radios equipped with a Satellite receiver. In order to receive satellite radio, the vehicle needs to be outside with a clear view to the sky.

If the screen shows Acquiring Signal, you might have to change the vehicle's position in order to receive a signal. In most cases, the satellite radio does not receive a signal in underground parking garages or tunnels.

No Subscription

Radios equipped with a Satellite receiver, require a subscription to the SiriusXM® Service. When the Radio does not have the necessary subscription, the Radio is able to receive the Pre-View channel only.

Acquiring SiriusXM® Subscription

To activate the SiriusXM® Satellite Radio subscription, U.S. residents call:

1-800-643-2112

Canadian residents call:

1-877-438-9677

NOTE:
You will need to provide the SiriusXM® ID (RID) located at the bottom of the Channel 0 screen.

The Satellite Mode is activated by a press of the SXM button on the touchscreen.

When in Satellite mode:

- The SXM button on the touchscreen is highlighted.
- The SiriusXM® Presets are displayed at the top of the screen.
- The Genre is displayed below the Presets Bar.
- The SiriusXM® Channel Number is displayed in the center.

- The Program Information is displayed at the bottom of the Channel Number.
- The SiriusXM® function buttons are displayed below the Program Information.

Tuning is done by operating the Tune Knob or by Direct Tune, similar to other Radio Bands, see Presets, browse, Tune Knob, and Direct Tune.

In addition to the tuning Operation functions common to all Radio modes, the replay, Traffic/Weather Jump, and fav button functions are available in SiriusXM® Mode.

Replay

The replay function provides a means to store and replay up to 22 minutes of music audio and 48 minutes of talk radio. Once the channel is switched, content in replay memory is lost.

Press the Replay button on the touchscreen. The play/pause, rewind/forward and live buttons will display at the top of the screen, along with the replay time.

You can exit by pressing the Replay button on the touchscreen, any time during the Replay mode.

Play/Pause

Press the Pause/Play button on the touchscreen to pause the playing of live or rewound content at any time. Play can be resumed again by pressing of the Pause/Play button on the touchscreen.

Rewind

Press the RW button on the touchscreen to rewind the content in steps of five seconds. Pressing the RW button on the touchscreen for more than two seconds rewinds the content. The Radio begins playing the content at the point at which the press is released.

Forward

Each press of the FW button on the touchscreen forwards the content in steps of five seconds. Forwarding of the content can only be done when the content is previously rewound, and therefore, can not be done for live content. A continuous press of the FW button on the touchscreen also forwards the content. The Radio begins playing the content at the point at which the press is released.

Live

Press the Live button on the touchscreen to resume playing of Live content.

Favorites

Press the Fav button on the touchscreen to activate the favorites menu, which will time out in five seconds in absence of user interaction.

You can exit the Favorites Menu by a press of the X in the top right corner.

The favorites feature enables you to set a favorite artist, or song that is currently playing. The Radio then uses this information to alert you when either the favorite song, or favorite artist are being played at any time by any of the SiriusXM® Channels.

The maximum number of favorites that can be stored in the Radio is 50.

Fav. Artist: While the song is playing to set a Favorite Artist, press the Fav button on the touchscreen and then the Fav. Artist button on the touchscreen.

Fav. Song: While the song is playing to set a Favorite Song, press the Fav button on the touchscreen and then the Fav Song button on the touchscreen.

Browse In SXM

Press the Browse button on the touchscreen to edit Presets, Favorites, Game Zone, and Jump settings, along with providing the SiriusXM® Channel List.

This Screen contains many submenus. You can exit a sub menu to return to a parent menu by pressing the Back Arrow.

All

Press the All button at the left of the Browse Screen.

Channel List

Press the Channel List, or Genre, to display all the SiriusXM® Channel Numbers. You can scroll the Channel list by pressing the Up and Down arrows, located on the right side of the screen. Scrolling can also be done by operating the TUNE/SCROLL knob.

Genre

Press the Genre button on the touchscreen to display a list of Genres. You can select any desired Genre by pressing the Genre list, the Radio tunes to a channel with the content in the selected Genre.

Presets

Press the Presets button located at the left of the Browse screen.

You can scroll the Presets list pressing the up and down arrows located at the right side of the screen. Scrolling can also be done by operating the TUNE/SCROLL knob as well.

Preset Selection

A Preset can be selected by pressing any of the listed Presets, or by pushing the ENTER/BROWSE button on the TUNE/SCROLL knob to select the currently highlighted Preset. When selected, the Radio tunes to the station stored in the Preset, and returns to the main Radio screen.

Deleting A Preset

A Preset can be deleted in the Presets Browse screen by pressing the Trash Can Icon for the corresponding Preset.

Favorites

Press the Favorites button located at the left of the Browse screen.

The Favorites menu provides a means to Edit the Favorites list and to configure the Alert Settings, along with providing a list of Channels currently airing any of the items in the Favorites list.

You can scroll the Favorites list by pressing the Up and Down arrows located at the right side of the screen. Scrolling can also be done by operating the TUNE/SCROLL knob as well.

Remove Favorites

Press the Remove Favorites tab at the top of the screen. Press the Delete All button on the touchscreen to delete all of the Favorites or press the Trash Can icon next to the Favorite to be deleted.

Alert Settings

Press the Alert Setting tab at the top of the screen. The Alert Settings menu allows you to choose from a Visual alert or Audible and Visual alert when one of your favorites is airing on any of the SiriusXM® channels.

Game Zone

Press the Game Zone button, located at the left of the Browse screen. This feature provides you with the ability to select teams, edit the selection, and set alerts.

On Air

Press the On-Air tab at the top of the screen. The On-Air list provides a list of Channels currently airing any of the items in the Selections list, and pressing any of the items in the list tunes the radio to that channel.

Select Teams

Press the Select Teams button on the touchscreen to activate the League Scroll list. Press the chosen league and a scroll list of all teams within the league will appear, then you can select a team by pressing the corresponding box. A check mark appears for all teams that are chosen.

Remove Selection

Press the Remove Selection tab at the top of the screen. Press the Delete All button on the touchscreen to delete all of the Selections or press the Trash Can Icon next to the Selection to be deleted.

Alert Settings

Press the Alert Setting tab at the top of the screen. The Alert Settings menu allows you to choose from “Alert me to on-air games upon start” or “Alert upon score update” or both when one or more of your selections is airing on any of the SiriusXM® channels.

Featured

Press the Featured button, located on the left of the Browse screen. This feature provides a list of your featured favorite stations.

Audio Settings

Press the Audio button on the Satellite Radio main menu or within the Settings main menu, to activate the Audio settings screen for adjusting Balance & Fade, Equalizer, Speed Adjusted Volume, Loudness, AUX Volume Offset, Auto Play, and Radio Off With Door.

You can return to the Radio screen by pressing the X located at the top right.

Balance & Fade

Balance & Fade

Press the Balance & Fade button on the touchscreen to Balance audio between the front speakers or fade the audio between the rear and front speakers.

Pressing the Front, Rear, Left, or Right buttons or press and drag the red Speaker Icon to adjust the Balance/Fade.

Equalizer

Equalizer

Press the Equalizer button on the touchscreen to activate the Equalizer screen.

Press the + or – buttons, or by pressing and dragging over the level bar for each of the equalizer bands. The level value, which spans between plus or minus nine, is displayed at the bottom of each of the Bands.

Speed Adjusted Volume

Speed Adjusted Volume

Press the Speed Adjusted Volume button on the touchscreen to activate the Speed Adjusted Volume screen.

The Speed Adjusted Volume is adjusted by selecting from Off, 1, 2, or 3. This alters the automatic adjustment of the audio volume with variation to vehicle speed. Volume increases automatically as speed increase to compensate for normal road noise.

Surround Sound — If Equipped

Press the On button on the touchscreen to activate Surround Sound. Press Off to deactivate this feature.

When Surround Sound is On, you can hear audio coming from every direction as in a movie theatre or home theatre system.

Surround Sound

Loudness

Loudness

Press the On button on the touchscreen to activate Loudness. Press Off to deactivate this feature.

When Loudness is On, the sound quality at lower volumes improves.

AUX Volume Offset

AUX Volume Offset

Press the AUX Volume Offset button on the touchscreen to activate the AUX Volume Offset screen.

The AUX Volume Offset is adjusted by pressing of the + and – buttons. This alters the AUX input audio volume. The level value, which spans between plus or minus three, is displayed above the adjustment bar.

Auto Play

Auto Play

Press the Auto Play button on the touchscreen to activate the Auto Play screen.

The Auto Play feature has two settings On and Off. With Auto Play on, music will begin to play from a connected device, immediately after it is connect to the radio.

Radio Off With Door

Radio Off With Door

Press the Radio Off With Door button on the touchscreen to activate the Radio Off With Door screen.

The Radio Off With Door feature, when activated, keeps the radio on until the driver or passenger door is opened, or when the Radio Off Delay selected time has expired.

Media Mode

USB/iPod® Mode

Overview

USB/iPod® Mode is entered by either inserting a USB device or iPod® and cable into the USB Port or by pressing the Select Source button on the left side of the display, and then selecting USB 1, or USB 2 (if equipped).

Seek Up /Seek Down

Press and release the Seek Up button on the touchscreen for the next selection on the USB device/iPod®. Press and release the Seek Down button on the touchscreen to return to the beginning of the current selection or to return to the beginning of the previous selection if the USB device/iPod® is within the first three seconds of the current selection.

Browse

Press the Browse button on the touchscreen to display the browse window. The left side of the browse window displays a list of ways you can browse through the contents of the USB device/iPod®. If supported by the device, you can browse by Folders, Artists, Playlists, Albums, Songs, etc. Press the desired button on the left side of the screen. The center of the browse window shows items and its sub-functions, which can be scrolled by pressing the Up and Down buttons to the right. The Tune/Scroll knob can also be used to scroll.

Media Mode

Press the Media button on the touchscreen to select the desired audio source: USB.

Repeat

Press the Repeat button on the touchscreen to toggle the repeat functionality. The Repeat button on the touchscreen is highlighted when active. The Radio will continue to play the current track, repeatedly, as long as the repeat is active. Press the Repeat button on the touchscreen a second time to turn this feature off.

Shuffle

Press the Shuffle button on the touchscreen to play the selections on the USB/iPod® device in random order to provide an interesting change of pace. Press the Shuffle button on the touchscreen a second time to turn this feature off.

Info

Press the Info button on the touchscreen to display the current track information. Press the Info button on the touchscreen a second time to cancel this feature.

Tracks

Press the Tracks button on the touchscreen to display a pop up with the Song List. The currently playing song is indicated by an arrow and lines above and below the song title. When in the Tracks List screen, you can rotate the Tune/Scroll knob to highlight a track (indicated by the line above and below the track name) and then push the Enter/Browse knob to start playing that track.

Pressing the Tracks button on the touchscreen while the pop up is displayed will close the pop up.

Audio

Refer to Radio Mode for adjusting the audio settings.

AUX Mode

Overview

AUX (Auxiliary Mode) is entered by inserting an AUX device using a cable with a 3.5 mm audio jack into the AUX port or by pressing the AUX button on the left side of the display.

Inserting Auxiliary Device

Gently insert the Auxiliary device cable into the AUX Port. If you insert an Auxiliary device with the ignition and the radio on, the unit will switch to AUX mode and begin to play when you insert the device cable.

Controlling The Auxiliary Device

The control of the auxiliary device (e.g., selecting playlists, play, fast forward, etc.) cannot be provided by the radio; use the device controls instead. Adjust the volume with the Volume/Mute rotary knob, or with the volume of the attached device.

NOTE:
The radio unit is acting as the amplifier for audio output from the Auxiliary device. Therefore, if the volume control on the Auxiliary device is set too low, there will be insufficient audio signal for the radio unit to play the music on the device.

Media Mode

Press the Media button on the touchscreen to select the desired audio source: AUX.

Audio

Refer to Radio Mode for adjusting the audio settings.

BLUETOOTH® MODE

Overview

Bluetooth® Streaming Audio (BTSA) or Bluetooth® Mode is entered by pairing a Bluetooth® device, containing music, to the Uconnect System.

Before proceeding, the Bluetooth® device must be paired to the Uconnect Phone to communicate with the Uconnect System.

NOTE:
See the pairing procedure in the Uconnect Phone section for more details.

To access Bluetooth® mode, press the Select Source button on the left side of the display, and then select Bluetooth®.

Bluetooth® Mode

Seek Up ⏭ /Down ⏮

Press and release the Seek Up ⏭ button on the touchscreen for the next selection on the Bluetooth® device. Press and release the Seek Down ⏮ button on the touchscreen to return to the beginning of the current selection, or return to the beginning of the previous selection if the Bluetooth® device is within the first second of the current selection.

Media Mode

Press the Media button on the touchscreen to select the desired audio source: Bluetooth®.

Tracks

If the Bluetooth® device supports this feature, press the Tracks button on the touchscreen to display a pop up with the Song List. The currently playing song is indicated by a red arrow and lines above and below the song title.

Pressing the Tracks button on the touchscreen while the pop up is displayed will close the pop up.

Audio

Refer to Radio Mode for adjusting the audio settings.

Android Auto™ & Apple CarPlay® — If Equipped

Android Auto™

NOTE:
Feature availability depends on your carrier and mobile phone manufacturer. Some Android Auto™ features may or may not be available in every region and/or language.

Android Auto™ is a feature of your Uconnect system, and your Android 5.0 Lollipop™, or higher, powered smartphone with a data plan, that allows you to project your smartphone and a number of its apps onto the touchscreen radio display. Android Auto™ automatically brings you useful information, and organizes it into simple cards that appear just when they are needed. Android Auto™ can be used with Google's best-in-class speech technology, the steering wheel controls, the knobs and buttons on your radio faceplate, and the radio display's touchscreen to control many of your apps. To use Android Auto™, follow the following procedure:

1. Download the Android Auto™ app from the Google Play store on your Android™-powered smartphone.

2. Connect your Android™-powered smartphone to one of the media USB ports in your vehicle. If the Android Auto™ app was not downloaded, the first time you plug your device in, the app will begin to download.

NOTE:
Be sure to use the factory-provided USB cable that came with your phone, as aftermarket cables may not work.

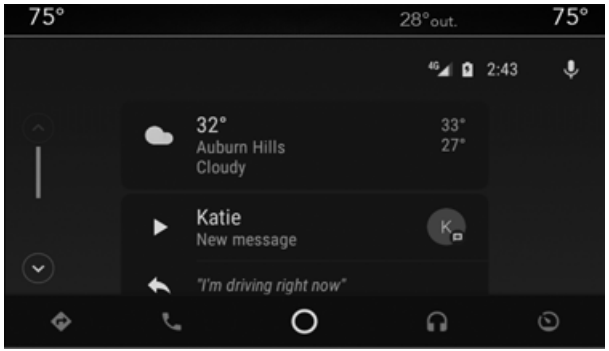

Android Auto

3. Once the device is connected and recognized, the "Phone" icon on the drag & drop menu bar changes to the Android Auto™ Icon. Android Auto™ should launch, but if it does not, refer to "Android Auto™ And Apple CarPlay® Tips And Tricks" in this section for the procedure to enable the feature "AutoShow". You can also launch it by touching the Android Auto™ icon on the touchscreen.

Once Android Auto™ is up and running on your Uconnect system, the following features can be utilized using your smartphone's data plan:

- Google Maps™ for navigation
- Google Play Music, Spotify, iHeart Radio, etc. for music
- Handsfree Calling, and Texting for communication
- Hundred of compatible apps

NOTE:
To use Android Auto™, make sure you are in an area with cellular coverage. Android Auto™ may use cellular data and your cellular coverage is shown in the upper right corner of the radio screen.

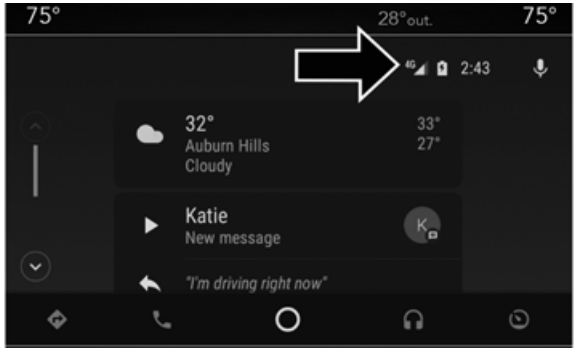

Signal Strength

NOTE:
Requires compatible smartphone running Android™ 5.0 Lollipop or higher and download app on Google Play. Android™, Android Auto™ and Google Play are trademarks of Google Inc.

Android Auto™ Maps

Push and hold the VR button on the steering wheel or tap the microphone icon to ask Google to take you to a desired destination by voice. You can also touch the Navigation icon in Android Auto™ to access Google Maps™.

NOTE:
If the VR button is not held, and is only pushed, the built-in Uconnect VR prompts you and any navigation command said launches the built-in Uconnect navigation system.

While using Android Auto™, Google Maps™ provides voice-guided:

- Navigation
- Live traffic information
- Lane guidance

Android Auto Maps

For further information, refer to www.android.com/auto/ (U.S. Residents) https://www.android.com/intl/en_ca/auto (Canadian Residents).

For further information on the navigation function, please refer to https://support.google.com/android or https://support.google.com/androidauto/.

Android Auto™ Music

Android Auto™ allows you to access and stream your favorite music with apps like Google Play Music, iHeart-Radio, and Spotify. Using your smartphone's data plan, you can stream endless music on the road.

NOTE:
Music apps, playlists, and stations must be set up on your smartphone prior to using Android Auto™, for them to work with Android Auto™.

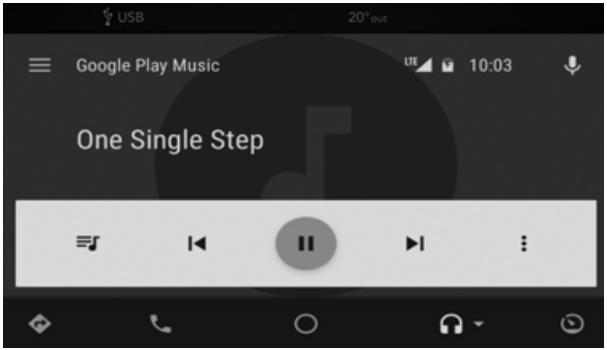

Android Auto Music

NOTE:
To see the metadata for the music playing through Android Auto™, select the Uconnect System's media screen.

For further information refer to https://support.google.com/androidauto.

Android Auto™ Communication

With Android Auto™ connected, press and hold the VR button on the steering wheel to activate voice recognition specific to the Android Auto™. This will allow you to send and reply to text messages, have incoming text messages read out loud, and place and receive hands-free calls.

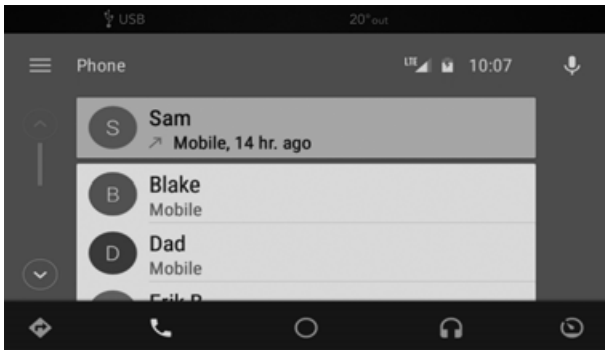

Contacts

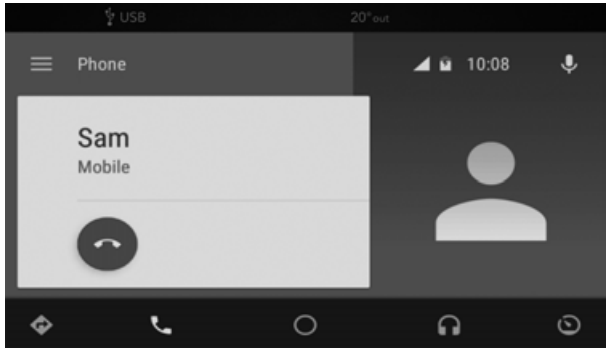

Call In Progress

Android Auto™ Apps

The Android Auto™ App will display all the compatible apps that are available to use with Android Auto™, every time it is launched. You must have the compatible app downloaded, and you must be signed in to the app for it to work with Android Auto™.

Refer to g.co/androidauto to see the latest list of available apps for Android Auto™.

Apple CarPlay® Integration

NOTE:
Feature availability depends on your carrier and mobile phone manufacturer. Some Apple CarPlay® features may or may not be available in every region and/or language.

Uconnect works seamlessly with Apple CarPlay®, the smarter, more secure way to use your iPhone® in the car, and stay focused on the road. Use your Uconnect Touch-screen display, the vehicle's knobs and controls, and your voice with Siri to get access to Apple Music®, Maps, Messages, and more.

To use Apple CarPlay®, make sure you are using iPhone® 5 or later, have Siri enabled in Settings, ensure your iPhone® is unlocked for the very first connection only, and then use the following procedure:

1. Connect your iPhone® to one of the media USB ports in your vehicle.

NOTE:
Be sure to use the factory-provided Lightning cable that came with your phone, as aftermarket cables may not work.

2. Once the device is connected and recognized, the "Phone" icon on the drag & drop menu bar changes to the Apple CarPlay® Icon. Apple CarPlay® should launch, but if not, refer to "Android Auto™ And Apple CarPlay® Tips And Tricks" in this section for the procedure to enable the feature "AutoShow". You can also touch the Apple CarPlay® icon on the touchscreen to launch it.

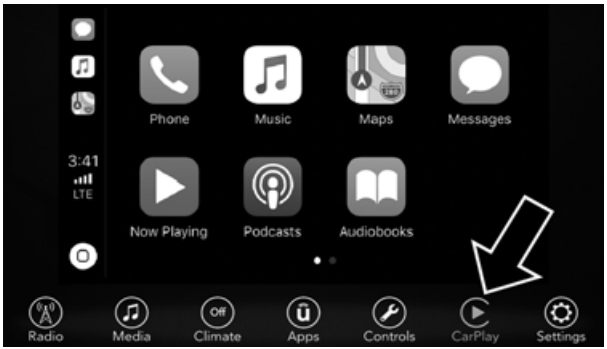

Apple CarPlay®

Once Apple CarPlay® is up and running on your Uconnect system, the following features can be utilized using your iPhone's® data plan:

- Phone
- Music
- Messages
- Maps

NOTE:
To use Apple CarPlay® make sure that cellular data is turned on, and that you are in an area with cellular coverage. Your data and cellular coverage is shown on the left side of the radio screen.

NOTE:
Requires compatible iPhone®. See dealer for phone compatibility. Data plan rates apply. Vehicle user interface is a product of Apple®. Apple CarPlay® is a trademark of Apple® Inc. iPhone® is a trademark of Apple® Inc., registered in the US and other countries. Apple® terms of use and privacy statements apply.

Apple CarPlay® Phone

With Apple CarPlay®, press and hold the VR button on the steering wheel to activate a Siri voice recognition session. You can also press and hold the Home button within Apple CarPlay® to start talking to Siri. This allows you to make calls or listen to voice mail as you normally would using Siri on your iPhone®.

NOTE:
Only temporarily pushing the VR button on the steering wheel launches a built-in VR session, not a Siri session, and it will not function with Apple CarPlay®.

Apple CarPlay® Music

Apple CarPlay® allows you to access all your artists, playlists, and music from iTunes®. Using your iPhone's® data plan, you can also use select third party audio apps including music, news, sports, podcasts and more.

Apple CarPlay® Messages

Just like Phone, Apple CarPlay® allows you to use Siri to send or reply to text messages. Siri can also read incoming text messages, but driver's will not be able to read messages, as everything is done via voice.

Apple CarPlay® Maps

To use your Apple Maps® for navigation on your Uconnect system, launch Apple CarPlay®, and push and hold the VR button on the steering wheel to use Siri to set your desired destination. Alternatively, choose a nearby destination by pressing Destinations and selecting a category, by launching Siri from the destinations page, or even by typing in a destination.

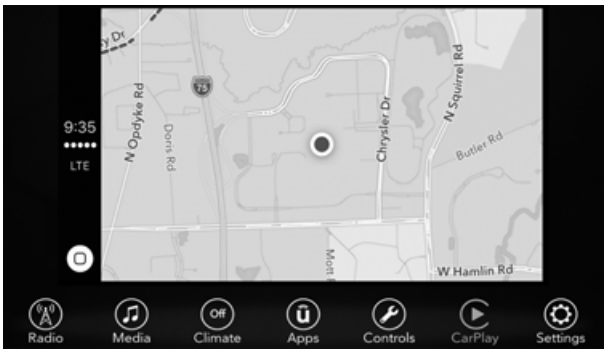

Apple CarPlay® Maps

NOTE:
If the Voice Recognition (VR) button is not held, and is only pushed, the built-in Uconnect VR prompts you and any navigation command said launches the built-in Uconnect navigation system.

Apple CarPlay® Apps

To use a compatible app with Apple CarPlay®, you must have the compatible app downloaded, and you must be signed in to the app.

Refer to http://www.apple.com/ios/carplay/ (U.S. Residents) or https://www.apple.com/ca/ios/carplay/ (Canadian Residents) to see the latest list of available apps for Apple CarPlay®.

Android Auto™ And Apple CarPlay® Tips And Tricks

AutoPlay

AutoPlay is a feature of the Uconnect system that automatically begins playing music off of the connected device, as soon as it is connected. This feature can be turned on or off in the Uconnect Settings, within the Audio Settings category. It's default setting is on.

NOTE:
AutoPlay® is not supported by Android Auto™.

AutoShow

AutoShow is a feature of the Uconnect system that automatically launches and displays Android Auto™/Apple CarPlay® when the phone is initially connected to the USB media port. This feature can be turned on and off in the Uconnect Settings, within the Display Settings category. The default setting is on.

Android Auto Automatic Bluetooth® Pairing

After connecting to Android Auto™ for the first time and undergoing the setup procedure, the smartphone will automatically pair to the Uconnect system via Bluetooth® without any setup required every time it is within range, if Bluetooth® is turned on.

NOTE:
Android Auto™ features cannot be used with Bluetooth®, a USB connection is required for its use. Android Auto™ uses both Bluetooth® and USB connections to function, and the connected device will be unavailable to other devices when connected using Android Auto™.

Multiple Devices Connecting To The Uconnect System

It is possible to have multiple devices connected to the Uconnect system. For example, if using Android Auto™/Apple CarPlay®, the connected device will be the one that will be used to place hands-free phone calls or send hands-free text messages. However, another device can also be paired to the Uconnect system, via Bluetooth®, as an audio source, so the passenger can stream music.

NOTE:

- If using a Samsung device, every time it is connected to a media USB, and there is another device plugged in, you

will need to manually change the configuration of the USB connection in order for the Samsung device to send data.

- The Uconnect 4 built-in media functions will be unavailable when Android Auto™/Apple CarPlay® are in use.

Phone Mode

Overview

Uconnect 4 With 7-inch Display Radio Phone Menu

1 — Favorite Contacts
2 — Mobile Phone Battery Life
3 — Currently Paired Mobile Phone
4 — Siri
5 — Mute Microphone
6 — Transfer To/From Uconnect System
7 — Conference Call*
8 — Phone Settings
9 — Text Messaging**
10 — Direct Dial Pad
11 — Recent Call Log
12 — Browse Phone Book Entries
13 — End Call
14 — Call/Redial/Hold
15 — Do Not Disturb
16 — Reply With Text Message
* — Conference Call feature only available on Global System Mobile (GSM) mobile devices
** — Text messaging feature not available on all mobile phones [requires Bluetooth® Message Access Profile (MAP) profile]

Uconnect Phone is a voice-activated, hands-free, in-vehicle communications system. Uconnect Phone allows you to dial a phone number with your mobile phone.

Uconnect Phone supports the following features:

Voice Activated Features:

- Hands-Free dialing via Voice ("Call John Smith Mobile" or, "Dial 248-555-1212").
- Hands-Free text to speech listening of your incoming SMS messages.

- Hands-free text message reply. (Forward one of 18 pre-defined SMS messages to incoming calls/text messages).
- Redialing last dialed numbers ("Redial").
- Calling back the last incoming call number ("Call Back").
- View call logs on screen ("Show incoming calls," "Show Outgoing calls," "Show missed Calls," "Show Recent Calls").
- Searching contacts phone number ("Search for John Smith Mobile").

NOTE:
Examples of Voice Commands are provided throughout this manual. For quick use, go to the Voice Command Quick Reference Section.

Screen Activated Features

- Dialing via keypad using touchscreen.
- Viewing and calling contacts from phonebooks displayed on the touchscreen.
- Setting favorite contact phone numbers so they are easily accessible on the main phone screen.
- Viewing and calling contacts from recent call logs.
- Reviewing your recent incoming SMS.
- Listen to music on your Bluetooth® device via the touchscreen.
- Pairing up to 10 phones/audio devices for easy access to connect to them quickly.

NOTE:
Your phone must be capable of SMS messaging via Bluetooth® for messaging features to work properly.

Your mobile phone's audio is transmitted through your vehicle's audio system; the system automatically mutes your radio when using the Uconnect Phone.

For Uconnect customer support:

- U.S. residents - visit UconnectPhone.com or call:

  877-855-8400
- Canadian residents - (English) call:

  800-465-2001

  or (French) call:

  800-387-9983
- Visit UconnectPhone.com

Uconnect Phone allows you to transfer calls between the system and your mobile phone as you enter or exit your vehicle and enables you to mute the system's microphone for private conversation.

WARNING!
ALWAYS drive safely with your hands on the steering wheel. You have full responsibility and assume all risks related to the use of the Uconnect features and applications in this vehicle. Only use Uconnect when it is safe to do so. Failure to do so may result in an accident involving serious injury or death.

The Uconnect Phone is driven through your Bluetooth® "Hands-Free Profile" mobile phone. Uconnect features Bluetooth® technology - the global standard that enables different electronic devices to connect to each other without wires or a docking station, so Uconnect Phone works no matter where you stow your mobile phone (be it your purse, pocket, or briefcase), as long as your phone is turned on and has been paired to the vehicle's Uconnect Phone. The Uconnect Phone allows up to 10 mobile phones or audio devices to be linked to the system. Only one linked (or paired) mobile phone and one audio device can be used with the system at a time.

Uconnect Phone Button

The Uconnect Phone button on your steering wheel is used to get into the phone mode and make calls, show recent, incoming, outgoing calls, view phonebook etc.

Uconnect Voice Command Button

The Uconnect Voice Command button on your steering wheel is only used for "barge in" and when you are already in a call and you want to send tones or make another call.

The button on your steering wheel is also used to access the Voice Commands for the Uconnect Voice Command features if your vehicle is equipped. Please see the Uconnect Voice Command section for direction on how to use the button.

The Uconnect Phone is fully integrated with the vehicle's audio system. The volume of the Uconnect Phone can be adjusted either from the radio volume control knob or from the steering wheel radio control.

Phone Operation

Operation

Voice commands can be used to operate the Uconnect Phone and to navigate through the Uconnect Phone menu structure. Voice commands are required after most Uconnect Phone prompts. There are two general methods for how Voice Command works:

1. Say compound commands like "Call John Smith mobile".
2. Say the individual commands and allow the system to guide you to complete the task.

You will be prompted for a specific command and then guided through the available options.

- Prior to giving a voice command, one must wait for the beep, which follows the "Listen" prompt or another prompt.
- For certain operations, compound commands can be used. For example, instead of saying "Call" and then "John Smith" and then "mobile", the following compound command can be said: "Call John Smith mobile."
- For each feature explanation in this section, only the compound command form of the voice command is given. You can also break the commands into parts and say each part of the command when you are asked for it. For example, you can use the compound command form voice command "Search for John Smith," or you can break the compound command form into two voice commands: "Search Contact" and when asked "John Smith." Please remember, the Uconnect Phone works best when you talk in a normal conversational tone, as if speaking to someone sitting a few feet/meters away from you.

Natural Speech

Your Uconnect Phone Voice system uses a Natural Language Voice Recognition (VR) engine.

Natural speech allows the user to speak commands in phrases or complete sentences. The system filters out certain non-word utterances and sounds such as "ah" and "eh." The system handles fill-in words such as "I would like to."

The system handles multiple inputs in the same phrase or sentence such as "make a phone call" and "to Kelly Smith". For multiple inputs in the same phrase or sentence, the system identifies the topic or context and provides the associated follow-up prompt such as "Who do you want to call?" in the case where a phone call was requested but the specific name was not recognized.

The system utilizes continuous dialog; when the system requires more information from the user it will ask a question to which the user can respond without pushing the Voice Command button on your steering wheel.

Help Command

If you need assistance at any prompt, or if you want to know your options at any prompt, say “Help” following the beep.

To activate the Uconnect Phone from idle, simply push the Phone button (if active) on your steering wheel and say a command or say “help.” All Uconnect Phone sessions begin with a push of the VR button or the Phone button (if active) on the radio control head.

Cancel Command

At any prompt, after the beep, you can say “Cancel” and you will be returned to the main menu.

You can also push the VR button or Phone button (if active) on your steering wheel when the system is listening for a command and be returned to the main or previous menu.

Pair (Link) Uconnect Phone To A Mobile Phone

To begin using your Uconnect Phone, you must pair your compatible Bluetooth® enabled mobile phone. Mobile phone pairing is the process of establishing a wireless connection between a cellular phone and the Uconnect system.

To complete the pairing process, you need to reference your mobile phone Owner's Manual. Please visit Uconnect-Phone.com for complete mobile phone compatibility information.

NOTE:

- You must have Bluetooth® enabled on your phone to complete this procedure.
- The vehicle must be in PARK.

1. Place the ignition in the ACC or ON position.
2. Press the Phone button in the Menu Bar on the touch-screen.

NOTE:
If there are no phones currently connected with the system, a pop-up will appear asking if you would like to pair a mobile phone.

3. Select “Yes” to begin the pairing process.

4. Search for available devices on your Bluetooth® enabled mobile phone.
   - Press the Settings button on your mobile phone.
   - Select Bluetooth® and ensure it is enabled. Once enabled, the mobile phone will begin to search for Bluetooth® connections.

Pairing A Phone

If No is selected, and you still would like to pair a mobile phone, press the "Phone Settings" button from the Uconnect Phone main screen.
   - Select "Paired Phones", and then press the Add Device button on the touchscreen.
   - Search for available devices on your Bluetooth® enabled mobile phone (see below). When prompted on the phone, select "Uconnect" and accept the connection request.

5. Uconnect Phone will display an in progress screen while the system is connecting.

6. When your mobile phone finds the Uconnect system, select "Uconnect."

7. When prompted on the mobile phone, accept the connection request from Uconnect Phone.

NOTE:
Some mobile phones will require you to enter the PIN number.

8. When the pairing process has successfully completed, the system will prompt you to choose whether or not this is your favorite phone. Selecting "Yes" will make this phone the highest priority. This phone will take precedence over other paired phones within range and will connect to the Uconnect system automatically when entering the vehicle. Only one mobile phone and/or one Bluetooth® audio device can be connected to the Uconnect system at a time. If "No" is selected, simply select "Uconnect" from the mobile phone/audio device Bluetooth® screen, and the Uconnect system will reconnect to the Bluetooth® device.

NOTE:
Software updates on your phone or the Uconnect system may interfere with the Bluetooth® connection. If this happens, simply repeat the pairing process. However, first, make sure to delete the device from the list of phones on your Uconnect system. Next, be sure to remove Uconnect from the list of devices in your phone's Bluetooth® settings.

Pair Additional Mobile Phones

1. Press the Phone Settings button on the touchscreen from the Phone main screen.
2. Press the Add Device button on the touchscreen.
3. Search for available devices on your Bluetooth® enabled mobile phone. When prompted on the phone, enter the name and PIN shown on the Uconnect screen.
4. Uconnect Phone will display an in process screen while the system is connecting.
5. When the pairing process has successfully completed, the system will prompt you to choose whether or not this is your favorite phone. Selecting "Yes" will make this phone the highest priority. This phone will take precedence over other paired phones within range.

NOTE:
For phones which are not made a favorite, the phone priority is determined by the order in which it was paired. The latest phone paired will have the higher priority.

You can also use the following VR commands to bring up the Paired Phone screen from any screen on the radio:

- "Show Paired Phones" or
- "Connect My Phone"

Pair A Bluetooth® Streaming Audio Device

1. Press the Media button on the touchscreen to begin.
2. Change the Source to Bluetooth®.
3. Press the Bluetooth® button on the touchscreen to display the Paired Audio Devices screen.
4. Press the Add Device button on the touchscreen.

NOTE:
If there is no device currently connected with the system, a pop-up will appear.

5. Search for available devices on your Bluetooth®-enabled audio device. When prompted on the device, enter the PIN shown on the Uconnect screen.
6. Uconnect Phone will display an in process screen while the system is connecting.
7. When the pairing process has successfully completed, the system will prompt you to choose whether or not this is your favorite device. Selecting "Yes" will make this device the highest priority. This device will take precedence over other paired devices within range.

NOTE:
For devices which are not made a favorite, the device priority is determined by the order in which it was paired. The latest device paired will have the higher priority.

You can also use a following VR command to bring up a list of paired audio devices:

- "Show Paired Phones" or
- "Connect My Phone"

Connecting To A Particular Mobile Phone Or Audio Device After Pairing

Uconnect Phone will automatically connect to the highest priority paired phone and/or Audio Device within range. If you need to choose a particular phone or Audio Device follow these steps:

1. Press the Phone Settings button on the touchscreen.
2. Press the Paired Phones or Paired Audio Sources button on the touchscreen.
3. Press to select the particular Phone or the particular Audio Device. A pop-up menu will appear, press "Connect Phone".
4. Press the X button to exit out of the Settings screen.

Disconnecting A Phone Or Audio Device

1. Press the Phone Settings button on the touchscreen.
2. Press the Paired Phones or Paired Audio Devices button on the touchscreen.
3. Press the Settings button located to the right of the device name.
4. The options pop-up will be displayed.
5. Press the Disconnect Device button on the touchscreen.
6. Press the X button to exit out of the Settings screen.

Deleting A Phone Or Audio Device

1. Press the Phone Settings button on the touchscreen.
2. Press the Pair Phones or Paired Audio Devices button on the touchscreen.
3. Press the Settings button located to the right of the device name for a different Phone or Audio Device than the currently connected device.
4. The options pop-up will be displayed.
5. Press the Delete Device button on the touchscreen.
6. Press the X button to exit out of the Settings screen.

Making A Phone Or Audio Device A Favorite

1. Press the Phone Settings button on the touchscreen.
2. Press the Paired Phones or Paired Audio Devices button on the touchscreen.
3. Press the Settings button located to the right of the device name.
4. The options pop-up will be displayed.
5. Press the Make Favorite button on the touchscreen; you will see the chosen device move to the top of the list.
6. Press the X to exit out of the Settings screen.

Phonebook Download (Automatic Phonebook Transfer From Mobile Phone) — If Equipped

If equipped and specifically supported by your phone, Uconnect Phone automatically downloads names (text names) and number entries from the mobile phone's phone-

book. Specific Bluetooth® Phones with Phonebook Access Profile may support this feature.

See Uconnect website, UconnectPhone.com, for supported phones.

- To call a name from a downloaded mobile phone book, follow the procedure in the "Uconnect Voice Recognition Quick Tips" section.
- Automatic download and update of a phone book, if supported, begins as soon as the Bluetooth® wireless phone connection is made to the Uconnect Phone, for example, after you start the vehicle.
- A maximum of 5,000 contact names with four numbers per contact will be downloaded and updated every time a phone is connected to the Uconnect Phone.
- Depending on the maximum number of entries downloaded, there may be a short delay before the latest downloaded names can be used. Until then, if available, the previously downloaded phonebook is available for use.
- Only the phonebook of the currently connected mobile phone is accessible.
- This downloaded phonebook cannot be edited or deleted on the Uconnect Phone. These can only be edited on the mobile phone. The changes are transferred and updated to Uconnect Phone on the next phone connection.

Managing Your Favorites

There are two ways you can add an entry to your Favorites.

1. After loading the mobile phonebook, press the Favorites button on the touchscreen, and then press one of the +Add favorite Contact buttons that appears on the list.
2. After loading the mobile phonebook, select Contacts from the Phone main screen, and then select the appropriate number. Press the down arrow symbol button next to the selected number to display the options pop-up. In the pop-up select Add to Favorites.

NOTE:
If the Favorites list is full, you will be asked to remove an existing favorite.

To Remove A Favorite

1. To remove a Favorite, select "Favorites" from the Phone main screen.
2. Next select the down arrow icon next to the contact you want to remove from your favorites. This will bring up the options for that favorite contact.
3. Press Remove from Favs.

Phone Call Features

The following features can be accessed through the Uconnect Phone if the feature(s) are available and supported by Bluetooth® on your mobile service plan. For example, if your mobile service plan provides three-way calling, this feature can be accessed through the Uconnect Phone. Check with your mobile service provider for the features that you have.

Ways To Initiate A Phone Call

Listed below are all the ways you can initiate a phone call with Uconnect Phone.

- Redial
- Dial by pressing in the number
- Voice Commands (Dial by Saying a Name, Call by Saying a Phonebook Name, Redial or Call Back)
- Favorites
- Mobile Phonebook
- Recent Call Log
- SMS Message Viewer

Dial By Saying A Number

1. Push the VR button on your steering wheel to begin.
2. After the "Listening" prompt and the following beep, say "Dial 151-123-4444."
3. The Uconnect Phone will dial the number 151-123-4444.

Call By Saying A Phonebook Name

1. Push the VR button on your steering wheel to begin.
2. After the "Listening" prompt and the following beep, say "Call John Doe Mobile."
3. The Uconnect Phone will dial the number associated with John Doe, or if there are multiple numbers it will ask which number you want to call for John Doe.

Call Controls

The touchscreen allows you to control the following call features:

- Answer
- End
- Ignore

- Hold/unhold
- Mute/unmute
- Transfer the call to/from the phone
- Swap two active calls
- Join two active calls together

Touch-Tone Number Entry

1. Press the Phone button on the touchscreen.
2. Press the Dial button on the touchscreen.
3. The Touch-Tone screen will be displayed.
4. Use the numbered buttons on the touchscreens to enter the number and press Call.

If your vehicle has two or three buttons on the steering wheel (VR, Phone Send, and Phone End) press the VR button to send a touch-tone and say "Send 1234#" or you can say "Send Voicemail Password" if Voicemail password is stored in your mobile phonebook.

Recent Calls

You may browse a list of the most recent of each of the following call types:

- All Calls
- Incoming Calls
- Outgoing Calls
- Missed Calls

These can be accessed by pressing the recent calls button on the Phone main screen.

You can also push the VR button on your steering wheel and say "Show my incoming calls" from any screen and the incoming calls will be displayed.

NOTE:
Incoming can also be replaced with "Outgoing," "Recent", or "Missed."

Answer Or Ignore An Incoming Call — No Call Currently In Progress

When you receive a call on your mobile phone, the Uconnect Phone will interrupt the vehicle audio system. Push the Phone button on the steering wheel to accept the call. You can also press the Answer button on the touchscreen or press the caller ID box.

Answer Or Ignore An Incoming Call — Call Currently In Progress

If a call is currently in progress and you have another incoming call, you will hear the same network tones for call waiting that you normally hear when using your mobile phone. Press the Uconnect Phone button on the steering wheel, answer button on the touchscreen or caller ID box to place the current call on hold and answer the incoming call.

NOTE:
The Uconnect Phone compatible phones in the market today do not support rejecting an incoming call when another call is in progress. Therefore, the user can only answer an incoming call or ignore it.

Do Not Disturb

With Do Not Disturb, you can disable notifications from incoming calls and texts, allowing you to keep your eyes on the road and hands on the wheel. For your convenience, there is a counter display to keep track of your missed calls and text messages while you were using Do Not Disturb.

Do Not Disturb can automatically reply with a text message, a call, or both when declining an incoming call and send it to voicemail.

Automatic reply messages can be:

- "I am driving right now, I will get back to you shortly."
- Create a custom auto reply message up to 160 characters.

NOTE:
Only the first 25 characters can be seen on the touchscreen while typing a custom message.

While in Do Not Disturb, Conference Call can be selected so you can still place a second call without being interrupted by incoming calls.

NOTE:

- Reply with text message is not compatible with iPhones®.
- Auto reply with text message is only available on phones that support Bluetooth® MAP.

Place/Retrieve A Call From Hold

During an active call, press the Hold button on the Phone main screen.

Making A Second Call While Current Call Is In Progress

You can place a call on hold by pressing the Hold button on the Phone main screen, then dial a number from the dialpad, recent calls, SMS Inbox or from the phonebooks. To go back to the first call, refer to "Toggling Between Calls" in this section. To combine two calls, refer to "Join Calls" in this section.

Toggling Between Calls

If two calls are in progress (one active and one on hold), press the Swap button on the Phone main screen. Only one call can be placed on hold at a time.

You can also push the Phone button to toggle between the active and held phone call.

Join Calls

When two calls are in progress (one active and one on hold), press the Join Calls button on the Phone main screen to combine all calls into a Conference Call.

Call Termination

To end a call in progress, momentarily press the Phone End button on the touchscreen or the Phone End button on the steering wheel. Only the active call(s) will be terminated and if there is a call on hold, it will become the new active call.

Redial

Press the Redial button on the touchscreen, or push the VR button and after the "Listening" prompt and the following beep, say "Redial."

The Uconnect Phone will call the last number that was dialed from your mobile phone.

Call Continuation

Call continuation is the progression of a phone call on the Uconnect Phone after the vehicle ignition has been switched to OFF.

NOTE:
The call will remain within the vehicle audio system until the phone becomes out of range for the Bluetooth® connection. It is recommended to press the Transfer button on the touch-screen when leaving the vehicle.

Browsing SMS

Using the steering wheel commands, you can view and manage the last 10 SMS messages received on the instrument panel. To use this function, the mobile phone must support the SMS exchange function through Bluetooth®.

Select the PHONE button on the instrument panel menu, and then select "SMS Reader" using the arrow keys on the steering wheel controls.

The "SMS Reader" submenu allows the last 10 SMS messages to be displayed.

Advanced Phone Connectivity

Transfer Call To And From Mobile Phone

The Uconnect Phone allows ongoing calls to be transferred from your mobile phone to the Uconnect Phone without terminating the call. To transfer an ongoing call from your connected mobile phone to the Uconnect Phone or vice versa, press the Transfer button on the Phone main screen.

Connect Or Disconnect Link Between The Uconnect Phone And Mobile Phone

If you would like to connect or disconnect the Bluetooth connection between a Uconnect Phone paired mobile phone and the Uconnect Phone, follow the instructions described in your mobile phone User's Manual.

Things You Should Know About Your Uconnect Phone

Voice Command

For the best performance:

- Adjust the rearview mirror to provide at least ½ inch (1 cm) gap between the overhead console (if equipped) and the mirror.
- Always wait for the beep before speaking.
- Speak normally, without pausing, just as you would speak to a person sitting a few feet/meters away from you.
- Ensure that no one other than you is speaking during a voice command period.

Performance is maximized under:

- Low-To-Medium Blower Setting
- Low-To-Medium Vehicle Speed
- Low Road Noise
- Smooth Road Surface
- Fully Closed Windows
- Dry Weather Condition

WARNING!
ALWAYS drive safely with your hands on the wheel. You have full responsibility and assume all risks related to the use of the Uconnect features and applications in this vehicle. Only use Uconnect when it is safe to do so. Failure to do so may result in an accident involving serious injury or death.

Even though the system is designed for many languages and accents, the system may not always work for some.

NOTE:
It is recommended that you do not store names in your favorites phonebook while the vehicle is in motion.

Phonebook (Mobile and Favorites) name recognition rate is optimized when the entries are not similar. You can say "O" (letter "O") for "0" (zero).

Even though international dialing for most number combinations is supported, some shortcut dialing number combinations may not be supported.

Far End Audio Performance

Audio quality is maximized under:

- Low-To-Medium Blower Setting
- Low-To-Medium Vehicle Speed
- Low Road Noise
- Smooth Road Surface
- Fully Closed Windows
- Dry Weather Conditions
- Operation From The Driver's Seat

Performance such as audio clarity, echo, and loudness to a large degree rely on the phone and network, and not the Uconnect Phone.

Echo at the far end can sometimes be reduced by lowering the in-vehicle audio volume.

Bluetooth® Communication Link

Mobile phones have been found to lose connection to the Uconnect Phone. When this happens, the connection can generally be re-established by switching the mobile phone OFF/ON. Your mobile phone is recommended to remain in Bluetooth® ON mode.

Power-Up

After switching the ignition key from OFF to either the ON/RUN or ACC position, or after a language change, you must wait at least 15 seconds prior to using the system.

OFF-ROAD PAGES — IF EQUIPPED

Your vehicle is equipped with Off-Road Pages, which provides the vehicle status while operating on off-road conditions. It supplies information relating to the vehicle ride height, the status of the transfer case, the pitch and roll of the vehicle (if equipped).

To access Off-Road Pages, press the Apps button on the touchscreen, and then select Off-Road Pages.

Main Menu

1 — Off-Road Pages App
2 — Uconnect Apps Button

Off-Road Pages Status Bar

The Off-Road Pages Status Bar is located along the bottom of Off-Road Pages and is present in each of the three selectable page options. It provides information for the following items:

- Transfer Case Status
- Latitude/Longitude
- Altitude of the vehicle
- Status of Selec-Speed Control and Selected Speed in MPH (km/h)

Status Bar 2WD/4WD

1 — Transfer Case Status
2 — Offroad+ Status
3 — Latitude/Longitude
4 — Altitude

Pitch & Roll

The Pitch & Roll page displays the vehicle's current pitch (angle up and down) and roll (angle side to side) in degrees.The pitch & roll gauge provide a visualization of the current vehicle angle.

Pitch And Roll Menu 2WD/4WD

1 — Current Pitch
2 — Current Roll

Drivetrain

The Drivetrain page displays information concerning the vehicle's drivetrain.

The following information is displayed:

- Steering angle in degrees
- Status of Transfer Case
- Status of Front Axles — If Equipped
- Status of the Rear Axles — If Equipped

Drivetrain Menu 2WD/4WD

1 — Steering Angle
2 — Sway Bar
3 — Front Axle Locker Status
4 — Rear Axle Locker Status

Accessory Gauge

The Accessory Gauge page displays the current status of the vehicle's Coolant Temperature, Oil Temperature, Oil Pressure (Gas Vehicles Only), Transmission Temperature, and Battery Voltage.

Accessory Gauge Menu 2WD/4WD

1 — Coolant Temperature
2 — Oil Temperature
3 — Oil Pressure
4 — Battery Voltage
5 — Transmission Temperature (Automatic Transmission Only)

STEERING WHEEL AUDIO CONTROLS

The remote sound system controls are located on the rear surface of the steering wheel. Reach behind the wheel to access the switches.

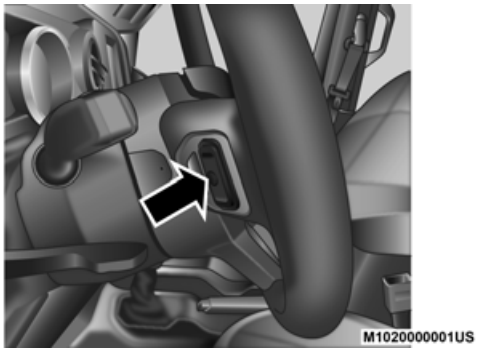

Audio Controls (Back View Of Steering Wheel)

The right-hand control is a rocker-type switch with a push-button in the center and controls the volume and mode of the sound system. Pushing the top of the rocker switch increases the volume, and pushing the bottom of the rocker switch decreases the volume.

Pushing the center button will make the radio switch between the various modes available (AM/FM/SAT/USB/AUX, etc.).

The left-hand control is a rocker-type switch with a push-button in the center. The function of the left-hand control is different depending on which mode you are in.

The following describes the left-hand control operation in each mode.

Radio Operation

Pushing the top of the switch will “Seek” up for the next listenable station and pushing the bottom of the switch will “Seek” down for the next listenable station.

The button located in the center of the left-hand control will tune to the next preset station that you have programmed in the radio preset button.

Media Mode

Pushing the top of the switch once goes to the next track on the selected media (AUX/USB/Bluetooth®). Pushing the bottom of the switch once goes to the beginning of the current track, or to the beginning of the previous track if it is within eight seconds after the current track begins to play.

AUX/USB/MP3 CONTROL

The Media Hub is located on the instrument panel, below the climate controls. Behind the media hub access door, the Media Hub contains one AUX port, a Type C USB Port and one standard USB Port. Both USB Ports allow you to play music from MP3 players/smartphones or USB devices through the vehicle's sound system.

Plugging in a smartphone device to a USB Port may activate Android Auto™ or Apple CarPlay® features, if equipped. For further information, refer to "Android Auto™" or "Apple CarPlay®" in "Media Mode" in "Uconnect 4 with 7-inch Display" section or in the Owner's Manual Supplement.

The Smart Charging USB ports provide power to your device up to an hour after the vehicle is turned off.

NOTE:

- Two devices can be plugged in at the same time and both ports will provide charging capabilities. Only one port can transfer data to the system at a time. A popup will appear and allow you to select the device transferring data.
- Both ports share a single data connection. The user cannot switch between Type A or Type C.

For example, if a device is plugged into the Type A USB port and another device is plugged into the Type C USB port, a message will appear and allow you to select which device to use.

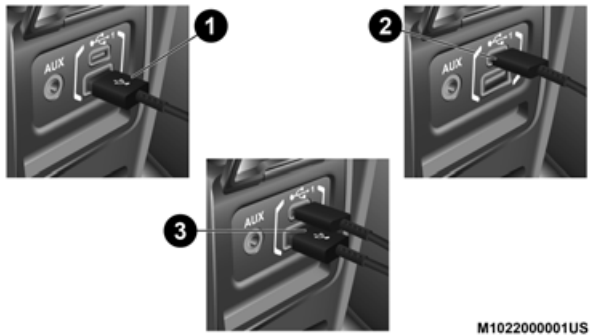

USB Connection

1 — Type A Plugged In
2 — Type C Plugged In
3 — Type A And Type C Plugged In

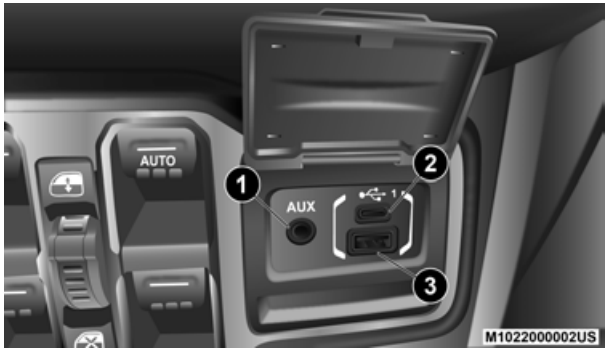

Media Hub

1 — AUX Port
2 — Type C USB Port
3 — Type A USB Port

Located inside the center console, a second USB Port allows you to play music from iPod®/MP3 players or USB devices through your vehicle's sound system.

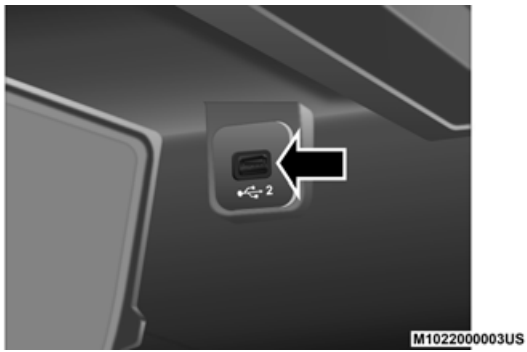

Center Console USB

A third and fourth USB port (if equipped) are located behind the center console, above the power inverter. One is a charge only port, and can only charge USB devices. The other USB Port allows you to play music from iPod®/MP3 players or USB devices through your vehicle's sound system.

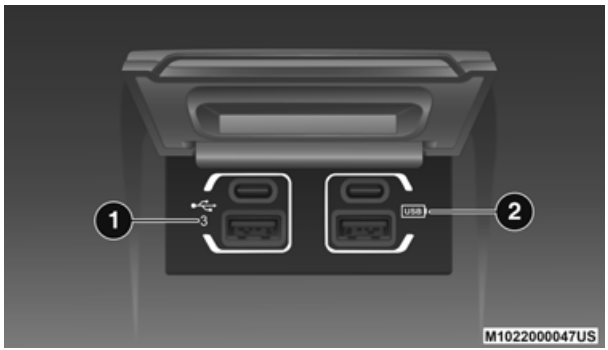

USB On The Back Of The Center Console

1 - Type C And Standard USB USB Ports
2 - Type C and Standard Charge Only USB Ports

When a new device or smartphone is plugged into the USB ports, the following message will display depending on the device being utilized:

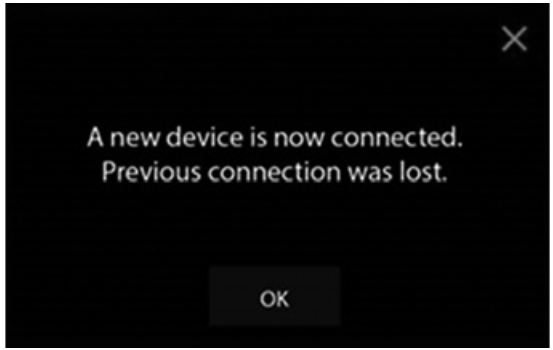

Device Plugged In Message Screen

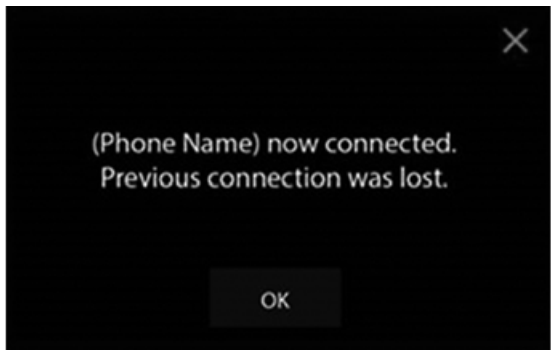

Phone Plugged In Message Screen

Phone Or USB Plugged In Message Screen

WARNING!
Do not plug in or remove the iPod® or external device while driving. Failure to follow this warning could result in a collision.

RADIO OPERATION AND MOBILE PHONES

Under certain conditions, the mobile phone being on in your vehicle can cause erratic or noisy performance from your radio. This condition may be lessened or eliminated by relocating the mobile phone antenna. This condition is not harmful to the radio. If your radio performance does not satisfactorily "clear" by the repositioning of the antenna, it is recommended that the radio volume be turned down or off during mobile phone operation when not using Uconnect (if equipped).

Regulatory And Safety Information

USA/CANADA

Exposure to Radio Frequency Radiation

The radiated output power of the internal wireless radio is far below the FCC and IC radio frequency exposure limits. Nevertheless, the wireless radio will be used in such a manner that the radio is 8 in (20 cm) or further from the human body.

The internal wireless radio operates within guidelines found in radio frequency safety standards and recommendations, which reflect the consensus of the scientific community.

The radio manufacturer believes the internal wireless radio is safe for use by consumers. The level of energy emitted is far less than the electromagnetic energy emitted by wireless devices such as mobile phones. However, the use of wireless radios may be restricted in some situations or environments, such as aboard airplanes. If you are unsure of restrictions,

you are encouraged to ask for authorization before turning on the wireless radio.

The following regulatory statement applies to all Radio Frequency (RF) devices equipped in this vehicle:

This device complies with Part 15 of the FCC Rules and with Innovation, Science and Economic Development Canada license-exempt RSS standard(s). Operation is subject to the following two conditions:

1. This device may not cause harmful interference.
2. This device must accept any interference received, including interference that may cause undesired operation.

Le présent appareil est conforme aux CNR d`Innovation, Science and Economic Development applicables aux appareils radio exempts de licence. L'exploitation est autorisée aux deux conditions suivantes:

1. l'appareil ne doit pas produire de brouillage, et
2. l'utilisateur de l'appareil doit accepter tout brouillage radioélectrique subi, même si le brouillage est susceptible d'en compromettre le fonctionnement.

La operación de este equipo está sujeta a las siguientes dos condiciones:

1. es posible que este equipo o dispositivo no cause interferencia perjudicial y
2. este equipo o dispositivo debe aceptar cualquier interferencia, incluyendo la que pueda causar su operación no deseada.

NOTE:
Changes or modifications not expressly approved by the party responsible for compliance could void the user's authority to operate the equipment.

NOTE:

- This equipment has been tested and found to comply with the limits for a Class B digital device, pursuant to Part 15 of the FCC Rules. These limits are designed to provide reasonable protection against harmful interference in a residential installation. This equipment generates, uses and can radiate radio frequency energy and, if not installed and used in accordance with the instructions, may cause harmful interference to radio communications. However, there is no guarantee that interference will not occur in a particular installation.

- If this equipment does cause harmful interference to radio or television reception, which can be determined by turning the equipment off and on, the user is encouraged to try to correct the interference by one or more of the following measures:
  1. Increase the separation between the equipment and receiver.
  2. Consult an authorized dealer or an experienced radio technician for help.

UCONNECT VOICE RECOGNITION QUICK TIPS

Introducing Uconnect

Start using Uconnect Voice Recognition with these helpful quick tips. It provides the key Voice Commands and tips you need to know to control your Uconnect 3, Uconnect 4, or Uconnect 4C/4C NAV system.

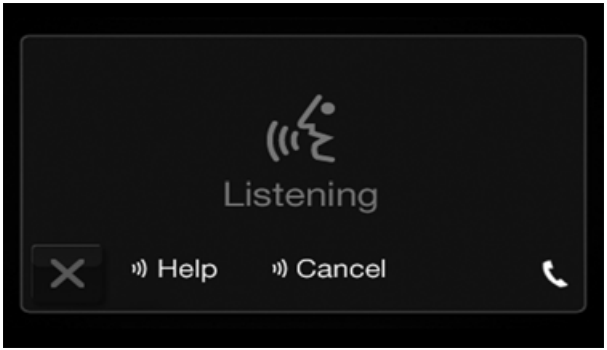

Uconnect 3

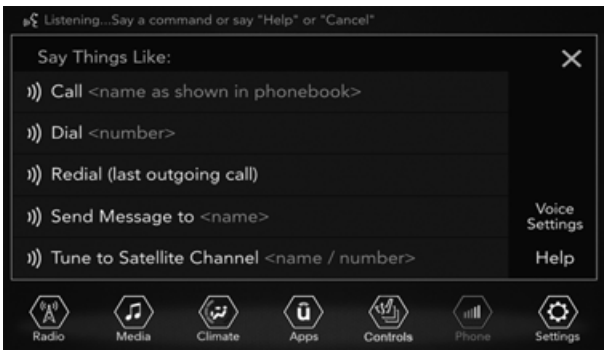

Uconnect 4

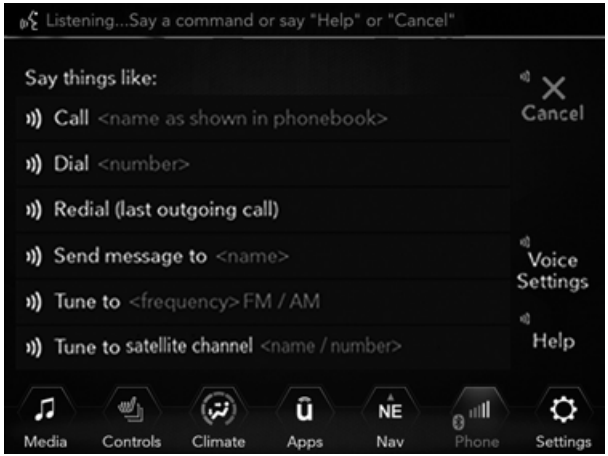

Uconnect 4C NAV

If you see the NAV icon on the bottom bar or in the Apps menus of your 8.4-inch touchscreen, you have the Uconnect 4C NAV system. If not, you have a Uconnect 4C with 8.4-inch display system.

Get Started

All you need to control your Uconnect system with your voice are the buttons on your steering wheel.

1. Visit UconnectPhone.com to check mobile device and feature compatibility and to find phone pairing instructions.
2. Reduce background noise. Wind noise and passenger conversations are examples of noise that may impact recognition.
3. Speak clearly at a normal pace and volume while facing straight ahead. The microphone is positioned in the middle console above the rearview mirror and aimed at the driver.
4. Each time you give a Voice Command, you must first push either the Voice Recognition (VR) or Phone button, wait until **after** the beep, then say your Voice Command.
5. You can interrupt the help message or system prompts by pushing the VR or Phone button and saying a Voice Command from current category.

Uconnect Voice Command Buttons — If Equipped

1 — Push To Initiate Or To Answer A Phone Call, Send Or Receive A Text

2 — For All Radios: Push To Begin Radio Or Media Functions. For 8.4-inch Displays Only: Push To Begin Navigation, Apps And Climate Functions.

3 — Push To End Call

Basic Voice Commands

The basic Voice Commands below can be given at any point while using your Uconnect system.

Push the VR button . After the beep, say:

- "**Cancel**" to stop a current voice session
- "**Help**" to hear a list of suggested Voice Commands
- "**Repeat**" to listen to the system prompts again

Notice the visual cues that inform you of your voice recognition system's status. Cues appear on the touchscreen for Uconnect 3 radio and above the main menu bar for Uconnect 4/4C Nav radios.

Radio

Use your voice to quickly get to the AM, FM or SiriusXM® Satellite Radio stations you would like to hear. (Subscription or included SiriusXM® Satellite Radio trial required).

Push the VR button. After the beep, say:

- "**Tune to** ninety-five-point-five FM"
- "**Tune to Satellite Channel** Hits 1"

TIP:
At any time, if you are not sure of what to say or want to learn a Voice Command, push the VR button and say "**Help**". The system provides you with a list of commands.

Uconnect 3 Radio

Uconnect 4 Radio

Uconnect 4C/4C NAV Radio

Media

Uconnect offers connections via USB, Bluetooth® and auxiliary ports (if equipped). Voice operation is only available for connected USB and iPod® devices. (Remote CD player optional and not available on all vehicles).

Push the VR button on the steering wheel. After the beep, say one of the following commands and follow the prompts to switch your media source or choose an artist/album/song/genre.

- "**Change source to** Bluetooth®"
- "**Change source to** iPod®"
- "**Change source to** USB"
- "**Play artist** Beethoven"; "**Play album** Greatest Hits"; "**Play song** Moonlight Sonata"; "**Play genre** Classical"

TIP:
Press the **Browse** button on the touchscreen to see all of the music on your iPod® or USB device. Your Voice Command must match **exactly** how the artist, album, song and genre information is displayed.

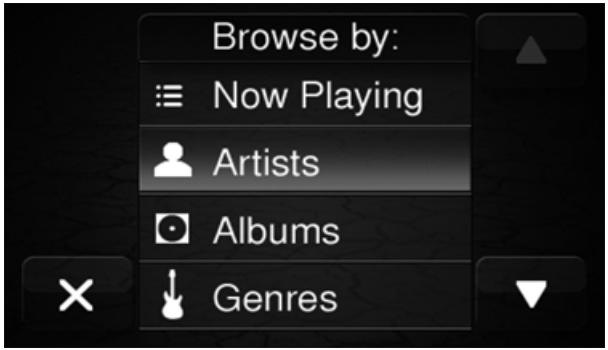

Uconnect 3 Media

Uconnect 4 Media

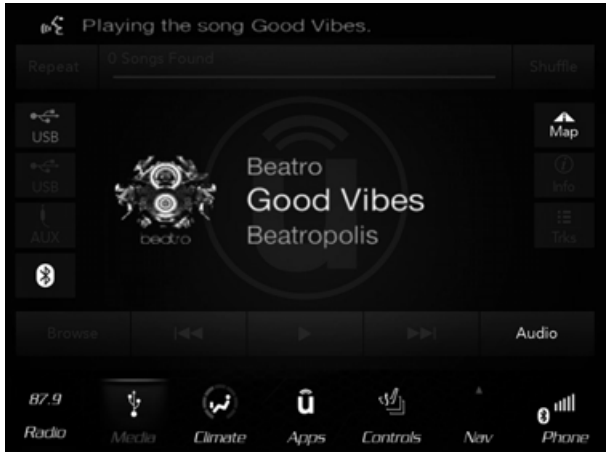

Uconnect 4C/4C NAV Media

Phone

Making and answering hands-free phone calls is easy with Uconnect. When the Phonebook button is illuminated on your touchscreen, your system is ready to make a phone call. You may have to wait for a few more moments to issue a Voice Command for hands-free calling. Check Uconnect-Phone.com for mobile phone compatibility and pairing instructions.

Push the VR button on the steering wheel or Phone button . After the beep, say one of the following commands:

- "**Call** John Smith"
- "**Dial** 123-456-7890 and follow the system prompts"
- "**Redial** (call **previous outgoing** phone number)"
- "**Call back** (call **previous incoming** phone number)"

TIP:
When providing a Voice Command, push the VR button on the steering wheel or Phone button and say "**Call**", then pronounce the name **exactly** as it appears in your phone book. When a contact has multiple phone numbers, you can say "**Call** John Smith **work/home/cell/etc.**"

Uconnect 3 Phone

Uconnect 4 Phone

Uconnect 4C/4C NAV Phone

Voice Text Reply

Uconnect announces **incoming** text messages. Push the VR button or Phone button (if enabled) and say "**Listen**". (Must have compatible mobile phone paired to Uconnect system).

1. Once an incoming text message is read to you, push the VR button or Phone button (if enabled). After the beep, say: "**Reply**".
2. Listen to the Uconnect prompts. After the beep, repeat one of the pre-defined messages and follow the system prompts.

PRE-DEFINED VOICE TEXT REPLY RESPONSES		
Yes.	Stuck in traffic.	See you later.
No.	Start without me.	I'll be late.
Okay.	Where are you?	I will be <number> minutes late.
Call me.	Are you there yet?	
I'll call you later.	I need directions.	See you in <number> minutes.
I'm on my way.	Can't talk right now.	
I'm lost.		Thanks.

TIP:
Your mobile phone must have the full implementation of the **Message Access Profile (MAP)** to take advantage of this feature. For details about MAP, visit UconnectPhone.com.

Apple® iPhone® iOS 6 or later supports reading **incoming** text messages only. To enable this feature on your Apple® iPhone®, follow these four simple steps:

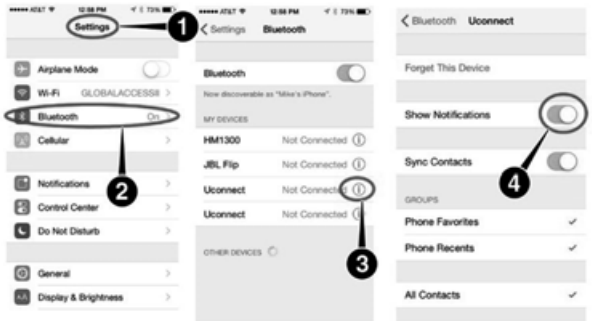

iPhone® Notification Settings

1 — Select Settings
2 — Select Bluetooth®
3 — Select The (i) For The Paired Vehicle
4 — Turn On Show Notifications

TIP:
Voice Text Reply is not compatible with iPhone®, but if your vehicle is equipped with Siri® Eyes Free, you can use your voice to send a text message.

Climate

Too hot? Too cold? Adjust vehicle temperatures hands-free and keep everyone comfortable while you keep moving ahead.

Push the VR button on the steering wheel. After the beep, say one of the following commands:

- "**Set driver temperature to** 70 **degrees**"
- "**Set passenger temperature to** 70 **degrees**"

TIP:
Voice Command for climate may only be used to adjust the interior temperature of your vehicle. Voice Command will not work to adjust the heated seats or steering wheel (if equipped).

Uconnect 4 With 7-inch Display Climate

Uconnect 4C/4C NAV With 8.4-Inch Display Climate

Navigation (4C NAV) — If Equipped

The Uconnect navigation feature helps you save time and become more productive when the system shows you exactly how to get to where you want to go.

1. To enter a destination, push the VR button on the steering wheel. After the beep, say: "**Find address** 800 Chrysler Drive Auburn Hills, Michigan" or enter State.
2. Then follow the system prompts.

TIP:
To start a Point of Interest (POI) search, push the VR button . After the beep, say: "**Find nearest** coffee shop".

Uconnect 4C NAV Navigation

SiriusXM Guardian™ (4C/4C NAV) — If Equipped

CAUTION!
Some SiriusXM Guardian™ services, including SOS Call and Roadside Assistance Call will NOT work without an operable LTE (voice/data) or 3G or 4G (data) network connection compatible with your device.

NOTE:
Your vehicle may be transmitting data as authorized by the subscriber.

An included trial and/or subscription is required to take advantage of the SiriusXM Guardian™ services in the next section of this guide. To register with SiriusXM Guardian™, press the Apps button on the Uconnect 4C/4C NAV touch-screen to get started.

NOTE:
SiriusXM Guardian™ is available only on properly equipped vehicles purchased within the continental United States, Alaska, Hawaii and Canada. Services can only be used where coverage is available; see coverage map for details.

SOS Call

Remote Door Lock/Unlock

Send & Go

Vehicle Finder

Stolen Vehicle Assistance

Remote Vehicle Start**

Remote Horn & Lights

Roadside Assistance Call

Vehicle Health Reports**

Vehicle Health Alert**

Performance Pages Plus**

**If vehicle is equipped.

Register (4C/4C NAV)

To unlock the full potential of SiriusXM Guardian™ in your vehicle, you must activate your SiriusXM Guardian™ services.

1. Press the Apps icon on the bottom of your in-vehicle touchscreen.
2. Select the Activate Services icon from your list of apps.

3. Select "Customer Care" to speak with a SiriusXM Guardian™ Customer Care agent who will activate services in your vehicle, or select "Enter Email" to activate on the web.

   - US residents visit: www.siriusxm.com/guardian.
   - Canadian residents visit: www.siriusxm.ca/guardian.

Vehicle Health Report/Alert (4C/4C NAV)

Your vehicle will send you a monthly email report, which summarizes the performance of your vehicle's key systems so you can stay on top of your vehicle's maintenance needs if you are registered for SiriusXM Guardian™. Your vehicle will also send you Vehicle Health Alerts when it detects issues with its key systems that need your attention. For further information, refer to your Uconnect Owner's Manual Supplement.

Mobile App (4C/4C NAV)

You're only a few steps away from a connected car experience.

Mobile App

To use the Uconnect Mobile App:

1. Once you have registered your SiriusXM Guardian™ services, download the Uconnect App to your mobile device. Use your Owner Account login and password to open the app.
2. Once on the "Remote" screen, you can begin using Remote Door Lock/Unlock, Remote Vehicle Start, and activate your horn and lights remotely, if equipped.
3. Press the Location button on the bottom menu bar of the app to bring up a map to locate your vehicle or send a location to your Uconnect Navigation using Vehicle Finder and Send & Go (if equipped).
4. Press the Settings side menu button (three horizontal lines) in the upper left corner of the app to bring up app settings.

NOTE:
For further information please visit DriveUconnect.com (US Residents) or DriveUconnect.ca (Canadian Residents).

SiriusXM® Travel Link (4C NAV)

Need to find a gas station, view local movie listings, check a sports score or the 5-day weather forecast? SiriusXM® Travel Link is a suite of services that brings a wealth of information right to your Uconnect 4C NAV system. (Not available for Uconnect 4 system.)

Push the VR button. After the beep, say one of the following commands:

- "**Show fuel prices**"
- "**Show 5-day weather forecast**"
- "**Show extended weather**"

TIP:
Traffic alerts are not accessible with Voice Command. Traffic alerts provide you with an alternate route to help you avoid construction or delays from reported traffic incidents. Use your touchscreen to accept or decline the recommended reroute.

SiriusXM Travel Link

Siri® Eyes Free

Available on iPhone® 4s and later

Siri lets you use your voice to send text messages, schedule meetings, select media, place phone calls and much more. Siri uses your natural language to understand what you mean and responds back to confirm your requests. The system is designed to keep your eyes on the road and your hands on the wheel by letting Siri help you perform useful tasks.

To begin, ensure Siri is enabled on your iPhone®. Pair your Siri-enabled device to your Uconnect System. Push and hold, then **release** the Uconnect Voice Recognition (VR) button on the steering wheel. After you hear a double beep you can ask Siri to play podcasts and music, get directions, read text messages, and many other useful requests.

Uconnect 4 Siri® Eyes Free Available

Uconnect 4C/4C NAV With 8.4-inch Siri Eyes® Free Available

Using Do Not Disturb

With Do Not Disturb, you can disable notifications from incoming calls and texts, allowing you to keep your eyes on the road and hands on the wheel. For your convenience, there is a counter display to keep track of your missed calls and text messages while you were using Do Not Disturb.

Do Not Disturb can automatically reply with a text message, a call, or both, when declining an incoming call and send it to voicemail.

Automatic reply messages can be:

- "I am driving right now, I will get back to you shortly".
- Create a custom auto reply message up to 160 characters.

While in Do Not Disturb, Conference Call can be selected so you can still place a second call without being interrupted by incoming calls.

NOTE:

- Only the beginning of your custom message will be seen on the touchscreen.
- Reply with text message is not compatible with iPhones®.
- Auto reply with text message is only available on phones that support Bluetooth® MAP.

Android Auto™ — If Equipped

NOTE:
Feature availability depends on your carrier and mobile phone manufacturer. Some Android Auto™ features may or may not be available in every region and/or language.

Android Auto™ allows you to use your voice to interact with Android's™ best-in-class speech technology through your vehicle's voice recognition system, and use your smartphone's data plan to project your Android™ powered smartphone and a number of its apps onto your Uconnect touchscreen. Connect your Android™ 5.0 (Lollipop), or higher, to one of the media USB ports, using the factory-provided USB cable, and press the new Android Auto™ icon that replaces your "Phone" icon on the main menu bar to begin Android Auto™. Push and hold the VR button on the steering wheel, or press and hold the Microphone icon within Android Auto™, to activate Android's™ VR, which recognizes natural voice commands, to use a list of your smartphone's features:

- Maps
- Music
- Phone
- Text Messages
- Additional Apps

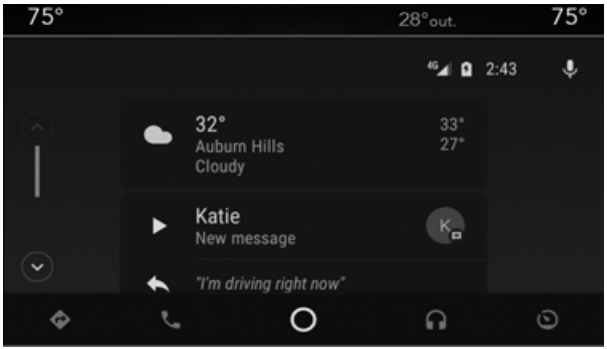

Android Auto™ On 7-inch Display

Android Auto™ On 8.4-inch Display

Refer to "Android Auto™" in "Media Mode" in the "Uconnect 4 with 7-inch Display" section or the Uconnect Owner's Manual Supplement for further information.

NOTE:
Requires compatible smartphone running Android™ 5.0 (Lollipop) or higher and download app on Google Play. Android™, Android Auto™, and Google Play are trademarks of Google Inc.

Apple CarPlay® — If Equipped

NOTE:
Feature availability depends on your carrier and mobile phone manufacturer. Some Apple CarPlay® features may or may not be available in every region and/or language.

Apple CarPlay® allows you to use your voice to interact with Siri through your vehicle's voice recognition system, and use your smartphone's data plan to project your iPhone® and a number of its apps onto your Uconnect touchscreen. Connect your iPhone® 5, or higher, to one of the media USB ports, using the factory-provided Lightning cable, and press the new Apple CarPlay® icon that replaces your Phone icon on the main menu bar to begin Apple

CarPlay®. Push and hold the VR button on the steering wheel, or press and hold the Home button within Apple CarPlay®, to activate Siri, which recognizes natural voice commands to use a list of your iPhone's® features:

- Phone
- Music
- Messages
- Maps
- Additional Apps

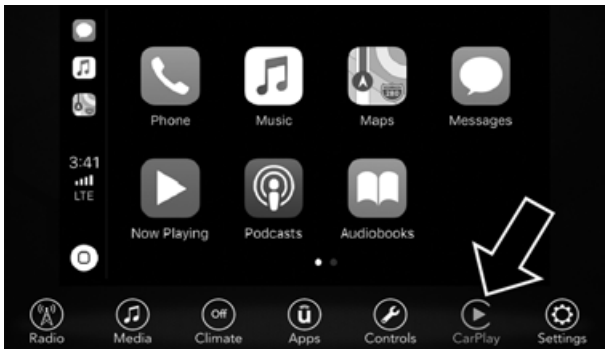

Apple CarPlay® On 7-inch Display

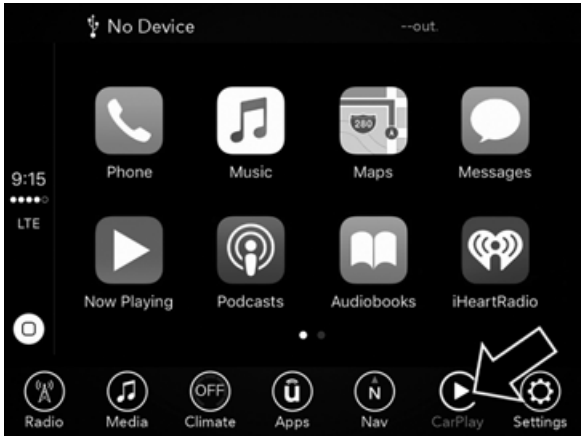

Apple CarPlay® On 8.4-inch Display

Refer to "Apple Carplay®" in "Media Mode" in "Uconnect 4 with 7-inch Display" section or in the Uconnect Owner's Manual Supplement for further information

NOTE:
Requires compatible iPhone®. See dealer for phone compatibility. Data plan rates apply. Vehicle user interface is a product of Apple®. Apple CarPlay® is a trademark of Apple® Inc. iPhone® is a trademark of Apple® Inc., registered in the US and other countries. Apple® terms of use and privacy statements apply.

General Information

The following regulatory statement applies to all Radio Frequency (RF) devices equipped in this vehicle:

This device complies with Part 15 of the FCC Rules and with Innovation, Science, and Economic Canada license-exempt RSS standard(s). Operation is subject to the following two conditions:

1. This device may not cause harmful interference.
2. This device must accept any interference received, including interference that may cause undesired operation.

Le présent appareil est conforme aux CNR d`Innovation, Science and Economic Development applicables aux appareils radio exempts de licence. L'exploitation est autorisée aux deux conditions suivantes:

1. l'appareil ne doit pas produire de brouillage, et
2. l'utilisateur de l'appareil doit accepter tout brouillage radioélectrique subi, même si le brouillage est susceptible d'en compromettre le fonctionnement.

La operación de este equipo está sujeta a las siguientes dos condiciones:

1. es posible que este equipo o dispositivo no cause interferencia perjudicial y
2. este equipo o dispositivo debe aceptar cualquier interferencia, incluyendo la que pueda causar su operación no deseada.

NOTE:
Changes or modifications not expressly approved by the party responsible for compliance could void the user's authority to operate the equipment.

Additional Information

© 2019 FCA US LLC. All rights reserved. Mopar and Uconnect are registered trademarks and Mopar Owner Connect is a trademark of FCA US LLC. Android™ is a trademark of Google Inc. SiriusXM® and all related marks and logos are trademarks of SiriusXM® Radio Inc.

Uconnect System Support:

- US residents visit www.DriveUconnect.com or call: 1-877-855-8400 (24 hours a day 7 days a week)
- Canadian residents visit www.DriveUconnect.ca or call: 1-800-465-2001 (English) or 1-800-387-9983 (French)

SiriusXM Guardian™ services support:

- US residents visit www.siriusxm.com/guardian or call: 1-844-796-4827
- Canadian residents visit www.siriusxm.ca/guardian or call: 1-877-324-9091

CUSTOMER ASSISTANCE

SUGGESTIONS FOR OBTAINING SERVICE FOR YOUR VEHICLE

Prepare For The Appointment

All work to be performed may not be covered by the warranty. Discuss additional charges with the service manager. Keep a maintenance log of your vehicle's service history. This can often provide a clue to the current problem.

Prepare A List

Make a written list of your vehicle's problems or the specific work you want done. If you've had an accident or work done that is not on your maintenance log, let the service advisor know.

Be Reasonable With Requests

If you list a number of items and you must have your vehicle by the end of the day, discuss the situation with the service advisor and list the items in order of priority. At many authorized dealers, you may obtain a rental vehicle at a minimal daily charge. If you need a rental, it is advisable to make these arrangements when you call for an appointment.

IF YOU NEED ASSISTANCE

The manufacturer and its authorized dealer are vitally interested in your satisfaction. We want you to be happy with our products and services.

Warranty service must be done by an authorized dealer. We strongly recommend that you take the vehicle to an authorized dealer. They know your vehicle the best, and are most concerned that you get prompt and high quality service. The manufacturer's authorized dealer have the facilities, factory-trained technicians, special tools, and the latest information to ensure the vehicle is fixed correctly and in a timely manner.

This is why you should always talk to an authorized dealer service manager first. Most matters can be resolved with this process.

- If for some reason you are still not satisfied, talk to the general manager or owner of the authorized dealer. They want to know if you need assistance.
- If an authorized dealer is unable to resolve the concern, you may contact the manufacturer's customer center.

Any communication to the manufacturer's customer center should include the following information:

- Owner's name and address
- Owner's telephone number (home, mobile, and office)
- Authorized dealer name
- Vehicle Identification Number (VIN)
- Vehicle delivery date and mileage

FCA US LLC Customer Center

P.O. Box 21–8004

Auburn Hills, MI 48321–8004

Phone: (877) 426-5337

FCA Canada Inc. Customer Center

P.O. Box 1621

Windsor, Ontario N9A 4H6

Phone: (800) 465-2001 English / (800) 387-9983 French

In Mexico Contact

Av. Prolongacion Paseo de la Reforma, 1240

Sante Fe C.P. 05109

Mexico, D. F.

In Mexico City: 800-505-1300

Outside Mexico City: +(52) 55 50817568

Puerto Rico And U.S. Virgin Islands

FCA Caribbean LLC

P.O. Box 191857

San Juan 00919-1857

Phone: (877) 426-5337

Fax: (787) 782-3345

Customer Assistance For The Hearing Or Speech Impaired (TDD/TTY)

To assist customers who have hearing difficulties, the manufacturer has installed special TDD (Telecommunication Devices for the Deaf) equipment at its customer center. Any hearing or speech impaired customer, who has access to a TDD or a conventional teletypewriter (TTY) in the United States, can communicate with the manufacturer by dialing 1-800-380-CHRY.

Canadian residents with hearing difficulties that require assistance can use the special needs relay service offered by Bell Canada. For TTY teletypewriter users, dial 711 and for Voice callers, dial 1-800-855-0511 to connect with a Bell Relay Service operator.

Service Contract

You may have purchased a service contract for a vehicle to help protect you from the high cost of unexpected repairs after the manufacturer's New Vehicle Limited Warranty expires. The manufacturer stands behind only the manufacturer's service contracts. If you purchased a manufacturer's service contract, you will receive Plan Provisions and an Owner Identification Card in the mail within three weeks of the vehicle delivery date. If you have any questions about the service contract, call the manufacturer's Service Contract National Customer Hotline at 1-800-521-9922 (Canadian residents, call (800) 465-2001 English / (800) 387-9983 French).

The manufacturer will not stand behind any service contract that is not the manufacturer's service contract. It is not responsible for any service contract other than the manufacturer's service contract. If you purchased a service contract that is not a manufacturer's service contract, and you require service after the manufacturer's New Vehicle Limited Warranty expires, please refer to the contract documents, and contact the person listed in those documents.

We appreciate that you have made a major investment when you purchased the vehicle. An authorized dealer has also made a major investment in facilities, tools, and training to assure that you are absolutely delighted with the ownership experience. You will be pleased with their sincere efforts to resolve any warranty issues or related concerns.

WARNING!
Engine exhaust (internal combustion engines only), some of its constituents, and certain vehicle components contain, or emit, chemicals known to the State of California to cause cancer and birth defects, or other reproductive harm. In addition, certain fluids contained in vehicles and certain products of component wear contain, or emit, chemicals known to the State of California to cause cancer and birth defects, or other reproductive harm.

WARRANTY INFORMATION

See the Warranty Information for the terms and provisions of FCA US LLC warranties applicable to this vehicle and market. Refer to https://www.mopar.com/en-us.html for further information.

MOPAR PARTS

Mopar fluids, lubricants, parts, and accessories are available from an authorized dealer. They are recommended for your vehicle in order to help keep the vehicle operating at its best.

Mopar has a wide range of accessories to fit your active lifestyle. These Accessories were designed by the same engineers that created your vehicle, to make it truly yours. From winches to axles, from suspension to the LED off–road lights, these parts have been crafted to meet the needs of enthusiasts like you who demand the very best in capability and style.

REPORTING SAFETY DEFECTS

In The 50 United States And Washington, D.C.

If you believe that your vehicle has a defect that could cause a crash or cause injury or death, you should immediately inform the National Highway Traffic Safety Administration (NHTSA) in addition to notifying FCA US LLC.

If NHTSA receives similar complaints, it may open an investigation, and if it finds that a safety defect exists in a group of vehicles, it may order a recall and remedy campaign. However, NHTSA cannot become involved in individual problems between you, an authorized dealer or FCA US LLC.

To contact NHTSA, you may call the Vehicle Safety Hotline toll free at 1-888-327-4236 (TTY: 1-800-424-9153); or go to http://www.safercar.gov; or write to: Administrator, NHTSA, 1200 New Jersey Avenue, SE., West Building, Washington, D.C. 20590. You can also obtain other information about motor vehicle safety from http://www.safercar.gov.

In Canada

If you believe that your vehicle has a safety defect, you should contact the Customer Service Department immediately. Canadian customers who wish to report a safety defect to the Canadian government should contact Transport Canada, Motor Vehicle Defect Investigations and Recalls at 1-800-333-0510 or go to http://www.tc.gc.ca/eng/motorvehiclesafety/menu.htm.

PUBLICATION ORDER FORMS

To order the following manuals, you may use either the website or the phone numbers listed below.

Service Manuals

These comprehensive Service Manuals provide the information that students and professional technicians need in diagnosing/troubleshooting, problem solving, maintaining, servicing, and repairing FCA US LLC vehicles. A complete working knowledge of the vehicle, system, and/or components is written in straightforward language with illustrations, diagrams, and charts.

Diagnostic Procedure Manuals

Diagnostic Procedure Manuals are filled with diagrams, charts and detailed illustrations. These practical manuals make it easy for students and technicians to find and fix problems on computer-controlled vehicle systems and features. They show exactly how to find and correct problems the first time, using step-by-step troubleshooting and drivability procedures, proven diagnostic tests and a complete list of all tools and equipment.

Owner's Manuals

These Owner's Manuals have been prepared with the assistance of service and engineering specialists to acquaint you with specific FCA US LLC vehicles. Included are starting, operating, emergency and maintenance procedures as well as specifications, capabilities and safety tips.

Call toll free at:

- **1-800-890-4038 (U.S.)**
- **1-800-387-1143 (Canada)**

Or

Visit us on the Worldwide Web at:

- www.techauthority.com

INDEX

A

About Your Brakes 501
Adaptive Cruise Control (ACC) (Cruise Control) 321
Adding Engine Coolant (Antifreeze) 459
Adding Fuel 360
Additives, Fuel 503
Air Bag
  Air Bag Operation 244
  Air Bag Warning Light 240, 244
  Enhanced Accident Response 257, 435
  Event Data Recorder (EDR) 435
  Front Air Bag 242, 244
  If Deployment Occurs 256
  Knee Impact Bolsters 253
  Maintaining Your Air Bag System 259
  Maintenance 259
  Redundant Air Bag Warning Light 241
  Transporting Pets 276
Air Bag Light 240, 278
Air Cleaner, Engine (Engine Air Cleaner Filter) 446
Air Conditioner Maintenance 449
Air Conditioner Refrigerant 449, 450
Air Conditioner System 449
Air Conditioning 82
Air Conditioning Filter 84, 451
Air Conditioning System 83
Air Conditioning, Operating Tips 83
Air Filter 446
Air Pressure
  Tires 477
Alarm
  Arm The System 32
  Disarm The System 33
  Security Alarm 32
Alterations/Modifications
  Vehicle 15
Android Auto 641
Antifreeze (Engine Coolant) 458, 507
  Disposal 460
Anti-Lock Brake System (ABS) 195
Apple CarPlay 642
Assist, Hill Start 202
Audio Settings 582
Audio Systems (Radio) 510
Auto Down Power Windows 86
Automatic Dimming Mirror 61
Automatic Door Locks 40
Automatic Headlights 65

Automatic Temperature Control (ATC) 83
Automatic Transmission 294
Adding Fluid 466
Autostick 300
Fluid And Filter Change 466
Fluid Change 466
Fluid Level Check 465, 466
Fluid Type 465, 509
Gear Ranges 296
Special Additives 465
Automatic Transmission Limp Home Mode 299
Aux Mode 588
Auxiliary Electrical Outlet (Power Outlet) 149
Auxiliary Power Outlet 149
Auxiliary Switches 152
Axle Fluid 509
Axle Lock 305

B

Battery 442
Keyless Key Fob Replacement 20
Belts, Seat 277
Blind Spot Monitoring 208
Bluetooth
Connect Or Disconnect Link Between the Uconnect Phone And Mobile Phone 613
Connecting To A Particular Mobile Phone Or Audio Device After Pairing 606
Bluetooth Mode 589
Body Mechanism Lubrication 453
B-Pillar Location 472
Brake Assist System 197
Brake Control System 196
Brake Fluid 462, 509
Brake System 462, 501
Anti-Lock (ABS) 501
Fluid Check 462
Master Cylinder 462
Parking 287
Brake/Transmission Interlock 294
Bulb Replacement 394, 396
Bulbs, Light 280, 394
Bumper End Cap Removal 378

C

Camera, Rear 356
Capacities, Fluid 507
Caps, Filler
Fuel 360
Oil (Engine) 441
Radiator (Coolant Pressure) 460
Car Washes 492
Carbon Monoxide Warning 277, 506

Carpeting....495
Cellular Phone....623
Center High Mounted Stop Light....399
Certification Label....362
Chains, Tire....486
Changing A Flat Tire....466
Chart, Tire Sizing....468
Checking Your Vehicle For Safety....276
Checks, Safety....276
Child Restraint....260
Child Restraints
  Booster Seats....264
  Child Seat Installation....274
  How To Stow An unused ALR Seat Belt....271
  Infant And Child Restraints....262
  Locating The LATCH Anchorages....269
  Lower Anchors And Tethers For Children....266
  Older Children And Child Restraints....263
  Seating Positions....265
Clean Air Gasoline....503
Cleaning
  Wheels....485
Climate Control
  Automatic....76
Cold Weather Operation....285
Compact Spare Tire....484
Connector
  UCI....620
  Universal Consumer Interface (UCI)....620
Console....143
  Floor....143
Contract, Service....648
Cooling Pressure Cap (Radiator Cap)....460
Cooling System....457
  Adding Coolant (Antifreeze)....459
  Coolant Level....461
  Cooling Capacity....507
  Disposal Of Used Coolant....460
  Drain, Flush, And Refill....458
  Inspection....458, 461
  Points To Remember....461
  Pressure Cap....460
  Radiator Cap....460
  Selection Of Coolant (Antifreeze)....458, 507
Corrosion Protection....491
Cruise Control (Speed Control)....321
Customer Assistance....646
Cybersecurity....510

D

Daytime Running Lights....64
Dealer Service....444
Defroster, Windshield....278

Delay (Intermittent) Wipers 70
Dimmer Switch
Headlight....65
Dipsticks
Oil (Engine)....442
Disable Vehicle Towing 432
Disposal
Antifreeze (Engine Coolant)....460
Disturb....611
Do Not Disturb....640
Door Frame 106
Installation....106
Removal....106
Door Locks
Automatic....40
Doors....33
Removal....41, 45
Removal, Front 41
Removal, Rear....45
Driver's Seat Back Tilt 49, 50
Driving....376
Dual Top....87

E

Electric Brake Control System....196
Anti-Lock Brake System....195
Electronic Roll Mitigation 198, 207
Electric Remote Mirrors 63
Electrical Outlet, Auxiliary (Power Outlet)....149
Electrical Power Outlets....149
Electronic Speed Control (Cruise Control)....318
Electronic Stability Control (ESC)....198
Emergency
In Case Of 388
SOS Emergency Call 388
Emergency Brake 287
Emergency, In Case Of
Jacking....409, 466
Jump Starting 423
Tow Hooks 434
Engine 441
Air Cleaner 446
Block Heater....286
Break-In Recommendations....287
Compartment....441
Compartment Identification 441
Coolant (Antifreeze)....507
Cooling....457
Exhaust Gas Caution....277, 506
Fails To Start....285
Flooded, Starting 285
Fuel Requirements 507
Jump Starting 423

Oil 444, 507
Oil Filler Cap 441
Oil Filter 446
Oil Selection 444, 507
Oil Synthetic 445
Overheating 428
Starting 281, 282
Engine Oil Viscosity 445
Engine Oil Viscosity Chart 445
Enhanced Accident Response Feature 257, 435
Ethanol 504
Exhaust Gas Caution 277
Exhaust Gas Cautions 506
Exhaust System 277, 456
Exterior Lights 64, 280

F

Fabric Care 493
Fabric Top 493
Filters
Air Cleaner 446
Air Conditioning 84, 451
Engine Oil 446, 507
Engine Oil Disposal 445
Flashers
Hazard Warning 388
Turn Signal 280
Turn Signals 397, 398
Flash-To-Pass 65
Flooded Engine Starting 285
Fluid Capacities 507
Fluid Leaks 280
Fluid Level
Manual Transmission 464
Fluid Level Checks 463
Brake 462
Engine Oil 442
Fluid, Brake 509
Fluids And Lubricants 507
Fog Lights 397
Fog Lights, Service 397
Fold-Flat Seats 49
Folding Rear Seats 52
Folding Windshield 125
Forward Collision Warning 215
Four Wheel Drive 302
Operation 302
Shifting 302
System 302
Four-Way Hazard Flasher 388
Freedom Panels 98, 99
Freeing A Stuck Vehicle 430
Front Axle (Differential) 463

Fuel....503
Adding....360
Additives....503
Clean Air....503
Ethanol....504
Filler Cap (Gas Cap)....360
Gasoline....503
Materials Added....503
Methanol....504
Octane Rating....503, 507
Requirements....507
Specifications....507
Tank Capacity....507
Fueling....360
Fuses....399

G

Garage Door Opener (HomeLink)....135
Gas Cap (Fuel Filler Cap)....360, 361
Gasoline, (Fuel)....503
Gasoline, Clean Air....503
Gasoline, Reformulated....503
Gear Ranges....291, 296
Glass Cleaning....499
Gross Vehicle Weight Rating....364
GVWR....362

H

Hard Top....98
Hazard Warning Flashers....388
Head Restraints....56
Headlights
Automatic....65
Bulb Replacement....396
Cleaning....491
High Beam/Low Beam Select Switch....65
Lights On Reminder....67
Passing....65
Replacing....396
Heated Mirrors....63
Heated Steering Wheel....60
High Beam/Low Beam Select (Dimmer) Switch....65
Hill Start Assist....202
Hitches
Trailer Towing....366
HomeLink (Garage Door Opener)....135
Hood Prop....130
Hood Release....130

I

Ignition....23
Switch....23
In Case Of Emergency....388

In Vehicle Help
Vehicle User Guide 16
Inside Rearview Mirror 61
Instrument Panel Lens Cleaning 499
Integrated Power Module (Fuses) 400
Interior And Instrument Lights 68
Interior Appearance Care 495
Interior Lights 68
Intermittent Wipers (Delay Wipers) 70
Introduction 13
Inverter
Power 150
iPod/USB/MP3 Control 587

J

Jack Location 409
Jack Operation 416, 466
Jacking Instructions 416
Jump Starting 423

K

Key Fob
Arm The System 32
Disarm The System 33
Programming Additional Key Fobs 21
Key Fob Battery Service (Remote Keyless Entry) 20
Key Fob Programming (Remote Keyless Entry) 21
Key-In Reminder 24
Keyless Enter-N-Go 36
Passive Entry 36
Keys 18
Replacement 21, 31

L

Lane Change Assist 67
Lap/Shoulder Belts 231
Latches 280
Hood 130
Leaks, Fluid 280
Life Of Tires 480
Light Bulbs 280, 394
Lights 280
Air Bag 240, 278
Automatic Headlights 65
Brake Assist Warning 202
Bulb Replacement 396
Center Mounted Stop 399
Daytime Running 64
Dimmer Switch, Headlight 65
Exterior 64, 280
Fog 397
Hazard Warning Flasher 388
Headlights 396
High Beam 65
High Beam/Low Beam Select 65

Interior 68
Lights On Reminder 67
Passing 65
Rear Servicing 398
Rear Tail Lamps 398
Service 396
Side Marker 398
Tire Pressure Monitoring (TPMS) 219
Traction Control 202
Turn Signal 280
Turn Signals 397, 398
Loading Vehicle 362
Tires 472
Locking
Axle 305
Locks
Automatic Door 40
Child Protection 40
Power Door 35
Low Tire Pressure System 219
Lubrication, Body 453
Lug Nuts/Bolts 501
Luggage Carrier 162

M

Maintenance Free Battery 442
Maintenance Schedule 436
Manual
Park Release 429
Service 650
Manual Transmission 289, 464
Fluid Level Check 464
Lubricant Selection 464, 509
Shift Speeds 291
Methanol 504
Mirrors 61
Automatic Dimming 61
Electric Powered 63
Electric Remote 63
Heated 63
Outside 62
Rearview 61
Vanity 64
Modifications/Alterations
Vehicle 15
Monitor, Tire Pressure System 219
Mopar Parts 649

N

New Vehicle Break-In Period 287

O

Occupant Restraints 228
Octane Rating, Gasoline (Fuel) 503, 507
Oil Filter, Change 446

Oil Filter, Selection....446
Oil, Engine....444, 507
Capacity....507
Change Interval....444
Dipstick....442
Disposal....445
Filter....446, 507
Filter Disposal....445
Identification Logo....445
Materials Added To....445
Recommendation....444, 507
Synthetic....445
Viscosity....445, 507
Operator Manual
Owner's Manual....14, 650
Outside Rearview Mirrors....62
Overheating, Engine....428

P

Paint Care....491
Parking Brake....287
ParkSense System, Rear....342
Passive Entry....36
Pets....276
Placard, Tire And Loading Information....472
Power
Brakes....501
Door Locks....35
Inverter....150
Mirrors....63
Steering....309
Windows....85
Power Steering Fluid....509
Pregnant Women And Seat Belts....236
Pretensioners
Seat Belts....237

R

Radial Ply Tires....478
Radiator Cap (Coolant Pressure Cap)....460
Radio
Presets....576
Radio Operation....574, 623
Rear Axle (Differential)....463
Rear Camera....356
Rear Cross Path....213
Rear ParkSense System....342
Recreational Towing....373
Shifting Into Transfer Case Neutral (N)....374
Shifting Out Of Transfer Case Neutral (N)....375
Reformulated Gasoline....503
Refrigerant....450
Release, Hood....130
Reminder, Seat Belt....229

Remote Control
Starting System....26
Remote Keyless Entry
Arm The Alarm....32
Disarm The Alarm....33
Programming Additional Key Fobs....21
Remote Sound System (Radio) Control....619
Remote Starting
Exit Remote Start Mode....28
Uconnect Customer Programmable Features....29
Uconnect Settings....29
Remote Starting System....26
Removable Doors....41, 45
Front....41
Rear....45
Removing....87
Replacement Bulbs....394
Replacement Keys....21, 31
Replacement Tires....481
Reporting Safety Defects....649
Restraints, Child....260
Restraints, Head....56
Roll Over Warning....14
Roof Type Carrier....162
Rotation, Tires....487

S

Safety Checks Inside Vehicle....277
Safety Checks Outside Vehicle....280
Safety Defects, Reporting....649
Safety Information, Tire....466
Safety Tips....276
Safety, Exhaust Gas....277
Schedule, Maintenance....436
Seat Belts....229, 277
Adjustable Shoulder Belt....235
Adjustable Upper Shoulder Anchorage....235
Adjustable Upper Shoulder Belt Anchorage....235
Automatic Locking Retractor (ALR)....237
Child Restraints....260
Energy Management Feature....237
Extender....236
Front Seat....229, 231, 233
Inspection....277
Lap/Shoulder Belt Operation....233
Lap/Shoulder Belt Untwisting....234
Lap/Shoulder Belts....231
Operating Instructions....233
Pregnant Women....236
Pretensioners....237
Rear Seat....231

Reminder 229
Seat Belt Extender 236
Seat Belt Pretensioner 237
Untwisting Procedure 234
Seat Belts Maintenance 498
Seats 49
Adjustment 49
Height Adjustment 50
Rear Folding 49
Tilting 49
Security Alarm 32
Arm The System 32
Disarm The System 33
Selection Of Coolant (Antifreeze) 507
Sentry Key (Immobilizer) 30
Sentry Key Replacement 21, 31
Service Assistance 646
Service Contract 648
Service Manuals 650
Shifting 293
Automatic Transmission 293, 294
Manual Transmission 289
Transfer Case, Shifting Into Transfer Case Neutral (N) 374
Transfer Case, Shifting Out Of Transfer Case Neutral (N) 375
Shoulder Belts 231
Side Step Removal 377
Signals, Turn 280, 397, 398
Siri 639
Sirius Satellite Radio 577
Favorites 580
Replay 579
SiriusXM Guardian
Vehicle Health Alert 637
SiriusXM Satellite Radio
Browse in SXM 580
Favorites 580
Replay 579
Snow Chains (Tire Chains) 486
Snow Tires 483
Soft Top 87, 117
Soft Top Windows 117
Spare Tires 412, 483, 484, 485
Spark Plugs 507
Specifications
Fuel (Gasoline) 507
Oil 507

Speed Control
Accel/Decel....320
Accel/Decel (ACC Only)....327
Cancel....321
Resume....321
Speed Control (Cruise Control)....318, 321
Starting....281, 282
Automatic Transmission....281
Button....23
Cold Weather....285
Engine Block Heater....286
Engine Fails To Start....285
Manual Transmission....281
Remote....26
Starting And Operating....282
Starting Procedures....282
Steering....59
Power....309
Tilt Column....59
Wheel, Heated....60
Wheel, Tilt....59
Steering Wheel Audio Controls....619
Steering Wheel Mounted Sound System Controls....619
Stop/Start....310, 314
Storage....117, 142
Storage, Vehicle....84, 489
Store Radio Presets....576
Storing Your Vehicle....489
Stuck, Freeing....430
Sway Bar Disconnect
Electronic....306
Sway Control, Trailer....207
Synthetic Engine Oil....445
System, Remote Starting....26

T

Tailgate....131
Telescoping Steering Column....59
Temperature Control, Automatic (ATC)....83
Tilt Steering Column....59
Tire And Loading Information Placard....472
Tire Markings....467
Tire Safety Information....466
Tires....280, 476, 483, 488
Aging (Life Of Tires)....480
Air Pressure....476
Chains....486
Changing....409, 466
Compact Spare....484
General Information....476, 483
High Speed....478
Inflation Pressure....477
Jacking....466

Life Of Tires 480
Load Capacity 472, 473
Pressure Monitoring System (TPMS) 219
Quality Grading 488
Radial 478
Replacement 481
Rotation 487
Safety 466, 476
Sizes 468
Snow Tires 483
Spare Tires 412, 483, 484, 485
Spinning 479
Tread Wear Indicators 480
Wheel Nut Torque 501
To Open Hood 130
Tongue Weight/Trailer Weight 369
Top
Dual 87
Freedom 98
Hard 98
Soft 110
Tow Hooks
Emergency 434
Towing 363, 366, 432
Disabled Vehicle 432
Recreational 373
Weight 366
Towing Behind A Motorhome 373
Trac-Lok
Rear Axle 305
Traction Control 207
Trailer Sway Control (TSC) 207
Trailer Towing 363
Cooling System Tips 372
Hitches 366
Trailer And Tongue Weight 366, 369
Wiring 370
Trailer Towing Guide 366
Trailer Weight 366
Transfer Case 464
Fluid 509
Four-Wheel-Drive-Operation 302
Maintenance 464
Transmission 294
Automatic 294, 465
Fluid 509
Maintenance 465
Manual 289
Shifting 293
Transporting Pets 276
Tread Wear Indicators 480
Turn Signals 397, 398

U

UCI Connector....620
Uconnect
Advanced Phone Connectivity....613
Phone Call Features....609
Things You Should Know About Your Uconnect Phone....613
Uconnect Settings....29
Uconnect Phone....602, 603, 605, 606, 607
Answer Or Ignore An Incoming Call — Call Currently In Progress....611
Answer Or Ignore An Incoming Call — No Call Currently In Progress....611
Bluetooth Communication Link....615
Call By Saying A Phonebook Name....609
Call Continuation....572, 612, 613
Call Controls....609
Call Termination....612
Cancel Command....603
Connect Or Disconnect Link Between The Uconnect Phone And Mobile Phone....613
Connecting To A Particular Mobile Phone Or Audio Device After Pairing....606
Deleting A Phone Or Audio Device....607
Dial By Saying A Number....609
Disconnecting A Phone Or Audio Device....607
Far End Audio Performance....614
Help Command....603
Join Calls....612
Making A Phone Or Audio Device A Favorite....607
Making A Second Call While Current Call Is In Progress....612
Managing Your Favorites....608
Natural Speech....602
Operation....602
Pair (Link) Uconnect Phone To A Mobile Phone....603
Pair A Bluetooth Streaming Audio Device....606
Pair Additional Mobile Phones....605
Phonebook Download....607
Place/Retrieve A Call From Hold....612
Power-Up....615
Recent Calls....610
Redial....612
To Remove A Favorite....608
Toggling Between Calls....612
Touch-Tone Number Entry....610
Transfer Call To And From Mobile Phone....613
Voice Command....613
Ways To Initiate A Phone Call....609

Uconnect Settings
Customer Programmable Features....29, 36
Passive Entry Programming....36
Uniform Tire Quality Grades....488
Universal Consumer Interface (UCI) Connector....620
Untwisting Procedure, Seat Belt....234

V

Vanity Mirrors....64
Vehicle Identification Number (VIN)....500
Vehicle Loading....362, 473
Vehicle Modifications/Alterations....15
Vehicle Storage....84, 489
Vehicle User Guide
In Vehicle Help....16
Navigation....16
Operating Instructions....16
Searching User Guide....16
Viscosity, Engine Oil....445
Voice Command....625
Voice Recognition System (VR)....625

W

Warnings And Cautions....15
Warnings, Roll Over....14
Warranty Information....649
Washers, Windshield....442
Washing Vehicle....492
Wheel And Wheel Tire Care....485
Wheel And Wheel Tire Trim....485
Wind Buffeting....86
Window Fogging....84
Window Storage....117
Windows....85
Power....85
Windshield
Folding....125
Windshield Defroster....278
Windshield Washers....69, 442
Fluid....442
Windshield Wiper Blades....453
Windshield Wipers....69
Wipers Blade Replacement....453

INSTALLATION OF RADIO TRANSMITTING EQUIPMENT

Special design considerations are incorporated into this vehicle's electronic system to provide immunity to radio frequency signals. Mobile two-way radios and telephone equipment must be installed properly by trained personnel. The following must be observed during installation.

The positive power connection should be made directly to the battery and fused as close to the battery as possible. The negative power connection should be made to body sheet metal adjacent to the negative battery connection. This connection should not be fused.

Antennas for two-way radios should be mounted on the roof or the rear area of the vehicle. Care should be used in mounting antennas with magnet bases. Magnets may affect the accuracy or operation of the compass on vehicles so equipped.

The antenna cable should be as short as practical and routed away from the vehicle wiring when possible. Use only fully shielded coaxial cable.

Carefully match the antenna and cable to the radio to ensure a low Standing Wave Ratio (SWR).

Mobile radio equipment with output power greater than normal may require special precautions.

All installations should be checked for possible interference between the communications equipment and the vehicle's electronic systems.

⚠WARNING:

Operating, servicing and maintaining a passenger vehicle or off-road highway motor vehicle can expose you to chemicals including engine exhaust, carbon monoxide, phthalates, and lead, which are known to the State of California to cause cancer and birth defects or other reproductive harm. To minimize exposure, avoid breathing exhaust, do not idle the engine except as necessary, service your vehicle in a well-ventilated area and wear gloves or wash your hands frequently when servicing your vehicle. For more information go to www.P65Warnings.ca.gov/passenger-vehicle .

©2019 FCA US LLC. All Rights Reserved. Jeep is a registered trademark of FCA US LLC.
©2019 FCA US LLC. Tous droits réservés. Jeep est une marque déposée de FCA US LLC.
App Store is a registered trademark of Apple Inc. Google Play Store is a registered trademark of Google.

20_JT_OM_EN_USC
All-New Gladiator
First Edition V3
Owner's Manual