OWNER'S MANUAL

MINI COOPER
MINI COOPER S

Contents
A-Z

Online Edition for Part-No. 01 41 0 157 644 - © 09/03 BMW AG

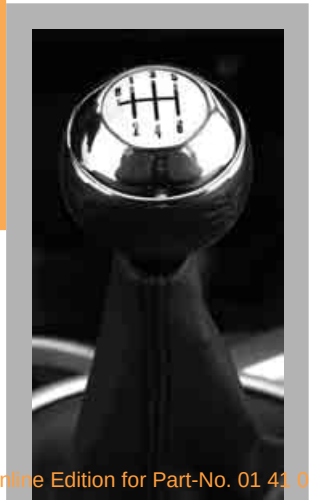

Online Edition for Part-No. 01 41 0 157 644 - © 09/03 BMW AG

CONGRATULATIONS ON YOUR NEW MINI

This Owner's Manual should be considered a permanent part of this vehicle. It should stay with the vehicle when sold to provide the next owner with important operating, safety and maintenance information.

We wish you an enjoyable driving experience.

Online Edition for Part-No. 01 41 0 157 644 - © 09/03 BMW AG

CONTENTS

NOTES

About this Owner's Manual 6
Symbols used 6
Your individual vehicle 6
Editorial notice 7
For your own safety 7
Symbol on vehicle parts 8
Service and warranty 8
Reporting safety defects 9

OVERVIEW

Cockpit 12
Display elements 13
Display elements with navigation system 14
Indicator and warning lamps 15
Multifunction steering wheels 18

CONTROLS

Opening and closing:
Keys 22
Central locking system 23
Opening and closing: from outside 23
Opening and closing: from inside 26
Tailgate 27
Electric power windows 28
Glass sunroof, electric 29
Roller sun blind 30

Adjustments:
Safe seating position 31
Seat adjustment 32
Head restraints 33
Entry to the rear 34
Safety belts 35
Seat heating 35
Steering wheel 36
Mirrors 36
Vehicle Memory 37
Transporting children safely 38

© 2003 Bayerische Motoren Werke
Aktiengesellschaft
Munich, Germany
Reprinting, including excerpts, only with the
written consent of BMW AG, Munich.
Order No. 01 41 0 157 644
US English VIII/03
Printed in Germany
Printed on environmentally friendly paper,
bleached without chlorine, suitable for recycling.

Online Edition for Part-No. 01 41 0 157 644 - © 09/03 BMW AG

Driving:
Ignition lock 41
Starting the engine 41
Switching off the engine 43
Parking brake 43
Manual transmission 44
Continuously Variable automatic Transmission (CVT) 45
Parking lamps/Low beams 48
Turn signal indicator/Headlamp flasher 49
Instrument lighting 49
Fog lamps 49
Interior lamps 50
Washer/wiper system 50
Cruise control 52

Everything under control:
Odometer 54
Tachometer 54
Fuel gauge 54
Coolant temperature gauge 55
Service interval display 56
Clock 56
Onboard computer 57

Technology for safety and driving convenience:
All Season traction Control (ASC) 59
Dynamic Stability Control (DSC) 60
Antilock Brake System (ABS) 61
Flat Tire Monitor 62
Park Distance Control (PDC) 64
Airbags 65

Controlling the climate for pleasant driving:
Air conditioning system 67
Automatic climate control 70

Interior conveniences:
Glove compartment 73
Ashtray, beverage holders 74
Cigarette lighter, 12 V power supply 74

Loading and transporting cargo:
Cargo area 75
Loading cargo 76
Roof-mounted luggage rack 78

OPERATION, CARE, MAINTENANCE

Special operating instructions:
Break-in procedures 82
General driving notes 83
Refueling 84
Fuel specifications 85
Brake system 86

Wheels and tires:
Tire inflation pressure 87
Tire coding 89
Tire condition 91
Wheel and tire replacement 92
Run Flat tires 93
Snow chains 94

Online Edition for Part-No. 01 41 0 157 644 - © 09/03 BMW AG

CONTENTS

In the engine compartment:
Bonnet 95
Engine compartment: MINI COOPER 96
Engine compartment: MINI COOPER S 97
Washer fluid 98
Engine oil 98
Coolant 100
Brake fluid 101

Maintenance and care:
MINI Maintenance System 102
Caring for your vehicle 103
Vehicle storage 105

Laws and regulations:
OBD socket 106
California Proposition 65 warning 107

OWNER SERVICE PROCEDURES

Replacement procedures:
Onboard tool kit 110
Windshield wiper blades 110
Lamps and bulbs 111
Repairing a flat tire 116
Changing tires: MINI with space-saver spare tire 117
MINI Mobility System 121
Battery 124
Fuses 125

Giving and receiving assistance:
Jump-starting 126
Towing 128

TECHNICAL DATA

Engine data 132
Dimensions 133
Weights 134
Capacities 135

Online Edition for Part-No. 01 41 0 157 644 - © 09/03 BMW AG

INDEX

Everything from A to Z 138

Online Edition for Part-No. 01 41 0 157 644 - © 09/03 BMW AG

NOTES

About this Owner's Manual

In compiling this Owner's Manual we have made every effort to furnish you with a convenient reference source affording quick access to all the essentials. The fastest way to find detailed information on any specific subject is to turn to the comprehensive index at the back of the manual. If you wish to gain an initial overview of your vehicle, you will find this in the first chapter.

Should you wish to sell your MINI at some time in the future, please remember to hand over this Owner's Manual to the new owner; it is an important part of the vehicle.

If you have any additional questions, your MINI Dealer will be glad to advise you.

Symbols used

Indicates precautions that must be followed precisely in order to avoid the possibility of personal injury and serious damage to the vehicle.

Contains information that will assist you in gaining the optimum benefit from your vehicle and enable you to care more effectively for your vehicle.

Refers to measures that can be taken to help protect the environment.

◀ Marks the end of a specific item of information.

* Indicates special equipment, country-specific equipment and optional extras when available.

Vehicle Memory, refer to page 37. Identifies functions that can be specifically adapted for a particular vehicle. These adjustments can be performed either by yourself or by your MINI Dealer.

Your individual vehicle

The manufacturer of your MINI is the Bayerische Motoren Werke Aktiengesellschaft, BMW AG.

On purchasing your MINI, you have decided in favor of a model with individualized equipment and features. This Owner's Manual describes the entire array of options and equipment that the manufacturer of your MINI makes available with a specific model range.

We hope you will understand that equipment and features are included that you might not have chosen for your vehicle. To assist you in identifying possible variations between your own vehicle and the manual's contents, the passages describing optional accessories and special equipment are marked with an asterisk*.

If your MINI features equipment that is not described in this Owner's Manual – a car radio, for instance – we have enclosed additional operating instructions. We ask you to read these manuals as well.

Online Edition for Part-No. 01 41 0 157 644 - © 09/03 BMW AG

NOTES

Editorial notice

The manufacturer pursues a policy of continuous, ongoing development that is conceived to ensure that the MINI continues to embody the highest quality and safety standards combined with advanced, state-of-the-art technology. For this reason, the features described in this Owner's Manual could differ from those on your vehicle. Nor can errors and omissions be entirely ruled out.

You are therefore asked to appreciate that no claims can be entertained on the basis of the data, illustrations or descriptions in this Owner's Manual.

For your own safety

Fuels

Use unleaded gasoline only. Fuels containing up to and including 10% ethanol or other oxygenates with up to 2.8% oxygen by weight, i.e. 15% MTBE or 3% methanol plus an equivalent amount of co-solvent, will not void the applicable warranties with respect to defects in materials or workmanship. Field experience has indicated significant differences in fuel quality, i.e. volatility, composition, additives, etc., among gasolines offered for sale in the United States and Canada. The use of poor-quality fuels may result in driveability, starting and stalling problems, especially under certain environmental conditions such as high ambient temperature and high altitude.
Should you encounter driveability problems which you suspect could be related to the fuel you are using, we recommend that you respond by switching to a recognized high-quality brand.
Failure to comply with these recommendations may result in unscheduled maintenance.
Obey pertinent safety rules when you are handling gasoline.◀

Maintenance and repair

Advanced technology, e.g. the use of modern materials and high-performance electronics, requires specially adapted maintenance and repair methods. Therefore, only have corresponding work on your MINI carried out by a MINI Dealer or a workshop that works according to MINI repair procedures with correspondingly trained personnel. If work is carried out improperly there is a danger of consequential damage and the related safety risks.◀

Online Edition for Part-No. 01 41 0 157 644 - © 09/03 BMW AG

Parts and accessories

For your own safety, use genuine parts and accessories approved by the manufacturer of the MINI.
When you purchase accessories tested and approved by the manufacturer of the MINI and Original MINI Parts, you simultaneously acquire the assurance that they have been thoroughly tested by the manufacturer of the MINI to ensure optimum performance when installed on your vehicle.
The manufacturer of the MINI warrants these parts to be free from defects in material and workmanship.
The manufacturer of the MINI will not accept any liability for damages resulting from installation of parts and accessories not approved by the manufacturer of the MINI.
The manufacturer of the MINI cannot test every product from other manufacturers to verify if it can be used on a MINI safely and without risk to either the vehicle, its operation, or its occupants.
Original MINI Parts, MINI Accessories and other products approved by the manufacturer of the MINI, together with professional advice on using these items, are available from all MINI Dealers.
Installation and operation of non-MINI approved accessories such as alarms, radios, amplifiers, radar detectors, wheels, suspension components, brake dust shields, telephones, including operation of any portable cellular phone from within the vehicle without using an externally mounted antenna, or transceiver equipment, e.g. CB, walkie-talkie, ham radio or similar, may cause extensive damage to the vehicle, compromise its safety, interfere with the vehicle's electrical system or affect the validity of the MINI Limited Warranty. See your MINI Dealer for additional information.◀

Maintenance, replacement, or repair of the emission control devices and systems must be performed by an authorized MINI Dealership or individual using certified MINI parts.◀

Symbol on vehicle parts

Indicates that you should consult the relevant section of this Owner's Manual for information on a particular part or assembly.

Service and warranty

This manual is supplemented by a Service and Warranty Information Booklet for US models or a Warranty and Service Guide Booklet for Canadian models.

We recommend that you read this publication thoroughly.

Your MINI is covered by the following warranties:

- ▷ New Vehicle Limited Warranty
- ▷ Rust Perforation Limited Warranty
- ▷ Federal Emissions System Defect Warranty
- ▷ Federal Emissions Performance Warranty
- ▷ California Emission Control System Limited Warranty.

Detailed information about these warranties is listed in the Service and Warranty Information Booklet for US models or in the Warranty and Service Guide Booklet for Canadian models.

Online Edition for Part-No. 01 41 0 157 644 - © 09/03 BMW AG

NOTES

Reporting safety defects

The following only applies to vehicles owned and operated in the US.

If you believe that your vehicle has a defect which could cause a crash or could cause injury or death, you should immediately inform the National Highway Traffic Safety Administration NHTSA in addition to notifying the MINI Division of BMW of North America, LLC, P.O. Box 1227, Westwood, New Jersey 07675-1227, telephone toll-free 1-866-275-6464.

If NHTSA receives similar complaints, it may open an investigation, and if it finds that a safety defect exists in a group of vehicles, it may order a recall and remedy campaign. However, NHTSA cannot become involved in individual problems between you, your dealer, or BMW of North America, LLC.

To contact NHTSA, you may either call the Auto Safety Hotline toll-free at 1-800-424-9393 or 366-0123 in Washington, D.C. area, or write to:
NHTSA, U.S. Department of Transportation, Washington, D.C. 20590. You can also obtain other information about motor vehicle safety from the Hotline.

Online Edition for Part-No. 01 41 0 157 644 - © 09/03 BMW AG

Online Edition for Part-No. 01 41 0 157 644 - © 09/03 BMW AG

OVERVIEW

CONTROLS

OPERATION, CARE, MAINTENANCE

OWNER SERVICE PROCEDURES

TECHNICAL DATA

INDEX

Online Edition for Part-No. 01 41 0 157 644 - © 09/03 BMW AG

COCKPIT

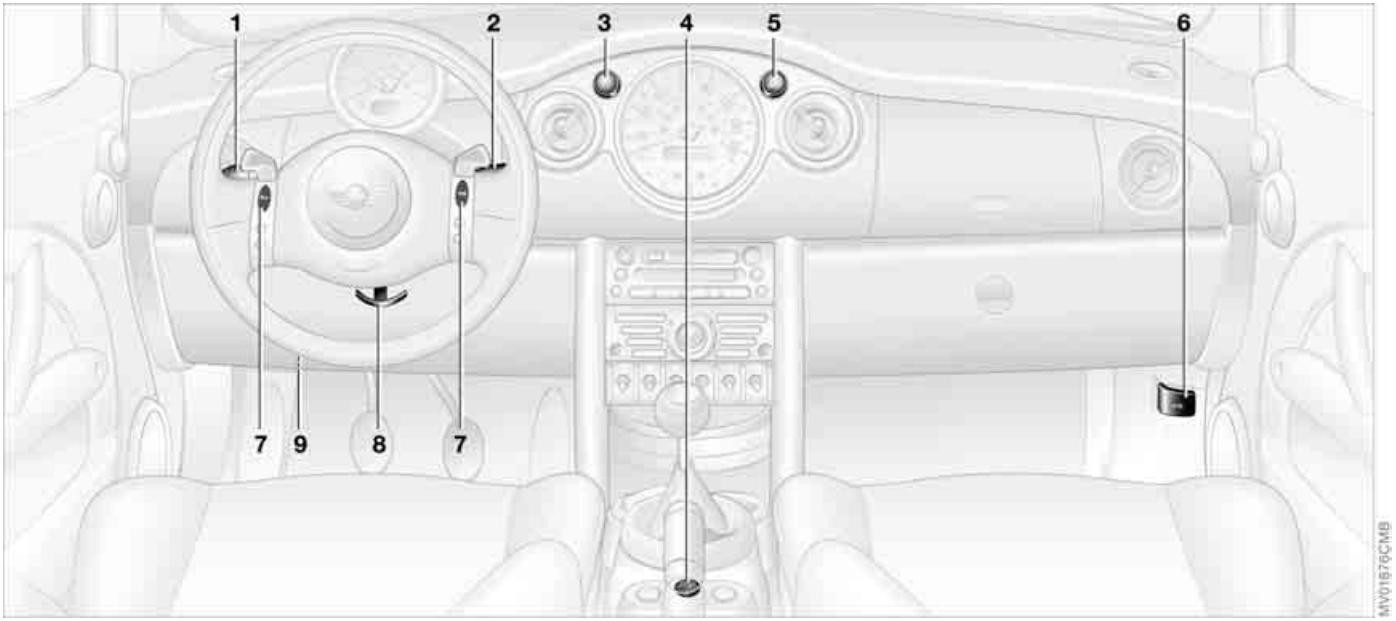

1 ▷ Parking lamps/Low beams 48
▷ Turn signal indicators 49
▷ Standing lamps 48
▷ High beams 49
▷ Headlamp flasher 49
▷ Onboard computer 57

2 Washer/wiper system 50

3 Instrument lighting 49

4 Outside mirror adjustment 36

5 Hazard warning flashers

6 Bonnet release 95

7 Horn 18

8 Adjusting steering wheel 36

9 OBD interface socket 106

Online Edition for Part-No. 01 41 0 157 644 - © 09/03 BMW AG

DISPLAY ELEMENTS

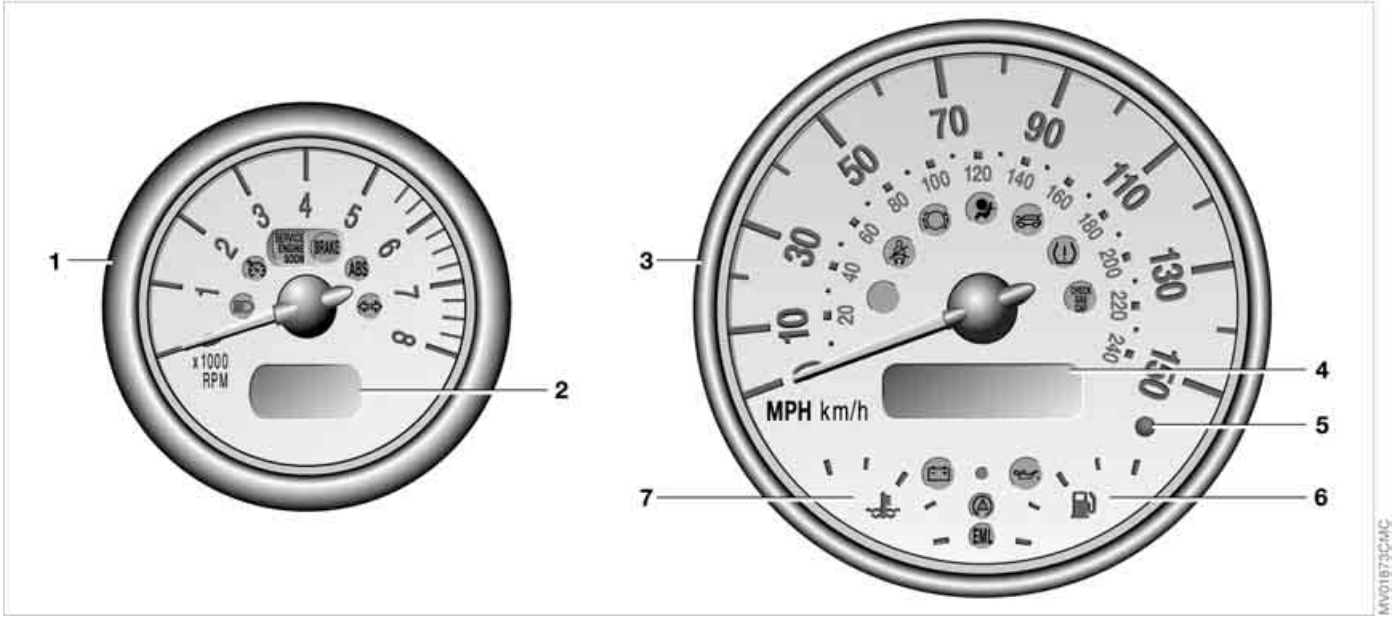

1 Tachometer 54
with indicator and warning lamps, page 15 ff

2 Display for onboard computer 57
If there is no onboard computer:
Display of outside temperature and current vehicle speed

3 Speedometer with indicator and warning lamps, page 15 ff

4 Indicator for
- ▷ Odometer 54
- ▷ Trip odometer 54
- ▷ Service interval 56
- ▷ Program display for Continuously Variable automatic Transmission (CVT) 47

5 Trip odometer, reset to zero 54

6 Fuel gauge 54

7 Engine coolant temperature gauge 55

Online Edition for Part-No. 01 41 0 157 644 - © 09/03 BMW AG

DISPLAY ELEMENTS WITH NAVIGATION SYSTEM*

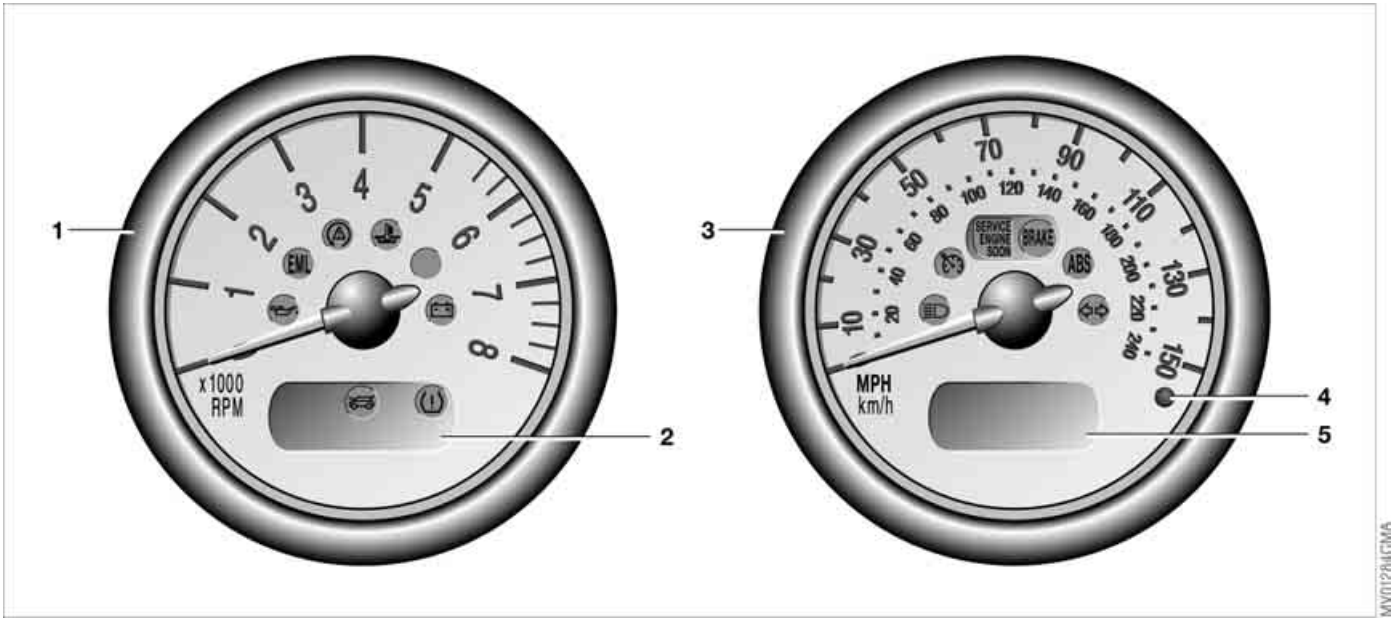

1 Tachometer 54
with indicator and warning lamps, page 15 ff

2 Additional indicator and warning lamps, page 16 ff, display for onboard computer in navigation system, refer to separate Owner's Manual

3 Speedometer with indicator and warning lamps, page 15 ff

4 Trip odometer, reset to zero 54

5 Indicator for
- ▷ Odometer 54
- ▷ Trip odometer 54
- ▷ Service interval 56
- ▷ Program display for Continuously Variable automatic Transmission (CVT) 47

Online Edition for Part-No. 01 41 0 157 644 - © 09/03 BMW AG

Technology that monitors itself

The system runs a check on the indicator and warning lamps marked by ● each time you switch on the ignition. They each light up once for different periods of time.

If a malfunction should occur in one of these systems, the corresponding lamp does not go out after the engine is started or it lights up while the vehicle is moving. You will see below the correct way to react to this.

Red: stop immediately

Battery charge current ●
The battery is no longer being charged. Indicates a defective alternator drive belt or a problem with the charge circuit. Please contact the nearest MINI Dealer.
If this lamp lights up, the power-assist for steering can be deactivated.

If the drive belt is defective, do not continue driving. The engine could be damaged due to overheating. When the power-assist is deactivated, increased steering effort is required.◀

Engine oil pressure ●
Stop immediately. Switch off engine. Check the engine oil and fill as needed. Please contact the nearest MINI Dealer.

Do not continue driving; otherwise, the engine could be damaged because of inadequate lubrication.◀

Brake warning lamp ●
Lights up although parking brake is released: check the brake fluid level. Before driving further, be sure to comply with the information on pages 86 and 101.

Brake warning lamp for Canadian models.

With navigation system option:

Coolant temperature warning lamp in the speedometer ●
Lights up while driving:
Engine is too hot. Switch off the engine immediately and allow to cool down, also refer to page 55.

Online Edition for Part-No. 01 41 0 157 644 - © 09/03 BMW AG

Yellow: stop immediately

Flat Tire Monitor ●
Flashes: tire failure.
Reduce speed immediately and stop the vehicle.

With Run Flat tires:
Carefully reduce the driving speed to below 50 mph / 80 km/h and continue to a safe location.

In both cases, avoid hard brake applications and steering maneuvers. Check the tire inflation pressures.
Conduct in the event of a flat tire, refer to pages 93, 116, 117, 121.

General information on the system, refer to page 62.

Red and yellow: continue driving cautiously

Brake warning light together with yellow indicator lamp for ABS, CBC, EBD and ASC/DSC:
The control system ABS, CBC, EBD and ASC/DSC has failed. Drive cautiously and defensively. Avoid full brake applications.
Please have the system checked by your MINI Dealer as soon as possible.
More information on pages 59, 60.

Brake warning lamp together with the yellow indicator warning lamps ABS, CBC, EBV and ASC/DSC for Canadian models.

Red: an important reminder

Brake warning lamp
with parking brake applied.
More information on the parking brake on page 43.

Brake warning lamp for Canadian models.

Fasten safety belts ●
Lights up for several seconds or, depending on the version, until after the safety belts are fastened. A signal* also sounds depending on the version.
More information on page 35.

Depending on the level of equipment, the indicator lamp is in the vicinity of the navigation system.◀

Airbags ●
Please have the system inspected at your MINI Dealer.
More information on page 65.

Depending on the level of equipment, the indicator lamp is in the vicinity of the navigation system.◀

Bonnet/Tailgate
Lights up when the bonnet and/or tailgate are open.
More information on pages 27, 95.

Brake pads
Have the condition of the brake pads checked.
More information on page 86.

Depending on the level of equipment, the indicator lamp is in the vicinity of the navigation system.◀

Online Edition for Part-No. 01 41 0 157 644 - © 09/03 BMW AG

Yellow: check as soon as possible

Flat Tire Monitor ●
Stays lit: the system is defective. Please have the system inspected at your MINI Dealer.
More information on page 62.

Antilock Brake System (ABS) ●
ABS has been deactivated in response to system malfunction. Conventional braking efficiency is available. Please have the system inspected at your MINI Dealer.
More information on page 61.

ABS indicator lamp for Canadian models.

All Season traction Control (ASC)/ Dynamic Stability Control (DSC) ●
Indicator lamp flashes:
System active: drive and braking forces are regulated.
The indicator lamp stays lit: ASC/DSC switched off with button or defective. In the event of a defect: please have the system inspected at your MINI Dealer.
More information on pages 59, 60.

Service Engine Soon ●
If the warning lamp comes on either continuously or intermittently, this indicates a malfunction in the emissions-related electronic systems. Although the vehicle remains operational, you should have the systems checked by your MINI Dealer at the earliest possible opportunity.

Service Engine Soon warning lamp for Canadian models.

Engine electronics* ●
Malfunction in the engine electronics. You can continue to drive with reduced engine output or engine speed. Please have the system inspected at your MINI Dealer.

Check Gas Cap* ●
This indicator lamp comes on when the fuel gas cap is loose or missing. Close the gas cap tightly:
Refer to page 85.

Depending on the level of equipment, the indicator lamp is in the vicinity of the navigation system.◀

Green: for your information

Turn signal indicators
Flashes when turn signal indicator is on.
Rapid flashing: the system is defective.
More information on page 49.

Cruise control
Lights up when the cruise control is activated: operation via the multifunction steering wheel or multifunction sports steering wheel.
More information on page 52.

Blue: for your information

High beams
Comes on when the high beams are on or the headlamp flasher is actuated.
More information on page 49.

Online Edition for Part-No. 01 41 0 157 644 - © 09/03 BMW AG

Steering wheels with multifunctions

The control buttons integrated within the multifunction steering wheel and the multifunction sports steering wheel have been designed to allow you to operate a number of accessories both quickly and safely, without taking your eyes from the road:

▷ Some audio source functions
▷ Cruise control.

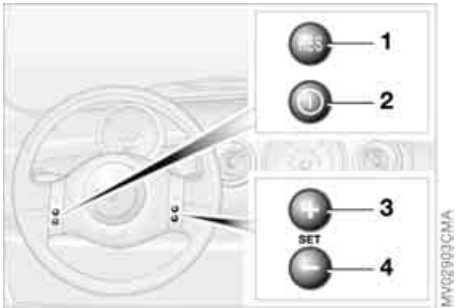

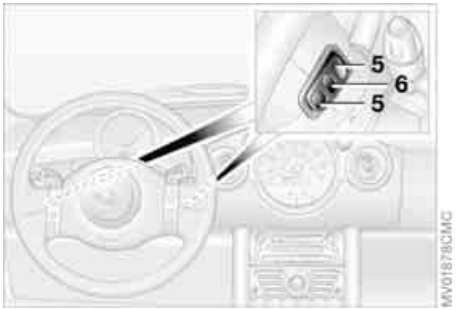

Steering wheel

1 Call up and continue cruise control
2 Activate/interrupt/deactivate cruise control
3 Store and accelerate cruise control
4 Store and decelerate cruise control

Right:

5 Volume
6 Changing between radio, CD and cassette

Left:

5 Operation of:
▷ Radio
Press briefly: next/previous station stored in memory
Extended pressure: station scan
▷ CD
Press briefly: jump to next track
Extended pressure: search within current title
▷ Cassette
Press briefly: jump to next track or stop fast forward
Extended pressure: fast forward/rewind

If the Wave radio is installed, the above options for cassette player operation are not available.◀

Online Edition for Part-No. 01 41 0 157 644 - © 09/03 BMW AG

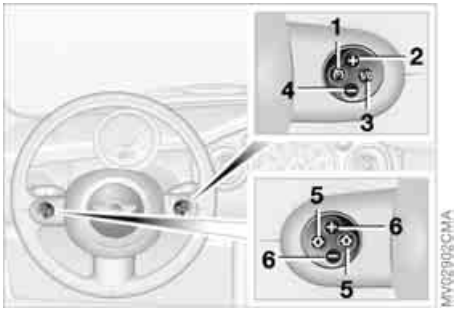

Sports steering wheel

1 Call up and continue cruise control

2 Store and accelerate cruise control

3 Activate/interrupt/deactivate cruise control

4 Store and decelerate cruise control

5 Fast forward/rewind

▷ Radio
Press briefly: next/previous station stored in memory
Extended pressure: station scan

▷ CD
Press briefly: jump to next track
Extended pressure: search within current title

▷ Cassette
Press briefly: jump to next track or stop fast forward
Extended pressure: fast forward

If the Wave radio is installed, the above options for cassette player operation are not available.◀

6 Volume

Online Edition for Part-No. 01 41 0 157 644 - © 09/03 BMW AG

Online Edition for Part-No. 01 41 0 157 644 - © 09/03 BMW AG

OVERVIEW

CONTROLS

OPERATION, CARE, MAINTENANCE

OWNER SERVICE PROCEDURES

TECHNICAL DATA

INDEX

Online Edition for Part-No. 01 41 0 157 644 - © 09/03 BMW AG

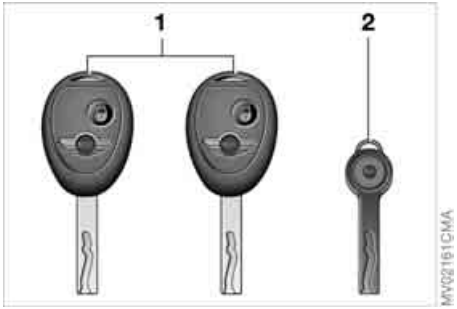

The key set of your MINI consists of three keys.

1 Two master keys with remote control

If the battery is discharged, please consult your MINI Dealer. For changing the battery, refer to the next section.◀

2 Spare key
For keeping in a safe place, e.g. in your wallet. This key is not intended for constant use

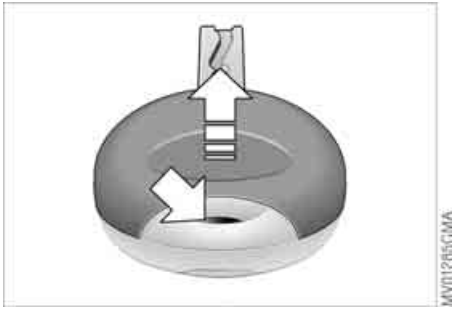

Changing battery

Replace if it is no longer possible to unlock the vehicle via the remote control.

Only use a battery of the type specified on the battery, CR 2032, and make absolutely sure that it is fitted in the correct position.◀

1. Apply a screwdriver at the recess
2. Use the screwdriver to lever out the cover.

Return used batteries to a recycling point or your MINI Dealer.◀

Initializing the master key with remote control

When you activate a master key with remote control – for example a replacement or additional key, or after a battery change – it must be initialized.

This initialization can be performed in two ways:

Press button or button , refer to page 24, four times in succession

or

if the vehicle is unlocked:

1. Switch the ignition on briefly, position 2, and then off
2. Within 10 seconds, press button and button , refer to page 24, in succession.

In the event of a system malfunction, please contact your MINI Dealer. You can also obtain replacement keys and batteries there.◀

Online Edition for Part-No. 01 41 0 157 644 - © 09/03 BMW AG

The concept

The central locking system is ready for operation whenever the driver's door is closed. The doors, the tailgate and the fuel filler door are unlocked or locked.

The central locking system secures your MINI:

▷ When operated from the outside via the remote control as well as via the door lock
▷ When operated from the inside via a switch.

If operated from outside, the anti-theft system is activated at the same time. This prevents the doors from being unlocked via safety lock buttons or door handles.

In the event of an accident, the central locking system unlocks automatically. The hazard warning system and interior lamps are also switched on.

Via remote control

The remote control gives you an exceptionally convenient method for unlocking and locking your vehicle. It also offers additional functions:

▷ To open the power windows and the glass sunroof, refer to page 24.

Locking/unlocking the vehicle automatically activates/deactivates the anti-theft system and switches the interior lamps off/on.

If the vehicle has been properly locked using the remote control, the hazard warning system flashes once.
When the vehicle is unlocked, the hazard warning system does not react.

⚠ Children might be able to lock the doors from the inside. Always take the vehicle keys with you so that the vehicle can be opened again from the outside at any time.◀

For US owners only

The transmitter and receiver units comply with part 15 of the FCC, Federal Communications Commission, regulations. Operation is governed by the following:

FCC ID: LX8765S
LX8765E
LX8CAS

Compliance statement:

This device complies with part 15 of the FCC Rules. Operation is subject to the following two conditions:

▷ This device may not cause harmful interference, and
▷ this device must accept any interference received, including interference that may cause undesired operation.

▷ Any unauthorized modifications or changes to these devices could void the user's authority to operate this equipment.◀

Online Edition for Part-No. 01 41 0 157 644 - © 09/03 BMW AG

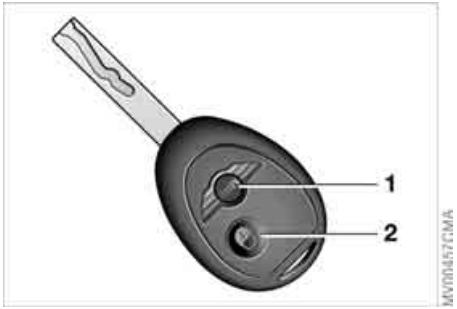

1 Unlocking and convenience opening
2 Locking and securing

If the remote control does not react, the battery is discharged.
In the event of a system malfunction, please contact your MINI Dealer. You can also obtain replacement keys and batteries there.
Battery changing, refer to page 22.◀

Unlocking

1. Press button once to unlock the driver's door only.
   The interior lamps are switched on and the hazard warning flashers flash twice*
2. Press button a second time to unlock the other door as well as the tailgate and the fuel filler door.

You can have this function activated/deactivated by your MINI Dealer.◀

If none of the vehicle doors are opened within 2 minutes, the central locking system locks the vehicle automatically. The anti-theft system is not activated. To deadlock the vehicle, refer to the next column.◀

You can have the vehicle's automatic locking feature activated/deactivated.◀

Convenience opening mode

Press and hold button .
The power windows and glass sunroof are opened.

You can have the opening of the windows and glass sunroof with the remote control activated/deactivated.◀

Convenience closing is not possible by means of the remote control.◀

Locking and securing

Press button .
The hazard warning system flashes once.

Online Edition for Part-No. 01 41 0 157 644 - © 09/03 BMW AG

Malfunctions

External systems or devices may cause local interference in the functions of the remote control.

In this case, unlock the vehicle via the door lock.

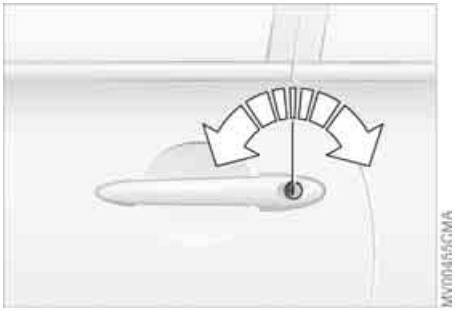

Via the door lock

1. One turn of the key in the driver's door lock unlocks the driver's door only
2. Turning the key a second time unlocks the other door, the tailgate and the fuel filler door.

You can have this function activated/deactivated by your MINI Dealer.◀

If the vehicle has been properly locked, the hazard warning system flashes once.
When the vehicle is unlocked, the hazard warning system flashes twice*.

Manual operation

In the event of electrical malfunction:

The driver's door can be locked or unlocked by turning the key in the door lock all the way to the left or right.

Convenience closing via the door lock

You can also close the power windows and the glass sunroof via the door lock.

With the door closed, hold the key in the locking position.

You can have the closing of the windows and glass sunroof via the door lock activated/deactivated.◀

Online Edition for Part-No. 01 41 0 157 644 - © 09/03 BMW AG

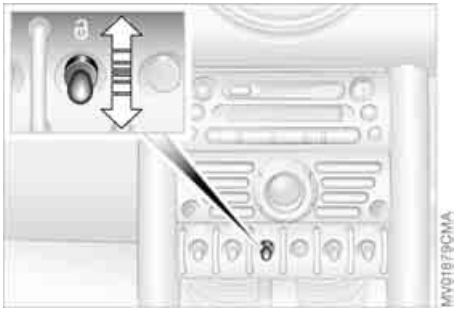

With this switch, you operate the central locking system when the doors are closed. The doors and tailgate are unlocked or locked only. The anti-theft system is not activated.

If the remote control has been used to unlock only the driver's door, refer to page 24, and you touch the switch when the driver's door is open, the other door, the tailgate, and the fuel filler door are unlocked.
If the driver's door is closed, touching the switch locks it.◀

To lock

Briefly press the switch downward

or

push down the safety lock buttons on the doors.

After you have driven off, the central locking system automatically locks your MINI once a certain speed has been reached.◀

You can have this function activated/deactivated by your MINI Dealer.◀

Do not lock the safety lock buttons while driving, since these doors will not unlock automatically in the event of an accident. Children might be able to lock the doors from the inside. Always take the vehicle's keys with you so that you can open the vehicle again from the outside at any time.◀

To unlock and open the doors

1. Briefly press the switch upward
2. Pull the door handle above the armrest

   or

   pull the door handle for each door twice: to unlock first and then open.

Online Edition for Part-No. 01 41 0 157 644 - © 09/03 BMW AG

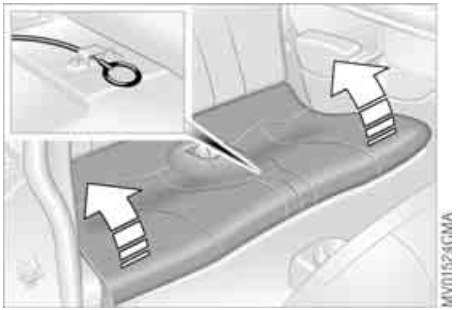

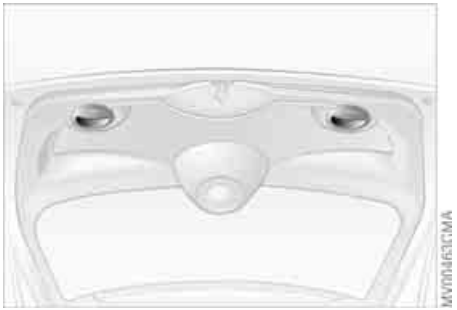

To open from the outside

Push the button in the strip handle and open the tailgate.

For information on unlocking via the central locking system, refer to page 26.

To unlock manually

In the event of an electrical malfunction, you can also unlock the tailgate manually.

1. Fold the rear seat bench upwards
2. Pull the ring.
   The tailgate is unlocked.

To close

The handle recesses in the interior trim panel of the tailgate make it easier to pull the lid down.

⚠ To avoid injuries, be sure that the travel path of the tailgate is clear when it is closed, as with all closing procedures.
Operate the vehicle only when the tailgate is closed. Otherwise, exhaust fumes could penetrate the interior of the vehicle.◀

Should it be absolutely necessary to operate the vehicle with the tailgate open:

1. Close all windows and the glass sunroof
2. Sharply increase the air supply for the air conditioning or automatic climate control, refer to page 67 or 70.

Online Edition for Part-No. 01 41 0 157 644 - © 09/03 BMW AG

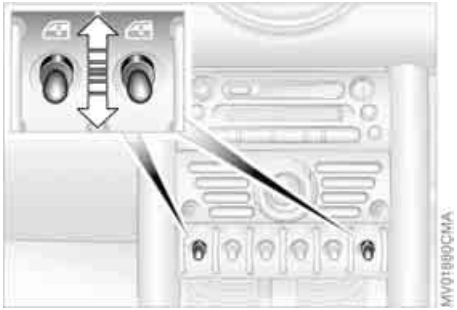

To open and close windows

From ignition key position 1:

To open:

Press the switch downwards.
The window opens until you release the switch

or

briefly press the switch downwards.
The window opens automatically.
Pressing the switch again stops the operation.

To close:

Press the switch upwards.
The window closes until you release the switch

or

with the engine running:

Briefly press the switch upwards.
The window closes automatically.
Pressing the switch again stops the operation.

The window on the front passenger's side cannot be closed automatically.◀

Watch during the closing process to be sure that no one is injured.◀

After the ignition has been switched off:

You can continue using the electric power windows for a limited period as long as no one opens any of the doors.
If a door is opened during operation, the opening/closing process stops immediately.

When leaving the vehicle, always remove the ignition key from the lock and remember to close the doors, e.g. to prevent children from operating the power windows and injuring themselves.◀

Convenience operation

For convenience operation using the remote control refer to page 24, for operation via the door lock refer to page 25.

To initialize power windows

If the battery is disconnected, e.g. for changing batteries or vehicle storage, re-initialize the power windows. Otherwise the windows will not be lowered when the door is opened.◀

1. Close the doors
2. Close both windows
3. Hold both switches of the power windows up for approx. one second.

In the event of a system malfunction, please contact your MINI Dealer.◀

Online Edition for Part-No. 01 41 0 157 644 - © 09/03 BMW AG

GLASS SUNROOF, ELECTRIC*

To prevent injuries, exercise care when closing the glass sunroof and keep it in your field of vision until it is shut. Make sure that the closing path of the sunroof is clear.
When leaving the vehicle, always remove the ignition key from the lock and remember to close the doors, e.g. to prevent children from operating the sunroof and injuring themselves.
Be sure that adequate clearance is maintained for the opening path of the glass sunroof; otherwise damage can occur.◀

Convenience operation

For convenience operation using the remote control refer to page 24, for operation via the door lock refer to page 25.

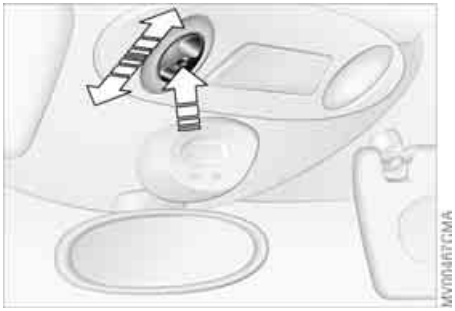

To raise

From ignition key position 1:

Press the switch

or

push the switch backwards to the resistance point.

To open and close

From ignition key position 1:

1. Push the switch in the desired direction until you feel resistance, and hold in this position
2. Release the switch when the desired sunroof position has been reached.

Do not use force to close the glass sunroof in its raised position, as damage to the mechanism could result.◀

After the ignition has been switched off:

You can continue using the electric power windows for a limited period as long as no one opens any of the doors.
If a door is opened during operation, the opening/closing process stops immediately.

Automatic opening and closing

From ignition key position 2:

To open:

Push the switch back past the point of resistance:
The sunroof opens completely.

To close:

1. Press the switch past the pressure point:
   The sunroof closes to the raised position
2. Press the switch again and keep it depressed:
   The sunroof closes completely.

Touching the switch briefly during opening and closing stops the movement immediately.

Online Edition for Part-No. 01 41 0 157 644 - © 09/03 BMW AG

Pinch protection

If, while closing, the glass sunroof encounters resistance within roughly the last 8 in / 20 cm, the closing procedure is interrupted and the roof reopens.

⚠ Despite the pinch protection, be extremely careful that the travel path of the sunroof is not obstructed whenever it is closed. Otherwise, it is not guaranteed that the closing procedure will be interrupted, for instance if the obstructions offer very little resistance.
You can disable the pinch protection by pressing the switch past the pressure point and holding it.◀

⚠ When closing the sunroof from the raised position, ensure that the travel path of the sunroof is not obstructed since the pinch protection is not active in this position.◀

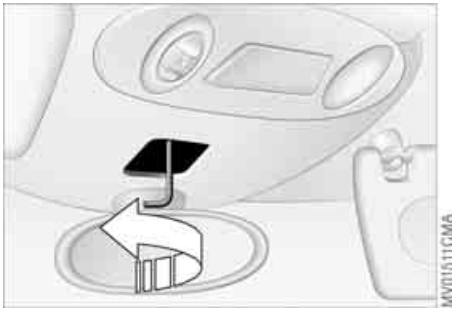

Manual opening and closing

In the event of an electrical malfunction, you can also open and close the glass sunroof manually:

1. Push the clock towards the interior and remove
2. Use an Allen key to turn the glass sunroof in the direction required.

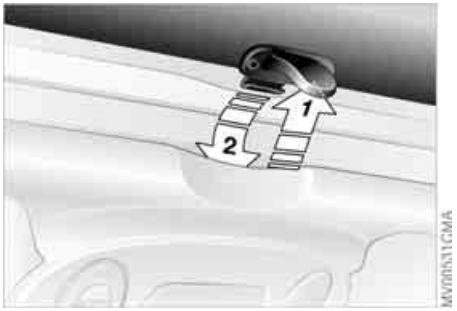

1 Opening

1. Press the button in the handle, arrow 1
   The cap is unlocked
2. Guide the roller sun blind towards the back.

2 Closing

1. Use the handle to pull the roller sun blind forwards
2. Engage the handle in the device, arrow 2.

Online Edition for Part-No. 01 41 0 157 644 - © 09/03 BMW AG

The ideal seating position can make a vital contribution to relaxed, relatively fatigue-free driving. Together with the safety belts and airbags, the seating position also plays an important role in providing occupants with maximum levels of passive safety in an accident. To ensure that the safety systems operate with optimal efficiency, we strongly urge you to observe the instructions contained in the following section.

For additional information about transporting children safely, refer to page 38.

Sitting safely with airbags

Always maintain an adequate distance between yourself and all of the airbags. Always hold the steering wheel by the rim with the hands at the 9 and 3 o'clock positions to keep any chance of injury to hands or arms to an absolute minimum, should the airbag be deployed.
No one and nothing is to come between the airbags and the seat occupant. Do not use the front passenger airbag cover as a storage surface for objects of any kind.
Ensure that the front passenger is correctly seated, i.e. that no feet or legs are propped against the dashboad. Otherwise, leg injury could result if the front passenger airbag suddenly deployed. Never let an occupant's head rest near or on a side airbag because the inflating airbag could cause a serious or fatal injury.◀

Even if all these instructions are followed, it cannot entirely be ruled out that in some circumstances injury may result from contact with the airbags. In sensitive individuals, the ignition and inflation noise may induce a mild hearing loss that is usually temporary.

For airbag locations and additional information on airbags, refer to page 65.

Safe seating position with safety belt

Fasten your safety belt before each drive. Airbags are an additional safety device and work in conjunction with the safety belts, but do not replace them.

Your vehicle is equipped with four seats, each of which is provided with a safety belt.

At all times, occupants should sit upright and be properly restrained – infants and small children in appropriate child-restraint systems; larger children and adults using the safety belts.
Expectant mothers should always wear their safety belts, taking care to position the lap belt against the lower hips, where it will not exert pressure against the abdominal area.
Never allow more than one person to wear a single safety belt. Never allow infants or small children to ride in a passenger's lap. Do not route the belt across your neck, or run it across sharp edges. Be sure that the belt does not become caught or jammed. Avoid twisting the belt while routing it firmly across the hips and shoulder; wear it as snugly against your body as possible and do not allow it to rest against sharp or fragile objects. Otherwise, the belt could slide over your hips in the event of a frontal impact and cause abdominal injury. Avoid wearing bulky clothing and pull on the lap belt periodically to retension it over your shoulder. Otherwise, the safety belt's restraint effectiveness could be reduced.◀

For information on using the safety belts, refer to page 35.

Online Edition for Part-No. 01 41 0 157 644 - © 09/03 BMW AG

Important adjustment information

Never try to adjust your seat while operating the vehicle. The seat could respond with an unexpected movement, and the ensuing loss of vehicle control could lead to an accident.
While driving, do not recline the backrest too far toward the rear. This especially applies to the front passenger side. If you do so, there is a risk that you will slide under the safety belt in an accident, thus reducing the protection provided by the safety belt.◀

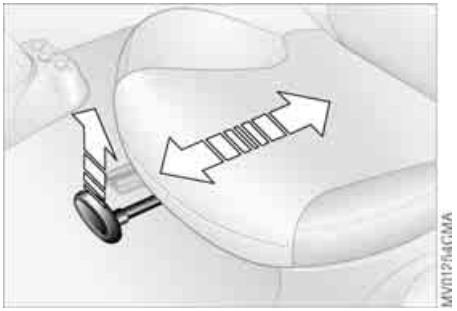

Longitudinal adjustment

1. Lift the handle
2. Push the seat into the desired position
3. After releasing the handle, apply pressure to the seat to ensure that the latch engages securely.

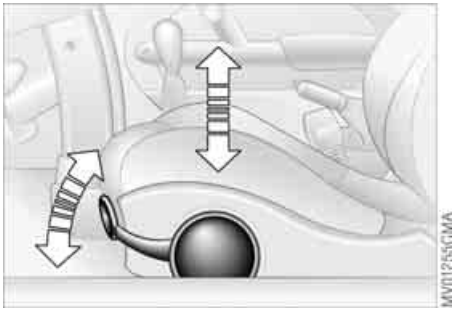

Height adjustment

1. To raise:
   Pull the handle up repeatedly, continuing until the seat reaches the desired height
2. To lower:
   Push the handle repeatedly, continuing until the seat reaches the desired height.

Online Edition for Part-No. 01 41 0 157 644 - © 09/03 BMW AG

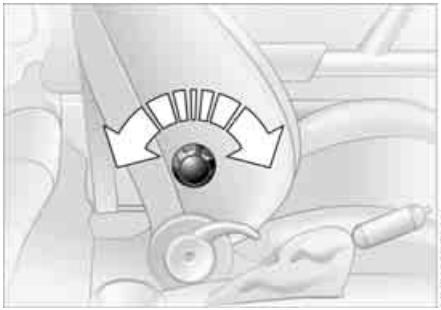

Lumbar support*

You can adjust the contour of the backrest for additional support in the curvature of your spine's lumbar region. The upper hips and spinal column receive supplementary support to help you maintain a relaxed, upright posture.

Turn the wheel.
The contour is strengthened or weakened.

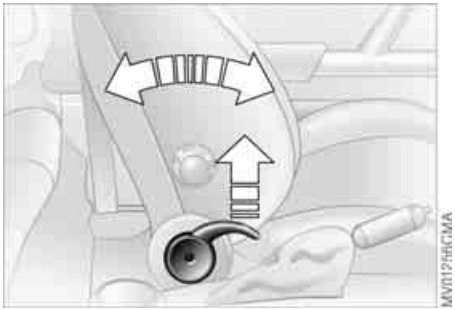

Backrest tilt

1. Pull up the lever at the inside of the seat
2. Apply weight to or remove weight from the backrest as required
3. Release the lever so that the backrest locks into place.

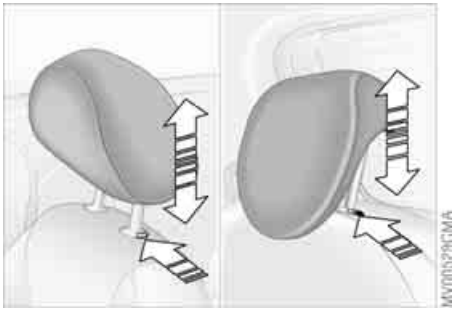

Adjusting

To raise: pull the head restraint upward.

To lower: press the button and push the head restraint downward.

⚠ You can reduce the risk of spinal injury and whiplash by adjusting the head restraint to a height at which it is centered roughly at ear level.◀

Online Edition for Part-No. 01 41 0 157 644 - © 09/03 BMW AG

HEAD RESTRAINTS

Removal

1. Pull up the head restraint, continuing until it is at maximum extension
2. Press the button and remove the head restraint at the same time.

Installation

1. Press the button and at the same time insert the head restraint in the reception points
2. Adjust the head restraint.

To avoid possible violation of traffic laws, never retract the head restraints unless the rear seats are empty. Always ensure that the head restraints are raised before transporting passengers in the rear seat.◀

ENTRY TO THE REAR

Easy entry

The Easy entry function includes a memory for the longitudinal seat and the backrest positions.

1. Push down the lever at the outside of the seat, arrow 1.
   The backrest folds forward automatically
2. Push the seat forward, arrow 2.

Original position

Slide the seat back to its home position before folding back the backrest, otherwise the seat is latched in at its current position. In this case, adjust the longitudinal position manually, refer to page 32.◀

1. Push the seat back into its home position
2. Fold the backrest back to the home position to lock the seat.

When returning the seat to the rear position, ensure that no one is injured and that no objects are damaged. Engage and lock both seats and backrests into position prior to driving; otherwise unexpected movement could increase the risk of accident.◀

Online Edition for Part-No. 01 41 0 157 644 - © 09/03 BMW AG

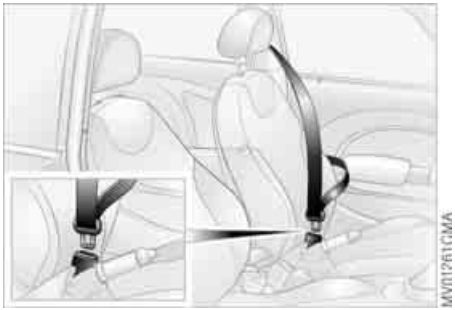

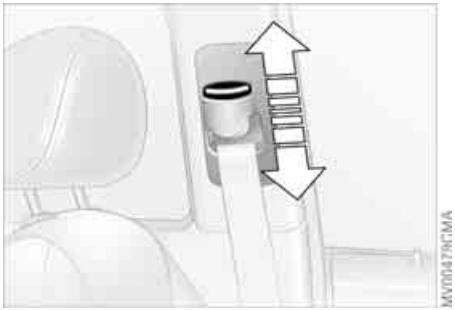

To close

Make sure you hear the lock engage in the belt buckle.

Fasten safety belts: the warning lamp lights up until after the safety belt is fastened. An acoustic signal sounds for several seconds.

To release

1. Press the red button in the belt buckle
2. Hold the belt
3. Guide the belt back into its reel.

Safety belt height adjustment

Use the height adjustment mechanism to adapt the safety belt to the ideal position for your own body:

Press the button and at the same time push the entire unit upwards or downwards.

Also observe the instructions on adjusting the seats on page 31.

Damaged safety belts

If the safety belts are damaged or stretched in an accident: have the safety belt system replaced by your MINI Dealer and the belt anchors checked, otherwise the safety function can no longer be guaranteed. If a child-restraint system was in the vehicle during an accident, consult the manufacturer's instructions regarding replacement.◀

SEAT HEATING*

The seat cushion and backrest can be heated with the ignition key in position 2.

Select the temperature setting:

Press each button briefly.

Direct deactivation from the second temperature setting:

Press the button for a longer period.

Online Edition for Part-No. 01 41 0 157 644 - © 09/03 BMW AG

STEERING WHEEL

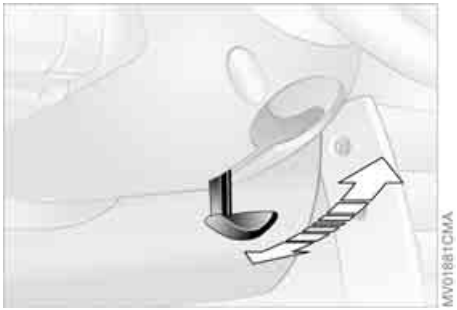

Do not adjust the steering wheel while the vehicle is moving; otherwise unexpected movement could increase the risk of accident.◀

Adjusting

1. Push the locking lever downward
2. Adjust the desired steering wheel position
3. Pull the lever back in.

MIRRORS

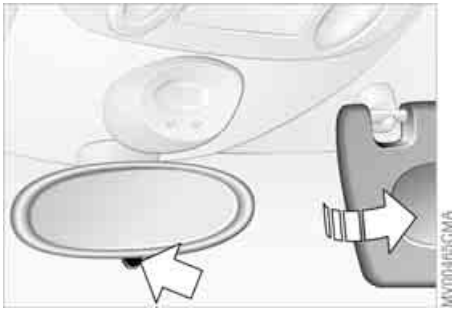

Outside mirror adjustment

1 Switch for choosing between the left and right mirror

2 Switch for 4-way adjustment

Manual adjustment

The mirrors can also be adjusted manually:

Press the edge of the lens.

Electric heating*

Both mirrors are heated automatically when the ignition key is in position 2.

Interior rearview mirror

To reduce glare from vehicles behind you when you are driving at night:

Tilt the lever forward.

Illuminated vanity mirror

From ignition key position 1:

1. Fold down the sun visor
2. Fold the cover panel upwards.

Sun visors

Can be swung sideways.

Online Edition for Part-No. 01 41 0 157 644 - © 09/03 BMW AG

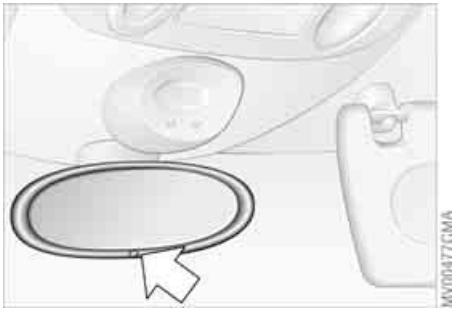

Interior mirror, automatic dimming*

This mirror dims automatically as required.

The mirror becomes clear again when you engage reverse gear or select position R on the selector lever.

Keep the photocells free and clean to ensure that the mirror functions perfectly. There is one photocell in the mirror frame; the other is on the back of the mirror.

▷ Do not cover the area between the inside rearview mirror and the windshield, and do not place stickers or toll tags on the windshield in front of the mirror.◀

How the system functions

No doubt you have often reflected on how great it would be if you could configure your vehicle's various adjustment settings to meet your own personal requirements. In developing this vehicle, the manufacturer of the MINI has incorporated a number of options that you or your MINI Dealer can program to suit your individual preferences.

What the system can do

Your MINI Dealer can provide you with details on the capabilities of the Vehicle Memory system.

Examples for Vehicle Memory:

- ▷ Automatic locking if none of the vehicle doors are opened, refer to page 24
- ▷ Automatic locking after starting to drive, refer to page 26
- ▷ Selective central locking system, refer to pages 24, 25
- ▷ Convenience operation, refer to pages 24, 25
- ▷ 'Follow-me-home' lamps, refer to page 48
- ▷ Daytime driving lamps, refer to page 49
- ▷ Speed-dependent windshield wipers, refer to page 51
- ▷ Setting units for outside temperature and fuel consumption display, refer to page 57
- ▷ Setting units for display of temperatures specified for automatic climate control system, refer to page 71
- ▷ Volume control PDC, refer to page 64
- ▷ Acoustic alarm for starting PDC activation, refer to page 64.

This symbol alerts you to Vehicle Memory functions in the Owner's Manual.◀

▷ After memory functions have been reconfigured, your vehicle may operate slightly differently from the descriptions used in this Owner's Manual. If you decide to sell your MINI one day, please remember to have the memory functions reset to their default configuration.◀

Online Edition for Part-No. 01 41 0 157 644 - © 09/03 BMW AG

The proper place for children

Children should always sit in the rear:

Accident research shows that the safest place for children in a vehicle is in the rear seat.

Older children should be tightly secured with a safety belt, after they have outgrown a booster seat that is appropriate for their age, height and weight.

A child sitting in the rear seat and not properly restrained may place his or her head on or near the airbag, if so equipped. For example, a child – even though belted – may fall asleep with his or her head against the side airbag. It may be difficult for a driver to ensure that children in the rear seat will remain properly positioned at all times and do not place their heads on or near the side airbag. Therefore, we recommend that the rear side airbags, if provided, be deactivated if you plan to transport children in the rear seat.◀

Child-restraint system in the rear

Children under 13 years of age and children less than 5 ft / 150 cm tall should always ride in the rear and the restraint systems should be secured with the vehicle's safety belts.◀

Younger children should be secured in an appropriate forward-facing child-restraint system that has first been properly restrained. We strongly urge you to carefully read and comply with the instructions for installation and use provided by the child-restraint's manufacturer whenever you use such a device.

All rear seating positions in your vehicle meet the recommendations of SAE J1819, an industry-recommended practice for securing child-restraint systems in motor vehicles.

Exception for the front passenger seat

Never install a rearward-facing child-restraint system in the front passenger seat of this vehicle if the passenger's airbag is not deactivated. If you do so, the child could be severely injured or killed when the airbag is triggered. Your vehicle is equipped with an airbag supplemental restraint system for the front passenger. Because the backrest on any rearward-facing child-restraint system – of the kind designed for infants under 1 year and 20 lbs / 9 kg – would be within the airbag's deployment range, you should never mount such a system in the front passenger seat, since the impact of the airbag against the child restraint's backrest could lead to serious or fatal injuries.◀

Online Edition for Part-No. 01 41 0 157 644 - © 09/03 BMW AG

Installing child-restraint systems

Before installing any child-restraint system or child seat, read the following:

⚠ Always follow the manufacturer's instructions concerning installation and use; otherwise the system's protective function could be impaired.
After an accident, have all parts of the affected safety belt system inspected and/or replaced by your MINI Dealer.◀

Commercially available child-restraint systems are designed to be secured with a lap belt or with the lap belt portion of a combination lap/shoulder belt. Improperly or inadequately installed restraint systems can increase the risk of injury to children. Always read and follow the instructions that come with the system.

Child seat security

All of the rear belt retractors and the front passenger's safety belt can be locked for mounting and securing child-restraint systems.

Information regarding this is located near the buckle latch of each safety belt.

To lock the belt

Pull the entire length of the belt from the belt retractor. Allow the reel to retract the belt somewhat and engage the buckle, then tighten the belt against the child-restraint system.
The retraction mechanism is now locked.

To unlock the belt

Release the buckle, remove the child-restraint system and allow the belt retractor to reel the belt completely in.

Online Edition for Part-No. 01 41 0 157 644 - © 09/03 BMW AG

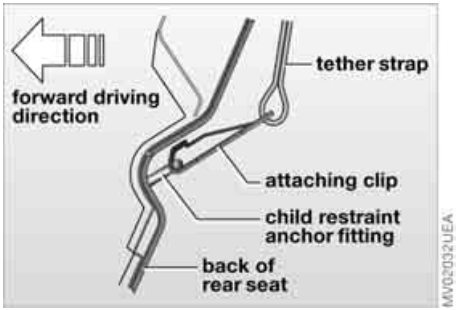

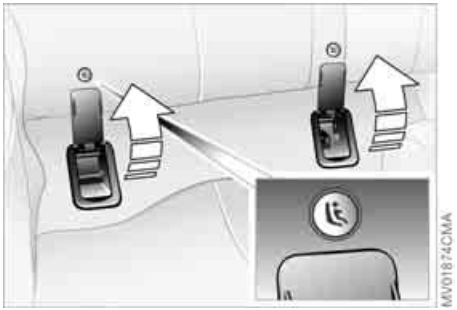

Child-restraint system with tether strap

If you use a child-restraint system with a tether strap:

Depending on the location selected for seating in the rear passenger area, attach the tether strap to the corresponding anchorage point to secure the child-restraint system.

Both seating positions are fitted with a head restraint.

Lift the head restraint and pass the tether strap between the head restraint and the seat back. It is recommended to readjust the head restraint into the lowest possible position.

Adjust the tether strap according to the child-restraint manufacturer's instructions.

LATCH child-restraint mounting system

Open the cover.

The illustration is an example showing the mounts for the LATCH, Lower Anchors and Tethers for CHildren, child-restraint mounting system at the right rear.
The system is also available at the left rear position.

Canadian models only:
The LATCH anchorage points are identified by buttons, see illustration.

Always follow all manufacturer's instructions and observe all safety precautions when installing the LATCH child-restraint system.◀

Online Edition for Part-No. 01 41 0 157 644 - © 09/03 BMW AG

IGNITION LOCK

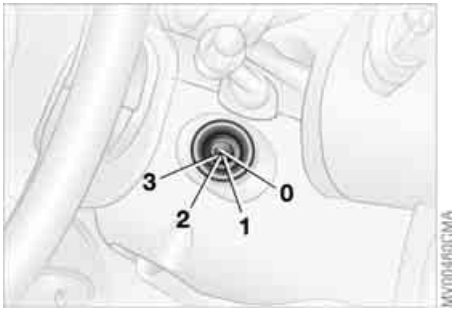

0 Steering locked

The key can be inserted or removed in this position only.

To lock the steering:

1. Remove the key
2. Turn the steering wheel slightly to the left or right until the lock engages.

A sound alarm goes off if the key remains in the ignition after opening the driver's door.

Vehicles with Continuously Variable automatic Transmission (CVT):

Do not move the selector lever from position P until the engine is running. The ignition key cannot be turned to position 0 and removed until the selector lever is in position P, interlock.

1 Steering unlocked

Individual electrical accessories are ready for operation.

You will find that it is often easier to turn the ignition key from position 0 to position 1 when you move the steering wheel slightly to help disengage the lock.

2 Ignition switched on

All electrical accessories are ready for operation.

3 Starting the engine

Vehicles with manual transmission: Step on the clutch when starting the vehicle. A lockout prevents the engine from starting if the clutch is not depressed.◀

STARTING THE ENGINE

Do not let the engine warm up with the vehicle at a standstill. Move off immediately at a moderate engine speed.◀

Do not allow the engine to run in enclosed spaces. Breathing the noxious exhaust gases can lead to unconsciousness and death. The exhaust gases contain carbon monoxide, an odorless and colorless, but highly toxic gas.
Do not leave the vehicle unattended with the engine running. This is a safety hazard.
When driving, standing at idle, and parking the vehicle, take care to avoid contact between the hot exhaust system and flammable materials, e.g. hay, grass, leaves, etc. Such contact could lead to a fire resulting in serious personal injury and property damage.◀

Online Edition for Part-No. 01 41 0 157 644 - © 09/03 BMW AG

Starting

When starting the engine, do not press the accelerator pedal.

Do not actuate the starter for too short a time. Do not turn it for more than approx. 20 seconds. Release the ignition key immediately when the engine starts.
Extended starting attempts, characterized by excessively frequent or long periods with the starter engaged, can lead to damage in the catalytic converter.◀

If the engine does not start on the first attempt, for instance if the engine is very hot or cold:

When starting the engine, press the gas pedal down halfway.

When first starting the engine at very low temperatures, from +5 °F / –15 °C:

When starting the engine, press the gas pedal down halfway. For the initial start attempt, allow the starter to remain engaged somewhat longer, approx. 10 seconds.

Manual transmission

1. Engage the parking brake
2. Put the manual gearshift lever in neutral
3. Press the clutch pedal
4. Start the engine.

Move the gearshift lever to neutral position and engage the parking brake before leaving your vehicle with the engine running.
Do not leave the vehicle unattended with the engine running. This is a safety hazard.◀

Continuously Variable automatic Transmission (CVT)

1. Press the footbrake
2. Put the selector lever in position P or N
3. Start the engine.

Move the selector lever to position P and engage the parking brake before leaving your vehicle with the engine running.
Do not leave the vehicle unattended with the engine running. This is a safety hazard.◀

Online Edition for Part-No. 01 41 0 157 644 - © 09/03 BMW AG

SWITCHING OFF THE ENGINE

You should never remove the ignition key when the vehicle is in motion, as the steering lock could engage.
When you leave the vehicle, always remove the ignition key and engage the steering lock.
When you park on downward slopes, engage the parking brake.◀

Manual transmission

Turn the ignition key to position 1 or 0.

Continuously Variable automatic Transmission (CVT)

Engage selector lever position P, turn the ignition key to position 1 or 0.

PARKING BRAKE

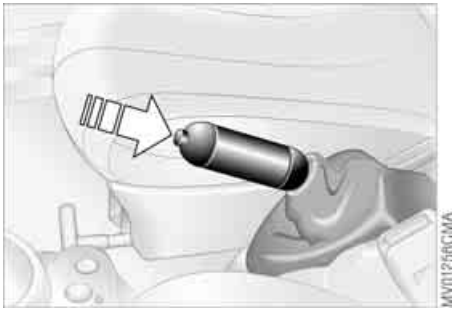

The parking brake is designed primarily to prevent the vehicle from rolling when it is parked. It operates against the rear wheels.

To engage

Lever automatically locks in position.
The indicator lamp in the instrument cluster lights up from ignition key position 2, refer to page 16.

To release

1. Pull up slightly
2. Press the button
3. Push the lever downwards.

If, in exceptional circumstances, it should be necessary to engage the parking brake while the vehicle is in motion, do not pull the lever with excessive pressure. Keep your thumb pressed against the release button while carefully pulling the lever up to apply moderate pressure. Excessive pressure can lead to overbraking and loss of traction, i.e. fishtailing, at the rear axle. The brake lamps do not come on when the parking brake is engaged.
Vehicles with manual transmission:
Always engage the parking brake when parking on hills and inclined surfaces, as first gear or reverse may not provide adequate resistance to rolling.
Vehicles with CVT:
Place the selector lever in P.◀

To avoid corrosion and one-sided braking, apply the parking brake lightly from time to time when coasting to a standstill, for instance at a traffic light, provided that it is safe to do so.◀

Online Edition for Part-No. 01 41 0 157 644 - © 09/03 BMW AG

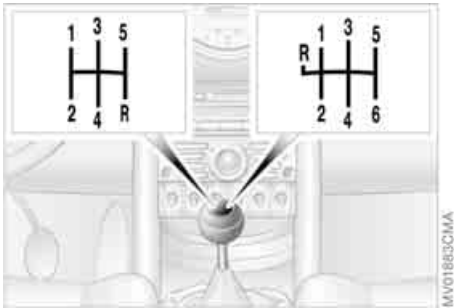

6-speed transmission*

When changing gear in the 5th/6th gear plane, press the gearshift lever to the right to prevent inadvertently shifting to a gear of the 3rd/4th gear plane.◀

Reverse gear

Before selecting reverse gear, ensure the vehicle is stationary; then, fully depress the clutch pedal and pause briefly before moving the gearshift lever into position.

5-speed transmission:
Press the gearshift lever to the right and to the back.

6-speed transmission:
Press the gearshift lever towards the left. Thereby overcome the slight resistance and press forward.

As you do this, the backup lamps will turn on automatically when the ignition key is in position 2.

Do not hold the vehicle in place on slopes by slipping or 'riding' the clutch. Use the parking brake instead. Riding the clutch causes the clutch assembly to wear out sooner.◀

Online Edition for Part-No. 01 41 0 157 644 - © 09/03 BMW AG

CONTINUOUSLY VARIABLE AUTOMATIC TRANSMISSION (CVT)*

You can drive with a continuously variable shifting CVT. In addition, you can also shift manually.

When in manual selection mode, you have the option of changing gears by using either the selector lever or the shift paddles on the steering wheel.

Under normal operating conditions, fuel consumption is lowest when driving in position D.

Selector lever positions

P R N D M/S + –

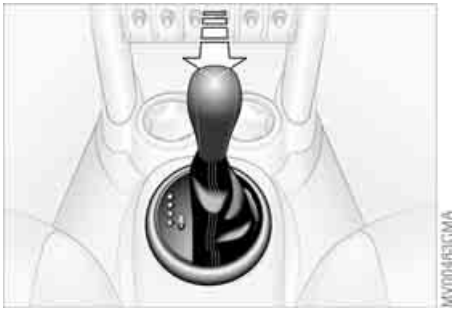

Range selection

Inadvertent engaging of certain selector lever positions is prevented by a lock.

Press the button on the front side of the selector lever knob. The lock is released.

While the vehicle is stationary, and before shifting out of P or N, press the brake pedal in order to disengage the selector lever lock mechanism, shiftlock.
If the engine speed is too high when the vehicle is at a standstill, the selector lever is also blocked to protect the transmission. Hold the brake pedal down until starting off. Otherwise the vehicle will 'creep' when a drive position is engaged.◀

To prevent the vehicle from starting off on its own, always move the selector lever to position P and engage the parking brake before getting out of your vehicle with the engine running.
Do not leave the vehicle unattended with the engine running. This is a safety hazard.◀

If the selector lever is not placed in position P when the vehicle is parked, the position display of the selector lever stays on. This can lead to battery discharge.◀

Online Edition for Part-No. 01 41 0 157 644 - © 09/03 BMW AG

P Park

Select P only when the vehicle is completely stopped. The transmission locks to prevent the rear wheels from turning.

R Reverse

Select P only when the vehicle is completely stopped.

N Neutral: idle

Select N only if your journey is interrupted for a long period.

D Drive: CVT driving position

This position is designed for driving under all normal operating conditions.

Kickdown

In 'kickdown' mode, you achieve maximum acceleration and maximum speed in position D.
Press the accelerator pedal past the increased resistance point at the full-throttle position.

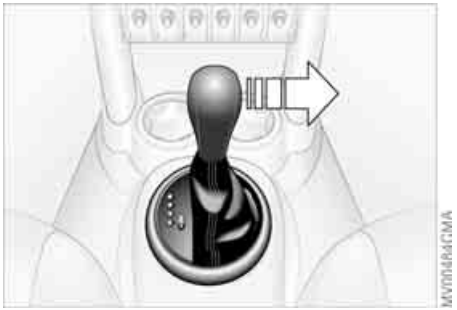

M/S + – Manual mode and Sport program

Switch from D into M/S + –:
Activates the Sport program and displays SD in the gear indicator in the speedometer.

Press selector lever once:

Shifts from the Sport program to the manual mode.

Shifting with the selector lever

▷ Press selector lever briefly towards +:
Transmission shifts upwards
▷ Press selector lever briefly towards –:
Transmission shifts back.

1 to 6 appear in the gear indicator.

Shifting on the steering wheel*

The shift paddles allow the gears to be changed rapidly and, above all, safely, since both hands can remain on the steering wheel.

Use one of the two shift paddles to shift upwards or downwards:

▷ Pull shift paddle toward body:
Transmission shifts upwards
▷ Push shift paddle away from body:
Transmission shifts back.

1 to 6 appear in the gear indicator.

The transmission will only execute upshifts or downshifts that will result in a plausible combination of vehicle speed and engine rpm, e.g. downshifts that would result in excessive engine speed are not executed.

Online Edition for Part-No. 01 41 0 157 644 - © 09/03 BMW AG

In order to accelerate rapidly in the M/S + – Manual mode and in the Sport program, e.g. when passing, shift downwards manually or by kickdown.◀

Whenever you want to return to automatic shifting, just move the selector lever toward the left to position D.

Switching from M/S + – Manual mode into the selector lever positions P, R and N is only possible via D.

Available displays

P R N D SD 1 2 3 4 5 6 EP

Electronic transmission control module

If there is a malfunction in the transmission system, EP appears in the display.

All selector lever positions can still be selected. In positions for driving forward: the vehicle can now only be driven with a limited gear selection.

Avoid high engine loads. Please proceed to the nearest MINI Dealer.◀

Do not work in the engine compartment when a drive gear – forward or reverse – is engaged. If you do this, the vehicle could move.◀

Jump-starting and towing, refer to pages 126, 128.◀

Online Edition for Part-No. 01 41 0 157 644 - © 09/03 BMW AG

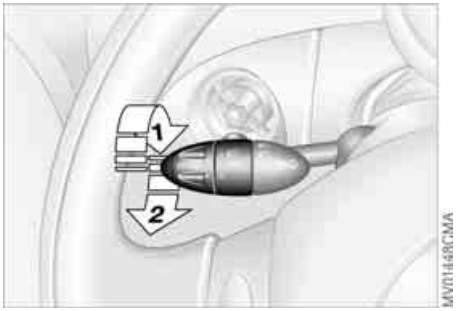

Switching on the parking lamps

Turn to the first position. The front, rear and side vehicle lighting is switched on. Parking light on one side, refer to following column.

Switching on the low beams

Turn to the second position. With the low beams on and with the ignition switched off, only the parking lamps will remain on.

'Follow me home' lamps

If you activate the headlamp flasher after having switched off the engine and the lights, the low beams will stay lit for a preset period of time.

You can have this function set by your MINI Dealer.◀

Standing lamps, left or right

For parking, you can activate lights on one side of the vehicle. Observe local laws.

1. Turn the ignition key to position 0 or remove the key
2. Switch on the low beams
3. Move the lever to the adequate turn signal indicator position.

'Lights on' warning

If the lights have not been switched off and the ignition key is in position 0, an acoustic signal sounds for a few seconds when you open the driver's door to remind you that the lights have not been switched off.

Daytime driving lamps*

If you desire, the light switch can be left in position 2.
When the ignition is switched off, the car's exterior lights go out.

The automatic headlamp range control for xenon lamps only operates with the light switch in position 1 or 2.◀

You can have the daytime driving lamp function activated/deactivated by your MINI Dealer.◀

Online Edition for Part-No. 01 41 0 157 644 - © 09/03 BMW AG

SIGNAL/HEADLAMP FLASHER

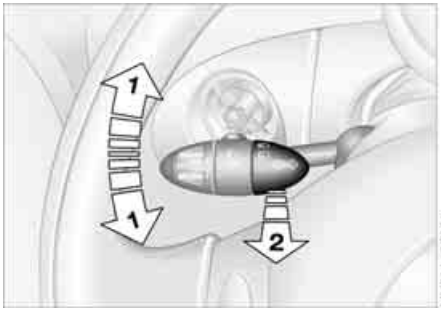

1 Turn signal indicator:
Green indicator lamps and periodic clicking sound from the relay

2 High beams/Headlamp flasher:
Blue indicator lamp

To signal briefly

Press the lever up to but not beyond the point of resistance.

▷ If the blinking of the indicator lamp and the clicking from the relay are both faster than normal: one of the turn signal indicators has failed.◀

INSTRUMENT LIGHTING

To control the instrument lighting, press the button.

To increase the illumination intensity

Keep the button pressed until the desired brightness is reached.

To decrease the illumination intensity

Press the button briefly.
With each brief pressing of the button, the illumination intensity is reduced in steps.

FOG LAMPS

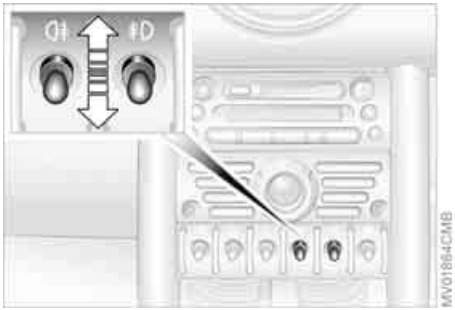

When the parking lamps/low beams are switched on:
Briefly press the switch upwards or downwards.

Briefly press once again to switch off.

Fog lamps*

Fog lamps switched on:
Green light-emitting diode in the switch lights up.

Rear fog lamp*

Rear fog lamp switched on:
Yellow light-emitting diode in the switch lights up.

Observe all legal regulations concerning the use of fog lamps.

Online Edition for Part-No. 01 41 0 157 644 - © 09/03 BMW AG

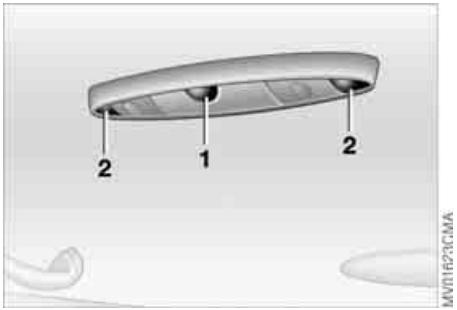

The interior light is controlled automatically.

Switching the interior lamps on and off manually

Press button 1 briefly.

Permanently turn off interior light:

Press button 1 until the interior light comes on briefly.

To reverse this condition, repeat the procedure.

Footwell and cargo area lamps

These lamps are controlled in the same way as the interior light.

Switching the reading lamps on and off

Press button 2.

Light-emitting diodes (LEDs)

Light-emitting diodes installed behind translucent lenses serve as the light sources for many of the controls and displays in your vehicle. These light-emitting diodes are related to conventional lasers, and legislation defines them as light-emitting diodes, Class 1.

⚠ Do not remove the protective lens and avoid staring directly at the unfiltered beam for several hours, as inflammation of the retina could result.◀

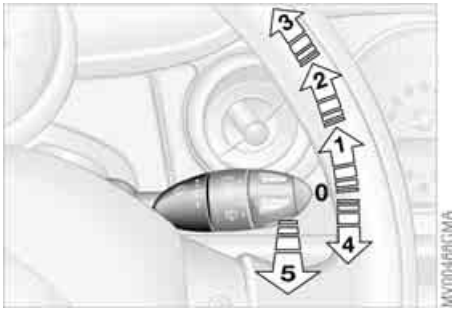

0 Wipers parked
1 Intermittent operation or rain sensor
2 Normal wiper speed
3 Fast wiper speed
4 Brief wipe
5 Clean windshield and headlamps

Intermittent operation

Not on vehicles with rain sensor.

The interval time for the wipers is dependent on the vehicle speed.

Rain sensor*

The rain sensor is located on the windshield, directly in front of the interior rearview mirror.
When the rain sensor is activated, the

Online Edition for Part-No. 01 41 0 157 644 - © 09/03 BMW AG

windshield wipers are automatically controlled depending on the amount of moisture, including snow, on the windshield.

To activate the rain sensor:

From ignition key position 1:

Lever in position 1.
The wipers move over the windshield once.

To deactivate the rain sensor:

Put lever in position 0.

Switch the rain sensor off when passing through an automatic car wash. Failure to do so could result in damage caused by undesired wiper activation.◀

Normal wiper speed

When the vehicle is stationary, the wipers switch automatically to intermittent wiping.

You can have this function activated/deactivated by your MINI Dealer.◀

Fast wiper speed

When the vehicle is stationary, the wipers switch automatically to normal wiper speed.

You can have this function activated/deactivated by your MINI Dealer.◀

Cleaning windshield and headlamps*

The system sprays washer fluid against the windshield. The wipers are automatically activated for a brief period.

When the vehicle lighting is on, the headlamps are also cleaned at appropriate intervals.

Do not use the washers if there is any danger that the fluid will freeze on the windshield. For this reason, use an antifreeze agent, refer to page 98
Do not use the washers when the reservoir is empty, since this could cause damage to the washing pump.◀

Heated windshield washer jets*

The windshield washer jets are heated automatically when the ignition key is in position 2.

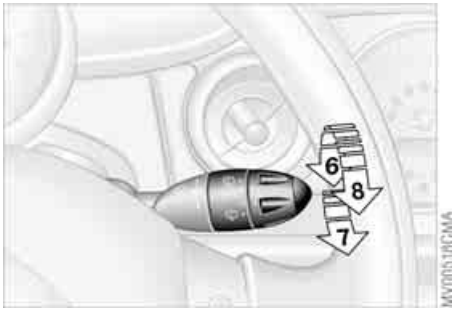

Rear window wiper

6 Intermittent operation:
Turn the cap to position 6.
The rear window wiper moves across the window a number of times before switching to intermittent operation

Cleaning rear window

7 Intermittent operation:
Turn the cap to position 7 and hold in place

8 In lever position 0:
Turn the cap to position 8 and hold in place

Online Edition for Part-No. 01 41 0 157 644 - © 09/03 BMW AG

On the multifunction steering wheel and sports steering wheel

The vehicle maintains and stores any desired speed when driving above approx. 20 mph / 30 km/h. Vehicles with manual transmission must be driving in 3rd gear or higher.

Do not use cruise control on twisting roads, when high traffic density prevents driving at a constant speed, or when the road surface does not permit driving at a constant speed, e.g. due to snow, rain, ice, loose surfaces.◀

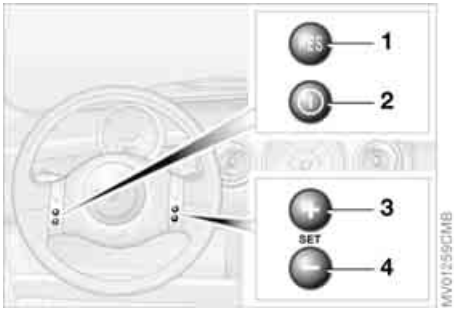

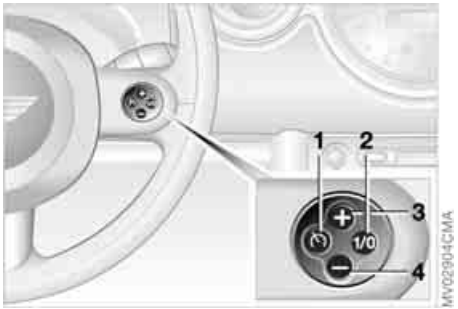

To activate via the multifunction steering wheel

From ignition key position 1:

Press button 2.

The indicator lamp in the instrument cluster lights up.
Cruise control is active.

To activate via the sports steering wheel

1. Start the engine
2. Press button 2.

The indicator lamp in the instrument cluster lights up.
Cruise control is active.

To deactivate

Press button 2 repeatedly until the indicator lamp goes out.

The cruise control is deactivated when the ignition key is turned to position 0.

The stored speed is cleared.

Online Edition for Part-No. 01 41 0 157 644 - © 09/03 BMW AG

To maintain and store speed or to accelerate

Press button 3.

The system maintains and stores the current vehicle speed. Every time you tap the button, the speed increases by approx. 1 mph / 2 km/h.

Press and hold button 3.

The vehicle accelerates without pressure on the accelerator pedal. When you release the button, the system maintains and stores the current speed.

▷ If, on a downhill gradient, the engine braking effect is not sufficient, the controlled speed may be exceeded. Speed can drop on uphill grades if the engine output is insufficient.◀

To decelerate

Press button 4.

If you are already driving with active cruise control, the speed is decreased by approx. 1 mph / 2 km/h every time you briefly tap the button.

Press and hold button 4.

With the cruise control active, the system automatically reduces the throttle opening to slow the vehicle. When you release the button, the system maintains and stores the current speed.

To cancel the cruise control

The cruise control is automatically canceled:

▷ When the brakes are applied
▷ When the clutch pedal is depressed
▷ If the cruise speed is either exceeded or not met for an extended length of time, for example if you press the accelerator pedal and exceed the stored speed.

The indicator lamp stays lit.
You can use the cruise control again as required.

On the multifunction steering wheel, the cruise control can be interrupted manually:

When the system is activated, press button 2.

To continue cruise control

Press button 1.

The vehicle accelerates to and maintains the last speed stored.

Online Edition for Part-No. 01 41 0 157 644 - © 09/03 BMW AG

ODOMETER

1 Trip odometer

To set to zero:

With ignition key in position 1, press button 3 until the trip odometer is at zero.

2 Odometer

You can activate the displays shown in the illustration, with the ignition key in position 0, by pressing button 3 in the display elements.

TACHOMETER

Do not operate the engine with the needle in the red overspeed zone of the gauge.

To protect the engine, the power is reduced when you approach a certain engine speed in this sector.

FUEL GAUGE

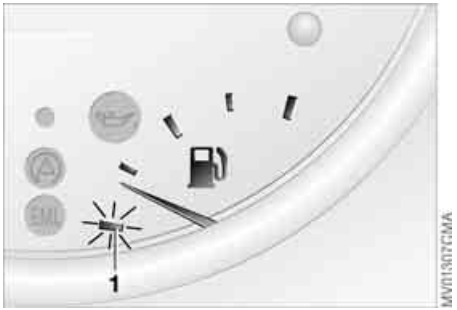

In the speedometer

If the indicator light 1 begins to be lit continuously, there are approx. 2.1 gallons / 8 liters of fuel in the tank.
Fuel tank capacity:
approx. 13.2 gallons / 50 liters.

When you switch on the ignition, the indicator lamp lights up briefly to confirm that the system is operational.

If the angle of the vehicle varies, for example when you are driving in mountainous areas, the needle may fluctuate slightly.

⚠ Refill the gas tank early. If you drive to the last drop of fuel, engine functions are not guaranteed and damage can occur.◀

Online Edition for Part-No. 01 41 0 157 644 - © 09/03 BMW AG

FUEL GAUGE

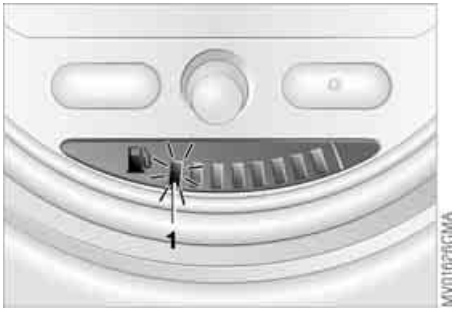

In the navigation system

Please also comply with the instructions in the previous section.◀

If the indicator light 1 changes from orange to red, there are approx. 2.1 gallons / 8 liters of fuel in the tank.

COOLANT TEMPERATURE GAUGE

Low temperature

The needle is at the bottom or on the right of the range.

The engine is still cold. Drive at moderate engine and vehicle speeds.

Center position

Normal operating temperature of the engine.

High temperature

As soon as there is a deviation from the center position upwards or to the left:

Drive moderately and at low engine speed. If necessary, switch off the engine and allow it to cool down.

Checking coolant level, refer to page 100.

1 Red indicator lamp

When you switch on the ignition, warning lamp 1 comes on briefly to confirm that the system is operational.

Lights up while driving:
Engine is too hot. Switch off the engine immediately and allow it to cool down.

Navigation system option

Coolant temperature warning lamp in the speedometer lights up while driving:
Engine is too hot. Switch off the engine immediately and allow it to cool down.

Online Edition for Part-No. 01 41 0 157 644 - © 09/03 BMW AG

SERVICE INTERVAL DISPLAY

Remaining distance for service

The distance remaining before the next scheduled service is displayed in miles / kilometers with the ignition key in position 1 or higher. The display also indicates whether an engine oil service and/or an inspection is due.

The onboard computer bases its calculations of the remaining distance on your driving style in the period immediately preceding your data request. The remaining distance display counts backwards in steps of 35 miles / 50 km to the next service. A flashing message and a minus sign in front of the display that again begins counting forwards mean that the service interval has been exceeded.
Please contact your MINI Dealer for an appointment.

The remaining-distance display disappears after approx. 5 seconds and changes to the odometer and trip odometer display.

For more information on the service interval display, refer to page 102.

CLOCK

Settings

From ignition key position 1:

Left button: hours

Right button: minutes.

Move forward in increments:
Press the button

or

fast forward:
Press and hold the button.

Changeover from 24-hour to 12-hour mode:

Press both buttons at the same time for approx. 5 seconds.

Online Edition for Part-No. 01 41 0 157 644 - © 09/03 BMW AG

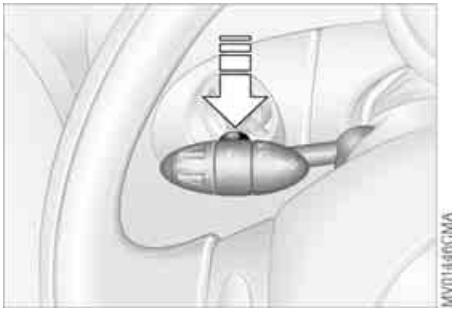

Mode selection

With the ignition key in position 1 and higher, you can use the button in the turn signal indicator lever to retrieve information from the onboard computer for display in the tachometer. By pressing the button briefly, you can call up a new function for display.

The displays appear in the following order: Outside temperature, range, average consumption and current consumption, average speed and current speed.

Starting with ignition key position 1, the last active setting is displayed.

If the vehicle is equipped with a navigation system, you will find more information on the onboard computer in the navigation system Owner's Manual.◀

Outside temperature

If the vehicle is equipped with a tachometer, but not with an onboard computer, the outside temperature is displayed.

You can have the units °C or °F set by your MINI Dealer.◀

Ice warning

If the outside temperature falls below approx. 37 °F / +3 °C, the onboard computer automatically switches to the outside temperature display.
In addition, an acoustic signal can be heard and the display flashes for a short time.

The ice warning does not exclude the possibility that surface ice can form at temperatures above 37 °F / +3 °C, e.g. on bridges and shaded roads.◀

With navigation system option:

The temperature is displayed in the status line of the navigation system, refer to the Owner's Manual for the navigation system.

Current vehicle speed

If the vehicle is equipped with a tachometer, but not with an onboard computer, the current vehicle speed is displayed.

With the ignition key in position 1 and higher, you can use the button in the turn signal indicator lever to call this up in the tachometer display. Briefly press the button to switch the display from the outside temperature to the current vehicle speed.

Online Edition for Part-No. 01 41 0 157 644 - © 09/03 BMW AG

Range

The onboard computer bases its calculations for the cruising range on the driving style and on the remaining fuel in the tank.

If the range displayed is less than 35 miles / 50 km, be sure to refuel; otherwise engine functions are not guaranteed and damage could occur.◀

Average speed, average fuel consumption

Press the button in the turn signal indicator lever for a longer period.

The displayed average speed value and consumption value are recalculated.

Any time spent when the vehicle is stationary and the engine is shut off is ignored for the calculation.

You can have an other unit of measurement set by your MINI Dealer.◀

Current fuel consumption

The current consumption value is calculated and displayed on the basis of your driving style.

You can have a different unit of measurement set by your MINI Dealer.◀

Online Edition for Part-No. 01 41 0 157 644 - © 09/03 BMW AG

ALL SEASON TRACTION CONTROL (ASC)*

The concept

This system optimizes driving stability and traction, especially when just starting off, when accelerating or when cornering.

ASC recognizes the danger present in traction loss and will increase driving stability and traction by reducing the engine's output and, if necessary, by applying the brakes to the front wheels.

ASC is operational each time you start the engine. It contains the following functions:

▷ Antilock Brake System (ABS)
▷ Cornering Brake Control (CBC)
▷ Electronic Brake Force Distribution (EBD).

The laws of physics cannot be repealed, even with ASC. An appropriate driving style always remains the responsibility of the driver. Avoid using the additional safety margin provided by the system as an excuse for taking unnecessary risks.
Do not make any modifications to the ASC system. Allow only authorized technicians to perform service procedures on the ASC.◀

Indicator lamp

The indicator lamp in the display elements will go out shortly after the ignition has been switched on, refer to pages 16, 17.

If the indicator lamp flashes:
ASC controls the drive and braking forces.

If the indicator lamp fails to go out after the engine is started, or if it comes on during normal driving and stays on:
The system is defective or was turned off using the button.
The described stabilizing operations are no longer available.
You can, however, drive the vehicle normally without ASC.
In the event of a malfunction, please see your MINI Dealer, refer to pages 16, 17.

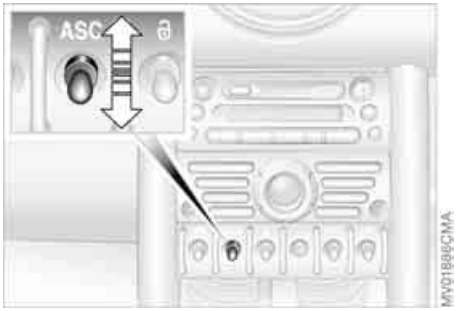

To switch off the ASC

Briefly press the switch.
The indicator lamp stays lit.

When driving with snow chains or to 'rock free' in snow, it can be helpful to switch off the ASC for a brief period.

To maintain vehicle stability, always drive with the ASC switched on whenever possible.◀

To switch the ASC back on

Briefly press the switch once again.
Indicator lamp goes out.

Online Edition for Part-No. 01 41 0 157 644 - © 09/03 BMW AG

DYNAMIC STABILITY CONTROL (DSC)*

The concept

This system optimizes driving stability and traction, especially when just starting off, when accelerating or when cornering. It also maintains driving stability even in critical driving situations.

DSC recognizes unstable vehicle conditions, such as understeering or oversteering, and, as far as is possible within the laws of physics, helps keep the vehicle on a steady course by reducing the rpms and by brake applications to the individual wheels.

The DSC is operational every time you start the engine. It contains the following functions:

▷ All Season traction Control (ASC)
▷ Antilock Brake System (ABS)
▷ Cornering Brake Control (CBC)
▷ Electronic Brake Force Distribution (EBD).

The laws of physics cannot be repealed, even with DSC. An appropriate driving style always remains the responsibility of the driver. Avoid using the additional safety margin provided by the system as an excuse for taking unnecessary risks. Do not make any modifications to the DSC system. Allow only authorized technicians to perform service procedures on the DSC.◀

Indicator lamp

The indicator lamp in the display elements will go out shortly after the ignition has been switched on, refer to pages 16, 17.

If the indicator lamp flashes:
DSC controls the drive and braking forces.

If the indicator lamp fails to go out after the engine is started, or if it comes on during normal driving and stays on:
The system is defective or was turned off using the button.
The described stabilizing operations are no longer available.
The vehicle will remain completely operational, however, without DSC.
In the event of a malfunction, please see your MINI Dealer, refer to pages 16, 17.

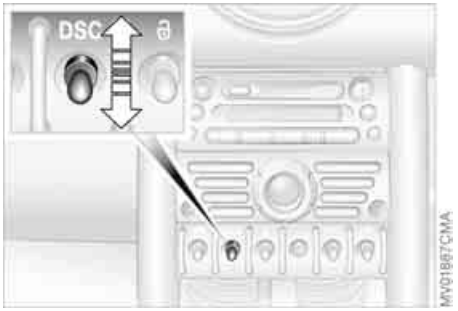

To switch off the DSC

Briefly press the switch.
The indicator lamp stays lit.

When driving with snow chains, it may be effective to switch off the DSC for a brief period.

To maintain stability, always drive with the DSC switched on whenever possible.◀

To switch the DSC back on

Briefly press the switch once again.
Indicator lamp goes out.

Online Edition for Part-No. 01 41 0 157 644 - © 09/03 BMW AG

ANTILOCK BRAKE SYSTEM (ABS)

The concept

The ABS keeps the wheels from locking while braking, thereby enhancing active driving safety.

ABS also includes Electronic Brake Force Distribution (EBD).

Braking with ABS

To achieve optimal performance from ABS when reacting to critical situations, you should apply maximum pressure to the brake pedal – panic stop.

Since the vehicle remains maneuverable, you can still go around any obstacles with the smallest possible steering movements.

Pulsation of the brake pedal in conjunction with the sound of hydraulic regulation indicates to you that you are driving at the limit and reminds you to readapt your vehicle's speed to road surface conditions.

Cornering Brake Control (CBC)

Cornering Brake Control (CBC) is an enhancement of ABS that improves vehicle stability especially when braking during cornering.
When the vehicle is being braked, the rear wheels are relieved from load, and this can cause the vehicle to oversteer in curves. CBC counteracts this by making use of unilateral braking pressure to generate a stabilizing counter torque while braking outside of the ABS control range.

Electronic Brake Force Distribution (EBD)

In order to achieve a short braking distance when the vehicle is fully loaded, your vehicle is equipped with relatively large brakes on the rear axle. EBV continuously monitors the speeds of the rear wheels in relation to the front wheels in order to prevent overbraking of the rear wheels even when the vehicle has a light load. If the rear wheels tend to lock, the EBV controls their slip, ensuring operating stability.

Online Edition for Part-No. 01 41 0 157 644 - © 09/03 BMW AG

FLAT TIRE MONITOR

The concept

As you drive, the Flat Tire Monitor keeps track of the tire inflation pressure in all four tires. The system alerts you when there is a substantial pressure loss in one of the tires relative to another.

The tire inflation pressures are monitored based on the speeds of the four wheels in relation to one another. A flat tire is detected as the result of differences in certain speed ratios, and a warning is generated.

System requirements

So that the system can 'familiarize' itself with the correct inflation pressure, please do the following:

1. Check the tire inflation pressure in all tires
2. Compare them with the inflation pressure table, refer to page 88, and adjust the pressures if necessary
3. Initializing the system.

System limitations

The Flat Tire Monitor cannot alert you to severe and sudden tire damage caused by external factors, nor does it detect the gradual and minor loss of pressure in all four tires.◀

On the other hand, the following situations could lead to a delayed detection of pressure loss or to the system not functioning:

▷ Driving on snow-covered or slippery roads
▷ Performance-oriented driving: slip at the drive wheels, high rates of lateral acceleration
▷ When driving with snow chains, false warnings and undetected pressure loss may occur
▷ When driving with a space-saver spare tire, the Flat Tire Monitor cannot function.

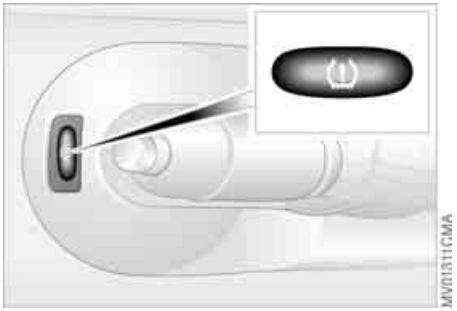

Initializing the system

The system must be re-initialized immediately after changing a tire and wheel, or after correcting the pressure in any tire. This requires a bit of driving.◀

1. Before a journey, start the engine, but do not start driving
2. Press the button long enough for the indicator lamp in the display elements to light up for a few seconds
3. Drive off.

It takes a few minutes before the Flat Tire Monitor can detect a flat tire and issue an alert.

Do not initialize the system if you are driving with snow chains or a space-saver spare tire.◀

Online Edition for Part-No. 01 41 0 157 644 - © 09/03 BMW AG

Flat tire

Indicator lamp:

The indicator lamp in the display elements flashes. In addition, an acoustic signal sounds.

1. Reduce speed and stop the vehicle with caution. Avoid hard brake applications and steering maneuvers
2. Determine which tire is damaged

   If this cannot be determined, contact your MINI Dealer.◀

3. Replace the damaged tire, refer to Changing tires on page 117, or repair the flat tire using the MINI Moblity System, refer to page 121.

Vehicles with Run Flat tires:

1. Reduce vehicle speed carefully to under 50 mph / 80 km/h. Avoid hard brake applications and steering maneuvers. Do not exceed a speed of 50 mph / 80 km/h

   Since Run Flat tires are reinforced on the flanks, it is usually not possible to detect a loss of pressure from the outside, refer to Run Flat tires on page 93.◀

2. To continue driving, follow the instructions on driving with damaged tires on page 93.

System malfunction

Indicator lamp:

The symbol in the instrument cluster lights up. The Flat Tire Monitor is malfunctioning or out of order.

Please contact your MINI Dealer.

Online Edition for Part-No. 01 41 0 157 644 - © 09/03 BMW AG

PARK DISTANCE CONTROL (PDC)*

The concept

The PDC assists you when you back into a parking space. A signal tone tells you the current distance to an object behind your vehicle. To do this, four ultrasonic sensors in the rear bumper measure the distance to the nearest object.
The sensors on each side have a range of approx. 2 ft / 60 cm, the middle sensors one of approx. 5 ft / 1.5 m.

PDC is a parking aid that can identify objects if they are approached slowly, as is generally the case when parking.
Avoid driving towards objects rapidly; due to underlying physical principles, the system may otherwise alert you too late for you to take evasive steps.◀

Automatic function

With the ignition key in position 2, the system starts to operate automatically about one second after you select reverse gear or place the selector lever in position R.

Wait for this one second before you drive backwards.◀

The system is deactivated when you shift away from Reverse.

You can have a signal tone set by your MINI Dealer as a confirmation that PDC has been activated.◀

Acoustical signals

The distance to an object is indicated by a tone sounding at intervals. As the distance between vehicle and object decreases, the intervals between the tones become shorter. A continuous tone indicates the presence of an object less than 8 in / 20 cm away.

The warning signal is canceled after approx. three seconds if the distance to the object remains constant during this time, for instance if you are moving parallel to a wall.

Malfunction

System malfunctions will be indicated by a continuous high-pitched tone when the system is activated the first time. Please have your MINI Dealer resolve the problem.

Volume control

The volume of the Park Distance Control signal can be adjusted from level 1, soft, to level 6, loud.

The volume can be set by your MINI Dealer.◀

System limitations

Even with PDC, final responsibility for estimating the distance between the vehicle and any objects always remains with the driver.
Even when sensors are involved, there is a blind spot in which objects cannot be detected. Recognition of some objects can be beyond the limits of physical ultrasonic measurement, for example with towing bars or hitches or with thin or wedge-shaped objects. Moreover, low objects that have already been detected, such as a curb edge, can disappear out of the range of the sensors before a continuous tone sounds.
Loud sources of sound outside and inside your vehicle can drown the PDC signal tone.◀

Keep the sensors clean and free of ice or snow in order to ensure that they will continue to operate effectively.
Do not apply high pressure spray to the sensors for a prolonged period of time.
Always maintain a distance which is greater than 4 in / 10 cm.◀

Online Edition for Part-No. 01 41 0 157 644 - © 09/03 BMW AG

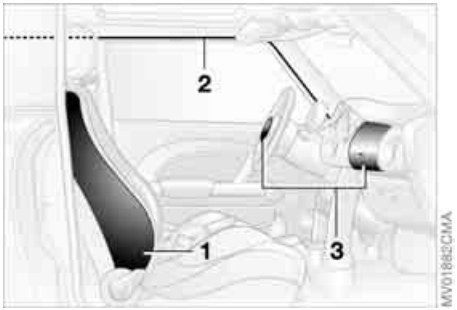

1 Side airbags in seatback on the driver and passenger side: front

2 Head airbags on the driver and passenger sides for both rows of seats: front/rear

3 Front airbags on the driver and passenger sides

Protective effect

The front airbags supplement the safety belts by providing additional protection for the driver and front passenger in the event of a frontal collision in which the protection afforded by the belts alone may no longer be sufficient.
When needed, the head and side airbags help to furnish protection in the event of side impact.

Each of the side airbags is designed to help support the seat occupant's upper body.

The airbags are designed to not be triggered in certain types of collisions, e.g. in minor accidents, certain kinds of vehicle rollover and rear impact.

For information on the ideal seating position, refer to page 31.

Do not apply adhesive materials to the cover panels of the airbags, cover them or modify them in any other way. Do not fit covers, cushions or other items to the front seats that have not been specially approved for seats with side airbags. Do not hang clothing, e.g. jackets, over the backrests.
Do not attempt to remove the airbag restraint system from the vehicle. Do not make any changes yourself to the individual components and wiring. This includes the padded covers of the steering wheel, instrument panel and roof supports, as well as the sides of the roofliner and the original backrest covers on the front seats. Do not attempt to remove or dismantle the steering wheel.
Do not touch the individual components directly after the system has been triggered, as otherwise there is a danger of burns. In the event of malfunctions, immobilization or use, i.e. triggering, of the airbag restraint system in accordance with its intended function, please commission a MINI Dealer with the inspection, repair or disassembly. Unprofessional attempts to service the system could lead to failure in an emergency or undesired airbag activation, either of which could result in personal injury. In view of the applicable safety regulations, please arrange for your MINI Dealer to dispose of the airbag generators.◀

Airbag warning information is also provided on the sun visors.

Indicator lamp

The indicator lamp in the display elements shows the status of the entire airbag system and the seat belt tensioners starting from ignition key position 1.

System operational:

▷ The indicator lamp comes on briefly.

System malfunction:

▷ The indicator lamp does not come on starting from ignition key position 1
▷ The indicator lamp stays lit
▷ The indicator lamp lights up while driving.

Online Edition for Part-No. 01 41 0 157 644 - © 09/03 BMW AG

A system malfunction could prevent the airbags from deploying in response to a severe impact occurring within the system's normal triggering range. Please have the airbag system checked as soon as possible by your MINI Dealer.◀

Online Edition for Part-No. 01 41 0 157 644 - © 09/03 BMW AG

AIR CONDITIONING SYSTEM*

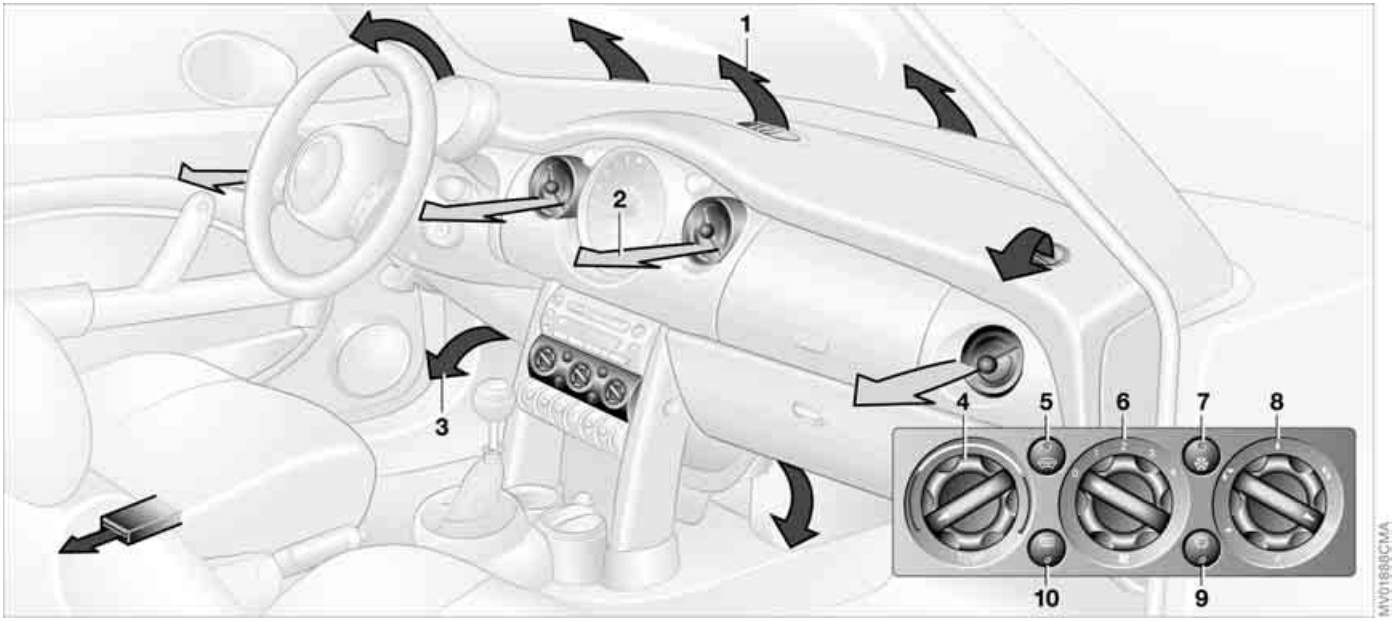

1 Air onto the windshield and onto the side windows
2 Air for the upper body area 69
3 Air for the front and rear footwells
4 Temperature 68
5 Windshield heating 68
6 Blower for air supply 68
7 Air conditioning 68
8 Air distribution 68
9 Recirculated air mode 68
10 Rear window defroster 68

Online Edition for Part-No. 01 41 0 157 644 - © 09/03 BMW AG

Air supply

You can select blower speeds from 1 to 4. Position 0: fan is turned off. The button for recirculated air mode fully blocks the supply of air from outside.

Heating and ventilation operate as of position 1.

Temperature

Turn to the right, red, to increase the temperature of the passenger compartment.

Rapid heating: turn to the extreme right. Then select a pleasant interior temperature.

Air distribution

Air distribution in upper body region ➔, upper body region and footwell ➔↓, footwell ↓, footwell and windows ↑↓, and windows.

All intermediate positions are possible, refer to illustration and overview on page 67.

Rear window defroster

Rear window defroster switched on:
Indicator lamp lights up.

As long as the indicator lamp is lit, the heating operates at high power output: rapid defrosting.

Indicator lamp goes out.
The heating continues to run with reduced power output and then switches itself off automatically.

Windshield heating*

Windshield heating switched on:
Indicator lamp lights up.
As long as the indicator lamp is lit, the heating operates at high power output: rapid defrosting.

Indicator lamp goes out.
The heating continues to run with reduced power output and then switches itself off automatically.

Air conditioning

Air conditioner switched on: indicator lamp lights up.
The air is cooled and dehumidified and – depending on the temperature setting – rewarmed.
Condensation on the windows is reduced when the air conditioning is turned on.

When the air conditioner is operating, condensation is formed which then exits under the vehicle. Traces of condensed water on the ground are therefore normal.◀

Recirculated air mode

Supply of outside air into the vehicle is blocked:
Indicator lamp lights up.
The air within the vehicle is recirculated.

Do not run the recirculated air mode over a longer period of time, as the air quality in the vehicle's interior will otherwise diminish.◀

If the windows fog up in the recirculated air mode, turn the recirculated air mode off and if necessary increase the air supply.◀

Online Edition for Part-No. 01 41 0 157 644 - © 09/03 BMW AG

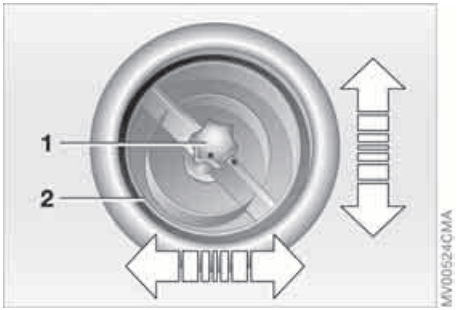

Microfilter*

The microfilter removes dust and pollen from the incoming or recirculated air.

Your MINI Dealer will replace it during routine maintenance. A substantial reduction in the air supply indicates that the filter must be replaced before scheduled maintenance.

Draft-free ventilation

Air supply for the upper body area:

Button 1: air outlets can be opened and closed by turning.
The points indicate the position in each case.

Nozzle 2: change the direction of the airflow by swiveling.

Defrosting and demisting windows

1. Set the rotary blower speed control for the airflow rate to position 4
2. Turn the rotary temperature control completely to the right, red
3. Rotary switch for air distribution in position .
   Condensation is removed from the windows more quickly by activating the air conditioning
4. To defrost the rear window: switch on the rear window defroster and, if required, the windshield heating.

Online Edition for Part-No. 01 41 0 157 644 - © 09/03 BMW AG

AUTOMATIC CLIMATE CONTROL*

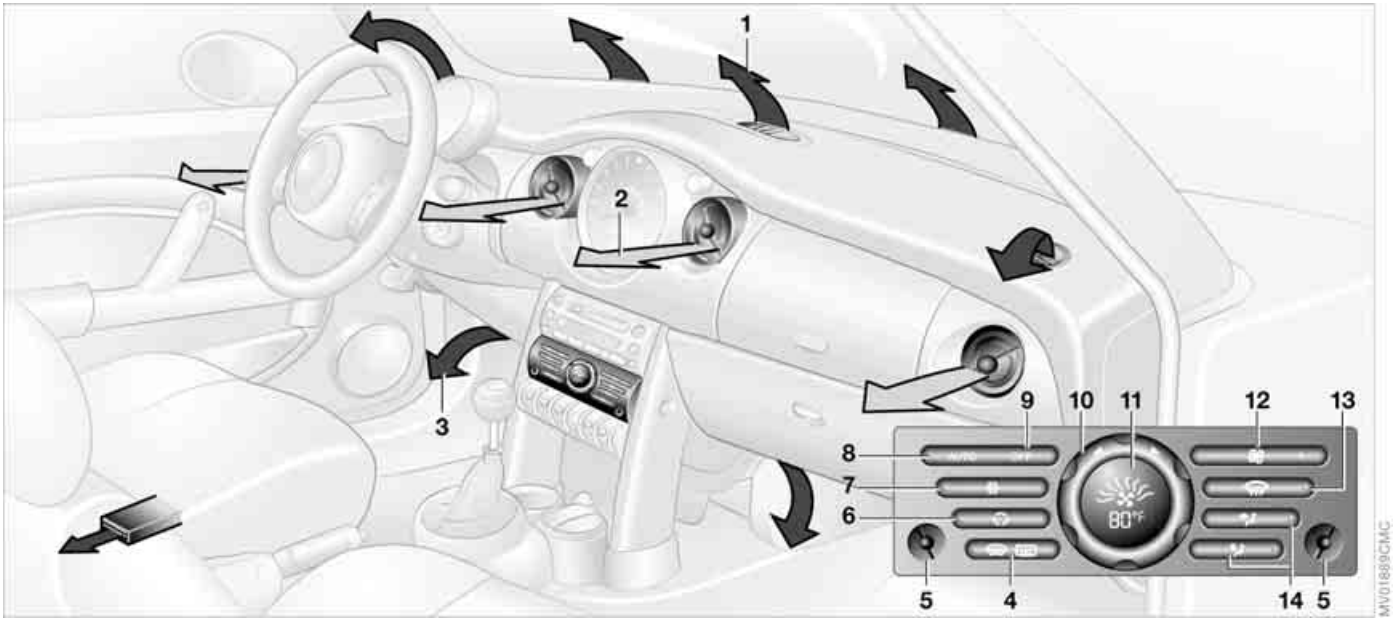

1 Air onto the windshield and onto the side windows

2 Air for the upper body area 72

3 Air for the front and rear footwells

4 Rear window defroster and windshield heating 71

5 Interior temperature sensor, please keep clear and unobstructed

6 Recirculated air mode 71

7 Air conditioning 71

8 Automatic air distribution and supply 71

9 Switching the automatic climate control on/off 71

10 Temperature 71

11 Display for temperature and air supply 71

12 Blower for air supply 72

13 Defrosting and demisting the windshield and side windows 72

14 Individual air distribution 72

Online Edition for Part-No. 01 41 0 157 644 - © 09/03 BMW AG

Automatic air distribution and supply

AUTO Automatic program (AUTO): Indicator lamp lights up.
Automatic adjustment of the air distribution and supply, and adaptation of the specified temperatures to external influences, i.e. outside temperature and sunlight.

In the automatic program (AUTO), the air conditioner is activated automatically.

You can change the unit from °C to °F by keeping extended pressure on the button.◀

Switching the automatic climate control on/off

OFF The blower, heating and air conditioner are switched off.

To switch the automatic climate control on again: Press any button of the automatic climate control.

Air conditioning

Air conditioner switched on: indicator lamp lights up.
The air is cooled and dehumidified and – depending on the temperature setting – rewarmed.

In the automatic program (AUTO), the air conditioner is activated automatically. Condensation on the windows is reduced when the air conditioning is turned on.

Condensation forms in the air conditioning system during operation, and then exits under the vehicle. Traces of condensed water on the ground are therefore normal.◀

Recirculated air mode

Supply of outside air into the vehicle is blocked: indicator lamp lights up.
The air within the vehicle is recirculated.

In the automatic program (AUTO) in hot weather conditions, the recirculated air mode is activated temporarily to enable faster cooling.

Do not run the recirculated air mode over a longer period of time, as the air quality in the vehicle's interior will otherwise diminish.◀

If the windows fog up in the recirculated air mode, turn the recirculated air mode off and if necessary increase the air supply.◀

Rear window defroster and windshield heating*

Rear window defroster and windshield heating switched on: Indicator lamp lights up.
As long as the indicator lamp is lit, the heating operates at high power output – rapid defrosting.

Indicator lamp goes out.
The heating continues to run with reduced power output and then switches itself off automatically.

Temperature

Setting the temperature: Move or turn the wheel in the appropriate direction to increase the temperature step by step.

The figures in the display provide a general indication of interior temperature. When you start the vehicle, the system ensures that the selected temperature is achieved as quickly as possible and then maintained.

Permanent heating with maximum power output at temperature selection HI. Permanent cooling at LO.◀

Online Edition for Part-No. 01 41 0 157 644 - © 09/03 BMW AG

Air supply

Press the left or right half of the button: the air supply varies.

Defrosting and demisting windows

Press the button briefly.
The indicator lamp flashes.

Ice and condensation are rapidly removed from the rear window, windshield and side windows. Condensation is removed from the windows more quickly by activating the air conditioning.

The rear window defroster/windshield heating is switched on automatically. It can be switched off again separately.

Press the button for a longer period.
The indicator lamp stays lit. Permanent air supply to the windshield and side windows. The air supply can be directed both to the windows and to the footwell simultaneously.

The rear window defroster/windshield heating is switched off.

Individual air distribution

Combine the air distribution yourself. This switches off the automatic program.

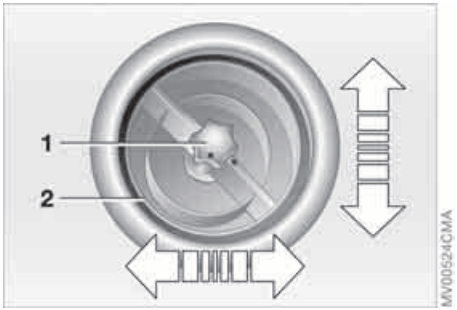

Draft-free ventilation

Air supply for the upper body area:

Button 1: air outlets can be opened and closed by turning.
The points indicate the position in each case.

Vent 2: change the direction of the airflow by swiveling.

Microfilter/activated-charcoal filter

The microfilter removes dust and pollen from the incoming or recirculated air. The activated-charcoal filter provides additional protection by filtering gaseous pollutants from the outside air.
Your MINI Dealer replaces this combined filter as a standard part of your scheduled maintenance. A substantial reduction in the air supply indicates that the filter must be replaced before scheduled maintenance.

Online Edition for Part-No. 01 41 0 157 644 - © 09/03 BMW AG

GLOVE COMPARTMENT

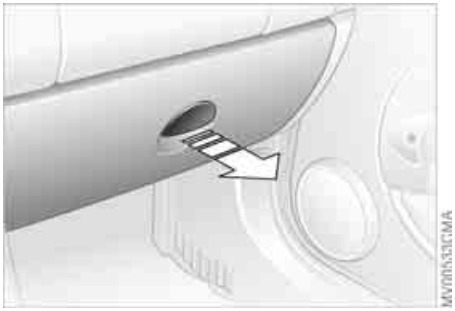

To open:

Pull the handle.
The light goes on.

To close:

Fold the door up.

To prevent injury in the event of an accident, close the glove compartment immediately after use.◀

Ventilation

Turn the rotary switch to a horizontal position:

The vents are open.

Turn the rotary switch to a vertical position, see arrow:

The vents are closed.

Depending on the temperature setting of the air conditioning or the automatic climate control, high temperatures may result in the glove compartment.◀

Online Edition for Part-No. 01 41 0 157 644 - © 09/03 BMW AG

ASHTRAY, DRINKS HOLDERS

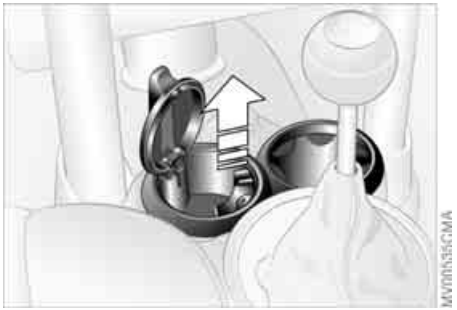

Ashtray

The ashtray is located in one of the beverage holders in the center console.

In the rear, an ashtray can also be fitted in the beverage holder at the end of the center console.

Beverage holders

There are two beverage holders at the front of the center console. Another is located at the end of the center console in the rear.

CIGARETTE LIGHTER, 12 V POWER SUPPLY

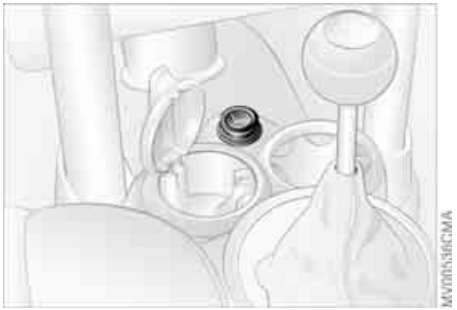

From ignition key position 1:

Press the cigarette lighter in.
Remove as soon as the lighter jumps back out.

⚠ Hold or touch the hot cigarette lighter by the knob only. Holding or touching it in other areas could result in burns.◀

Cigarette lighter socket, 12 V power supply

Suitable for attaching power supplies for flashlights, car vacuum cleaners, etc., up to a rating of approx. 200 watts at 12 volts. Avoid damaging the socket with plugs of different shapes or sizes.

A second 12 V socket is on the left-hand side of the cargo area.

When the vehicle is equipped with a MINI Mobility System, the 12 V socket is also for supplying the compressor.

Online Edition for Part-No. 01 41 0 157 644 - © 09/03 BMW AG

Cargo area cover

When the tailgate is opened, the cargo area cover is also raised.

Never place any heavy or hard objects on the cargo area cover; otherwise occupants could be injured during braking maneuvers.◀

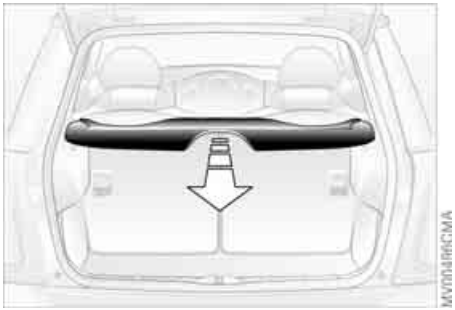

Removal

To load bulky luggage, the compartment cover can be removed.

1. Remove the retaining straps on the tailgate
2. Pull the cargo area cover out towards the rear.

Foldable rear backrest

1. Pull lever
2. Fold the rear backrest forwards.

When folding the backrest back into its original position, always ensure that the catch engages securely. A loose backrest might fail to prevent cargo from entering the passenger compartment during sudden braking or evasive maneuvers, posing a potential hazard to occupants.◀

Online Edition for Part-No. 01 41 0 157 644 - © 09/03 BMW AG

Avoid overloading the vehicle so that the permitted load on the tires is not exceeded. Overloading can lead to overheating and damage inside the tires. Depending on the circumstances, this can result in sudden air loss.◀

Determining cargo limit

1. Locate the following statement on your vehicle's placard:

   The combined weight of occupants and cargo should never exceed XXX kg or YYY lbs, as this could otherwise result in damage to the vehicle and unstable driving conditions.◀

2. Determine the combined weight of the driver and passengers that will be riding in your vehicle
3. Substract the combined weight of the driver and passengers from XXX kilograms or YYY pounds
4. The resulting figure equals the available amount of cargo and luggage load capacity.
   For example, if the XXX amount equals 1,400 lbs. and there will be four 150 lbs. passengers in your vehicle, the amount of available cargo and luggage load capacity is 800 lbs.:
   1,400 lbs. minus 600 lbs. = 800 lbs.
5. Determine the combined weight of luggage and cargo being loaded on the vehicle. That weight may not safely exceed the available cargo and luggage load capacity calculated in Step 4
6. If your vehicle will be towing a trailer, load from your trailer will be transferred to your vehicle. Consult the manual for transporting a trailer to determine how this may reduce the available cargo and luggage load capacity of your vehicle.

Online Edition for Part-No. 01 41 0 157 644 - © 09/03 BMW AG

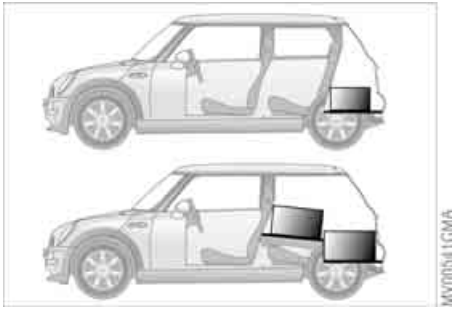

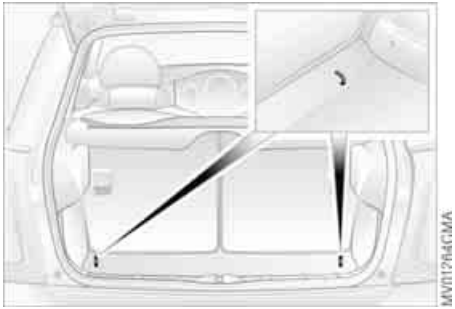

Stowing cargo

▷ Place heavy cargo as far forward as possible, directly behind the backrests, and as low as possible
▷ Cover sharp edges and corners
▷ Do not pile objects higher than the top edge of the backrest

▷ For very heavy cargo when the rear seat is unoccupied, fasten each safety belt in the opposite buckle. This provides additional stabilization for the rear backrests.

Securing the load

▷ Secure smaller and lighter items using the cargo area net* or elastic straps
▷ For large, heavy items, see your MINI Dealer for load-securing devices*. Lashing eyes are provided at the inner corners of the cargo area for attaching these load-securing devices.
Comply with the information enclosed with the load-securing devices.

Online Edition for Part-No. 01 41 0 157 644 - © 09/03 BMW AG

ROOF-MOUNTED LUGGAGE RACK*

Always position and secure the load carefully. If you do not, it can endanger the passengers during braking or evasive maneuvers.
Do not exceed the permissible gross weight and axle load, refer to page 134; otherwise the vehicle's operating safety is no longer assured and it will not be in compliance with the certification regulations.
Do not stow heavy or hard objects in the passenger compartment without first securing them. Otherwise they would be thrown around during braking and evasive maneuvers and endanger the occupants.◀

When loading a roof-mounted luggage rack, ensure that there is sufficient space for the movement of the glass sunroof and that no objects protrude into the swiveling area of the tailgate, as otherwise damage can occur.◀

Do not secure the roof-mounted luggage rack to the trim panels/strips: the lack of a secure hold could lead to damage or accidents.◀

Special roof-mounted luggage racks for your MINI are available as accessories from your MINI Dealer.◀

Online Edition for Part-No. 01 41 0 157 644 - © 09/03 BMW AG

Online Edition for Part-No. 01 41 0 157 644 - © 09/03 BMW AG

Online Edition for Part-No. 01 41 0 157 644 - © 09/03 BMW AG

OVERVIEW

CONTROLS

OPERATION, CARE, MAINTENANCE

OWNER SERVICE PROCEDURES

TECHNICAL DATA

INDEX

Online Edition for Part-No. 01 41 0 157 644 - © 09/03 BMW AG

BREAK-IN PROCEDURES

To ensure that your vehicle provides maximum economy throughout a long service life, we request that you comply with the following information:

Engine

Up to 1,250 miles / 2,000 km:

- ▷ Drive at various vehicle and engine speeds
- ▷ Do not exceed an engine speed of 4,500 rpm or a vehicle speed of 95 mph / 150 km/h.
- ▷ Absolutely avoid using the full-throttle or kickdown position for the accelerator.

Up to 1,250 miles / 2,000 km:

Engine and road speeds can be gradually increased.

You should also comply with these break-in procedures if the engine has to be replaced at a later point.

Tires

Due to technical factors associated with their manufacture, tires do not achieve their full traction potential until after an initial break-in period. Therefore drive carefully during the first 200 miles / 300 km.

Brake system

Approx. 300 miles / 500 km must be driven before the brake pads and rotors achieve the optimum pad-surface and wear patterns required for trouble-free operation and an extended service life.

Clutch

Roughly 300 miles / 500 km must be driven before the clutch starts to operate at optimum efficiency. Remember to engage the clutch carefully during this initial period.

Online Edition for Part-No. 01 41 0 157 644 - © 09/03 BMW AG

Parking the vehicle

Condensation forms in the air conditioner system during operation, and then exits under the vehicle. Traces of condensed water on the ground are therefore normal.

Brakes

Do not rest your foot on the brake pedal while driving. Even light but consistent pedal pressure can lead to high temperatures, brake wear and possibly even brake failure.◀

Hydroplaning

When driving on wet or slushy roads, reduce road speed. If you do not, a wedge of water can form between tires and road surface. This phenomenon is characterized by a partial or complete loss of contact between the tires and the road surface. The ultimate results are loss of steering and braking control.◀

Driving through water

Do not drive through water on the road if it is deeper than 1 ft / 30 cm, and then only at walking speed at the most. Otherwise, the vehicle's engine, the electrical systems and the transmission may be damaged.◀

Clothes hooks

When suspending clothing from the hooks, ensure that they will not obstruct the driver's vision. Do not hang heavy objects on the hooks. If you do so, they could cause personal injury during braking or evasive maneuvers.◀

High temperatures

High temperatures occur in any vehicle equipped with a catalytic converter. Do not remove the heat protection plates fitted in the area of the exhaust system and do not apply body-cavity protectant to this area. When driving, standing at idle, and parking the vehicle, take care to avoid contact between the hot exhaust system and flammable materials, e.g. hay, grass, leaves, etc. Such contact could lead to a fire resulting in serious personal injury and property damage.◀

Online Edition for Part-No. 01 41 0 157 644 - © 09/03 BMW AG

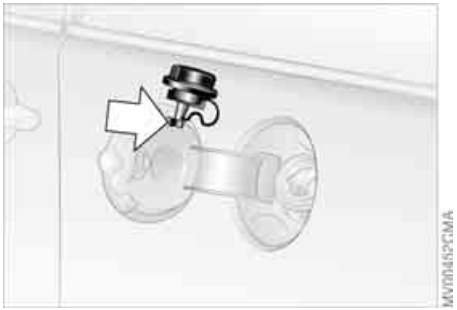

Always switch off the engine before refueling. If you do not, fuel cannot be filled into the tank and the SERVICE ENGINE SOON lamp may come on.◀

1. Open the fuel filler door
2. Turn the gas cap counterclockwise
3. Put the gas cap in the bracket attached to the fuel filler door.

Always observe all applicable precautions and regulations when handling fuels. Never carry spare fuel containers in your vehicle. Whether empty or full, these containers can leak, cause an explosion, and lead to fire in the event of a collision.◀

Unlocking manually

In the event of an electrical malfunction, the gas cap can be unlocked manually.

1. Remove the side trim panel on the left-hand side of the cargo area.
   Remove the first aid pouch
2. Pull the white lever toward the rear.
   The central locking system releases the gas cap
3. Open the fuel filler door.

Simple and environmentally friendly

Always observe all safety precautions posted at the service station when handling fuel.◀

When refueling, insert the filler nozzle completely into the filler pipe. Pulling the nozzle out of the pipe during refueling:

▷ Results in premature pump shutoff
▷ Will reduce the effect of the fuel vapor recovery system on the pump.

As long as the filler nozzle is used properly, the fuel tank is full whenever the nozzle shuts off the first time.

Online Edition for Part-No. 01 41 0 157 644 - © 09/03 BMW AG

REFUELING

Close the tank

1. Put on gas cap
2. Turn gas cap clockwise until it clicks
3. Close fuel filler door.

Fuel tank capacity:
Approx. 13.2 gallons / 50 liters, of which approx. 2.1 gallons / 8 liters are reserve capacity.

Close the gas cap carefully after refuelling until a click is heard.
While closing, be sure not to squeeze the strap which is fastened to the cap.
US models only:
A loose or missing cap will activate the message CHECK GAS CAP in the Check Control* or the Check Gas Cap lamp*.◀

Do not drive until the fuel tank is totally empty. Otherwise engine operations are not guaranteed and damage could occur.◀

FUEL SPECIFICATIONS

The engine uses lead-free gasoline only.

Required fuel:

▷ Premium Unleaded Gasoline,

min. 91 AKI.
AKI = Anti Knock Index.

Do not use leaded fuels. The use of leaded fuels will cause permanent damage to the emissions-control system's oxygen sensor and the catalytic converter.◀

Online Edition for Part-No. 01 41 0 157 644 - © 09/03 BMW AG

Brake fluid level

If the brake fluid level is too low and brake pedal travel has become longer, there may be a defect in one of the brake system's hydraulic circuits.

Proceed to the nearest MINI Dealer. Higher brake application pressure may be necessary under these conditions, there may be a slight pull to one side, and brake pedal travel may be longer. Please remember to adapt your driving style accordingly.◀

Disc brakes

When the vehicle is driven only occasionally, during extended periods when the vehicle is not used at all, and in operating conditions where brake applications are less frequent, there is an increased tendency for corrosion of the brake rotors and accumulation of contamination on the brake pads. This occurs because the minimal pressure that must be exerted by the pads to clean the rotors by brake applications is not reached.

Corrosion on brake rotors is signaled by a running or pulsation during braking; even extended subsequent braking will not cure this phenomenon.

It is a good idea to periodically dry the brakes with a gentle application when driving in rain and on wet roads. Monitor traffic conditions to ensure that this maneuver does not endanger other road users. The resulting heat dries the brake rotor and the brake pads. Then if braking effect is needed, it is immediately available.

Extended or steep mountain descents should be driven in the gear or in the driving position in which only minimal periodic brake application is required. This helps avoid placing excessive loads on the brake system. Stay within the allowable speed range, refer to page 54.

Do not coast with the clutch pressed or with the transmission or selector lever in Neutral. Do not coast with the engine switched off. The engine provides no braking effect when the transmission is in Neutral, and there is no power-assist for braking when the engine is switched off.◀

Brake pads

Brake pad sensors in the left brake pads of the front axle and in the right brake pads of the rear axle monitor the brake pad condition. When the brake pads reach the wear limit, the brake wear warning lights up, refer to page 16.

For your own safety: use brake pads which the manufacturer of your MINI has approved for your particular vehicle model. The manufacturer of your MINI cannot evaluate non-approved brake pads to determine if they are suitable for use, and therefore cannot ensure the operating safety of the vehicle in the event of their use.◀

Online Edition for Part-No. 01 41 0 157 644 - © 09/03 BMW AG

TIRE INFLATION PRESSURE

Information for your safety

It is not merely the tire's service life, but also driving safety and driving comfort that depend on the condition of the tires and the maintenance of the specified tire pressure.

Check tire inflation pressures regularly, including the space-saver spare tire: at least twice a month and before long journeys. Failure to observe this precaution can result in incorrect tire pressures, which cause unstable handling response as well as tire damage, and can ultimately lead to an accident. Do not drive with deflated, i.e. flat, tires except if Run Flat tires are fitted. A flat tire greatly impairs steering and braking response, and can lead to complete loss of control over the vehicle.◀

Checking tire inflation pressures

Check the tire inflation pressures only on cold tires. This means after driving a maximum of 1.25 miles / 2 km or when the vehicle has been parked for at least 2 hours. Warm tires have higher pressures.

After correcting the tire inflation pressure, reinitialize the Flat Tire Monitor, refer to page 62.◀

Tire inflation pressures for original tires

The tire inflation pressures in psi and kilopascal are given on the placard on the B-pillar that is visible when the driver's door is open.

Inflation pressures for other tires

In the following tire pressure table, all pressures are specified in the psi / kilopascal units of pressure and apply to tires at ambient temperature.

In order to determine the correct inflation pressures for your tires, refer to the values for the tire size in question.◀

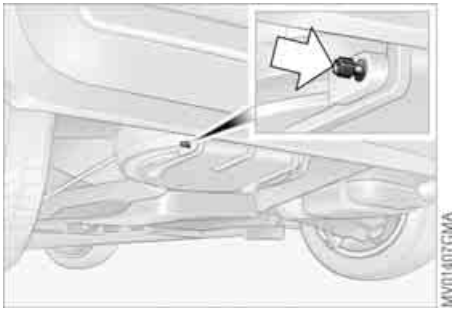

Checking the inflation pressure on the space-saver spare tire

Behind the bumper there is a valve extension accessible from the outside for checking the inflation pressure.

Run Flat tires

Run Flat tires consist of self-contained tires and special rims. The tire reinforcement ensures that the tire offers some residual safety in the event of pressure drop and driving remains possible to a restricted degree, refer to page 93. The vehicle is equipped with Flat Tire Monitor, refer to page 62.

Online Edition for Part-No. 01 41 0 157 644 - © 09/03 BMW AG

TIRE INFLATION PRESSURE

Model	Tires Pressures specified in psi / kilopascal					
MINI COOPER	175/65 R 15 84 H 175/65 R 15 84 Q M+S	30 / 210	35 / 240		35 / 240	35 / 240
	195/55 R 16 87 H 195/55 R 16 87 H M+S 205/45 R 17 84 V 205/45 R 17 84 V M+S	30 / 210	30 / 210		35 / 240	35 / 240
	175/65 R 15 84 Q M+S 175/60 R 15 82 Q M+S 195/55 R 16 87 Q M+S 205/45 R 17 84 Q M+S	33 / 230	33 / 230		38 / 260	38 / 260
	Space-saver spare tire T 115/70 R 15 90 M	61 / 420	61 / 420		61 / 420	61 / 420
MINI COOPER S	195/55 R 16 87 V 195/55 R 16 87 V M+S	30 / 210	30 / 210		35 / 240	35 / 240
	205/45 R 17 84 V 205/45 R 17 84 Q M+S 205/45 R 17 84 V M+S 195/55 R 16 87 Q M+S	33 / 230	33 / 230		38 / 260	38 / 260
	175/60 R 16 82 Q M+S	36 / 250	36 / 250		41 / 280	41 / 280

All-season tires, M+S, should be inflated to the same pressures as summer tires. Figures as stated here apply to the manufacturer's approved or recommended tires; your MINI Dealer will be happy to provide information on request.

Online Edition for Part-No. 01 41 0 157 644 - © 09/03 BMW AG

TIRE CODING

Knowing the tire code on the tire's sidewall makes it easier for you to choose and identify the correct tires.

Tire size

e.g. 205/45 R 17 84 V

- Nominal width in mm
- Cross-sectional ratio in %
- Radial belt construction
- Rim diameter in inches
- Load index, not on ZR tires
- Speed code letter, in front of the R on ZR tires

Speed code letters:

Q = bis 105 mph / 160 km/h

T = up to 118 mph / 190 km/h

H = up to 131 mph / 210 km/h

V = up to 150 mph / 240 km/h

W= up to 167 mph / 270 km/h

Tire Identification Number

Tires with DOT codes meet the guidelines of the U.S. Department of Transportation.

DOT code:

e.g. DOT xxxx xxx 3603

- Manufacturer's code for tire make
- Tire size and tire version
- Tire age

Tire age

The manufacturer of your MINI recommends replacing all tires, including the space-saver spare tire, regardless of actual wear, after 6 years at the latest.

The date on which the tire was manufactured is indicated by the code on the sidewall:
DOT ... 3603 indicates that the tire was manufactured in Week 36 of the year 2003.

Uniform Tire Quality Grading

Quality grades can be found where applicable on the tire sidewall between tread shoulder and maximum section width.
For example:

DOT quality grades

Treadwear 200

Traction AA A B C

Temperature A B C

All passenger car tires must conform to Federal Safety Requirements in addition to these grades.◀

Tread wear

The tread wear grade is a comparative rating based on the wear rate of the tire when tested under controlled conditions on a specified government test course.

For example, a tire graded 150 would wear one and one-half, 1 ½ times as well on the government course as a tire graded 100. The relative performance of tires depends upon the actual conditions of their use, however, and may depart significantly from the norm due to variations in driving habits, service practices and differences in road characteristics and climate.

Online Edition for Part-No. 01 41 0 157 644 - © 09/03 BMW AG

Traction

The traction grades, from highest to lowest, are AA, A, B, and C.

Those grades represent the tire's ability to stop on wet pavement as measured under controlled conditions on specified government test surfaces of asphalt and concrete. A tire marked C may have poor traction performance.

The traction grade assigned to this tire is based on straight-ahead braking traction tests, and does not include acceleration, cornering, hydroplaning, or peak traction characteristics.◀

Temperature

The temperature grades are A, the highest, B and C, representing the tire's resistance to the generation of heat and its ability to dissipate heat when tested under controlled conditions on a specified indoor laboratory test wheel.

Sustained high temperature can cause the material of the tire to degenerate and reduce tire life, and excessive temperature can lead to a sudden flat tire. The grade C corresponds to a level of performance which all passenger car tires must meet under the Federal Motor Vehicle Safety Standard No. 109. Grades B and A represent higher levels of performance on the laboratory test wheel than the minimum required by law.

The temperature grade for this tire is established for a tire that is properly inflated and not overloaded. Excessive speed, underinflation, or excessive loading, either separately or in combination, can cause heat buildup and possible tire failure.◀

RSC Run Flat tires

You will recognize Run Flat tires by a circular symbol containing the letters RSC on the side of the tire, refer to page 93.

M+S

Winter and all-season tires.
These have better winter performance properties than summer tires.

Online Edition for Part-No. 01 41 0 157 644 - © 09/03 BMW AG

TIRE CONDITION

Tire tread

Inspect your tires frequently for tread wear, signs of damage and for foreign objects lodged in the tread. Check the tread depth.

The tread depth should not fall below 1/8 in / 3 mm.
Below 1/8 in / 3 mm tread pattern depth, there is an increased risk of hydroplaning, even at relatively moderate speeds and with only small amounts of water on the road.
Below a tread depth of 1/6 in / 4 mm, winter tires display a perceptible decrease in their ability to cope with winter driving conditions, and should be replaced in the interest of safety.

Wear indicators in the tread-groove base, arrow, are spread around the circumference of the tire and are marked on the side wall of the tire with TWI, Tread Wear Indicator. The indicators in the tread indicate at 1/16 in / 1.6 mm tread depth that the legally permitted wear limit has been reached.

Tire damage

Unusual vibrations while driving can indicate tire damage or other damage to the vehicle. This may be caused, for example, by driving over a curb. This is also true for abnormalities in the vehicle's handling characteristics, such as a pronounced tendency to pull to the left or right. Should this occur, respond by immediately reducing your speed. Proceed carefully to the nearest MINI Dealer or professional tire center, or have the vehicle towed there to have its wheels and/or tires inspected or controlled. Tire damage – up to and including blowouts – can endanger the lives of both the vehicle occupants and other road users.◀

Online Edition for Part-No. 01 41 0 157 644 - © 09/03 BMW AG

Unprofessional attempts by laymen to service tires can lead to damage and accidents.
Have this work performed by skilled professionals only. Your MINI Dealer will be glad to assist you with both their expertise and the proper equipment for your vehicle.◀

The correct wheel and tire combination also affects various systems that would otherwise be impaired, e.g. ABS or DSC.

Have the wheels balanced after each tire or wheel replacement.

The manufacturer of your MINI recommends that you avoid using retread tires, as this could impair driving safety. This is due to the possible variations in casing structures and, in some cases, to their extreme age, which can lead to a decrease in their durability.◀

The correct wheels and tires

The manufacturer of your MINI recommends never mounting wheels and tires that have not been specifically approved by the manufacturer for use on your particular model. Although other wheels and tires may theoretically have the same dimensions, variations in factors such as manufacturing tolerances can result in contact between tire and bodywork, ultimately leading to serious accidents. The manufacturer of your MINI cannot evaluate non-approved wheels and tires to determine if they are suited for use, and therefore cannot ensure the operating safety of the vehicle if they are fitted.◀

Recommended tire makes:

To maintain good handling and vehicle response, use only tires of a single tread configuration from a single manufacturer. In the event of a flat tire, remount the previous wheel and tire combination as soon as possible.

Run Flat tires:

If your MINI is equipped with Run Flat tires – refer to Run Flat tires – use only these tires, since no space-saver spare tire may be available in the event of a flat.

Special characteristics of winter tires

The manufacturer of your MINI recommends winter tires for driving in adverse winter road conditions. While all-season tires with the M+S designation provide better winter traction than summer tires, they generally do not achieve the full performance of winter tires.

For mounting winter tires, refer to the descriptions under Tire condition, page 91, and Wheel and tire replacement.

Run Flat tires:

If your MINI is equipped with Run Flat tires – refer to Run Flat tires – use only these tires, since no space-saver spare tire may be available in the event of a flat.

Observing speeds:

Never exceed the maximum speed for which the winter tires are rated. Unprofessional attempts by laymen to service tires can lead to damage and accidents. Have this work performed by skilled professionals only. The technicians at your MINI Dealer will be glad to assist you with the required professional knowledge and specialized equipment.◀

Storage

Store tires in a cool, dry place, protecting them against light whenever possible. Protect the tires against contact with oil, grease and fuel. Do not exceed the maximum tire inflation pressure specified on the tire sidewall.

Online Edition for Part-No. 01 41 0 157 644 - © 09/03 BMW AG

You will recognize Run Flat tires by a circular symbol containing the letters RSC on the side of the tire. Run Flat tires consist of self-contained tires and special rims. The tire reinforcement ensures that driving remains possible to a restricted degree in the event of a pressure drop or even a flat tire.

When mounting or replacing summer Run Flat tires with winter tires, or vice versa, use Run Flat tires again since no space-saver spare tire is available in the event of a flat. In this event, the manufacturer of your MINI recommends consulting your MINI Dealer. Your MINI Dealer has the necessary special equipment and expertise for handling Run Flat tires.◀

Continuing driving with a damaged tire

Depending on the load, you can continue driving with Run Flat tires at a maximum speed of 50 mph / 80 km/h.

If there is a total loss of tire inflation pressure, 0 psi / 0 kPa, or obvious tire damage, you can gauge the mileage for continued driving on the basis of the following indications:

▷ With a light load:
1 to 2 persons without luggage:
approx. 155 miles / 250 km

▷ With a medium load:
2 persons, full cargo area, or
4 persons without luggage:
approx. 95 miles / 150 km

▷ With a full load:
4 persons or more, full cargo:
approx. 30 miles / 50 km.

Drive cautiously. Do not exceed a speed of 50 mph / 80 km/h. In case of tire pressure loss you must expect changes in vehicle handling such as lower track stability during braking, longer braking distances and changes in self-steering properties when close to the handling limit.
For safety reasons, the manufacturer of your MINI recommends not having damaged Run Flat tires repaired. In this case, consult your MINI dealer.◀

Tire change set

Your MINI is additionally equipped with a tire change set. This is located in the MINI COOPER in the cargo area under the floor mat.
In the MINI COOPER S the tire change set is located in a separate bag which is attached to the eyelets on the cargo area floor by means of tie-down straps.

When changing a tire, always observe the safety measures on page 116, and follow the procedure described on page 117 ff.

In case of a flat tire, the tire change set is not needed, since your MINI has Run Flat tires.◀

Online Edition for Part-No. 01 41 0 157 644 - © 09/03 BMW AG

SNOW CHAINS*

Only certain types of snow chains have been tested by the manufacturer of your MINI, classified as road-safe and approved. Contact your MINI Dealer for more details. The manufacturer of your MINI recommends that you use only these approved fine-link snow chains. Their use is only permitted in pairs on the front wheels on winter tires of the following types:

▷ 175/65 R 15 M+S
▷ 175/60 R 16 M+S.

When fitting, comply with the manufacturer's instructions. With chains, do not exceed a speed of 30 mph / 50 km/h.

Do not initialize the Flat Tire Monitor after attaching snow chains to the tires.
When driving with snow chains, it can be helpful to switch off the ASC or DSC for a brief period, refer to pages 59, 60.◀

Online Edition for Part-No. 01 41 0 157 644 - © 09/03 BMW AG

BONNET

Do not attempt to service your vehicle if you do not have the required technical background. Before working in the engine compartment, switch off the engine and allow it to cool down. Before working on the electrical system, always disconnect the battery first. For all work on the vehicle, comply with the appropriate information and instructions. If you are not familiar with the guidelines, the manufacturer of your MINI recommends that you have the service work performed by your MINI Dealer. Otherwise, work improperly carried out on the parts and components can pose a safety hazard for vehicle occupants and other road users.◀

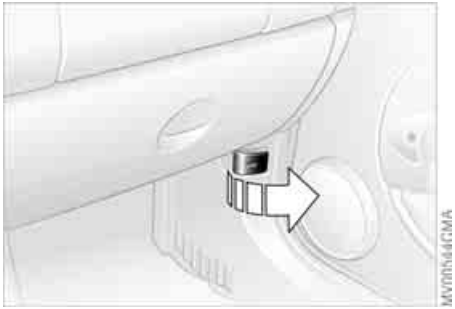

To unlock

Pull the lever in the right door area beneath the instrument panel.

To open

1. Reach under the bonnet
2. Pull the release lever
3. Open the bonnet.

To close

Allow the bonnet to fall from a height of approx. 1 ft / 30 cm.

To avoid injuries, be sure that the travel path of the bonnet is clear when it is closed, as with all closing procedures.
If it is determined that the bonnet is not completely closed while driving, stop immediately and close it securely, also refer to page 16.◀

Online Edition for Part-No. 01 41 0 157 644 - © 09/03 BMW AG

ENGINE COMPARTMENT: MINI COOPER

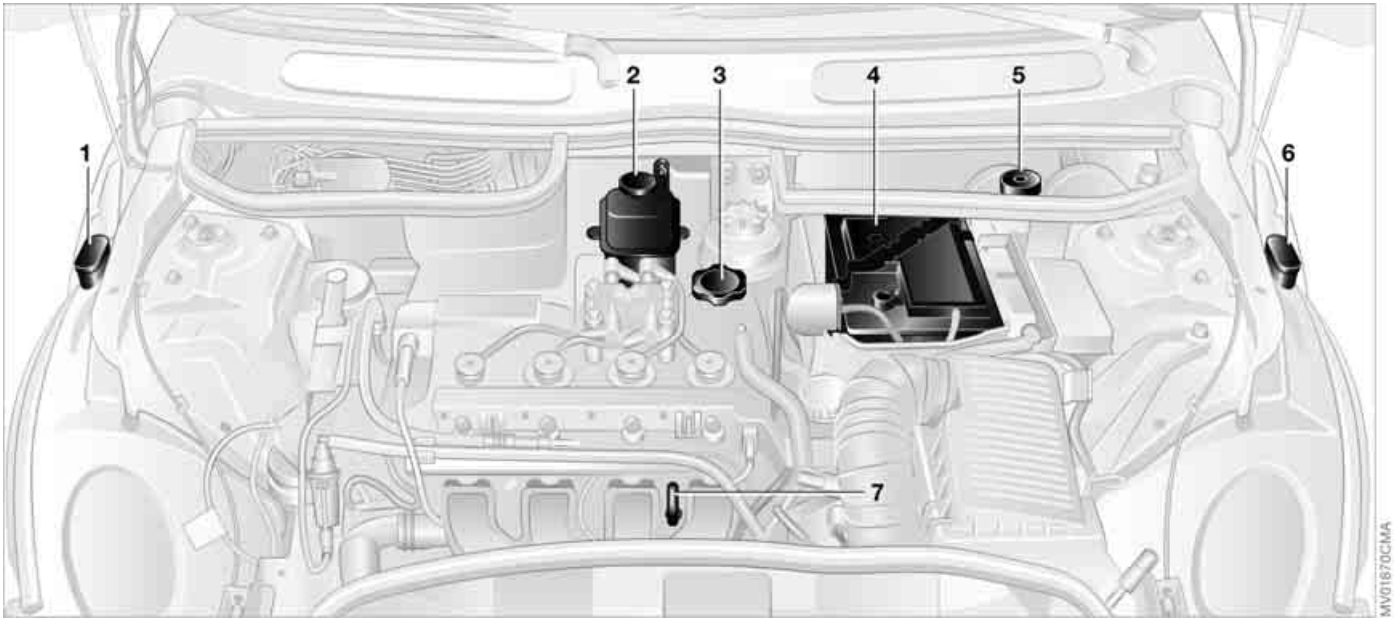

1 Reservoir for windshield washer system 98

2 Coolant expansion tank 100

3 Engine oil filler neck 99

4 Battery 124

5 Brake fluid reservoir 101

6 Reservoir for headlamp cleaning system 98

7 Engine oil dipstick 98

Online Edition for Part-No. 01 41 0 157 644 - © 09/03 BMW AG

ENGINE COMPARTMENT: MINI COOPER S

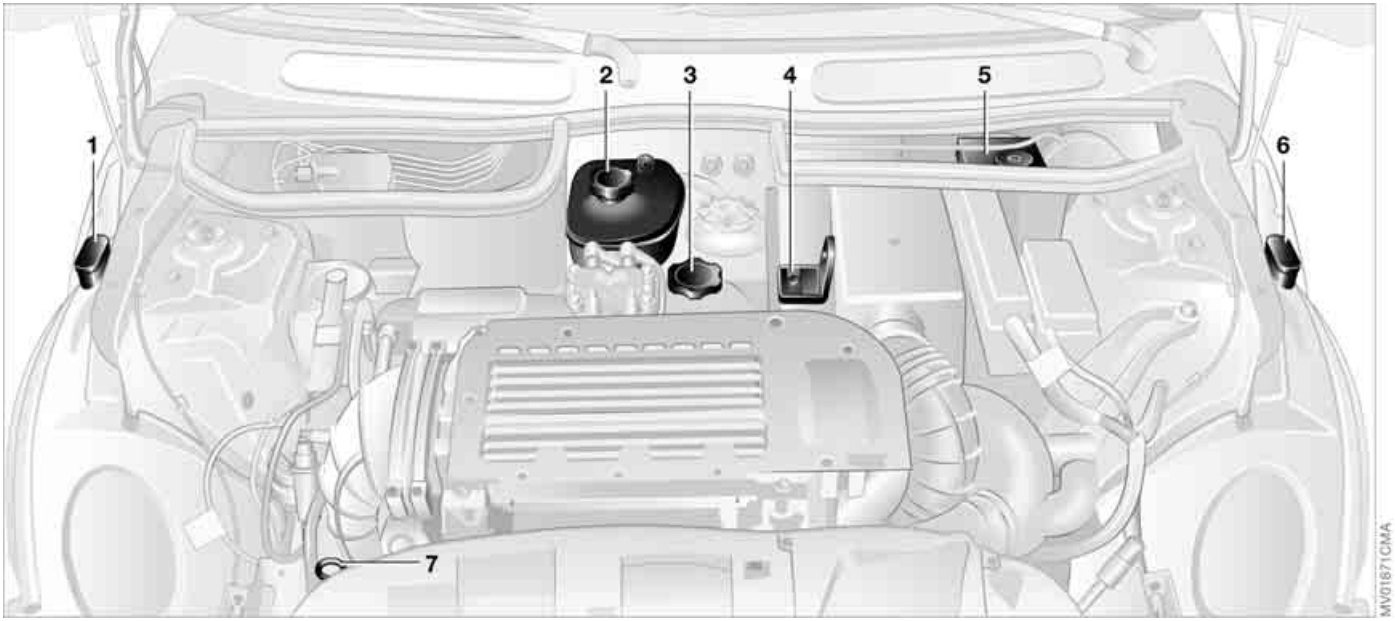

1 Reservoir for windshield washer system 98

2 Coolant expansion tank 100

3 Engine oil filler neck 99

4 Auxiliary terminal for jump-starting 126

5 Brake fluid reservoir 101

6 Reservoir for headlamp cleaning system 98

7 Engine oil dipstick 98

Online Edition for Part-No. 01 41 0 157 644 - © 09/03 BMW AG

WASHER FLUID

Headlamp* and windshield washer system

The capacity of the headlamp washer system is approx. 2.6 quarts / 2.5 liters, that of the windshield washer system approx. 2.1 quarts / 2.0 liters.

Fill with water and, if required, with antifreeze, according to manufacturer's recommendations.

We recommend that you mix the washer fluid before adding it to the reservoir.◀

Antifreeze agent for the washer systems is flammable. Always keep it well away from sparks and open flames, and store it in tightly closed containers well out of the reach of children. Always observe the instructions for use provided on the container.◀

ENGINE OIL

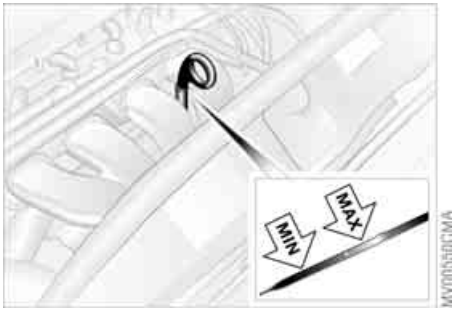

The illustration shows as an example the dipstick of the MINI COOPER.

Measuring the oil level

1. Park the vehicle on a level surface
2. Switch the engine off after it has reached normal operating temperature
3. Pull the dipstick out after approx. 5 minutes and wipe it off with a lint-free cloth, paper towel, or similar material
4. Carefully push the dipstick all the way into the guide tube and pull it out again.

   The oil level must be between the two marks on the dipstick.

As with fuel economy, oil consumption is directly influenced by your driving style and vehicle operating conditions.

The oil volume between the two notches – MIN, MAX – on the dipstick corresponds to approx. 1.1 quarts / 1 liter. Do not fill beyond the upper notch on the dipstick. Excess oil will damage the engine.

Online Edition for Part-No. 01 41 0 157 644 - © 09/03 BMW AG

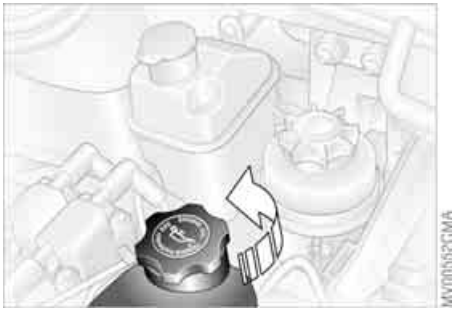

Adding engine oil

Only top up oil when the oil level has dropped to just above the lower notch of the dipstick. However, never allow the level to drop below the lower notch.◀

MINI engines are designed to operate without oil additives; the use of additives could lead to damage in some cases. That is also valid for the Continuously Variable automatic Transmission (CVT), the gear box and the power assisted steering.◀

The manufacturer of your MINI recommends that you have the oil changed at your MINI Dealer.

Continuous exposure to used oil has caused cancer in laboratory testing. For this reason, any skin areas that come into contact with oil should be thoroughly washed with soap and water.
Always store oil, grease, etc., out of reach of children. Comply with all warning labels and information on lubricant containers.◀

Comply with the applicable environmental laws regulating the disposal of used oil.◀

Specified engine oils

The quality of the engine oil selected has critical significance for the operation and service life of an engine. Based on extensive testing, the manufacturer of your MINI approves only certain grades of engine oil.

Use only approved MINI High Performance Synthetic Oil.

If you are unable to obtain MINI High Performance Synthetic Oil, you can add small amounts of synthetic oil in between oil changes. Only use oils with the API SH specification or higher.

Ask your authorized MINI Dealer for details concerning the specific MINI High Performance Synthetic Oil or synthetic oils which have been approved.◀

Viscosities

Viscosity is the oilflow rating as established in SAE classes.

The choice of the proper SAE class depends on the climatic conditions in the area where your MINI is used.

Approved oils are in SAE classes 5W-40 and 5W-30.◀

These oils can be used at all ambient temperatures.

Online Edition for Part-No. 01 41 0 157 644 - © 09/03 BMW AG

COOLANT

Do not add coolant to the cooling system when the engine is hot. Escaping coolant can cause burns.
Antifreeze and anti-corrosion agents are hazardous to health. Always store these agents in tightly-closed original containers kept well away from the reach of children. Antifreeze and anti-corrosion agents are flammable. Therefore, do not spill them over hot engine parts; otherwise they may ignite and cause burns. Always observe the instructions for use provided on the container.◀

Comply with the applicable environmental laws regulating the disposal of antifreeze and anti-corrosion agents.◀

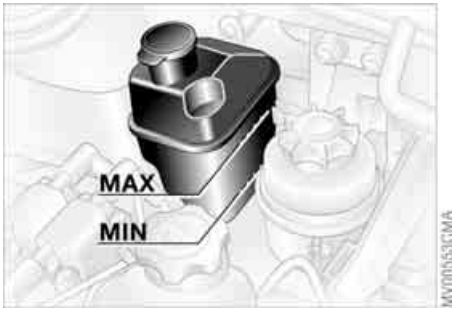

The illustration shows as an example the coolant tank on the MINI COOPER.

Checking coolant level

Correct coolant level with cold engine, approx. 68 °F /20 °C:

Up to the MAX mark of the transparent expansion tank.

Only open the cap of the expansion tank when the engine has cooled down. The needle on the coolant temperature gauge in the display elements must be no higher than in the first quarter; otherwise there is a danger of scalding.◀

To add coolant

MINI COOPER:

1. Slowly open the cap by pulling at the tab to allow accumulated pressure to escape
2. Pull open the cap completely
3. If the coolant is low, slowly add coolant until the correct level is reached; do not overfill.

MINI COOPER S:

1. Open the cap by turning it slightly counterclockwise to allow accumulated pressure to escape
2. Unscrew and open the cap completely
3. If the coolant is low, slowly add coolant until the correct level is reached; do not overfill.

The coolant is made up of water and an antifreeze with corrosion resistance. The mixture ratio of 50 to 50 must be kept the entire year due to the required anti-corrosion property. No other additives are required.

Replace the coolant every four years.

Online Edition for Part-No. 01 41 0 157 644 - © 09/03 BMW AG

BRAKE FLUID

Warning lamp

If the brake warning lamp comes on with the parking brake released:

The brake fluid level is too low, refer to page 15.

Brake warning lamp for Canadian models.

Adding brake fluid

To add brake fluid or to determine and correct the cause of brake fluid loss, please consult your MINI Dealer. Your MINI Dealer is familiar with the specifications for factory-approved brake fluids, DOT 4.

Brake fluid loss may result in extended brake pedal travel. If this occurs, refer to the information on page 86.

Brake fluid is hygroscopic, that is, it absorbs moisture from the air over time.

In order to ensure the brake system's safety and reliability, have the brake fluid changed every two years by a MINI Dealer, also refer to the Service and Warranty Information Booklet for US models or the Warranty and Service Guide Booklet for Canadian models. Brake fluid is toxic and also damages vehicle paintwork. Always store brake fluid in tightly closed original containers kept well away from the reach of children.

Do not spill the brake fluid and do not fill the brake fluid reservoir beyond the MAX mark. The brake fluid could ignite upon contact with hot engine parts and cause serious burns.◀

Comply with the applicable environmental laws regulating the disposal of brake fluid.◀

Online Edition for Part-No. 01 41 0 157 644 - © 09/03 BMW AG

The MINI Maintenance System has been designed as a reliable means of providing maximum driving and operating safety, and as cost-effective for you as possible.

Please bear in mind that regular maintenance is not only necessary for the safety of your vehicle, but also plays a significant role in maintaining the resale value of the vehicle.

Service interval display

While conventional systems specify maintenance according to fixed distances driven, the MINI Maintenance System takes account of the operating conditions of the vehicle, for distances can be driven in many different ways:
60,000 miles / 100,000 km short distance operation can not be equated with 60,000 miles / 100,000 km long distance operation from a maintenance standpoint.

The condition-based MINI Maintenance System includes the Engine Oil Service and Inspections I and II.

Determining the maintenance intervals according to the actual use of the vehicle covers every kind of operating situation. People who drive very little, i.e. much less than 6,000 miles / 10,000 km per year, should have the engine oil changed at least every 2 years since oil deteriorates over time, regardless of use.

For more information on the service interval display, refer to page 56.

Service and Warranty Information Booklet for US models, Warranty and Service Guide Booklet for Canadian models

For additional information on maintenance intervals and procedures, please refer to the Service and Warranty Information Booklet for US models or the Warranty and Service Guide Booklet for Canadian models.

As a precaution against rust, it is advisable to have the body checked for damage from rocks or gravel at the same time, depending upon operating conditions.

▷ Have your vehicle's maintenance and repairs performed at your MINI Dealer. Be sure that all maintenance work is confirmed in the Service and Warranty Information Booklet for US models or the Warranty and Service Guide Booklet for Canadian models. These entries are your proof that the vehicle has received regular maintenance. They are also a requirement for warranty claims.◀

Online Edition for Part-No. 01 41 0 157 644 - © 09/03 BMW AG

Suitable car-care products

Use the cleaning and car-care products available at your MINI Dealer.◀

Washing your vehicle

You can wash your new MINI from the outset in automatic car washes. Preference should be for cloth car washes. If, due to lack of availability, brush car washes must be used, modern systems with soft brushes should be given preference.

When using steam cleaners or high-pressure cleaners, maintain sufficient distance to the vehicle and do not exceed a maximum temperature of 140 °F / 60 °C . If the jet is too close or the pressure is too high, this can lead to damage or initial damage that can develop into more serious damage. Water that enters vehicle components can lead to damage over the long term.◀

After washing the vehicle, apply the brakes briefly to dry them, otherwise water can reduce braking efficiency over the short term and the brake rotors can corrode.◀

Switch the rain sensor off when passing through an automatic car wash, refer to page 50. Failure to do so could result in damage caused by undesired wiper activation.◀

Rod antenna

If necessary, for example before entering a car wash or a garage with elevator ramp, remove the rod antenna. To do so, grip the rod antenna at the base and unscrew it from the antenna foot by turning it to the left.◀

Headlamps

When cleaning the headlamps, please observe the following: do not rub them dry, and never use abrasives or strong solvents. Remove dirt and contamination, such as insects, by soaking with shampoo and then rinsing with plenty of water. Always use a deicer spray to remove accumulated ice and snow; never use a scraper.◀

Vehicle paintwork

Regular care contributes greatly to driving safety and value retention.

Environmental influences varying from one region to the next can affect the vehicle paintwork. Please base the frequency and scope of car care on these various influences.

Care of upholstery

Depressions that come about on the upholstery material of the seats in daily use can be brushed out using a slightly damp brush against the grain.

The fact that velour lays down is not a quality defect, but rather is inevitable in the case of home textiles or clothing materials.

In the case of strong sunlight and longer parking periods, cover the seats or all windows to prevent discoloration.

Online Edition for Part-No. 01 41 0 157 644 - © 09/03 BMW AG

Care of special parts

▷ Light-alloy wheels*:
Use wheel cleaner especially during the winter months, but do not use any aggressive, acidic, strong alkali or rough cleansers or steam jets above 140 °F / 60 °C . Observe the manufacturer's instructions

▷ Chrome parts* such as bonnet grill, door handles, etc.:
Especially if exposed to road salt, carefully clean these parts with plenty of water and possibly with a shampoo additive.
For additional treatment, use chrome polish

▷ Rubber parts:
Treat only with water or rubber care products

⚠ Do not use silicon sprays or other silicon-containing care products, otherwise noise and damage could occur.◀

▷ Plastic parts, imitation leather surfaces, headliner, lamp glass, covering glass for the display elements, as well as matt black molded parts:
Clean with water and, if necessary, plastic care products. Do not dampen seats and the headliner.
Never use solvents such as lacquer thinner, heavy-duty grease remover, fuel or similar

▷ Wood paneling*:
Please clean wood paneling and other wood parts only with a damp cloth. Dry off with a soft cloth

▷ Safety belts:
Only clean using mild soap, leaving the belts fitted.
Do not dry clean, as the fabric can be destroyed.
Always roll up safety belts only when dry. Dirty safety belts prevent unrolling and thus negatively affect safety

▷ Floor carpets and floor mats*:
If heavily soiled, clean using interior cleaner. Floor mats can be removed to allow the interior to be cleaned

▷ Wiper blades:
Clean with soapy water. Replace wiper blades twice a year, before and after the cold season. This is particularly important on vehicles fitted with a rain sensor.

Online Edition for Part-No. 01 41 0 157 644 - © 09/03 BMW AG

Caring for leather* and imitation leather

The leather and imitation leather used by the manufacturer of your MINI are high quality products processed using state-of-the-art methods and will retain their quality level for many years if cared for properly.

Regular cleaning and care are necessary, as dust and road dirt scratch in pores and creases and lead to heavy wear as well as premature brittleness of the leather and imitation leather surface.
This is why you should use a cloth or vacuum cleaner to remove dust on a regular basis.

Since dirt and oil slowly destroy the protective layer of the leather and imitation leather, a treatment with a leather care product is necessary twice a year. This preserves the quality of the leather and prevents electrostatic charging.

⚠ Cleaning agents can contain hazardous or health-damaging substances. For this reason, always observe the warnings on the package. For interior cleaning, always open the doors or windows of the vehicle.
Do not use any products that are not intended for cleaning the vehicle.◀

VEHICLE STORAGE

Your MINI Dealer will be glad to advise you on what is important if the vehicle is to be decommissioned for longer than three months.

Online Edition for Part-No. 01 41 0 157 644 - © 09/03 BMW AG

OBD SOCKET

The Onboard Diagnostic OBD interface socket is located on the left of the driver's side under the instrument panel and under a cover.
The cover has the letters OBD on it.

The purpose of the OBD system is to ensure proper operation of the emission control system for the vehicle's lifetime. The system monitors emission-related components for deterioration and malfunction.

An illuminated lamp informs you of the need for service, not of the need to stop the vehicle.
However, the system should be checked by your MINI Dealer at the earliest possible opportunity.

Indicator lamp for Canadian models.

Under certain conditions, the indicator will blink or flash. This indicates a rather severe level of engine misfire. When this occurs, you should reduce speed and consult the nearest MINI Dealer as soon as possible. Severe engine misfire over only a short period of time can seriously damage emission control components, especially the catalytic converter.

▷ When the gas cap is not properly tightened, the OBD system can detect the vapor leak and the indicator will light up. If the cap is subsequently tightened, the indicator lamp should go out within a few days.◀

Online Edition for Part-No. 01 41 0 157 644 - © 09/03 BMW AG

CALIFORNIA PROPOSITION 65 WARNING

California laws require us to state the following warning:

⚠ Engine exhaust and a wide variety of automobile components and parts, including components found in the interior furnishings in a vehicle, contain or emit chemicals known to the State of California to cause cancer and birth defects and reproductive harm.
In addition, certain fluids contained in vehicles and certain products of component wear contain or emit chemicals known to the State of California to cause cancer and birth defects or other reproductive harm.
Battery posts, terminals and related accessories contain lead and lead compounds. Wash your hands after handling. Used engine oil contains chemicals that have caused cancer in laboratory animals. Always protect your skin by washing thoroughly with soap and water.◀

Online Edition for Part-No. 01 41 0 157 644 - © 09/03 BMW AG

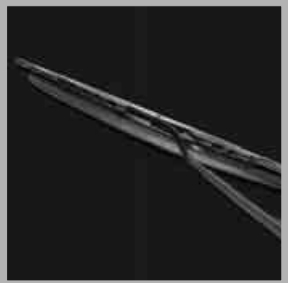

Online Edition for Part-No. 01 41 0 157 644 - © 09/03 BMW AG

OVERVIEW

CONTROLS

OPERATION, CARE, MAINTENANCE

OWNER SERVICE PROCEDURES

TECHNICAL DATA

INDEX

Online Edition for Part-No. 01 41 0 157 644 - © 09/03 BMW AG

The picture shows as an example the tire change set with onboard tools for vehicles with the space-saver spare tire.

Depending on the level of equipment options, your MINI is fitted with a special onboard tool kit stored at the locations described below:

Storage location

MINI Mobility System with tire change set and onboard tools:

▷ In the cargo area under the floor mat.

Tire change set and onboard tools for Run Flat tires:

▷ Tire change set:
In the cargo area in a separate pouch, refer to page 123

▷ Onboard tool kit:
on the left-hand side of the cargo area behind the side trim panel.

Tire change set with space-saver spare tire:

▷ In the cargo area under the floor mat.

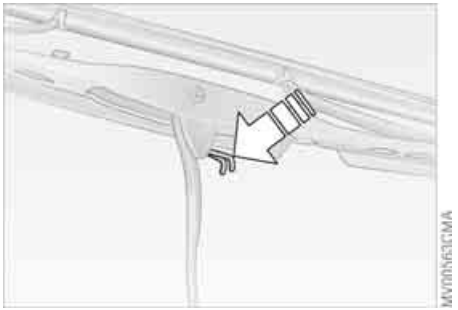

Windshield wiper

1. Rotate the wiper arm completely out from the windshield
2. Set the wiper blade at an angle
3. Press the securing spring, arrow
4. Unhook the wiper blade towards the windshield
5. Pull the wiper blade past the wiper arm toward the top
6. Insert the new wiper blade
7. Press into position until you hear it engage.

Online Edition for Part-No. 01 41 0 157 644 - © 09/03 BMW AG

WIPER BLADES

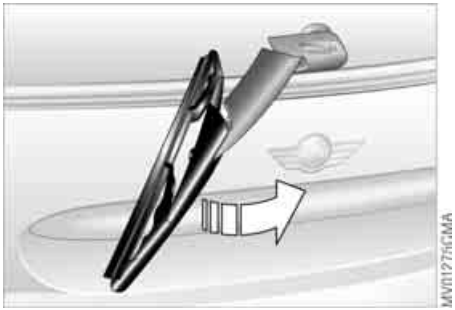

Rear window wiper

1. Rotate the wiper arm completely out from the windshield
2. Turn the wiper blade as far as it will go to the rear, see arrow
3. Press the wiper blade against the limit and thus out of the mounting
4. Press the new wiper blade into the mounting.

LAMPS AND BULBS

Lamps and bulbs are an important component of vehicle safety. Therefore, proceed carefully when handling bulbs. The manufacturer of your MINI recommends that you have such work performed by your MINI Dealer if you are not familiar with the procedures.

Do not touch the glass portion of a new bulb with your bare hands since even small amounts of impurities burn into the surface and reduce the service life of the bulb. Use a clean cloth, paper napkin, or similar material, or hold the bulb by its metallic base.◀

A replacement bulb set is available at your MINI Dealer.

Whenever working on the electrical system, switch off the electrical accessory you are working on or disconnect the cable from the negative terminal of the battery. Failure to do this could result in short circuits.
To prevent injuries and damage, comply with any instructions provided by the bulb manufacturer.◀

Online Edition for Part-No. 01 41 0 157 644 - © 09/03 BMW AG

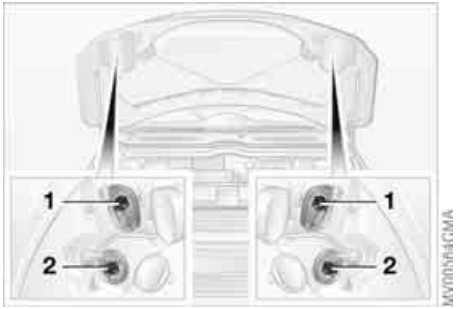

1 Low beams

H7 bulb, 55 Watts

2 High beams

H7 bulb, 55 Watts

The H7 bulb is pressurized. Therefore, wear safety glasses and protective gloves. If the lamp is damaged there is a risk of injury.◀

Replacing bulbs

The headlamps are integrated into the MINI engine compartment.

1. Pull on the tab of the cover of the defective lamp and open it
2. Press the retaining wire lightly at the eyelet and at the same time guide it outwards
3. Fold the retaining wire down
4. Remove the lamp holder and replace the lamp
5. Reinsert the lamp holder in the correct position
6. Fold the retaining wire back up and catch in place.
   Ensure that it is placed in the middle of the wire connector.

Xenon lamps*

The service life of these bulbs is very long and the probability of a failure is very low, provided that they are not switched on and off an unusual number of times. If one of these bulbs should nevertheless fail, it is possible to continue driving with great caution using the fog lamps, provided traffic laws in your area do not prohibit this.

Because of the extremely high voltages involved, any work on the xenon lighting system should be carried out by technically qualified personnel only. Otherwise, there is a risk of fatal injury.◀

Turn signal indicators, front

21 Watt bulb

1. Open the bonnet
2. Reach into the opening for the turn signal indicators from above
3. Apply gentle pressure to the bulb holder while turning it to the left
4. Remove and replace the bulb.

Parking lamps and standing lamps

5 Watt bulb

The parking lamps and standing lamps are integrated in the lamp housing of the turn signal indicator.

1. Turn the bulb holder to the left and pull out
2. Remove and replace the bulb.

Online Edition for Part-No. 01 41 0 157 644 - © 09/03 BMW AG

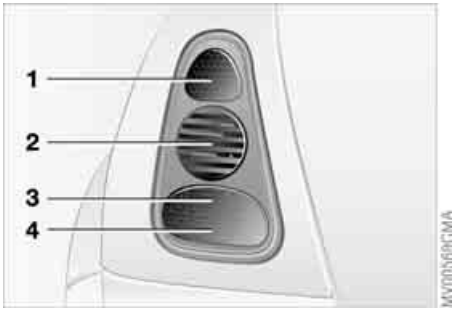

Side turn signal indicators

5 Watt bulb

1. Press lamp toward vehicle tailgate and remove
2. Remove and replace the bulb.

Side marker lamps

3 Watt bulb

Side marker lamps in the wheelhouse paneling of the bumper.

Please contact a MINI Dealer in case of a malfunction.

Fog lamps*

H11 bulb, 55 Watts

Please contact a MINI Dealer in case of a malfunction.

Tail lamps

Rear lamp 3: bulb 21/5 Watts
Other bulbs: 21 Watts

1	Rear fog lamp*	red
2	Turn signal indicator	yellow
3	Rear lamp	red
4	Rear lamp/Brake lamp	red

Online Edition for Part-No. 01 41 0 157 644 - © 09/03 BMW AG

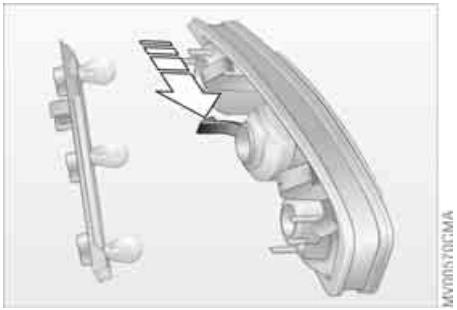

To make this clear, the illustration shows a dismantled tail lamp with the bulb holder removed. All of the bulbs are integrated in the bulb holder.

To reach the bulb holder, remove the cover of the side trim panel in the cargo area.

Replacing bulbs

1. Unplug the power supply
2. Release the bulb holder, arrow, and remove
3. Apply gentle pressure to the bulb while turning it to the left
4. Remove and replace the bulb
5. Plug in the power supply receptacle
6. Press the bulb holder into position until you hear it engage.

Backup lamp

With the space-saver spare tire option:

Access to the lamp via the back or underside of the bumper.

1. Press the clips together
2. Push the lamp out of the bumper
3. Apply gentle pressure to the bulb while turning it to the left
4. Remove and replace the bulb.

Other equipment:

Please contact a MINI Dealer in case of a malfunction.

Center high-mount brake lamp

LED strip on the tailgate.

Please contact a MINI Dealer in case of a malfunction.

Online Edition for Part-No. 01 41 0 157 644 - © 09/03 BMW AG

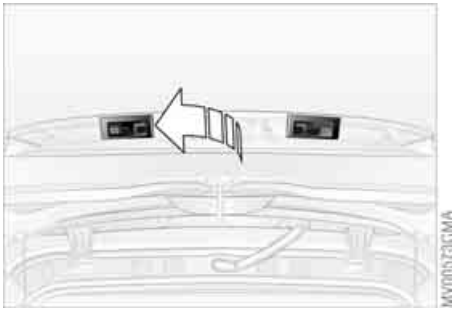

License plate lamps

5 Watt bulb

1. Apply a screwdriver to the recess and lever out the lamp cover
2. Replace the bulb.

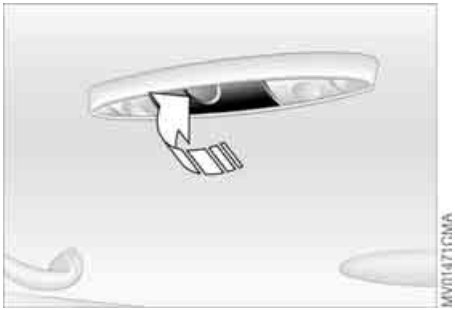

Interior lamps

6 Watt xenon bulb

1. Press out the lamp cover with a screwdriver
2. Remove and replace the bulb.

Reading lamps

2 x 6 Watt xenon bulbs

1. Press out the lamp cover with a screwdriver
2. Unscrew the entire lamp with a screwdriver
3. Remove the bulb from above and replace.

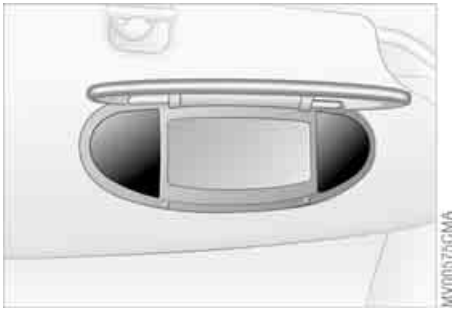

Illuminated vanity mirror

Lamps in the vanity mirror in the sun visor.

Please contact a MINI Dealer in case of a malfunction.

Online Edition for Part-No. 01 41 0 157 644 - © 09/03 BMW AG

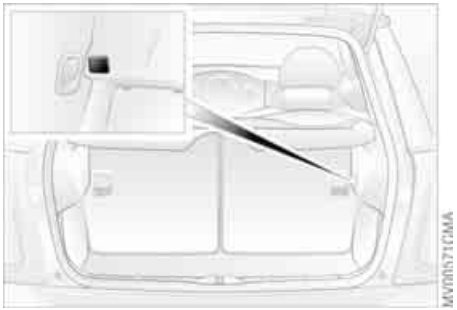

Cargo area lamps

5 Watt bulb

1. Press the lamp cover to the left and out with a screwdriver.
2. Remove and replace the bulb.

Footwell lamps

5 Watt bulb

1. Press out the lamp cover with a screwdriver
2. Remove and replace the bulb.

Glove compartment lamp

5 Watt bulb

1. Press out the lamp cover with a screwdriver
2. Remove and replace the bulb.

Safety measures in the event of a flat tire:
Stop the vehicle as far as possible from passing traffic. Switch on the hazard warning flashers.
Turn the steering wheel to the straight-ahead wheel position and engage the steering lock. Engage the parking brake and shift into 1st or reverse gear – selector lever in P.
All passengers should be outside the vehicle and well away from your immediate working area – behind a guardrail, for instance.
If a portable hazard warning lamp is available, set it up on the roadside at an appropriate distance from the rear of the vehicle.
Comply with all safety guidelines and regulations.◀

In the event of a flat tire, different procedures should be followed depending on the equipment included in your MINI:

▷ Vehicles with Run Flat tires, refer to page 93
▷ Vehicles with a space-saver spare tire, refer to the following section
▷ Vehicles with MINI Mobility System, refer to page 121.

Online Edition for Part-No. 01 41 0 157 644 - © 09/03 BMW AG

CHANGING TIRES: MINI WITH SPACE-SAVER SPARE TIRE*

Additional safety measures in the event of a wheel change:
Change the wheel only on a level, firm surface which is not slippery.
The vehicle or the jack could slip sideways on soft or slippery support surfaces, such as snow, ice, flagstones, etc..
Do not use a wooden block or similar object as a support base for the jack, as this would prevent it from extending to its full support height and reduce its load-carrying capacity.
Do not lie under the vehicle or start the engine when the vehicle is supported by the jack – risk of fatal injury.◀

To change a space-saver tire, proceed as follows:

▷ Remove space-saver spare tire, refer to the section after the next one
▷ Prepare for tire change, refer to page 119
▷ Jack up the vehicle, refer to page 119
▷ Fit the space-saver spare tire, refer to page 120
▷ Tighten the lug bolts, refer to page 120
▷ Drive with space-saver spare tire, refer to page 120.

Tire change set

On vehicles with a space-saver spare tire, the tire change set is stored in the cargo area under the floor mat.

1 Chock, folding
2 Hubcap remover
3 Wheel stud wrench
4 Jack
5 Lug wrench
6 Towing eyelet
7 Lifting handle

The onboard tool kit includes a pouch with a plastic bag in which you can place the damaged wheel.

Removing the space-saver spare tire

The screw connection of the space-saver spare tire is in the cargo area under the floor mat, on the base of the storage compartment for the tire change set.

1. Loosen the screw connection using the wheel lug bolt wrench
2. Take out the cover panel

Online Edition for Part-No. 01 41 0 157 644 - © 09/03 BMW AG

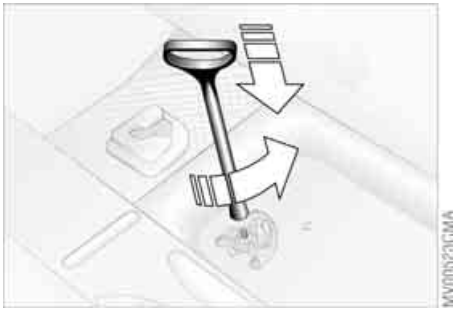

3. Screw the lifting handle from the onboard tool kit onto the thread
4. Raise the lifting handle slightly
5. Squeeze the securing springs
6. The space-saver spare tire is released and must be held by the lifting handle
7. Lower the space-saver spare tire with the lifting handle
8. Unscrew the lifting handle again
9. Pull out the space-saver spare tire towards the rear underneath the vehicle
10. Position the space-saver spare tire with the valve facing upwards
11. Unscrew the valve extension from the valve of the space-saver spare tire
12. Unscrew the dust cap from the extension and attach to the valve on the spare tire.

▷ Due to its different dimensions, the damaged wheel cannot be placed in the recess for the space-saver spare tire.◀

Online Edition for Part-No. 01 41 0 157 644 - © 09/03 BMW AG

Preparing for a tire change

Follow the safety precautions on pages 116 and 117.◀

1. Secure the vehicle to prevent it from rolling:
   Place the folding chock behind the front wheel on the other side of the vehicle; on downward inclines, place it in front of this wheel.
   If the wheel is changed on a surface with a more severe slope, take additional precautions to secure the vehicle from rolling
2. Loosen the lug bolts by a half turn.

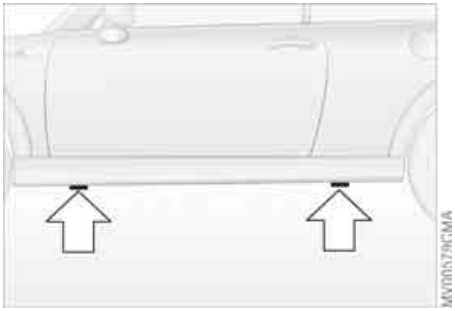

Jacking up the vehicle

1. Place the jack at the jacking point closest to the wheel.
   The jack base must be perpendicular to the surface beneath the jacking point
2. During jacking up, insert the jack head in the square recess of the jacking point
3. Jack the vehicle up until the wheel you are changing is raised from the ground.

The vehicle jack is designed for changing wheels only. Do not attempt to raise another vehicle model with it or to raise any load of any kind. To do so could cause accidents and personal injury.◀

Online Edition for Part-No. 01 41 0 157 644 - © 09/03 BMW AG

Fitting the space-saver spare tire

1. Unscrew the lug bolts and remove the wheel
2. Remove accumulations of mud or dirt from the mounting surfaces of the wheel and hub. Clean the lug bolts
3. Fit the space-saver spare tire
4. Screw at least two lug bolts finger-tight into opposite bolt holes
5. Screw in the remaining bolts
6. Tighten all the lug bolts firmly in a diagonal pattern
7. Lower the vehicle
8. Remove the jack.

Tightening the lug bolts

Tighten the lug bolts in a diagonal pattern.

As soon as possible, have the secure seating of the lug bolts, tightening torque 88.5 lb ft / 120 Nm, checked using a calibrated torque wrench. Otherwise, a wheel coming loose can lead to a severe accident.◀

Replace the defective tire as soon as possible and have the new wheel/tire assembly balanced.

Driving with the space-saver spare tire

Drive cautiously. Do not exceed a speed of 50 mph / 80 km/h.

You must expect changes in vehicle handling such as lower track stability during braking, longer braking distances and changes in self-steering properties when close to the handling limit. These effects are more pronounced when driving with winter tires.

Only one space-saver spare tire may be mounted at one time. Reinstall a wheel and tire of the original size as soon as possible.◀

Check the tire inflation pressure at the earliest opportunity and correct it if necessary.◀

Online Edition for Part-No. 01 41 0 157 644 - © 09/03 BMW AG

MINI MOBILITY SYSTEM*

MINI Mobility System

To repair a flat tire you will find a MINI Mobility System in your MINI. With the help of this system you can apply a liquid sealant on the inside of the tire, which seals the damaged area and enables you to continue to drive.

Preparing for tire repair

⚠ Before using the MINI Mobility System read the warning and danger precautions on the equipment.◀

If possible, leave objects in which have been forced into the tire.

Take off the tag regarding speed limits and stick it onto the steering wheel.

Using the MINI Mobility System

In order to repair a flat tire with the MINI Mobility System, proceed as follows:

▷ Pump in liquid sealant, refer to page 122
▷ Reinflate the tire, refer to page 122
▷ Distribute liquid sealant, refer to page 123
▷ Check tire inflation pressure, refer to page 123
▷ Drive on, refer to page 123.

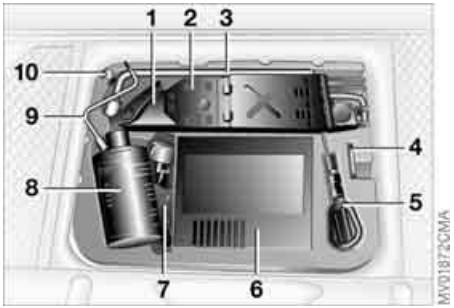

MINI Mobility System with onboard tools

The MINI Mobility System with tire change set and onboard tools is located in the cargo area under the floor mat:

1 Jack
2 Chock, folding
3 Wheel stud wrench
4 Hubcap remover
5 Wrench, screwdriver/Phillips screwdriver, towing eyelet
6 Compressor, hose with manometer and plug for cigarette lighter socket
7 Package with filling hose, valve remover and valve core
8 Filling canister
9 Hex wrench/screwdriver
10 Adapter for wheel lug lock

Online Edition for Part-No. 01 41 0 157 644 - © 09/03 BMW AG

Pumping in liquid sealant

1. Shake the filling canister
2. Screw the filling hose onto the filling canister
3. Unscrew the dust protection cap from the valve of the defective tire
4. Screw out the valve core with the valve remover. The valve remover is located in a package with the filling hose

   Place the valve core and valve remover only on clean surfaces.◀

5. Remove the cap from the filling hose
6. Push the filling hose onto the tire valve
7. Hold the filling canister with the cap down and squeeze.
   Squeeze the entire contents of the canister into the tire
8. Remove filling hose
9. Screw valve core into the tire valve with the valve remover.

In the event of a lost or dirty valve core you will find another valve core in a package with the filling hose.◀

Please remember that the liquid canister must be replaced every four years if the equipment has not been used.◀

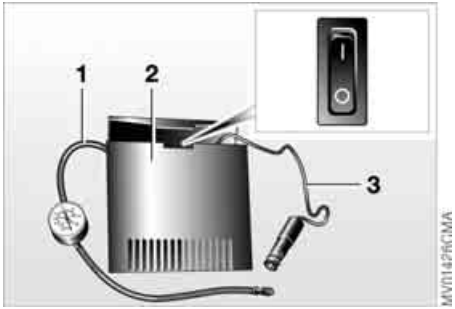

Reinflating the tire

1. Screw hose 1 with manometer onto the tire valve
2. Connect plug 3 to the cigarette lighter socket in the vehicle interior, refer to page 74
3. Ignition key in position 1:
   Turn on compressor 2
4. Inflate the tires to at least 26 psi / 180 kPa, but not to more than 36 psi / 250 kPa.
   To check the current air pressure, shut off the device for a short time

   Do not run the compressor for longer than 6 minutes, otherwise the device will overheat and possibly be damaged.◀

Online Edition for Part-No. 01 41 0 157 644 - © 09/03 BMW AG

If an air pressure of 26 psi / 180 kPa cannot be reached, unscrew the hose 1 and drive back and forth about 33 ft / 10 m so that the liquid sealant is distributed in the tire. Afterwards repeat the procedure.
If an air pressure of 26 psi / 180 kPa is still not reached, the tire is too badly damaged. Please contact the nearest MINI Dealer.◀

5. Turn off compressor 2
6. Unscrew hose 1 from the tire valve
7. Store the MINI Mobility System back in the vehicle.

The instructions for using the MINI Mobility System are also given on the equipment.◀

Distributing liquid sealant

Immediately drive for approx. 10 minutes, so that the liquid sealant is uniformly distributed.

Do not exceed a speed of 40 mph / 60 km/h.
If possible do not drive at a speed lower than 10 mph / 20 km/h.◀

Checking tire inflation pressure

1. After driving for approx. 10 minutes, pull over at a suitable location
2. Screw hose with manometer back onto the tire valve
3. Check tire pressure

The tire inflation pressure must be at least 18 psi / 130 kPa betragen.
If it is not, do not continue driving.◀

If 18 psi / 130 kPa are displayed:

4. Ignition key position 1:
   Turn on compressor 2. Correct the tire inflation pressure to the specified value, refer to the tire inflation pressure table on page 88
5. Replace the tire as soon as possible.

The use of the MINI Mobility System may be ineffective with tire damage larger than approx. 1/6 in / 4 mm. Please contact the nearest MINI Dealer if the tire cannot be made drivable with the MINI Mobility System.◀

Driving on

Do not exceed the permitted maximum speed of 50 mph / 80 km/h; otherwise an accident could happen.◀

Replace the defective tire as soon as possible and have the new wheel/tire assembly balanced.
Have the MINI Mobility System refilled.
Please contact your MINI Dealer.◀

Tire change set

Your MINI is additionally equipped with a tire change set. This is located in the MINI COOPER in the cargo area under the floor mat.

When changing a tire, always observe the safety measures on page 116, and follow the procedure described on page 119 ff.

In case of a flat tire the tire change set is not necessary due to the availability of the MINI Mobility System.◀

Online Edition for Part-No. 01 41 0 157 644 - © 09/03 BMW AG

BATTERY

Location in the MINI COOPER

The battery is located in the engine compartment.

Exact location, refer to page 96.

Location in the MINI COOPER S

The battery is located in the cargo area under the floor mat.

Battery care

The battery is absolutely maintenance-free, that is, the original electrolyte will normally last for the service life of the battery under moderate climatic conditions.

For all questions regarding the battery, please consult your MINI Dealer.◀

Charging the battery

Only charge the battery in the vehicle via the terminals in the engine compartment with the engine switched off, refer to 'Jump-starting', page 126 ff.

Disposal

Return used batteries to a recycling point or your MINI Dealer. Maintain the battery in an upright position for transport and storage. Secure the battery to prevent it from tilting during transport.◀

Online Edition for Part-No. 01 41 0 157 644 - © 09/03 BMW AG

FUSES

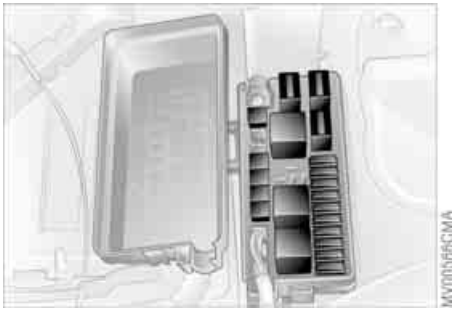

Do not attempt to repair a blown fuse or replace it with a fuse of a different color or Ampere rating. To do this could cause a fire in the vehicle resulting from a circuit overload.◀

If a fuse blows a second time, have the cause of the damage rectified by your MINI Dealer.◀

A fuse allocation diagram is located on the inside of the fuse box cover panel.

Plastic tweezers can be found in the fuse box in the vehicle interior, refer to next column.

In the engine compartment

In the MINI COOPER to the right of the battery.
In the MINI COOPER S to the right of the air filter box.

Open the fuse box lid. To do so, press the clip fastener.

In the vehicle interior

On the left side of the footwell in the side trim panel.

Open the cover panel of the fuse box. To do so, press the fastener.

Online Edition for Part-No. 01 41 0 157 644 - © 09/03 BMW AG

JUMP-STARTING

When your battery is discharged, you can use two jumper cables to start your MINI with power from the battery in a second vehicle. Correspondingly you can help start another vehicle. Only use jumper cables with fully insulated handles on the terminal clamps.

Preparing for jump-starting

Do not touch live wiring and cables on a running engine. There is a risk of fatal injury if you do this. Carefully observe the following instructions to avoid personal injury and/or damage to either vehicle or both vehicles. Make sure that there is no contact between the bodywork of the two vehicles to avoid a short circuit hazard.◀

1. Check whether the battery of the support vehicle has 12 Volts and approximately the same capacity measured in Ah. These data are printed on the battery
2. Switch off the engine of the support vehicle
3. Switch off any electrical systems and components in both vehicles.

Connect the jumper cables

Always adhere to this sequence when connecting the jumper cables; failure to observe this procedure can lead to sparking and pose an injury hazard.◀

Online Edition for Part-No. 01 41 0 157 644 - © 09/03 BMW AG

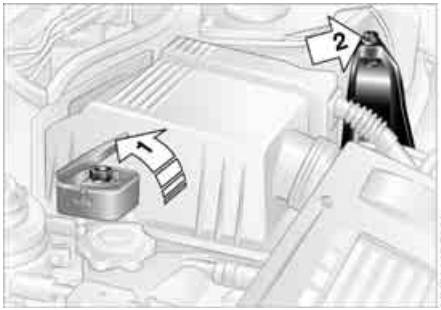

The illustration shows the auxiliary jump-starting terminal on the MINI COOPER S. In the MINI COOPER S, the auxiliary jump-starting terminal, arrow 1, acts as the positive battery terminal, refer to view of engine compartment on page 97.

1. Remove the cover of the battery or open the cover of the auxiliary jump-starting terminal:
   ▷ MINI COOPER:
   Remove the battery cover.
   To do so, press the two clips simultaneously.
   ▷ MINI COOPER S:
   Open the cover of the auxiliary jump-starting terminal, arrow 1
2. Connect one terminal clamp of the plus/+ jumper cable to the positive battery terminal or to an auxiliary jump-starting terminal of the support vehicle
3. Connect the other terminal clamp of the plus/+ jumper cable to the positive battery terminal or to an auxiliary jump-starting terminal of the vehicle to be started

Engine or body ground in your MINI: arrow 2.

4. Connect one terminal clamp of the minus/– jumper cable to the negative battery terminal or to an engine or body ground of the support vehicle
5. Connect the second terminal clamp of the minus/– jumper cable to the negative terminal of the battery or to the engine or body ground of the vehicle to be started.

Performing the jump-start

1. Start the engine of the support vehicle and allow it to run at a fast idle speed for several minutes
2. Start the engine of the other vehicle in the usual manner.
   If the first start attempt is not successful, wait a few minutes before another attempt in order to allow the discharged battery to recharge
3. Allow the engines of both vehicles to run for several minutes

   ⚠ On the MINI: before disconnecting the jumper cables, switch on the lighting, the rear window defroster and the highest blower speed to prevent a voltage surge from the regulator to the electrical systems and components.◀
4. Then disconnect the jumper cables in the reverse order.

If necessary have the battery checked and completely charged at a MINI Dealer.

▷ Do not use spray starter fluids to start the engine.◀

Online Edition for Part-No. 01 41 0 157 644 - © 09/03 BMW AG

For towing, use either a tow bar or nylon ropes or straps that prevent sudden jerking movements.

Towing eyelet

The screw-in towing eyelet is stored in the onboard tool kit; be sure that it remains in the vehicle at all times. It can be attached at the front or rear of the vehicle.

Access to tow sockets

Use a suitable object, e.g. credit card, screwdriver, to press out the covers from the recess.

Use only the towing eyelet supplied with the vehicle and screw it in firmly until it stops. Use the towing eyelet for towing on paved roads only. If you do not follow these instructions, the towing eyelet could detach itself from the vehicle or the vehicle could be damaged. Never attach tie-down hooks, chains, straps, or tow hooks to tie rods, control arms, or any other part of the vehicle suspension, as this could damage the components and possibly lead to accidents.◀

Avoid staggered towing and make sure that the towing rope is taut before the vehicle that is towing drives off.◀

Tow bars

If the towing eyelets of the two vehicles are not directly opposite one another, please note:

▷ Clearance and maneuvering capability will be strictly limited in corners
▷ The inclination of the tow bar generates lateral force, critical above all if the road surface is slippery.

Do not tow a vehicle that is heavier than the towing vehicle; otherwise it will no longer be possible to control the vehicle's response.◀

Online Edition for Part-No. 01 41 0 157 644 - © 09/03 BMW AG

Tow-starting

It is not possible to start the engine of a vehicle equipped with an automatic transmission by towing or pushing.

For instructions on jump starting, refer to page 126.

Never attempt to use your vehicle to push another car, since damage to the energy-absorbing bumpers could result.

Towing a vehicle

Only tow vehicles with Continuously Variable automatic Transmission (CVT) with the front wheels raised or on a special transport vehicle, otherwise the transmission can be damaged.◀

1. Place gear selector lever in neutral or idle
2. Towing speed:
   Max. 45 mph / 70 km/h
3. Towing distance:
   Max. 95 miles / 150 km
4. Leave the ignition key at position 1 to ensure that the brake lamps, turn signals, horn and windshield wipers remain operative, and to prevent the steering lock detent from engaging
5. Switch on the hazard-warning system, observe country-specific regulations.

Find some means of identifying the vehicle in tow, for instance, by turning on the hazard warning flashers.

Make sure that the ignition key remains in position 1 even when the electrical system has failed to prevent the steering lock from engaging.
The steering and brakes are without power assist when the engine is off. This means that increased effort is required for steering and braking.◀

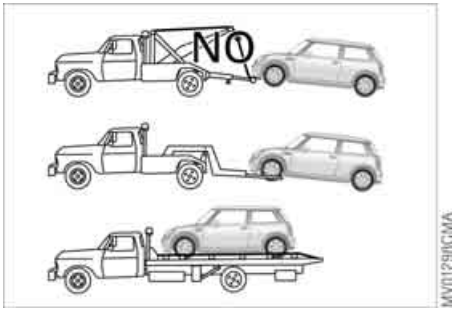

Towing with a commercial tow truck

▷ Do not tow with sling-type equipment
▷ Use a wheel-lift or flatbed carrier
▷ Please comply with applicable towing laws.

Never allow passengers to ride in a towed vehicle for any reason.◀

Online Edition for Part-No. 01 41 0 157 644 - © 09/03 BMW AG

Online Edition for Part-No. 01 41 0 157 644 - © 09/03 BMW AG

OVERVIEW

CONTROLS

OPERATION, CARE, MAINTENANCE

OWNER SERVICE PROCEDURES

TECHNICAL DATA

INDEX

Online Edition for Part-No. 01 41 0 157 644 - © 09/03 BMW AG

ENGINE DATA

		MINI COOPER	MINI COOPER S
Displacement Number of cylinders	cu in / cm^3	97.52 / 1,598 4	97.52 / 1,598 4
Maximum output at engine speed	hp / kW rpm	115 / 85 6,000	163 / 120 6,000
Maximum torque at engine speed	lb ft / Nm rpm	110 / 149 4,500	155 / 210 4,000
Compression ratio	ε	10.6	8.3
Stroke Bore	in / mm in / mm	3.38 / 85.8 3.03 / 77	3.38 / 85.8 3.03 / 77
Fuel mixture preparation		Digital electronic engine-management system	

Online Edition for Part-No. 01 41 0 157 644 - © 09/03 BMW AG

DIMENSIONS

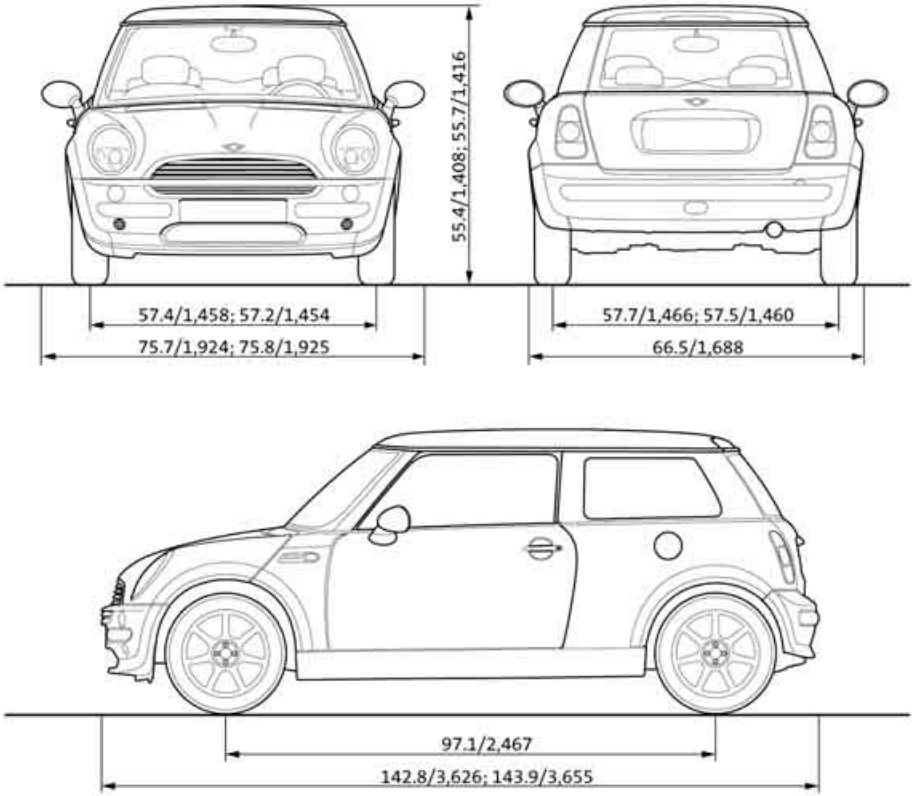

All measurements in inches / millimeters. Smallest turning circle dia. 35 ft / 10.66 m.
Values following a ; are differing values for MINI COOPER S.

Online Edition for Part-No. 01 41 0 157 644 - © 09/03 BMW AG

WEIGHTS

		MINI COOPER	MINI COOPER S
Curb weight, with all optional special equipment with manual transmission with Continuously Variable automatic Transmission (CVT)	 lbs / kg lbs / kg	 2,524 / 1,145 2,557 / 1,160	 2,678 / 1,215 –
Approved gross vehicle weight with manual transmission with Continuously Variable automatic Transmission (CVT)	 lbs / kg lbs / kg	 3,340 / 1,515 3,373 / 1,530	 3,494 / 1,585 –
Cargo and luggage load capacity	lbs / kg	816 / 370	816 / 370
Approved front axle load	lbs / kg	1,918 / 870	1,962 / 890
Approved rear axle load	lbs / kg	1,609 / 730	1,698 / 770
Approved roof load, with special MINI roof rack	lbs / kg	165 / 75	165 / 75
Cargo area volume with rear backrest folded down	cu ft / liters cu ft / liters	5.3 / 150 23.7 / 670	5.3 / 150 23.7 / 670

Online Edition for Part-No. 01 41 0 157 644 - © 09/03 BMW AG

CAPACITIES

			Notes
Fuel tank Reserve	gal. / liters	approx. 13.2 / 50 approx. 2.1 / 8	Fuel quality, refer to page 85
Windshield washer system Headlamp washer system	quarts / liters	approx. 2.1 / 2.0 approx. 2.6 / 2.5	More details, refer to page 98
Cooling system including heater circuit	quarts / liters	5.6 / 5.3 MINI COOPER 6.3 / 6.0 MINI COOPER S	More details, refer to page 100
Engine with oil filter change	quarts / liters	4.7 / 4.5 MINI COOPER 4.7 / 4.5 MINI COOPER S	High Performance Synthetic Oil: for more details, refer to page 99
Manual transmission	quarts / liters	approx. 2.1 / 2.0 MINI COOPER approx. 1.8 / 1.7 MINI COOPER S	Contact your MINI Dealer for more details
Continuously Variable automatic Transmission (CVT)	quarts / liters	approx. 4.2 / 4.0 MINI COOPER	Contact your MINI Dealer for more details

Online Edition for Part-No. 01 41 0 157 644 - © 09/03 BMW AG

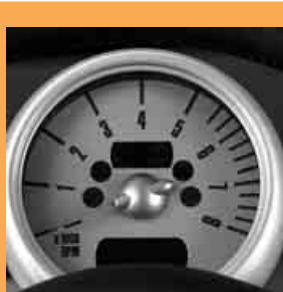

Online Edition for Part-No. 01 41 0 157 644 - © 09/03 BMW AG

OVERVIEW

CONTROLS

OPERATION, CARE, MAINTENANCE

OWNER SERVICE PROCEDURES

TECHNICAL DATA

INDEX

Online Edition for Part-No. 01 41 0 157 644 - © 09/03 BMW AG

A
ABS Antilock Brake System 61
indicator lamp 16, 17
Accessories, refer to
For your own safety 7
Your individual vehicle 6
Activated-charcoal filter 72
Air circulation, refer to
Recirculated air mode 68, 71
Air conditioning
air conditioning system 68
automatic climate control 71
Air conditioning system 67
Air distribution
air conditioning system 68
automatic climate control 71
Air outlets, refer to
Ventilation 69, 72
Air pressure, refer to Tire
inflation pressure 87
Air supply
air conditioning system 68
automatic climate control 72
Air, drying, refer to Air
conditioning 68, 71
Airbags 65
indicator lamp 16
safe seating position 31
AKI, refer to Fuel quality 85
All Season traction Control
(ASC) 59
indicator lamp 16, 17
All-season tires, refer to Winter
tires 92
Antenna 103
Antifreeze
coolant 100
washer fluid 98
Antilock Brake System (ABS) 61
indicator lamp 16, 17
Approved axle load, refer to
Weights 134
Approved engine oils 99
Approved gross vehicle weight,
refer to Weights 134
ASC All Season traction
Control 59
indicator lamp 16, 17
Ashtray 74
Assistant systems, refer to
All Season traction Control
(ASC) 59
Dynamic Stability Control
(DSC) 60
AUTO program, refer to
Automatic air distribution 71
Automatic
air distribution 71
air supply 71
cruise control 52
Automatic car washes 103
Automatic climate control 70
Automatic headlamp range
control for xenon lamps,
refer to Daytime driving
lamps 48
Average consumption
setting units 58
Average speed
setting units 58
Axle loads, refer to
Weights 134

B
Backrests, refer to
Adjusting seats 33
Backup lamp 44
bulb replacement 114
Bar, towing 128
Battery 124
disposal 22, 124
indicator lamp 15
jump-starting 126
remote control 22
Belts, refer to Safety belts 35
Beverage holders 74
Blower
air conditioning system 68
automatic climate control 72
Blower, refer to Air flow 68, 72
Blowers, refer to Draft-free
ventilation 69, 72
BMW 6
Bonnet 95
indicator lamp 16
Bore, refer to Engine data 132
Bottle holders, refer to
Beverage holders 74
Brake discs
brake system 86
break-in procedures 82
Brake fluid 101
adding 101
level 86
warning lamp 15
Brake lamps
bulb replacement 114
Brake pads 86
break-in procedures 82
warning lamp 16
Brake system 86
brake fluid level 86
brake pads 86
disc brakes 86
warning lamp 16
Brake wear warning
brake pads 86
warning lamp 16

Online Edition for Part-No. 01 41 0 157 644 - © 09/03 BMW AG

Brakes 86
ABS 61
brake fluid 101
break-in procedures 82
handbrake 43
indicator/warning lamps 15, 16
Breaking in 82
Bulb replacement, refer to Lamps and bulbs 111
Buttons in multifunction steering wheel 18
Continuously Variable automatic Transmission (CVT) 46

C
California Proposition 65 warning 107
Capacities 135
Car care, refer to Caring for your vehicle 103
Car keys, refer to Keys 22
Car radio, refer to separate Owner's Manual
Car telephone, refer to separate Owner's Manual
Car vacuum cleaner, connecting, refer to Cigarette lighter socket 74
Car wash 103
Car wash, refer to Washing your vehicle 103
Car-care products 103
Care, vehicle 103
Cargo area 75
cover 75
emergency operation, refer to Manual operation 27
foldable rear backrest 75
lid, refer to Tailgate 27
volume, refer to Weights 134
Cargo area lamps
bulb replacement 116
Cargo area net 77
Carpet care 104
Cassette operation, refer to Owner's Manual for Radio
Catalytic converter, refer to High temperatures 83
CBC Cornering Brake Control 61
warning lamp 16
CD changer, refer to separate Owner's Manual
CD operation, refer to Owner's Manual for Radio
Center high-mount brake lamp
bulb replacement 114
Central locking system 23
interior 26
Changing bulbs, refer to Lamps and bulbs 111
Changing tires
space-saver spare tire 117
Charge-current indicator light 15
Child seat, refer to Child-restraint systems 38
Child-restraint systems 38
Chock, folding
MINI Mobility System 121
Run Flat tires 93
space-saver spare tire 117
Chrome parts, refer to Caring for your vehicle 104
Chrome-plated parts, care 104
Cigarette lighter 74
Cigarette lighter socket 74
Circulation of air, refer to Recirculated air mode 68, 71
Cleaning the rear window 51
Cleaning the vehicle, refer to Caring for your vehicle 103
Clock 56
Closing
from inside 26
from outside 23
Clothes hooks 83
Clutch
break-in procedures 82
Cockpit 12
Cold start, refer to Starting the engine 41
Compact disk operation, refer to Owner's Manual for Radio
Compartments 73
Compression, refer to Engine data 132
Compressor, refer to MINI Mobility System
operation, refer to Reinflating tires 122
storage location 110
Computer, refer to Onboard computer 57
Condensed water, refer to Air conditioning 68, 71
Configuring settings, refer to Vehicle Memory 37
Consumption, refer to Average consumption 58
Consumption, refer to Current consumption 58
Contents 2
Continuously Variable automatic Transmission (CVT) 45
ignition 41
indicator lamp 47
interlock 41
selector lever lock 45
shiftlock 45
towing 129

Online Edition for Part-No. 01 41 0 157 644 - © 09/03 BMW AG

Control elements, refer to Cockpit 12
Convenience operation
from outside 24, 25
glass sunroof, electric 29
window 28
Coolant 100
indicator lamp 15
level 100
temperature 55
Coolant temperature gauge 55
Cooling system, refer to Capacities 135
Cooling, refer to Air conditioning 68, 71
Copyright 2
Cornering Brake Control (CBC) 61
warning lamp 16
Cosmetic mirror, refer to Illuminated vanity mirror 36
Cruise control 52
indicator lamp 17
multifunction steering wheel 18
sports steering wheel 18
Cup holders, refer to Beverage holders 74
Curb weight, refer to Weights 134
Current fuel consumption
setting units 58
Cylinders, refer to Engine data 132

D

Daily odometer, refer to Trip odometer 54
Dashboard lighting, refer to Instrument lighting 49
Data, technical
dimensions 133
engine data 132
weights 134
Date of the Owner's Manual 7
Daytime driving lamps 48
Deep water, refer to Water on roadways 83
Defrost setting, refer to Defrosting and demisting windows 69, 72
Defrosting and demisting windows
air conditioning system 69
automatic climate control 72
Defrosting windows 69, 72
air conditioning system 68
automatic climate control 71
Defrosting windshield, refer to Defrosting and demisting windows 69, 72
Demisting windows 69, 72
Digital clock 56
Dimensions 133
Dimming interior rearview mirror 37
Dipstick, engine oil 98
Directional turn signal, refer to Turn signal indicators 49
Disc brakes 86
Displacement, refer to Engine data 132
Display elements 13
with navigation system 14
Display lighting, refer to Instrument lighting 49
Disposal
oil 99
remote control battery 22
vehicle battery 124
Distance covered, refer to Odometer 54
Door keys 24
Door lock 25
Doors, locking and unlocking
from inside 26
from outside 24
DOT quality grades 89
Draft-free ventilation 69, 72
Drink holders, refer to Beverage holders 74
Driving lamps, refer to Parking lamps/Low beams 48
Driving notes 83
break-in procedures 82
Driving stability control 59, 60
Dry air, refer to Air conditioning 68, 71
DSC Dynamic Stability Control 60
indicator lamp 16
DVD changer, refer to separate Owner's Manual
Dynamic Stability Control (DSC) 60
indicator lamp 16
Dynamic Stability Control (DSC) 60

E

Easy entry to the rear 34
EBD Electronic Brake Force Distribution 61
indicator lamp 16
Electric glass sunroof 29
Electric power windows 28
initializing 28

Online Edition for Part-No. 01 41 0 157 644 - © 09/03 BMW AG

Electrical malfunction
door lock 25
driver's door 25
glass sunroof, electric 30
tailgate 27
transmission lock for Continuously Variable automatic Transmission (CVT) 47
Electronic Brake Force Distribution (EBD) 61
indicator lamp 16
Electronic Stability Program (ESP), refer to Dynamic Stability Control (DSC) 60
Electronic transmission control module 47
Emergency operation, refer to Manual operation
driver's door 25
glass sunroof, electric 30
tailgate 27
Engine
break-in procedures 82
data 132
electronics 17
indicator lamp 17
speed 54
starting 41
switching off 43
Engine compartment
MINI COOPER 96
MINI COOPER S 97
Engine coolant 100
Engine data 132
Engine oil 98
alternative oils 99
capacity 135
indicator/warning lamp 15
recommended oils 99
Engine oil level 98
indicator/warning lamp 15
Engine oil pressure
indicator/warning lamp 15
Engine output, refer to Engine data 132
Engine speed, refer to Engine data 132
Entry to the rear 34
EP electronic transmission control module
Continuously Variable automatic Transmission (CVT) 47
Equipment and features, refer to Service and Warranty Information Booklet for US models, Warranty and Service Guide Booklet for Canadian models
ESP Electronic Stability Program, refer to Dynamic Stability Control (DSC) 60
Exhaust system, refer to High temperatures 83
Exterior mirrors 36
Eyelet, towing 128

F

Failure of an electrical consumer 125
Fasten safety belts 35
indicator lamp 16
Filling canister, refer to MINI Mobility System 122
Filling hose, refer to MINI Mobility System 122
Filter, refer to Microfilter/activated-charcoal filter 72
Flat tire
Flat Tire Monitor 62, 63
indicator/warning lamp 16
MINI Mobility System 121
Run Flat tires 93
space-saver spare tire 117
tire condition 91
Flat Tire Monitor 62
indicator lamp 16, 17
initializing 62
Floor coverings and carpets 104
Floor mat 104
Fog lamps 49
bulb replacement 113
indicator lamp 49
Foldable rear backrest 75
'Follow me home' lamps 48
Foot brake, refer to Driving notes 83
Footwell lamps 50
bulb replacement 116
Front airbags 65
Fuel
average consumption 58
gauge 54, 55
mixture preparation, refer to Engine data 132
quality 85
volume, refer to Capacities 135
Fuel filler cap
unlocking in the event of electrical malfunction 84
Fuel tank capacity, refer to Capacities 135
Fuses 125

G

Gas cap 84
Gasoline gauge, refer to Fuel gauge 54, 55

Online Edition for Part-No. 01 41 0 157 644 - © 09/03 BMW AG

Gasoline, refer to Fuel quality 85
Gear indicator 47
Gearshift lever
Continuously Variable automatic Transmission (CVT) 45
manual transmission 44
General driving notes 83
Glass sunroof, electric 29
convenience operation 24, 25
pinch protection 30
Glove compartment 73
Glove compartment lamp
bulb replacement 116
Gross weight, refer to Weights 134

H

Handbrake, refer to Parking brake 43
Hazard warning flashers 12
Head airbags 65
Head restraints 33
Headlamp flasher 49
indicator lamp 17
Headlamp washer
cleaning headlamps 51
washer fluid 98
Headlamp washer reservoir 98
capacity, refer to Capacities 135
Headlamps
bulb replacement 112
care 103
cleaning 51
Heated mirrors 36
Heated rear window
air conditioning system 68
automatic climate control 71
Heating 67
exterior mirrors 36
rear window 68, 71
seats 35
windshield 68, 71
Heavy load, refer to Loading cargo 77
Height adjustment
seats 32
steering wheel 36
Height, refer to Dimensions 133
Hex wrench 121
High beams 49
bulb replacement 112
headlamp flasher 49
indicator lamp 17
High Performance Synthetic Oil, refer to Engine oil 99
alternative oils 99
capacity 135
recommended oils 99
specified oils 99
High temperatures 83
Holders for beverages 74
Horn 12
Hydroplaning 83

I

Ice warning 57
Identification mark
Run Flat tires 93
Ignition 41
Ignition key 22
Ignition lock 41
Illuminated vanity mirror 36
Illumination
of instruments 49
Imitation leather 104
Imprint 2
Index 138
Indicator and warning lamps, overview 15
Indicator/warning lamp
airbags 65
ASC 59
brakes 101
coolant temperature 55
DSC 60
fasten safety belts 35
Flat Tire Monitor 63
fog lamps 49
reserve fuel capacity 54, 55
Individual air distribution 72
Individual settings, refer to Vehicle Memory 37
Inflation pressure monitor, refer to Flat Tire Monitor 62
Inflation pressure, tires 87
Inspection 56
Instrument cluster, refer to Display elements 13
Instrument lighting 49
Instrument panel, refer to Cockpit 12
Interior lamps 50
bulb replacement 115
Interior rearview mirror 36
automatic dimming 37
Interior temperature settings 68, 71
Interlock, refer to Steering locked 41

Online Edition for Part-No. 01 41 0 157 644 - © 09/03 BMW AG

Intermittent operation
wipers 50
Interval display, service 102

J
Jack, refer to Tire change set
MINI Mobility System 121
Run Flat tires 93
space-saver spare tire 117
Jacking points 119
Jets, refer to Ventilation 69, 72
Jets, refer to Windshield
washer jets 51
Jump-starting 126

K
Keys 22
Kickdown 46
Knock control 85

L
Lamp defect 111
Lamp replacement, refer to
Lamps and bulbs 111
Lamps and bulbs 111
Lamps, refer to Parking lamps/
Low beams 48
Lashing eyes, refer to Securing
the load 77
LATCH child-restraint
mounting system 40
Leather care 105
LEDs light-emitting diodes 50
Length, refer to
Dimensions 133
License plate lamp
bulb replacement 115
Lifting handle, space-saver
spare tire, refer to Tire
change set 117
Light switch 48
Light-alloy wheels, care 104
Light-emitting diodes 50
Lighter 74
'Lights on' warning 48
Load securing devices, refer to
Securing the load 77
Loading cargo
vehicle 76
Loads, refer to Loading cargo 76
Locking
from inside 26
from outside 24
Low beams 48
bulb replacement 112
Lower back support, refer to
Lumbar support 33
Luggage compartment
capacity, refer to Cargo area
volume 134
Luggage compartment cover,
refer to Cargo area cover 75
Luggage compartment lamps,
refer to Cargo area lamps 116
Luggage compartment lid
emergency operation, refer
to Manual operation 27
Luggage compartment lid, refer
to Tailgate 27
Luggage compartment, refer to
Cargo area 75
Luggage rack, refer to Roof-
mounted luggage rack 78
Lumbar support 33

M
M+S tires, refer to Winter
tires 92
Maintenance system 102
Maintenance, refer to Service
interval display 56, 102
Malfunction
door lock 25
glass sunroof, electric 30
tailgate 27
Manual mode, refer to
Continuously Variable
automatic Transmission
(CVT) 46
Manual operation
door lock 25
driver's door 25
fuel filler cap 84
glass sunroof, electric 30
tailgate 27
Manual transmission 44
Manufacturer 6
Master key
initializing 22
with remote control 22
MC operation, refer to
Owner's Manual for Radio
Memory, refer to Vehicle
Memory 37
MFL Multifunction steering
wheel 18
Microfilter
air conditioning system 69
automatic climate control 72
MINI Maintenance System 102
MINI manufacturer 6
MINI Mobility System 121
compressor 122
liquid sealant 122
Mirrors 36
heating 36
Mobility System 121
Modifications, technical, refer
to For your own safety 7

Online Edition for Part-No. 01 41 0 157 644 - © 09/03 BMW AG

Multifunction sports steering wheel 19
Multifunction steering wheel 18
Multifunction switch
turn signal indicator/ headlamp flasher 49
washer/wiper system 50

N
Navigation system, refer to separate Owner's Manual
Neck restraints, refer to Head restraints 33
New tires 92
Non-smoker's equipment package, refer to Cigarette lighter socket 74
Nylon rope 128

O
OBD interface socket 106
Octane number, refer to Fuel quality 85
Odometer 54
Oil 56
Oil change intervals, refer to Service and Warranty Information Booklet for US models, Warranty and Service Guide Booklet for Canadian models
Oil consumption 99
Oil filter change 135
Oil level 98
indicator/warning lamp 15
Oil level, measuring 98
Oil pressure
indicator/warning lamp 15
Oil, refer to Engine oil
alternative oils 99
capacity 135
dipstick 98
indicator/warning lamp 15
recommended oils 99
Onboard computer 57
Onboard tool kit 110
MINI Mobility System 121
space-saver spare tire 117
Opening and closing
from inside 26
from outside 23
via remote control 23
via the door lock 25
Outlets, refer to Ventilation 67, 70
Outside temperature
display 57
changing units 57
in the onboard computer 57

P
Paintwork care, refer to Vehicle paintwork 103
Park Distance Control (PDC) 64
Parking aid, refer to Park Distance Control (PDC) 64
Parking brake 43
warning lamp 16
Parking lamps 48
bulb replacement 112
Parking lamps/Low beams 48
Parking lock, refer to Transmission lock 46
Parking the vehicle 83
Parts and accessories, refer to Your individual vehicle 6
PDC Park Distance Control 64
Pinch protection
glass sunroof, electric 30
Plastic 104
Pollen, refer to
Microfilter 69
Microfilter/activated-charcoal filter 72
Power output, refer to Engine data 132
Power supply, refer to Cigarette lighter socket 74
Power windows 28
Pressure monitor, tires
Flat Tire Monitor 62
Pressure, tires 87
production using MINI Mobility System 122
Pumping in liquid sealant 122

Q
Quality grades, refer to Uniform Tire Quality Grading 89

R
Radiator, refer to Coolant 100
Radio, refer to separate Owner's Manual
Rain sensor 50
Range 58
Reading lamps 50
bulb replacement 115
Rear backrests
folding 75
Rear fog lamp 49
bulb replacement 113
indicator lamp 49
Rear lamps, refer to Tail lamps 113
bulb replacement 113, 114
Rear seats
adjusting head restraints 33
Rear shelf, refer to Cargo area cover 75

Online Edition for Part-No. 01 41 0 157 644 - © 09/03 BMW AG

Rear turn signal indicator
bulb replacement 113
Rear window wiper 51
replacement 111
Rearview mirror 36
Recirculated air mode
air conditioning system 68
automatic climate control 71
Reclining seat, refer to Backrest tilt 33
Refueling 84
Remaining distance for service 56
Remaining distance, refer to Range 58
Remote control 23
changing battery 22
initializing 22
malfunctions 25
Remote control key, refer to Master key with remote control 22
Replacement key 22
Replacement of tires 92
changing tires 117
Reporting safety defects 9
Reserve indicator light, refer to Fuel gauge 54, 55
Reservoir
washer system 98
Restraint systems
for children 38
refer to Safety belts 35
Reverse
Continuously Variable automatic Transmission (CVT) 46
manual transmission 44
Rod antenna 103
Roller sun blind 30
Roof load, refer to Weights 134
Roof-mounted luggage rack 78
Rope, refer to Towing 128
RSC Runflat System Component, refer to Run Flat tires 93
Rubber parts 104
Run Flat tires 93
tire failure 93
tire inflation pressure 87
Runflat System Component (RSC), refer to Run Flat tires 93

S

Safety belt height adjustment 35
Safety belts 35
care 104
height adjustment 35
safe seating position 31
warning lamp 16, 35
Safety lock buttons, doors, refer to Locking 26
Safety systems, refer to
All Season traction Control (ASC) 59
Antilock Brake System (ABS) 61
Dynamic Stability Control (DSC) 60
Screwdriver, refer to Onboard tool kit 110
Seat adjustment 32
Seat heating 35
Securing loads, refer to Loading cargo 76
Securing the load 77
Securing the vehicle
from inside 26
from outside 24
Selector lever
Continuously Variable automatic Transmission (CVT) 45
Selector lever positions
Continuously Variable automatic Transmission (CVT) 45
Selector lever shiftlock, refer to Shiftlock 45
Service 56
Service interval display 56, 102
Service, refer to Service and Warranty Information Booklet for US models, Warranty and Service Guide Booklet for Canadian models 102
Shifting
Continuously Variable automatic Transmission (CVT) 46
manual transmission 44
Shifting gears, refer to
Continuously Variable automatic Transmission (CVT) 45
Shiftlock, refer to Range selection 45
Side airbags 65
Side turn signal indicators
bulb replacement 113
Signal horn, refer to Horn 12

Online Edition for Part-No. 01 41 0 157 644 - © 09/03 BMW AG

Sitting safely 31
with airbags 31
with safety belt 31
Size, refer to Dimensions 133
Sliding/tilt sunroof, refer to Glass sunroof, electric 29
Smoker's equipment package, refer to Ashtray 74
Snow chains 94
Socket 12 V 74
Socket, for onboard diagnostics 106
Space-saver spare tire
changing tires 117
Spare key 22
Spare tire, refer to Space-saver spare tire 117
Special oils, refer to Specified engine oils 99
Special wash program, refer to Washing your vehicle 103
Specified engine oils 99
Speed control, refer to Cruise control 52
Speedometer 13, 14
Split rear backrest, refer to Foldable rear backrest 75
Sport program
Continuously Variable automatic Transmission (CVT) 46
Stability control
All Season traction Control (ASC) 59
Dynamic Stability Control (DSC) 60
Standing lamps 48
bulb replacement 112
Starting aid
All Season traction Control (ASC) 59
Dynamic Stability Control (DSC) 60
Starting aid, refer to Jump-starting 126
Starting problems
jump-starting 126
temperature 42
Starting the engine 41
Steering lock 41
Steering wheel 12
settings 36
Steering wheel lock 41
Steering wheel with multifunction buttons 18
Storage compartments 73
Storage space, refer to Cargo area 75
Storage, tires 92
Storing the vehicle 105
Stroke, refer to Engine data 132
Sun blind, refer to Roller sun blind 30
Sun visors 36
Surface ice, refer to Ice warning 57
Switches, refer to Cockpit 12
Switching off the engine 43
Switching the air conditioning on and off manually 68, 71
Symbols 6

T

Tachometer 54
Tail lamps
bulb replacement 114
Tailgate 27
emergency operation, refer to Manual operation 27
indicator lamp 16
to open from the outside 27
Tank capacity, refer to Fuel tank capacity 135
Tank gauge, refer to Fuel gauge 54, 55
Technical data 132
Technical modifications, refer to For your own safety 7
Temperature
air conditioning system 68
automatic climate control 71
engine 55
Temperature display
ice warning 57
outside temperature 57
setting units 57
Temperature grades 90
Third brake lamp
bulb replacement 114
Third brake lamp, refer to Center high-mount brake lamp 114
Three-point seat belt, refer to Safety belts 35
Tightening the lug bolts
keys 117, 121
Tightening torque, refer to Tightening the lug bolts 120
Tire change set
MINI Mobility System 123
Run Flat tires 93
space-saver spare tire 117
Tire failure 116
MINI Mobility System 121
space-saver spare tire 117
Tire inflation pressure 87, 123
reinflation 122
Tire pressure monitor, refer to Flat Tire Monitor 62

Online Edition for Part-No. 01 41 0 157 644 - © 09/03 BMW AG

Tires
age 89
break-in procedures 82
changing 117
condition 91
damage 91
flat tire 93, 116
inflation pressure 87
replacement 92
storage 92
tread 91
wear indicator, refer to Tire tread 91
winter tires 92
Tools, refer to Onboard tool kit 110
Torque, refer to Engine data 132
Tow
bar 128
eyelet 128
rope 128
Tow fitting, refer to Towing eyelet 128
Tow socket for towing eyelet 128
Towing 128
with automatic transmission 129
Towing eyelet 128
Track width, refer to Dimensions 133
Traction grades 90
Transmission
Continuously Variable automatic Transmission (CVT) 45
manual transmission 44
Transmission lock, refer to Range selection 45
Transmission malfunction 47
Transporting children 38
Transporting children safely 38
Trash container, refer to Ashtray 74
Tread depth, refer to Tire tread 91
Treadwear grade 89
Trip odometer 54
Trunk, refer to Cargo area 75
Turn signal indicators 49
indicator lamp 17
Turn signal indicators, front
bulb replacement 112
Turn signal indicators, side
bulb replacement 113
Turning circle, refer to Dimensions 133

U
Uniform Tire Quality Grading 89
Units
average consumption 58
average speed 58
temperature 57
Unlocking
bonnet 95
from inside 26
from outside 24
Used batteries, refer to Disposal 124
Using antifreeze 98, 100

V
Vacuum cleaner, connecting, refer to Cigarette lighter socket 74
Valve
core 121
dust cap 118
remover 121
spare 121
Valve remover, refer to Onboard tool kit 121
Valve stem and replacement valve, refer to Onboard tool kit 121
Vanity mirror
bulb replacement 115
illuminated 36
Vehicle
battery 124
break-in procedures 82
care 103
dimensions 133
loading cargo 76
storage 105
switching off 83
washing 103
weight 134
Vehicle Memory 37
Ventilation
draft-free 69, 72
Volume
cargo area, refer to Weights 134
fuel tank, refer to Capacities 135

W
Warning and indicator lamps 15
Warranty, refer to Service and Warranty Information Booklet for US models, Warranty and Service Guide Booklet for Canadian models 102

Online Edition for Part-No. 01 41 0 157 644 - © 09/03 BMW AG

Washer fluid 98
Washer fluid reservoir, refer to Capacities 135
Washer fluid reservoir, refer to Washer/Wiper system 98
Washer systems 98
Washer/wiper system 50
Washing your vehicle 103
Water on roadways, deep water 83
Wear indicators in the tires, refer to Tire tread/Tire damage 91
Weights 134
Wheel stud wrench
MINI Mobility System 121
space-saver spare tire 117
Wheelbase, refer to Dimensions 133
Wheelslip control
All Season traction Control (ASC) 59
Dynamic Stability Control (DSC) 60
Width, refer to Dimensions 133
Window
convenience operation 24, 25
Windscreen wipers
replacement 110, 111
Windshield heating
air conditioning system 68
automatic climate control 71
Windshield washer jets 51
Windshield washer reservoir 98
refer to Capacities 135
Windshield washer system
washer fluid 98
washer/wiper system 50
Windshield wiper blades
care 104
replacement 110, 111
Windshield wipers, refer to Washer/wiper system 50
Windshield, cleaning 51
Winter tires
changing 117
storage 92
Winter tires, refer to Special characteristics of winter tires 92
Wood paneling 104
Work in the engine compartment 95
Wrench, refer to Onboard tool kit 110

X

Xenon lamps
bulb replacement 112
daytime driving lamps 48

Online Edition for Part-No. 01 41 0 157 644 - © 09/03 BMW AG

REFUELING

Fuel	
Designation	
AKI:	

Engine oil	
Quality	

The oil volume between the two notches on the dipstick corresponds to approx. 1.1 US quarts / 1 liter.

Tire inflation pressure	Summer		Winter	
	front	rear	front	rear
2 persons				
4 persons plus luggage				

To ensure that you always have convenient access to all essential information when you stop for fuel, we recommend that you take the time to fill out the adjoining chart by entering the data that applies to your vehicle.

MINI RECOMMENDS Castrol

Online Edition for Part-No. 01 41 0 157 644 - © 09/03 BMW AG

01 41 0 157 644 ue

DRIVE ME.

Online Edition for Part-No. 01 41 0 157 644 - © 09/03 BMW AG