CHRYSLER

2012 300

OWNER'S MANUAL

VEHICLES SOLD IN CANADA

With respect to any Vehicles Sold in Canada, the name Chrysler Group LLC shall be deemed to be deleted and the name Chrysler Canada Inc. used in substitution therefore.

DRIVING AND ALCOHOL

Drunken driving is one of the most frequent causes of accidents.

Your driving ability can be seriously impaired with blood alcohol levels far below the legal minimum. If you are drinking, don't drive. Ride with a designated non-drinking driver, call a cab, a friend, or use public transportation.

WARNING!
Driving after drinking can lead to an accident. Your perceptions are less sharp, your reflexes are slower, and your judgment is impaired when you have been drinking. Never drink and then drive.

This manual illustrates and describes the operation of features and equipment that are either standard or optional on this vehicle. This manual may also include a description of features and equipment that are no longer available or were not ordered on this vehicle. Please disregard any features and equipment described in this manual that are not on this vehicle.

Chrysler Group LLC reserves the right to make changes in design and specifications, and/or make additions to or improvements to its products without imposing any obligation upon itself to install them on products previously manufactured.

Copyright © 2011 Chrysler Group LLC

TABLE OF CONTENTS

SECTION		PAGE
1	INTRODUCTION	3
2	THINGS TO KNOW BEFORE STARTING YOUR VEHICLE	9
3	UNDERSTANDING THE FEATURES OF YOUR VEHICLE	87
4	UNDERSTANDING YOUR INSTRUMENT PANEL	271
5	STARTING AND OPERATING	343
6	WHAT TO DO IN EMERGENCIES	447
7	MAINTAINING YOUR VEHICLE	471
8	MAINTENANCE SCHEDULES	525
9	IF YOU NEED CONSUMER ASSISTANCE	541
10	INDEX	551

INTRODUCTION

CONTENTS

■ Introduction 4
■ How To Use This Manual 4
■ Warnings And Cautions 6
■ Vehicle Identification Number 6
■ Vehicle Modifications/Alterations 7

INTRODUCTION

Congratulations on selecting your new Chrysler Group LLC vehicle. Be assured that it represents precision workmanship, distinctive styling, and high quality - all essentials that are traditional to our vehicles.

This Owner's Manual has been prepared with the assistance of service and engineering specialists to acquaint you with the operation and maintenance of your vehicle. It is supplemented by Warranty Information, and various customer-oriented documents. Please take the time to read these publications carefully. Following the instructions and recommendations in this manual will help assure safe and enjoyable operation of your vehicle.

NOTE: After reviewing the owner information, it should be stored in the vehicle for convenient referencing and remain with the vehicle when sold.

When it comes to service, remember that your authorized dealer knows your vehicle best, has factory-trained technicians and genuine MOPAR® parts, and cares about your satisfaction.

HOW TO USE THIS MANUAL

Consult the Table of Contents to determine which section contains the information you desire.

Since the specification of your vehicle depends on the items of equipment ordered, certain descriptions and illustrations may differ from your vehicle's equipment.

The detailed index at the back of this Owner's Manual contains a complete listing of all subjects.

Consult the following table for a description of the symbols that may be used on your vehicle or throughout this Owner's Manual:

WATER IN FUEL
REAR WINDOW WIPER
WINDSHIELD WIPER INTERMITTENT
EXTERIOR BULB FAILURE
HIGH BEAM
TURN SIGNALS
UPPER AIR OUTLET
HEATED SEAT LOW
DOOR LOCK
ADJUSTABLE PEDALS
ELECTRONIC SPEED CONTROL
ESP BAS
ELECTRONIC STABILITY PROGRAM / BRAKE ASSIST SYSTEM
FUEL
REAR WINDOW INTERMITTENT WIPER
WINDSHIELD WASHER
MASTER LIGHTING SWITCH
LOW BEAM
KEY ACTIVATE (POWER OUTLET)
UPPER AND LOWER AIR OUTLET
HEATED SEAT HIGH
WINDOW LIFT
TIRE PRESSURE MONITOR
HILL DESCENT CONTROL
BRAKE
BRAKE SYSTEM WARNING PARKING BRAKE
FUEL FILL SIDE
REAR WINDOW WASHER
WINDSHIELD WASHER FLUID LEVEL
DOME LIGHT
FRONT FOG LIGHT
HOOD RELEASE
LOWER AIR OUTLET
RECIRCULATION
CONVERTIBLE 4 WINDOW DOWN
ELECTRONIC STABILITY CONTROL
AWD!
ALL WHEEL DRIVE
ABS
ENGINE OIL
REAR WINDOW DEFROST
WINDSHIELD, ELECTRICALLY HEATED
PARK LIGHTS
REAR FOG LAMP
LIFTGATE RELEASE AND LIFTGATE OPEN
UPPER AND LOWER AIR OUTLET
VENTILATING FAN
WINDOW LOCK
ELECTRONIC THROTTLE CONTROL
4WD!
FOUR WHEEL DRIVE
BRAKE
BRAKE SYSTEM WARNING PARKING BRAKE
BATTERY CHARGING
HEATED MIRROR
WINDSHIELD DEFROST
INSTRUMENT PANEL ILLUMINATION
SEAT BELT
SLIDING DOOR
TRUNK / DECK RELEASE
AIR CONDITIONING
CHILD SEAT TETHER ANCHOR
VOICE RECOGNITION BUTTON
WARNING
TOW/ HAUL
TOW / HAUL
GLOW PLUG
POWER STEERING FLUID
WINDSHIELD WIPER AND WASHER
SIDE AIRBAG
AIRBAG
SLIDING DOOR
EMERGENCY RELEASE HANDLE
LIGHTER
LOWER ANCHORS AND TETHER FOR CHILDREN (LATCH)
UCONNECT™ BUTTON
HAZARD
4 LOW
FOUR WHEEL DRIVE LOW
MALFUNCTION INDICATOR LIGHT
TRANS OIL TEMP
ENGINE COOLANT TEMPERATURE
SRS AIRBAG
SUPPLEMENTAL RESTRAINT SYSTEM
PASSENGER AIRBAG OFF
DOOR AJAR
CONVERTIBLE TOP DOWN
CONVERTIBLE TOP UP
HORN
SEE OWNER'S MANUAL ISO
A/C PUSH
AIR CONDITIONER
OFF
ELECTRONIC STABILITY CONTROL OFF

010533317

WARNINGS AND CAUTIONS

This Owner's Manual contains **WARNINGS** against operating procedures that could result in a collision or bodily injury. It also contains **CAUTIONS** against procedures that could result in damage to your vehicle. If you do not read this entire manual, you may miss important information. Observe all Warnings and Cautions.

VEHICLE IDENTIFICATION NUMBER

The Vehicle Identification Number (VIN) is on the left front corner of the instrument panel. The VIN is visible from outside of the vehicle through the windshield. This number also appears on the Automobile Information Disclosure Label affixed to a window on your vehicle, the vehicle registration, and the title.

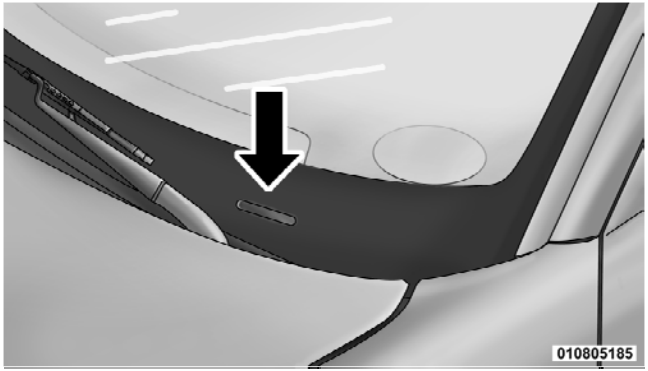

VIN Location

The vehicle identification number (VIN) is also located on the right front strut tower inside the engine compartment.

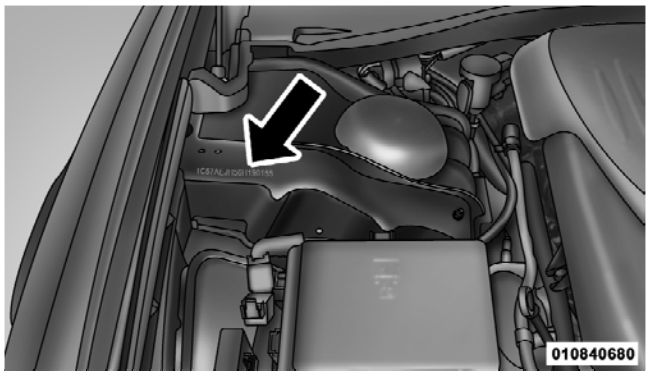

NOTE: It is illegal to remove or alter the VIN.

VEHICLE MODIFICATIONS/ALTERATIONS

WARNING!

Any modifications or alterations to this vehicle could seriously affect its roadworthiness and safety and may lead to a collision resulting in serious injury or death.

THINGS TO KNOW BEFORE STARTING YOUR VEHICLE

CONTENTS

- A Word About Your Keys 12
  - Keyless Ignition Node (KIN) 12
  - Key Fob 14
  - Ignition Or Accessory On Message 15
- Sentry Key® 16
  - Replacement Keys 17
  - Customer Key Programming 18
  - General Information 18
- Vehicle Security Alarm — If Equipped 18
  - Rearming Of The System 18
  - To Arm The System 19
  - To Disarm The System 19
- Illuminated Entry — If Equipped 21
- Remote Keyless Entry (RKE) 21
  - To Unlock The Doors 22
  - To Lock The Doors 23
  - To Unlatch The Trunk 24
  - Using The Panic Alarm 24

- □ Programming Additional Transmitters 24
- □ Transmitter Battery Replacement 25
- □ General Information 26

■ Remote Starting System — If Equipped 26

- □ How To Use Remote Start 27

■ Door Locks 29

- □ Manual Door Locks 29
- □ Power Door Locks 31
- □ Child-Protection Door Lock System — Rear Doors 32

■ Keyless Enter-N-Go™ 34

■ Windows 38

- □ Power Windows 38
- □ Wind Buffeting 41

■ Trunk Lock And Release 41

■ Trunk Safety Warning 42

- □ Trunk Emergency Release 43

■ Occupant Restraints 43

- □ Lap/Shoulder Belts 47
- □ Lap/Shoulder Belt Untwisting Procedure 52
- □ Seat Belts In Passenger Seating Positions 52
- □ Automatic Locking Retractor Mode (ALR) — If Equipped 53
- □ Energy Management Feature 54
- □ Seat Belt Pretensioner 54
- □ Enhanced Seat Belt Use Reminder System (BeltAlert®) 55

□ Seat Belts And Pregnant Women 56
□ Seat Belt Extender 56
□ Supplemental Restraint System (SRS) — Air Bags 56
□ Air Bag Deployment Sensors And Controls . . . 62
□ Event Data Recorder (EDR) 70
□ Child Restraints 71
■ Engine Break-In Recommendations 81
■ Safety Tips 82
□ Transporting Passengers 82
□ Exhaust Gas 83
□ Safety Checks You Should Make Inside The Vehicle 84
□ Periodic Safety Checks You Should Make Outside The Vehicle 86

A WORD ABOUT YOUR KEYS

Your vehicle uses a keyless ignition system. This system consists of a Key Fob with Remote Keyless Entry (RKE) transmitter and a Keyless Ignition Node (KIN).

Keyless Enter-N-Go Feature

This vehicle is equipped with the Keyless Enter-N-Go feature, refer to "Starting Procedure" in "Starting And Operating" for further information.

Keyless Ignition Node (KIN)

This feature allows the driver to operate the ignition switch with the push of a button, as long as the Remote Keyless Entry (RKE) transmitter is in the passenger compartment.

The Keyless Ignition Node (KIN) has four operating positions, three of which are labeled and will illuminate when in position. The three positions are OFF, ACC, and ON/RUN. The fourth position is START, during start RUN will illuminate.

NOTE: In case the ignition switch does not change with the push of a button, the RKE transmitter (Key Fob) may have a low or dead battery. In this situation a back up method can be used to operate the ignition switch. Put the nose side (side opposite of the emergency key) of the Key Fob against the ENGINE START/STOP button and push to operate the ignition switch.

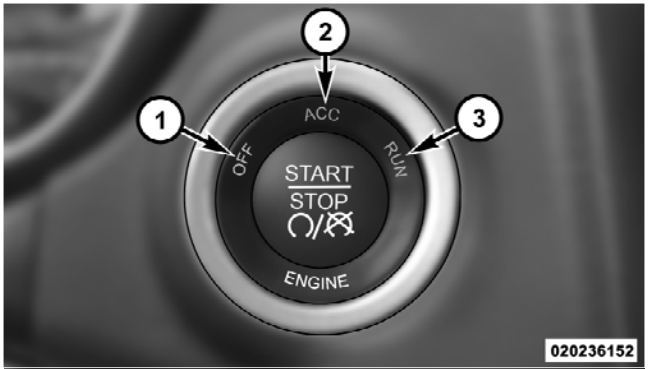

Keyless Ignition Node (KIN)

1 — OFF
2 — ACC (ACCESSORY)
3 — ON/RUN

Key Fob

The Key Fob also contains the Remote Keyless Entry (RKE) transmitter and an emergency key, which stores in the rear of the Key Fob.

The emergency key allows for entry into the vehicle should the battery in the vehicle or the Key Fob go dead. The emergency key is also for locking the glove box. You can keep the emergency key with you when valet parking.

To remove the emergency key, slide the mechanical latch on the back of the Key Fob sideways with your thumb and then pull the key out with your other hand.

020241333

Emergency Key Removal

NOTE: You can insert the double-sided emergency key into the lock cylinders with either side up.

Ignition Or Accessory On Message

Opening the driver's door when the ignition is in ACC or ON (engine not running), a chime will sound to remind you to cycle the ignition to OFF. In addition to the chime, the ignition or accessory on message will display in the cluster.

NOTE: With the Uconnect Touch™ system, the power window switches, radio, power sunroof (if equipped), and power outlets will remain active for up to 10 minutes after the ignition is cycled to the OFF position. Opening either front door will cancel this feature. The time for this feature is programmable. Refer to "Uconnect Touch™ Settings" in "Understanding Your Instrument Panel" for further information.

WARNING!

- **When leaving the vehicle, always remove the key fob from the ignition and lock your vehicle.**
- **Never leave children alone in a vehicle, or with access to an unlocked vehicle.**
- **Allowing children to be in a vehicle unattended is dangerous for a number of reasons. A child or others could be seriously or fatally injured. Children should be warned not to touch the parking brake, brake pedal or the shift lever.**
- **Do not leave the key fob in or near the vehicle, and do not leave Keyless Enter-N-Go in the ACC or ON/RUN mode. A child could operate power windows, other controls, or move the vehicle.**
- **Do not leave children or animals inside parked vehicles in hot weather. Interior heat build-up may cause serious injury or death.**

CAUTION!

An unlocked car is an invitation to thieves. Always remove the Key Fob from vehicle, cycle the ignition OFF and lock all doors when leaving the vehicle unattended.

SENTRY KEY®

The Sentry Key® Immobilizer system prevents unauthorized vehicle operation by disabling the engine. The system does not need to be armed or activated. Operation is automatic, regardless of whether the vehicle is locked or unlocked.

The system uses a Key Fob with Remote Keyless Entry (RKE) transmitter, a Keyless Ignition Node (KIN) and a RF receiver to prevent unauthorized vehicle operation. Therefore, only Key Fobs that are programmed to the vehicle can be used to start and operate the vehicle.

After cycling the ignition to the ON/RUN position, the Vehicle Security Light will turn on for three seconds for a bulb check. If the light remains on after the bulb check, it indicates that there is a problem with the electronics. In addition, if the light begins to flash after the bulb check, it indicates that someone used an invalid Key Fob to start the engine. Either of these conditions will result in the engine being shut off after two seconds.

If the Vehicle Security Light turns on during normal vehicle operation (vehicle running for longer than 10 seconds), it indicates that there is a fault in the electronics. Should this occur, have the vehicle serviced as soon as possible by an authorized dealer.

CAUTION!

The Sentry Key® Immobilizer system is not compatible with some after-market remote starting systems. Use of these systems may result in vehicle starting problems and loss of security protection.

All of the Key Fobs provided with your new vehicle have been programmed to the vehicle electronics.

Replacement Keys

NOTE: Only Key Fobs that are programmed to the vehicle electronics can be used to start and operate the vehicle. Once a Key Fob is programmed to a vehicle, it cannot be programmed to any other vehicle.

CAUTION!

Always remove the keys from the vehicle and lock all doors when leaving the vehicle unattended.

At the time of purchase, the original owner is provided with a four-digit Personal Identification Number (PIN). Keep the PIN in a secure location. This number is required for authorized dealer replacement of Key Fobs. Duplication of Key Fobs may be performed at an authorized dealer, this procedure consists of programming a blank Key Fob to the vehicle electronics. A blank Key Fob is one that has never been programmed.

NOTE: When having the Sentry Key® Immobilizer system serviced, bring all vehicle Key Fobs with you to an authorized dealer.

Customer Key Programming

Programming Key Fobs or RKE transmitters may be performed at an authorized dealer.

General Information

The Sentry Key® system complies with FCC rules Part 15 and with RSS-210 of Industry Canada. Operation is subject to the following conditions:

- This device may not cause harmful interference.
- This device must accept any interference that may be received, including interference that may cause undesired operation.

VEHICLE SECURITY ALARM — IF EQUIPPED

The Vehicle Security Alarm monitors the vehicle doors for unauthorized entry and the Keyless Enter-N-Go Start/Stop button for unauthorized operation. While the Vehicle Security Alarm is armed, interior switches for door locks and decklid release are disabled. If something triggers the alarm, the Vehicle Security Alarm will provide the following audible and visible signals: the horn will pulse, the park lamps and/or turn signals will flash, and the Vehicle Security Light in the instrument cluster will flash.

Rearming Of The System

If something triggers the alarm, and no action is taken to disarm it, the Vehicle Security Alarm will turn the horn off after three minutes, turn all of the visual signals off after 15 additional minutes, and then the Vehicle Security Alarm will rearm itself.

To Arm The System

Follow these steps to arm the Vehicle Security Alarm:

1. Remove the key from the ignition system (refer to "Starting Procedures" in "Starting And Operating" for further information).

• For vehicles equipped with Keyless Enter-N-Go, make sure the vehicle ignition system is "OFF".

• For vehicles not equipped with Keyless Enter-N-Go, make sure the vehicle ignition system is "OFF" and the key is physically removed from the ignition.

2. Perform one of the following methods to lock the vehicle:

• Press LOCK on the interior power door lock switch with the driver and/or passenger door open.

• Press the LOCK button on the exterior Passive Entry Door Handle with a valid Key Fob available in the same exterior zone (refer to "Keyless Enter-N-Go" in "Things To Know Before Starting Your Vehicle" for further information).

• Press the LOCK button on the Remote Keyless Entry (RKE) transmitter.

3. If any doors are open, close them.

To Disarm The System

The Vehicle Security Alarm can be disarmed using any of the following methods:

- Press the UNLOCK button on the Remote Keyless Entry (RKE) transmitter.
- Grasp the Passive Entry Unlock Door Handle (if equipped, refer to "Keyless Enter-N-Go" in "Things To Know Before Starting Your Vehicle" for further information).

- Cycle the vehicle ignition system out of the OFF position.
  - For vehicles equipped with Keyless Enter-N-Go, press the Keyless Enter-N-Go Start/Stop button (requires at least one valid Key Fob in the vehicle).
  - For vehicles not equipped with Keyless Enter-N-Go, insert a valid key into the ignition switch and turn the key to the ON position.

NOTE:

- The driver's door key cylinder and the trunk button on the RKE transmitter cannot arm or disarm the Vehicle Security Alarm.
- When the Vehicle Security Alarm is armed, the interior power door lock switches will not unlock the doors.

The Vehicle Security Alarm is designed to protect your vehicle; however, you can create conditions where the system will give you a false alarm. If one of the previously described arming sequences has occurred, the Vehicle Security Alarm will arm regardless of whether you are in the vehicle or not. If you remain in the vehicle and open a door, the alarm will sound. If this occurs, disarm the Vehicle Security Alarm.

If the Vehicle Security Alarm is armed and the battery becomes disconnected, the Vehicle Security Alarm will remain armed when the battery is reconnected; the exterior lights will flash, the horn will sound. If this occurs, disarm the Vehicle Security Alarm.

Tamper Alert

If something has triggered the Vehicle Security Alarm in your absence, the horn will sound three times when you disarm the Vehicle Security Alarm. Check the vehicle for tampering.

ILLUMINATED ENTRY — IF EQUIPPED

The courtesy lights will turn on when you use the Remote Keyless Entry (RKE) transmitter to unlock the doors or open any door.

This feature also turns on the approach lighting in the outside mirrors (if equipped). Refer to "Mirrors" in "Understanding The Features Of Your Vehicle" for further information.

The lights will fade to off after approximately 30 seconds or they will immediately fade to off once the ignition is cycled to the ON/RUN position from the OFF position.

NOTE:

- The front courtesy overhead console and door courtesy lights will turn on if the dimmer control is in the "Dome ON" position (extreme top position).
- The Illuminated Entry system will not operate if the dimmer control is in the "Dome defeat" position (extreme bottom position).

REMOTE KEYLESS ENTRY (RKE)

The RKE system allows you to lock or unlock the doors, open the trunk, or activate the Panic Alarm from distances up to approximately 66 ft (20 m) using a hand-held Key Fob with RKE transmitter. The RKE transmitter does not need to be pointed at the vehicle to activate the system.

NOTE: Driving at speeds 5 mph (8 km/h) and above disables the system from responding to all RKE transmitter buttons for all RKE transmitters.

021341332

Key Fob With RKE Transmitter

To Unlock The Doors

Press and release the UNLOCK button on the RKE transmitter once to unlock the driver's door or twice within five seconds to unlock all doors. The turn signal lights will flash to acknowledge the unlock signal. The illuminated entry system will also turn on.

If the vehicle is equipped with Passive Entry, refer to "Keyless Enter-N-Go" under "Things To Know Before Starting Your Vehicle" for further information.

Remote Key Unlock, Driver Door/All Doors 1st Press

This feature lets you program the system to unlock either the driver's door or all doors on the first press of the UNLOCK button on the RKE transmitter. To change the current setting, refer to "Uconnect Touch™ Settings" in "Understanding Your Instrument Panel" for further information.

Flash Lights With Lock

This feature will cause the turn signal lights to flash when the doors are locked or unlocked with the RKE transmitter. This feature can be turned on or turned off. To change the current setting, refer to "Uconnect Touch™ Settings" in "Understanding Your Instrument Panel" for further information.

Turn Headlights On With Remote Key Unlock

This feature activates the headlights for up to 90 seconds when the doors are unlocked with the RKE transmitter. The time for this feature is programmable on vehicles equipped through Uconnect Touch™. To change the current setting, refer to "Uconnect Touch™ Settings" in "Understanding Your Instrument Panel" for further information.

To Lock The Doors

Press and release the LOCK button on the RKE transmitter to lock all doors. The turn signal lights will flash and the horn will chirp to acknowledge the signal.

If the vehicle is equipped with Passive Entry, refer to "Keyless Enter-N-Go" under "Things To Know Before Starting Your Vehicle" for further information.

Sound Horn With Remote Key Lock

This feature will cause the horn to chirp when the doors are locked with the RKE transmitter. This feature can be turned on or turned off. To change the current setting, refer to "Uconnect Touch™ Settings" in "Understanding Your Instrument Panel" for further information.

To Unlatch The Trunk

Press the TRUNK button on the RKE transmitter two times within five seconds to unlatch the trunk.

If the vehicle is equipped with Passive Entry, refer to "Keyless Enter-N-Go" under "Things To Know Before Starting Your Vehicle" for further information.

Using The Panic Alarm

To turn the Panic Alarm feature on or off, press and hold the PANIC button on the RKE transmitter for at least one second and release. When the Panic Alarm is on, the headlights will turn on, the park lights will flash, the horn will pulse on and off, and the interior lights will turn on.

The Panic Alarm will stay on for three minutes unless you turn it off by either pressing the PANIC button a second time or drive the vehicle at a speed of 15 mph (24 km/h) or greater.

NOTE:

- The interior lights will turn off if you cycle the ignition switch to the ACC or ON/RUN position while the Panic Alarm is activated. However, the exterior lights and horn will remain on.
- You may need to be less than 35 ft (11 m) from the vehicle when using the RKE transmitter to turn off the Panic Alarm due to the radio frequency noises emitted by the system.

Programming Additional Transmitters

Programming Key Fobs or RKE transmitters may be performed at an authorized dealer.

Transmitter Battery Replacement

The recommended replacement battery is one CR2032 battery.

NOTE:

- Perchlorate Material — special handling may apply. See www.dtsc.ca.gov/hazardouswaste/perchlorate
- Do not touch the battery terminals that are on the back housing or the printed circuit board.

1. Remove the emergency key by sliding the mechanical latch on the back of the RKE transmitter sideways with your thumb and then pull the key out with your other hand.

2. Insert the tip of the emergency key or a #2 flat blade screwdriver into the slot and gently pry the two halves of the RKE transmitter apart. Make sure not to damage the seal during removal.

021337430

3. Remove the battery by turning the back cover over (battery facing downward) and tapping it lightly on a solid surface such as a table or similar, then replace the battery. When replacing the battery, match the + sign on the battery to the + sign on the inside of the battery clip, located on the back cover. Avoid touching the new battery with your fingers. Skin oils may cause battery deterioration. If you touch a battery, clean it with rubbing alcohol.

4. To assemble the RKE transmitter case, snap the two halves together.

General Information

This device complies with Part 15 of the FCC rules and RSS 210 of Industry Canada. Operation is subject to the following conditions:

- This device may not cause harmful interference.
- This device must accept any interference received, including interference that may cause undesired operation.

NOTE: Changes or modifications not expressly approved by the party responsible for compliance could void the user's authority to operate the equipment.

If your RKE transmitter fails to operate from a normal distance, check for these two conditions:

1. A weak battery in the RKE transmitter. The expected life of the battery is a minimum of three years.

2. Closeness to a radio transmitter such as a radio station tower, airport transmitter, and some mobile or CB radios.

REMOTE STARTING SYSTEM — IF EQUIPPED

This system uses the Key Fob with Remote Keyless Entry (RKE) transmitter to start the engine conveniently from outside the vehicle while still maintaining security. The system has a range of approximately 300 ft (91 m).

NOTE:

- The vehicle must be equipped with an automatic transmission to be equipped with Remote Start.
- Obstructions between the vehicle and the Key Fob may reduce this range.

How To Use Remote Start

All of the following conditions must be met before the engine will remote start:

- Shift lever in PARK
- Doors closed
- Hood closed
- Trunk closed
- HAZARD switch off
- BRAKE switch inactive (brake pedal not pressed)
- Battery at an acceptable charge level
- RKE PANIC button not pressed.
- System not disabled from previous remote start event
- Vehicle theft alarm not active
- Ignition in OFF position

WARNING!

- **Do not start or run an engine in a closed garage or confined area. Exhaust gas contains Carbon Monoxide (CO) which is odorless and colorless. Carbon Monoxide is poisonous and can cause serious injury or death when inhaled.**
- **Keep Remote Keyless Entry (RKE) transmitters away from children. Operation of the Remote Start System, windows, door locks or other controls could cause serious injury or death.**

Remote Start Abort Message On Electronic Vehicle Information Center (EVIC) — If Equipped

The following messages will display in the EVIC if the vehicle fails to remote start or exits remote start prematurely:

- Remote Start Aborted — Door Ajar
- Remote Start Aborted — Hood Ajar
- Remote Start Aborted — Trunk Ajar
- Remote Start Aborted — Fuel Low
- Remote Start Disabled — Start Vehicle To Reset

The EVIC message stays active until the ignition is cycled to the ON/RUN position.

To Enter Remote Start Mode

Press and release the REMOTE START button on the RKE transmitter twice within five seconds. The vehicle doors will lock, parking lights will flash and the horn will chirp twice (if programmed). Then, the engine will start and the vehicle will remain in the Remote Start mode for a 15-minute cycle.

NOTE:

- If an engine fault is present or fuel level is low, the vehicle will start and then shut down in 10 seconds.
- The park lamps will turn on and remain on during Remote Start mode.
- For security, power window and power sunroof operation (if equipped) are disabled when the vehicle is in the Remote Start mode.
- The engine can be started two consecutive times (two 15-minute cycles) with the RKE transmitter. However, the ignition must be cycled to the RUN position before you can repeat the start sequence for a third cycle.

To Exit Remote Start Mode Without Driving The Vehicle

Press and release the REMOTE START button one time or allow the engine to run for the entire 15 minute cycle.

NOTE: To avoid unintentional shutdowns, the system will disable the one time press of the REMOTE START button for two seconds after receiving a valid Remote Start request.

To Exit Remote Start Mode And Drive The Vehicle

Before the end of 15 minute cycle, press and release the UNLOCK button on the RKE transmitter to unlock the doors and disarm the Vehicle Security Alarm (if equipped). Then, prior to the end of the 15 minute cycle, press and release the START/STOP button.

NOTE: The message "Push Start Button" will display in the EVIC until you push the START button.

DOOR LOCKS

Manual Door Locks

To lock each door, push the door lock knob on each door trim panel downward. To unlock the front doors, pull the inside door handle to the first detent. To unlock the rear doors, pull the door lock knob on the door trim panel upward.

Door Lock Knob

If the door lock knob is down when you shut the door, the door will lock. Therefore, make sure the Key Fob is not inside the vehicle before closing the door.

WARNING!

- **For personal security and safety in the event of an accident, lock the vehicle doors before you drive as well as when you park and leave the vehicle.**
- **Never leave children alone in a vehicle, or with access to an unlocked vehicle.**
- **Allowing children to be in a vehicle unattended is dangerous for a number of reasons. A child or others could be seriously or fatally injured. Children should be warned not to touch the parking brake, brake pedal or the shift lever.**

(Continued)

WARNING! (Continued)

- **Do not leave the key fob in or near the vehicle, and do not leave Keyless Enter-N-Go in the ACC or ON/RUN mode. A child could operate power windows, other controls, or move the vehicle.**

Power Door Locks

A power door lock switch is on each front door trim panel. Use this switch to lock or unlock the doors.

Power Door Lock Switch

The doors can also be locked and unlocked with the Keyless Enter-N-Go (Passive Entry) system. For further information, refer to “Keyless Enter-N-Go” in “Things To Know Before Starting Your Vehicle”.

If you press the power door lock switch while the ignition is in the ACC or ON/RUN position, and any front door is open, the power locks will not operate. This prevents you from accidentally locking the Key Fob in the vehicle. Cycling the ignition to the OFF position or closing the door will allow the locks to operate. If a door is open, and the ignition is in the ACC or ON/RUN position, a chime will sound as a reminder to remove the Key Fob.

Automatic Door Locks — If Equipped
The auto door lock feature default condition is enabled. When enabled, the door locks will lock automatically when the vehicle's speed exceeds 15 mph (24 km/h). The auto door lock feature can be enabled or disabled by your authorized dealer. Please see your authorized dealer for service.

Automatic Unlock Doors On Exit
The doors will unlock automatically on vehicles with power door locks if:

1. The Automatic Unlock Doors On Exit feature is enabled.

2. The transmission was in gear and the vehicle speed returned to 0 mph (0 km/h).

3. The transmission is in NEUTRAL or PARK.

4. The driver door is opened.

5. The doors were not previously unlocked.

6. The vehicle speed is 0 mph (0 km/h).

Automatic Unlock Doors On Exit Programming
To change the current setting, refer to "Uconnect Touch™ Settings" in "Understanding Your Instrument Panel" for further information.

NOTE: Use the Automatic Unlock Doors On Exit feature in accordance with local laws.

Child-Protection Door Lock System — Rear Doors

To provide a safer environment for small children riding in the rear seats, the rear doors are equipped with Child-Protection Door Lock system.

To Engage Or Disengage The Child-Protection Door Lock System

1. Open the rear door.

2. Insert the tip of the emergency key into the lock and rotate to the LOCK or UNLOCK position.

3. Repeat steps 1 and 2 for the opposite rear door.

Child-Protection Door Lock Function

WARNING!

Avoid trapping anyone in a vehicle in a collision. Remember that the rear doors can only be opened from the outside when the Child-Protection locks are engaged (locked).

NOTE: For emergency exit from the rear seats when the Child-Protection Door Lock System is engaged, manually raise the door lock knob to the unlocked position, roll down the window, and open the door using the outside door handle.

KEYLESS ENTER-N-GO™

The Passive Entry system is an enhancement to the vehicle's Remote Keyless Entry (RKE) system and a feature of Keyless Enter-N-Go™. This feature allows you to lock and unlock the vehicle's door(s) without having to press the RKE transmitter lock or unlock buttons.

NOTE:

- Passive Entry may be programmed ON/OFF; refer to "Uconnect Touch™ Settings" in "Understanding Your Instrument Panel" for further information.
- If wearing gloves on your hands, or if it has been raining on the Passive Entry door handle, the unlock sensitivity can be affected, resulting in a slower response time.
- If the vehicle is unlocked by the RKE transmitter or Passive Entry and no door goes ajar within 60 seconds, the vehicle will re-lock and if equipped will arm the theft alarm.

To Unlock From The Driver's Side:

With a valid Passive Entry RKE transmitter within 5 ft (1.5 m) of the driver's door handle, grab the front driver door handle to unlock the driver's door automatically. The interior door panel lock knob will raise when the door is unlocked.

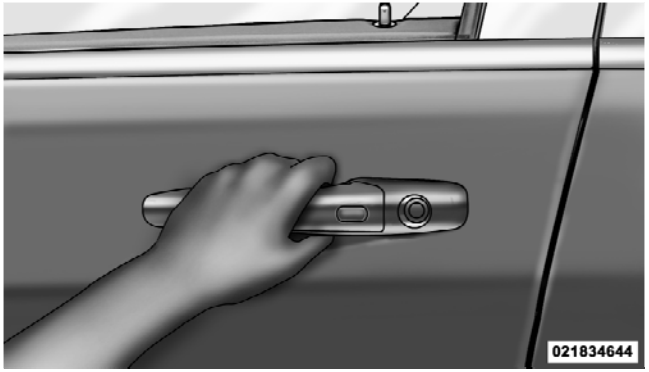

Grabbing The Driver's Door Handle

NOTE: If "Unlock All Doors 1st Press" is programmed all doors will unlock when you grab hold of the front driver's door handle. To select between "Unlock Driver Door 1st Press" and "Unlock All Doors 1st Press", refer to "Uconnect Touch™ Settings" in "Understanding Your Instrument Panel" for further information.

To Unlock From The Passenger Side:
With a valid Passive Entry RKE transmitter within 5 ft (1.5 m) of the passenger door handle, grab the front passenger door handle to unlock all four doors automatically. The interior door panel lock knob will raise when the door is unlocked.

NOTE: All doors will unlock when the front passenger door handle is grabbed regardless of the driver's door unlock preference setting ("Unlock Driver Door 1st Press" or "Unlock All Doors 1st Press").

Preventing Inadvertent Locking Of Passive Entry RKE Transmitter In Vehicle
To minimize the possibility of unintentionally locking a Passive Entry RKE transmitter inside your vehicle, the Passive Entry system is equipped with an automatic door unlock feature which will function if the ignition switch is in the OFF position.

If one of the vehicle doors is open and the door panel switch is used to lock the vehicle, once all open doors have been closed the vehicle checks the inside and outside of the vehicle for any valid Passive Entry RKE transmitters. If one of the vehicle's Passive Entry RKE transmitters is detected inside the vehicle, and no other valid Passive Entry RKE transmitters are detected outside the vehicle, the Passive Entry System automatically unlocks all vehicle doors and chirps the horn three times (on the third attempt ALL doors will lock and the Passive Entry RKE transmitter can be locked in the vehicle).

NOTE: The vehicle will only unlock the doors when the doors are locked using the door panel switch, a valid Passive Entry RKE transmitter is detected inside the vehicle, and no valid Passive Entry RKE transmitter is detected outside the vehicle. The vehicle will not unlock the doors when any of the following conditions are true:

- The doors are locked using the RKE transmitter.
- The doors are locked using the LOCK button on the Passive Entry door handles.
- The doors are manually locked using the door lock knobs.
- There is a valid Passive Entry RKE transmitter outside the vehicle and within 5 ft (1.5 m) of either Passive Entry door handle.
- Three attempts are made to lock the doors using the door panel switch and then close the doors.

To Enter The Trunk

With a valid Passive Entry RKE transmitter within 3 ft (1.0 m) of the deck lid, press the button on the right side of CHMSL, (Center High Mounted Stop Light) which is located on the deck lid.

Trunk Passive Entry Button

NOTE: If you inadvertently leave your vehicle's Passive Entry RKE transmitter in the trunk and try to close the deck lid, the deck lid will automatically unlatch, unless another one of the vehicle's Passive Entry RKE transmitters is outside the vehicle and within 3 ft (1.0 m) of the deck lid.

To Lock The Vehicle's Doors

With one of the vehicle's Passive Entry RKE transmitters within 5 ft (1.5 m) of the driver or passenger front door handles, press the door handle LOCK button to lock all four doors.

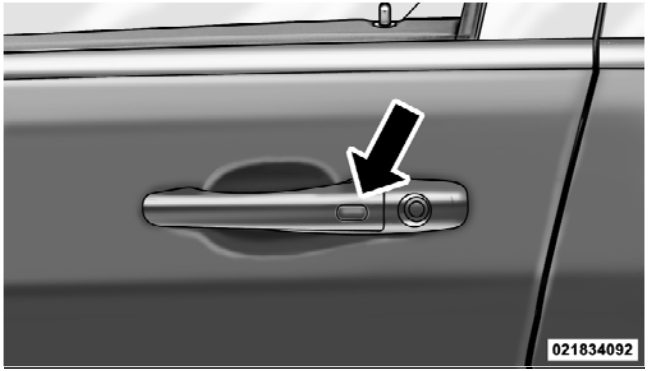

Outside Door Handle Lock Button

NOTE:

- After pressing the door handle LOCK button, you must wait two seconds before you can lock or unlock the doors, using either Passive Entry door handle. This is done to allow you to check if the vehicle is locked by pulling the door handle, without the vehicle reacting and unlocking.
- The Passive Entry system will not operate if the RKE transmitter battery is dead.

The vehicle doors can also be locked by using the RKE transmitter lock button or the lock button located on the vehicle's interior door panel.

WINDOWS

Power Windows

The window controls on the driver's door control all the door windows.

Power Window Switches

There are single window controls on each passenger door trim panel, which operate the passenger door windows. The window controls will operate only when the ignition is in the ACC or ON/RUN position.

NOTE: For vehicles equipped with the Uconnect Touch™, the power window switches will remain active for up to 10 minutes after the ignition is cycled to the OFF position. Opening either front door will cancel this feature. The time is programmable. Refer to "Uconnect Touch™ Settings" in "Understanding Your Instrument Panel" for further information.

WARNING!

Never leave children in a vehicle with the Key Fob. Occupants, particularly unattended children, can become entrapped by the windows while operating the power window switches. Such entrapment may result in serious injury or death.

AUTO-Down Feature

The driver door power window switch and some model passenger door power window switches have an AUTO-down feature. Press the window switch to the second detent, release, and the window will go down automatically.

To open the window part way, press the window switch to the first detent and release it when you want the window to stop.

To stop the window from going all the way down during the AUTO-down operation, pull up on the switch briefly.

AUTO-Up Feature With Anti-Pinch Protection — If Equipped

Lift the window switch to the second detent, release, and the window will go up automatically.

To stop the window from going all the way up during the AUTO-up operation, push down on the switch briefly.

To close the window part way, lift the window switch to the first detent and release it when you want the window to stop.

NOTE:

- If the window runs into any obstacle during auto-closure, it will reverse direction and then go back down. Remove the obstacle and use the window switch again to close the window.
- Any impact due to rough road conditions may trigger the auto-reverse function unexpectedly during auto-closure. If this happens, pull the switch lightly to the first detent and hold to close the window manually.

WARNING!

There is no anti-pinch protection when the window is almost closed. Be sure to clear all objects from the window before closing.

Reset Auto Up

Should the Auto Up feature stop working, the window probably needs to be reset. To reset Auto Up:

1. Pull the window switch up to close the window completely and continue to hold the switch up for an additional two seconds after the window is closed.

2. Push the window switch down firmly to the second detent to open the window completely and continue to hold the switch down for an additional two seconds after the window is fully open.

Window Lockout Switch

The window lockout switch on the driver's door trim panel allows you to disable the window controls on the rear passenger doors and the rear sunscreen (if equipped). To disable the window controls and the rear sunscreen, press and release the window lockout button (setting it in the DOWN position). To enable the window

controls and the rear sunscreen, press and release the window lockout button again (setting it in the UP position).

Window Lockout Switch

Wind Buffeting

Wind buffeting can be described as the perception of pressure on the ears or a helicopter-type sound in the ears. Your vehicle may exhibit wind buffeting with the windows down, or the sunroof (if equipped) in certain open or partially open positions. This is a normal occurrence and can be minimized. If the buffeting occurs with the rear windows open, then open the front and rear windows together to minimize the buffeting. If the buffeting occurs with the sunroof open, then adjust the sunroof opening to minimize the buffeting.

TRUNK LOCK AND RELEASE

The trunk lid can be released from inside the vehicle by pressing the TRUNK RELEASE button located on the instrument panel to the left of the steering wheel.

NOTE: The transmission must be in PARK before the button will operate.

81ac2fd7

Trunk Release Button

The trunk lid can be released from outside the vehicle by pressing the TRUNK button on the Remote Keyless Entry (RKE) transmitter twice within five seconds or by using the external release switch located on the underside of the decklid overhang. The release feature will function only when the vehicle is in the unlock condition.

With the ignition in the ON/RUN position, the Trunk Open symbol will display in the instrument cluster indicating that the trunk is open. The odometer display will reappear once the trunk is closed.

With the ignition in the OFF position, the Trunk Open symbol will display until the trunk is closed.

Refer to "Keyless Enter-N-Go" in "Things To Know Before Starting Your Vehicle" for more information on trunk operation with the Passive Entry feature.

TRUNK SAFETY WARNING

WARNING!

Do not allow children to have access to the trunk, either by climbing into the trunk from outside, or through the inside of the vehicle. Always close the trunk lid when your vehicle is unattended. Once in the trunk, young children may not be able to escape, even if they entered through the rear seat. If trapped in the trunk, children can die from suffocation or heat stroke.

Trunk Emergency Release

As a security measure, a trunk internal emergency release lever is built into the trunk latching mechanism. In the event of an individual being locked inside the trunk, the trunk can be simply opened by pulling on the glow-in-the-dark handle attached to the trunk latching mechanism.

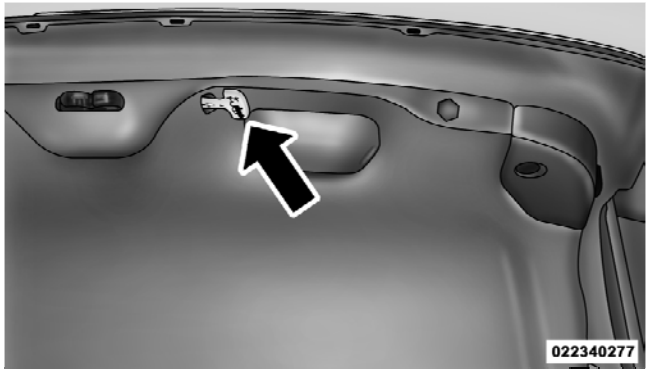

Trunk Emergency Release

OCCUPANT RESTRAINTS

Some of the most important safety features in your vehicle are the restraint systems:

- Three-point lap and shoulder belts for the driver and all passengers
- Advanced Front Air Bags for driver and front passenger
- Supplemental Driver Side Knee Air Bag
- Supplemental Side Air Bag Inflatable Curtains (SABIC) for the driver and passengers seated next to a window
- Supplemental Seat-Mounted Side Air Bags (SAB)
- An energy-absorbing steering column and steering wheel
- Knee bolsters/blockers for front seat occupant

- Front seat belts incorporate pretensioners that may enhance occupant protection by managing occupant energy during an impact event

Please pay close attention to the information in this section. It tells you how to use your restraint system properly, to keep you and your passengers as safe as possible.

If you will be carrying children too small for adult-sized seat belts, the seat belts or the Lower Anchors and Tether for CHildren (LATCH) feature also can be used to hold infant and child restraint systems. For more information on LATCH, refer to Lower Anchors and Tether for CHildren (LATCH).

NOTE: The Advanced Front Air Bags have a multistage inflator design. This allows the air bag to have different rates of inflation based on several factors, including the severity and type of collision.

Here are some simple steps you can take to minimize the risk of harm from a deploying air bag:

1. **Children 12 years old and under should always ride buckled up in a rear seat.**

WARNING!

Infants in rear facing child restraints should never ride in the front seat of a vehicle with a passenger Advanced Front Air Bag. An air bag deployment can cause severe injury or death to infants in that position.

Children that are not big enough to wear the vehicle seat belt properly (see section on Child Restraints) should be secured in the rear seat in child restraints or belt-positioning booster seats. Older children who do not use child restraints or belt-positioning booster seats should ride properly buckled up in the rear seat. Never allow children to slide the shoulder belt behind them or under their arm.

If a child from 1 to 12 years old (not in a rear facing child seat) must ride in the front passenger seat, move the seat as far back as possible and use the proper child restraint. (Refer to "Child Restraints")

You should read the instructions provided with your child restraint to make sure that you are using it properly.

2. **All occupants should always wear their lap and shoulder belts properly.**

3. **The driver and front passenger seats should be moved back as far as practical to allow the Advanced Front Air Bags room to inflate.**

4. **Do not lean against the door or window. Your vehicle has Supplemental Side Air Bag Inflatable Curtains (SABIC) or Supplemental Seat-Mounted Side Air Bags (SAB), and when deployment occurs, the SABIC and SAB air bags will inflate forcefully into the space between you and the door.**

5. **If the air bag system in this vehicle needs to be modified to accommodate a disabled person, contact the Customer Center. Phone numbers are provided under "If You Need Assistance".**

WARNING!

- **Relying on the air bags alone could lead to more severe injuries in a collision. The air bags work with your seat belt to restrain you properly. In some collisions, the air bags won't deploy at all. Always wear your seat belts even though you have air bags.**

(Continued)

WARNING! (Continued)

- **Being too close to the steering wheel or instrument panel during Advanced Front Air Bag deployment could cause serious injury, including death. Air Bags need room to inflate. Sit back, comfortably extending your arms to reach the steering wheel or instrument panel.**
- **Supplemental Side Air Bag Inflatable Curtain (SABIC) and Seat-Mounted Side Air Bags (SAB) also need room to inflate. Do not lean against the door or window. Sit upright in the center of the seat.**
- **In a collision, you and your passengers can suffer much greater injuries if you are not properly buckled up. You can strike the interior of your vehicle or other passengers, or you can be thrown out of the vehicle. Always be sure you and others in your vehicle are buckled up properly.**

Buckle up even though you are an excellent driver, even on short trips. Someone on the road may be a poor driver and cause a collision that includes you. This can happen far away from home or on your own street.

Research has shown that seat belts save lives, and they can reduce the seriousness of injuries in a collision. Some of the worst injuries happen when people are thrown from the vehicle. Seat belts reduce the possibility of ejection and the risk of injury caused by striking the inside of the vehicle. Everyone in a motor vehicle should be belted at all times.

Lap/Shoulder Belts

All seating positions in your vehicle are equipped with lap/shoulder belts.

The belt webbing retractor is designed to lock during very sudden stops or impacts. This feature allows the shoulder part of the belt to move freely with you under normal conditions. However, in a collision, the belt will lock and reduce your risk of striking the inside of the vehicle or being thrown out.

WARNING!

- **Do not allow people to ride in any area of your vehicle that is not equipped with seats and seat belts.**
- **Be sure everyone in your vehicle is in a seat and using a seat belt properly.**

(Continued)

WARNING! (Continued)

- **Wearing a seat belt incorrectly is dangerous. Seat belts are designed to go around the large bones of your body. These are the strongest parts of your body and can take the forces of a collision best.**
- **Wearing your belt in the wrong place could make your injuries in a collision much worse. You might suffer internal injuries, or you could even slide out of part of the belt. Follow these instructions to wear your seat belt safely and to keep your passengers safe, too.**
- **Two people should never be belted into a single seat belt. People belted together can crash into one another in a collision, hurting one another badly. Never use a lap/shoulder belt or a lap belt for more than one person, no matter what their size.**

Lap/Shoulder Belt Operating Instructions

1. Enter the vehicle and close the door. Sit back and adjust the front seat.

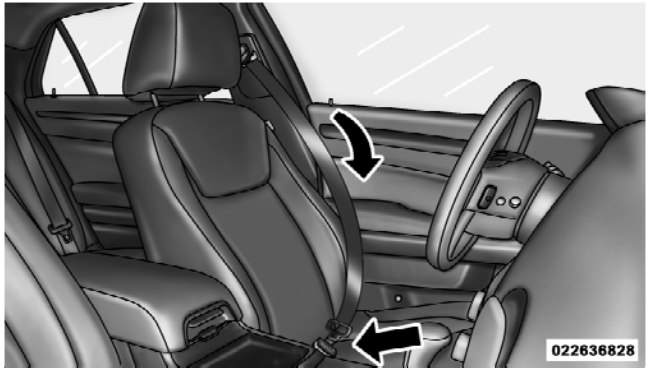

Pulling Out The Lap/Shoulder Belt Latch Plate

2. The seat belt latch plate is above the back of your seat. Grasp the latch plate and pull out the belt. Slide the latch plate up the webbing as far as necessary to make the belt go around your lap.

3. When the belt is long enough to fit, insert the latch plate into the buckle until you hear a "click."

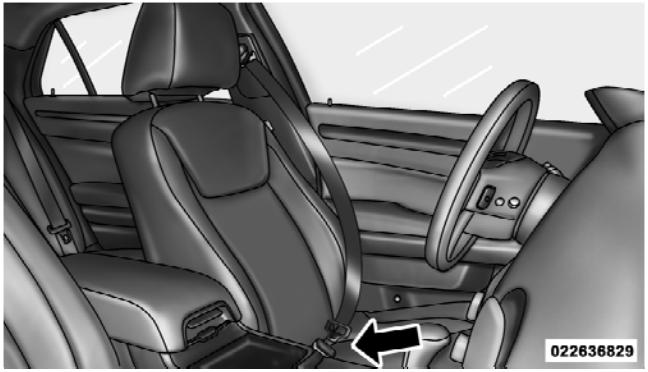

Inserting Latch Plate Into Buckle

WARNING!

- **A belt that is buckled into the wrong buckle will not protect you properly. The lap portion could ride too high on your body, possibly causing internal injuries. Always buckle your belt into the buckle nearest you.**
- **A belt that is too loose will not protect you properly. In a sudden stop, you could move too far forward, increasing the possibility of injury. Wear your seat belt snugly.**

(Continued)

WARNING! (Continued)

- **A belt that is worn under your arm is dangerous. Your body could strike the inside surfaces of the vehicle in a collision, increasing head and neck injury. A belt worn under the arm can cause internal injuries. Ribs aren't as strong as shoulder bones. Wear the belt over your shoulder so that your strongest bones will take the force in a collision.**
- **A shoulder belt placed behind you will not protect you from injury during a collision. You are more likely to hit your head in a collision if you do not wear your shoulder belt. The lap and shoulder belt are meant to be used together.**

4. Position the lap belt across your thighs, below your abdomen. To remove slack in the lap belt portion, pull up a bit on the shoulder belt. To loosen the lap belt if it is too tight, tilt the latch plate and pull on the lap belt. A snug belt reduces the risk of sliding under the belt in a collision.

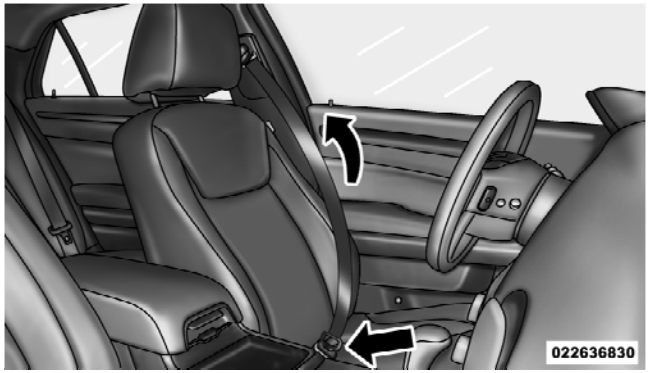

Removing Slack From Belt

WARNING!

- **A lap belt worn too high can increase the risk of internal injury in a collision. The belt forces won't be at the strong hip and pelvic bones, but across your abdomen. Always wear the lap belt as low as possible and keep it snug.**
- **A twisted belt may not protect you properly. In a collision, it could even cut into you. Be sure the belt is straight. If you can't straighten a belt in your vehicle, take it to your authorized dealer immediately and have it fixed.**

5. Position the shoulder belt on your chest so that it is comfortable and not resting on your neck. The retractor will withdraw any slack in the belt.

6. To release the belt, push the red button on the buckle. The belt will automatically retract to its stowed position. If necessary, slide the latch plate down the webbing to allow the belt to retract fully.

WARNING!

A frayed or torn belt could rip apart in a collision and leave you with no protection. Inspect the belt system periodically, checking for cuts, frays, or loose parts. Damaged parts must be replaced immediately. Do not disassemble or modify the system. Seat belt assemblies must be replaced after a collision if they have been damaged (bent retractor, torn webbing, etc.).

Adjustable Upper Shoulder Belt Anchorage

In the driver and front passenger seats, the shoulder belt can be adjusted upward or downward to position the belt away from your neck. Push and fully depress the button above the webbing to release the anchorage, then move it up or down to the position that fits you best.

Adjusting Upper Shoulder Belt

As a guide, if you are shorter than average you will prefer a lower position, and if you are taller than average you will prefer a higher position. When you release the anchorage try to move it up and down to make sure that it is locked in position.

In the rear seat, move toward the center of the seat to position the belt away from your neck.

Lap/Shoulder Belt Untwisting Procedure

Use the following procedure to untwist a twisted lap/shoulder belt.

1. Position the latch plate as close as possible to the anchor point.

2. At about 6 to 12 in (15 to 30 cm) above the latch plate, grasp and twist the belt webbing 180 degrees to create a fold that begins immediately above the latch plate.

3. Slide the latch plate upward over the folded webbing. The folded webbing must enter the slot at the top of the latch plate.

4. Continue to slide the latch plate up until it clears the folded webbing.

Seat Belts In Passenger Seating Positions

The seat belts in the passenger seating positions are equipped with Automatic Locking Retractors (ALR) which are used to secure a child restraint system. For additional information, refer to “Installing Child Restraints Using The Vehicle Seat Belt” under the “Child Restraints” section. The chart below defines the type of feature for each seating position.

	Driver	Center	Passenger
First Row	N/A	N/A	ALR
Second Row	ALR	ALR	ALR

- N/A — Not Applicable
- ALR — Automatic Locking Retractor

If the passenger seating position is equipped with an ALR and is being used for normal usage:

Only pull the belt webbing out far enough to comfortably wrap around the occupant's mid-section so as to not activate the ALR. If the ALR is activated, you will hear a ratcheting sound as the belt retracts. Allow the webbing to retract completely in this case and then carefully pull out only the amount of webbing necessary to comfortably wrap around the occupant's mid-section. Slide the latch plate into the buckle until you hear a "click."

Automatic Locking Retractor Mode (ALR) — If Equipped

In this mode, the shoulder belt is automatically prelocked. The belt will still retract to remove any slack in the shoulder belt. The Automatic Locking Mode is available on all passenger-seating positions with a combination lap/shoulder belt. Use the Automatic Locking Mode anytime a child safety seat is installed in a seating position that has a belt with this feature. Children 12 years old and under should always be properly restrained in the rear seat.

How To Engage The Automatic Locking Mode

1. Buckle the combination lap and shoulder belt.

2. Grasp the shoulder portion and pull downward until the entire belt is extracted.

3. Allow the belt to retract. As the belt retracts, you will hear a clicking sound. This indicates the safety belt is now in the Automatic Locking Mode.

How To Disengage The Automatic Locking Mode

Unbuckle the combination lap/shoulder belt and allow it to retract completely to disengage the Automatic Locking Mode and activate the vehicle sensitive (emergency) locking mode.

WARNING!

- **The belt and retractor assembly must be replaced if the seat belt assembly Automatic Locking Retractor (ALR) feature or any other seat belt function is not working properly when checked according to the procedures in the Service Manual.**
- **Failure to replace the belt and retractor assembly could increase the risk of injury in collisions.**

Energy Management Feature

This vehicle has a safety belt system with an Energy Management feature in the front seating positions to help further reduce the risk of injury in the event of a head-on collision. This safety belt system has a retractor assembly that is designed to release webbing in a controlled manner. This feature is designed to help reduce the belt force acting on the occupant's chest.

Seat Belt Pretensioner

The seat belts for both front seating positions are equipped with pretensioning devices that are designed to remove slack from the seat belt in the event of a collision. These devices may improve the performance of the seat belt by assuring that the belt is tight about the occupant early in a collision. Pretensioners work for all size occupants, including those in child restraints.

NOTE: These devices are not a substitute for proper seat belt placement by the occupant. The seat belt still must be worn snugly and positioned properly.

The pretensioners are triggered by the Occupant Restraint Controller (ORC). Like the air bags, the pretensioners are single use items. A deployed pretensioner or a deployed air bag must be replaced immediately.

Enhanced Seat Belt Use Reminder System (BeltAlert®)

BeltAlert® is a feature intended to remind the driver and front passenger (if equipped with front passenger BeltAlert®) to fasten their seat belts. The feature is active whenever the ignition is on. If the driver or front seat passenger is unbelted, the Seat Belt Reminder Light will turn on and remain on until both front seat belts are fastened.

The BeltAlert® warning sequence begins after the vehicle speed is over 5 mph (8 km/h), by blinking the Seat Belt Reminder Light and sounding an intermittent chime. Once the sequence starts, it will continue for the entire duration or until the respective seatbelts are fastened. After the sequence completes, the Seat Belt Reminder Light remains illuminated until the respective seat belts are fastened. The driver should instruct all other occupants to fasten their seat belts. If a front seat belt is unbuckled while traveling at speeds greater than 5 mph (8 km/h), BeltAlert® will provide both audio and visual notification.

The front passenger seat BeltAlert® is not active when the front passenger seat is unoccupied. BeltAlert® may be triggered when an animal or heavy object is on the front passenger seat or when the seat is folded flat (if equipped). It is recommended that pets be restrained in the rear seat in pet harnesses or pet carriers that are secured by seat belts, and cargo is properly stowed.

BeltAlert® can be enabled or disabled by your authorized dealer. Chrysler Group LLC does not recommend deactivating BeltAlert®.

NOTE: Although BeltAlert® has been deactivated, the Seat Belt Reminder Light will continue to illuminate while the driver's or front passenger (if equipped with BeltAlert®) seat belt remains unfastened.

Seat Belts And Pregnant Women

We recommend that pregnant women use the seat belts throughout their pregnancy. Keeping the mother safe is the best way to keep the baby safe.

Pregnant women should wear the lap part of the belt across the thighs and as snug across the hips as possible. Keep the belt low so that it does not come across the abdomen. That way the strong bones of the hips will take the force if there is a collision.

Seat Belt Extender

If a seat belt is too short even when fully extended and when the adjustable upper shoulder belt anchorage (if so equipped) is in its lowest position, your authorized dealer can provide you with a seat belt extender. This extender should be used only if the existing belt is not long enough. When it is not required, remove the extender and store it.

WARNING!

Using a seat belt extender when not needed can increase the risk of injury in a collision. Only use when the seat belt is not long enough when it is worn low and snug and in the recommended seating positions. Remove and store the extender when not needed.

Supplemental Restraint System (SRS) — Air Bags

This vehicle has Advanced Front Air Bags for both the driver and front passenger as a supplement to the seat belt restraint systems. The driver's Advanced Front Air Bag is mounted in the center of the steering wheel. The passenger's Advanced Front Air Bag is mounted in the instrument panel, above the glove compartment. The words SRS AIRBAG are embossed on the air bag covers.

In addition, the vehicle is equipped with a Supplemental Driver Side Knee Air Bag mounted in the instrument panel below the steering column.

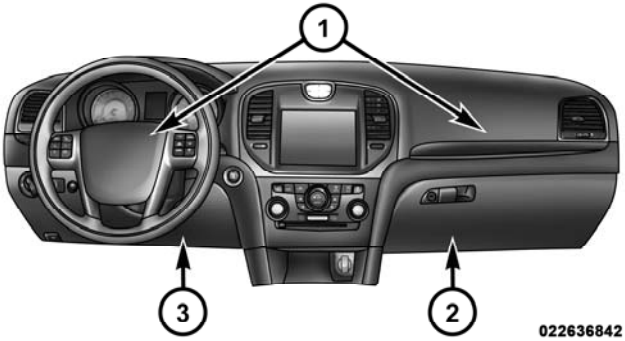

Advanced Front Air Bag And Knee Bolster Locations

1 — Driver And Passenger Advanced Front Air Bags
2 — Knee Bolster
3 — Supplemental Driver Side Knee Air Bag

NOTE: The Driver and Front Passenger Advanced Front Air Bags are certified to the new Federal regulations for Advanced Air Bags.

The Advanced Front Air Bags have a multistage inflator design. This allows the air bag to have different rates of inflation based on several factors, including the severity and type of collision.

This vehicle may be equipped with driver and/or front passenger seat track position sensors that may adjust the inflation rate of the Advanced Front Air Bags based upon seat position.

This vehicle may be equipped with a driver and/or front passenger seat belt buckle switch that detects whether the driver or front passenger seat belt is fastened. The seat belt buckle switch may adjust the inflation rate of the Advanced Front Air Bags.

This vehicle is equipped with Supplemental Side Air Bag Inflatable Curtains (SABIC) to protect the driver, front, and rear passengers sitting next to a window. The SABIC air bags are located above the side windows and their covers are also labeled: SRS AIRBAG.

This vehicle is equipped with Supplemental Seat-Mounted Side Air Bags (SAB) to provide enhanced protection for an occupant during a side impact. The Supplemental Seat-Mounted Side Air Bags are located in the outboard side of the front seats.

NOTE:

- Air Bag covers may not be obvious in the interior trim, but they will open during air bag deployment.
- After any accident, the vehicle should be taken to an authorized dealer immediately.

Air Bag System Components

Your vehicle may be equipped with the following air bag system components:

- Occupant Restraint Controller (ORC)
- Air Bag Warning Light
- Steering Wheel and Column
- Instrument Panel
- Supplemental Driver Side Knee Air Bag
- Knee Impact Bolster
- Driver Advanced Front Air Bag
- Passenger Advanced Front Air Bag
- Supplemental Seat-Mounted Side Air Bags (SAB)
- Supplemental Side Air Bag Inflatable Curtains (SABIC)

- Front and Side Impact Sensors
- Front Seat Belt Pretensioners, Seat Belt Buckle Switch, and Seat Track Position Sensors

Advanced Front Air Bag Features

The Advanced Front Air Bag system has multistage driver and front passenger air bags. This system provides output appropriate to the severity and type of collision as determined by the Occupant Restraint Controller (ORC), which may receive information from the front impact sensors.

The first stage inflator is triggered immediately during an impact that requires air bag deployment. This low output is used in less severe collisions. A higher energy output is used for more severe collisions.

WARNING!

- **No objects should be placed over or near the air bag on the instrument panel, because any such objects could cause harm if the vehicle is in a collision severe enough to cause the air bag to inflate.**
- **Do not put anything on or around the air bag covers or attempt to open them manually. You may damage the air bags and you could be injured because the air bags may no longer be functional. The protective covers for the air bag cushions are designed to open only when the air bags are inflating.**
- **Do not drill, cut or tamper with the knee bolster in any way.**
- **Do not mount any accessories to the knee bolster such as alarm lights, stereos, citizen band radios, etc.**

Supplemental Seat-Mounted Side Air Bags (SAB)

Supplemental Seat-Mounted Side Air Bags (SAB) may provide enhanced protection to help protect an occupant during a side impact. The SAB is marked with an air bag label sewn into the outboard side of the front seats.

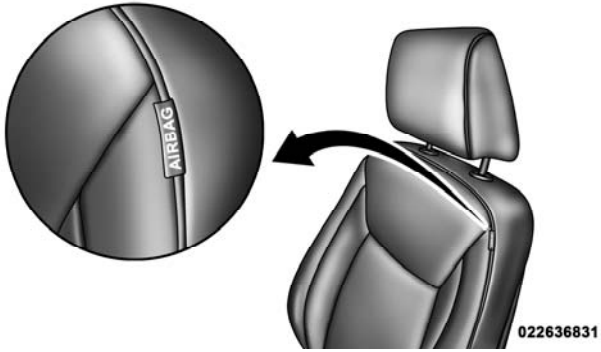

Supplemental Seat-Mounted Side Air Bag Label

When the air bag deploys, it opens the seam between the front and side of the seat's trim cover. Each air bag deploys independently; a left side impact deploys the left air bag only and a right-side impact deploys the right air bag only.

Supplemental Side Air Bag Inflatable Curtain (SABIC)

SABIC air bags may offer side-impact protection to front and rear seat outboard occupants in addition to that provided by the body structure. Each air bag features inflated chambers placed adjacent to the head of each outboard occupant that reduce the potential for side-impact head injuries. The SABIC deploy downward, covering both windows on the impact side.

Supplemental Side Air Bag Inflatable Curtains (SABIC) Label Location

NOTE:

- Air Bag covers may not be obvious in the interior trim, but they will open during air bag deployment.
- Being too close to the side air bags during deployment could cause you to be severely injured or killed.

The system includes side impact sensors that are calibrated to deploy the side air bags during impacts that require air bag occupant protection.

WARNING!

- **Your vehicle is equipped with left and right Supplemental Side Air Bag Inflatable Curtain (SABIC), do not stack luggage or other cargo up high enough to block the location of the SABIC. The area where the SABIC is located should remain free from any obstructions.**
- **Do not use accessory seat covers or place objects between you and the side air bags; the performance could be adversely affected and/or objects could be pushed into you, causing serious injury.**

Supplemental Driver Side Knee Air Bag

The Supplemental Driver Side Knee Air Bag provides enhanced protection and works together with the Driver Advanced Front Air Bag during a frontal impact.

Knee Impact Bolster

The Knee Impact Bolster helps protect the knees of the front passenger, and position the front occupant for the best interaction with the Advanced Front Air Bag.

Along with seat belts and pretensioners, Advanced Front Air Bags work with the Supplemental Driver Side Knee Air Bag and the passenger side knee bolster to provide improved protection for the driver and front passenger. Side air bags also work with seat belts to improve occupant protection.

Air Bag Deployment Sensors And Controls

Occupant Restraint Controller (ORC)

The **ORC** is part of a Federally regulated safety system required for this vehicle.

The ORC determines if deployment of the front and/or side air bags in a frontal or side collision is required. Based on the impact sensor's signals, a central electronic ORC deploys the Advanced Front Air Bags, SABIC air bags, SAB, Supplemental Driver Side Knee Air Bag, and front seat belt pretensioners, as required, depending on several factors, including the severity and type of impact.

Advanced Front Air Bags and Supplemental Driver Side Knee Air Bag are designed to provide additional protection by supplementing the seat belts in certain frontal collisions depending on several factors, including the severity and type of collision. Advanced Front Air Bags are not expected to reduce the risk of injury in rear, side, or rollover collisions.

The Advanced Front Air Bags and Supplemental Driver Side Knee Air Bag will not deploy in all frontal collisions, including some that may produce substantial vehicle damage — for example, some pole collisions, truck underrides, and angle offset collisions. On the other hand, depending on the type and location of impact, Advanced Front Air Bags may deploy in crashes with little vehicle front-end damage but that produce a severe initial deceleration.

The side air bags will not deploy in all side collisions. Side air bag deployment will depend on the severity and type of collision.

Because air bag sensors measure vehicle deceleration over time, vehicle speed and damage by themselves are not good indicators of whether or not an air bag should have deployed.

Seat belts are necessary for your protection in all collisions, and also are needed to help keep you in position, away from an inflating air bag.

The ORC monitors the readiness of the electronic parts of the air bag system whenever the ignition is in the START or ON/RUN position. If the ignition is in the OFF position or in the ACC position, the air bag system is not on and the air bags will not inflate.

The ORC contains a backup power supply system that may deploy the air bags even if the battery loses power or it becomes disconnected prior to deployment.

Also, the ORC turns on the Air Bag Warning Light in the instrument panel for approximately four to eight seconds for a self-check when the ignition is first turned on. After the self-check, the Air Bag Warning Light will turn off. If the ORC detects a malfunction in any part of the system, it

turns on the Air Bag Warning Light, either momentarily or continuously. A single chime will sound if the light comes on again after initial startup.

It also includes diagnostics that will illuminate the instrument cluster Air Bag Warning Light if a malfunction is noted that could affect the air bag system. The diagnostics also record the nature of the malfunction.

WARNING!

Ignoring the Air Bag Warning Light in your instrument panel could mean you won't have the air bags to protect you in a collision. If the light does not come on as a bulb check when the ignition is first turned on, stays on after you start the vehicle, or if it comes on as you drive, have an authorized dealer service the air bag system immediately.

Driver And Passenger Advanced Front Air Bag Inflator Units

The Driver and Passenger Advanced Front Air Bag Inflator Units are located in the center of the steering wheel and on the right side of the instrument panel. When the ORC detects a collision requiring the Advanced Front Air Bags, it signals the inflator units. A large quantity of non-toxic gas is generated to inflate the Advanced Front Air Bags. Different air bag inflation rates are possible, based on the collision type and severity. The steering wheel hub trim cover and the upper right side of the instrument panel separate and fold out of the way as the air bags inflate to their full size. The air bags fully inflate in about 50 to 70 milliseconds. This is about half of the time it takes to blink your eyes. The air bags then quickly deflate while helping to restrain the driver and front passenger.

The Advanced Front Air Bag gas is vented through the vent holes in the sides of the air bag. In this way, the air bags do not interfere with your control of the vehicle.

Supplemental Driver Side Knee Air Bag Inflator Unit

The Supplemental Driver Side Knee Air Bag unit is located in the instrument panel trim beneath the steering column. When the ORC detects a collision requiring the air bag, it signals the inflator units. A large quantity of non-toxic gas is generated to inflate the Supplemental Driver Side Knee Air Bag. The trim cover separates and folds out of the way allowing the air bag to inflate to the full size. The air bag fully inflates in about 15 to 20 milliseconds. The Supplemental Driver Side Knee Air Bag gas is vented through small vent holes in the side of the air bag.

Supplemental Seat-Mounted Side Air Bag (SAB) Inflator Units

The Supplemental Seat-Mounted Side Air Bags (SAB) are designed to activate only in certain side collisions.

The ORC determines if a side collision requires the side air bags to inflate, based on several factors, including the severity and type of collision.

Based on several factors, including the severity and type of collision, the side air bag inflator on the crash side of the vehicle may be triggered, releasing a quantity of non-toxic gas. The inflating SAB exits through the seat seam into the space between the occupant and the door. The SAB fully inflate in about 10 milliseconds. The side air bag moves at a very high speed and with such a high force that it could injure you if you are not seated properly, or if items are positioned in the area where the side air bag inflates. This especially applies to children.

Supplemental Side Air Bag Inflatable Curtain (SABIC) Inflator Units

During collisions where the impact is confined to a particular area of the side of the vehicle, the ORC may deploy the SABIC air bags, depending on several factors, including the severity and type of collision. In these events, the ORC will deploy the SABIC only on the impact side of the vehicle.

A quantity of non-toxic gas is generated to inflate the side curtain air bag. The inflating side curtain air bag pushes the outside edge of the headliner out of the way and covers the window. The air bag inflates in about 30 milliseconds (about one-quarter of the time that it takes to blink your eyes) with enough force to injure you if you are not belted and seated properly, or if items are positioned in the area where the side curtain air bag inflates. This especially applies to children. The side curtain air bag is only about 3-1/2 in (9 cm) thick when it is inflated.

Because air bag sensors estimate deceleration over time, vehicle speed and damage are not good indicators of whether or not an air bag should have deployed.

Front And Side Impact Sensors

In front and side impacts, impact sensors can aid the ORC in determining appropriate response to impact events.

Enhanced Accident Response System

In the event of an impact causing air bag deployment, if the communication network remains intact, and the power remains intact, depending on the nature of the event the ORC will determine whether to have the Enhanced Accident Response System perform the following functions:

- Cut off fuel to the engine.
- Flash hazard lights as long as the battery has power or until the ignition key is turned off.

- Turn on the interior lights, which remain on as long as the battery has power, until the ignition key is removed or the ignition switch is changed to OFF using the Keyless Go Start/Stop button.
- Unlock the doors automatically.

In order to reset the Enhanced Accident Response System functions after an event, the ignition switch must be changed from IGN ON to IGN OFF.

If A Deployment Occurs

The Advanced Front Air Bags are designed to deflate immediately after deployment.

NOTE: Front and/or side air bags will not deploy in all collisions. This does not mean something is wrong with the air bag system.

If you do have a collision which deploys the air bags, any or all of the following may occur:

- The nylon air bag material may sometimes cause abrasions and/or skin reddening to the driver and front passenger as the air bags deploy and unfold. The abrasions are similar to friction rope burns or those you might get sliding along a carpet or gymnasium floor. They are not caused by contact with chemicals. They are not permanent and normally heal quickly. However, if you haven't healed significantly within a few days, or if you have any blistering, see your doctor immediately.
- As the air bags deflate, you may see some smoke-like particles. The particles are a normal by-product of the process that generates the non-toxic gas used for air bag inflation. These airborne particles may irritate the skin, eyes, nose, or throat. If you have skin or eye irritation, rinse the area with cool water. For nose or throat irritation, move to fresh air. If the irritation continues, see your doctor. If these particles settle on your clothing, follow the garment manufacturer's instructions for cleaning.

Do not drive your vehicle after the air bags have deployed. If you are involved in another collision, the air bags will not be in place to protect you.

WARNING!

Deployed air bags and seat belt pretensioners cannot protect you in another collision. Have the air bags, seat belt pretensioners, and the front seat belt retractor assemblies replaced by an authorized dealer immediately. Also, have the Occupant Restraint Controller (ORC) system serviced as well.

Maintaining Your Air Bag System

WARNING!

- **Modifications to any part of the air bag system could cause it to fail when you need it. You could be injured if the air bag system is not there to protect you. Do not modify the components or wiring, including adding any kind of badges or stickers to the steering wheel hub trim cover or the upper right side of the instrument panel. Do not modify the front bumper, vehicle body structure, or add aftermarket side steps or running boards.**
- **It is dangerous to try to repair any part of the air bag system yourself. Be sure to tell anyone who works on your vehicle that it has an air bag system.**

(Continued)

WARNING! (Continued)

- **Do not attempt to modify any part of your air bag system. The air bag may inflate accidentally or may not function properly if modifications are made. Take your vehicle to an authorized dealer for any air bag system service. If your seat including your trim cover and cushion needs to be serviced in any way (including removal or loosening/tightening of seat attachment bolts), take the vehicle to your authorized dealer. Only manufacturer approved seat accessories may be used. If it is necessary to modify the air bag system for persons with disabilities, contact your authorized dealer.**

Air Bag Warning Light

You will want to have the air bags ready to inflate for your protection in a collision. The Air Bag Warning Light monitors the internal circuits and interconnecting wiring associated with air bag system electrical components. While the air bag system is designed to be maintenance free, if any of the following occurs, have an authorized dealer service the air bag system immediately.

- The Air Bag Warning Light does not come on during the four to eight seconds when the ignition switch is first cycled to the ON/RUN position.
- The Air Bag Warning Light remains on after the four to eight-second interval.
- The Air Bag Warning Light comes on intermittently or remains on while driving.

NOTE: If the speedometer, tachometer, or any engine related gauges are not working, the Occupant Restraint Controller (ORC) may also be disabled. The air bags may not be ready to inflate for your protection. Promptly check the fuse block for blown fuses. Refer to the label located on the inside of the fuse block cover for the proper air bag fuses. See your authorized dealer if the fuse is good.

Event Data Recorder (EDR)

This vehicle is equipped with an event data recorder (EDR). The main purpose of an EDR is to record, in certain crash or near crash-like situations, such as an air bag deployment or hitting a road obstacle, data that will assist in understanding how a vehicle's systems performed. The EDR is designed to record data related to vehicle dynamics and safety systems for a short period of time, typically 30 seconds or less. The EDR in this vehicle is designed to record such data as:

- How various systems in your vehicle were operating;
- Whether or not the driver and passenger safety belts were buckled/fastened;
- How far (if at all) the driver was depressing the accelerator and/or brake pedal; and,
- How fast the vehicle was traveling.

These data can help provide a better understanding of the circumstances in which crashes and injuries occur.

NOTE: EDR data are recorded by your vehicle only if a non-trivial crash situation occurs; no data are recorded by the EDR under normal driving conditions and no personal data (e.g., name, gender, age, and crash location) are recorded. However, other parties, such as law enforcement, could combine the EDR data with the type of personally identifying data routinely acquired during a crash investigation.

To read data recorded by an EDR, special equipment is required, and access to the vehicle or the EDR is needed. In addition to the vehicle manufacturer, other parties, such as law enforcement, that have the special equipment, can read the information if they have access to the vehicle or the EDR.

Child Restraints

Everyone in your vehicle needs to be buckled up all the time, including babies and children. Every state in the United States and all Canadian provinces require that small children ride in proper restraint systems. This is the law, and you can be prosecuted for ignoring it.

Children 12 years or younger should ride properly buckled up in a rear seat, if available. According to crash statistics, children are safer when properly restrained in the rear seats rather than in the front.

WARNING!

In a collision, an unrestrained child, even a tiny baby, can become a projectile inside the vehicle. The force required to hold even an infant on your lap could become so great that you could not hold the child, no matter how strong you are. The child and others could be badly injured. Any child riding in your vehicle should be in a proper restraint for the child's size.

There are different sizes and types of restraints for children from newborn size to the child almost large enough for an adult safety belt. Always check the child seat Owner's Manual to ensure you have the correct seat for your child. Use the restraint that is correct for your child.

Infants And Child Restraints

Safety experts recommend that children ride rearward-facing in the vehicle until they are two years old or until they reach either the height or weight limit of their rear facing child safety seat. Two types of child restraints can be used rearward-facing: infant carriers and convertible child seats.

The infant carrier is only used rearward-facing in the vehicle. It is recommended for children from birth until they reach the weight or height limit of the infant carrier. Convertible child seats can be used either rearward-facing or forward-facing in the vehicle. Convertible child seats often have a higher weight limit in the rearward-facing direction than infant carriers do, so they can be used rearward-facing by children who have outgrown their infant carrier but are still less than at least two years old. Children should remain rearward-facing until they reach the highest weight or height allowed by their convertible child seat. Both types of child restraints are held in the vehicle by the lap/shoulder belt or the LATCH child restraint anchor system. Refer to "Lower Anchors and Tether for CHildren (LATCH)".

WARNING!

Rearward-facing child seats must never be used in the front seat of a vehicle with the front passenger air bag. An air bag deployment could cause severe injury or death to infants in this position.

Older Children And Child Restraints

Children who are two years old or who have outgrown their rear-facing convertible child seat can ride forward-facing in the vehicle. Forward-facing child seats and convertible child seats used in the forward-facing direction are for children who are over two years old or who have outgrown the rear-facing weight or height limit of their rear-facing convertible child seat. Children should remain in a forward-facing child seat with a harness for

as long as possible, up to the highest weight or height allowed by the child seat. These child seats are also held in the vehicle by the lap/shoulder belt or the LATCH child restraint anchorage system. Refer to "Lower Anchors and Tether for CHildren (LATCH)".

All children whose weight or height is above the forward-facing limit for the child seat should use a belt-positioning booster seat until the vehicle's seat belts fit properly. If the child cannot sit with knees bent over the vehicle's seat cushion while the child's back is against the seatback, they should use a belt-positioning booster seat. The child and belt-positioning booster seat are held in the vehicle by the lap/shoulder belt.

Children Too Large For Booster Seats

Children who are large enough to wear the shoulder belt comfortably and whose legs are long enough to bend over the front of the seat when their back is against the seatback should use the lap/shoulder belt in a rear seat.

- Make sure that the child is upright in the seat.
- The lap portion should be low on the hips and as snug as possible.
- Check belt fit periodically. A child's squirming or slouching can move the belt out of position.
- If the shoulder belt contacts the face or neck, move the child closer to the center of the vehicle. Never allow a child to put the shoulder belt under an arm or behind their back.

NOTE: For additional information, refer to www.seatcheck.org or call 1–866–SEATCHECK. Canadian residents should refer to Transport Canada's website for additional information: http://www.tc.gc.ca/roadsafety/safedrivers/childsafety/index.htm

WARNING!

- **Improper installation can lead to failure of an infant or child restraint. It could come loose in a collision. The child could be badly injured or killed. Follow the manufacturer's directions exactly when installing an infant or child restraint.**
- **A rearward-facing child restraint should only be used in a rear seat. A rearward-facing child restraint in the front seat may be struck by a deploying passenger air bag, which may cause severe or fatal injury to the infant.**

Here are some tips on getting the most out of your child restraint:

- Before buying any restraint system, make sure that it has a label certifying that it meets all applicable Safety Standards. Chrysler Group LLC also recommends that you make sure that you can install the child restraint in the vehicle where you will use it before you buy it.
- The restraint must be appropriate for your child's weight and height. Check the label on the restraint for weight and height limits.
- Carefully follow the instructions that come with the restraint. If you install the restraint improperly, it may not work when you need it.
- Buckle the child into the seat according to the child restraint manufacturer's directions.

WARNING!

When your child restraint is not in use, secure it in the vehicle with the seat belt or remove it from the vehicle. Do not leave it loose in the vehicle. In a sudden stop or accident, it could strike the occupants or seatbacks and cause serious personal injury.

Lower Anchors and Tether for CHildren (LATCH)

Your vehicle's rear seat is equipped with the child restraint anchorage system called LATCH. The LATCH system provides for the installation of the child restraint without using the vehicle's seat belts, instead securing the child restraint using lower anchorages and upper tether straps from the child restraint to the vehicle structure.

LATCH-compatible child restraint systems are now available. However, because the lower anchorages are to be introduced over a period of years, child restraint systems having attachments for those anchorages will continue to have features for installation using the vehicle's seat belts. Child restraints having tether straps and hooks for connection to the top tether anchorages have been available for some time. For some older child restraints, many child restraint manufacturers offer add-on tether strap kits or retrofit kits. You are urged to take advantage of all the available attachments provided with your child restraint in any vehicle.

All three rear-seating positions have lower anchorages that are capable of accommodating LATCH-compatible child seats. You should never install LATCH-compatible child seats so that two seats share a common lower anchorage. If installing child seats in adjacent rear-seating positions, or if your child restraints are not LATCH-compatible, install the restraints using the vehicle's seat belts.

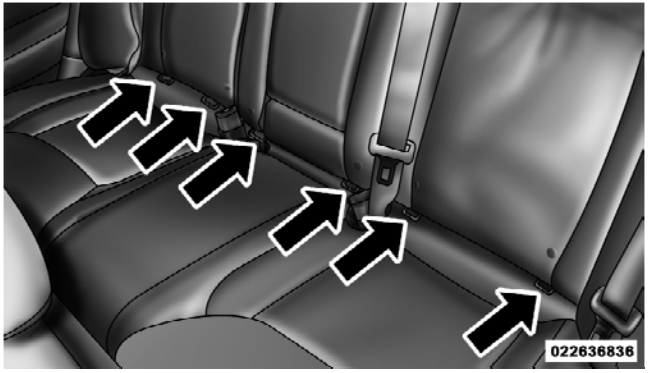

LATCH Anchorages

Installing The LATCH-Compatible Child Restraint System

We urge you to follow the manufacturer's directions carefully when installing your child restraint. Not all child restraint systems will be installed as described here. Again, carefully follow the installation instructions that are provided with the child restraint system.

The rear seat lower anchorages are round bars located at the rear of the seat cushion where it meets the seatback and are located just below the button with the anchorage symbol on the rear seat, but are not visible. You will easily feel them if you run your finger along the intersection of the seatback and seat cushion surfaces.

In addition, there are tether strap anchorages behind each rear seating position located in the panel between the rear seatback and the rear window. These tether strap anchorages are under a plastic cover with this symbol on it.

Many, but not all, restraint systems will be equipped with separate straps on each side, with each having a hook or connector for attachment to the lower anchorage and a means of adjusting the tension in the strap. Forward-facing toddler restraints and some rear-facing infant restraints will also be equipped with a tether strap, a hook for attachment to the tether strap anchorage and a means of adjusting the tension of the strap.

You will first loosen the child seat adjusters on the lower straps and on the tether strap so that you can more easily attach the hooks or connectors to the vehicle anchorages. Next, attach the lower hooks or connectors over the top of the seat cover material. Then, rotate the tether anchorage cover directly behind the seat where you are placing the child restraint and attach the tether strap to the anchorage, being careful to route the tether strap to provide the most direct path between the anchor and the child restraint. Finally, tighten all three straps as you push the child restraint rearward and downward into the seat, removing slack in the straps according to the child restraint manufacturer's instructions.

For center seating position route the tether strap over the seatback and adjustable headrest (with the headrest in the full down position) then attach the hook to the tether anchor located in the panel between the rear seatback and the rear window.

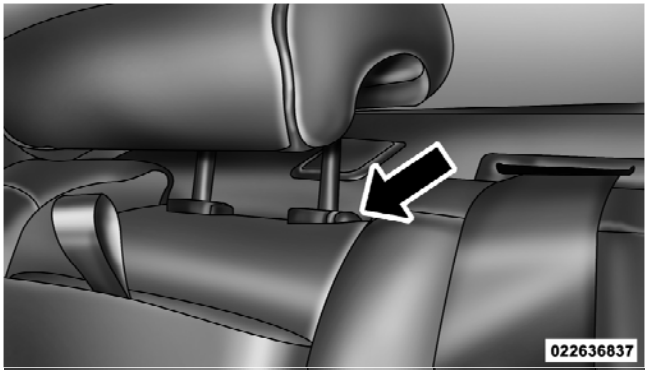

Adjustable Headrest Release Push Button

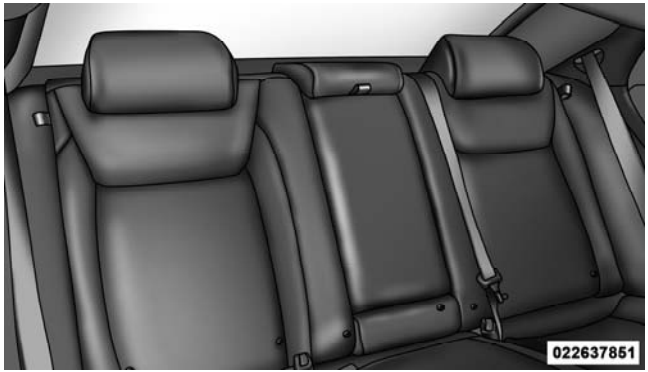

Adjustable Headrest Downward Position

WARNING!

An incorrectly anchored tether strap could lead to increased head motion and possible injury to the child. Use only the anchor positions directly behind the child seat to secure a child restraint top tether strap.

NOTE:

- Ensure that the tether strap does not slip into the opening between the seatbacks as you remove slack in the strap.
- When using the LATCH attaching system to install a child restraint, please ensure that all seat belts not being used for occupant restraints are stowed and out of reach of children. It is recommended that before installing the child restraint, buckle the seat belt so the seat belt is tucked behind the child restraint and out of reach. If the buckled seat belt interferes with the child restraint installation, instead of tucking the seat belt behind the child restraint, route the seat belt through the child restraint belt path and then buckle it. This should stow the seat belt out of the reach of an inquisitive child. Remind all children in the vehicle that the seat belts are not toys and should not be played with, and never leave your child unattended in the vehicle.

WARNING!

Improper installation of a child restraint to the LATCH anchorages can lead to failure of an infant or child restraint. The child could be badly injured or killed. Follow the manufacturer's directions exactly when installing an infant or child restraint.

Installing Child Restraints Using The Vehicle Seat Belts

The seat belts in the passenger seating positions are equipped with an Automatic Locking Retractor (ALR) to secure a Child Restraint System (CRS). These types of seat belts are designed to keep the lap portion of the seat belt tight around the child restraint so that it is not necessary to use a locking clip. The ALR will make a ratcheting noise if you extract the entire belt from the retractor and then allow the belt to retract into the retractor. For additional information on ALR, refer to "Automatic Locking Mode". The chart below defines the seating positions with an Automatic Locking Retractor (ALR) or a cinching latch plate.

	Driver	Center	Passenger
	CRS Lock	CRS Lock	CRS Lock
First Row	N/A	N/A	ALR
Second Row	ALR	ALR	ALR

- N/A — Not Applicable
- ALR — Automatic Locking Retractor

1. To install a child restraint with ALR, first, pull enough of the seat belt webbing from the retractor to route it through the belt path of the child restraint. Slide the latch plate into the buckle until you hear a click. Next, extract all the seat belt webbing out of the retractor and then allow the belt to retract into the retractor. As the belt retracts, you will hear a ratcheting sound. This indicates the safety belt is now in the Automatic Locking mode.

2. Finally, pull on any excess webbing to tighten the lap portion around the child restraint. Any seat belt system will loosen with time, so check the belt occasionally, and pull it tight if necessary.

To attach a child restraint tether strap:

1. Rotate the cover over the anchor directly behind the seat where you are placing the child restraint.

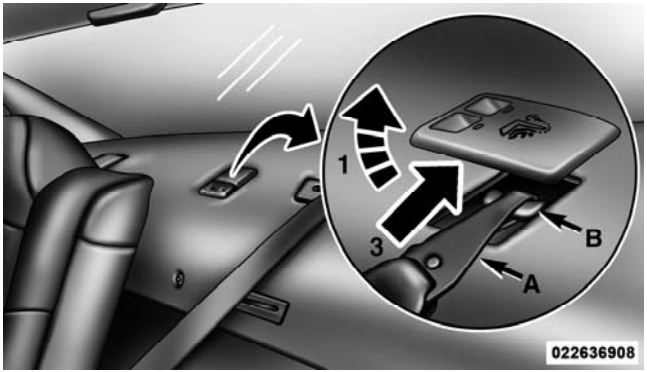

Tether Strap Mounting

1 — Cover	A — Tether Strap Hook
3 — Attaching Strap	B — Tether Anchor

2. Route the tether strap to provide the most direct path for the strap between the anchor and the child seat.

3. Attach the tether strap hook (A) of the child restraint to the anchor (B) and remove slack in the tether strap according to the child restraint manufacturer's instructions.

NOTE: Ensure that the tether strap does not slip into the opening between the seatbacks as you remove slack in the strap.

WARNING!

An incorrectly anchored tether strap could lead to increased head motion and possible injury to the child. Use only the anchor positions directly behind the child seat to secure a child restraint top tether strap.

Transporting Pets

Air Bags deploying in the front seat could harm your pet. An unrestrained pet will be thrown about and possibly injured, or injure a passenger during panic braking or in a collision.

Pets should be restrained in the rear seat in pet harnesses or pet carriers that are secured by seat belts.

ENGINE BREAK-IN RECOMMENDATIONS

A long break-in period is not required for the engine and drivetrain (transmission and axle) in your vehicle.

Drive moderately during the first 300 miles (500 km). After the initial 60 miles (100 km), speeds up to 50 or 55 mph (80 or 90 km/h) are desirable.

While cruising, brief full-throttle acceleration within the limits of local traffic laws contributes to a good break-in. Wide-open throttle acceleration in low gear can be detrimental and should be avoided.

The engine oil installed in the engine at the factory is a high-quality energy conserving type lubricant. Oil changes should be consistent with anticipated climate conditions under which vehicle operations will occur. For the recommended viscosity and quality grades, refer to "Maintenance Procedures" in "Maintaining Your Vehicle".

CAUTION!

Never use Non-Detergent Oil or Straight Mineral Oil in the engine or damage may result.

NOTE: A new engine may consume some oil during its first few thousand miles (kilometers) of operation. This should be considered a normal part of the break-in and not interpreted as an indication of difficulty.

SAFETY TIPS

Transporting Passengers

NEVER TRANSPORT PASSENGERS IN THE CARGO AREA.

WARNING!

- **Do not leave children or animals inside parked vehicles in hot weather. Interior heat build-up may cause serious injury or death.**
- **It is extremely dangerous to ride in a cargo area, inside or outside of a vehicle. In a collision, people riding in these areas are more likely to be seriously injured or killed.**
- **Do not allow people to ride in any area of your vehicle that is not equipped with seats and seat belts.**
- **Be sure everyone in your vehicle is in a seat and using a seat belt properly.**

Exhaust Gas

WARNING!

Exhaust gases can injure or kill. They contain carbon monoxide (CO), which is colorless and odorless. Breathing it can make you unconscious and can eventually poison you. To avoid breathing (CO), follow these safety tips:

- **Do not run the engine in a closed garage or in confined areas any longer than needed to move your vehicle in or out of the area.**
- **If you are required to drive with the trunk/liftgate open, make sure that all windows are closed and the climate control BLOWER switch is set at high speed. DO NOT use the recirculation mode.**

(Continued)

WARNING! (Continued)

- **If it is necessary to sit in a parked vehicle with the engine running, adjust your heating or cooling controls to force outside air into the vehicle. Set the blower at high speed.**

The best protection against carbon monoxide entry into the vehicle body is a properly maintained engine exhaust system.

Whenever a change is noticed in the sound of the exhaust system, when exhaust fumes can be detected inside the vehicle, or when the underside or rear of the vehicle is damaged, have a competent mechanic inspect the complete exhaust system and adjacent body areas for broken, damaged, deteriorated, or mispositioned parts. Open seams or loose connections could permit exhaust fumes to seep into the passenger compartment. In addition, inspect the exhaust system each time the vehicle is raised for lubrication or oil change. Replace as required.

Safety Checks You Should Make Inside The Vehicle

Seat Belts

Inspect the belt system periodically, checking for cuts, frays, and loose parts. Damaged parts must be replaced immediately. Do not disassemble or modify the system.

Front seat belt assemblies must be replaced after a collision. Rear seat belt assemblies must be replaced after a collision if they have been damaged (i.e., bent retractor, torn webbing, etc.). If there is any question regarding belt or retractor condition, replace the belt.

Air Bag Warning Light

The light should come on and remain on for four to eight seconds as a bulb check when the ignition switch is first turned ON. If the light is not lit during starting, see your authorized dealer. If the light stays on, flickers, or comes on while driving, have the system checked by an authorized dealer.

Defroster

Check operation by selecting the defrost mode and place the blower control on high speed. You should be able to feel the air directed against the windshield. See your authorized dealer for service if your defroster is inoperable.

Floor Mat Safety Information

Always use floor mats designed to fit the footwell of your vehicle. Use only floor mats that leave the pedal area unobstructed and that are firmly secured so that they cannot slip out of position and interfere with the pedals or impair safe operation of your vehicle in other ways.

WARNING!

Pedals that cannot move freely can cause loss of vehicle control and increase the risk of serious personal injury.

(Continued)

WARNING! (Continued)

- **Always make sure that floor mats are properly attached to the floor mat fasteners.**
- **Never place or install floor mats or other floor coverings in the vehicle that cannot be properly secured to prevent them from moving and interfering with the pedals or the ability to control the vehicle.**
- **Never put floor mats or other floor coverings on top of already installed floor mats. Additional floor mats and other coverings will reduce the size of the pedal area and interfere with the pedals.**
- **Check mounting of mats on a regular basis. Always properly reinstall and secure floor mats that have been removed for cleaning.**

(Continued)

WARNING! (Continued)

- **Always make sure that objects cannot fall into the driver footwell while the vehicle is moving. Objects can become trapped under the brake pedal and accelerator pedal causing a loss of vehicle control.**
- **If required, mounting posts must be properly installed, if not equipped from the factory.**

  Failure to properly follow floor mat installation or mounting can cause interference with the brake pedal and accelerator pedal operation causing loss of control of the vehicle.

Periodic Safety Checks You Should Make Outside The Vehicle

Tires

Examine tires for excessive tread wear and uneven wear patterns. Check for stones, nails, glass, or other objects lodged in the tread or sidewall. Inspect the tread for cuts and cracks. Inspect sidewalls for cuts, cracks and bulges. Check the wheel nuts for tightness. Check the tires (including spare) for proper cold inflation pressure.

Lights

Have someone observe the operation of exterior lights while you work the controls. Check turn signal and high beam indicator lights on the instrument panel.

Door Latches

Check for positive closing, latching, and locking.

Fluid Leaks

Check area under vehicle after overnight parking for fuel, engine coolant, oil, or other fluid leaks. Also, if gasoline fumes are detected or if fuel, power steering fluid, or brake fluid leaks are suspected, the cause should be located and corrected immediately.

UNDERSTANDING THE FEATURES OF YOUR VEHICLE

CONTENTS

■ Mirrors 94

□ Automatic Dimming Mirror 94

□ Outside Mirrors 95

□ Outside Mirrors Folding Feature — If Equipped 95

□ Driver's Automatic Dimming Mirror — If Equipped 95

□ Outside Mirrors With Turn Signal And Approach Lighting — If Equipped 95

□ Tilt Mirrors In Reverse — If Equipped 96

□ Power Mirrors 97

□ Power Folding Outside Mirrors — If Equipped 98

□ Heated Mirrors — If Equipped 98

□ Illuminated Vanity Mirrors — If Equipped . . . 98

□ "Slide-On-Rod" And Extender Features Of Sun Visor 99

■ Blind Spot Monitoring — If Equipped 100

□ Rear Cross Path 105

□ Modes Of Operation 106

■ Uconnect™ Phone (8.4/8.4N) 108
□ Uconnect Touch™ 8.4/8.4 NAV 108
□ Operation 110
□ Phone Call Features 122
□ Uconnect™ Phone Features 126
□ Advanced Phone Connectivity 131
□ Things You Should Know About Your Uconnect™ Phone 131
□ General Information 141
■ Voice Command 142
□ Uconnect Touch™ 8.4/8.4 NAV 142
□ Uconnect™ Voice Commands 144
□ Voice Tree 146
■ Seats 157
□ Power Seats 157
□ Power Lumbar — If Equipped 160
□ Heated Seats — If Equipped 160
□ Ventilated Seats — If Equipped 163
□ Head Restraints 165
□ Folding Rear Seat 168
■ Driver Memory Seat — If Equipped 169
□ Programming The Memory Feature 170
□ Linking And Unlinking The Remote Keyless Entry Transmitter To Memory 171
□ Memory Position Recall 171
□ Easy Entry/Exit Seat (Available With Memory Seat Only) 172

■ To Open And Close The Hood 173
■ Lights 175
□ Headlight Switch 175
□ Automatic Headlights — If Equipped 176
□ Headlights On With Wipers (Available With Automatic Headlights Only) 176
□ Headlight Time Delay 176
□ Smartbeam™ — If Equipped 177
□ Steering Directed Headlights — If Equipped 178
□ Daytime Running Lights (DRL) 179
□ Lights-On Reminder 179
□ Fog Lights — If Equipped 179
□ Multifunction Lever 180
□ Turn Signals 181
□ Lane Change Assist 181
□ High/Low Beam Switch 181
□ Flash-To-Pass 181
□ Front Map/Reading Lights 182
□ Courtesy Lights 183
□ Ambient Light 183
□ Interior Lights 184
■ Windshield Wipers And Washers 186
□ Intermittent Wiper System 187
□ Wiper Operation 187
□ Mist Feature 188
□ Windshield Washers 188

- □ Headlights On With Wipers (Available With Automatic Headlights Only) 188
- □ Rain Sensing Wipers — If Equipped 189

■ Tilt/Telescoping Steering Column 190

■ Power Tilt/Telescoping Steering Column — If Equipped 191

■ Heated Steering Wheel — If Equipped 192

■ Adjustable Pedals — If Equipped 194

■ Electronic Speed Control — If Equipped 196

- □ To Activate 197
- □ To Set A Desired Speed 197
- □ To Deactivate 197
- □ To Resume Speed 198
- □ To Vary The Speed Setting 198
- □ To Accelerate For Passing 198

■ Adaptive Cruise Control (ACC) — If Equipped 199

- □ Adaptive Cruise Control (ACC) Operation . . 202
- □ Activating Adaptive Cruise Control (ACC) . . 202
- □ To Activate 203
- □ To Set A Desired ACC Speed 204
- □ To Cancel 206
- □ To Turn Off 206
- □ To Resume Speed 207
- □ To Vary The Speed Setting 207
- □ Setting The Following Distance In ACC 208
- □ Adaptive Cruise Control (ACC) Menu 212

□ Display Warnings And Maintenance 213
□ Precautions While Driving With ACC 216
□ General Information 220
□ Normal (Fixed Speed) Cruise Control Mode 220
□ Forward Collision Warning — If Equipped . . 222
■ Parksense® Park Assist — If Equipped 225
□ Parksense® Sensors 225
□ Parksense® Warning Display 226
□ Parksense® Display 227
□ Front Park Assist Audible Alerts 231
□ Enabling And Disabling Parksense® 231
□ Service The Parksense® Park Assist System . . 231
□ Cleaning The Parksense® System 232
□ Parksense® System Usage Precautions 232
■ Parkview® Rear Back Up Camera — If Equipped 235
□ Turning Parkview® On Or Off — With Touch Screen Radio 236
■ Overhead Console 237
□ Front Map/Reading Lights 237
□ Sunglass Bin Door 238
■ Garage Door Opener — If Equipped 238
□ Before You Begin Programming HomeLink® 240
□ Programming A Rolling Code 240
□ Programming A Non-Rolling Code 242

□ Canadian/Gate Operator Programming 244
□ Using HomeLink® 245
□ Security 245
□ Troubleshooting Tips 246
□ General Information 247
■ Power Sunroof — If Equipped 247
□ Opening Sunroof — Express 248
□ Opening Sunroof — Manual Mode 248
□ Closing Sunroof — Express 248
□ Closing Sunroof — Manual Mode 249
□ Pinch Protect Feature 249
□ Venting Sunroof — Express 249
□ Sunshade Operation 249
□ Wind Buffeting 250
□ Sunroof Maintenance 250
□ Ignition Off Operation 250
■ Commandview® Sunroof With Power Shade — If Equipped 251
□ Opening Sunroof — Express 252
□ Opening Sunroof — Manual Mode 252
□ Closing Sunroof — Express 252
□ Closing Sunroof — Manual Mode 252
□ Opening Power Shade — Express 252
□ Opening Power Shade — Manual Mode 253
□ Closing Power Shade — Express 253
□ Closing Power Shade — Manual Mode 253

- □ Pinch Protect Feature 253
- □ Wind Buffeting 253
- □ Sunroof Maintenance 254
- □ Ignition Off Operation 254
- □ Sunroof Fully Closed 254

■ Electrical Power Outlets 254

■ Cupholders 259

- □ Front Seat Cupholders 259
- □ Rear Seat Cupholders 261

■ Storage 262

- □ Glovebox Storage 262
- □ Console Features 262
- □ Door Storage 264
- □ Rear Seat Armrest Storage — If Equipped . . . 264
- □ Cargo Area — Vehicles Equipped With 60/40 Split-Folding Rear Seat 265

■ Cargo Area Features 266

- □ Trunk Mat — If Equipped 266
- □ Grocery Bag Hooks 267

■ Rear Window Features 267

- □ Rear Window Defroster 267
- □ Power Sunshade — If Equipped 268

■ Load Leveling System — If Equipped 270

MIRRORS

Automatic Dimming Mirror

This mirror automatically adjusts for headlight glare from vehicles behind you. This feature will be defaulted on, and only be disabled when the vehicle is moving in reverse.

NOTE: This feature is disabled when the vehicle is moving in reverse.

030436523

Automatic Dimming Mirror

CAUTION!

To avoid damage to the mirror during cleaning, never spray any cleaning solution directly onto the mirror. Apply the solution onto a clean cloth and wipe the mirror clean.

Outside Mirrors

To receive maximum benefit, adjust the outside mirror(s) to center on the adjacent lane of traffic and a slight overlap of the view obtained from the inside mirror.

NOTE: The passenger side convex outside mirror will give a much wider view to the rear, and especially of the lane next to your vehicle.

WARNING!

Vehicles and other objects seen in the passenger side convex mirror will look smaller and farther away than they really are. Relying too much on your passenger side convex mirror could cause you to collide with another vehicle or other object. Use your inside mirror when judging the size or distance of a vehicle seen in the passenger side convex mirror.

Outside Mirrors Folding Feature — If Equipped

Some models have outside mirrors that are hinged. The hinge allows the mirror to pivot forward and rearward to resist damage. The hinge has three detent positions: full forward, full rearward and normal.

Driver's Automatic Dimming Mirror — If Equipped

This feature is controlled by the inside automatic dimming mirror and will automatically adjust for headlight glare when the inside mirror adjusts.

NOTE: This feature is also available on the passenger's side when equipped with turn signal and approach lighting.

Outside Mirrors With Turn Signal And Approach Lighting — If Equipped

Driver and passenger outside mirrors with turn signal and approach lighting contain four LEDs, which are located in the upper outer corner of each mirror.

Three of the LEDs are turn signal indicators, which flash with the corresponding turn signal lights in the front and rear of the vehicle. Turning on the Hazard Warning flashers will also activate these LEDs.

The fourth LED supplies illuminated entry lighting, which turns on in both mirrors when you use the Remote Keyless Entry (RKE) transmitter or open any door. This LED shines outward to illuminate the front and rear door handles. It also shines downward to illuminate the area in front of the doors.

The Illuminated Entry lighting fades to off after about 30 seconds or it will fade to off immediately once the ignition is placed into the RUN position.

NOTE: The approach lighting will not function when the shift lever is moved out of the PARK position.

Tilt Mirrors In Reverse — If Equipped

Tilt Mirrors in Reverse provides automatic outside mirror positioning which will aid the driver's view of the ground rearward of the front doors. The outside mirrors will move slightly downward from the present position when the vehicle is shifted into REVERSE. The outside mirrors will then return to the original position when the vehicle is shifted out of the REVERSE position. Each stored memory setting will have an associated Tilt Mirrors in Reverse position.

NOTE:

- The Tilt Mirrors in Reverse feature is not turned on when delivered from the factory. The Tilt Mirrors in Reverse feature can be turned on and off using the Uconnect Touch™ System.
- Refer to "Uconnect Touch™ Settings" in "Understanding Your Instrument Panel" for further information.

Power Mirrors

The power mirror controls are located on the driver's door trim panel.

Power Mirror Control

The power mirror controls consist of mirror select buttons and a four-way mirror control switch. To adjust a mirror, press either the L (left) or R (right) button to select the mirror that you want to adjust.

NOTE: A light in the select button will illuminate indicating the mirror is activated and can be adjusted.

Using the mirror control switch, press on any of the four arrows for the direction that you want the mirror to move.

Power mirror preselected positions can be controlled by the optional Memory Seat Feature. Refer to "Driver Memory Seat" in "Understanding The Features Of Your Vehicle" for further information.

Power Folding Outside Mirrors — If Equipped

The switch for the power folding mirrors is located between the power mirror switches L (left) and R (right). Press the switch once and the mirrors will fold in, pressing the switch a second time will return the mirrors to the normal driving position.

NOTE: Pressing the power folding mirror switch for more than four seconds, or if the vehicle speed is greater than 5 mph (8 km/h) will disable the folding feature.

If the mirrors are in the folded position, and vehicle speed is equal or greater than 5 mph (8 km/h), they will automatically unfold.

Heated Mirrors — If Equipped

These mirrors are heated to melt frost or ice. This feature is activated whenever you turn on the rear window defroster. Refer to "Rear Window Features" in "Understanding The Features Of Your Vehicle" for further information.

Illuminated Vanity Mirrors — If Equipped

An illuminated vanity mirror is located on the sun visor. To use the mirror, rotate the sun visor downward and swing the mirror cover upward. The light turns on automatically. Closing the mirror cover turns off the light.

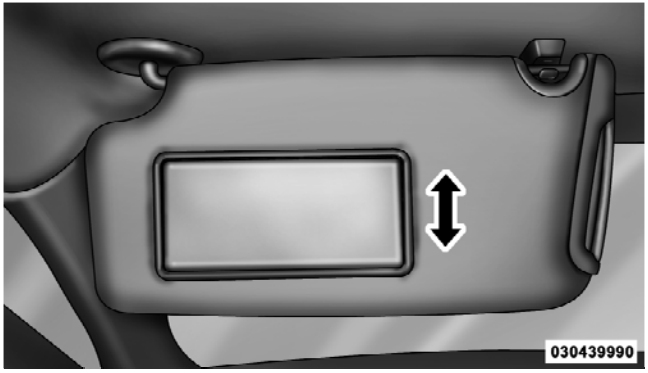

Illuminated Vanity Mirror

"Slide-On-Rod" And Extender Features Of Sun Visor

To use the "Slide-On-Rod" feature of the sun visor, rotate the sun visor downward and swing the sun visor so it is parallel to the side window, grabbing the sun visor with your left hand pull rearwards until the sun visor is in the desired position. To use the extender feature of the sun visor, grab the extender which is located at the rear of the visor and pull rearward.

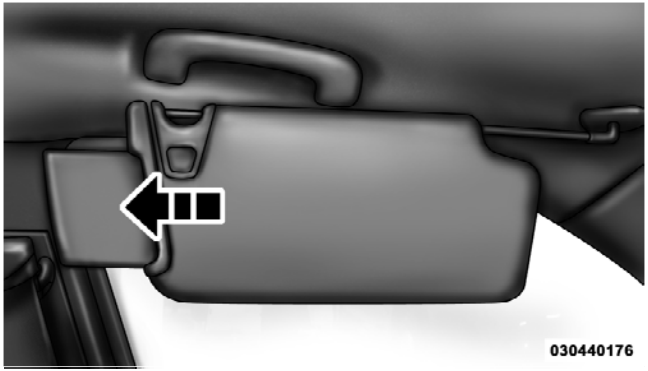

Slide-On-Rod Feature

BLIND SPOT MONITORING — IF EQUIPPED

The Blind Spot Monitoring (BSM) system uses two radar-based sensors, located inside the rear bumper fascia, to detect highway licensable vehicles (automobiles, trucks, motorcycles, etc.) that enter the blind spot zones from the rear/front/side of the vehicle.

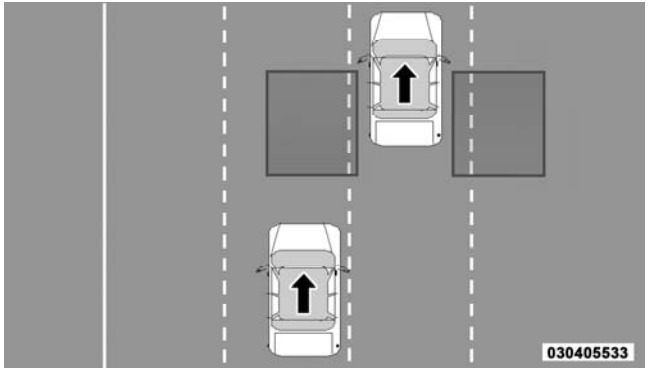

Rear Detection Zones

When the vehicle is started, the BSM warning light will momentarily illuminate in both outside rear view mirrors to let the driver know that the system is operational. The BSM system sensors operate when the vehicle is in any forward gear or REVERSE and enters stand by mode when the vehicle is in PARK.

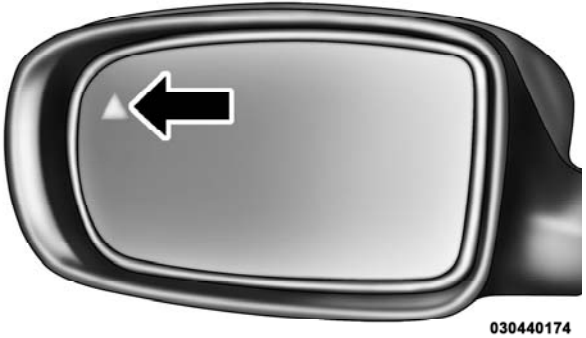

BSM Warning Light

The BSM detection zone covers approximately one lane on both sides of the vehicle (11 ft or 3.35 m). The zone starts at the outside rear view mirror and extends approximately 20 ft (6 m) to the rear of the vehicle. The BSM system monitors the detection zones on both sides of the vehicle when the vehicle speed reaches approximately 6 mph (10 km/h) or higher and will alert the driver of vehicles in these areas.

NOTE:

- The BSM system does NOT alert the driver about rapidly approaching vehicles that are outside the detection zones.
- The BSM system detection zone DOES NOT change if your vehicle is towing a trailer. Therefore, visually verify the adjacent lane is clear for both your vehicle and trailer before making a lane change. If the trailer or other object (i.e., bicycle, sports equipment) extends beyond the side of your vehicle, this may result in the BSM warning light remaining illuminated the entire time the vehicle is in a forward gear.

The area on the rear fascia where the radar sensors are located must remain free of snow, ice, and dirt/road contamination so that the BSM system can function properly. Do not block the area of the rear fascia where the radar sensors are located with foreign objects (bumper stickers, bicycle racks, etc.).

The BSM system notifies the driver of objects in the detection zones by illuminating the BSM warning light located in the outside mirrors in addition to sounding an audible (chime) alert and reducing the radio volume. Refer to “Modes Of Operation” for further information.

The BSM system monitors the detection zone from three different entry points (side, rear, front) while driving to see if an alert is necessary. The BSM system will issue an alert during these types of zone entries.

Entering From The Side

Vehicles that move into your adjacent lanes from either side of the vehicle.

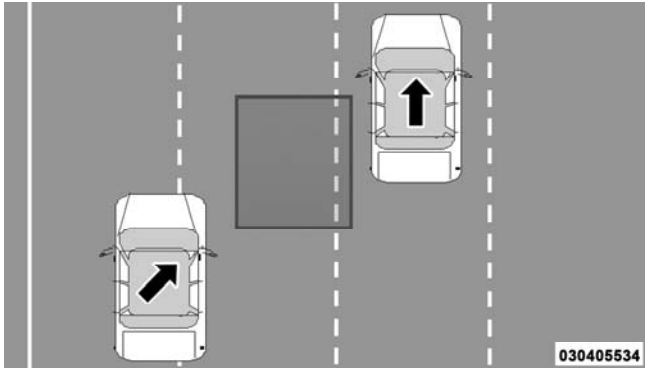

Side Monitoring

Entering From The Rear

Vehicles that come up from behind your vehicle on either side and enter the rear detection zone with a relative speed of less than 30 mph (48 km/h).

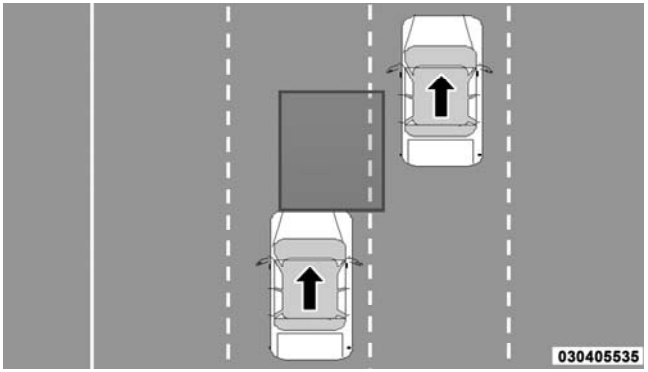

Rear Monitoring

Overtaking Traffic

If you pass another vehicle slowly (with a relative speed of less than 10 mph (16 km/h) and the vehicle remains in the blind spot for approximately 1.5 seconds, the warning light will be illuminated. If the difference in speed between the two vehicles is greater than 10 mph (16 km/h), the warning light will not illuminate.

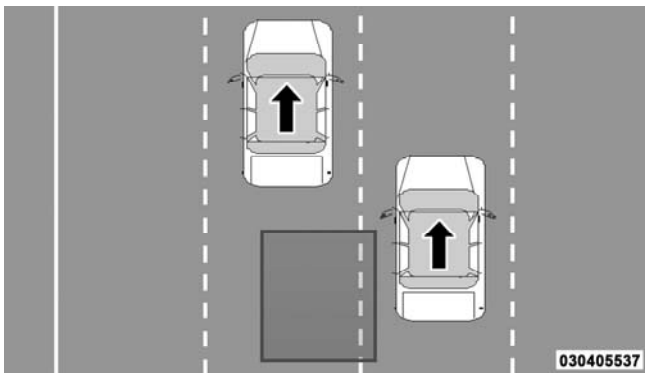

Overtaking/Approaching

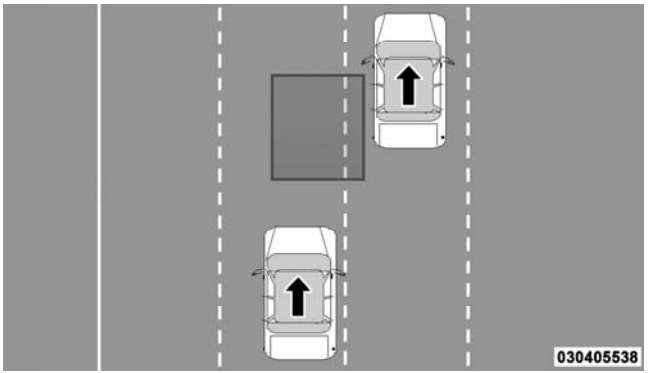

Overtaking/Passing

The BSM system is designed not to issue an alert on stationary objects such as guardrails, posts, walls, foliage, berms, etc. However, occasionally the system may alert on such objects. This is normal operation and your vehicle does not require service.

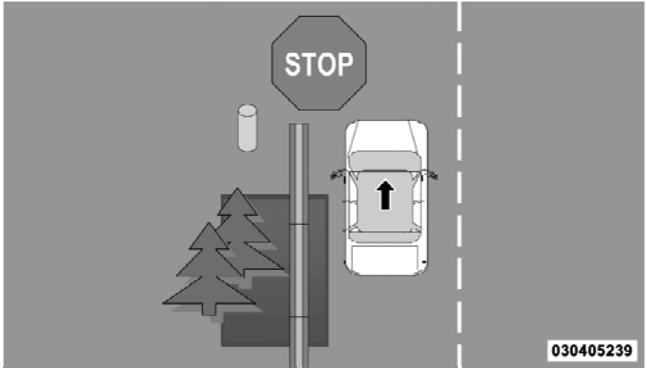

Stationary Objects

The BSM system will not alert you of objects that are traveling in the opposite direction of the vehicle in adjacent lanes.

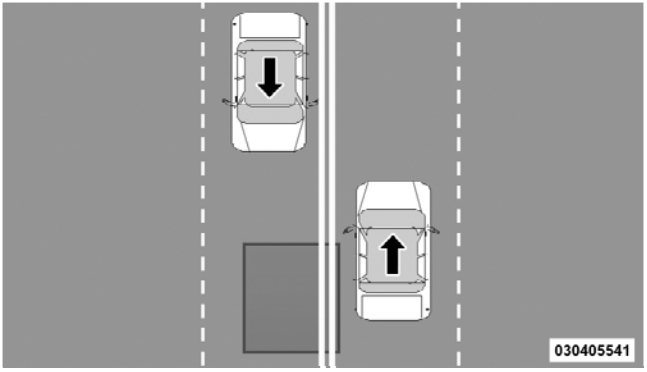

Opposing Traffic

WARNING!

The Blind Spot Monitoring system is only an aid to help detect objects in the blind spot zones. The BSM system is not designed to detect pedestrians, bicyclists, or animals. Even if your vehicle is equipped with the BSM system, always check your vehicle's mirrors, glance over your shoulder, and use your turn signal before changing lanes. Failure to do so can result in serious injury or death.

Rear Cross Path

The Rear Cross Path (RCP) feature is intended to aid the drivers when backing out of parking spaces where their vision of oncoming vehicles may be blocked. Proceed slowly and cautiously out of the parking space until the rear end of the vehicle is exposed. The RCP system will then have a clear view of the cross traffic and if an oncoming vehicle is detected, alert the driver.

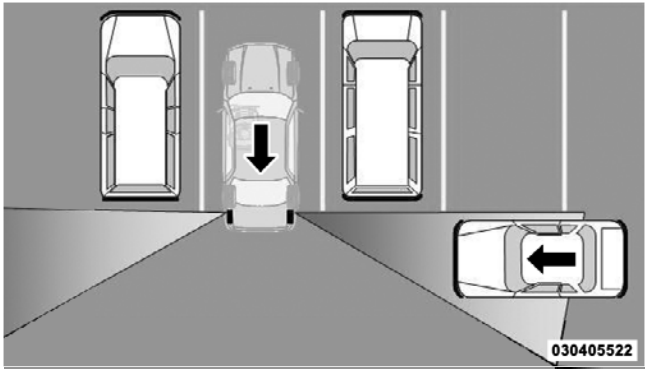

RCP Detection Zones

RCP monitors the rear detection zones on both sides of the vehicle, for objects that are moving toward the side of the vehicle with a minimum speed of approximately 1 to 2 mph (1 km/h to 3 km/h), to objects moving a maximum of approximately 10 mph (16 km/h), such as in parking lot situations.

NOTE: In a parking lot situation, oncoming vehicles can be obscured by vehicles parked on either side. If the sensors are blocked by other structures or vehicles, the system will not be able to alert the driver.

When RCP is on and the vehicle is in REVERSE, the driver is alerted using both the visual and audible alarms, including reducing the radio volume.

WARNING!

RCP is not a Back Up Aid system. It is intended to be used to help a driver detect an oncoming vehicle in a parking lot situation. Drivers must be careful when backing up, even when using RCP. Always check carefully behind your vehicle, look behind you, and be sure to check for pedestrians, animals, other vehicles, obstructions, and blind spots before backing up. Failure to do so can result in serious injury or death.

Modes Of Operation

Three selectable modes of operation are available in the Uconnect Touch™ System. Refer to "Uconnect Touch™ Settings" in "Understanding Your Instrument Panel" for further information.

Blind Spot Alert

When operating in Blind Spot Alert mode, the BSM system will provide a visual alert in the appropriate side view mirror based on a detected object. However, when the system is operating in RCP, the system will respond with both visual and audible alerts when a detected object is present. Whenever an audible alert is requested, the radio volume is reduced.

Blind Spot Alert Lights/Chime

When operating in Blind Spot Alert Lights/Chime mode, the BSM system will provide a visual alert in the appropriate side view mirror based on a detected object. If the turn signal is then activated, and it corresponds to an

alert present on that side of the vehicle, an audible chime will also be sounded. Whenever a turn signal and detected object are present on the same side at the same time, both the visual and audio alerts will be issued. In addition to the audible alert, the radio (if on) volume will be reduced.

NOTE:

- Whenever an audible alert is requested by the BSM system, the radio volume is reduced.
- If the hazard flashers are on, the system will request the appropriate visual alert only.

  When the system is in RCP, the system shall respond with both visual and audible alerts when a detected object is present. Whenever an audible alert is requested, the radio is also muted. Turn/hazard signal status is ignored; the RCP state always requests the chime.

Blind Spot Alert Off

When the BSM system is turned off, there will be no visual or audible alerts from either the BSM or RCP systems.

NOTE: The BSM system will store the current operating mode when the vehicle is shut off. Each time the vehicle is started, the previously stored mode will be recalled and used.

Astronomy Zone — System Temporarily Unavailable

When the vehicle enters this zone the blind spot system will become temporarily unavailable and the EVIC will display the message " Blind spot system unavailable-Astronomy zone". The side mirrors LED's will be lit up and stay lit until the vehicle exits the zone.

Uconnect™ Phone (8.4/8.4N)

Uconnect Touch™ 8.4/8.4 Nav

Uconnect™ Phone is a voice-activated, hands-free, in-vehicle communications system. Uconnect™ Phone allows you to dial a phone number with your mobile phone.

Uconnect™ Phone supports the following features:

Voice Activated Features:

- Hands Free dialing via Voice ("Call John Smiths Mobile" or, "Dial 248 555-1212").
- Hands Free text to speech listening of your incoming SMS messages.
- Hands Free text messaging ("Send a message to John Smiths Mobile").
- Redialing last dialed numbers ("Redial").
- Calling Back the last incoming call number ("Call Back").
- View Call logs on screen ("Show incoming calls", "Show Outgoing calls", "Show missed Calls", "Show Recent Calls").
- Searching Contacts phone number ("Search for John Smith Mobile").

Screen Activated Features:

- Dialing via Keypad using touch-screen.
- Viewing and Calling contacts from Phonebooks displayed on the touch-screen.
- Setting Favorite Contact Phone numbers so the are easily accessible on the Main Phone screen.
- Viewing and Calling contacts from Recent Call logs.
- Reviewing your recent Incoming SMS.
- Sending a text message via the touch-screen.

- Listen to Music on your Bluetooth® Device via the touch-screen.
- Pairing up to 10 phones/audio devices for easy access to connect to them quickly.

NOTE: Your phone must be capable of SMS messaging via Bluetooth® for messaging features to work properly.

Your mobile phone's audio is transmitted through your vehicle's audio system; the system will automatically mute your radio when using the Uconnect™ Phone.

For Uconnect™ customer support, visit the following websites:

- www.chrysler.com/uconnect
- www.dodge.com/uconnect
- www.jeep.com/uconnect
- or call 1–877–855–8400

Uconnect™ Phone allows you to transfer calls between the system and your mobile phone as you enter or exit your vehicle and enables you to mute the system's microphone for private conversation.

WARNING!

Any voice commanded system should be used only in safe driving conditions following local laws and phone use. All attention should be kept on the roadway ahead. Failure to do so may result in an accident causing serious injury or death.

The Uconnect™ Phone is driven through your Bluetooth® "Hands-Free Profile" mobile phone. Uconnect™ features Bluetooth® technology - the global standard that enables different electronic devices to connect to each other without wires or a docking station, so Uconnect™ Phone works no matter where you stow your mobile phone (be it your purse, pocket, or briefcase), as

long as your phone is turned on and has been paired to the vehicle's Uconnect™ Phone. The Uconnect™ Phone allows up to ten mobile phones or audio devices to be linked to the system. Only one linked (or paired) mobile phone and one audio device can be used with the system at a time. The system is available in English, Spanish, or French languages.

Uconnect™ Phone Button

The Uconnect™ Phone Button is used to get into the phone mode and make calls, show recent, incoming, outgoing calls, view phonebook etc., When you press the button you will hear a BEEP. The beep is your signal to give a command.

Uconnect™ Voice Command Button

The Uconnect™ Voice Command VR Button is only used for "barge in" and when you are already in a call and you want to send Tones or make another call.

The VR button is also used to access the Voice Commands for the Uconnect™ Voice Command features if your vehicle is equipped. Please see the Uconnect™ Voice Command section for direction on how to use the VR button.

The Uconnect™ Phone is fully integrated with the vehicle's audio system. The volume of the Uconnect™ Phone can be adjusted either from the radio volume control knob or from the steering wheel radio control (right switch), if so equipped.

Operation

Voice commands can be used to operate the Uconnect™ Phone and to navigate through the Uconnect™ Phone menu structure. Voice commands are required after most Uconnect™ Phone prompts. There are two general methods for how Voice Command works:

1. Say compound commands like "Call John Smith mobile".

2. Say the individual commands and allow the system to guide you to complete the task.

You will be prompted for a specific command and then guided through the available options.

- Prior to giving a voice command, one must wait for the beep, which follows the "Listen" prompt or another prompt.
- For certain operations, compound commands can be used. For example, instead of saying "Call" and then "John Smith" and then "mobile", the following compound command can be said: "Call John Smith mobile".
- For each feature explanation in this section, only the compound command form of the voice command is given. You can also break the commands into parts and say each part of the command when you are asked for it. For example, you can use the compound command form voice command "Search for John Smith", or you can break the compound command form into two voice commands: "Search Contact" and when asked "John Smith". Please remember, the Uconnect™ Phone works best when you talk in a normal conversational tone, as if speaking to someone sitting a few feet/meters away from you.

Natural Speech

Your Uconnect™ Phone Voice system uses a Natural Language Voice Recognition (VR) engine.

Natural speech allows the user to speak commands in phrases or complete sentences. The system filters out certain non-word utterances and sounds such as "ah" and "eh". The system handles fill-in words such as "I would like to".

The system handles multiple inputs in the same phrase or sentence such as “make a phone call” and “to Kelly Smith”. For multiple inputs in the same phrase or sentence, the system identifies the topic or context and provides the associated follow-up prompt such as “Who do you want to call?” in the case where a phone call was requested but the specific name was not recognized.

The system utilizes continuous dialog; when the system requires more information from the user it will ask a question to which the user can respond without pressing the Voice Command VR button.

Voice Command Tree
Refer to “Voice Tree” in this section.

Help Command
If you need assistance at any prompt, or if you want to know your options at any prompt, say “Help” following the beep.

To activate the Uconnect™ Phone from idle, simply press the button and say a command or say “help”. All Uconnect™ Phone sessions begin with a press of the button on the radio control head.

Cancel Command
At any prompt, after the beep, you can say “Cancel” and you will be returned to the main menu.

You can also press the or VR buttons when the system is listening for a command and be returned to the main or previous menu.

NOTE: Pressing the or VR buttons while the system is playing is known as “Barging In”, refer to “Barge In — Overriding Prompts” for further information.

Pair (Link) Uconnect™ Phone To A Mobile Phone

To begin using your Uconnect™ Phone, you must pair your compatible Bluetooth® enabled mobile phone.

To complete the pairing process, you will need to reference your mobile phone Owner's Manual. The Uconnect™ website may also provide detailed instructions for pairing.

NOTE:

- You must have Bluetooth® enabled on your phone to complete this procedure.
- The vehicle must be in PARK.

1. Press the "Phone" soft-key on the screen to begin.
2. If there is no phone currently connected with the system, a pop-up will appear.

3. Select Yes to begin the pairing process. Then, search for available devices on your Bluetooth® enabled mobile phone. When prompted on the phone, enter the name and PIN shown on the Uconnect Touch™ screen.

- If No is selected, touch the "Settings" soft-key from the Uconnect™ Phone main screen,
- Touch the "Add Device" soft-key,
- Search for available devices on your Bluetooth® enabled mobile phone. When prompted on the phone, enter the name and PIN shown on the Uconnect Touch™ screen,
- See Step 4 to complete the process.

4. Uconnect™ Phone will display an in process screen while the system is connecting.

5. When the pairing process has successfully completed, the system will prompt you to choose whether or not this is your favorite phone. Selecting Yes will make this phone the highest priority. This phone will take precedence over other paired phones within range.

Pair Additional Mobile Phones

- Touch the “More” soft-key to begin,
- Touch the “Settings” soft-key,
- Next, touch the “Phone/Bluetooth®” soft-key,
- Touch the “Add Device” soft-key,
- Search for available devices on your Bluetooth® enabled mobile phone. When prompted on the phone, enter the name and PIN shown on the Uconnect Touch™ screen,
- Uconnect™ Phone will display an in process screen while the system is connecting,
- When the pairing process has successfully completed, the system will prompt you to choose whether or not this is your favorite phone. Selecting Yes will make this phone the highest priority. This phone will take precedence over other paired phones within range.

NOTE: For phones which are not made a favorite, the phone priority is determined by the order in which it was paired. The latest phone paired will have the higher priority.

You can also use the following VR commands to bring up the Paired Phone screen from any screen on the radio:

- "Show Paired Phones" or
- "Connect My Phone"

Pair A Bluetooth® Streaming Audio Device

- Touch the "Player" soft-key to begin,
- Change the Source to Bluetooth®,
- Touch the "Bluetooth®" soft-key,
- Touch the "Add Device" soft-key,

NOTE: If there is no device currently connected with the system, a pop-up will appear.

- Search for available devices on your Bluetooth® enabled audio device. When prompted on the device, enter the name and PIN shown on the Uconnect Touch™ screen,
- Uconnect™ Phone will display an in process screen while the system is connecting,
- When the pairing process has successfully completed, the system will prompt you to choose whether or not this is your favorite device. Selecting Yes will make this device the highest priority. This device will take precedence over other paired devices within range.

NOTE: For devices which are not made a favorite, the device priority is determined by the order in which it was paired. The latest device paired will have the higher priority.

You can also use the following VR command to bring up a list of paired audio devices.

- "Show Paired Audio Devices"

Connecting To A Particular Mobile Phone Or Audio Device

Uconnect™ Phone will automatically connect to the highest priority paired phone and/or Audio Device within range. If you would need to choose a particular phone or Audio Device follow these steps:

- Touch the "Settings" soft-key,
- Touch the "Phone/Bluetooth®" soft-key,
- Touch to select the particular Phone or the "Paired Audio Sources" soft-key and then an Audio Device,
- Touch the X to exit out of the Settings screen.

Disconnecting A Phone or Audio Device

- Touch the "Settings" soft-key,
- Touch the "Phone/Bluetooth®" soft-key,
- Touch the + soft-key located to the right of the device name,
- The options pop-up will be displayed,
- Touch the "Disconnect Device" soft-key,
- Touch the X to exit out of the Settings screen.

Deleting A Phone Or Audio Device

- Touch the "Settings" soft-key,
- Touch the Phone/Bluetooth® soft-key,
- Touch the + soft-key located to the right of the device name for a different Phone or Audio Device than the currently connected device,
- The options pop-up will be displayed,
- Touch the "Delete Device" soft-key,
- Touch the X to exit out of the Settings screen.

Making A Phone Or Audio Device A Favorite

- Touch the "Settings" soft-key,
- Touch the "Phone/Bluetooth®" soft-key,
- Touch the + soft-key located to the right of the device name,
- The options pop-up will be displayed,
- Touch the "Make Favorite" soft-key; you will see the chosen device move to the top of the list,
- Touch the X to exit out of the Settings screen.

Phonebook Download — Automatic Phonebook Transfer From Mobile Phone

If equipped and specifically supported by your phone, Uconnect™ Phone automatically downloads names (text names) and number entries from the mobile phone's phonebook. Specific Bluetooth® Phones with Phone Book Access Profile may support this feature. See Uconnect™ website for supported phones.

- To call a name from a downloaded mobile phonebook, follow the procedure in "Call by Saying a Name" section.
- Automatic download and update, if supported, begins as soon as the Bluetooth® wireless phone connection is made to the Uconnect™ Phone, for example, after you start the vehicle.
- A maximum of 1000 entries per phone will be downloaded and updated every time a phone is connected to the Uconnect™ Phone.
- Depending on the maximum number of entries downloaded, there may be a short delay before the latest downloaded names can be used. Until then, if available, the previously downloaded phonebook is available for use.

- Only the phonebook of the currently connected mobile phone is accessible.
- This downloaded phonebook cannot be edited or deleted on the Uconnect™ Phone. These can only be edited on the mobile phone. The changes are transferred and updated to Uconnect™ Phone on the next phone connection.

Managing Your Favorite Phonebook

There are three ways you can add an entry to your Favorite Phonebook.

1. During an active call of a number to make a favorite, touch and hold a favorite button on the top of the phone main screen.

2. After loading the mobile phonebook, select phonebook from the Phone main screen, then select the appropriate number. Touch the + next to the selected number to display the options pop-up. In the pop-up select "Add to Favorites".

NOTE: If the Favorites list is full, you will be asked to remove an existing favorite.

3. From the Phone main screen, select phonebook. From the phonebook screen, select the "Favorites" soft-key and then select the + soft-key located to the right of the phonebook record. Select an empty entry and touch the + on that selected entry. When the Options pop-up appears,

touch "Add from Mobile". You will then be asked which contact and number to choose from your mobile phonebook. When complete the new favorite will be shown.

To Remove A Favorite

- To remove a Favorite, select phonebook from the Phone main screen.
- Next select Favorites on the left side of the screen and then touch the + Options soft-key.
- Touch the + next to the Favorite you would like to remove.

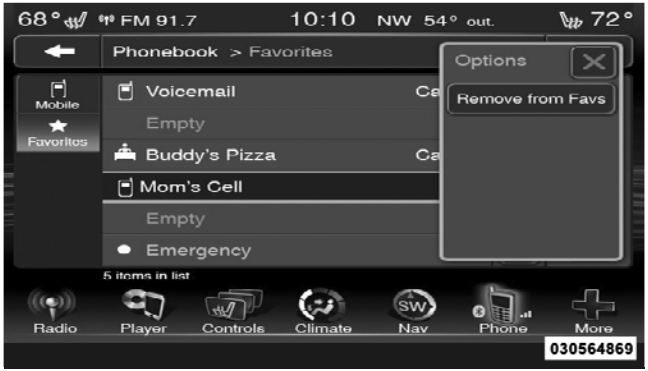

- The Options pop-up will display, touch "Remove from Favs".

Emergency And Towing Assistance

The Emergency and Towing Favorite numbers can only be altered. These cannot be deleted and the names cannot be changed.

To change the Emergency or Towing number follow these steps.

- Touch the "Phonebook" soft-key from the Phone main screen.
- Touch the "Favorites" soft-key. Next scroll to the bottom of the list to locate the Emergency and Towing Favorites.
- Touch the + Options soft-key.
- Touch the + next to appropriate Favorite that is to be altered.

- The Options pop-up will appear and you can choose between Editing the number or resetting the number to default.

Phone Call Features

The following features can be accessed through the Uconnect™ Phone if the feature(s) are available and supported by Bluetooth® on your mobile service plan. For example, if your mobile service plan provides three-way calling, this feature can be accessed through the Uconnect™ Phone. Check with your mobile service provider for the features that you have.

Ways To Initiate A Phone Call

Listed below are all the ways you can initiate a phone call with Uconnect™ Phone.

- Redial
- Dial by touching in the number
- Voice Commands (Dial by Saying a Name, Call by Saying a Phonebook Name, Redial, or Call Back)
- Favorite Phonebook
- Mobile Phonebook
- Recent Call Log
- SMS Message Viewer

NOTE: All of the above operations except Redial can be done with 1 call or less active.

Dial By Saying A Number

- Press the button to begin,
- After the "Listening" prompt and the following beep, say "Dial 248-555-1212",
- The Uconnect™ Phone will dial the number 248-555-1212.

Call By Saying A Phonebook Name

- Press the button to begin,
- After the "Listening" prompt and the following beep, say "Call John Doe Mobile",
- The Uconnect™ Phone will dial the number associated with John Doe, or if there are multiple numbers it will ask which number you want to call for John Doe.

Call Controls

The touch-screen allows you to control the following call features:

- Answer
- End
- Ignore
- Hold/unhold
- Mute/unmute
- Transfer the call to/from the phone
- Swap 2 active calls
- Join 2 active calls together

Touch-Tone Number Entry

- Touch the "Phone" soft-key,
- Touch the "Dial" soft-key,
- The Touch-Tone screen will be displayed,
- Use the numbered soft-keys to enter the number and touch "Call".

To send a touch tone using Voice Recognition (VR), press the VR button while in a call and say "Send 1234#" or you can say "Send Voicemail Password" if Voicemail password is stored in your mobile phonebook.

Recent Calls

You may browse up to 34 of the most recent of each of the following call types:

- Incoming Calls
- Outgoing Calls
- Missed Calls
- All Calls

These can be accessed by touching the "recent calls" soft-key on the Phone main screen.

You can also press the button and say "Show my incoming calls" from any screen and the Incoming calls will be displayed.

NOTE: Incoming can also be replaced with "Outgoing", "Recent" or "Missed".

Answer Or Ignore An Incoming Call — No Call Currently In Progress

When you receive a call on your mobile phone, the Uconnect™ Phone will interrupt the vehicle audio system, if on, and will ask if you would like to answer the call. Press the button to accept the call. To ignore the call, touch the "Ignore" soft-key on the touch-screen. You can also touch the "answer" soft-key or touch the blue caller ID box.

Answer Or Ignore An Incoming Call — Call Currently In Progress

If a call is currently in progress and you have another incoming call, you will hear the same network tones for call waiting that you normally hear when using your mobile phone. Press the phone button, answer soft-key or caller ID box to place the current call on hold and answer the incoming call.

NOTE: The Uconnect™ Phone compatible phones in the market today do not support rejecting an incoming call when another call is in progress. Therefore, the user can only answer an incoming call or ignore it.

Making A Second Call While Current Call Is In Progress

To make a second call while you are currently on a call, press the VR button and say "Dial" or "Call" followed by the phone number or phonebook entry you wish to call. The first call will be on hold while the second call is in progress. Or you can place a call on hold by touching the Hold soft-key on the Phone main screen, then dial a number from the dialpad, recent calls, SMS Inbox or from the phonebooks. To go back to the first call, refer to "Toggling Between Calls" in this section. To combine two calls, refer to "Join Calls" in this section.

Place/Retrieve A Call From Hold

During an active call, touch the "Hold" soft-key on the Phone main screen.

Toggling Between Calls

If two calls are in progress (one active and one on hold), touch the "Swap" soft-key on the Phone main screen. Only one call can be placed on hold at a time.

You can also press the button to toggle between the active and held phone call.

Join Calls
When two calls are in progress (one active and one on hold), touch the "Join Calls" soft-key on the Phone main screen to combine all calls into a Conference Call.

Call Termination
To end a call in progress, momentarily press the button or the end soft-key. Only the active call(s) will be terminated and if there is a call on hold, it will become the new active call. If the active call is terminated by the far end, a call on hold may not become active automatically. This is cell phone-dependent.

Redial

- Press the "Redial" soft-key,
- or press the and after the "Listening" prompt and the following beep, say "Redial",
- After the "Listening" prompt and the following beep, say "Redial",
- The Uconnect™ Phone will call the last number that was dialed from your mobile phone.

Call Continuation
Call continuation is the progression of a phone call on the Uconnect™ Phone after the vehicle ignition key has been switched to OFF.

NOTE: The call will remain within the vehicle audio system until the phone becomes out of range for the Bluetooth® connection. It is recommended to press the "transfer" soft-key when leaving the vehicle.

Uconnect™ Phone Features

Emergency Assistance
If you are in an emergency and the mobile phone is reachable:

- Pick up the phone and manually dial the emergency number for your area.

If the phone is not reachable and the Uconnect™ Phone is operational, you may reach the emergency number as follows:

- Press the button to begin.
- After the "Listening" prompt and the following beep, say "Call Emergency or Dial Emergency" and the Uconnect™ Phone will instruct the paired mobile phone to call the emergency number. This feature is supported in the U.S., Canada, and Mexico.

NOTE:

- The Emergency call may also be initiated by using the touch-screen.
- The emergency number dialed is based on the country where the vehicle is purchased (911 for the U.S. and Canada and 060 for Mexico). The number dialed may not be applicable with the available mobile service and area.
- The Uconnect™ Phone does slightly lower your chances of successfully making a phone call as to that for the mobile phone directly.

WARNING!

Your phone must be turned on and connected to the Uconnect™ Phone to allow use of this vehicle feature in emergency situations, when the mobile phone has network coverage and stays connected to the Uconnect™ Phone.

Towing Assistance

If you need towing assistance:

- Press the button to begin.
- After the "Listening" prompt and the following beep, say "Towing Assistance".

NOTE:

- The towing assistance call may also be initiated by touch.
- The towing assistance number dialed is based on the country where the vehicle is purchased (1-800-528-2069 for the U.S., 1-877-213-4525 for Canada, 55-14-3454 for Mexico City and 1-800-712-3040 for outside Mexico City in Mexico). Please refer to the Chrysler Group LLC 24-Hour "Towing Assistance" coverage details in the Warranty Information Booklet and on the 24–Hour Towing Assistance Card.

Voice Mail Calling

To learn how to access your voice mail, refer to "Working with Automated Systems".

Working With Automated Systems

This method is used in instances where one generally has to press numbers on the mobile phone keypad while navigating through an automated telephone system.

You can use your Uconnect™ Phone to access a voice mail system or an automated service, such as a paging service or automated customer service line. Some services require immediate response selection. In some instances, that may be too quick for use of the Uconnect™ Phone.

When calling a number with your Uconnect™ Phone that normally requires you to enter in a touch-tone sequence on your mobile phone keypad, you can utilize the touch-screen or press the VR button and say the word "Send" then the sequence you wish to enter. For example, if required to enter your PIN followed with a pound, (3 7 4 6 #), you can press the VR button and say, "Send 3 7 4 6 #". Saying "Send" followed by a number, or sequence of numbers, is also to be used for navigating through an automated customer service center menu structure, and to leave a number on a pager.

You can also send stored mobile phonebook entries as tones for fast and easy access to voice mail and pager entries. For example, if you previously created a Phonebook entry with First and/or Last Name as "Voicemail Password", then if you press the VR button and say "Send Voicemail Password" the Uconnect™ Phone will then send the corresponding phone number associated with the phonebook entry, as tones over the phone.

NOTE:

- The first number encountered for that contact will be sent. All other numbers entered for that contact will be ignored.
- You may not hear all of the tones due to mobile phone network configurations. This is normal.
- Some paging and voice mail systems have system time out settings that are too short and may not allow the use of this feature.
- Pauses, wait or other characters that are supported by some phones are not supported over Bluetooth®. These additional symbols will be ignored in the dialing a numbered sequence.

Barge In — Overriding Prompts

The VR button can be used when you wish to skip part of a prompt and issue your voice command immediately. For example, if a prompt is asking "There are 2 numbers with the name John. Say the full name" you could press the VR button and say, "John Smith" to select that option without having to listen to the rest of the voice prompt.

Voice Response Length

It is possible for you to choose between Brief and Detailed Voice Response Length.

- Touch the "More" soft-key, then touch the "Settings" soft-key,

- Touch the "Display" soft-key, then scroll down to Voice Response Length,
- Select either "Brief" or "Detailed" by touching the box next to the selection. A check-mark will appear to show your selection.

Phone And Network Status Indicators

Uconnect™ Phone will provide notification to inform you of your phone and network status when you are attempting to make a phone call using Uconnect™ Phone. The status is given for network signal strength and phone battery strength.

Dialing Using The Mobile Phone Keypad

You can dial a phone number with your mobile phone keypad and still use the Uconnect™ Phone (while dialing via the mobile phone keypad, the user must exercise caution and take precautionary safety measures). By dialing a number with your paired Bluetooth® mobile phone, the audio will be played through your vehicle's audio system. The Uconnect™ Phone will work the same as if you dial the number using voice command.

NOTE: Certain brands of mobile phones do not send the dial ring to the Uconnect™ Phone to play it on the vehicle audio system, so you will not hear it. Under this situation, after successfully dialing a number the user may feel that the call did not go through even though the call is in progress. Once your call is answered, you will hear the audio.

Mute/Un-Mute (Mute OFF)

When you mute the Uconnect™ Phone, you will still be able to hear the conversation coming from the other party, but the other party will not be able to hear you. In order to mute the Uconnect™ Phone simply touch the Mute button on the Phone main screen.

Advanced Phone Connectivity

Transfer Call To And From Mobile Phone

The Uconnect™ Phone allows ongoing calls to be transferred from your mobile phone to the Uconnect™ Phone without terminating the call. To transfer an ongoing call from your Uconnect™ Phone paired mobile phone to the Uconnect™ Phone or vice versa, press the Transfer button on the Phone main screen.

Connect Or Disconnect Link Between The Uconnect™ Phone And Mobile Phone

If you would like to connect or disconnect the Bluetooth® connection between a Uconnect™ Phone paired mobile phone and the Uconnect™ Phone, follow the instructions described in your mobile phone User's Manual.

Things You Should Know About Your Uconnect™ Phone

Voice Command

- For best performance, adjust the rearview mirror to provide at least ½ in (1 cm) gap between the overhead console (if equipped) and the mirror.
- Always wait for the beep before speaking.
- Speak normally, without pausing, just as you would speak to a person sitting a few feet/meters away from you.
- Make sure that no one other than you is speaking during a voice command period.
- Performance is maximized under:
  - low-to-medium blower setting,
  - low-to-medium vehicle speed,

- low road noise,
- smooth road surface,
- fully closed windows,
- dry weather condition.

- Even though the system is designed for users speaking in North American English, French, and Spanish accents, the system may not always work for some.
- When navigating through an automated system such as voice mail, or when sending a page, before speaking the digit string, make sure to say “Send”.
- Storing names in your favorites phonebook when the vehicle is not in motion is recommended.
- Phonebook (Mobile and Favorites) name recognition rate is optimized when the entries are not similar.
- You can say “O” (letter “O”) for “0” (zero).
- Even though international dialing for most number combinations is supported, some shortcut dialing number combinations may not be supported.
- In a convertible vehicle, system performance may be compromised with the convertible top down.

Far End Audio Performance

- Audio quality is maximized under:
  - low-to-medium blower setting,
  - low-to-medium vehicle speed,
  - low road noise,
  - smooth road surface,
  - fully closed windows,
  - dry weather conditions, and
  - operation from the driver’s seat.

- Performance, such as audio clarity, echo, and loudness to a large degree rely on the phone and network, and not the Uconnect™ Phone.
- Echo at the far end can sometimes be reduced by lowering the in-vehicle audio volume.
- In a convertible vehicle, system performance may be compromised with the convertible top down.

SMS

Uconnect™ Phone can read or send new messages on your phone.

Your phone must support SMS over Bluetooth® in order to use this feature. If the Uconnect™ Phone determines your phone is not compatible with SMS messaging over Bluetooth® the "Messaging" button will be greyed out and the feature will not be available for use.

NOTE: Uconnect™ Phone SMS is only available when the vehicle is not in moving.

3

Read Messages:

If you receive a new text message while your phone is connected to Uconnect™ Phone, an announcement will be made to notify you that you have a new text message.

Once a message is received and viewed or listened to, you will have the following options:

- Send a Reply
- Forward
- Call

Send Messages Using Soft-Keys:

You can send messages using Uconnect™ Phone. To send a new message:

- Touch the “Phone” soft-key,
- Touch the “messaging” soft-key then “New Message”,

- Touch one of the 18 preset messages and the person you wish to send the message to,

- If multiple numbers are available for the contact select which number you would like to have the message sent,
- Press “Send” or “Cancel”.

Send Messages Using Voice Commands:

- Press the button,
- After the “Listening” prompt and the following beep, say “Send message to John Smith mobile”,
- After the system prompts you for what message you want to send, say the message you wish to send or say “List”. There are 18 preset messages.

While the list of defined messages are being read, you can interrupt the system by pressing the VR button and saying the message you want to send.

After the system confirms that you want to send your message to John Smith, your message will be sent.

List of Preset Messages:

1. Yes.
2. No.
3. Okay.
4. I can't talk right now.
5. Call me.
6. I'll call you later.
7. I'm on my way.
8. Thanks.
9. I'll be late.
10. I will be <number> minutes late.
11. See you in <number> minutes.
12. Stuck in traffic.
13. Start without me.
14. Where are you?
15. Are you there yet?
16. I need directions.
17. I'm lost.
18. See you later.

Bluetooth® Communication Link

Mobile phones have been found to lose connection to the Uconnect™ Phone. When this happens, the connection can generally be reestablished by switching the phone OFF/ON. Your mobile phone is recommended to remain in Bluetooth® ON mode.

Power-Up

After switching the ignition key from OFF to either the ON or ACC position, or after a language change, you must wait at least 15 seconds prior to using the system.

Voice Tree

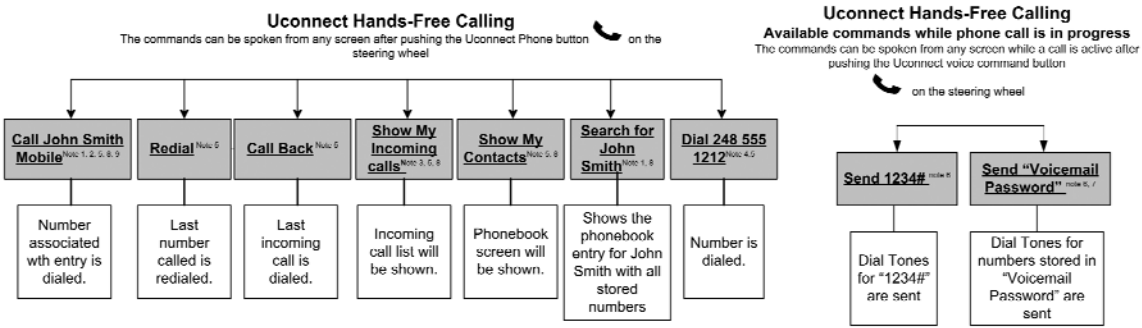

030863306

NOTE:

- You can replace “John Smith” with any name in your mobile or favorite phone book. You can also say “Send a message to John Smith” and the system will ask you which phone number you want to send a message to for John Smith.
- You can replace “Mobile” with “Home”, “Work” or “Other”.
- You can replace “Incoming Calls” with “Outgoing Calls” or “Missed Calls”.
- Messaging commands only work if the Uconnect system is equipped with this feature and the mobile phone supports messaging over Bluetooth.
- You can replace “248 555 1212” with any phone number supported by your Mobile phone.
- You can replace “4” with any message number shown on the screen.
- If your phone does not support phonebook download or call log download over Bluetooth than these commands will return a response that the contact does not exist in the phonebook.
- Available Voice Commands are shown in bold face and underlined in the gray shaded boxes.

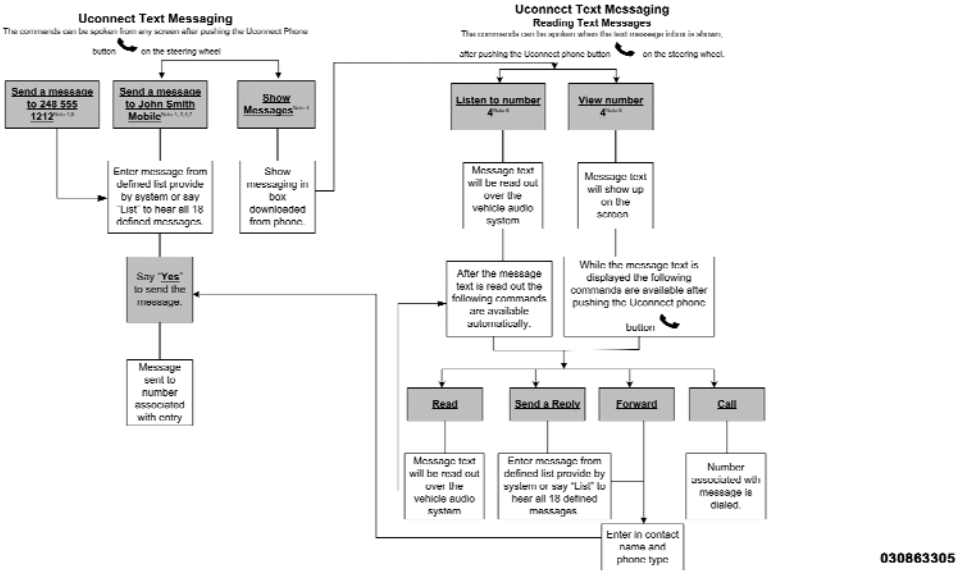
Uconnect Text Messaging
The commands can be spoken from any screen after pushing the Uconnect Phone button on the steering wheel
Send a message to 248 555 1212
Send a message to John Smith Mobile
Show Messages
Enter message from defined list provide by system or say "List" to hear all 18 defined messages.
Show messaging in box downloaded from phone.
Say "Yes" to send the message.
Message sent to number associated with entry
Uconnect Text Messaging
Reading Text Messages
The commands can be spoken when the text message inbox is shown, after pushing the Uconnect phone button on the steering wheel.
Listen to number 4
View number 4
Message text will be read out over the vehicle audio system
Message text will show up on the screen
After the message text is read out the following commands are available automatically.
While the message text is displayed the following commands are available after pushing the Uconnect phone button
Read
Send a Reply
Forward
Call
Message text will be read out over the vehicle audio system
Enter message from defined list provide by system or say "List" to hear all 18 defined messages
Number associated with message is dialed.
Enter in contact name and phone type
030863305

NOTE:

- You can replace “John Smith” with any name in your mobile or favorite phone book. You can also say “Send a message to John Smith” and the system will ask you which phone number you want to send a message to for John Smith.
- You can replace “Mobile” with “Home”, “Work” or “Other”.
- You can replace “Incoming Calls” with “Outgoing Calls” or “Missed Calls”.
- Messaging commands only work if the Uconnect system is equipped with this feature and the mobile phone supports messaging over Bluetooth.
- You can replace “248 555 1212” with any phone number supported by your Mobile phone.
- You can replace “4” with any message number shown on the screen.
- If your phone does not support phonebook download or call log download over Bluetooth than these commands will return a response that the contact does not exist in the phonebook.
- Available Voice Commands are shown in bold face and underlined in the gray shaded boxes.

General Information

This device complies with Part 15 of the FCC rules and RSS 210 of Industry Canada. Operation is subject to the following conditions:

- Changes or modifications not expressly approved by the party responsible for compliance could void the user’s authority to operate the equipment.
- This device may not cause harmful interference.
- This device must accept any interference received, including interference that may cause undesired operation.

VOICE COMMAND

Uconnect Touch™ 8.4/8.4 Nav

The Uconnect™ Voice Command system allows you to control your AM, FM radio, satellite radio, disc player, SD Card, USB/iPod and Sirius Travel Link.

NOTE: Take care to speak into the Voice Command system as calmly and normally as possible. The ability of the Voice Command system to recognize user voice commands may be negatively affected by rapid speaking or a raised voice level.

WARNING!

Any voice commanded system should be used only in safe driving conditions following local laws. All attention should be kept on the roadway ahead. Failure to do so may result in a collision causing serious injury or death.

When you press the Uconnect™ Voice Command button, you will hear a beep. The beep is your signal to give a command.

If no command is spoken the system will say one of two responses:

- I didn't understand
- I didn't get that, etc.,

If a command is not spoken a second time, the system will respond with an error and give some direction as what can be said based on the context you are in. After three consecutive failures of a spoken command the VR session with end.

Pressing the Uconnect™ Voice Command VR button while the system is speaking is known as "barging in." The system will be interrupted, and after the beep, you can say a command. This will become helpful once you start to learn the options.

NOTE: At any time, you can say the words "Cancel" or "Help".

These commands are universal and can be used from any menu. All other commands can be used depending upon the active application.

When using this system, you should speak clearly and at a normal speaking volume.

The system will best recognize your speech if the windows are closed, and the heater/air conditioning fan is set to low.

At any point, if the system does not recognize one of your commands, you will be prompted to repeat it.

To hear available commands, press the Uconnect™ Voice Command VR button and say "Help". You will hear available commands for the screen displayed.

Natural Speech

Natural speech allows the user to speak commands in phrases or complete sentences. The system filters out certain non-word utterances and sounds such as “ah” and “eh”. The system handles fill-in words such as “I would like to”.

The system handles multiple inputs in the same phrase or sentence such as “make a phone call” and “to Kelly Smith”. For multiple inputs in the same phrase or sentence, the system identifies the topic or context and provides the associated follow-up prompt such as “Who do you want to call?” in the case where a phone call was requested but the specific name was not recognized.

The system utilizes continuous dialog; when the system requires more information from the user it will ask a question to which the user can respond without pressing the Uconnect™ Voice Command VR button.

Uconnect™ Voice Commands

The Uconnect™ Voice Command system understands two types of commands. Universal commands are available at all times. Local commands are available if the supported radio mode is active.

Start a dialogue by pressing the Uconnect™ Voice Command VR button.

Changing the Volume

1. Start a dialogue by pressing the Voice Command VR button.

2. Say a command (e.g., “Help”).

3. Use the ON/OFF VOLUME rotary knob to adjust the volume to a comfortable level while the Voice Command system is speaking. Please note the volume setting for Voice Command is different than the audio system.

Starting Voice Recognition (VR) Session in Radio/Player Modes

In this mode, you can say the following commands:

NOTE: The commands can be said on any screen when a call is not active after pushing the Uconnect™ Voice Command VR button.

Disc

To switch to the disc mode, say "Change source to Disc". This command can be given in any mode or screen:

- "Track" (#) (to change the track)

Voice Tree

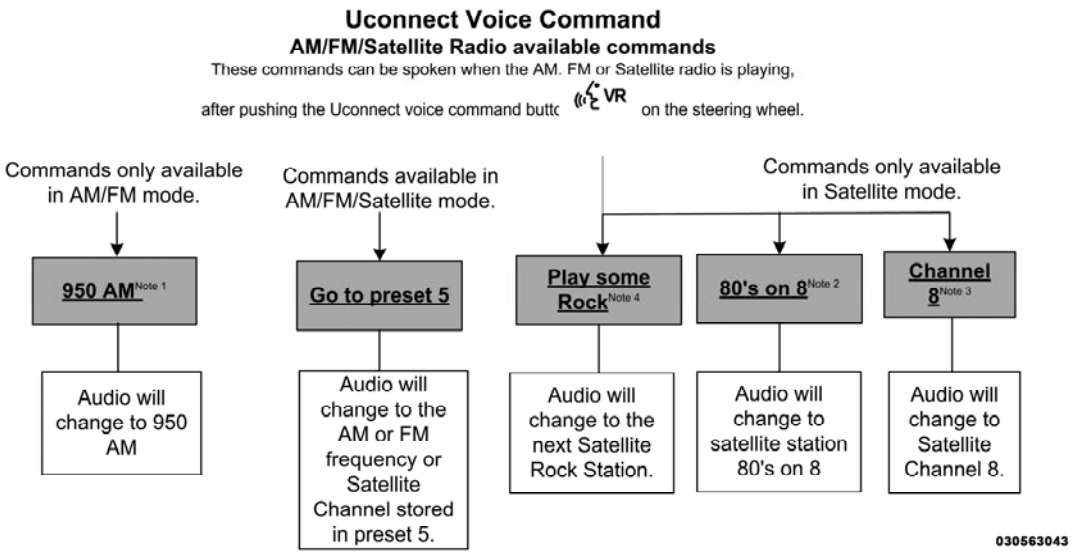
Uconnect Voice Command
AM/FM/Satellite Radio available commands
These commands can be spoken when the AM. FM or Satellite radio is playing,
after pushing the Uconnect voice command butto
VR
on the steering wheel.
Commands only available in AM/FM mode.
Commands available in AM/FM/Satellite mode.
Commands only available in Satellite mode.
950 AM Note 1
Go to preset 5
Play some Rock Note 4
80's on 8 Note 2
Channel 8 Note 3
Audio will change to 950 AM
Audio will change to the AM or FM frequency or Satellite Channel stored in preset 5.
Audio will change to the next Satellite Rock Station.
Audio will change to satellite station 80's on 8
Audio will change to Satellite Channel 8.
030563043

NOTE:

1. You can replace “950 AM” with any other AM or FM frequency, such as “98.7 FM”.

2. You can replace “80’s on 8” with any other satellite station name received by the radio.

3. You can replace “8” with any other satellite station named received by the radio.

4. You can replace “rock” with any of the satellite music types.

5. Available Voice Commands are shown in bold face and shaded grey.

Uconnect Hands-Free Music Control

These commands can be spoken when playing music from your SD card, USB device, CD or iPod, after pushing the Uconnect voice command button VR on the steering wheel.

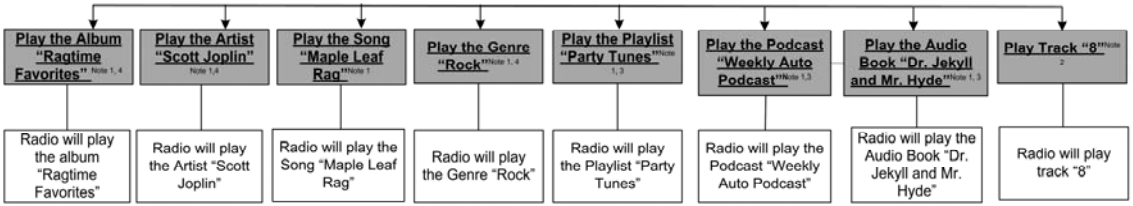

030563046

NOTE:

1. You can replace the album, artist, song, genre, playlist, podcast and audio book names with any corresponding names on the current device that is playing.

2. You can replace “8” with any track on the CD that is currently playing. Command is only available when CD is playing.

3. Playlist, Podcast and audio book commands are only available when the iPod is connected and playing.

4. VR commands, Albums, Artists, and Genre names are based on the music database provided by Gracenote.

5. Available Voice Commands are shown in bold face and shaded grey.

Uconnect Voice Command

Travel Link commands

The commands can be said on any screen when a call is not active

after pushing the Uconnect voice command button VR on the steering wheel.

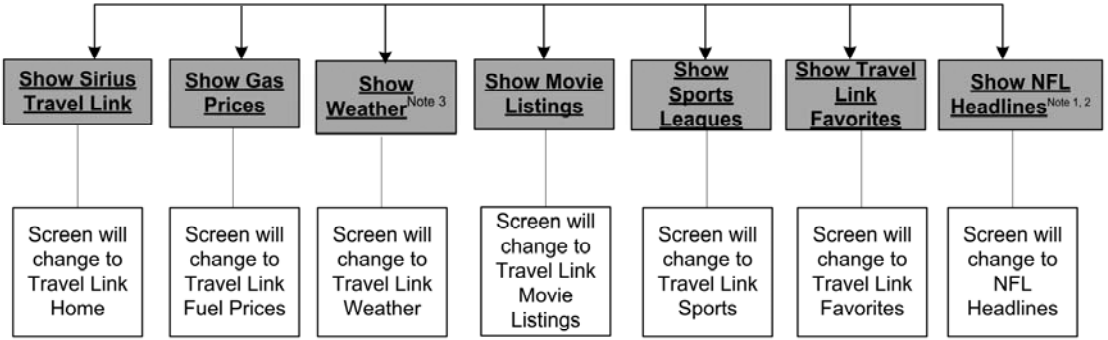

030563045

NOTE:

1. You can replace “NFL” with any league shown on the sports league screen. For example you can say “Show MLB headlines” or “Show PGA headlines”.

2. You can replace “Headlines” with any menu items shown on a league screen. For example you can say “Show NFL Schedule and results” or “Show NCAA Basketball AP top 25” or “Show Major League Baseball Teams”.

3. You can also say “Show Current Weather” or “Show extended weather” or “Show five day forecast” or “Show ski info” to get other forecasts.

4. Available Voice Commands are shown in bold face and shaded grey.

Uconnect Voice Command
Non-phone – Universal & Mode Commands

The commands can be spoken on any screen when not on a phone call,

after pushing the Uconnect voice command button VR on the steering wheel.

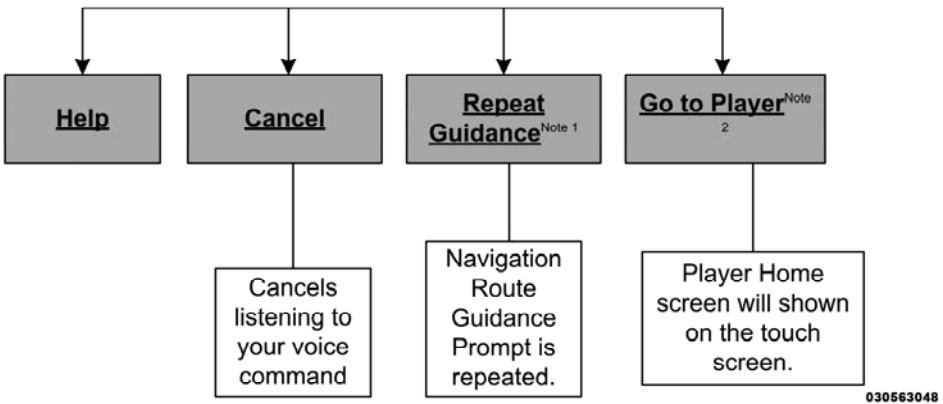

NOTE:

1. Only available with Navigation equipped vehicles.

2. You can replace “Player” with “Radio”, “Navigation”, “Phone”, “Climate”, “More” or “Settings”.

3. Navigation commands only work if equipped with Navigation.

4. Available Voice Commands are shown in bold face and shaded grey.

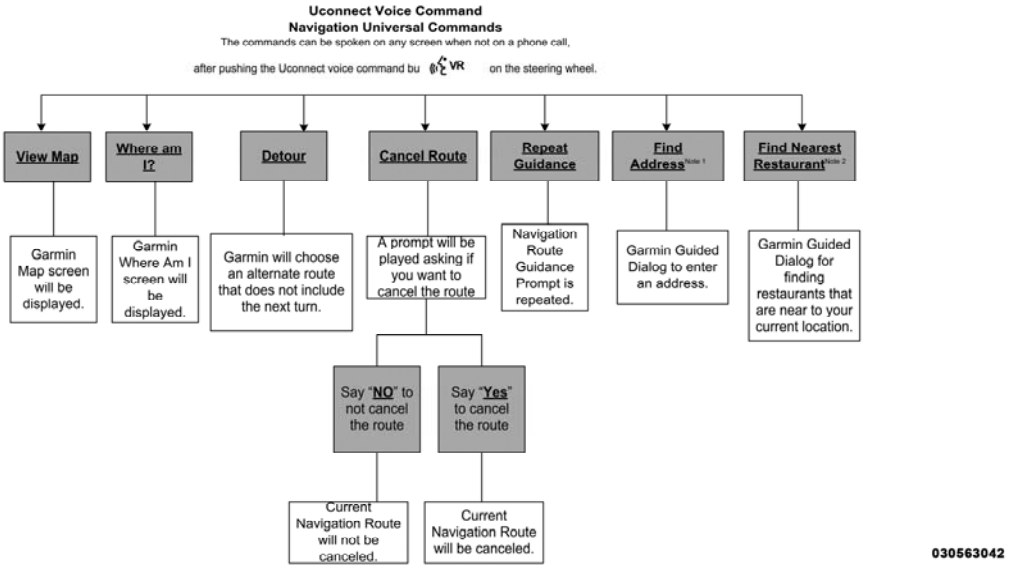
Uconnect Voice Command
Navigation Universal Commands
The commands can be spoken on any screen when not on a phone call,
after pushing the Uconnect voice command bu VR on the steering wheel.
View Map
Where am I?
Detour
Cancel Route
Repeat Guidance
Find Address Note 1
Find Nearest Restaurant Note 2
Garmin Map screen will be displayed.
Garmin Where Am I screen will be displayed.
Garmin will choose an alternate route that does not include the next turn.
A prompt will be played asking if you want to cancel the route
Navigation Route Guidance Prompt is repeated.
Garmin Guided Dialog to enter an address.
Garmin Guided Dialog for finding restaurants that are near to your current location.
Say "NO" to not cancel the route
Say "Yes" to cancel the route
Current Navigation Route will not be canceled.
Current Navigation Route will be canceled.
030563042

NOTE:

1. You can also say “Find City”, “Find Favorite”, “Find Play by Category”, “Find Play by Name”, “Find Recently Found”, “Where to?” or “Go Home”.

2. You can say “Find Nearest” then “Restaurant”, “Fuel”, “Transit”, “Lodging”, “Shopping”, “Bank”, “Entertainment”, “Recreation”, “Attractions”, “Community”, “Auto Services”, “Hospitals”, “Parking”, “Airport”, “Police Stations”, “Fire Stations”, or “Auto Dealers”.

Uconnect Hands-Free Calling

Universal & Connect Commands

The commands can be spoken from any screen after pushing the Uconnect Phone button on the steering wheel

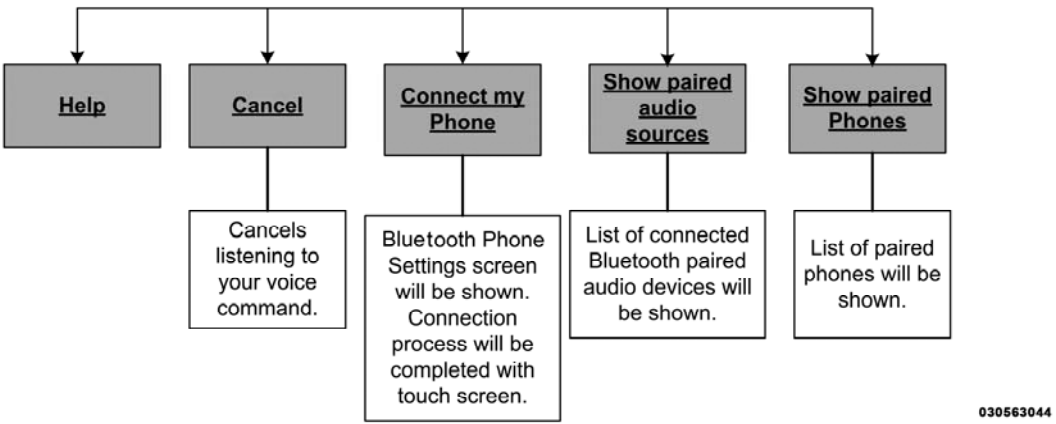

NOTE: Available Voice Commands are shown in bold face and shaded grey.

SEATS

Seats are a part of the Occupant Restraint System of the vehicle.

WARNING!

- **It is dangerous to ride in a cargo area, inside or outside of a vehicle. In a collision, people riding in these areas are more likely to be seriously injured or killed.**

(Continued)

WARNING! (Continued)

- **Do not allow people to ride in any area of your vehicle that is not equipped with seats and seat belts. In a collision, people riding in these areas are more likely to be seriously injured or killed.**
- **Be sure everyone in your vehicle is in a seat and using a seat belt properly.**

Power Seats

On models equipped with power seats, the switch is located on the outboard side of the seat near the floor. Use this switch to move the driver's seat up or down, forward or rearward or to recline the seatback.

NOTE: The passenger's seat will move up or down, forward or rearward.

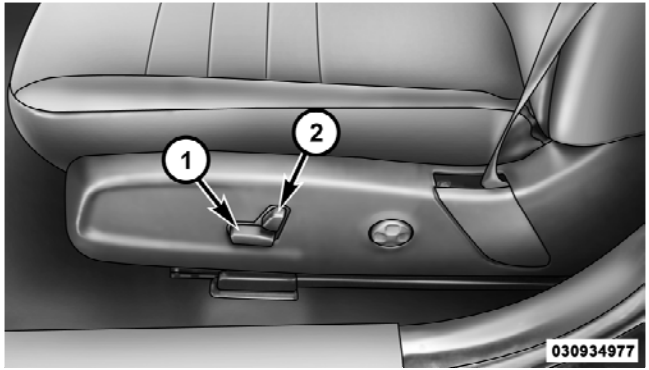

Power Seat Switches

1 — Seat Control
2 — Seatback Control

Adjusting The Seat Forward Or Rearward

The seat can be adjusted both forward and rearward. Push the seat switch forward or rearward, the seat will move in the direction of the switch. Release the switch when the desired position is reached.

Adjusting The Seat Up Or Down

The height of the seats can be adjusted up or down. Pull upward or push downward on the seat switch, the seat will move in the direction of the switch. Release the switch when the desired position is reached.

Tilting The Seat Up Or Down

The angle of the seat cushion can be adjusted in four directions. Pull upward or push downward on the front or rear of the seat switch, the front or rear of the seat cushion will move in the direction of the switch. Release the switch when the desired position is reached.

Reclining The Seatback

The angle of the seatback can be adjusted forward or rearward. Push the seatback switch forward or rearward, the seat will move in the direction of the switch. Release the switch when the desired position is reached.

WARNING!

- **Adjusting a seat while driving may be dangerous. Moving a seat while driving could result in loss of control which could cause a collision and serious injury or death.**
- **Seats should be adjusted before fastening the seat belts and while the vehicle is parked. Serious injury or death could result from a poorly adjusted seat belt.**

(Continued)

WARNING! (Continued)

- **Do not ride with the seatback reclined so that the shoulder belt is no longer resting against your chest. In a collision you could slide under the seat belt, which could result in serious injury or death.**

CAUTION!

Do not place any article under a power seat or impede its ability to move as it may cause damage to the seat controls. Seat travel may become limited if movement is stopped by an obstruction in the seat's path.

Power Lumbar — If Equipped

Vehicles equipped with power driver or passenger seats may be also be equipped with power lumbar. The power lumbar switch is located on the outboard side of the power seat. Push the switch forward or rearward to increase or decrease the lumbar support. Push the switch upward or downward to raise or lower the lumbar support.

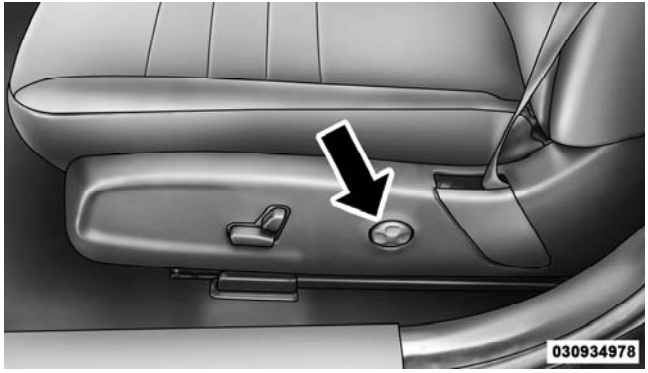

Power Lumbar Switch

Heated Seats — If Equipped

On some models, the front and rear seats may be equipped with heaters in both the seat cushions and seatbacks.

The front driver and passenger heated seats are operated using the Uconnect Touch™ System.

WARNING!

- **Persons who are unable to feel pain to the skin because of advanced age, chronic illness, diabetes, spinal cord injury, medication, alcohol use, exhaustion or other physical condition must exercise care when using the seat heater. It may cause burns even at low temperatures, especially if used for long periods of time.**

(Continued)

WARNING! (Continued)

- **Do not place anything on the seat that insulates against heat, such as a blanket or cushion. This may cause the seat heater to overheat. Sitting in a seat that has been overheated could cause serious burns due to the increased surface temperature of the seat.**

Front Heated Seat Operations — Uconnect Touch™ 8.4 and 8.4 Nav:

Press the "Controls" soft-key located on the bottom of the Uconnect Touch™ display.

Controls Soft-Key

Press the "Driver" or "Passenger" seat soft-key once to select HI-level heating. Press the soft-key a second time to select LO-level heating. Press the soft-key a third time to shut the heating elements OFF.

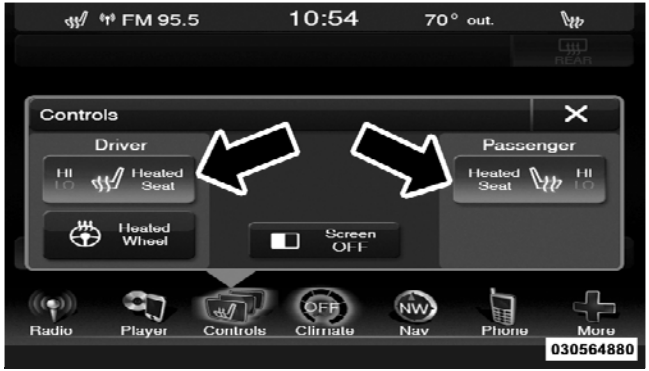

Heated Seats Soft-Keys

NOTE: Once a heat setting is selected, heat will be felt within two to five minutes.

When the HI-level setting is selected, the heater will provide a boosted heat level during the first four minutes of operation. Then, the heat output will drop to the normal HI-level. If the HI-level setting is selected, the system will automatically switch to LO-level after a maximum of 60 minutes of continuous operation. At that time, the display will change from HI to LO, indicating the change. The LO-level setting will turn OFF automatically after a maximum of 45 minutes.

Vehicle Equipped With Remote Start

On models that are equipped with remote start, the driver's heated seat can be programmed to come on during a remote start. Refer to "Remote Starting System — If Equipped" in "Things To Know Before Starting Your Vehicle" for further information.

Rear Heated Seats

On some models, the two outboard seats are equipped with heated seats. The heated seat switches for these seats are located on the rear of the center console. There are two heated seat switches that allow the rear passengers to operate the seats independently.

You can choose from HI, LO or OFF heat settings. Amber indicator lights in each switch indicate the level of heat in use. Two indicator lights will illuminate for HI, one for LO and none for OFF.

Press the switch once to select HI-level heating. Press the switch a second time to select LO-level heating. Press the switch a third time to shut the heating elements OFF.

NOTE:

- Once a heat setting is selected, heat will be felt within two to five minutes.
- The engine must be running for the heated seats to operate.

When the HI-level setting is selected, the heater will provide a boosted heat level during the first four minutes of operation. Then, the heat output will drop to the normal HI-level. If the HI-level setting is selected, the system will automatically switch to LO-level after a maximum of 60 minutes of continuous operation. At that time, the number of illuminated LEDs changes from two to one, indicating the change. The LO-level setting will turn OFF automatically after a maximum of 45 minutes.

Ventilated Seats — If Equipped

On some models, both the driver and passenger seats are ventilated. Located in the seat cushion and seatback are small fans that draw air from the seat surface through fine perforations in the seat cover to help keep the driver and front passenger cooler in higher ambient temperatures.

The ventilated seats can be operated using the Uconnect Touch™ System.

Front Ventilated Seat Operation — Uconnect Touch™ 8.4/8.4 Nav:

Press the "Controls" soft-key located on the bottom of the Uconnect Touch™ display.

Controls Soft-Key

Press the "Driver" or "Passenger" seat soft-key once to select HI-level ventilation. Press the soft-key a second time to select LO-level ventilation. Press the soft-key a third time to shut off the seat ventilation.

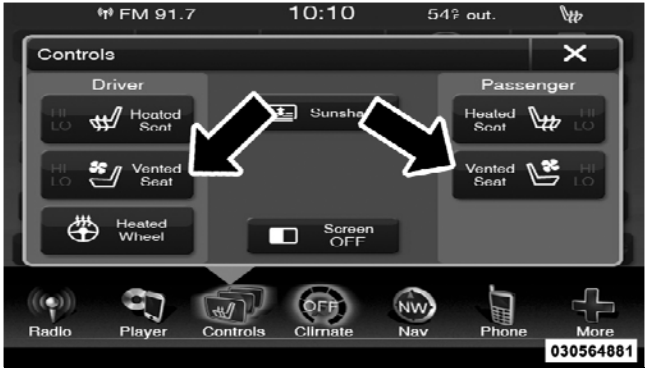

Ventilated Seats Soft-Keys

NOTE: The engine must be running for the ventilated seats to operate.

Vehicles Equipped With Remote Start

On models that are equipped with remote start, the driver's ventilated seat can be programmed to come on during a remote start. Refer to "Remote Starting System — If Equipped" in "Things To Know Before Starting Your Vehicle" for further information.

Head Restraints

Head restraints are designed to reduce the risk of injury by restricting head movement in the event of a rear impact. Head restraints should be adjusted so that the top of the head restraint is located above the top of your ear.

WARNING!

The head restraints for all occupants must be properly adjusted prior to operating the vehicle or occupying a seat. Head restraints should never be adjusted while the vehicle is in motion. Driving a vehicle with the head restraints improperly adjusted or removed could cause serious injury or death in the event of a collision.

Active Head Restraints — Front Seats

The front driver and passenger seats are equipped with Active Head Restraints (AHR). In the event of a rear impact the AHRs will automatically extend forward minimizing the gap between the back of the occupants head and the AHR.

The AHRs will automatically return to their normal position following a rear impact. If the AHRs do not return to their normal position see your authorized dealer immediately.

To raise the head restraint, pull upward on the head restraint. To lower the head restraint, press the push button, located at the base of the head restraint, and push downward on the head restraint.

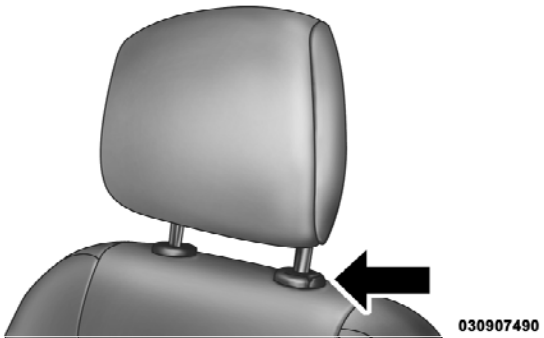

Push Button

NOTE: The head restraints should only be removed by qualified technicians, for service purposes only. If either of the head restraints require removal, see your authorized dealer.

WARNING!

Do not place items over the top of the Active Head Restraint, such as coats, seat covers or portable DVD players. These items may interfere with the operation of the Active Head Restraint in the event of a collision and could result in serious injury or death.

Rear Head Restraints

The center head restraint has two positions, up or down. When the center seat is being occupied the head restraint should be in the raised position. When there are no occupants in the center seat the head restraint can be lowered for maximum visibility for the driver.

To raise the head restraint, pull upward on the head restraint. To lower the head restraint, press the push button, located at the base of the head restraint, and push downward on the head restraint.

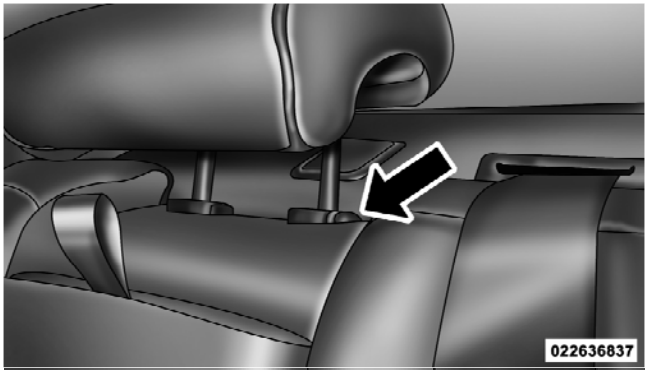

Push Button

NOTE: The outboard head restraints are not adjustable. Refer to "Occupant Restraints" in "Things To Know Before Starting Your Vehicle" for tether routing.

Folding Rear Seat

The rear seatbacks can be folded forward to provide an additional storage area. To fold the rear seatback, pull on the loops located on the upper seatback.

NOTE: These loops can be tucked away when not in use.

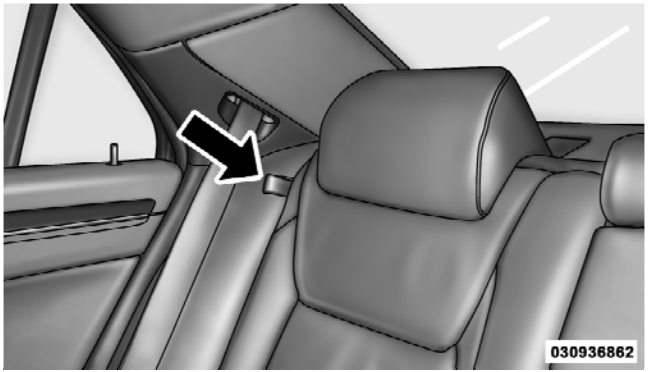

Rear Seatback Loop

After releasing the seatback, it can be folded forward.

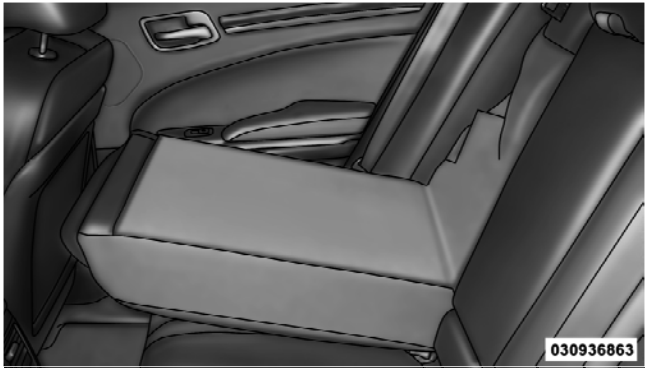

Folded Rear Seatback

When the seatback is folded to the upright position, make sure it is latched by strongly pulling on the top of the seatback above the seat strap.

WARNING!

- **Be certain that the seatback is securely locked into position. If the seatback is not securely locked into position, the seat will not provide the proper stability for child seats and/or passengers. An improperly latched seat could cause serious injury.**
- **The cargo area in the rear of the vehicle (with the rear seatbacks in the locked-up or folded down position) should not be used as a play area by children when the vehicle is in motion. They could be seriously injured in a collision. Children should be seated and using the proper restraint system.**

DRIVER MEMORY SEAT — IF EQUIPPED

This feature allows the driver to store up to two different memory profiles for easy recall through a memory switch. Each memory profile contains desired position settings for the driver seat, side mirrors, adjustable pedals (if equipped), and power tilt and telescopic steering column (if equipped) and a set of desired radio station presets. Your Remote Keyless Entry (RKE) transmitter can also be programmed to recall the same positions when the UNLOCK button is pressed.

NOTE:

- Only one RKE transmitter can be linked to each of the memory positions.
- Passive Entry door handles cannot be linked to the memory function. Use either the memory recall switch or the RKE transmitter (if linked to the memory feature) to recall memory positions 1 or 2.

The memory seat switch is located on the driver's door trim panel. The switch consists of three buttons: The (S) button, which is used to activate the memory save function and the (1) and (2) buttons which are used to recall either of two pre-programmed memory profiles.

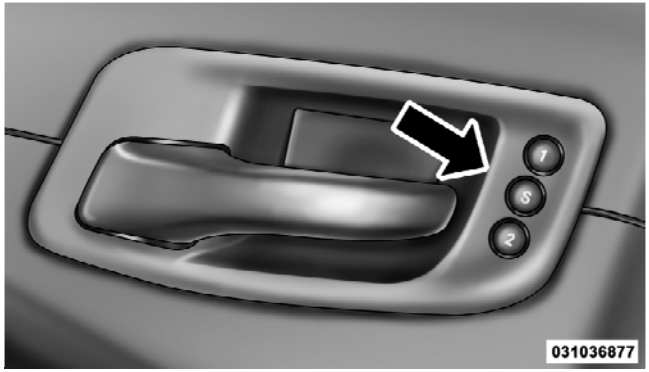

Memory Seat Switch

Programming The Memory Feature

To create a new memory profile, perform the following:

1. Place the ignition into the RUN position.

2. Adjust all memory profile settings to desired preferences (i.e., seat, side mirror, adjustable pedals [if equipped], power tilt and telescopic steering column [if equipped], and radio station presets).

3. Press and release the S (Set) button on the memory switch.

4. Within five seconds, press and release either of the memory buttons (1) or (2). The Electronic Vehicle Information Center (EVIC) will display which memory position has been set.

NOTE:

- Memory profiles can be set without the vehicle in PARK, but the vehicle must be in PARK to recall a memory profile.

- The Recall Memory with Remote Key Unlock feature can be enabled through the Uconnect Touch™ System, refer to "Uconnect Touch™ Settings" in "Understanding Your Instrument Panel" for further information.

Linking And Unlinking The Remote Keyless Entry Transmitter To Memory

Your RKE transmitters can be programmed to recall one of two pre-programmed memory profiles by pressing the UNLOCK button on the RKE transmitter.

To program your RKE transmitters, perform the following:

1. Remove the Key Fob from the ignition (or change the ignition to OFF, for vehicles equipped with Keyless Enter-N-Go).

2. Select desired memory profile (1) or (2).

3. Once the profile has been recalled, press and release the SET (S) button on the memory switch, then press and release button (1) or (2) accordingly. "Memory Profile Set" (1 or 2) will display in the instrument cluster on vehicles equipped with the EVIC.

4. Press and release the LOCK button on the RKE transmitter within 10 seconds.

NOTE: Your RKE transmitters can be unlinked to your memory settings by pressing the SET (S) button followed by the UNLOCK button on the RKE transmitter in Step 4 above.

Memory Position Recall

NOTE: The vehicle must be in PARK to recall memory positions. If a recall is attempted when the vehicle is not in PARK, a message will display in the EVIC (if equipped).

To recall the memory settings for driver one, press MEMORY button number (1) on the driver's door or the UNLOCK button on the RKE transmitter linked to memory position 1.

To recall the memory setting for driver two, press MEMORY button number (2) on the driver's door or the UNLOCK button on the RKE transmitter linked to memory position 2.

A recall can be cancelled by pressing any of the MEMORY buttons (S, 1, or 2) on the driver's door during a recall. When a recall is cancelled, the driver seat, side mirror, adjustable pedals (if equipped), and power tilt and telescopic steering column (if equipped) stop moving. A delay of one second will occur before another recall can be selected.

Easy Entry/Exit Seat (Available With Memory Seat Only)

This feature provides automatic driver seat positioning to enhance driver mobility when entering and exiting the vehicle.

The distance the driver seat moves depends on where you have the driver seat positioned when you remove the Key Fob from the ignition (or change the ignition to OFF, for vehicles equipped with Keyless Enter-N-Go).

- When you remove the Key Fob from the ignition (or change the ignition to OFF, for vehicles equipped with Keyless Enter-N-Go), the driver seat will move about 2.4 in (60 mm) rearward if the driver seat position is greater than or equal to 2.7 in (67.7 mm) forward of the rear stop. The seat will return to its previously set position when you place the ignition into the ACC or RUN position.
- When you remove the Key Fob from the ignition (or change the ignition to OFF, for vehicles equipped with Keyless Enter-N-Go), the driver seat will move to a position 0.3 in (7.7 mm) forward of the rear stop if the driver seat position is between 0.9 in and 2.7 in (22.7 mm and 67.7 mm) forward of the rear stop. The seat will return to its previously set position when you place the ignition to the ACC or RUN position.

- The Easy Entry/Easy Exit feature is disabled when the driver seat position is less than 0.9 in (22.7 mm) forward of the rear stop. At this position, there is no benefit to the driver by moving the seat for Easy Exit or Easy Entry.

Each stored memory setting will have an associated Easy Entry and Easy Exit position.

NOTE: The Easy Entry/Easy Exit feature can be enabled or disabled using the Uconnect Touch™ System, refer to "Uconnect Touch™ Settings" in "Understanding Your Instrument Panel" for further information.

TO OPEN AND CLOSE THE HOOD

Two latches must be released to open the hood.

1. Pull the hood release lever located under the left side of the instrument panel.

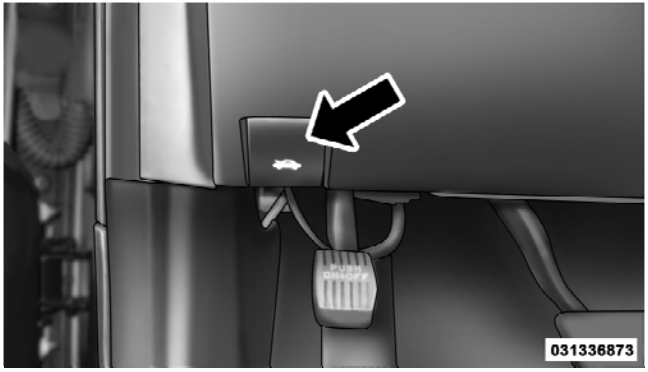

Hood Release Lever

2. Move to the outside of the vehicle and push the safety catch to the left. The safety catch is located under the center front edge of the hood.

Hood Safety Latch

Use the hood prop rod (if equipped) to secure the hood in the open position.

CAUTION!

To prevent possible damage, do not slam the hood to close it. Lower the hood, until it is open approximately 6 in (15 cm), and then drop it. This should secure both latches. Never drive your vehicle unless the hood is fully closed, with both latches engaged.

WARNING!

Be sure the hood is fully latched before driving your vehicle. If the hood is not fully latched, it could open when the vehicle is in motion and block your vision. Failure to follow this warning could result in serious injury or death.

LIGHTS

Headlight Switch

The headlight switch is located on the left side of the instrument panel. This switch controls the operation of the headlights, parking lights, instrument panel lights, instrument panel light dimming, interior lights and fog lights.

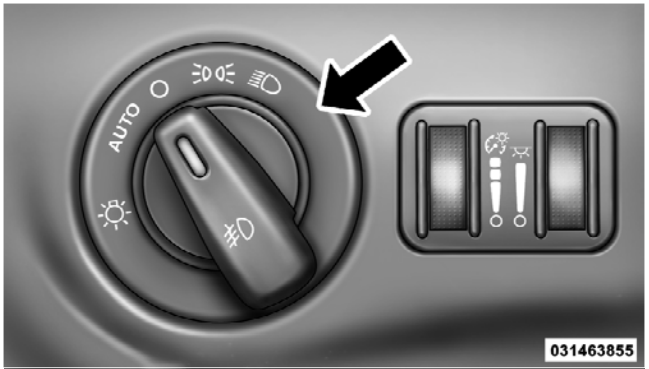

Headlight Switch

Rotate the headlight switch clockwise to the first detent for parking light and instrument panel light operation. Rotate the headlight switch to the second detent for headlight, parking light and instrument panel light operation.

Automatic Headlights — If Equipped

This system automatically turns the headlights on or off according to ambient light levels. To turn the system on, rotate the headlight switch counterclockwise to the AUTO position. When the system is on, the headlight time delay feature is also on. This means the headlights will stay on for up to 90 seconds after you place the ignition into the OFF position. To turn the automatic system off, move the headlight switch out of the AUTO position.

NOTE: The engine must be running before the headlights will come on in the automatic mode.

Headlights On With Wipers (Available With Automatic Headlights Only)

When this feature is active, the headlights will turn on approximately 10 seconds after the wipers are turned on if the headlight switch is placed in the AUTO position. In addition, the headlights will turn off when the wipers are turned off if they were turned on by this feature.

NOTE: The Headlights On with Wipers feature can be turned on or off using the Uconnect Touch™ System, refer to "Uconnect Touch™ Settings" in "Understanding Your Instrument Panel" for further information.

Headlight Time Delay

This feature provides the safety of headlight illumination for up to 90 seconds (programmable) when leaving your vehicle in an unlit area.

To activate the delay feature, place the ignition in the OFF position while the headlights are still on. Then, turn off the headlights within 45 seconds. The delay interval begins when the headlight switch is turned off.

If you turn the headlights or parking lights on, or place the ignition in ACC or RUN, the system will cancel the delay.

If you turn the headlights off before the ignition, they will turn off in the normal manner.

NOTE:

- The lights must be turned off within 45 seconds of placing the ignition in the OFF position to activate this feature.
- The headlight delay time is programmable using the Uconnect Touch™ System, refer to "Uconnect Touch™ Settings" in "Understanding Your Instrument Panel" for further information.

SmartBeam™ — If Equipped

The SmartBeam™ system provides increased forward lighting at night by automating high beam control through the use of a digital camera mounted on the inside rearview mirror. This camera detects vehicle specific light and automatically switches from high beams to low beams until the approaching vehicle is out of view.

NOTE:

- SmartBeam™ can be turned on or off using the Uconnect Touch™ System, refer to "Uconnect Touch™ Settings" in "Understanding Your Instrument Panel" for further information.
- Broken, muddy, or obstructed headlights and taillights of vehicles in the field of view will cause headlights to remain on longer (closer to the vehicle). Also, dirt, film, and other obstructions on the windshield or camera lens will cause the system to function improperly.

If the windshield or SmartBeam™ mirror is replaced, the SmartBeam™ mirror must be re-aimed to ensure proper performance. See your local authorized dealer.

To Activate

1. Turn the headlight switch to the AUTO headlight position.

2. Push the multifunction lever away from you (toward front of vehicle) to engage the high beam mode.

NOTE: This system will not activate until the vehicle is at or above 20 mph (32 km/h).

To Deactivate

1. Pull the multifunction lever toward you (or rearward in car) to manually deactivate the system (normal operation of low beams).

2. Push back on the multifunction lever once again to reactivate the system.

Steering Directed Headlights — If Equipped

This system automatically swivels the headlight beam pattern horizontally to provide increased illumination in the direction the vehicle is steering.

NOTE:

- Each time the Steering Directed Headlight System is turned on, the headlights will initialize by performing a brief sequence of rotations.
- The Steering Directed Headlight System is active only when the vehicle is moving forward.

The Steering Directed Headlight System can be turned On or Off using the Uconnect Touch™ System, refer to "Uconnect Touch™ Settings" in "Understanding Your Instrument Panel" for further information.

Daytime Running Lights (DRL)

The LED Daytime Running Lights will come on whenever the ignition is placed in the RUN position, the headlights are off and the parking brake is off. The headlight switch must be used for normal nighttime driving.

NOTE: The Daytime Running Lights can be turned on and off using the Uconnect Touch™ System, refer to "Uconnect Touch™ Settings" in "Understanding Your Instrument Panel" for further information.

Lights-On Reminder

If the headlights or parking lights are on after the ignition is placed in the OFF position, a chime will sound to alert the driver when the driver's door is opened.

Fog Lights — If Equipped

The front fog light switch is built into the headlight switch.

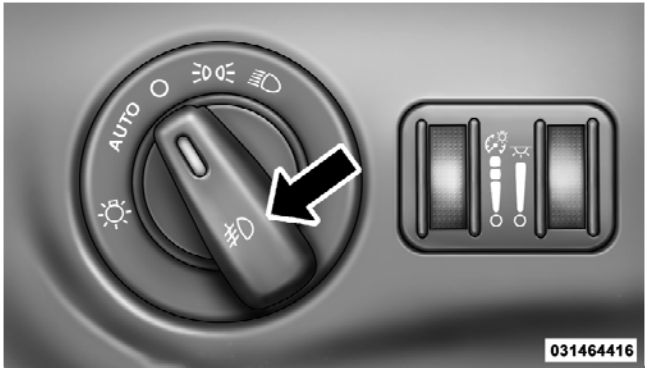

Fog Light Switch

To activate the front fog lights, turn on the parking lights or the low beam headlights and press the headlight switch. To turn off the front fog lights, either press the headlight switch a second time or turn off the headlight switch.

An indicator light in the instrument cluster illuminates when the fog lights are turned on.

NOTE: The fog lights will operate with the low beam headlights or parking lights on. However, selecting the high beam headlights will turn off the fog lights.

Multifunction Lever

The multifunction lever controls the operation of the turn signals, headlight beam selection and passing lights. The multifunction lever is located on the left side of the steering column.

031563089

Multifunction Lever

Turn Signals

Move the multifunction lever up or down and the arrows on each side of the instrument cluster flash to show proper operation of the front and rear turn signal lights.

NOTE:

- If either light remains on and does not flash, or there is a very fast flash rate, check for a defective outside light bulb. If an indicator fails to light when the lever is moved, it would suggest that the indicator bulb is defective.
- A "Turn Signal On" message will appear in the EVIC (if equipped) and a continuous chime will sound if the vehicle is driven more than 1 mile (1.6 km) with either turn signal on.

Lane Change Assist

Tap the lever up or down once, without moving beyond the detent, and the turn signal (right or left) will flash three times then automatically turn off.

High/Low Beam Switch

Push the multifunction lever away from you to switch the headlights to high beam. Pull the multifunction lever toward you to switch the headlights back to low beam.

Flash-To-Pass

You can signal another vehicle with your headlights by lightly pulling the multifunction lever toward you. This will turn on the high beams headlights until the lever is released.

NOTE: If a flash-to-pass request is held for 20 seconds then the high beams will shut off until another Flash-To-Pass or high beam command is requested.

Front Map/Reading Lights

The front map/reading lights are mounted in the overhead console.

Front Map/Reading Lights

Each light can be turned on by pressing a switch on either side of the console. These buttons are backlit for night time visibility. To turn the lights off, press the switch a second time. The lights will also turn on when the UNLOCK button on the Remote Keyless Entry (RKE) is pressed.

Front Map/Reading Light Switches

Courtesy Lights

The courtesy lights can be turned on by pressing the top corner of the lens. To turn the lights off, press the lens a second time.

Courtesy Lights

Ambient Light

The overhead console is equipped with an ambient light feature. This light casts illumination for improved visibility of the floor center console and PRNDL area.

Ambient Light

Interior Lights

The interior lights come on when a door is opened.

To protect the battery, the interior lights will turn off automatically 10 minutes after the ignition switch is moved to the LOCK position. This will occur if the interior lights were switched on manually or are on because a door is open. This includes the glove box light, but not the trunk light. To restore interior light operation, either turn the ignition switch ON or cycle the light switch.

Dimmer Controls

The dimmer control is part of the headlight switch and is located on the left side of the instrument panel.

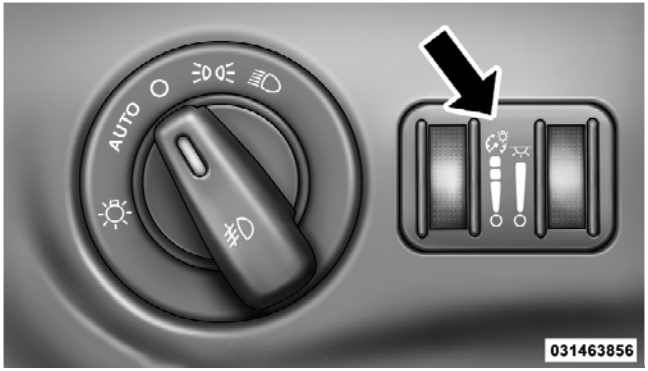

Dimmer Controls

With the parking lights or headlights on, rotating the left dimmer control upward will increase the brightness of the instrument panel lights and lighted cupholders (if equipped).

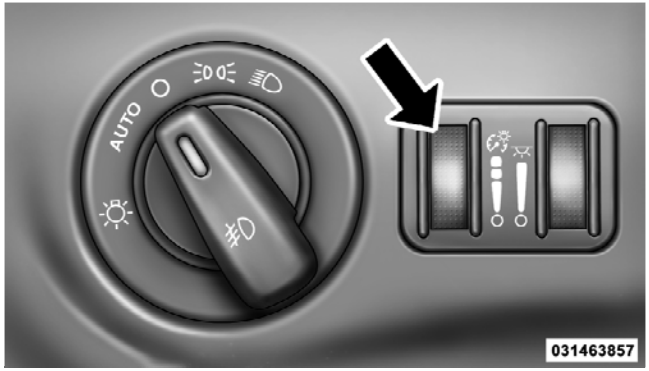

Instrument Panel Dimmer

Ambient Light Control

Rotate the right dimmer control upward or downward to increase or decrease the brightness of the door handle lights and ambient light located in the overhead console.

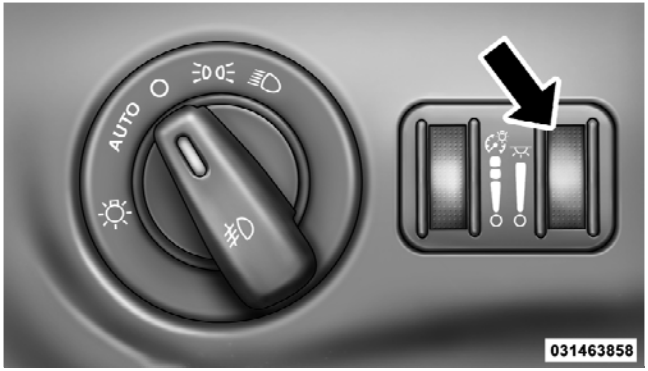

Door Handle/Ambient Light Dimmer

Dome Light Position

Rotate the dimmer control completely upward to the second detent to turn on the interior lights. The interior lights will remain on when the dimmer control is in this position.

Interior Light Defeat (OFF)

Rotate the dimmer control to the extreme bottom OFF position. The interior lights will remain off when the doors are open.

Parade Mode (Daytime Brightness Feature)

Rotate the dimmer control upward to the first detent. This feature brightens all text displays such as the odometer, EVIC (if equipped), and radio when the parking lights or headlights are on.

WINDSHIELD WIPERS AND WASHERS

The multifunction lever operates the windshield wipers and washer when the ignition is placed in the ON/RUN or ACC position. The multifunction lever is located on the left side of the steering column.

031563089

Windshield Wiper/Washer Control

Intermittent Wiper System

Use the intermittent wiper when weather conditions make a single wiping cycle with a variable pause between cycles desirable. Rotate the end of the multifunction lever to the first detent position, and then turn the end of the lever to select the desired delay interval. There are four delay settings, which allow you to regulate the wipe interval from a minimum of one cycle every second to a maximum of approximately 18 seconds between cycles. The delay intervals will double in duration when the vehicle speed is 10 mph (16 km/h) or less.

Wiper Operation

Rotate the end of the multifunction lever to the first detent, past the intermittent settings for low-speed wiper operation, or to the second detent past the intermittent settings for high-speed wiper operation.

CAUTION!

- **Turn the windshield wipers off when driving through an automatic car wash. Damage to the windshield wipers may result if the wiper control is left in any position other than off.**
- **In cold weather, always turn off the wiper switch and allow the wipers to return to the "Park" position before turning off the engine. If the wiper switch is left on and the wipers freeze to the windshield, damage to the wiper motor may occur when the vehicle is restarted.**
- **Always remove any buildup of snow that prevents the windshield wiper blades from returning to the off position. If the windshield wiper control is turned off and the blades cannot return to the off position, damage to the wiper motor may occur.**

Mist Feature

Rotate the end of the lever downward to the Mist position to activate a single wipe cycle to clear off road mist or spray from a passing vehicle. The wipers will continue to operate until you release the multifunction lever.

NOTE: The mist feature does not activate the washer pump; therefore, no washer fluid will be sprayed on the windshield. The wash function must be used in order to spray the windshield with washer fluid.

Windshield Washers

To use the washer, push the multifunction lever inward (toward the steering column) and hold it for as long as washer spray is desired.

If you activate the washer while the windshield wiper control is in the delay range, the wipers will operate for two wipe cycles after releasing the lever and then resume the intermittent interval previously selected.

If you activate the washer while the windshield wiper is turned off, the wipers will operate for three wipe cycles and then turn off.

WARNING!

Sudden loss of visibility through the windshield could lead to a collision. You might not see other vehicles or other obstacles. To avoid sudden icing of the windshield during freezing weather, warm the windshield with the defroster before and during windshield washer use.

Headlights On With Wipers (Available with Automatic Headlights Only)

When this feature is active, the headlights will turn on approximately 10 seconds after the wipers are turned on if the headlight switch is placed in the AUTO position. In addition, the headlights will turn off when the wipers are turned off if they were turned on by this feature.

The Headlights On with Wipers feature can be turned on and off using the Uconnect Touch™ System, refer to "Uconnect Touch™ Settings" in "Understanding Your Instrument Panel" for further information.

Rain Sensing Wipers — If Equipped

This feature senses moisture on the windshield and automatically activates the wipers for the driver. The feature is especially useful for road splash or over spray from the windshield washers of the vehicle ahead. Rotate the end of the multifunction lever to one of four settings to activate this feature.

The sensitivity of the system can be adjusted with the multifunction lever. Wiper delay position 1 is the least sensitive, and wiper delay position 4 is the most sensitive. Setting 3 should be used for normal rain conditions. Settings 1 and 2 can be used if the driver desires less wiper sensitivity. Settings 4 can be used if the driver desires more sensitivity. The rain sense wipers will automatically change between an intermittent wipe, slow wipe and a fast wipe depending on the amount of moisture that is sensed on the windshield. Place the wiper switch in the OFF position when not using the system.

The Rain Sensing feature can be turned on and off using the Uconnect Touch™ System, refer to "Uconnect Touch™ Settings" in "Understanding Your Instrument Panel" for further information.

NOTE:

- The Rain Sensing feature will not operate when the wiper speed is in the low or high position.
- The Rain Sensing feature may not function properly when ice or dried salt water is present on the windshield.
- Use of Rain-X® or products containing wax or silicone may reduce rain sensor performance.

The Rain Sensing system has protective features for the wiper blades and arms. It will not operate under the following conditions:

- **Low Temperature Wipe Inhibit** — The Rain Sensing feature will not operate when the ignition is placed in the RUN position, the vehicle is stationary and the outside temperature is below 32°F (0°C), unless the wiper control on the multifunction lever is moved, the vehicle speed becomes greater than 0 mph (0 km/h) or the outside temperature rises above freezing.
- **Neutral Wipe Inhibit** — The Rain Sensing feature will not operate when the ignition is placed in the RUN position, the transmission shift lever is in the NEUTRAL position and the vehicle speed is less than 5 mph (8 km/h), unless the wiper control on the multifunction lever is moved or the shift lever is moved out of the NEUTRAL position.

TILT/TELESCOPING STEERING COLUMN

This feature allows you to tilt the steering column upward or downward. It also allows you to lengthen or shorten the steering column. The tilt/telescoping control handle is located below the steering wheel at the end of the steering column.

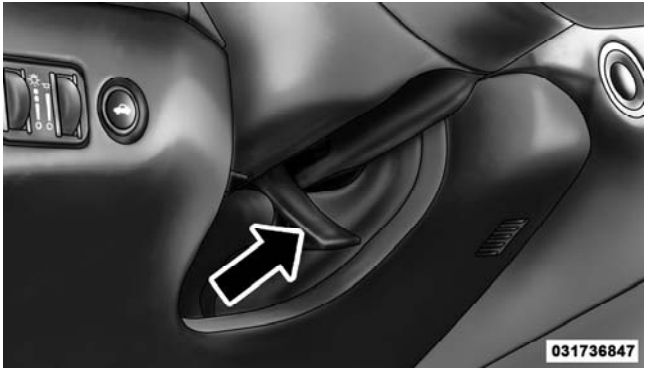

Tilt/Telescoping Control Handle

To unlock the steering column, pull the control handle down. To tilt the steering column, move the steering wheel upward or downward as desired. To lengthen or shorten the steering column, pull the steering wheel outward or push it inward as desired. To lock the steering column in position, push the control handle up until fully engaged.

WARNING!

Do not adjust the steering column while driving. Adjusting the steering column while driving or driving with the steering column unlocked, could cause the driver to lose control of the vehicle. Be sure the steering column is locked before driving your vehicle. Failure to follow this warning may result in serious injury or death.

POWER TILT/TELESCOPING STEERING COLUMN — IF EQUIPPED

This feature allows you to tilt the steering column upward or downward. It also allows you to lengthen or shorten the steering column. The power tilt/telescoping steering column switch is located below the multifunction lever on the steering column.

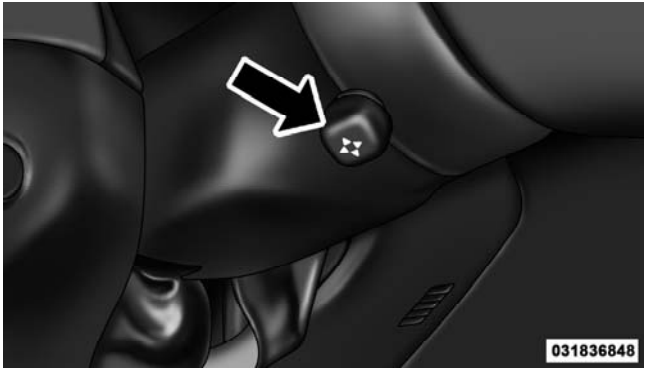

Power Tilt/Telescoping Steering Switch

To tilt the steering column, move the switch up or down as desired. To lengthen or shorten the steering column, pull the switch toward you or push the switch away from you as desired.

NOTE: For vehicles equipped with Driver Memory Seat, you can use your Remote Keyless Entry (RKE) transmitter or the memory switch on the driver's door trim panel to return the tilt/telescopic steering column to pre-programmed positions. Refer to "Driver Memory Seat" in this section.

WARNING!

Do not adjust the steering column while driving. Adjusting the steering column while driving or driving with the steering column unlocked, could cause the driver to lose control of the vehicle. Be sure the steering column is locked before driving your vehicle. Failure to follow this warning may result in serious injury or death.

HEATED STEERING WHEEL — IF EQUIPPED

The steering wheel contains a heating element that helps warm your hands in cold weather. The heated steering wheel has only one temperature setting. Once the heated steering wheel has been turned on it will operate for approximately 58 to 70 minutes before automatically shutting off. The heated steering wheel can shut off early or may not turn on when the steering wheel is already warm.

The heated steering wheel can be turned on and off using the Uconnect Touch™ System.

Touch the "Controls" soft-key then touch the "Heated Steering Wheel" soft-key to turn on the heated steering wheel. Press the "Heated Steering Wheel" soft-key a second time to turn the heated steering wheel off.

Controls Soft-Key

Heated Steering Wheel Soft-Key

NOTE: The engine must be running for the heated steering wheel to operate.

Vehicles Equipped With Remote Start

On models that are equipped with remote start, the heated steering wheel can be programmed to come on during a remote start. Refer to "Remote Starting System — If Equipped" in "Things To Know Before Starting Your Vehicle" for further information.

WARNING!

- **Persons who are unable to feel pain to the skin because of advanced age, chronic illness, diabetes, spinal cord injury, medication, alcohol use, exhaustion, or other physical conditions must exercise care when using the steering wheel heater. It may cause burns even at low temperatures, especially if used for long periods.**

(Continued)

WARNING! (Continued)

- **Do not place anything on the steering wheel that insulates against heat, such as a blanket or steering wheel covers of any type and material.. This may cause the steering wheel heater to overheat.**

ADJUSTABLE PEDALS — IF EQUIPPED

The adjustable pedals system is designed to allow a greater range of driver comfort for steering wheel tilt and seat position. This feature allows the brake, accelerator, and clutch pedals (if equipped) to move toward or away from the driver to provide improved position with the steering wheel.

The switch is located on the front side of the driver's seat cushion side shield.

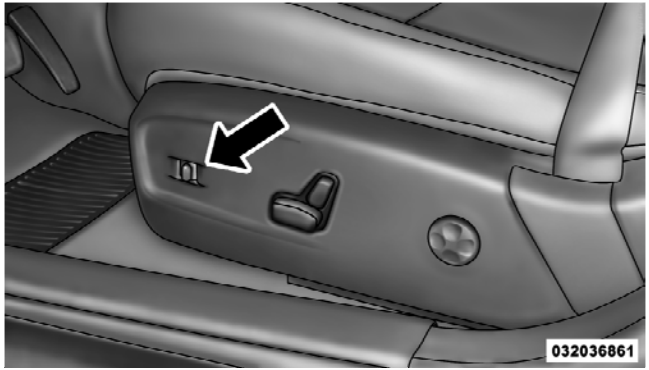

Adjustable Pedals Switch

Press the switch forward to move the pedals forward (toward the front of the vehicle).

Press the switch rearward to move the pedals rearward (toward the driver).

- The pedals can be adjusted with the ignition OFF.
- The pedals **cannot** be adjusted when the vehicle is in REVERSE or when the Electronic Speed Control System is on. The following messages will be displayed on vehicles equipped with the Electronic Vehicle Information System (EVIC) if the pedals are attempted to be adjusted when the system is locked out ("Adjustable Pedal Disabled — Cruise Control Engaged" or "Adjustable Pedal Disabled — Vehicle In Reverse".

NOTE: For vehicles equipped with Driver Memory Seat, you can use your Remote Keyless Entry (RKE) transmitter or the memory switch on the driver's door trim panel to return the adjustable pedals to preprogrammed positions. Refer to "Driver Memory Seat" in "Understanding The Features Of Your Vehicle" for further information.

CAUTION!

Do not place any article under the adjustable pedals or impede its ability to move as it may cause damage to the pedal controls. Pedal travel may become limited if movement is stopped by an obstruction in the adjustable pedal's path.

WARNING!

Do not adjust the pedals while the vehicle is moving. You could lose control and have an accident. Always adjust the pedals while the vehicle is parked.

ELECTRONIC SPEED CONTROL — IF EQUIPPED

When engaged, the Electronic Speed Control takes over accelerator operations at speeds greater than 25 mph (40 km/h).

The Electronic Speed Control buttons are located on the right side of the steering wheel.

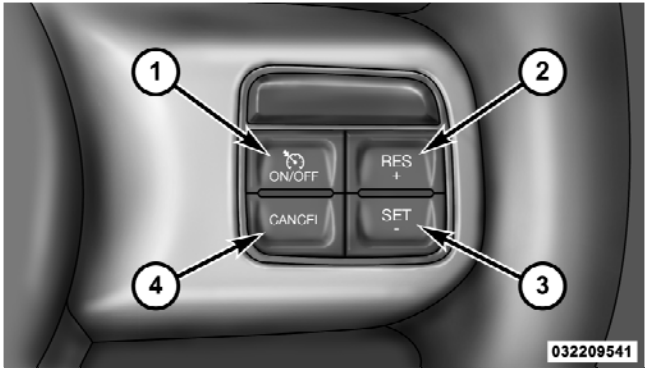

1 — ON/OFF	2 — RES +
4 — CANCEL	3 — SET -

NOTE: In order to ensure proper operation, the Electronic Speed Control System has been designed to shut down if multiple Speed Control functions are operated at

the same time. If this occurs, the Electronic Speed Control System can be reactivated by pushing the Electronic Speed Control ON/OFF button and resetting the desired vehicle set speed.

To Activate

Push the ON/OFF button. The Cruise Indicator Light in the Electronic Vehicle Information Center (EVIC) will illuminate. To turn the system off, push the ON/OFF button a second time. The Cruise Indicator Light will turn off. The system should be turned off when not in use.

WARNING!

Leaving the Electronic Speed Control system on when not in use is dangerous. You could accidentally set the system or cause it to go faster than you want. You could lose control and have an accident. Always leave the system OFF when you are not using it.

To Set A Desired Speed

Turn the Electronic Speed Control ON. When the vehicle has reached the desired speed, press the SET (-) button and release. Release the accelerator and the vehicle will operate at the selected speed.

NOTE: The vehicle should be traveling at a steady speed and on level ground before pressing the SET button.

To Deactivate

A soft tap on the brake pedal, pushing the CANCEL button, or normal brake pressure while slowing the vehicle will deactivate Electronic Speed Control without erasing the set speed memory. Pressing the ON/OFF button or turning the ignition switch OFF erases the set speed memory.

To Resume Speed

To resume a previously set speed, push the RES (+) button and release. Resume can be used at any speed above 20 mph (32 km/h).

To Vary The Speed Setting

When the Electronic Speed Control is set, you can increase speed by pushing the RES (+) button. If the button is continually pressed, the set speed will continue to increase until the button is released, then the new set speed will be established.

Pressing the RES (+) button once will result in a 1 mph (1.6 km/h) increase in set speed. Each subsequent tap of the button results in an increase of 1 mph (1.6 km/h).

To decrease speed while the Electronic Speed Control is set, push the SET (-) button. If the button is continually held in the SET (-) position, the set speed will continue to decrease until the button is released. Release the button when the desired speed is reached, and the new set speed will be established.

Pressing the SET (-) button once will result in a 1 mph (1.6 km/h) decrease in set speed. Each subsequent tap of the button results in a decrease of 1 mph (1.6 km/h).

To Accelerate For Passing

Press the accelerator as you would normally. When the pedal is released, the vehicle will return to the set speed.

Using Electronic Speed Control On Hills

The transmission may downshift on hills to maintain the vehicle set speed.

NOTE: The Electronic Speed Control system maintains speed up and down hills. A slight speed change on moderate hills is normal.

On steep hills, a greater speed loss or gain may occur so it may be preferable to drive without Electronic Speed Control.

WARNING!

Electronic Speed Control can be dangerous where the system cannot maintain a constant speed. Your vehicle could go too fast for the conditions, and you could lose control and have an accident. Do not use Electronic Speed Control in heavy traffic or on roads that are winding, icy, snow-covered or slippery.

ADAPTIVE CRUISE CONTROL (ACC) — IF EQUIPPED

Adaptive Cruise Control (ACC) increases the driving convenience provided by cruise control while traveling on highways and major roadways. However, it is not a safety system and not designed to prevent collisions.

ACC will allow you to keep cruise control engaged in light to moderate traffic conditions without the constant need to reset your cruise control. ACC utilizes a radar sensor designed to detect a vehicle directly ahead of you.

NOTE:

- If the sensor does not detect a vehicle ahead of you, ACC will maintain a fixed set speed.
- If the ACC sensor detects a vehicle ahead, ACC will apply limited braking or acceleration (not to exceed the original set speed) automatically to maintain a preset following distance, while matching the speed of the vehicle ahead.

WARNING!

- **Adaptive Cruise Control (ACC) is a convenience system. It is not a substitute for active driving involvement. It is always the driver's responsibility to be attentive of road, traffic, and weather conditions, vehicle speed, distance to the vehicle ahead; and, most importantly, brake operation to ensure safe operation of the vehicle under all road conditions. Your complete attention is always required while driving to maintain safe control of your vehicle. Failure to follow these warnings can result in a collision and death or serious personal injury.**
- **The ACC system:**

  – Does not react to pedestrians, oncoming vehicles, and stationary objects (e.g., a stopped vehicle in a traffic jam or a disabled vehicle).

(Continued)

WARNING! (Continued)

– Cannot take street, traffic, and weather conditions into account, and may be limited upon adverse sight distance conditions.

– Does not predict the lane curvature or the movement of preceding vehicles and will not compensate for such changes.

– Does not always fully recognize complex driving conditions, which can result in wrong or missing distance warnings.

– Can only apply a maximum of 25% of the vehicle's braking capability, and will not bring the vehicle to a complete stop.

WARNING!

You should switch off the ACC system:

- **When driving in fog, heavy rain, heavy snow, sleet, heavy traffic, and complex driving situations (e.g., in highway construction zones).**
- **When entering a turn lane or highway off ramp; when driving on roads that are winding, icy, snow-covered, slippery, or have steep uphill or downhill slopes.**
- **When towing a trailer up or down steep slopes.**
- **When circumstances do not allow safe driving at a constant speed.**

Failure to follow these warnings can result in a collision and death or serious personal injury.

The Cruise Control system has two control modes:

- Adaptive Cruise Control mode for maintaining an appropriate distance between vehicles.
- Normal (fixed speed) cruise control mode is for cruising at a constant preset speed. For additional information, refer to "Normal (Fixed Speed) Cruise Control Mode" in this section.

NOTE: The system will not react to preceding vehicles. Always be aware of the mode selected.

You can change the mode by using the Cruise Control buttons. The two control modes function differently. Always confirm which mode is selected.

Adaptive Cruise Control (ACC) Operation

The speed control buttons (located on the right side of the steering wheel) operates the ACC system.

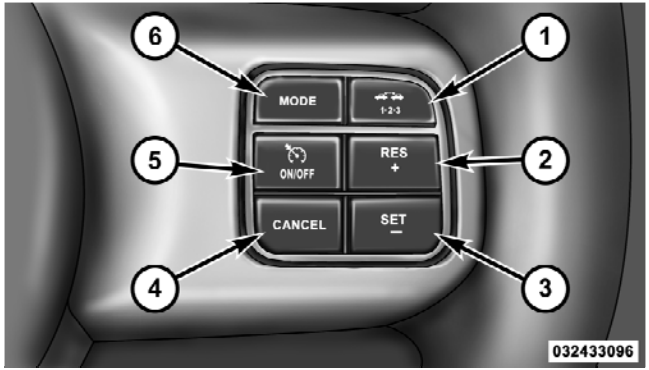

1 — DISTANCE SETTING
2 — RES +
3 — SET -
4 — CANCEL
5 — ON/OFF
6 — MODE

NOTE: Any chassis/suspension modifications to the vehicle will effect the performance of the Adaptive Cruise Control.

Activating Adaptive Cruise Control (ACC)

You can only activate ACC if the vehicle speed is above 20 mph (32 km/h).

When the system is turned on and in the READY state, the Electronic Vehicle Information Center (EVIC) displays “Adaptive Cruise Ready.”

When the system is OFF, the EVIC displays “Adaptive Cruise Control Off.”

NOTE: You cannot enable ACC under the following conditions:

- When you apply the brakes.
- When the parking brake is set.
- When the automatic transmission is in PARK, REVERSE or NEUTRAL.
- When pushing the RES + button without a previously set speed in memory.

To Activate

Push and release the ON/OFF button. The ACC menu in the EVIC displays "Adaptive Cruise Ready."

032363703

Adaptive Cruise Control (ACC) Ready

To turn the system OFF, push and release the ON/OFF button again. At this time, the system will turn off and the EVIC will display "Adaptive Cruise Control Off."

032363702

Adaptive Cruise Control (ACC) OFF

WARNING!

Leaving the Adaptive Cruise Control (ACC) system on when not in use is dangerous. You could accidentally set the system or cause it to go faster than you want. You could lose control and have a collision. Always leave the system off when you are not using it.

To Set A Desired ACC Speed

When the vehicle reaches the speed desired, push the SET - button and release. The EVIC will display the set speed.

032363724

ACC Set

Remove your foot from the accelerator pedal. If you do not, the vehicle may continue to accelerate beyond the set speed. If this occurs:

- The message “DRIVER OVERRIDE” will display in the EVIC.
- The system will not be controlling the distance between your vehicle and the vehicle ahead. The vehicle speed will only be determined by the position of the accelerator pedal.

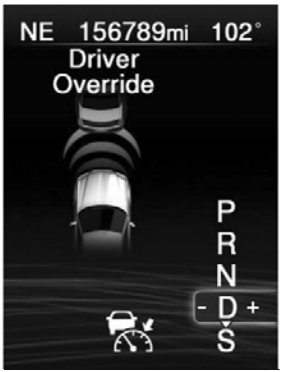

032363713

Driver Override

3

To Cancel

The system will disable ACC without erasing the memory if:

- You softly tap the brake pedal.
- You depress the brake pedal.
- You press the CANCEL switch.
- An Anti-Lock Brake System (ABS) event occurs.
- If the transmission is shifted into NEUTRAL.
- The Electronic Stability Control/Traction Control System (ESC/TCS) activates.

NOTE: If ACC is resumed or set with the ESC/TCS off, ESC will automatically be re-engaged.

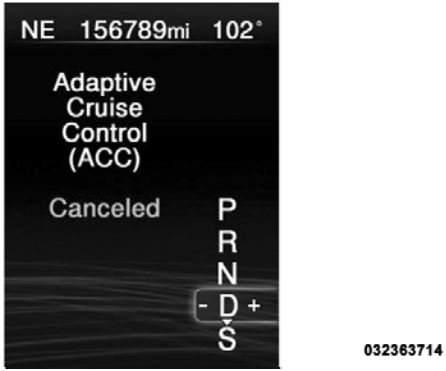

Adaptive Cruise Control (ACC) Cancelled

To Turn Off

The system will turn off and erase the set speed in memory if:

- You push and release the ON/OFF button.
- You turn OFF the ignition.

To Resume Speed

Press the RES + button and release. Then remove your foot from the accelerator pedal. The EVIC will display the last set speed.

NOTE: You can resume ACC from a minimum of 20 mph (32 km/h).

WARNING!

The Resume function should only be used if traffic and road conditions permit. Resuming a set speed that is too high or too low for prevailing traffic and road conditions could cause the vehicle to accelerate or decelerate too sharply for safe operation. Failure to follow these warnings can result in a collision and death or serious personal injury.

To Vary The Speed Setting

While ACC is set, you can increase the set speed by pressing and holding the RES + button. If the button is continually pressed, the set speed will continue to increase in 5 mph (8 km/h) increments until the button is released. The increase in set speed is reflected in the EVIC display.

Pressing the RES + button once will result in a 1 mph (1.6 km/h) increase in set speed. Each subsequent tap of the button results in an increase of 1 mph (1.6 km/h).

While ACC is set, the set speed can be decreased by pressing and holding the SET - button. If the button is continually pressed, the set speed will continue to decrease in 5 mph (8 km/h) increments until the button is released. The decrease in set speed is reflected in the EVIC display.

Pressing the SET - button once will result in a 1 mph (1.6 km/h) decrease in set speed. Each subsequent tap of the button results in a decrease of 1 mph (1.6 km/h).

NOTE:

- When you use the SET - button to decelerate, if the engine's braking power does not slow the vehicle sufficiently to reach the set speed, the brake system will automatically slow the vehicle.
- The ACC system can only apply a maximum of 25% of the vehicle's braking capability and will not bring the vehicle to a complete stop.
- The ACC system maintains set speed when driving up hill and down hill. However, a slight speed change on moderate hills is normal. In addition, downshifting may occur while climbing uphill or descending downhill. This is normal operation and necessary to maintain set speed.

Setting The Following Distance In ACC

The specified following distance for ACC can be set by varying the distance setting between 3 (long), 2 (medium), and 1 (short). Using this distance setting and the vehicle speed, ACC calculates and sets the distance to the vehicle ahead. This distance setting displays in the EVIC.

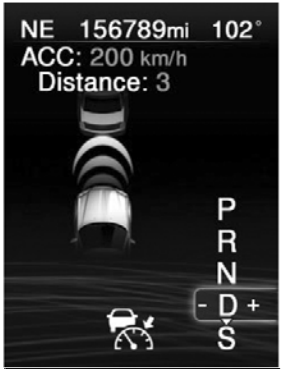

032363707

Distance Set 3 (long)

032363708

Distance Set 2 (medium)

032363709

Distance Set 1 (short)

To change the distance setting, press the Distance button and release. Each time the button is pressed, the distance setting adjusts between 3 (long), 2 (medium), and 1 (short).

If there is no vehicle ahead, the vehicle will maintain the set speed. If a slower moving vehicle is detected in the same lane, the EVIC displays the "Sensed Vehicle Indicator" icon, and the system adjusts vehicle speed automatically to maintain the distance setting, regardless of the set speed.

The vehicle will then maintain the set distance until:

- The vehicle ahead accelerates to a speed above the set speed.
- The vehicle ahead moves out of your lane or view of the sensor.
- The vehicle ahead slows to a speed below 15 mph (24 km/h) and the system automatically disengages itself.
- The distance setting is changed.
- The system disengages. (Refer to the information on ACC Activation).

The maximum braking applied by ACC is limited; however, the driver can always apply the brakes manually, if necessary.

NOTE: The brake lights will illuminate whenever the ACC system applies the brakes.

A Proximity Warning will alert the driver if ACC predicts that its maximum braking level is not sufficient to maintain the set distance. If this occurs, a visual alert "BRAKE" will flash in the EVIC and a chime will sound while ACC continues to apply its maximum braking capacity. When this occurs, you should immediately apply the brakes as needed to maintain a safe distance from the vehicle ahead.

032363710

Brake Alert 3

032363711

Brake Alert 2

032363712

Brake Alert 1

Adaptive Cruise Control (ACC) Menu

The EVIC displays the current ACC system settings. The EVIC is located in the upper part of the instrument cluster between the speedometer and the tachometer. The information it displays depends on ACC system status.

Press and release the UP or DOWN button until "ACC" or "Cruise" is highlighted in the EVIC. Status of the ACC or Cruise is also displayed in the menu line.

Press and release the SELECT (right arrow) button to display the following information:

Adaptive Cruise Control Off

– When ACC is deactivated, the display will read "Adaptive Cruise Control Off."

Adaptive Cruise Control Ready

– When ACC is activated but the vehicle speed setting has not been selected, the display will read "Adaptive Cruise Control Ready."

ACC SET

– When ACC is set, the set speed will display.

The set speed will continue to display in place of the odometer reading when changing the EVIC display while ACC is set.

The ACC screen will display once again if any ACC activity occurs, which may include any of the following:

- Set Speed Change
- Distance Setting Change
- System Cancel
- Driver Override
- System Off
- ACC Proximity Warning
- ACC Unavailable Warning

The EVIC will return to the last display selected after five seconds of no ACC display activity.

Display Warnings And Maintenance

"Clean Radar Sensor In Front Of Vehicle" Warning
The ACC "Clean Radar Sensor In Front Of Vehicle" warning will display when conditions temporarily limit system performance. This most often occurs at times of poor visibility, such as in snow or heavy rain. The ACC system may also become temporarily blinded due to obstructions, such as mud, dirt or ice. In these cases, the EVIC will display "Clean Radar Sensor In Front Of Vehicle" and the system will deactivate.

The "Clean Radar Sensor In Front Of Vehicle" message can sometimes be displayed while driving in highly reflective areas (i.e. tunnels with reflective tiles, or ice and snow). The ACC system will recover after the vehicle has left these areas. Under rare conditions, when the radar is not tracking any vehicles or objects in its path this warning may temporarily occur.

NOTE: If the ACC "Clean Radar Sensor In Front Of Vehicle" warning is active Normal (Fixed Speed) Cruise Control is still available. For additional information refer to "Normal (Fixed Speed) Cruise Control Mode" in this section.

If weather conditions are not a factor, the driver should examine the sensor. It may require cleaning or removal of an obstruction. The sensor is located in the center of the vehicle behind the lower grille.

To keep the ACC System operating properly, it is important to note the following maintenance items:

- Always keep the sensor clean. Carefully wipe the sensor lens with a soft cloth. Be cautious not to damage the sensor lens.
- Do not remove any screws from the sensor. Doing so could cause an ACC system malfunction or failure and require a sensor realignment.
- If the sensor is damaged due to a collision, see your authorized dealer for service.
- Do not attach or install any accessories near the sensor, including transparent material or aftermarket grilles. Doing so could cause an ACC system failure or malfunction.

When the condition that deactivated the system is no longer present, the system will return to the "Adaptive Cruise Control Off" state and will resume function by simply reactivating it.

NOTE: Installing a vehicle front-end protector or an aftermarket grille or modifying the grille is not recommended. Doing so may block the sensor and inhibit ACC operation.

ACC Unavailable Warning

If the system turns off, and the EVIC displays "Adaptive Cruise Control (ACC) Unavailable", there may be a temporary malfunction that limits ACC functionality. Although the vehicle is still drivable under normal conditions, ACC will be temporarily unavailable. If this occurs, try activating ACC again later, following a key cycle. If the problem persists, see your authorized dealer.

Adaptive Cruise Control (ACC) Unavailable Warning

Service ACC Warning

If the system turns off, and the EVIC displays "ACC/FCW Unavailable Service Radar Sensor", it indicates there is an internal system fault. Although the vehicle is still drivable under normal conditions, have the system checked by an authorized dealer.

Precautions While Driving With ACC

In certain driving situations, ACC may have detection issues. In these cases, ACC may brake late or unexpectedly. The driver needs to stay alert and may need to intervene.

Adding A Trailer Hitch

The weight of a trailer/hitch may affect the performance of ACC. If there is a noticeable change in performance following the installation of a trailer/hitch, or if the ACC performance does not return to normal after removing the trailer/hitch see your authorized dealer.

Offset Driving

ACC may not detect a vehicle in the same lane that is offset from your direct line of travel. There will not be sufficient distance to the vehicle ahead. The offset vehicle may move in and out of the line of travel, which can cause your vehicle to brake or accelerate unexpectedly.

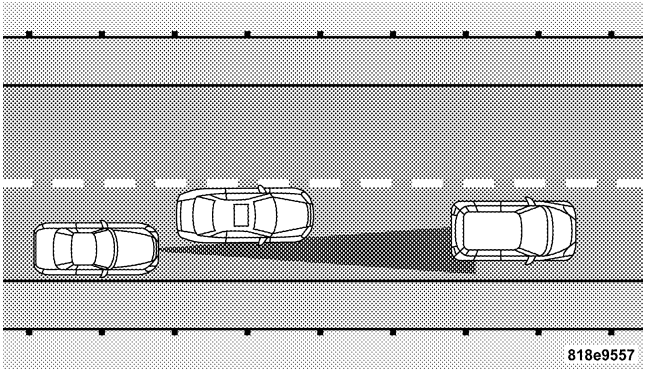

Turns And Bends

In turns or bends, ACC may detect a vehicle ahead too late or too early. This may cause your vehicle to brake late or unexpectedly. Give extra attention in curves and be ready to apply the brakes if necessary. Be sure to select an appropriate speed while driving in curves.

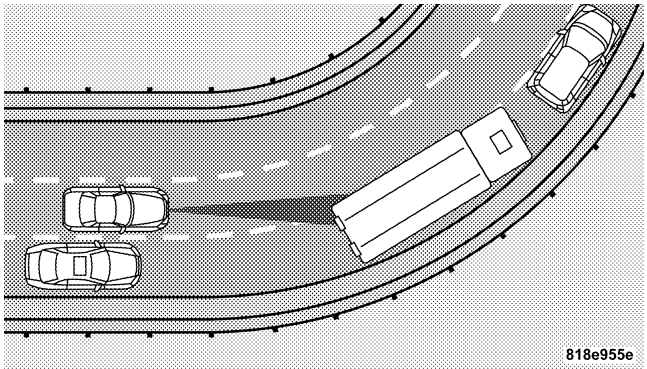

ACC may occasionally provide braking and/or a driver alert that you consider unnecessary. This may be the system's response to signs, guardrails, and other stationary objects in a curve. This may also occur at the base of steep hills. This is normal operation and your vehicle does not require service.

Using ACC On Hills

When driving on hills, ACC may not detect a vehicle in your lane. Depending on the speed, vehicle load, traffic conditions, and the steepness of the hills, ACC performance may be limited.

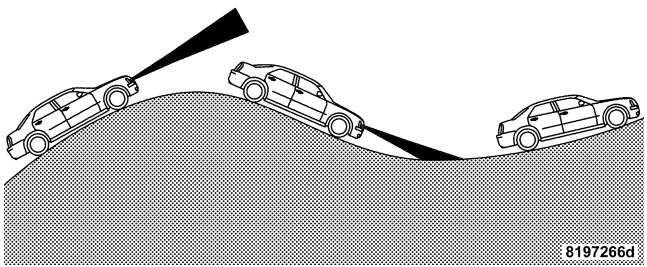

Lane Changing

ACC will not detect a vehicle until it is completely in the lane in which you are traveling. In the illustration shown, ACC has not yet detected the vehicle changing lanes and it may not detect the vehicle until it's too late for the ACC system to take action. ACC will not detect a vehicle until it is completely in the lane. There will not be sufficient distance to the lane-changing vehicle. Always be attentive and ready to apply the brakes if necessary.

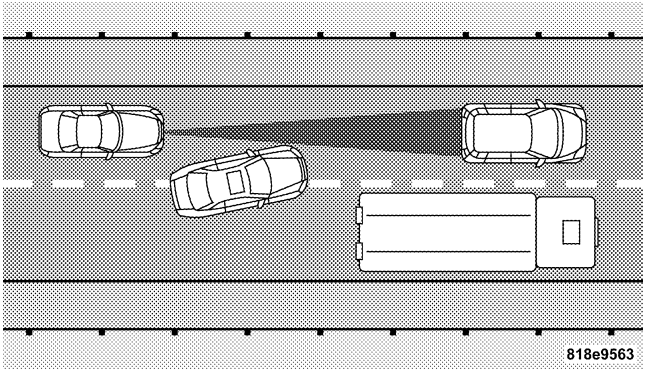

Narrow Vehicles

Some narrow vehicles traveling near the outer edges of the lane or edging into the lane are not detected until they have moved fully into the lane. There will not be sufficient distance to the vehicle ahead.

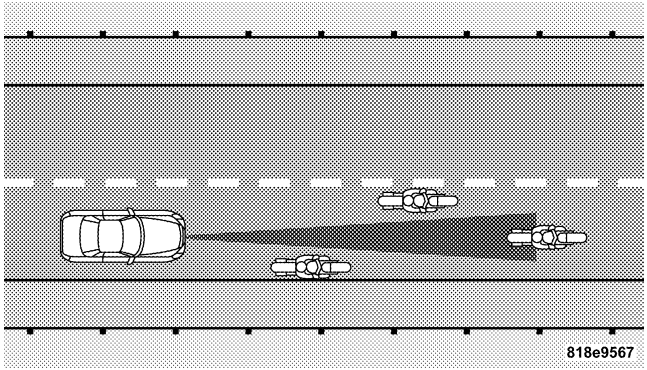

Stationary Objects And Vehicles

ACC does not react to stationary objects and stationary vehicles. For example, ACC will not react in situations where the vehicle you are following exits your lane and the vehicle ahead is stopped in your lane. Always be attentive and ready to apply the brakes if necessary.

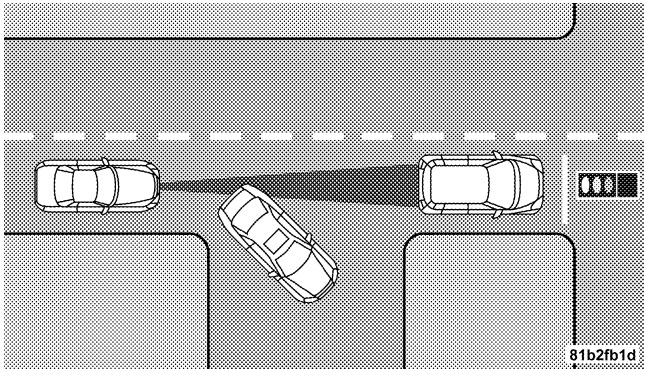

General Information

FCC Requirements For Vehicular Radar Systems
Classification Specifications:
47 C.F.R. Part 15
47 C.F.R Part 15.515

Normal (Fixed Speed) Cruise Control Mode

In addition to Adaptive Cruise Control mode, a normal (fixed speed) Cruise Control mode is available for cruising at fixed speeds. The normal Cruise Control mode is designed to maintain a set cruising speed without requiring the driver to operate the accelerator. Cruise Control can only be operated if the vehicle speed is above 20 mph (32 km/h).

To change modes, press the MODE button when the system is in either the OFF, READY, or SET position. "Cruise Ready" will be displayed if the system was in ACC READY or ACC SET position. "Cruise Off" will be displayed if the system was in the ACC OFF position. To switch back to Adaptive Cruise Control mode, press the MODE button a second time.

WARNING!

In the normal Cruise Control mode, the system will not react to vehicles ahead. In addition, the proximity warning does not activate and no alarm will sound even if you are too close to the vehicle ahead since neither the presence of the vehicle ahead nor the vehicle-to vehicle distance is detected. Be sure to maintain a safe distance between your vehicle and the vehicle ahead. Always be aware which mode is selected.

To Set A Desired Speed

When the vehicle reaches the speed desired, press the SET **-** button and release. The EVIC will display the set speed.

NOTE: You must observe the display when setting or changing speed, not the speedometer.

To Vary The Speed Setting
There are two ways to change the set speed:

- Use the accelerator pedal to adjust the vehicle to the desired speed and press the SET - button.
- Tap the RES + or SET - button to increase or decrease the set speed in 1 mph (1.6 km/h) increments respectively. Hold the RES + or SET - button for 5 mph (8 km/h) increments.

To Cancel
The system will disable normal Cruise Control without erasing the memory if:

- You softly tap or depress the brake pedal.
- You press the CANCEL button.
- The Electronic Stability Control/Traction Control System (ESC/TCS) activates.

To Resume
Press the RES + button and then remove your foot from the accelerator pedal. The EVIC will display the last set speed.

To Turn Off
The system will turn off and erase the set speed in memory if:

- You push and release the ON/OFF button.
- You turn off the ignition.
- You switch off ESC.

If the Cruise Control system is turned off and reactivated, the system will return to the last driver setting (ACC or Normal Cruise Control).

Forward Collision Warning — If Equipped

Forward Collision Warning (FCW) warns the driver of a potential collision with the vehicle in front of you and prompts the driver to take action in order to avoid the collision.

FCW monitors the information from the forward looking sensor as well as the Electronic Brake Controller (EBC), wheel speed sensors, i.e., to calculate a probable rear-end collision. When the system determines that a rear-end collision is probable a warning message (both audible and visual) will be displayed on the EVIC. When the system determines a collision with the vehicle in front of you is no longer probable, the warning message will be deactivated.

NOTE: The minimum speed for FCW activation is 10 mph (16 km/h).

WARNING!

Forward Collision Warning (FCW) is not intended to avoid a collision on its own. The driver has the responsibility to avoid a collision by controlling the vehicle via braking and steering. Failure to follow this warning could lead to serious injury or death.

Changing FCW Status

The FCW feature can be set to far, set to near or turned off using the Uconnect Touch™ System, refer to "Uconnect Touch™ Settings" in "Understanding Your Instrument Panel" for further information. The FCW Status Off, Near or Far will be displayed in the Uconnect Touch™ display.

The default status of FCW is the “Far” setting, this allows the system to warn you of a possible collision with the vehicle in front of you when you are farther away. This gives you the most reaction time.

Changing the FCW status to the “Near” setting, allows the system to warn you of a possible collision with the vehicle in front of you when you are much closer. This setting provides less reaction time than the “Far” setting, which allows for a more dynamic driving experience.

Changing the FCW status to “Off” prevents the system from warning you of a possible collision with the vehicle in front of you.

NOTE:

- In the “Off” setting FCW OFF will be displayed on the Uconnect Touch™ display.
- The system will retain the last setting selected by the driver after ignition shut down.
- FCW will not react to irrelevant objects such as overhead objects, ground reflections, objects not in the path of the car, stationary objects that are far away, oncoming traffic, or leading vehicles with the same or higher rate of speed.
- FCW will be disabled like ACC below with the unavailable screens.

FCW Unavailable Warning

If the system turns off, and the EVIC displays "ACC/FCW Unavailable, Vehicle System Error", there may be a temporary malfunction that limits FCW functionality. Although the vehicle is still drivable under normal conditions, FCW will be temporarily unavailable. If this occurs, try activating FCW again later, following a key cycle. If the problem persists, see your authorized dealer.

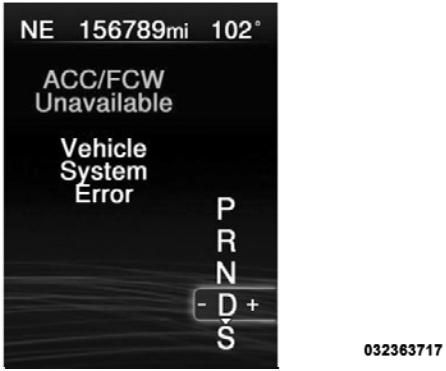

ACC/FCW Unavailable, Vehicle System Error Warning

Service FCW Warning

If the system turns off, and the EVIC displays "ACC/FCW Unavailable Service Radar Sensor", it indicates there is an internal system fault. Although the vehicle is still drivable under normal conditions, have the system checked by an authorized dealer.

PARKSENSE® PARK ASSIST — IF EQUIPPED

The ParkSense® Park Assist system provides visual and audible indications of the distance between the rear and/or front fascia and a detected obstacle when backing up or moving forward, e.g. during a parking maneuver. Refer to ParkSense® System Usage Precautions for limitations of this system and recommendations.

ParkSense® will retain the last system state (enabled or disabled) from the last ignition cycle when the ignition is changed to the ON/RUN position.

ParkSense® can be active only when the shift lever is in REVERSE or DRIVE. If ParkSense® is enabled at one of these shift lever positions, the system will remain active until the vehicle speed is increased to approximately 7 mph (11 km/h) or above. The system will become active again if the vehicle speed is decreased to speeds less than approximately 6 mph (9 km/h).

ParkSense® Sensors

The four ParkSense® sensors, located in the rear fascia/bumper, monitor the area behind the vehicle that is within the sensors' field of view. The sensors can detect obstacles from approximately 12 in (30 cm) up to 79 in (200 cm) from the rear fascia/bumper in the horizontal direction, depending on the location, type and orientation of the obstacle.

The six ParkSense® sensors, located in the front fascia/bumper, monitor the area in front of the vehicle that is within the sensors' field of view. The sensors can detect obstacles from approximately 12 in (30 cm) up to 47 in (120 cm) from the front fascia/bumper in the horizontal direction, depending on the location, type and orientation of the obstacle.

ParkSense® Warning Display

The ParkSense® Warning screen will only be displayed if Sound and Display is selected from the Uconnect Touch™ System. Refer to "Uconnect Touch™ Settings" in "Understanding Your Instrument Panel" for further information.

The ParkSense® Warning screen is located within the Electronic Vehicle Information Center (EVIC). It provides visual warnings to indicate the distance between the rear fascia/bumper and/or front fascia/bumper and the detected obstacle.

032741298

Park Assist Display

ParkSense® Display

The warning display will turn ON indicating the system status when the vehicle is in REVERSE or when the vehicle is in DRIVE and an obstacle has been detected.

032763177

Park Assist System ON

032741296

Park Assist System Off

The system will indicate a detected obstacle by showing three solid arcs and will produce a one-half second tone. As the vehicle moves closer to the object the EVIC display will show fewer arcs and the sound tone will change from slow, to fast, to continuous.

0327412599

Slow Tone

032741298

Fast Tone

032741297

Continuous Tone

The vehicle is close to the obstacle when the EVIC display shows one flashing arc and sounds a continuous tone. The following chart shows the warning alert operation when the system is detecting an obstacle:

WARNING ALERTS					
Rear Distance (in/cm)	Greater than 59 in (150 cm)	59-39 in (150-100 cm)	39-25 in (100-65 cm)	25-12 in (65-30 cm)	Less than 12 in (30 cm)
Front Distance (in/cm)	Greater than 47 in (120 cm)	47-39 in (120-100 cm)	39-25 in (100-65 cm)	25-12 in (65-30 cm)	Less than 12 in (30 cm)
Audible Alert (Chime)	None	Single 1/2 second tone (for rear only)	Slow (for rear only)	Fast	Continuous
Arc	None	3 Solid (Continuous)	3 Slow Flashing	2 Slow Flashing	1 Slow Flashing

Front Park Assist Audible Alerts

ParkSense® will turn off the Front Park Assist audible alert (chime) after approximately 3 seconds when an obstacle has been detected, the vehicle is stationary, and brake pedal is applied.

Enabling And Disabling ParkSense®

ParkSense® can be enabled and disabled using the Uconnect Touch™ System. The available choices are: Off, Sound Only, or Sound and Display. Refer to "Uconnect Touch™ Settings" in "Understanding Your Instrument Panel" for further information.

When the ParkSense® soft-key is pressed to disable the system, the EVIC will display the "PARK ASSIST SYSTEM OFF" message for approximately five seconds. Refer to "Electronic Vehicle Information Center (EVIC)" in "Understanding Your Instrument Panel" for further information. When the shift lever is moved to REVERSE or to DRIVE (at or below 7 mph [11 km/h]) and the system is disabled, the EVIC will display the "PARK ASSIST SYSTEM OFF" message for approximately five seconds in REVERSE or for 5 seconds when the vehicle is in DRIVE.

Service The ParkSense® Park Assist System

When the ParkSense® Park Assist System is malfunctioning, the instrument cluster will actuate a single chime, once per ignition cycle. The instrument cluster will display the "CLEAN PARK ASSIST" message when any of the rear or front sensor(s) are blocked by snow, mud, or ice and the vehicle is shifted into REVERSE or DRIVE. The instrument cluster will display the "SERVICE PARK ASSIST" message when any of the rear or front sensors are damaged and require service. When the shift lever is moved to REVERSE or DRIVE and the system has detected a faulted condition, the EVIC will display the "CLEAN PARK ASSIST", "SERVICE PARK ASSIST" or the "SERVICE PARK ASSIST SYSTEM" message for as long as the vehicle is in REVERSE or DRIVE (at speeds

less than 7 mph [11 km/h]). Under this condition ParkSense® will not operate. Refer to "Electronic Vehicle Information Center (EVIC)" in "Understanding Your Instrument Panel" for further information.

If "CLEAN PARK ASSIST" appears in the Electronic Vehicle Information Center (EVIC) make sure the outer surface and the underside of the rear fascia/bumper and/or front fascia/bumper is clean and clear of snow, ice, mud, dirt or other obstruction and then cycle the ignition. If the message continues to appear see an authorized dealer.

If "SERVICE PARK ASSIST" or "SERVICE PARK ASSIST SYSTEM" appears in the EVIC, see an authorized dealer.

Cleaning The ParkSense® System

Clean the ParkSense® sensors with water, car wash soap and a soft cloth. Do not use rough or hard cloths. Do not scratch or poke the sensors. Otherwise, you could damage the sensors.

ParkSense® System Usage Precautions

NOTE:

- Ensure that the front and rear bumper are free of snow, ice, mud, dirt and debris to keep the ParkSense® system operating properly.
- Jackhammers, large trucks, and other vibrations could affect the performance of ParkSense®.
- When you turn ParkSense® off, the EVIC will display "PARK ASSIST SYSTEM OFF." Furthermore, once you turn ParkSense® off, it remains off until you turn it on again, even if you cycle the ignition key.
- When you move the shift lever to the REVERSE or DRIVE position and ParkSense® is turned off, the EVIC will display "PARK ASSIST SYSTEM OFF" message for approximately five seconds in REVERSE or for 5 seconds when the vehicle is in DRIVE.

- Clean the ParkSense® sensors regularly, taking care not to scratch or damage them. The sensors must not be covered with ice, snow, slush, mud, dirt or debris. Failure to do so can result in the system not working properly. The ParkSense® system might not detect an obstacle behind or in front of the fascia/bumper, or it could provide a false indication that an obstacle is behind or in front of the fascia/bumper.
- Objects such as bicycle carriers, trailer hitches, etc., must not be placed within 12 in (30 cm) from the rear fascia/bumper while driving the vehicle. Failure to do so can result in the system misinterpreting a close object as a sensor problem, causing the "SERVICE PARK ASSIST" message to be displayed in the EVIC.

CAUTION!

- **ParkSense® is only a parking aid and it is unable to recognize every obstacle, including small obstacles. Parking curbs might be temporarily detected or not detected at all. Obstacles located above or below the sensors will not be detected when they are in close proximity.**
- **The vehicle must be driven slowly when using ParkSense® in order to be able to stop in time when an obstacle is detected. When backing up, it is recommended that the driver looks over his/her shoulder when using ParkSense®.**

WARNING!

- **Drivers must be careful when backing up even when using the ParkSense® Park Assist System. Always check carefully behind your vehicle, look behind you, and be sure to check for pedestrians, animals, other vehicles, obstructions, and blind spots before backing up. You are responsible for safety and must continue to pay attention to your surroundings. Failure to do so can result in serious injury or death.**

(Continued)

WARNING! (Continued)

- **Before using the ParkSense® Park Assist System, it is strongly recommended that the ball mount and hitch ball assembly is disconnected from the vehicle when the vehicle is not used for towing. Failure to do so can result in injury or damage to vehicles or obstacles because the hitch ball will be much closer to the obstacle than the rear fascia when the warning display turns on the single flashing arc and sounds the continuous tone. Also, the sensors could detect the ball mount and hitch ball assembly, depending on its size and shape, giving a false indication that an obstacle is behind the vehicle.**

PARKVIEW® REAR BACK UP CAMERA — IF EQUIPPED

Your vehicle may be equipped with the ParkView® Rear Back Up Camera that allows you to see an on-screen image of the rear surroundings of your vehicle whenever the shift lever is put into REVERSE. The image will be displayed on the radio touchscreen display along with a caution note to “check entire surroundings” across the top of the screen. After five seconds this note will disappear. The ParkView® camera is located on the rear of the vehicle above the rear License plate.

When the vehicle is shifted out of REVERSE, the rear camera mode is exited and the navigation or audio screen appears again.

When displayed, static grid lines will illustrate the width of the vehicle while a dashed center-line will indicate the center of the vehicle to assist with parking or aligning to a hitch/receiver. The static grid lines will show separate zones that will help indicate the distance to the rear of the vehicle. The following table shows the approximate distances for each zone:

Zone	Distance to the rear of the vehicle
Red	0 - 1 ft (0 - 30 cm)
Yellow	1 ft - 3 ft (30 cm - 1 m)
Green	3 ft or greater (1 m or greater)

WARNING!

Drivers must be careful when backing up even when using the ParkView® Rear Back Up Camera. Always check carefully behind your vehicle, and be sure to check for pedestrians, animals, other vehicles, obstructions, or blind spots before backing up. You are responsible for the safety of your surroundings and must continue to pay attention while backing up. Failure to do so can result in serious injury or death.

CAUTION!

- **To avoid vehicle damage, ParkView® should only be used as a parking aid. The ParkView® camera is unable to view every obstacle or object in your drive path.**

(Continued)

CAUTION! (Continued)

- **To avoid vehicle damage, the vehicle must be driven slowly when using ParkView® to be able to stop in time when an obstacle is seen. It is recommended that the driver look frequently over his/her shoulder when using ParkView®.**

NOTE: If snow, ice, mud, or any foreign substance builds up on the camera lens, clean the lens, rinse with water, and dry with a soft cloth. Do not cover the lens.

Turning ParkView® On Or Off — With Touch Screen Radio

1. Turn the Radio on.
2. Press the “More” soft-key.
3. Press the “Settings” soft-key.
4. Press the “Safety & Driving Assistance” soft-key.
5. Press the check box soft key next to “Parkview® Backup Camera” to enable/disable.

OVERHEAD CONSOLE

The overhead console contains courtesy/reading lights and storage for sunglasses. Universal Garage Door Opener (HomeLink®) and power sunroof switches may also be included, if equipped.

033333450

Overhead Console

Front Map/Reading Lights

Lights are mounted in the overhead console. Each light can be turned on by pressing the switch on either side of the console. These buttons are backlit for night time visibility.

031433150

Front Map/Reading Lights

To turn the lights off, press the switch a second time. The lights also turn on when a door is opened. The lights will also turn on when the UNLOCK button on the RKE is pressed.

Sunglass Bin Door

At the front of the console a compartment is provided for the storage of a pair of sunglasses. The storage compartment access is a “push/push” design. Push the chrome pad on the door to open. Push the chrome pad on the door to close.

Sunglass Bin Door

GARAGE DOOR OPENER — IF EQUIPPED

HomeLink® replaces up to three hand-held transmitters that operate devices such as garage door openers, motorized gates, lighting or home security systems. The HomeLink® unit is powered by your vehicles 12 Volt battery.

The HomeLink® buttons, located on either the overhead console, headliner or sunvisor, designate the three different HomeLink® channels. The HomeLink® indicator is located above the center button.

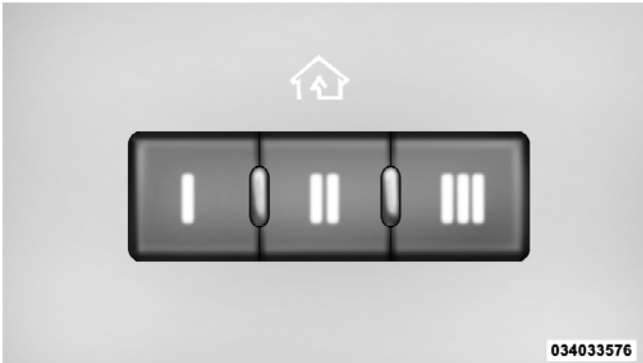

HomeLink® Buttons/Overhead Consoles

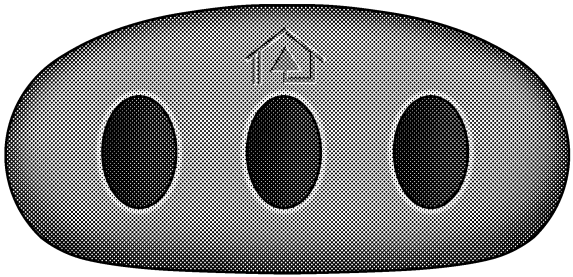

HomeLink® Buttons/Sunvisor/Headliner

NOTE: HomeLink® is disabled when the Vehicle Security Alarm is active.

Before You Begin Programming HomeLink®

Be sure that your vehicle is parked outside of the garage before you begin programming.

For more efficient programming and accurate transmission of the radio-frequency signal it is recommended that a new battery be placed in the hand-held transmitter of the device that is being programmed to the HomeLink® system.

Erase all channels before you begin programming. To erase the channels place the ignition in the ON/RUN position and press and hold the two outside HomeLink® buttons (I and III) for up 20 seconds or until the red indicator flashes.

NOTE:

- Erasing all channels should only be performed when programming HomeLink® for the first time. Do not erase channels when programming additional buttons.
- If you have any problems, or require assistance, please call toll-free 1–800–355–3515 or, on the Internet at www.HomeLink.com for information or assistance.

Programming A Rolling Code

For programming garage door openers that were manufactured after 1995. These garage door openers can be identified by the “LEARN” or “TRAIN” button located where the hanging antenna is attached to the garage door opener. It is NOT the button that is normally used to open and close the door. The name and color of the button may vary by manufacturer.

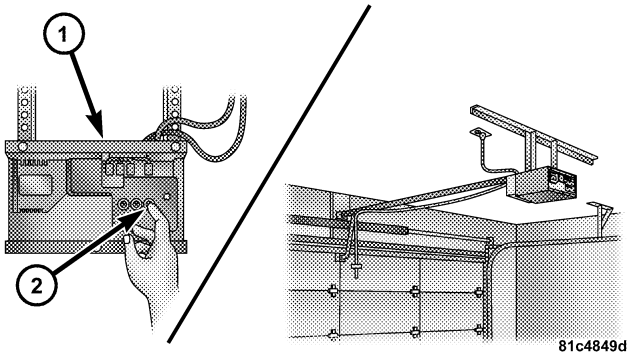

Training The Garage Door Opener

1 — Door Opener
2 — Training Button

1. Turn the ignition switch to the ON/RUN position.

2. Place the hand-held transmitter 1 to 3 in (3 to 8 cm) away from the HomeLink® button you wish to program while keeping the HomeLink® indicator light in view.

3. Simultaneously press and hold both the Homelink® button you want to program and the hand-held transmitter button.

4. Continue to hold both buttons and observe the indicator light. The Homelink® indicator will flash slowly and then rapidly after Homelink® has received the frequency signal from the hand-held transmitter. Release both buttons after the indicator light changes from slow to rapid.

5. At the garage door opener motor (in the garage), locate the “LEARN” or “TRAINING” button. This can usually be found where the hanging antenna wire is attached to the garage door opener/device motor. Firmly press and release the “LEARN” or “TRAINING” button. On some garage door openers/devices there may be a light that blinks when the garage door opener/device is in the LEARN/TRAIN mode.

NOTE: You have 30 seconds in which to initiate the next step after the LEARN button has been pressed.

6. Return to the vehicle and press the programmed HomeLink® button twice (holding the button for two seconds each time). If the garage door opener/device activates, programming is complete.

NOTE: If the garage door opener/device does not activate, press the button a third time (for two seconds) to complete the training.

To program the remaining two HomeLink® buttons, repeat each step for each remaining button. DO NOT erase the channels.

Reprogramming A Single HomeLink® Button

To reprogram a channel that has been previously trained, follow these steps:

1. Turn the ignition switch to the ON/RUN position.

2. Press and hold the desired HomeLink® button until the indicator light begins to flash after 20 seconds. **Do not release the button.**

3. **Without releasing the button** proceed with "Programming A Rolling Code" Step 2 and follow all remaining steps.

Programming A Non-Rolling Code

For programming Garage Door Openers manufactured before 1995.

1. Turn the ignition switch to the ON/RUN position.

2. Place the hand-held transmitter 1 to 3 in (3 to 8 cm) away from the HomeLink® button you wish to program while keeping the HomeLink® indicator light in view.

3. Simultaneously press and hold both the Homelink® button you want to program and the hand-held transmitter button.

4. Continue to hold both buttons and observe the indicator light. The Homelink® indicator will flash slowly and then rapidly after Homelink® has received the frequency signal from the hand-held transmitter. Release both buttons after the indicator light changes from slow to rapid.

5. Press and hold the programmed HomeLink® button and observe the indicator light.

- If the indicator light stays on constantly, programming is complete and the garage door/device should activate when the HomeLink® button is pressed.
- To program the two remaining HomeLink® buttons, repeat each step for each remaining button. DO NOT erase the channels.

Reprogramming A Single HomeLink® Button

To reprogram a channel that has been previously trained, follow these steps:

1. Turn the ignition switch to the ON/RUN position.

2. Press and hold the desired HomeLink® button until the indicator light begins to flash after 20 seconds. **Do not release the button.**

3. **Without releasing the button** proceed with "Programming A Non-Rolling Code" Step 2 and follow all remaining steps.

Canadian/Gate Operator Programming

For programming transmitters in Canada/United States that require the transmitter signals to "time-out" after several seconds of transmission.

Canadian radio frequency laws require transmitter signals to time-out (or quit) after several seconds of transmission – which may not be long enough for HomeLink® to pick up the signal during programming. Similar to this Canadian law, some U.S. gate operators are designed to time-out in the same manner.

It may be helpful to unplug the device during the cycling process to prevent possible overheating of the garage door or gate motor.

1. Turn the ignition switch to the ON/RUN position.

2. Place the hand-held transmitter 1 to 3 in (3 to 8 cm) away from the HomeLink® button you wish to program while keeping the HomeLink® indicator light in view.

3. Continue to press and hold the HomeLink® button, while you press and release ("cycle"), your hand-held transmitter every two seconds until HomeLink® has successfully accepted the frequency signal. The indicator light will flash slowly and then rapidly when fully trained.

4. Watch for the HomeLink® indicator to change flash rates. When it changes, it is programmed. It may take up to 30 seconds or longer in rare cases. The garage door may open and close while you are programming.

5. Press and hold the programmed HomeLink® button and observe the indicator light.

- If the indicator light stays on constantly, programming is complete and the garage door/device should activate when the HomeLink® button is pressed.
- To program the two remaining HomeLink® buttons, repeat each step for each remaining button. DO NOT erase the channels.

If you unplugged the garage door opener/device for programming, plug it back in at this time.

Reprogramming A Single HomeLink® Button

To reprogram a channel that has been previously trained, follow these steps:

1. Turn the ignition switch to the ON/RUN position.

2. Press and hold the desired HomeLink® button until the indicator light begins to flash after 20 seconds. **Do not release the button.**

3. **Without releasing the button** proceed with "Canadian/Gate Operator Programming" Step 2 and follow all remaining steps.

Using HomeLink®

To operate, press and release the programmed HomeLink® button. Activation will now occur for the programmed device (i.e., garage door opener, gate operator, security system, entry door lock, home/office lighting, etc.,). The hand-held transmitter of the device may also be used at any time.

Security

It is advised to erase all channels before you sell or turn in your vehicle.

To do this, press and hold the two outside buttons for 20 seconds until the red indicator flashes. Note that all channels will be erased. Individual channels cannot be erased.

The HomeLink® Universal Transceiver is disabled when the Vehicle Security Alarm is active.

Troubleshooting Tips

If you are having trouble programming HomeLink®, here are some of the most common solutions:

- Replace the battery in the original hand-held transmitter.
- Press the LEARN button on the Garage Door Opener to complete the training for a Rolling Code.
- Did you unplug the device for programming and remember to plug it back in?

If you have any problems, or require assistance, please call toll-free 1–800–355–3515 or, on the Internet at www.HomeLink.com for information or assistance.

WARNING!

- **Your motorized door or gate will open and close while you are programming the universal transceiver. Do not program the transceiver if people, pets or other objects are in the path of the door or gate. Only use this transceiver with a garage door opener that has a "stop and reverse" feature as required by Federal safety standards. This includes most garage door opener models manufactured after 1982. Do not use a garage door opener without these safety features. Call toll-free 1–800–355–3515 or, on the Internet at www.HomeLink.com for safety information or assistance.**
- **Vehicle exhaust contains carbon monoxide, a dangerous gas. Do not run your vehicle in the garage while programming the transceiver. Exhaust gas can cause serious injury or death.**

General Information

This device complies with FCC rules Part 15 and Industry Canada RSS-210. Operation is subject to the following two conditions:

1. This device may not cause harmful interference.

2. This device must accept any interference that may be received including interference that may cause undesired operation.

NOTE:

- The transmitter has been tested and it complies with FCC and IC rules. Changes or modifications not expressly approved by the party responsible for compliance could void the user's authority to operate the device.
- The term IC before the certification/registration number only signifies that Industry Canada technical specifications were met.

POWER SUNROOF — IF EQUIPPED

The power sunroof switch is located between the sun visors on the overhead console.

034134074

Power Sunroof Switch

WARNING!

- **Never leave children in a vehicle with the key in the ignition switch. Occupants, particularly unattended children, can become entrapped by the power sunroof while operating the power sunroof switch. Such entrapment may result in serious injury or death.**
- **In a collision, there is a greater risk of being thrown from a vehicle with an open sunroof. You could also be seriously injured or killed. Always fasten your seat belt properly and make sure all passengers are properly secured too.**
- **Do not allow small children to operate the sunroof. Never allow your fingers, other body parts, or any object to project through the sunroof opening. Injury may result.**

Opening Sunroof — Express

Press the switch rearward and release it within one-half second and the sunroof will open automatically from any position. The sunroof will open fully and stop automatically. This is called "Express Open". During Express Open operation, any movement of the sunroof switch will stop the sunroof.

Opening Sunroof — Manual Mode

To open the sunroof, press and hold the switch rearward to full open. Any release of the switch will stop the movement and the sunroof will remain in a partially opened condition until the switch is pushed and held rearward again.

Closing Sunroof — Express

Press the switch forward and release it within one-half second and the sunroof will close automatically from any position. The sunroof will close fully and stop automatically. This is called "Express Close". During Express Close operation, any movement of the switch will stop the sunroof.

Closing Sunroof — Manual Mode

To close the sunroof, press and hold the switch in the forward position. Any release of the switch will stop the movement and the sunroof will remain in a partially closed condition until the switch is pushed and held forward again.

Pinch Protect Feature

This feature will detect an obstruction in the opening of the sunroof during Express Close operation. If an obstruction is detected, the sunroof will automatically retract. Remove the obstruction if this occurs. Next, press the switch forward and release to Express Close.

NOTE: If three consecutive sunroof close attempts result in Pinch Protect reversals, the fourth close attempt will be a Manual Close movement with Pinch Protect disabled.

Venting Sunroof — Express

Press and release the "Vent" button, and the sunroof will open to the vent position. This is called "Express Vent", and will occur regardless of sunroof position. During Express Vent operation, any movement of the switch will stop the sunroof.

Sunshade Operation

The sunshade can be opened manually. However, the sunshade will open automatically as the sunroof opens.

NOTE: The sunshade cannot be closed if the sunroof is open.

Wind Buffeting

Wind buffeting can be described as the perception of pressure on the ears or a helicopter-type sound in the ears. Your vehicle may exhibit wind buffeting with the windows down, or the sunroof (if equipped) is in certain open or partially open positions. This is a normal occurrence and can be minimized. If the buffeting occurs with the rear windows open, open the front and rear windows together to minimize the buffeting. If the buffeting occurs with the sunroof open, adjust the sunroof opening to minimize the buffeting or open any window.

Sunroof Maintenance

Use only a nonabrasive cleaner and a soft cloth to clean the glass panel.

Ignition OFF Operation

For vehicles not equipped with the Electronic Vehicle Information Center (EVIC), the power sunroof switch will remain active for 45 seconds after the ignition switch is turned to the LOCK position. Opening either front door will cancel this feature.

NOTE:

- For vehicles equipped with the EVIC, the power sunroof switch will remain active for up to approximately ten minutes after the ignition switch is turned to the LOCK position. Opening either front door will cancel this feature.
- The Ignition Off time is programmable using the Uconnect Touch™ System. Refer to “Uconnect Touch™ Settings” in “Understanding Your Instrument Panel” for further information.

COMMANDVIEW® SUNROOF WITH POWER SHADE — IF EQUIPPED

The CommandView® sunroof switch is located to the left between the sun visors on the overhead console.

The power shade switch is located to the right between the sun visors on the overhead console.

CommandView® Sunroof and Power Shade Switches

WARNING!

- **Never leave children in a vehicle with the key in the ignition switch. Occupants, particularly unattended children, can become entrapped by the power sunroof while operating the power sunroof switch. Such entrapment may result in serious injury or death.**
- **In a collision, there is a greater risk of being thrown from a vehicle with an open sunroof. You could also be seriously injured or killed. Always fasten your seat belt properly and make sure all passengers are properly secured too.**
- **Do not allow small children to operate the sunroof. Never allow your fingers, other body parts, or any object to project through the sunroof opening. Injury may result.**

Opening Sunroof — Express

Press the switch rearward and release it within one-half second and the sunroof will open automatically from any position. The sunroof will open fully and stop automatically. This is called "Express Open". During Express Open operation, any movement of the sunroof switch will stop the sunroof.

Opening Sunroof — Manual Mode

To open the sunroof, press and hold the switch rearward to full open. Any release of the switch will stop the movement and the sunroof will remain in a partially opened condition until the switch is pushed and held rearward again.

Closing Sunroof — Express

Press the switch forward and release it within one-half second and the sunroof will close automatically from any position. The sunroof will close fully and stop automatically. This is called "Express Close". During Express Close operation, any movement of the switch will stop the sunroof.

Closing Sunroof — Manual Mode

To close the sunroof, press and hold the switch in the forward position. Any release of the switch will stop the movement and the sunroof will remain in a partially closed condition until the switch is pushed and held forward again.

Opening Power Shade — Express

Press the shade switch rearward and release it within one-half second and the shade will open automatically from any position. The shade will open fully and stop automatically. This is called "Express Open". During Express Open operation, any movement of the shade switch will stop the shade.

Opening Power Shade — Manual Mode

To open the shade, press and hold the switch rearward to full open. Any release of the switch will stop the movement and the shade will remain in a partially opened condition until the switch is pushed and held rearward again.

Closing Power Shade — Express

Press the switch forward and release it within one-half second and the shade will close automatically from any position. The shade will close fully and stop automatically. This is called "Express Close". During Express Close operation, any movement of the switch will stop the shade.

Closing Power Shade — Manual Mode

To close the shade, press and hold the switch in the forward position. Any release of the switch will stop the movement and the shade will remain in a partially closed condition until the switch is pushed and held forward again.

Pinch Protect Feature

This feature will detect an obstruction in the opening of the sunroof during Express Close operation. If an obstruction is detected, the sunroof will automatically retract. Remove the obstruction if this occurs. Next, press the switch forward and release to Express Close.

NOTE: If three consecutive sunroof close attempts result in Pinch Protect reversals, the fourth close attempt will be a Manual Close movement with Pinch Protect disabled.

Wind Buffeting

Wind buffeting can be described as the perception of pressure on the ears or a helicopter-type sound in the ears. Your vehicle may exhibit wind buffeting with the windows down, or the sunroof (if equipped) in certain open or partially open positions. This is a normal occurrence and can be minimized. If the buffeting occurs with the rear windows open, open the front and rear windows

together to minimize the buffeting. If the buffeting occurs with the sunroof open, adjust the sunroof opening to minimize the buffeting or open any window.

Sunroof Maintenance

Use only a non-abrasive cleaner and a soft cloth to clean the glass panel.

Ignition Off Operation

For vehicles not equipped with the Electronic Vehicle Information Center (EVIC), the power sunroof switch will remain active for 45 seconds after the ignition switch is turned to the LOCK position. Opening either front door will cancel this feature.

NOTE:

- For vehicles equipped with the EVIC, the power sunroof switch will remain active for up to approximately ten minutes after the ignition switch is turned to the LOCK position. Opening either front door will cancel this feature.
- The Ignition Off time is programmable using the Uconnect Touch™ System. Refer to "Uconnect Touch™ Settings" in "Understanding Your Instrument Panel" for further information.

Sunroof Fully Closed

Press the switch forward and release to ensure that the sunroof is fully closed.

ELECTRICAL POWER OUTLETS

There are three 12 Volt (13 Amp) electrical power outlets on this vehicle. The power outlets are protected by a fuse.

Insert cigar lighter or accessory plug into the power outlets for use to ensure proper operation.

NOTE: To ensure proper operation, a MOPAR® knob and element must be used.

CAUTION!

- **Do not exceed the maximum power of 160 Watts (13 Amps) at 12 Volts. If the 160 Watt (13 Amp) power rating is exceeded, the fuse protecting the system will need to be replaced.**
- **Power outlets are designed for accessory plugs only. Do not insert any other object in the power outlets as this will damage the outlet and blow the fuse. Improper use of the power outlet can cause damage not covered by your New Vehicle Limited Warranty.**

The front 12 Volt power outlet has power available only when the ignition is placed in the ACC or RUN position.

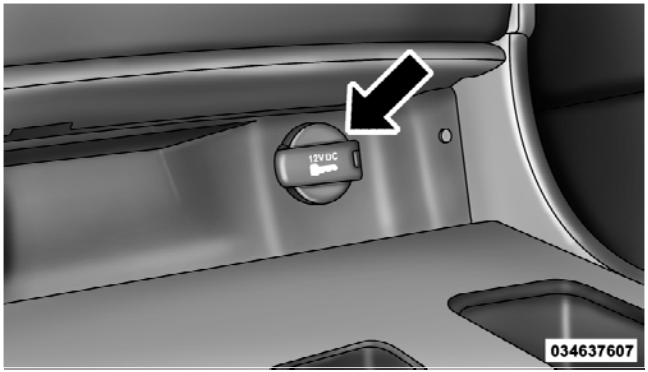

Front Power Outlet

WARNING!

Do not place ashes inside the cubby bin located on the center console on vehicle's not equipped with the ash receiver tray. A fire leading to bodily injury could result.

The center console outlet is powered directly from the battery (power available at all times). Items plugged into this outlet may discharge the battery and/or prevent the engine from starting.

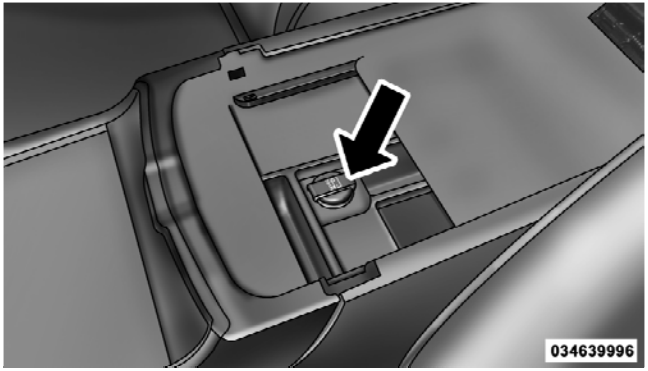

Center Console Power Outlet

There is also a 12 volt power outlet located on the back of the center console for rear passengers. This power outlet has power available only when the ignition is placed in the ACC or RUN position.

Rear Center Console Power Outlet

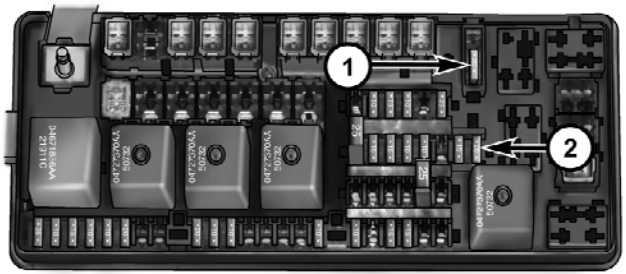

Power Outlet Fuse Locations

1 — #12 Fuse 20 A Yellow Cigar Lighter Instrument Panel And Power Outlet Console Rear
2 — #38 Fuse 20 A Yellow Power Outlet Inside Arm Rest

WARNING!

To avoid serious injury or death:

- **Only devices designed for use in this type of outlet should be inserted into any 12 Volt outlet.**
- **Do not touch with wet hands.**
- **Close the lid when not in use and while driving the vehicle.**
- **If this outlet is mishandled, it may cause an electric shock and failure.**

CAUTION!

- **Many accessories that can be plugged in draw power from the vehicle's battery even when not in use (i.e., cellular phones, etc.). Eventually, if plugged in long enough, the vehicle's battery will discharge sufficiently to degrade battery life and/or prevent the engine from starting.**
- **Accessories that draw higher power (i.e., coolers, vacuum cleaners, lights, etc.) will degrade the battery even more quickly. Only use these intermittently and with greater caution.**

(Continued)

CAUTION! (Continued)

- **After the use of high power draw accessories or long periods of the vehicle not being started (with accessories still plugged in), the vehicle must be driven a sufficient length of time to allow the alternator to recharge the vehicle's battery.**
- **Power outlets are designed for accessory plugs only. Do not hang any type of accessory or accessory bracket from the plug. Improper use of the power outlet can cause damage.**

CUPHOLDERS

Front Seat Cupholders

The cupholders are located in the forward edge of the center console.

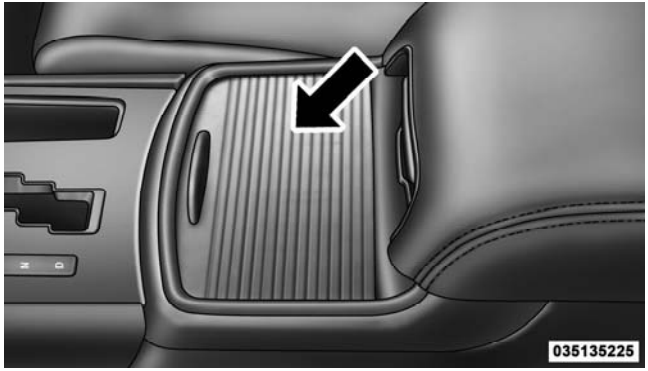

Retractable Cover

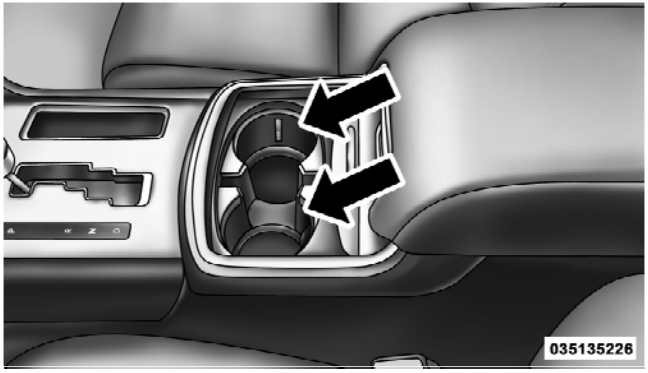

Front Cupholders

Heated and Cooled Cupholders — If Equipped

Your vehicle may be equipped with heated and cooled cupholders. The cupholders are designed to help keep warm beverages warm and cold beverages cool.

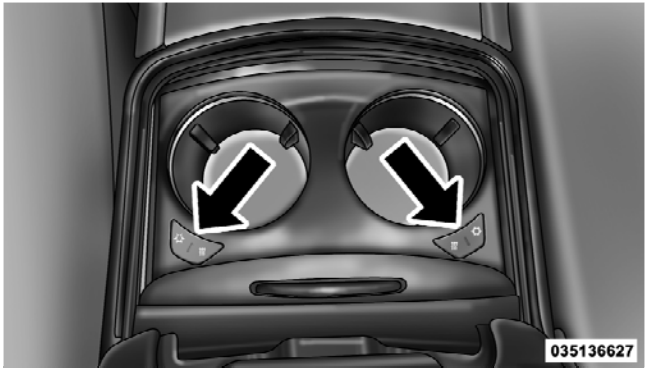

Heated And Cooled Cupholder Switches

Press the "Cold" symbol once to turn on the cupholder; press the symbol a second time to turn the cupholder off. Press the "Hot" symbol once to activate the cupholder; press the symbol a second time to turn off the cupholder.

WARNING!

When using the cupholder in the "Heat" position, avoid contact with the heated portion of the cupholder in order to reduce the possibility of burns. Persons who are unable to feel pain to the skin because of advanced age, chronic illness, diabetes, spinal cord injuries, medication, alcohol use, exhaustion or other physical condition must exercise particular care in order to prevent serious burn injury. Keep the cupholder free of debris or stray objects when operated in the Heat position.

Rear Seat Cupholders

The rear seat cupholders are located in the center armrest between the rear seats. The cupholders are positioned forward in the armrest and side-by-side to provide convenient access to beverage cans or bottles while maintaining a resting place for the rear occupant' s elbows.

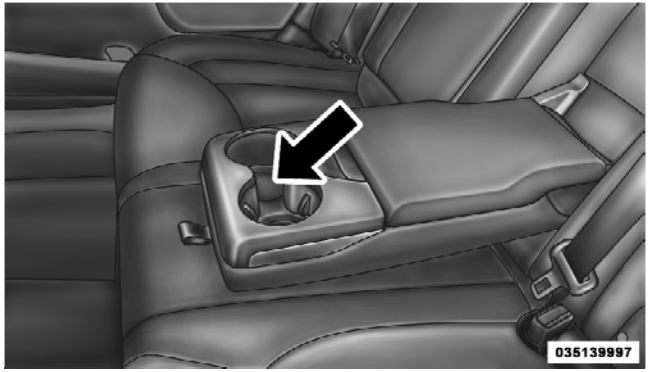

Rear Seat Cupholders

Lighted Cupholders — If Equipped

On some vehicles the rear cupholders are equipped with a light ring that illuminates the cupholders for the rear passengers. The light ring is controlled by the Dimmer Control. Refer to "Lights" in "Understanding The Features Of Your Vehicle" for further information.

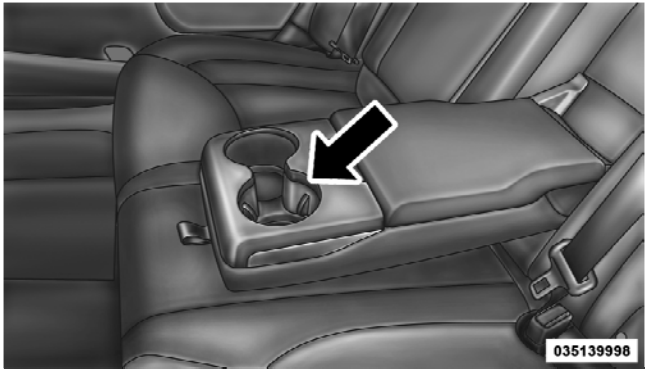

Light Ring In Rear Cupholder

STORAGE

Glovebox Storage

The glovebox storage compartment is located on the passenger side of the instrument panel.

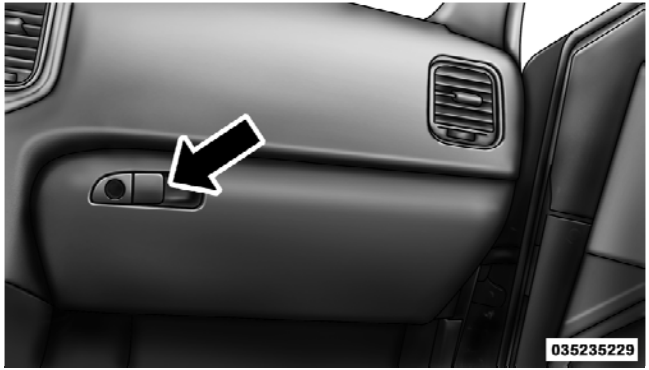

Glovebox Storage Compartment

Opened Glovebox Storage Compartment

Console Features

There is a cubby bin located forward of the shift lever. The cubby bin is covered with a push-push actuated door. Push inward on the door to open it, push the door a second time to close it.

Two separate storage compartments are also located underneath the center console armrest.

Center Console

Inside the center console armrest, there is a removable upper storage tray that can be slid forward/rearward on rails for access to the lower storage area. This tray has an integrated coin holder, along with additional area for small items like an ipod or phone. Below the upper tray, the lower storage compartment is made for larger items, like CDs and tissue boxes. In addition, the 12 volt power outlet, USB and Aux jack are located here.

WARNING!

Do not operate this vehicle with a console compartment lid in the open position. Cellular phones, music players, and other handheld electronic devices should be stowed while driving. Use of these devices while driving can cause an accident due to distraction, resulting in death or injury.

Door Storage

The door panels contain storage areas.

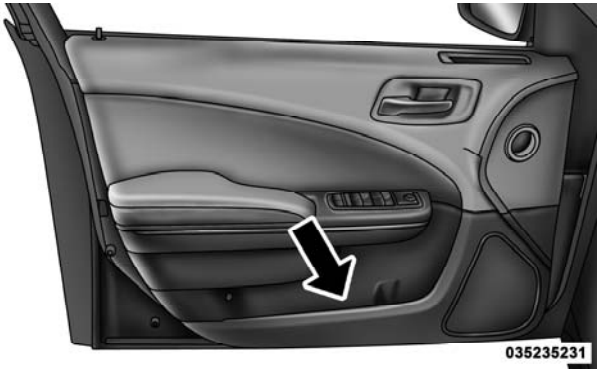

Front Door Trim Storage

Rear Seat Armrest Storage — If Equipped

For rear passengers there is a storage bin located in the armrest. Lift upward on the latch to open the storage compartment.

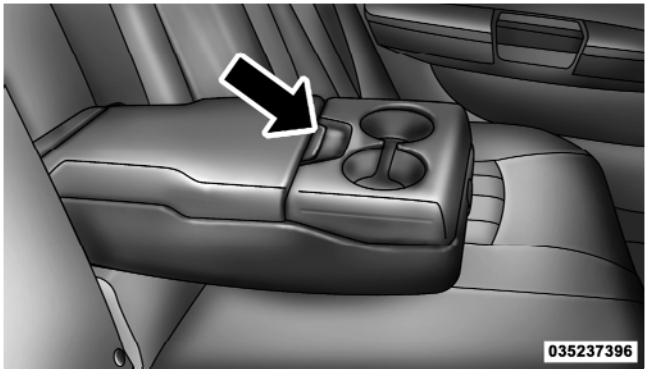

Rear Armrest Storage

Cargo Area — Vehicles Equipped with 60/40 Split-Folding Rear Seat

The 60/40 split-folding rear seat provides cargo-carrying versatility. The seatbacks fold down easily by pulling nylon tabs between the seatbacks and the bolsters. When the seats are folded down, they provide a continuous, nearly-flat extension of the load floor.

When the seatback is folded to the upright position, make sure it is latched by strongly pulling on the top of the seatback above the seat strap.

WARNING!

- **Be certain that the seatback is securely locked into position. If the seatback is not securely locked into position, the seat will not provide the proper stability for child seats and/or passengers. An improperly latched seat could cause serious injury.**

(Continued)

WARNING! (Continued)

- **The cargo area in the rear of the vehicle (with the rear seatbacks in the locked-up or folded down position) should not be used as a play area by children when the vehicle is in motion. They could be seriously injured in a collision. Children should be seated and using the proper restraint system.**
- **To help protect against personal injury, passengers should not be seated in the rear cargo area. The rear cargo space is intended for load carrying purposes only, not for passengers, who should sit in seats and use seat belts.**

WARNING!

The weight and position of cargo and passengers can change the vehicle center of gravity and vehicle handling. To avoid loss of control resulting in personal injury, follow these guidelines for loading your vehicle:

- **Always place cargo evenly on the cargo floor. Put heavier objects as low and as far forward as possible.**
- **Place as much cargo as possible in front of the rear axle. Too much weight or improperly placed weight over or behind the rear axle can cause the rear of the vehicle to sway.**
- **Do not pile luggage or cargo higher than the top of the seatback. This could impair visibility or become a dangerous projectile in a sudden stop or collision.**

CARGO AREA FEATURES

Trunk Mat — If Equipped

A trunk mat covers the bottom of the cargo area. The trunk mat is used to protect the interior of the trunk from mud, snow, and debris.

GROCERY BAG HOOKS

The rear cargo area is equipped with grocery bag hooks, located on either side of the rear cargo area.

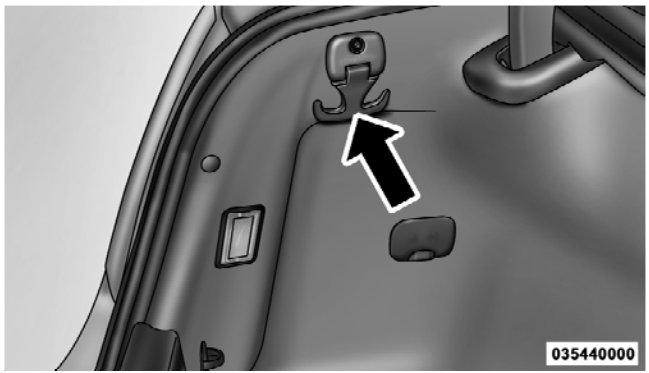

Grocery Bag Hooks

CAUTION!

Do not exceed the maximum weight limit 50 lbs (22 kg) of the grocery bag hook. Damage may occur to hook and mounting surface.

REAR WINDOW FEATURES

Rear Window Defroster

The rear window defroster button is located on the climate control. Press this button to turn on the rear window defroster and the heated outside mirrors (if equipped). An indicator in the button will illuminate when the rear window defroster is on. The rear window defroster automatically turns off after approximately 10 minutes. For an additional five minutes of operation, press the button a second time.

CAUTION!

Failure to follow these cautions can cause damage to the heating elements:

- **Use care when washing the inside of the rear window. Do not use abrasive window cleaners on the interior surface of the window. Use a soft cloth and a mild washing solution, wiping parallel to the heating elements. Labels can be peeled off after soaking with warm water.**
- **Do not use scrapers, sharp instruments, or abrasive window cleaners on the interior surface of the window.**
- **Keep all objects a safe distance from the window.**

Power Sunshade — If Equipped

Your vehicle may be equipped with a power sunshade that will reduce the amount of sunlight that will shine through the rear windshield.

The power sunshade can be operated using the Uconnect Touch™ System.

Press the "Controls" soft-key and then press the "Sunshade" soft-key to raise the power sunscreen. Press the "Sunshade" soft-key a second time to lower the sunshade.

If the sunshade is in the raised position and the vehicle is placed in REVERSE, the sunshade will automatically fully lower. When the transmission is shifted out of REVERSE the sunshade will automatically return to the fully raised position after approximately five seconds.

NOTE: The rear sunshade control switch can be locked out with the rear passenger window controls from the driver switch window lockout switch.

Controls Soft-Key

Power Sunshade Soft-Key

3

The power sunshade can also be operated by passengers in the rears seats. The power sunshade switch is located on the back of the center console between the heated seat switches. Press the switch once to raise the sunshade. Press the switch a second time to lower the sunshade.

Power Sunshade Switch

LOAD LEVELING SYSTEM — IF EQUIPPED

The automatic load leveling system will provide a level-riding vehicle under most passenger and cargo loading conditions.

A hydraulic pump contained within the shock absorbers raises the rear of the vehicle to the correct height. It takes approximately 1 mile (1.6 km) of driving for the leveling to complete depending on road surface conditions.

If the leveled vehicle is not moved for approximately 15 hours, the leveling system will bleed itself down. The vehicle must be driven to reset the system.

UNDERSTANDING YOUR INSTRUMENT PANEL

CONTENTS

- Instrument Panel Features 273
- Instrument Cluster 274
- Instrument Cluster — Premium 275
- Instrument Cluster Descriptions 276
- Electronic Vehicle Information Center (EVIC) . . 285
  - Electronic Vehicle Information Center (EVIC) Displays 287
  - EVIC White Telltales 288
  - EVIC Amber Telltales 289
  - EVIC Red Telltales 290
  - Oil Change Due 293
  - Fuel Economy 294
  - Cruise Control 296
  - Vehicle Speed 296
  - Trip Info 297
  - Tire PSI 298
  - Vehicle Info (Customer Information Features) 298

- Messages # 299
- Turn Menu Off 299

■ Uconnect Touch™ Settings 299

- Hard-Keys 299
- Soft-Keys 299
- Customer Programmable Features — Uconnect Touch™ 4.3 Settings (If Equipped) 300
- Customer Programmable Features — Uconnect Touch™ System 8.4 Settings (If Equipped) 313

■ Setting The Analog Clock 328

■ iPod®/USB/MP3 Control — If Equipped 328

■ Harman Kardon® Logic7® High Performance Multichannel Surround Sound System With Driver-Selectable Surround (DSS) — If Equipped 328

■ Steering Wheel Audio Controls 330

- Radio Operation 330
- CD Player 331

■ CD/DVD Disc Maintenance 331

■ Radio Operation And Mobile Phones 332

■ Climate Controls 332

- General Overview 333
- Climate Control Functions 339
- Automatic Temperature Control (ATC) 340
- Operating Tips 341

INSTRUMENT PANEL FEATURES

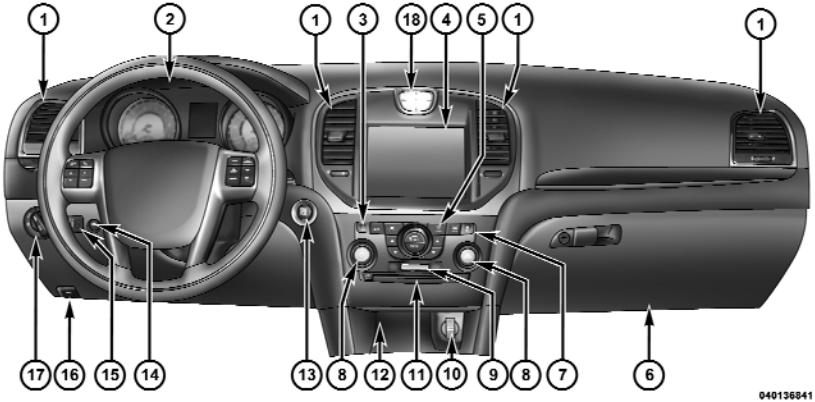

1 — Air Outlet
2 — Instrument Cluster
3 — Hazard Switch
4 — Uconnect Touch™ System
5 — Climate Control Hard Controls
6 — Glove Compartment
7 — ESC Off Switch
8 — Uconnect Touch™ System Hard Controls
9 — SD Memory Card Slot
10 — Power Outlet
11 — CD/DVD Slot
12 — Storage Compartment
13 — Engine Start/Stop Button
14 — Trunk Release Button
15 — Dimmer Controls
16 — Hood Release
17 — Headlight Switch
18 — Analog Clock

INSTRUMENT CLUSTER

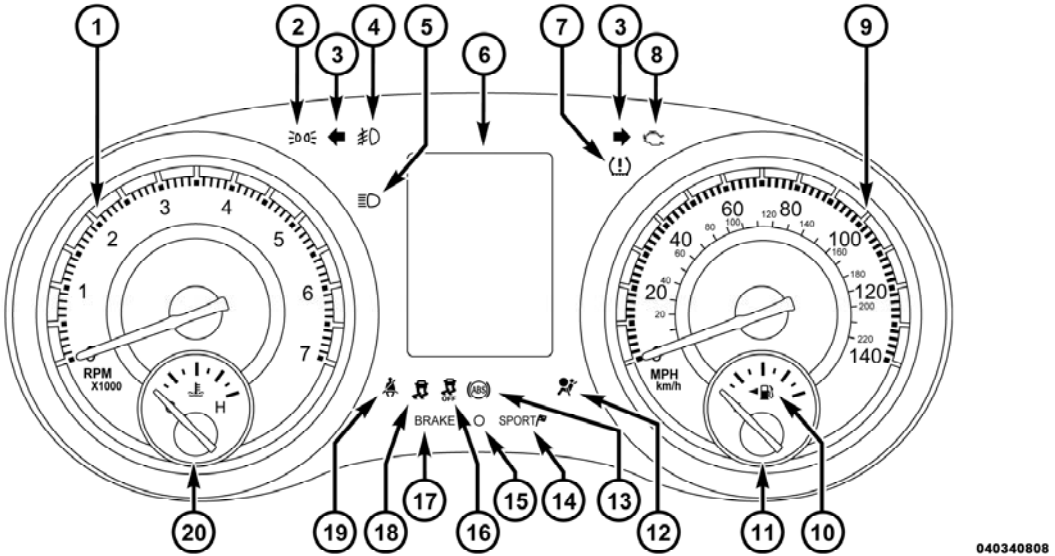

INSTRUMENT CLUSTER — PREMIUM

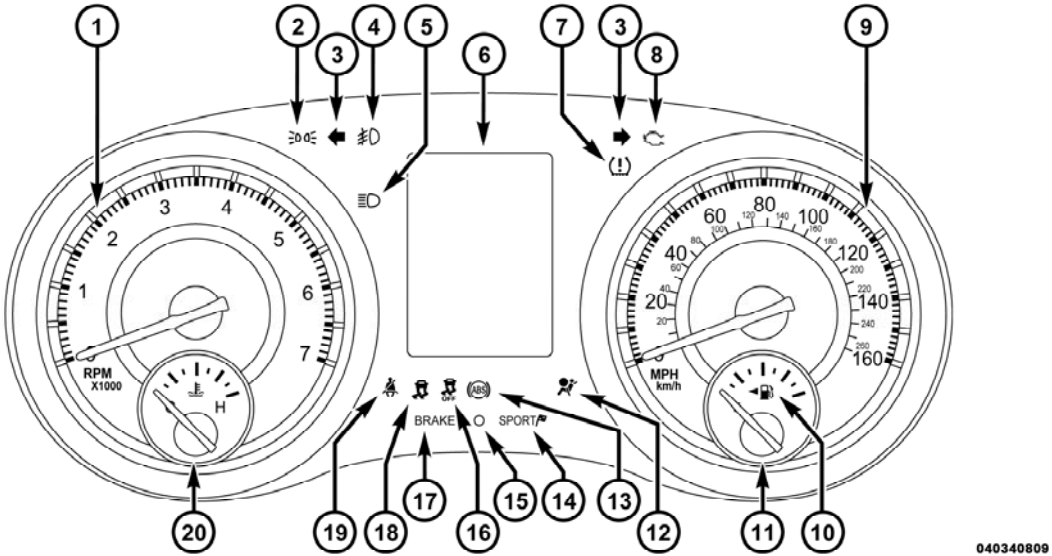

INSTRUMENT CLUSTER DESCRIPTIONS

1. Tachometer

This gauge measures engine revolutions-per-minute (RPM x 1000).

2. Park/Headlight ON Indicator — If Equipped

This indicator will illuminate when the park lights or headlights are turned on.

3. Turn Signal Indicators

The arrow will flash with the exterior turn signal when the turn signal lever is operated.

If the vehicle electronics sense that the vehicle is driven more than 1 mile (1.6 km) with either turn signal on, a continuous chime will sound to alert you to turn the signals off. If either indicator flashes at a rapid rate, check for a defective outside light bulb.

4. Front Fog Light Indicator — If Equipped

This indicator will illuminate when the front fog lights are on.

5. High Beam Indicator

This indicator shows that the high beam headlights are on. Push the multifunction lever forward to switch the headlights to high beam, and pull toward yourself (normal position) to return to low beam.

6. Odometer Display / Electronic Vehicle Information Center (EVIC) Display

Odometer Display

The odometer display shows the total distance the vehicle has been driven.

U.S. Federal regulations require that upon transfer of vehicle ownership, the seller certify to the purchaser the correct mileage that the vehicle has been driven. If your odometer needs to be repaired or serviced, the repair

technician should leave the odometer reading the same as it was before the repair or service. If s/he cannot do so, then the odometer must be set at zero, and a sticker must be placed in the door jamb stating what the mileage was before the repair or service. It is a good idea for you to make a record of the odometer reading before the repair/service, so that you can be sure that it is properly reset, or that the door jamb sticker is accurate if the odometer must be reset at zero.

Electronic Vehicle Information Center (EVIC) Display

The Electronic Vehicle Information Center (EVIC) features a driver-interactive display that is located in the instrument cluster. For further information, refer to "Electronic Vehicle Information Center (EVIC)".

The Shift Lever Indicator is self-contained within the EVIC display. It displays the gear position of the automatic transmission.

NOTE:

- You must apply the brakes before shifting from PARK.
- The highest available transmission gear is displayed in the lower right corner of the Electronic Vehicle Information Center (EVIC) whenever the Electronic Range Select (ERS) feature is active. Use the +/- selector on the shift lever to activate ERS. Refer to "Automatic Transmission" in "Starting And Operating" for further information.

7. Tire Pressure Monitoring Telltale Light — If Equipped

Each tire, including the spare (if provided), should be checked monthly when cold and inflated to the inflation pressure recommended by the vehicle manufacturer on the vehicle placard or tire inflation pressure label. (If your vehicle has tires of a different size than the size indicated on the vehicle placard or tire inflation pressure label, you should determine the proper tire inflation pressure for those tires.)

As an added safety feature, your vehicle has been equipped with a Tire Pressure Monitoring System (TPMS) that illuminates a low tire pressure telltale when one or more of your tires is significantly under-inflated. Accordingly, when the low tire pressure telltale illuminates, you should stop and check your tires as soon as possible, and inflate them to the proper pressure. Driving on a significantly under-inflated tire causes the tire to overheat and can lead to tire failure. Under-inflation also reduces fuel efficiency and tire tread life, and may affect the vehicle's handling and stopping ability.

Please note that the TPMS is not a substitute for proper tire maintenance, and it is the driver's responsibility to maintain correct tire pressure, even if under-inflation has not reached the level to trigger illumination of the TPMS low tire pressure telltale.

Your vehicle has also been equipped with a TPMS malfunction indicator to indicate when the system is not operating properly. The TPMS malfunction indicator is combined with the low tire pressure telltale. When the system detects a malfunction, the telltale will flash for approximately one minute and then remain continuously illuminated. This sequence will continue upon subsequent vehicle start-ups as long as the malfunction exists. When the malfunction indicator is illuminated, the system may not be able to detect or signal low tire pressure as intended. TPMS malfunctions may occur for a variety of reasons, including the installation of replacement or alternate tires or wheels on the vehicle that prevent the TPMS from functioning properly. Always check the TPMS malfunction telltale after replacing one or more tires or wheels on your vehicle, to ensure that the replacement or alternate tires and wheels allow the TPMS to continue to function properly.

CAUTION!

The TPMS has been optimized for the original equipment tires and wheels. TPMS pressures and warning have been established for the tire size equipped on your vehicle. Undesirable system operation or sensor damage may result when using replacement equipment that is not of the same size, type, and/or style. Aftermarket wheels can cause sensor damage. Do not use tire sealant from a can or balance beads if your vehicle is equipped with a TPMS, as damage to the sensors may result.

8. Malfunction Indicator Light (MIL)

The Malfunction Indicator Light (MIL) is part of an onboard diagnostic system, called OBD, that monitors engine and automatic transmission control systems. The light will illuminate when the key is in the ON/RUN position, before engine start. If the bulb does not come on when turning the key from OFF to ON/RUN, have the condition checked promptly.

Certain conditions, such as poor fuel quality, etc., may illuminate the MIL after engine start. The vehicle should be serviced if the light stays on through several of your typical driving cycles. In most situations, the vehicle will drive normally and will not require towing.

CAUTION!

Prolonged driving with the MIL on could cause damage to the engine control system. It also could affect fuel economy and drivability. If the MIL is flashing, severe catalytic converter damage and power loss will soon occur. Immediate service is required.

WARNING!

A malfunctioning catalytic converter, as referenced above, can reach higher temperatures than in normal operating conditions. This can cause a fire if you drive slowly or park over flammable substances such as dry plants, wood, cardboard, etc. This could result in death or serious injury to the driver, occupants or others.

9. Speedometer
Indicates vehicle speed.

10. Fuel Door Reminder

The arrow in this symbol is a reminder that the Fuel Filler Door is located on the left side of the vehicle.

11. Fuel Gauge
The pointer shows the level of fuel in the fuel tank when the ignition switch is in the ON/RUN position.

12. Air Bag Warning Light

This light will turn on for four to eight seconds as a bulb check when the ignition switch is first turned to ON/RUN. If the light is either not on during starting, stays on, or turns on while driving, have the system inspected at an authorized dealer as soon as possible. Refer to "Occupant Restraints" in "Things To Know Before Starting Your Vehicle" for further information.

13. Anti-Lock Brake (ABS) Light

This light monitors the Anti-Lock Brake System (ABS). The light will turn on when the ignition switch is turned to the ON/RUN position and may stay on for as long as four seconds.

If the ABS light remains on or turns on while driving, it indicates that the Anti-Lock portion of the brake system is not functioning and that service is required. However, the conventional brake system will continue to operate normally if the BRAKE warning light is not on.

If the ABS light is on, the brake system should be serviced as soon as possible to restore the benefits of Anti-Lock brakes. If the ABS light does not turn on when the ignition switch is turned to the ON/RUN position, have the light inspected by an authorized dealer.

14. Sport Mode — If Equipped

SPORT

This light will illuminate when the sport mode is selected. This mode provides performance based tuning. For further information, refer to "Sport Mode" in "Starting And Operating".

15. Vehicle Security Light — If Equipped

This light will flash at a fast rate for approximately 15 seconds, when the vehicle security alarm is arming, and then will flash slowly until the vehicle is disarmed.

16. Electronic Stability Control (ESC) OFF Indicator Light — If Equipped

OFF

This light indicates the Electronic Stability Control (ESC) is off.

17. Brake Warning Light

BRAKE

This light monitors various brake functions, including brake fluid level and parking brake application. If the brake light turns on it may indicate that the parking brake is applied, that the brake fluid level is low, or that there is a problem with the anti-lock brake system reservoir.

If the light remains on when the parking brake has been disengaged, and the fluid level is at the full mark on the master cylinder reservoir, it indicates a possible brake hydraulic system malfunction or that a problem with the Brake Booster has been detected by the Anti-Lock Brake System (ABS) / Electronic Stability Control (ESC) system.

In this case, the light will remain on until the condition has been corrected. If the problem is related to the brake booster, the ABS pump will run when applying the brake and a brake pedal pulsation may be felt during each stop.

The dual brake system provides a reserve braking capacity in the event of a failure to a portion of the hydraulic system. A leak in either half of the dual brake system is indicated by the Brake Warning Light, which will turn on when the brake fluid level in the master cylinder has dropped below a specified level.

The light will remain on until the cause is corrected.

NOTE: The light may flash momentarily during sharp cornering maneuvers, which change fluid level conditions. The vehicle should have service performed, and the brake fluid level checked.

If brake failure is indicated, immediate repair is necessary.

WARNING!

Driving a vehicle with the red brake light on is dangerous. Part of the brake system may have failed. It will take longer to stop the vehicle. You could have a collision. Have the vehicle checked immediately.

Vehicles equipped with the Anti-Lock Brake System (ABS), are also equipped with Electronic Brake Force Distribution (EBD). In the event of an EBD failure, the Brake Warning Light will turn on along with the ABS Light. Immediate repair to the ABS system is required.

Operation of the Brake Warning Light can be checked by turning the ignition switch from the OFF position to the ON/RUN position. The light should illuminate for approximately two seconds. The light should then turn off unless the parking brake is applied or a brake fault is detected. If the light does not illuminate, have the light inspected by an authorized dealer.

The light also will turn on when the parking brake is applied with the ignition switch in the ON/RUN position.

NOTE: This light shows only that the parking brake is applied. It does not show the degree of brake application.

18. Electronic Stability Control (ESC) Activation/ Malfunction Indicator Light — If Equipped

The "ESC Activation/Malfunction Indicator Light" in the instrument cluster will come on when the ignition switch is turned to the ON/RUN position. It should go out with the engine running. If the "ESC Activation/Malfunction Indicator Light" comes on continuously with the engine running, a malfunction has been detected in the ESC system. If this light remains on after several ignition cycles, and the vehicle has been driven several miles (kilometers) at speeds greater than 30 mph (48 km/h), see your authorized dealer as soon as possible to have the problem diagnosed and corrected.

NOTE:

- The "ESC Off Indicator Light" and the "ESC Activation/Malfunction Indicator Light" come on momentarily each time the ignition switch is turned to ON/RUN.
- Each time the ignition is turned to ON/RUN, the ESC system will be ON, even if it was turned off previously.
- The ESC system will make buzzing or clicking sounds when it is active. This is normal; the sounds will stop when ESC becomes inactive following the maneuver that caused the ESC activation.

19. Seat Belt Reminder Light

When the ignition switch is first turned to ON/RUN, this light will turn on for four to eight seconds as a bulb check. During the bulb check, if the driver's seat belt is unbuckled, a chime will sound. After the bulb check or when driving, if the driver's seat belt remains unbuckled, the Seat Belt Reminder Light will illuminate and the chime will sound. Refer to "Occupant Restraints" in "Things To Know Before Starting Your Vehicle" for further information.

20. Temperature Gauge

The temperature gauge shows engine coolant temperature. Any reading within the normal range indicates that the engine cooling system is operating satisfactorily.

The gauge pointer will likely indicate a higher temperature when driving in hot weather, up mountain grades, or when towing a trailer. It should not be allowed to exceed the upper limits of the normal operating range.

CAUTION!

Driving with a hot engine cooling system could damage your vehicle. If the temperature gauge reads "H" pull over and stop the vehicle. Idle the vehicle with the air conditioner turned off until the pointer drops back into the normal range. If the pointer remains on the "H" and you hear continuous chimes, turn the engine off immediately and call an authorized dealership for service.

WARNING!

A hot engine cooling system is dangerous. You or others could be badly burned by steam or boiling coolant. You may want to call an authorized dealership for service if your vehicle overheats. If you decide to look under the hood yourself, see "Maintaining Your Vehicle". Follow the warnings under the Cooling System Pressure Cap paragraph.

ELECTRONIC VEHICLE INFORMATION CENTER (EVIC)

The Electronic Vehicle Information Center (EVIC) features a driver-interactive display that is located in the instrument cluster.

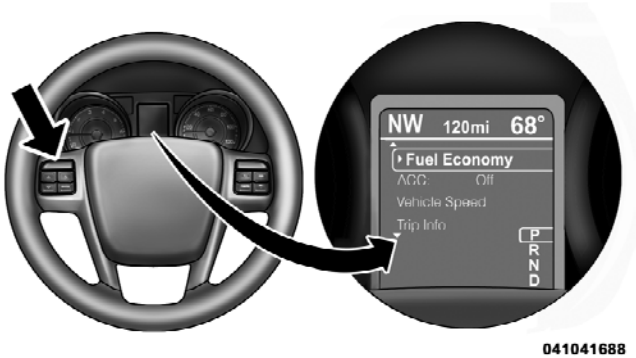

Electronic Vehicle Information Center (EVIC)

This system allows the driver to select a variety of useful information by pressing the switches mounted on the steering wheel. The EVIC consists of the following:

- Radio Info
- Fuel Economy Info
- Cruise Control Info
- Digital Vehicle Speed
- Trip Info
- Tire Pressure
- Vehicle Info
- Stored Warning Messages
- Turn Menu OFF

The system allows the driver to select information by pressing the following buttons mounted on the steering wheel:

EVIC Steering Wheel Buttons

UP Button

Press and release the UP button to scroll upward through the main menu and Vehicle Info and Trip Info sub-menus (Fuel Economy, Vehicle Info, Tire PSI, Cruise, Messages, Trip Info, Vehicle Speed, and Turn Menu OFF) and sub-menus.

DOWN Button

Press and release the DOWN button to scroll downward through the main menu and Vehicle Info and Trip Info sub-menus (Fuel Economy, Vehicle Info, Tire PSI, Cruise, Messages, Trip Info, Vehicle Speed, and Turn Menu OFF) and sub-menus.

SELECT Button

Press and release the SELECT button to access the information screens or sub-menu screens of a main menu item. Press and hold the SELECT button for two seconds to reset displayed/selected features that can be reset.

BACK Button

BACK Press the BACK button to return to the main menu from an info screen or sub-menu item.

Electronic Vehicle Information Center (EVIC) Displays

The EVIC display consists of three sections:

1. The top line where compass direction, odometer line and outside temperature are displayed.

2. The main display area where the menus and pop up messages are displayed.

3. The reconfigurable telltales section below the odometer line.

The main display area will normally display the main menu or the screens of a selected feature of the main menu. The main display area also displays ″pop up″ messages that consist of approximately 60 possible warning or information messages. These pop up messages fall into several categories:

- ***Five Second Stored Messages***

When the appropriate conditions occur, this type of message takes control of the main display area for five seconds and then returns to the previous screen. Most of the messages of this type are then stored (as long as the condition that activated it remains active) and can be reviewed from the ″Messages″ main menu item. As long as there is a stored message, an ″i″ will be displayed in the EVIC's compass/outside temp line. Examples of this message type are ″Right Front Turn Signal Lamp Out″ and ″Low Tire Pressure″.

- ***Unstored Messages***

This message type is displayed indefinitely or until the condition that activated the message is cleared. Examples of this message type are ″Turn Signal On″ (if a turn signal is left on) and ″Lights On″ (if driver leaves the vehicle).

- *Unstored Messages Until RUN*

These messages deal primarily with the Remote Start feature. This message type is displayed until the ignition is in the RUN state. Examples of this message type are "Remote Start Aborted - Door Ajar" and "Press Brake Pedal and Push Button to Start".

- *Five Second Unstored Messages*

When the appropriate conditions occur, this type of message takes control of the main display area for five seconds and then returns to the previous screen. Examples of this message type are "Memory System Unavailable - Not in Park" and "Automatic High Beams On".

The Reconfigurable Telltales section is divided into the white telltales area on the right, amber telltales in the middle, and red telltales on the left.

EVIC White Telltales

This area will show reconfigurable white caution telltales. These telltales include:

- *Shift Lever Status*

The selected AutoStick gear is displayed as "1", "2", "3", "4", "5", or "6" and indicate the Electronic Range Select (ERS) feature has been engaged and the gear selected is displayed. For further information on ERS, refer to "Starting And Operating".

- *Electronic Speed Control ON*

This telltale will illuminate when the electronic speed control is ON. For further information, refer to "Electronic Speed Control" in "Understanding The Features Of Your Vehicle."

- *Electronic Speed Control SET*

This telltale will illuminate when the electronic speed control is SET. For further information, refer to “Electronic Speed Control” in “Understanding The Features Of Your Vehicle.”

- *Adaptive Cruise Control (ACC) ON*

This telltale will illuminate when the ACC is ON. For further information, refer to “Adaptive Cruise Control (ACC)” in “Understanding The Features Of Your Vehicle.”

- *Adaptive Cruise Control (ACC) SET*

This telltale will illuminate when the ACC is SET. For further information, refer to “Adaptive Cruise Control (ACC)” in “Understanding The Features Of Your Vehicle.”

EVIC Amber Telltales

This area will show reconfigurable amber caution telltales. These telltales include:

- *Forward Collision Warning (FCW) OFF*

This telltale informs the driver that the Forward Collision Warning feature is Off. The telltale is On when the front radar sensor is blocked and requires cleaning, the ACC/FCW sensors require service, or the ACC/FCW system is unavailable because of a system error. For further information, refer to “Adaptive Cruise Control (ACC)” in “Understanding The Features Of Your Vehicle.”

- *Low Fuel Telltale*

When the fuel level reaches approximately 3.0 gal (11.0 L) this light will turn on, and remain on until fuel is added.

- *Windshield Washer Fluid Low Indicator*

This telltale will turn on to indicate the windshield washer fluid is low.

- *Adaptive Cruise Control (ACC) Malfunction*

This light will turn on when a ACC is not operating and needs service. For further information, refer to "Adaptive Cruise Control (ACC)" in "Understanding The Features Of Your Vehicle."

- *SERV AWD (Service All Wheel Drive) Indicator*

This light will turn on when the All Wheel Drive feature requires service. For further information, refer to "All Wheel Drive" in "Starting And Operating."

EVIC Red Telltales

This area will show reconfigurable red telltales. These telltales include:

- *Door Ajar*

This telltale turns on when one or more doors are ajar. The telltale will show which doors are ajar.

- *Trunk Ajar*

This light will turn on to indicate that the trunk lid is ajar.

- *Oil Pressure Warning Telltale*

This telltale indicates low engine oil pressure. If the light turns on while driving, stop the vehicle and shut off the engine as soon as possible. A chime will sound when this light turns on.

Do not operate the vehicle until the cause is corrected. This light does not show how much oil is in the engine. The engine oil level must be checked under the hood.

- *Charging System Telltale*

This telltale shows the status of the electrical charging system. If the telltale stays on or comes on while driving, turn off some of the vehicle's non-essential electrical devices or increase engine speed (if at idle). If the charging system telltale remains on, it means that the vehicle is experiencing a problem with the charging system. Obtain SERVICE IMMEDIATELY. See an authorized dealer.

If jump starting is required, refer to "Jump Starting Procedures" in "What To Do In Emergencies".

- *Electronic Throttle Control (ETC) Telltale*

This telltale informs you of a problem with the Electronic Throttle Control (ETC) system. If the telltale comes on while driving, have the system checked by an authorized dealer.

If a problem is detected, the telltale will come on while the engine is running. Cycle the ignition key when the vehicle has completely stopped and the shift lever is placed in the PARK position. The telltale should turn off.

If the telltale remains lit with the engine running, your vehicle will usually be drivable. However, see an authorized dealer for service as soon as possible. If the telltale is flashing when the engine is running, immediate service is required. You may experience reduced performance, an elevated/rough idle or engine stall and your vehicle may require towing.

- *Engine Temperature Warning Telltale*

This telltale warns of an overheated engine condition. As temperatures rise and the gauge approaches **H,** this telltale will illuminate and a single chime will sound after reaching a set threshold. Further overheating will cause the temperature gauge to pass **H,** a continuous chime will occur until the engine is allowed to cool.

If the telltale turns on while driving, safely pull over and stop the vehicle. If the A/C system is on, turn it off. Also, shift the transmission into NEUTRAL and idle the vehicle. If the temperature reading does not return to normal, turn the engine off immediately and call for service. Refer to "If Your Engine Overheats" in "What To Do In Emergencies" for more information.

- *Transmission Temperature Warning Telltale*

This telltale indicates that the transmission fluid temperature is running hot. This may occur with severe usage, such as trailer towing.

If this telltale turns on, safely pull over and stop the vehicle. Then, shift the transmission into NEUTRAL and run the engine at idle or faster until the light turns off.

CAUTION!

Continuous driving with the Transmission Temperature Warning Telltale illuminated will eventually cause severe transmission damage or transmission failure.

WARNING!

If the Transmission Temperature Warning Telltale is illuminated and you continue operating the vehicle, in some circumstances you could cause the fluid to boil over, come in contact with hot engine or exhaust components and cause a fire.

- *Electric Power Steering Malfunction*

This telltale is on when the Electric Power Steering is not operating and needs service.

Oil Change Due

Your vehicle is equipped with an engine oil change indicator system. The "Oil Change Due" message will display in the EVIC for five seconds after a single chime has sounded at the start of each ignition that an oil change is due. The engine oil change indicator system is duty cycle based, which means the engine oil change interval may fluctuate dependent upon your personal driving style.

Unless reset, this message will continue to display each time you cycle the ignition to the ON/RUN position. To turn off the message temporarily, press and release the MENU button. To reset the oil change indicator system (after performing the scheduled maintenance), perform the following procedure:

1. Without pressing the brake pedal, push the ENGINE START/STOP button and cycle the ignition to the ON/RUN position (Do not start the engine.)

2. Fully depress the accelerator pedal, slowly, three times within 10 seconds.

3. Without pressing the brake pedal, push the ENGINE START/STOP button once to return the ignition to the OFF/LOCK position.

NOTE: If the indicator message illuminates when you start the vehicle, the oil change indicator system did not reset. If necessary, repeat this procedure.

Fuel Economy

Press and release the UP or DOWN button until "Fuel Economy" is highlighted. Press the SELECT button and the next screen will display the following:

- Average Fuel Economy/Miles Per Gallon
- Distance To Empty (DTE)
- Miles Per Gallon (MPG)

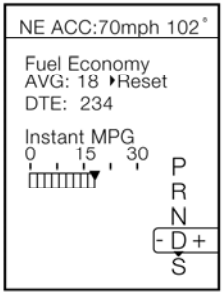

041068186

Fuel Economy

Average Fuel Economy / ECO Fuel Saver Mode — If Equipped

Shows the average fuel economy since the last reset. When Average Fuel Economy is selected, The word "RESET>" (with right arrow) appears next to it. Pressing the right arrow button will reset Average Fuel Economy

which displays ″0″ immediately after reset. Then, the history information will be erased, and the averaging will continue from the last fuel average reading before the reset.

There is an ECO icon in the lower portion of the EVIC display. This icon will appear whenever the Multi-Displacement System (MDS) (if equipped) allows the engine to operate on four cylinders, or if you are driving in a fuel efficient manner.

This feature allows you to monitor when you are driving in a fuel efficient manner, and it can be used to modify driving habits in order to increase fuel economy. Press the BACK button to return to the main menu.

Distance To Empty (DTE)

Shows the estimated distance that can be traveled with the fuel remaining in the tank. This estimated distance is determined by a weighted average of the instantaneous and average fuel economy, according to the current fuel tank level. DTE cannot be reset through the SELECT button.

NOTE: Significant changes in driving style or vehicle loading will greatly affect the actual drivable distance of the vehicle, regardless of the DTE displayed value.

When the DTE value is less than 30 miles (48 km) estimated driving distance, the DTE display will change to a “LOW FUEL” message. This display will continue until the vehicle runs out of fuel. Adding a significant amount of fuel to the vehicle will turn off the “LOW FUEL” message and a new DTE value will display. Press the BACK button to return to the main menu.

Miles Per Gallon (MPG)

The Miles Per Gallon (MPG) feature displays instantaneous fuel economy in a bar graph below the DTE, this function cannot be reset. Press the BACK button to return to the main menu.

Cruise Control

Press and release the UP or DOWN button until "ACC" (if equipped with Adaptive Cruise Control) or "Cruise" is highlighted in the EVIC. Status of the ACC or Cruise is displayed in the menu line also. Press and release the SELECT (right arrow) button to display the following information:

- If equipped with ACC, one of several messages will be displayed giving a dynamic update of the status of the feature as the driver changes feature status or following conditions change. If ACC is active and a warning or other feature is in the EVIC main display, the ACC status will be displayed in place of the EVIC odometer line.
- For vehicles with Cruise, one of several messages will be displayed giving a dynamic update of the status of the feature as the driver changes feature status or conditions change. If Cruise is active and a warning or other feature is in the EVIC main display, the Cruise status will be displayed in place of the EVIC odometer line.

Press and release the BACK button to return to the main menu.

Vehicle Speed

Press and release the UP or DOWN button until "Vehicle Speed" is highlighted in the EVIC. Press the SELECT button to view a digital display of the current speed in mph or km/h. Pressing the SELECT button a second time will toggle the unit of measure between mph or km/h. Press the BACK button to return to the main menu.

NOTE: Changing the unit of measure in the Vehicle Speed menu will not change the unit of measure in the EVIC.

Trip Info

Press and release the UP or DOWN button until "Trip Info" is highlighted in the EVIC. Press and release the SELECT button to display the following three trip features in the next screen:

- Trip A
- Trip B
- Elapsed Time

Press the UP/DOWN buttons to cycle through all the Trip Computer functions or press the BACK button to return to the main menu.

The Trip Functions mode displays the following information:

Trip A
Shows the total distance traveled for Trip A since the last reset.

Trip B
Shows the total distance traveled for Trip B since the last reset.

Elapsed Time
Shows the total elapsed time of travel since the last reset. Elapsed time will increment when the ignition is in the ON or START position.

Resetting A Trip Info Function
To Reset any of the three Trip Info functions, select the function you want to reset using the UP or DOWN buttons. Push the SELECT button until the feature displays zero.

Tire PSI

Press and release the UP or DOWN button until "Tire PSI" is highlighted in the EVIC. Press and release the SELECT button and one of the following will be displayed:

- If tire pressure is OK for all tires a vehicle ICON is displayed with tire pressure values in each corner of the ICON.
- If one or more tires have low pressure, "Tire Pressure LOW" is displayed with the vehicle ICON and the tire pressure values in each corner of the ICON.
- If the Tire Pressure system requires service, "Service Tire Pressure System" is displayed.

Tire PSI is an information only function and cannot be reset. Press and release the BACK button to return to the main menu.

Vehicle Info (Customer Information Features)

Press and release the UP or DOWN button until "Vehicle Info" is highlighted in the EVIC. Press and release the SELECT button and Coolant Temp will be displayed. Press the UP or DOWN button to scroll through the following information displays.

- ***Coolant Temp***

Displays the actual coolant temperature.

- ***AWD Status — If Equipped***

Displays a vehicle ICON with four wheels highlighted and "AWD" if All Wheel Drive is active. Displays a vehicle ICON with two wheels highlighted and "RWD" if All Wheel Drive is inactive.

- ***Oil Temperature***

Displays the actual oil temperature.

- ***Oil Pressure***

Displays the actual oil pressure.

- *Trans Temperature*

Displays the actual transmission temperature.

- *Engine Hours*

Displays the number of hours of engine operation.

Messages

Select from Main Menu using the UP or DOWN buttons. This feature shows the number of stored warning messages (in the # place holder). Pressing the SELECT button will allow you to see what the stored messages are. Pressing the BACK button takes you back to the Main Menu.

Turn Menu OFF

Select from Main Menu using the DOWN button. Pressing the SELECT button blanks the menu display. Pressing any one of the four steering wheel buttons brings the menu back.

Uconnect Touch™ SETTINGS

The Uconnect Touch™ system uses a combination of soft and hard keys located on the center of the instrument panel that allows you to access and change the customer programmable features.

Hard-Keys

Hard-Keys are located below the Uconnect Touch™ system in the center of the instrument panel. In addition, there is a Scroll/Enter control knob located on the right side of the Climate Controls in the center of the instrument panel. Turn the control knob to scroll through menus and change settings (i.e., 30, 60, 90), press the center of the control knob one or more times to select or change a setting (i.e., ON, OFF).

Soft-Keys

Soft-Keys are accessible on the Uconnect Touch™ display.

Customer Programmable Features — Uconnect Touch™ 4.3 Settings (If Equipped)

In this mode the Uconnect Touch™ system allows you to access programmable features that may be equipped such as Display, Clock, Safety/Assistance, Lights, Doors & Locks, Heated Seats, Engine Off Operation, Compass Settings, Audio, Phone/Bluetooth and SIRIUS Setup through hard-keys and soft-keys.

NOTE: Only one touchscreen area may be selected at a time.

Press the "Settings" hard-key to access the Settings screen, use the Page Up/Down soft-keys to scroll through the following settings. Touch the desired setting soft key to change the setting using the description shown on the following pages for each setting

044336083

1 — Uconnect Touch™ 4.3 Settings Hard-Key

Uconnect Touch™ 4.3 Soft-Keys

Display

- *Brightness*

Touch the Brightness soft-key to change this display. When in this display, you may select display brightness with the headlights on and the headlights off. Adjust the brightness with the + and – setting soft-keys or by selecting any point on the scale between the + and – soft-keys. Then touch the arrow back soft-key.

- *Mode*

Touch the Mode soft-key to change this display. When in this display, you may select one of the auto display settings. To change Mode status press and release the Day, Night or Auto soft-key, then by touch the arrow back soft-key.

- *Language*

Touch the Language soft-key to change this display. When in this display, you may select one of three languages for all display nomenclature, including the trip functions and the navigation system (if equipped). Touch the English, French (Français) or Spanish (Español) soft-key to select the language preferred. Then touch the arrow back soft-key. As you continue, the information will display in the selected language.

- *Units*

Touch the Units soft-key to change this display. When in this display, you may switch the EVIC, odometer, and navigation system (if equipped) between US and Metric units of measure. Touch US or Metric then touch the arrow back soft-key. As you continue, the information will display in the selected units of measure.

- *Voice Response*

Touch the Voice Response soft-key to change the Voice Response Length settings. To change the Voice Response Length, press and release the Brief or Long soft-key. Then touch the arrow back soft-key.

- *Touch Screen Beep*

Touch the Touch Screen Beep soft-key to turn on or shut off the sound heard when a touch screen button (soft-key) is pressed. To change the Touch Screen Beep setting press and release the ON or OFF soft-key, then touch the arrow back soft-key.

- *Fuel Saver Display*

Touch the Fuel Saver Display soft-key to turn the "ECO" message (located in the instrument cluster display) on or off. To make your selection, touch the Fuel Saver Display soft-key and select ON or OFF. Then touch the arrow back soft-key.

Clock

- *Set Time*

Touch the Set Time soft-key to change this display. When in this display, you may select the time display settings. To make your selection, touch the Set Time soft-key, adjust the hours and minutes using the up and down soft-keys, select AM or PM, select 12 hr or 24 hr. Then touch the arrow back soft-key when all selections are complete.

- *Show Time Status*

Touch the Show Time Status soft-key to change this display. When in this display, you may turn on or shut off

the digital clock in the status bar. To change the Show Time Status setting, press and release the ON or OFF soft-key. Then touch the arrow back soft-key.

- *Sync Time*

Touch the Sync Time soft-key to change this display. When in this display, you may have the radio set the time automatically. To change the Sync Time setting, press and release the ON or OFF soft-key. Then touch the arrow back soft-key.

Safety / Assistance

- *Front Collision Warning — If Equipped*

Touch the Front Collision Warning soft-key to change this display. The Front Collision Warning (FCW) feature can be can be set to Far, set to Near or turned Off. The default status of FCW is the Far setting. This means the system will warn you of a possible collision with the vehicle in front of you when you are farther away. This gives you the most reaction time. To change the setting for more dynamic driving, select the Near setting. This warns you of a possible collision when you are much closer to the vehicle in front of you. This allows for a more dynamic driving experience. To change the FCW status, press and release the OFF, Near or Far button. Then touch the arrow back soft-key.

For further information, refer to ”Adaptive Cruise Control (ACC)” in “Understanding The Features Of Your Vehicle”.

- *Park Assist*

Touch the Park Assist soft-key to change this display. The Rear Park Assist system will scan for objects behind the vehicle when the transmission shift lever is in REVERSE and the vehicle speed is less than 11 mph (18 km/h). The system can be enabled with Sound Only, Sound and Display, or turned OFF. To change the Park Assist status, press and release the OFF, Sound Only or Sounds and Display soft-key. Then touch the arrow back soft-key.

Refer to “ParkSense® Rear Park Assist” in “Understanding The Features Of Your Vehicle” for system function and operating information.

- ***Tilt Mirrors In Reverse***

Touch the Tilt Mirrors In Reverse soft-key to change this display. When this feature is selected, the outside rear-view mirrors will tilt downward when the ignition is in the RUN position and the transmission shift lever is in the REVERSE position. The mirrors will move back to their previous position when the transmission is shifted out of REVERSE. To make your selection, touch the Tilt Mirrors In Reverse soft-key and select ON or OFF. Then touch the arrow back soft-key.

- ***Blind Spot Alert***

Touch the Blind Spot Alert soft-key to change this display. When this feature is selected, the Blind Spot Alert feature can be set to Off, Lights or Lights and Chime. The Blind Spot Alert feature can be activated in “Lights” mode. When this mode is selected, the Blind Spot Monitor (BSM) system is activated and will only show a visual alert in the outside mirrors. When “Lights & Chime” mode is activated, the Blind Spot Monitor (BSM) will show a visual alert in the outside mirrors as well as an audible alert when the turn signal is on. When “Off” is selected, the Blind Spot Monitor (BSM) system is deactivated. To change the Blind Spot Alert status, touch the OFF, Lights or Lights & Chime soft-key. Then touch the arrow back soft-key.

NOTE: If your vehicle has experienced any damage in the area where the sensor is located, even if the fascia is not damaged, the sensor may have become misaligned. Take your vehicle to an authorized dealer to verify sensor alignment. Having a sensor that is misaligned will result in the BSM not operating to specification.

- *Rain Sensing*

Touch the Rain Sensing soft-key to change this display. When this feature is selected, the system will automatically activate the windshield wipers if it senses moisture on the windshield. To make your selection, touch the Rain Sensing soft-key and select ON or OFF. Then touch the arrow back soft-key.

- *Hill Start Assist — If Equipped*

Touch the Hill Start Assist soft-key to change this display. When this feature is selected, the Hill Start Assist (HSA) system is active. Refer to "Electronic Brake Control System" in "Starting And Operating" for system function and operating information. To make your selection, touch the Hill Start Assist soft-key and select ON or OFF. Then touch the arrow back soft-key.

Lights

- *Illuminated Approach*

Touch the Illuminated Approach soft-key to change this display. When this feature is selected, the headlights will activate and remain on for 0, 30, 60, or 90 seconds when the doors are unlocked with the Remote Keyless Entry (RKE) transmitter. To change the Illuminated Approach status, touch the 0, 30, 60 or 90 soft-key. Then touch the arrow back soft-key.

- *Headlights With Wipers*

Touch the Headlights With Wipers soft-key to change this display. When this feature is selected, and the headlight switch is in the AUTO position, the headlights will turn on approximately 10 seconds after the wipers are turned on. The headlights will also turn off when the wipers are turned off if they were turned on by this feature. To make your selection, touch the Headlights With Wipers soft-key and select ON or OFF. Then touch the arrow back soft-key.

- ***Auto High Beams "SmartBeam™"***

Touch the Auto High Beams soft-key to change this display. When this feature is selected, the high beam headlights will deactivate automatically under certain conditions. To make your selection, touch the Auto High Beams soft-key and select ON or OFF. Then touch the arrow back soft-key. Refer to "Lights/SmartBeam™ — If Equipped" in "Understanding The Features Of Your Vehicle" for further information.

- ***Daytime Running Lights***

Touch the Daytime Running Lights soft-key to change this display. When this feature is selected, the headlights will turn on whenever the engine is running. To make your selection, touch the Daytime Running Lights soft-key and select ON or OFF. Then touch the arrow back soft-key.

- ***Steering Directed Lights***

Touch the Steering Directed Lights soft-key to change this display. When this feature is selected, the headlights turn relative to a change in direction of the steering wheel. To make your selection, touch the Steering Directed Lights soft-key and select ON or OFF. Then touch the arrow back soft-key.

- ***Flash Headlights With Lock***

Touch the Flash Headlights With Lock soft-key to change this display. When this feature is selected, the headlights will flash when the doors are locked or unlocked with the Remote Keyless Entry (RKE) transmitter. This feature may be selected with or without the sound horn on lock feature selected. To make your selection, touch the Flash Headlights With Lock soft-key and select ON or OFF. Then touch the arrow back soft-key.

Doors & Locks

- ***Auto Unlock On Exit***

Touch the Auto Unlock On Exit soft-key to change this display. When this feature is selected, all doors will unlock when the vehicle is stopped and the transmission is in the PARK or NEUTRAL position and the driver's door is opened. To make your selection, touch the Auto Unlock On Exit soft-key and select ON or OFF. Then touch the arrow back soft-key.

- ***Flash Lights With Lock***

Touch the Flash Lights With Lock soft-key to change this display. When this feature is selected, the front and rear turn signals will flash when the doors are locked or unlocked with the Remote Keyless Entry (RKE) transmitter. To make your selection, touch the Flash Lights With Lock soft-key and select ON or OFF. Then touch the arrow back soft-key.

- ***Sound Horn With Remote Start***

Touch the Sound Horn With Remote Start soft-key to change this display. When this feature is selected, the horn will sound when the remote start is activated. To make your selection, touch the Sound Horn With Remote Start soft-key and select ON or OFF. Then touch the arrow back soft-key.

- ***Sound Horn With Lock***

Touch the Sounds Horn With Lock soft-key to change this display. When this feature is selected, the horn will chirp when the doors are locked or unlocked with the Remote Keyless Entry (RKE) transmitter. To make your selection, touch the Sound Horn With Lock soft-key and select ON or OFF. Then touch the arrow back soft-key.

- *Remote Door Unlock Order*

Touch the Remote Door Unlock Order soft-key to change this display. When Unlock Driver Door Only On 1st Press is selected, only the driver's door will unlock on the first press of the Remote Keyless Entry (RKE) transmitter UNLOCK button. When Unlock Driver Door Only On 1st Press is selected, you must press the RKE transmitter UNLOCK button twice to unlock the passenger's doors. When Unlock All Doors On 1st Press is selected, all of the doors will unlock on the first press of the RKE transmitter UNLOCK button.

NOTE: If the vehicle is equipped with Keyless Enter-N-Go (Passive Entry) and the EVIC is programmed to Unlock All Doors On 1st Press, all doors will unlock no matter which Passive Entry equipped door handle is grasped. If Unlock Driver Door Only On 1st Press is programmed, only the driver's door will unlock when the driver's door is grasped. With Passive Entry, if Unlock Driver Door Only On 1st Press is programmed, touching the handle more than once will only result in the driver's door opening. If Unlock Driver Door Only On 1st Press is selected, once the driver door is opened, the interior door lock/unlock switch can be used to unlock all the doors (or use the RKE transmitter).

- *Memory Linked to FOB*

Touch the Memory Linked to FOB soft-key to change this display. This feature provides automatic driver seat positioning to enhance driver mobility when entering and exiting the vehicle, driver 1 and driver 2 last mode, settings and presets. To make your selection, touch the Memory Linked to FOB soft-key and select ON or OFF. Then touch the arrow back soft-key.

NOTE: The seat will return to the memorized seat location (if Recall Memory with Remote Key Unlock is set to ON) when the RKE transmitter is used to unlock the door. Refer to "Driver Memory Seat" in "Understanding The Features Of Your Vehicle" for further information.

- *Passive Entry (Keyless Enter-N-Go)*

Touch the Passive Entry soft-key to change this display. This feature allows you to lock and unlock the vehicle's door(s) without having to press the RKE transmitter lock or unlock buttons. To make your selection, touch the Passive Entry soft-key and select ON or OFF. Then touch the arrow back soft-key. Refer to "Keyless Enter-N-Go" in "Things To Know Before Starting Your Vehicle".

Heated Seats

- *Auto Heated Seats*

Touch the Auto Heated Seats soft-key to change this display. When this feature is selected, the driver's heated seat will automatically turn on when temperatures are below 40° F (4.4° C). To make your selection, touch the Auto Heated Seats soft-key and select ON or OFF. Then touch the arrow back soft-key.

Engine Off Options

- *Easy Exit Seats — If Equipped*

Touch the Easy Exit Seats soft-key to change this display. This feature provides automatic driver seat positioning to enhance driver mobility when entering and exiting the vehicle. To make your selection, touch the Easy Exit Seats soft-key, and select ON or OFF. Then touch the arrow back soft-key. Refer to "Driver Memory Seat" in "Understanding The Features Of Your Vehicle" for further information.

- *Headlight Off Delay*

Touch the Headlight Off Delay soft-key to change this display. When this feature is selected, the driver can choose to have the headlights remain on for 0, 30, 60, or 90 seconds when exiting the vehicle. To change the Headlight Off Delay status, touch the 0, 30, 60 or 90 soft-key. Then touch the arrow back soft-key.

- *Engine Off Power Delay*

Touch the Engine Off Power Delay soft-key to change this display. When this feature is selected, the power window switches, radio, Uconnect™ phone system (if equipped), DVD video system (if equipped), power sunroof (if equipped), and power outlets will remain active for up to 10 minutes after the ignition is cycled to OFF. Opening either front door will cancel this feature. To change the Engine Off Power Delay status, touch the 0 seconds, 45 seconds, 5 minutes or 10 minutes soft-key. Then touch the arrow back soft-key.

Compass Settings

- *Variance*

Touch the Variance soft-key to change this display. Compass Variance is the difference between Magnetic North and Geographic North. To compensate for the differences, the variance should be set for the zone where the vehicle is driven, per the zone map. Once properly set, the compass will automatically compensate for the differences, and provide the most accurate compass heading.

NOTE: Keep magnetic materials away from the top of the instrument panel, such as iPod's, Mobile Phones, Laptops and Radar Detectors. This is where the compass module is located, and it can cause interference with the compass sensor, and it may give false readings.

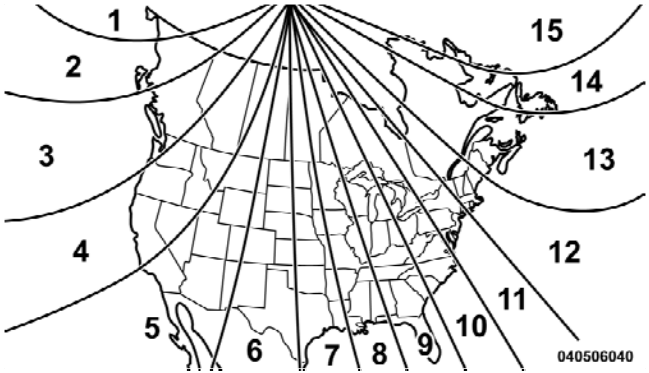

Compass Variance Map

- *Calibration*

Touch the Calibration soft-key to change this setting. This compass is self-calibrating, which eliminates the need to manually reset the compass. When the vehicle is new, the compass may appear erratic and the EVIC will display CAL until the compass is calibrated. You may also calibrate the compass by touching the ON soft-key and completing one or more 360-degree turns (in an area free from large metal or metallic objects) until the CAL indicator displayed in the EVIC turns off. The compass will now function normally.

NOTE: A good calibration requires a level surface and an environment free from large metallic objects such as buildings, bridges, underground cables, railroad tracks, etc.

Audio

- ***Equalizer***

Touch the Equalizer soft-key to change this display. When in this display, you may adjust the Bass, Mid and Treble settings. Adjust the settings with the + and – setting soft-keys or by selecting any point on the scale between the + and – soft-keys. Then touch the arrow back soft-key.

NOTE: Bass/Mid/Treble allow you to simply slide your finger up or down to change the setting as well as press directly on the desired setting.

- ***Balance / Fade***

Touch the Balance / Fade soft-key to change this display. When in this display, you may adjust the Balance and Fade settings.

- ***Speed Adjusted Volume***

Touch the Speed Adjusted Volume soft-key to change this display. This feature increases or decreases volume relative to vehicle speed. To change the Speed Adjusted Volume, press the OFF, 1, 2 or 3 soft-key. Then touch the arrow back soft-key.

- ***Surround Sound***

Touch the Surround Sound soft-key to change this display. This feature provides simulated surround sound mode. To make your selection, press the Surround Sound soft-key and select ON or OFF. Then touch the arrow back soft-key.

Phone / Bluetooth

- ***Paired Devices***

This feature shows which phones are paired to the Phone/Bluetooth system. For further information, refer to the Uconnect Touch™ Supplement.

SIRIUS Setup

- *Channel Skip*

SIRIUS can be programmed to designate a group of channels that are the most desirable to listen to or to exclude undesirable channels while scanning. To make your selection, touch the Channel Skip soft-key, select the channels you would like to skip. Then touch the arrow back soft-key.

- *Subscription Info*

New vehicle purchasers or lessees will receive a free limited time subscription to SIRIUS Satellite Radio with your radio. Following the expiration of the free services, it will be necessary to access the information on the Subscription Information screen in order to re-subscribe.

Touch the Subscription Info soft-key to access the Subscription Information screen.

Write down the SIRIUS ID numbers for your receiver. To reactivate your service, either call the number listed on the screen or visit the provider online.

NOTE: SIRIUS Travel Link is a separate subscription.

Customer Programmable Features — Uconnect Touch™ System 8.4 Settings (If Equipped)

Press the More soft-key, then press the Settings soft-key to display the menu setting screen. In this mode the Uconnect Touch™ system allows you to access programmable features that may be equipped such as Display, Clock, Safety/Assistance, Lights, Doors & Locks, Auto-On Comfort & Remote Start, Engine Off Operation, Compass Settings, Audio, Phone/Bluetooth and SIRIUS Setup.

NOTE: Only one touchscreen area may be selected at a time.

Uconnect Touch™ 8.4 Soft-Keys

When making a selection, press the soft-key to enter the desired mode. Once in the desired mode press and release the preferred setting until a check-mark appears next to the setting, showing that setting has been selected.

Once the setting is complete press the Back Arrow soft-key to return to the previous menu or press the X soft-key to close out of the settings screen. Pressing the Up or Down Arrow soft-keys on the right side of the screen will allow you to toggle up or down through the available settings.

Display

After pressing the Display soft-key the following settings will be available.

- ***Display Mode***

When in this display you may select one of the auto display settings. To change Mode status, touch and release the Day, Night or Auto soft-key. Then touch the arrow back soft-key.

- ***Display Brightness With Headlights ON***

When in this display, you may select the brightness with the headlights on. Adjust the brightness with the + and –

setting soft-keys or by selecting any point on the scale between the + and – soft-keys. Then touch the arrow back soft-key.

- *Display Brightness With Headlights OFF*

When in this display, you may select the brightness with the headlights off. Adjust the brightness with the + and – setting soft-keys or by selecting any point on the scale between the + and – soft-keys. Then touch the arrow back soft-key.

- *Set Language*

When in this display, you may select one of three languages for all display nomenclature, including the trip functions and the navigation system (if equipped). Touch the Set Language soft-key and then touch the desired language soft-key until a check-mark appears next to the language, showing that setting has been selected. Touch the back arrow soft-key to return to the previous menu.

- *Units*

When in this display, you may select to have the EVIC, odometer, and navigation system (if equipped) changed between US and Metric units of measure. Touch US or Metric until a check-mark appears next to the setting, showing that setting has been selected. Touch the back arrow soft-key to return to the previous menu.

- *Voice Response Length*

When in this display, you may change the Voice Response Length settings. To change the Voice Response Length, touch the Brief or Detailed soft-key until a check-mark appears next to the setting, showing that setting has been selected. Touch the back arrow soft-key to return to the previous menu.

- *Touchscreen Beep*

When in this display, you may turn on or shut off the sound heard when a touch screen button (soft-key) is pressed. Touch the Touchscreen Beep soft-key until a

check-mark appears next to the setting, showing that setting has been selected. Touch the back arrow soft-key to return to the previous menu.

- *Navigation Turn-By-Turn In Cluster*

When this feature is selected, the turn-by-turn directions will appear in the display as the vehicle approaches a designated turn within a programmed route. To make your selection, touch the Navigation Turn-By-Turn In Cluster soft-key, until a check-mark appears next to the setting, showing that setting has been selected. Touch the back arrow soft-key to return to the previous menu.

- *Fuel Saver Display In Cluster*

The "ECO" message is located in the instrument cluster display, this message can be turned on or off. To make your selection, touch the Fuel Saver Display soft-key, until a check-mark appears next to the setting, showing that setting has been selected. Touch the back arrow soft-key to return to the previous menu.

Clock

After pressing the Clock soft-key the following settings will be available.

- *Sync Time With GPS*

When in this display, you may automatically have the radio set the time. To change the Sync Time setting touch the Sync with GPS Time soft-key until a check-mark appears next to the setting, showing that setting has been selected. Touch the back arrow soft-key to return to the previous menu.

- *Set Time Hours*

When in this display, you may adjust the hours. The Sync with GPS Time soft-key must be unchecked. To make your selection touch the + or - soft-keys to adjust the hours up or down. Touch the back arrow soft-key to return to the previous menu or touch the X soft-key to close out of the settings screen.

- *Set Time Minutes*

When in this display, you may adjust the minutes. The Sync with GPS Time soft-key must be unchecked. To make your selection touch the + or - soft-keys to adjust the minutes up or down. Touch the back arrow soft-key to return to the previous menu or touch the X soft-key to close out of the settings screen.

- *Time Format*

When in this display, you may select the time format display setting. Touch the Time Format soft-key until a check-mark appears next to the 12hrs or 24hrs setting, showing that setting has been selected. Touch the back arrow soft-key to return to the previous menu.

- *Show Time In Status Bar*

When in this display, you may turn on or shut off the digital clock in the status bar. To change the Show Time Status setting touch the Show Time in Status Bar soft-key until a check-mark appears next to setting, showing that setting has been selected. Touch the back arrow soft-key to return to the previous menu.

Safety / Assistance

After pressing the Safety / Assistance soft-key the following settings will be available.

- *Front Collision Sensitivity — If Equipped*

The Front Collision Warning (FCW) feature can be can be set to Far, set to Near or turned Off. The default status of FCW is the Far setting. This means the system will warn you of a possible collision with the vehicle in front of you when you are farther away. This gives you the most reaction time. To change the setting for more dynamic driving, select the Near setting. This warns you of a possible collision when you are much closer to the vehicle in front of you. This allows for a more dynamic

driving experience. To change the FCW status, touch and release the OFF, Near or Far button. Then touch the arrow back soft-key.

For further information, refer to "Adaptive Cruise Control (ACC)" in "Understanding The Features Of Your Vehicle".

- ***Park Assist***

The Rear Park Assist system will scan for objects behind the vehicle when the transmission shift lever is in REVERSE and the vehicle speed is less than 11 mph (18 km/h). The system can be enabled with Sound Only, Sound and Display, or turned OFF. To change the Park Assist status, touch and release the OFF, Sound Only or Sounds and Display button. Then touch the arrow back soft-key. Refer to "ParkSense® Rear Park Assist" in "Understanding The Features Of Your Vehicle" for system function and operating information.

- ***Tilt Mirrors In Reverse***

When this feature is selected, the outside sideview mirrors will tilt downward when the ignition is in the RUN position and the transmission shift lever is in the REVERSE position. The mirrors will move back to their previous position when the transmission is shifted out of REVERSE. To make your selection, touch the Tilt Mirrors In Reverse soft-key, until a check-mark appears next to setting, showing that setting has been selected. Touch the back arrow soft-key to return to the previous menu.

- ***Blind Spot Alert***

When this feature is selected, the Blind Spot Alert feature can be set to Off, Lights or Lights and Chime. The Blind Spot Alert feature can be activated in "Lights" mode. When this mode is selected, the Blind Spot Monitor (BSM) system is activated and will only show a visual alert in the outside mirrors. When "Lights & Chime" mode is activated, the Blind Spot Monitor (BSM) will show a visual alert in the outside mirrors as well as an

audible alert when the turn signal is on. When "Off" is selected, the Blind Spot Monitor (BSM) system is deactivated. To change the Blind Spot Alert status, touch the Off, Lights or Lights & Chime soft-key. Then touch the arrow back soft-key.

NOTE: If your vehicle has experienced any damage in the area where the sensor is located, even if the fascia is not damaged, the sensor may have become misaligned. Take your vehicle to an authorized dealer to verify sensor alignment. Having a sensor that is misaligned will result in the BSM not operating to specification.

- ***ParkView® Backup Camera***

Your vehicle may be equipped with the ParkView® Rear Back Up Camera that allows you to see an on-screen image of the rear surroundings of your vehicle whenever the shift lever is put into REVERSE. The image will be displayed on the radio touchscreen display along with a caution note to "check entire surroundings" across the top of the screen. After five seconds, this note will disappear. The ParkView® camera is located on the rear of the vehicle above the rear License plate. To make your selection, touch the ParkView® Backup Camera soft-key, until a check-mark appears next to setting, showing that setting has been selected. Touch the back arrow soft-key to return to the previous menu.

- ***Rain Sensing Auto Wipers***

When this feature is selected, the system will automatically activate the windshield wipers if it senses moisture on the windshield. To make your selection, touch the Rain Sensing soft-key, until a check-mark appears next to setting, showing that setting has been selected. Touch the back arrow soft-key to return to the previous menu.

- ***Hill Start Assist — If Equipped***

When this feature is selected, the Hill Start Assist (HSA) system is active. Refer to "Electronic Brake Control System" in "Starting And Operating" for system function

and operating information. To make your selection, touch the Hill Start Assist soft-key, until a check-mark appears next to setting, showing that setting has been selected. Touch the back arrow soft-key to return to the previous menu.

Lights

After pressing the Lights soft-key the following settings will be available.

- ***Headlight Illumination On Approach***

When this feature is selected, the headlights will activate and remain on for 0, 30, 60, or 90 seconds when the doors are unlocked with the Remote Keyless Entry (RKE) transmitter. To change the Illuminated Approach status, touch the + or - soft-key to select your desired time interval. Touch the back arrow soft-key to return to the previous menu.

- ***Headlights With Wipers — If Equipped***

When this feature is selected, and the headlight switch is in the AUTO position, the headlights will turn on approximately 10 seconds after the wipers are turned on. The headlights will also turn off when the wipers are turned off if they were turned on by this feature. To make your selection, touch the Headlights With Wipers soft-key, until a check-mark appears next to setting, showing that setting has been selected. Touch the back arrow soft-key to return to the previous menu.

- ***Auto Dim High Beams "SmartBeam™" — If Equipped***

When this feature is selected, the high beam headlights will deactivate automatically under certain conditions. To make your selection, touch the Auto High Beams soft-key, until a check-mark appears next to setting, showing that setting has been selected. Touch the back arrow soft-key to return to the previous menu. Refer to "Lights/ SmartBeam™ — If Equipped" in "Understanding The Features Of Your Vehicle" for further information.

- *Daytime Running Lights*

When this feature is selected, the headlights will turn on whenever the engine is running. To make your selection, touch the Daytime Running Lights soft-key, until a check-mark appears next to setting, showing that setting has been selected. Touch the back arrow soft-key to return to the previous menu.

- *Steering Directed Lights*

When this feature is selected, the headlights turn relative to a change in direction of the steering wheel. To make your selection, touch the Steering Directed Lights soft-key, until a check-mark appears next to setting, showing that setting has been selected. Touch the back arrow soft-key to return to the previous menu.

- *Flash Headlights With Lock*

When this feature is selected, the headlights will flash when the doors are locked or unlocked with the Remote Keyless Entry (RKE) transmitter. This feature may be selected with or without the sound horn on lock feature selected. To make your selection, touch the Flash Headlights with Lock soft-key, until a check-mark appears next to setting, showing that setting has been selected. Touch the back arrow soft-key to return to the previous menu.

Doors & Locks

After pressing the Doors & Locks soft-key the following settings will be available.

- *Auto Unlock On Exit*

When this feature is selected, all doors will unlock when the vehicle is stopped and the transmission is in the PARK or NEUTRAL position and the driver's door is opened. To make your selection, touch the Auto Unlock On Exit soft-key, until a check-mark appears next to setting, showing that setting has been selected. Touch the back arrow soft-key to return to the previous menu.

- ***Flash Headlight With Lock***

When this feature is selected, the front and headlights will flash when the doors are locked or unlocked with the Remote Keyless Entry (RKE) transmitter. To make your selection, touch the Flash Lights With Lock soft-key, until a check-mark appears next to setting, showing that setting has been selected. Touch the back arrow soft-key to return to the previous menu.

- ***Sound Horn With Lock***

When this feature is selected, the horn will sound when the remote start is activated. To make your selection, touch the Sound Horn With Lock soft-key, until a check-mark appears next to setting, showing that setting has been selected. Touch the back arrow soft-key to return to the previous menu.

- ***Sound Horn With Remote Start***

When this feature is selected, the horn will sound when the remote start is activated. To make your selection, touch the Sound Horn With Remote Start soft-key, until a check-mark appears next to setting, showing that setting has been selected. Touch the back arrow soft-key to return to the previous menu.

- ***1st Press Of Key Fob Unlocks***

When Driver Door is selected, only the driver's door will unlock on the first press of the Remote Keyless Entry (RKE) transmitter UNLOCK button. When Driver Door is selected, you must press the RKE transmitter UNLOCK button twice to unlock the passenger's doors. When All Doors is selected, all of the doors will unlock on the first press of the RKE transmitter UNLOCK button.

NOTE: If the vehicle is programmed to All Doors, all doors will unlock no matter which Passive Entry equipped door handle is grasped. If Driver Door is programmed, only the driver's door will unlock when the driver's door is grasped. With Passive Entry, if Driver Door is programmed touching the handle more than once

will only result in the driver's door unlocking. If Driver Door is selected, once the driver door is opened, the interior door lock/unlock switch can be used to unlock all doors (or use RKE transmitter).

- ***Passive Entry***

This feature allows you to lock and unlock the vehicle's door(s) without having to press the Remote Keyless Entry (RKE) transmitter lock or unlock buttons. To make your selection, touch the Passive Entry soft-key, until a check-mark appears next to setting, showing that setting has been selected. Touch the back arrow soft-key to return to the previous menu. Refer to "Keyless Enter-N-Go" in "Things To Know Before Starting Your Vehicle".

- ***Personal Settings Linked To FOB — If Equipped***

This feature provides automatic driver seat positioning to enhance driver mobility when entering and exiting the vehicle. To make your selection, touch the Memory Linked To FOB soft-key, until a check-mark appears next to setting, showing that setting has been selected. Touch the back arrow soft-key to return to the previous menu.

NOTE: The seat will return to the memorized seat location (if Recall Memory with Remote Key Unlock is set to ON) when the Remote Keyless Entry (RKE) transmitter is used to unlock the door. Refer to "Driver Memory Seat" in "Understanding The Features Of Your Vehicle" for further information.

Auto-On Comfort & Remote Start

After pressing the Auto-On Comfort & Remote Start soft-key the following settings will be available.

- ***Horn With Remote Start***

When this feature is selected, the horn will sound when the remote start is activated. To make your selection, touch the Sound Horn With Remote Start soft-key, until a check-mark appears next to setting, showing that setting has been selected. Touch the back arrow soft-key to return to the previous menu.

- *Auto-On Driver Heated/Ventilated Seat & Steering Wheel With Vehicle Start — If Equipped*

When this feature is selected the driver's heated seat and heated steering wheel will automatically turn on when temperatures are below 40° F (4.4° C). When temperatures are above 80° F (26.7° C) the driver vented seat will turn on. To make your selection, touch the Auto Heated Seats soft-key, until a check-mark appears next to setting, showing that setting has been selected. Touch the back arrow soft-key to return to the previous menu.

Engine Off Options

After pressing the Engine Off Options soft-key the following settings will be available.

- *Easy Exit Seat*

This feature provides automatic driver seat positioning to enhance driver mobility when entering and exiting the vehicle. To make your selection, touch the Easy Exit Seats soft-key, until a check-mark appears next to setting, showing that setting has been selected. Touch the back arrow soft-key to return to the previous menu.

- *Engine Off Power Delay*

When this feature is selected, the power window switches, radio, Uconnect™ phone system (if equipped), DVD video system (if equipped), power sunroof (if equipped), and power outlets will remain active for up to 10 minutes after the ignition is cycled to OFF. Opening either front door will cancel this feature. To change the Engine Off Power Delay status touch the 0 seconds, 45 seconds, 5 minutes or 10 minutes soft-key. Then touch the arrow back soft-key.

- *Headlight Off Delay*

When this feature is selected, the driver can choose to have the headlights remain on for 0, 30, 60, or 90 seconds when exiting the vehicle. To change the Headlight Off Delay status touch the + or - soft-key to select your desired time interval. Touch the back arrow soft-key to return to the previous menu.

Compass Settings

After pressing the Compass Settings soft-key the following settings will be available.

- *Variance*

Compass Variance is the difference between Magnetic North and Geographic North. To compensate for the differences the variance should be set for the zone where the vehicle is driven, per the zone map. Once properly set, the compass will automatically compensate for the differences, and provide the most accurate compass heading.

NOTE: Keep magnetic materials away from the top of the instrument panel, such as iPod's, Mobile Phones, Laptops and Radar Detectors. This is where the compass module is located, and it can cause interference with the compass sensor, and it may give false readings.

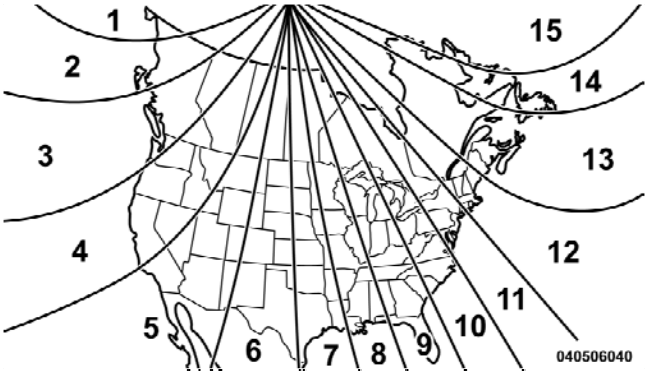

Compass Variance Map

- *Perform Compass Calibration*

Touch the Calibration soft-key to change this setting. This compass is self-calibrating, which eliminates the need to manually reset the compass. When the vehicle is new, the compass may appear erratic and the EVIC will display CAL until the compass is calibrated. You may also

calibrate the compass by pressing the ON soft-key and completing one or more 360-degree turns (in an area free from large metal or metallic objects) until the CAL indicator displayed in the EVIC turns off. The compass will now function normally.

Audio

After pressing the Audio soft-key the following settings will be available.

- ***Balance/Fade***

When in this display you may adjust the Balance and Fade settings.

- ***Equalizer***

When in this display you may adjust the Bass, Mid and Treble settings. Adjust the settings with the + and – setting soft-keys or by selecting any point on the scale between the + and – soft-keys. Then touch the arrow back soft-key.

NOTE: Bass/Mid/Treble allow you to simply slide your finger up or down to change the setting as well as touch directly on the desired setting.

- ***Speed Adjusted Volume***

This feature increases or decreases volume relative to vehicle speed. To change the Speed Adjusted Volume touch the Off, 1, 2 or 3 soft-key. Then touch the arrow back soft-key.

- ***Music Info Cleanup***

This feature helps organize music files for optimized music navigation. To make your selection, touch the Music Info Cleanup soft-key, select On or Off followed by pressing the arrow back soft-key.

- ***Surround Sound***

This feature provides simulated surround sound mode. To make your selection, touch the Surround Sound soft-key, select On or Off followed by pressing the arrow back soft-key.

Phone/Bluetooth

After pressing the Phone/Bluetooth soft-key the following settings will be available.

- *Paired Devices*

This feature shows which phones are paired to the Phone/Bluetooth system. For further information, refer to the Uconnect Touch™ Supplement.

SIRIUS Setup

After pressing the SIRIUS Setup soft-key the following settings will be available.

- *Channel Skip*

SIRIUS can be programmed to designate a group of channels that are the most desirable to listen to or to exclude undesirable channels while scanning. To make your selection, touch the Channel Skip soft-key, select the channels you would like to skip followed by pressing the arrow back soft-key.

- *Subscription Information*

New vehicle purchasers or lessees will receive a free limited time subscription to SIRIUS Satellite Radio with your radio. Following the expiration of the free services, it will be necessary to access the information on the Subscription Information screen in order to re-subscribe.

Touch the Subscription Info soft-key to access the Subscription Information screen.

Write down the SIRIUS ID numbers for your receiver. To reactivate your service, either call the number listed on the screen or visit the provider online.

NOTE: SIRIUS Travel Link is a separate subscription.

SETTING THE ANALOG CLOCK

To set the analog clock at the top center of the instrument panel, press and hold the button until the setting is correct.

Setting The Analog Clock

iPod®/USB/MP3 CONTROL — IF EQUIPPED

This feature allows an iPod® or external USB device to be plugged into the USB port.

iPod® control supports Mini, 4G, Photo, Nano, 5G iPod® and iPhone® devices. Some iPod® software versions may not fully support the iPod® control features. Please visit Apple's website for software updates.

For further information, refer to the Uconnect Touch™ User's Manual.

HARMAN KARDON® Logic7® HIGH PERFORMANCE MULTICHANNEL SURROUND SOUND SYSTEM WITH DRIVER-SELECTABLE SURROUND (DSS) — IF EQUIPPED

Your vehicle is equipped with a Harman Kardon® audio system with GreenEdge™ technology that offers superior sound quality, higher Sound Pressure Levels (SPL) and reduced energy consumption. The new system utilizes

proprietary amplifier and speaker technologies delivering substantial increases in component and system efficiency levels.

The 12 Channel Class D GreenEdge high efficiency amplifier is governed by a high voltage tracking power supply and drives a 7.5-channel playback architecture. The Harman Kardon® audio system offers the ability to choose Logic 7 surround sound for any audio source. The GreenEdge high-efficiency speaker designs ensure the system has higher SPL and a dramatic increase in dynamic sound quality. The speakers are tuned for maximum efficiency and perfectly matched to the amplifier output stage ensuring state of the art multi-seat surround sound processing.

Logic7® multichannel surround-sound technology delivers an immersive, accurate sound-stage to every seating position. This surround effect is available for audio from any source - AM/FM/CD/ Satellite Radio or dashboard AUX input; and is activated through the Uconnect Touch™ System. Refer to "Surround Sound" under "Uconnect Touch™ Settings" in "Understanding Your Instrument Panel".

Selecting "Audio Surround" through the DSS modes activates the Harman Kardon® Logic7® multichannel surround-sound technology in your vehicle. The "Video Surround" mode is described under Driver-Selectable Surround (DSS). The Video Surround Mode will only be available for video media sources (DVDs, Video CDs, or other video media supported by the radio). Some audio will sound better in DSS modes, others in Stereo mode.

When in "Audio Surround" mode, balance is set automatically. Fader control is available in surround mode but should be set to the center position for optimal surround performance.

STEERING WHEEL AUDIO CONTROLS

The remote sound system controls are located on the surface of the steering wheel at the three and nine o'clock positions.

045035585

Remote Sound System Controls (Back View Of Steering Wheel)

The right-hand control is a rocker-type switch with a pushbutton in the center and controls the volume and mode of the sound system. Pressing the top of the rocker switch will increase the volume, and pressing the bottom of the rocker switch will decrease the volume.

Pressing the center button will make the radio switch between the various modes available (AM/FM/CD, etc.).

The left-hand control is a rocker-type switch with a pushbutton in the center. The function of the left-hand control is different depending on which mode you are in.

The following describes the left-hand control operation in each mode.

Radio Operation

Pressing the top of the switch will "Seek" up for the next listenable station and pressing the bottom of the switch will "Seek" down for the next listenable station.

The button located in the center of the left-hand control will tune to the next preset station that you have programmed in the radio preset pushbutton.

CD Player

Pressing the top of the switch once will go to the next track on the CD. Pressing the bottom of the switch once will go to the beginning of the current track, or to the beginning of the previous track if it is within one second after the current track begins to play.

If you press the switch up or down twice, it plays the second track; three times, it will play the third, etc.

The center button on the left side rocker switch has no function for a single-disc CD player. However, when a multiple-disc CD player is equipped on the vehicle, the center button will select the next available CD in the player.

CD/DVD DISC MAINTENANCE

To keep a CD/DVD in good condition, take the following precautions:

1. Handle the disc by its edge; avoid touching the surface.

2. If the disc is stained, clean the surface with a soft cloth, wiping from center to edge.

3. Do not apply paper or tape to the disc; avoid scratching the disc.

4. Do not use solvents such as benzene, thinner, cleaners, or anti-static sprays.

5. Store the disc in its case after playing.

6. Do not expose the disc to direct sunlight.

7. Do not store the disc where temperatures may become too high.

NOTE: If you experience difficulty in playing a particular disc, it may be damaged (i.e., scratched, reflective coating removed, a hair, moisture or dew on the disc) oversized, or have protection encoding. Try a known good disc before considering disc player service.

RADIO OPERATION AND MOBILE PHONES

Under certain conditions, the mobile phone being on in your vehicle can cause erratic or noisy performance from your radio. This condition may be lessened or eliminated by relocating the mobile phone antenna. This condition is not harmful to the radio. If your radio performance does not satisfactorily "clear" by the repositioning of the antenna, it is recommended that the radio volume be turned down or off during mobile phone operation when not using Uconnect™ (if equipped).

CLIMATE CONTROLS

The air conditioning and heating system is designed to make you comfortable in all types of weather. This system can be operated through either the Automatic Climate Controls on the instrument panel or through the Uconnect Touch™ system display.

When the Uconnect Touch™ system is in different modes (Radio, Player, Settings, More, etc.) the driver and passenger temperature settings will be indicated at the top of the display.

General Overview

Hard-Keys

Hard-keys are located on the left and right side of the Uconnect Touch™ 4.3 screen in the center of the instrument panel. There are also hard-keys located below the Uconnect Touch™ screen.

044336084

Uconnect Touch™ System 4.3 — Hard-key (If Equipped)

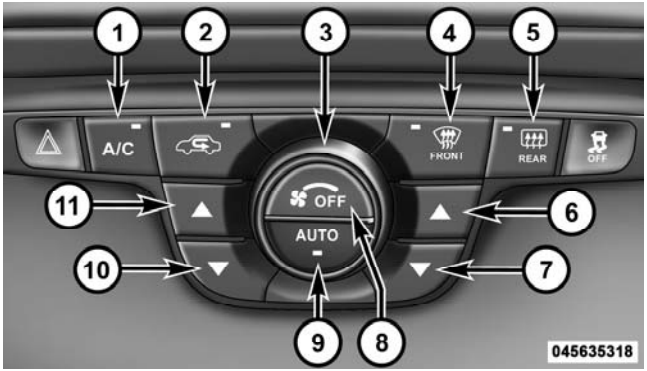

Automatic Climate Controls — Hard-keys (ATC System Shown)

Soft-Keys

Soft-keys are accessible on the Uconnect Touch™ system screen.

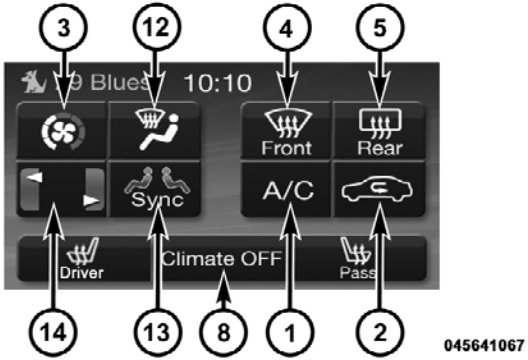

Uconnect Touch™ System 4.3 Manual Temperature Controls — Soft-keys (If Equipped)

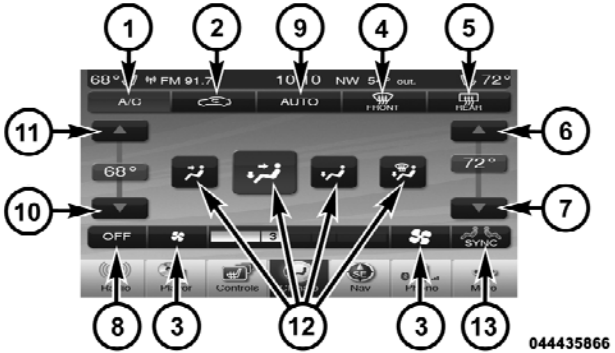

Uconnect Touch™ System 8.4 Automatic Temperature Controls — Soft-keys

Button Descriptions (Applies To Both Hard-keys And Soft-keys)

1. A/C Button

Press and release to change the current Air Conditioning (A/C) setting, the indicator illuminates when A/C is ON.

Performing this function will cause the automatic operation to switch into manual mode and the AUTO indicator will turn off.

2. Recirculation Button
Press and release to change the current setting, the indicator illuminates when ON.

3. Blower Control
Blower control is used to regulate the amount of air forced through the climate system. There are seven blower speeds available. Adjusting the blower will cause automatic mode to switch to manual operation. The speeds can be selected using either hard-keys or soft-keys as follows:

NOTE: For vehicles equipped with Remote Start, the climate controls will not function during Remote Start operation if the blower control is left in the "O" (Off) position. Blower control should be left in the "ON" position to allow the climate control to either warm or cool the vehicle

Hard-key
The blower speed increases as you turn the control clockwise from the lowest blower setting. The blower speed decreases as you turn the knob counter-clockwise.

Soft-key — Uconnect Touch™ System 4.3 (If Equipped)
Press the blower soft-key to enter the blower setting screen. Once in the blower settings screen use the UP and DOWN arrows to adjust the blower speed setting, or directly select the speed setting by pressing the blower bar area around the blower icon. The blower speed increases as you press the UP arrow or move clockwise on the setting scale and decreases when press the DOWN arrow or move counter-clockwise on the setting scale.

Soft-key — Uconnect Touch™ System 8.4
Use the small blower icon to reduce the blower setting and the large blower icon to increase the blower setting. Blower can also be selected by pressing the blower bar area between the icons.

4. Front Defrost Button
Press and release to change the current airflow setting to Defrost mode. The indicator illuminates when this feature is ON. Performing this function will cause the ATC to switch into manual mode. The blower speed may increase when Defrost mode is selected. If the front defrost mode is turned off the climate system will return the previous setting.

5. Rear Defrost Button
Press and release this button to turn on the rear window defroster and the heated outside mirrors (if equipped). An indicator will illuminate when the rear window defroster is on. The rear window defroster automatically turns off after 10 minutes.

CAUTION!

Failure to follow these cautions can cause damage to the heating elements:

- **Use care when washing the inside of the rear window. Do not use abrasive window cleaners on the interior surface of the window. Use a soft cloth and a mild washing solution, wiping parallel to the heating elements. Labels can be peeled off after soaking with warm water.**
- **Do not use scrapers, sharp instruments, or abrasive window cleaners on the interior surface of the window.**
- **Keep all objects a safe distance from the window.**

6. Passenger Temperature Control Up Button
Provides the passenger with independent temperature control. Push the button for warmer temperature settings.

NOTE: Pressing this button while in Sync mode will automatically exit Sync.

7. Passenger Temperature Control Down Button
Provides the passenger with independent temperature control. Push the button for cooler temperature settings.

NOTE: Pressing this button while in Sync mode will automatically exit Sync.

8. Climate Control OFF Button
Press and release this button to turn the Climate Control ON/OFF.

9. AUTO Operation Button
Automatically controls the interior cabin temperature by adjusting airflow distribution and amount. Performing this function will cause the ATC to switch between manual mode and automatic modes. Refer to "Automatic Operation" for more information.

10. Driver Temperature Control Down Button
Provides the driver with independent temperature control. Push the button for cooler temperature settings.

NOTE: In Sync mode, this button will also automatically adjust the passenger temperature setting at the same time.

11. Driver Temperature Control Up Button
Provides the driver with independent temperature control. Push the button for warmer temperature settings.

NOTE: In Sync mode, this button will also automatically adjust the passenger temperature setting at the same time.

12. Modes

The airflow distribution mode can be adjusted so air comes from the instrument panel outlets, floor outlets, demist outlets and defrost outlets. The Mode settings are as follows:

- **Panel Mode**

Air comes from the outlets in the instrument panel. Each of these outlets can be individually adjusted to direct the flow of air. The air vanes of the center outlets and outboard outlets can be moved up and down or side to side to regulate airflow direction. There is a shut off wheel located below the air vanes to shut off or adjust the amount of airflow from these outlets.

- **Bi-Level Mode**

Air comes from the instrument panel outlets and floor outlets. A slight amount of air is directed through the defrost and side window demister outlets.

NOTE: BI-LEVEL mode is designed under comfort conditions to provide cooler air out of the panel outlets and warmer air from the floor outlets.

- **Floor Mode**

Air comes from the floor outlets. A slight amount of air is directed through the defrost and side window demister outlets.

- **Mix Mode**

Air comes from the floor, defrost and side window demist outlets. This mode works best in cold or snowy conditions.

- **Defrost Mode**

Air comes from the windshield and side window demist outlets. Use Defrost mode with maximum temperature settings for best windshield and side window defrosting and defogging. When the defrost mode is selected, the blower level may increase.

13. SYNC

Press the Sync soft-key to toggle the Sync feature On/Off. The Sync indicator is illuminated when this feature is enabled. Sync is used to synchronize the passenger temperature setting with the driver temperature setting. Changing the passenger temperature setting while in Sync will automatically exit this feature.

Climate Control Functions

A/C (Air Conditioning)

The Air Conditioning (A/C) button allows the operator to manually activate or deactivate the air conditioning system. When the air conditioning system is turned on, cool dehumidified air will flow through the outlets into the cabin. For improved fuel economy, press the A/C button to turn off the air conditioning and manually adjust the blower and airflow mode settings.

NOTE:

- If fog or mist appears on the windshield or side glass, select Defrost mode and increase blower speed.
- If your air conditioning performance seems lower than expected, check the front of the A/C condenser (located in front of the radiator), for an accumulation of dirt or insects. Clean with a gentle water spray from behind the radiator and through the condenser. Fabric front fascia protectors may reduce airflow to the condenser, reducing air conditioning performance.

Recirculation

When outside air contains smoke, odors, or high humidity, or if rapid cooling is desired, you may wish to recirculate interior air by pressing the Recirculation control button. The recirculation indicator will illuminate when this button is selected. Push the button a second time to turn off the Recirculation mode and allow outside air into the vehicle.

NOTE: In cold weather, use of Recirculation mode may lead to excessive window fogging. On systems with Manual Climate Controls, the Recirculation mode is not allowed in Defrost mode to improve window clearing operation. Recirculation will be disabled automatically if this mode is selected. Attempting to use Recirculation while in this mode will cause the LED in the control button to blink and then turn off.

Automatic Temperature Control (ATC)

ATC Hard-keys are located in the center of the instrument panel.

Soft-keys are accessible on the Uconnect Touch™ system screen.

Automatic Operation

1. Press the AUTO hard-key or soft-key button on the Automatic Temperature Control (ATC) Panel.

2. Next, adjust the temperature you would like the system to maintain by adjusting the driver and passenger temperature hard or soft control buttons (6, 7, 10, 11). Once the desired temperature is displayed, the system will achieve and automatically maintain that comfort level.

3. When the system is set up for your comfort level, it is not necessary to change the settings. You will experience the greatest efficiency by simply allowing the system to function automatically.

NOTE:

- It is not necessary to move the temperature settings for cold or hot vehicles. The system automatically adjusts the temperature, mode and blower speed to provide comfort as quickly as possible.
- The temperature can be displayed in U.S. or Metric units by selecting the US/M customer-programmable feature. Refer to the “Uconnect Touch™ System Settings” in this section of the manual.

To provide you with maximum comfort in the Automatic mode, during cold start-ups the blower fan will remain on low until the engine warms up. The blower will increase in speed and transition into Auto mode.

Manual Operation

The system allows for manual selection of blower speed, air distribution mode, A/C status and recirculation control.

The blower fan speed can be set to any fixed speed by adjusting the blower control. The fan will now operate at a fixed speed until additional speeds are selected. This allows the front occupants to control the volume of air circulated in the vehicle and cancel the Auto mode.

The operator can also select the direction of the airflow by selecting one of the available mode settings. A/C operation and Recirculation control can also be manually selected in Manual operation.

Operating Tips

NOTE: Refer to the chart at the end of this section for suggested control settings for various weather conditions.

Summer Operation

The engine cooling system in air-conditioned vehicles must be protected with a high-quality antifreeze coolant to provide proper corrosion protection and to protect against engine overheating. A solution of 50% ethylene glycol antifreeze coolant and 50% water is recommended. Refer to “Maintenance Procedures” in “Maintaining Your Vehicle” for proper coolant selection.

Winter Operation

Use of the air Recirculation mode during Winter months is not recommended because it may cause window fogging.

Vacation Storage

Any time you store your vehicle or keep it out of service (i.e., vacation) for two weeks or more, run the air conditioning system at idle for about five minutes in the fresh air and high blower setting. This will ensure adequate system lubrication to minimize the possibility of compressor damage when the system is started again.

Window Fogging

Interior fogging on the windshield can be quickly removed by turning the mode selector to Defrost. The Defrost/Floor mode can be used to maintain a clear windshield and provide sufficient heating. If side window fogging becomes a problem increase blower speed. Vehicle windows tend to fog on the inside in mild but rainy or humid weather.

NOTE:

- Recirculate without A/C should not be used for long periods, as fogging may occur.
- Automatic Temperature Controls (ATC) will automatically adjust the climate control settings to reduce or eliminate window fogging on the front windshield.

Outside Air Intake

Make sure the air intake, located directly in front of the windshield, is free of obstructions such as leaves. Leaves collected in the air intake may reduce airflow, and if they enter the plenum, they could plug the water drains. In Winter months, make sure the air intake is clear of ice, slush, and snow.

A/C Air Filter

The climate control system filters outside air containing dust, pollen and some odors. Strong odors cannot be totally filtered out. Refer to “Maintenance Procedures” in “Maintaining Your Vehicle” for filter replacement instructions.

STARTING AND OPERATING

CONTENTS

■ Starting Procedures 348

□ Automatic Transmission 348

□ Keyless Enter-N-Go 349

□ Normal Starting 349

□ Extreme Cold Weather (Below –20°F Or −29°C) 351

□ If Engine Fails To Start 351

□ After Starting 352

■ Engine Block Heater — If Equipped 352

■ Automatic Transmission 353

□ Key Ignition Park Interlock 354

□ Brake/Transmission Shift Interlock System . . 354

□ Eight-Speed Automatic Transmission – 3.6L Engine 355

□ Standard Shifter 355

□ Gear Ranges 355

□ Optional Shifter With AutoStick® 358

□ Five-Speed Automatic Transmission – 5.7L Engine 358

- Gear Ranges 359
- AutoStick® — If Equipped 365
  - Operation – 3.6L Engine 366
  - Operation – 5.7L Engine 367
- All-Wheel Drive (AWD) — If Equipped 369
- Driving On Slippery Surfaces 370
  - Acceleration 370
  - Traction 370
- Driving Through Water 371
  - Flowing/Rising Water 371
  - Shallow Standing Water 371
- Power Steering 373
- Multi-Displacement System (MDS) (If Equipped) — 5.7L Engine Only 374
- Parking Brake 375
- Anti-Lock Brake System 377
- Electronic Brake Control System 379
  - Anti-Lock Brake System (ABS) 379
  - Traction Control System (TCS) 380
  - Brake Assist System (BAS) 380
  - Electronic Stability Control (ESC) 381
  - Hill Start Assist (HSA) 383
  - Ready Alert Braking 385
  - Rain Brake Support 385
  - ESC Activation/Malfunction Indicator Light And ESC Off Indicator Light 386

- Synchronizing ESC 387

■ Tire Safety Information 387

- Tire Markings 387
- Tire Identification Number (TIN) 391
- Tire Terminology And Definitions 392
- Tire Loading And Tire Pressure 393

■ Tires — General Information 397

- Tire Pressure 397
- Tire Inflation Pressures 398
- Tire Pressures For High Speed Operation . . . 400
- Radial Ply Tires 400
- Spare Tire Matching Original Equipped Tire And Wheel – If Equipped 400
- Compact Spare Tire – If Equipped 401
- Full Size Spare – If Equipped 402
- Limited-Use Spare – If Equipped 402
- Tire Spinning 403
- Tread Wear Indicators 404
- Life Of Tire 404
- Replacement Tires 405

■ Tire Chains 406

■ Snow Tires 408

■ Tire Rotation Recommendations 409

■ Tire Pressure Monitor System (TPMS) 410

- Base System 412
- Premium System – If Equipped 415

- General Information 419

■ Fuel Requirements 420

- 3.6L Engine – If Equipped 420
- 5.7L Engine – If Equipped 420
- Reformulated Gasoline 421
- Gasoline/Oxygenate Blends 421
- E-85 Usage In Non-Flex Fuel Vehicles 421
- MMT In Gasoline 422
- Materials Added To Fuel 423
- Fuel System Cautions 423
- Carbon Monoxide Warnings 424

■ Flexible Fuel (3.6L Engine Only) — If Equipped 424

- E-85 General Information 424
- Ethanol Fuel (E-85) 425
- Fuel Requirements 425
- Selection Of Engine Oil For Flexible Fuel Vehicles (E-85) And Gasoline Vehicles 426
- Starting 427
- Cruising Range 427
- Replacement Parts 427
- Maintenance 427

■ Adding Fuel 428

- Emergency Fuel Filler Door Release 430

■ Vehicle Loading 431

- Vehicle Certification Label 431

□ Gross Vehicle Weight Rating (GVWR) 432
□ Gross Axle Weight Rating (GAWR) 432
□ Overloading 432
□ Loading 433
■ Trailer Towing 433
□ Common Towing Definitions 433
□ Trailer Hitch Classification 436
□ Trailer Towing Weights (Maximum Trailer Weight Ratings) 437
□ Trailer And Tongue Weight 438
□ Towing Requirements 439
□ Towing Tips 444
■ Recreational Towing (Behind Motorhome, Etc.) . . 445
□ Two-Wheel Drive And All-Wheel Drive 445

STARTING PROCEDURES

Before starting your vehicle, adjust your seat, adjust the inside and outside mirrors, fasten your seat belt, and if present, instruct all other occupants to buckle their seat belts.

WARNING!

- **When leaving the vehicle, always remove the key fob from the ignition and lock your vehicle.**
- **Never leave children alone in a vehicle, or with access to an unlocked vehicle. Allowing children to be in a vehicle unattended is dangerous for a number of reasons. A child or others could be seriously or fatally injured. Children should be warned not to touch the parking brake, brake pedal or the shift lever.**

(Continued)

WARNING! (Continued)

- **Do not leave the key fob in or near the vehicle, and do not leave Keyless Enter-N-Go in the ACC or ON/RUN mode. A child could operate power windows, other controls, or move the vehicle.**

Automatic Transmission

The shift lever must be in the NEUTRAL or PARK position before you can start the engine. Apply the brakes before shifting into any driving gear.

CAUTION!

Damage to the transmission may occur if the following precautions are not observed:

- **Shift into PARK only after the vehicle has come to a complete stop.**

(Continued)

CAUTION! (Continued)

- **Shift into or out of REVERSE only after the vehicle has come to a complete stop and the engine is at idle speed.**
- **Do not shift from REVERSE, PARK, or NEUTRAL into any forward gear when the engine is above idle speed.**
- **Before shifting into any gear, make sure your foot is firmly on the brake pedal.**

Keyless Enter-N-Go

This feature allows the driver to operate the ignition switch with the push of a button, as long as the Remote Keyless Entry (RKE) transmitter is in the passenger compartment.

Normal Starting

Using The ENGINE START/STOP Button

NOTE: Normal starting of either a cold or a warm engine is obtained without pumping or pressing the accelerator pedal.

To start the engine, the transmission must be in PARK or NEUTRAL. Press and hold the brake pedal while pressing the ENGINE START/STOP button once. The system takes over and attempts to start the vehicle. If the vehicle fails to start, the starter will disengage automatically after 10 seconds. If you wish to stop the cranking of the engine prior to the engine starting, press the button again.

To Turn Off The Engine Using ENGINE START/STOP Button

1. Place the shift lever in PARK, then press and release the ENGINE START/STOP button.

2. The ignition switch will return to the OFF position.

3. If the shift lever is not in PARK, the ENGINE START/STOP button must be held for two seconds and vehicle speed must be above 5 mph (8 km/h) before the engine will shut off. The ignition switch position will remain in the ACC position until the shift lever is in PARK and the button is pressed twice to the OFF position. If the shift lever is not in PARK and the ENGINE START/STOP button is pressed once, the EVIC (if equipped) will display a "Vehicle Not In Park" message and the engine will remain running. Never leave a vehicle out of the PARK position, or it could roll.

NOTE: If the ignition switch is left in the ACC or RUN (engine not running) position and the transmission is in PARK, the system will automatically time out after 30 minutes of inactivity and the ignition will switch to the OFF position.

ENGINE START/STOP Button Functions – With Driver's Foot OFF The Brake Pedal (In PARK Or NEUTRAL Position)

The Keyless Enter-N-Go feature operates similar to an ignition switch. It has four positions, OFF, ACC, RUN and START. To change the ignition switch positions without starting the vehicle and use the accessories follow these steps.

- Starting with the ignition switch in the OFF position:
- Press the ENGINE START/STOP button once to change the ignition switch to the ACC position (EVIC displays "ACC"),
- Press the ENGINE START/STOP button a second time to change the ignition switch to the RUN position (EVIC displays "RUN"),

- Press the ENGINE START/STOP button a third time to return the ignition switch to the OFF position (EVIC displays "OFF").

Extreme Cold Weather (Below –20°F Or −29°C)

To ensure reliable starting at these temperatures, use of an externally powered electric engine block heater (available from your authorized dealer) is recommended.

If Engine Fails To Start

WARNING!

- **Never pour fuel or other flammable liquids into the throttle body air inlet opening in an attempt to start the vehicle. This could result in a flash fire causing serious personal injury.**

(Continued)

WARNING! (Continued)

- **Do not attempt to push or tow your vehicle to get it started. Vehicles equipped with an automatic transmission cannot be started this way. Unburned fuel could enter the catalytic converter and once the engine has started, ignite and damage the converter and vehicle. If the vehicle has a discharged battery, booster cables may be used to obtain a start from a booster battery or the battery in another vehicle. This type of start can be dangerous if done improperly. Refer to "Jump Starting" in "What To Do In Emergencies" for further information.**

Clearing A Flooded Engine (Using ENGINE START/STOP Button)

If the engine fails to start after you have followed the "Normal Starting" or "Extreme Cold Weather" procedures, it may be flooded. To clear any excess fuel, press and hold the brake pedal, push the accelerator pedal all the way to the floor and hold it, then press and release the ENGINE START/STOP button once. The starter motor will engage automatically, run for 10 seconds, and then disengage. Once this occurs, release the accelerator pedal and the brake pedal, wait 10 to 15 seconds, then repeat the "Normal Starting" procedure.

After Starting

The idle speed is controlled automatically and it will decrease as the engine warms up.

ENGINE BLOCK HEATER — IF EQUIPPED

The engine block heater warms the engine, and permits quicker starts in cold weather. Connect the cord to a standard 110-115 Volt AC electrical outlet with a grounded, three-wire extension cord.

The engine block heater cord is routed under the hood on the driver side of the vehicle. It has a removable cap that is located on the driver side of the Integrated Power Module.

The engine block heater must be plugged in at least one hour to have an adequate warming effect on the engine.

WARNING!

Remember to disconnect the engine block heater cord before driving. Damage to the 110-115 Volt electrical cord could cause electrocution.

AUTOMATIC TRANSMISSION

CAUTION!

Damage to the transmission may occur if the following precautions are not observed:

- **Shift into PARK only after the vehicle has come to a complete stop.**
- **Shift into or out of REVERSE only after the vehicle has come to a complete stop and the engine is at idle speed.**
- **Do not shift between PARK, REVERSE, NEUTRAL or DRIVE when the engine is above idle speed.**
- **Before shifting into any gear, make sure your foot is firmly pressing the brake pedal.**

NOTE: You must press and hold the brake pedal while shifting out of PARK.

WARNING!

- **It is dangerous to move the shift lever out of PARK or NEUTRAL if the engine speed is higher than idle speed. If your foot is not firmly pressing on the brake pedal, the vehicle could accelerate quickly forward or in reverse. You could lose control of the vehicle and hit someone or something. Only shift into gear when the engine is idling normally and when your foot is firmly pressing on the brake pedal.**

(Continued)

WARNING! (Continued)

- **Unintended movement of a vehicle could injure those in or near the vehicle. As with all vehicles, you should never exit a vehicle while the engine is running. Before exiting a vehicle, always apply the parking brake, shift the transmission into PARK, and turn the engine OFF. When the ignition is in the OFF position, the shift lever is locked in PARK, securing the vehicle against unwanted movement. Furthermore, you should never leave unattended children inside a vehicle.**

Key Ignition Park Interlock

This vehicle is equipped with a Key Ignition Park Interlock which requires the shift lever to be placed in PARK before the engine can be turned off. This helps the driver avoid inadvertently leaving the vehicle without placing the transmission in PARK. This system also locks the shift lever in PARK whenever the ignition switch is in the OFF position.

Brake/Transmission Shift Interlock System

This vehicle is equipped with a Brake Transmission Shift Interlock (BTSI) that holds the shift lever in the PARK position unless the brakes are applied. To move the shift lever out of the PARK position, the ignition switch must be turned to the ON/RUN or START position (engine running or not) and the brake pedal must be pressed.

Eight-Speed Automatic Transmission – 3.6L Engine

This vehicle is equipped with a state of the art, fuel efficient eight-speed transmission. The electronic shift lever in this vehicle does not slide like a conventional shifter. Instead, the shift lever is spring loaded and moves forward and rearward, always returning to the center position after each gear is selected.

The transmission gear (PRND) is displayed both on the shift lever and in the Electronic Vehicle Information Center (EVIC).

Standard Shifter

The standard shift lever has PARK, REVERSE, NEUTRAL, DRIVE, and LOW shift positions. Using the LOW position manually downshifts the transmission to a lower gear based on vehicle speed.

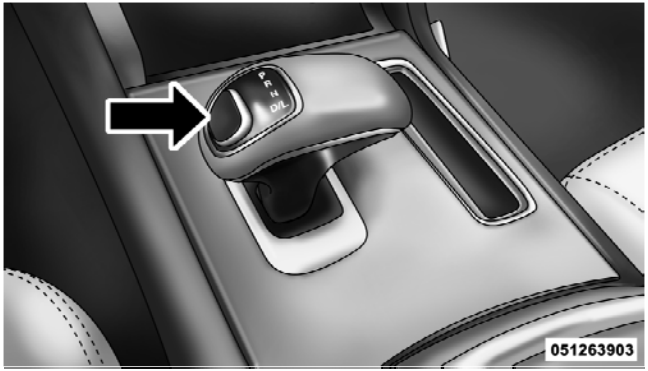

Shift Lever

Gear Ranges

DO NOT race the engine when shifting from PARK or NEUTRAL into another gear range.

Shifting From PARK To DRIVE

- Firmly press the brake pedal, press the lock button on the shift lever, then pull and hold the shift lever fully rearward until “D” is displayed in the EVIC.
- To shift back into PARK from DRIVE, bring the vehicle to a complete stop, fully press the brake pedal, press the lock button on the shift lever, then push and hold the shift lever fully forward until “P” is displayed in the EVIC.

Shifting From REVERSE To NEUTRAL

- Pull the shift lever rearward to the first detent and release. “N” will display in the EVIC.
- To shift back into REVERSE from NEUTRAL, firmly press the brake pedal, press the lock button on the shift lever, then push the shift lever forward to the first detent and release. “R” will display in the EVIC.

Shifting From NEUTRAL To DRIVE

- Firmly press the brake pedal, press the lock button on the shift lever, then pull the shift lever rearward and release. “D” will display in the EVIC.
- To shift back into NEUTRAL from DRIVE, firmly press the brake pedal, press the lock button on the shift lever, then push the shift lever forward and release. “N” will display in the EVIC.

Shifting From REVERSE To DRIVE

- Bring the vehicle to a complete stop, firmly press the brake pedal, press the lock button on the shift lever, then pull the shift lever rearward and release when “D” is displayed in the EVIC.
- To shift back into REVERSE from DRIVE, bring the vehicle to a complete stop, firmly press the brake pedal, press the lock button on the shift lever, then push the shift lever forward and release when “R” is displayed in the EVIC.

Shifting From DRIVE To SPORT/LOW

Vehicles Equipped With SPORT Mode

- To shift from DRIVE to SPORT, pull the shift lever rearward until “S” is displayed in the EVIC.
- To shift back into DRIVE from SPORT, pull the shift lever rearward until “D” is displayed in the EVIC.

Vehicles Equipped With LOW Mode

- To shift from DRIVE to LOW, pull the shift lever rearward until “L” is displayed in the EVIC.
- To shift back into DRIVE from LOW, pull the shift lever rearward until “D” is displayed in the EVIC.

Transmission Limp Home Mode

Transmission function is monitored electronically for abnormal conditions. If a condition is detected that could result in transmission damage, Transmission Limp Home Mode is activated. In this mode, the transmission may operate only in certain gears, or may not shift at all. Vehicle performance may be severely degraded and the engine may stall. In some situations, the transmission may not re-engage if the engine is turned off and restarted. The Malfunction Indicator Light (MIL) may be illuminated. A message in the instrument cluster will inform the driver of the more serious conditions, and indicate what actions may be necessary.

In the event of a momentary problem, the transmission can be reset to regain all forward gears by performing the following steps.

NOTE: In cases where the instrument cluster message indicates the transmission may not re-engage after engine shutdown, perform this procedure only in a desired location (preferably, at your authorized dealer).

1. Stop the vehicle.
2. Shift the transmission into PARK, if possible.

3. Turn the engine OFF.

4. Wait approximately 30 seconds.

5. Restart the engine.

6. Shift into the desired gear range. If the problem is no longer detected, the transmission will return to normal operation.

NOTE: Even if the transmission can be reset, we recommend that you visit your authorized dealer at your earliest possible convenience. Your authorized dealer has diagnostic equipment to determine if the problem could recur.

If the transmission cannot be reset, authorized dealer service is required.

Optional Shifter With AutoStick®

The optional shift lever (with AutoStick® shift paddles mounted on the steering wheel) provides PARK, REVERSE, NEUTRAL, DRIVE, and SPORT shift positions. Once in the DRIVE range, tapping the shift lever rearward will toggle between SPORT mode and DRIVE mode. You do not need to press the shift lever button when toggling between DRIVE and SPORT modes.

Manual shifts can be made using the AutoStick® shift control (refer to "AutoStick®" in this section). Pressing the shift paddles (-/+) while in the DRIVE or SPORT position will manually select the transmission gear, and will display the current gear in the instrument cluster as 8, 7, 6, 5, 4, 3, 2, 1.

Five-Speed Automatic Transmission – 5.7L Engine

The shift lever position display (located in the instrument panel cluster) indicates the transmission gear range. You must press the brake pedal to move the shift lever out of the PARK position (refer to "Brake/Transmission Shift Interlock System" in this section). To drive, move the shift lever from PARK or NEUTRAL to the DRIVE position.

The electronically-controlled transmission provides a precise shift schedule. The transmission electronics are self-calibrating; therefore, the first few shifts on a new vehicle may be somewhat abrupt. This is a normal condition, and precision shifts will develop within a few hundred miles (kilometers).

Shifting from DRIVE to PARK or REVERSE should be done only after the accelerator pedal is released and the vehicle is stopped. Be sure to keep your foot on the brake pedal when moving the shift lever between these gears.

The transmission shift lever has only PARK, REVERSE, NEUTRAL, and DRIVE shift positions. Manual shifts can be made using the "AutoStick®" shift control (refer to "AutoStick®" in this section). Moving the shift lever to the left or right (-/+) while in the DRIVE position will manually select the transmission gear, and will display that gear in the instrument cluster as 4, 3, 2, 1.

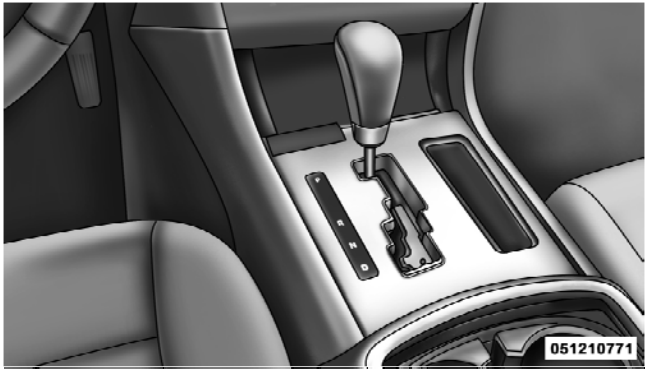

Shift Lever

Gear Ranges

DO NOT race the engine when shifting from PARK or NEUTRAL into another gear range.

PARK

This range supplements the parking brake by locking the transmission. The engine can be started in this range.

Never attempt to use PARK while the vehicle is in motion. Apply the parking brake when leaving the vehicle in this range.

When parking on a level surface, you may place the shift lever in the PARK position first, and then apply the parking brake.

When parking on a hill, apply the parking brake before placing the shift lever in PARK, otherwise the load on the transmission locking mechanism may make it difficult to move the shift lever out of PARK. As an added precaution, turn the front wheels toward the curb on a downhill grade and away from the curb on an uphill grade.

WARNING!

- **Never use the PARK position as a substitute for the parking brake. Always apply the parking brake fully when parked to guard against vehicle movement and possible injury or damage.**
- **Your vehicle could move and injure you and others if it is not completely in PARK. Check by trying to move the shift lever rearward (with the brake pedal released), after you have placed it in PARK. Make sure the transmission is in PARK before leaving the vehicle.**

(Continued)

WARNING! (Continued)

- **It is dangerous to move the shift lever out of PARK or NEUTRAL if the engine speed is higher than idle speed. If your foot is not firmly pressing the brake pedal, the vehicle could accelerate quickly forward or in reverse. You could lose control of the vehicle and hit someone or something. Only shift into gear when the engine is idling normally and when your foot is firmly pressing the brake pedal.**

(Continued)

WARNING! (Continued)

- **Unintended movement of a vehicle could injure those in or near the vehicle. As with all vehicles, you should never exit a vehicle while the engine is running. Before exiting a vehicle, always apply the parking brake, shift the transmission into PARK, and turn the engine off. When the ignition is in the OFF position, the shift lever is locked in the PARK, securing the vehicle against unwanted movement.**
- **When leaving the vehicle, always remove the key fob from the ignition and lock your vehicle.**

(Continued)

WARNING! (Continued)

- **Never leave children alone in a vehicle, or with access to an unlocked vehicle. Allowing children to be in a vehicle unattended is dangerous for a number of reasons. A child or others could be seriously or fatally injured. Children should be warned not to touch the parking brake, brake pedal or the shift lever.**
- **Do not leave the key fob in or near the vehicle, and do not leave Keyless Enter-N-Go in the ACC or ON/RUN mode. A child could operate power windows, other controls, or move the vehicle.**

CAUTION!

- **Before moving the shift lever out of PARK, you must turn the ignition switch from the LOCK/OFF position to the ON/RUN position, and also press the brake pedal. Otherwise, damage to the shift lever could result.**
- **DO NOT race the engine when shifting from PARK or NEUTRAL into another gear range, as this can damage the drivetrain.**

The following indicators should be used to ensure that you have engaged the shift lever into the PARK position:

- When shifting into PARK, move the shift lever all the way forward and to the left until it stops and is fully seated.

- Look at the shift lever position display and verify that it indicates the PARK position.
- With brake pedal released, verify that the shift lever will not move out of PARK.

REVERSE

This range is for moving the vehicle backward. Shift into REVERSE only after the vehicle has come to a complete stop.

NEUTRAL

Use this range when the vehicle is standing for prolonged periods with engine running. The engine may be started in this range. Set the parking brake and shift the transmission into PARK if you must leave the vehicle.

WARNING!

Do not coast in NEUTRAL and never turn off the ignition to coast down a hill. These are unsafe practices that limit your response to changing traffic or road conditions. You might lose control of the vehicle and have a collision.

CAUTION!

Towing the vehicle, coasting, or driving for any other reason with the transmission in NEUTRAL can result in severe transmission damage. Refer to "Recreational Towing" in "Starting And Operating" and "Towing A Disabled Vehicle" in "What To Do In Emergencies" for further information.

DRIVE

This range should be used for most city and highway driving. It provides the smoothest upshifts and downshifts, and the best fuel economy. The transmission automatically upshifts through underdrive first, second, and third gears, direct fourth gear and overdrive fifth gear. The DRIVE position provides optimum driving characteristics under all normal operating conditions.

When frequent transmission shifting occurs (such as when operating the vehicle under heavy loading conditions, in hilly terrain, traveling into strong head winds, or while towing heavy trailers), use the "AutoStick®" mode (refer to "AutoStick®" in this section) to select a lower gear. Under these conditions, using a lower gear will improve performance and extend transmission life by reducing excessive shifting and heat buildup.

Transmission Limp Home Mode

Transmission function is monitored electronically for abnormal conditions. If a condition is detected that could result in transmission damage, Transmission Limp Home Mode is activated. In this mode, the transmission remains in the current gear until the vehicle is brought to a stop. After the vehicle has stopped, the transmission will remain in second gear regardless of which forward gear is selected. PARK, REVERSE, and NEUTRAL will continue to operate. The Malfunction Indicator Light (MIL) may be illuminated. Limp Home Mode allows the vehicle to be driven to an authorized dealer for service without damaging the transmission.

In the event of a momentary problem, the transmission can be reset to regain all forward gears by performing the following steps:

1. Stop the vehicle.
2. Shift the transmission into PARK.

3. Turn the engine OFF.

4. Wait approximately 10 seconds.

5. Restart the engine.

6. Shift into the desired gear range. If the problem is no longer detected, the transmission will return to normal operation.

NOTE: Even if the transmission can be reset, we recommend that you visit your authorized dealer at your earliest possible convenience. Your authorized dealer has diagnostic equipment to determine if the problem could recur.

If the transmission cannot be reset, authorized dealer service is required.

Overdrive Operation

The automatic transmission includes an electronically controlled Overdrive (fifth gear). The transmission will automatically shift into the Overdrive gear if the following conditions are present:

- the shift lever is in the DRIVE position,
- vehicle speed is sufficiently high, and
- the driver is not heavily pressing the accelerator.

AUTOSTICK® — IF EQUIPPED

AutoStick® is a driver-interactive transmission feature that offers manual gear shifting to provide you with more control of the vehicle. AutoStick® allows you to maximize engine braking, eliminate undesirable upshifts and downshifts, and improve overall vehicle performance.

This system can also provide you with more control during passing, city driving, cold slippery conditions, mountain driving, trailer towing, and many other situations.

Operation – 3.6L Engine

When the transmission is in DRIVE or SPORT mode, it will operate automatically, shifting between the eight available gears. To engage AutoStick®, simply tap one of the steering wheel-mounted shift paddles (+/-) while in DRIVE or SPORT mode. When AutoStick® is active, the current transmission gear is displayed in the instrument cluster. In AutoStick® mode, the transmission will only shift up or down when (+/-) is manually selected by the driver, except as described below. It will remain in the selected gear until another upshift or downshift is chosen.

- If AutoStick® is engaged while in DRIVE mode, lack of accelerator pedal activity will cause the transmission to revert to automatic operation. The transmission will also upshift automatically once redline is reached. If the pedal is pressed to the floor, the transmission will downshift when possible (based on current vehicle speed and gear).
- If AutoStick® is engaged while in SPORT mode, manual gear selection will be maintained until either SPORT mode is exited or as described below. The transmission will not upshift automatically at redline in this mode, nor will downshifts be obtained if the pedal is pressed to the floor.
- In either DRIVE or SPORT mode, the transmission will automatically downshift as the vehicle slows to a stop (to prevent engine lugging) and will display the current gear. Tapping the (+) paddle (at a stop) will allow starting in second gear. After a stop, the driver should manually upshift (+) the transmission as the vehicle accelerates.

To disengage AutoStick® mode, press and hold the (+) shift paddle until “D” or “S” is once again displayed in the instrument cluster. You can shift in or out of the AutoStick® mode at any time without taking your foot off the accelerator pedal.

WARNING!

Do not downshift for additional engine braking on a slippery surface. The drive wheels could lose their grip and the vehicle could skid, causing a collision or personal injury.

Operation – 5.7L Engine

When the shift lever is in the DRIVE position, the transmission will operate automatically, shifting between the five available gears. To engage AutoStick®, simply move the shift lever to the right or left (+/-) while in the DRIVE position, or tap one of the steering wheel-mounted shift paddles (+/-), if equipped. When AutoStick® is active, the current transmission gear is displayed in the instrument cluster. In AutoStick® mode, the transmission will shift up or down when (+/-) is manually selected by the driver (using the shift lever, or the shift paddles [if equipped]), unless an engine lugging or overspeed condition would result. It will remain in the selected gear until another upshift or downshift is chosen, except as described below.

- If AutoStick® is engaged while in DRIVE mode, the transmission will automatically shift up when maximum engine speed is reached.
- If AutoStick® is engaged while in SPORT mode, the transmission will remain in the selected gear even when maximum engine speed is reached. The transmission will upshift only when commanded by the driver.
- The transmission will automatically downshift as the vehicle slows down (to prevent engine lugging) and will display the current gear.
- The transmission will automatically downshift to first gear when coming to a stop. After a stop, the driver should manually upshift (+) the transmission as the vehicle is accelerated.

- Heavily pressing the accelerator pedal will generate an automatic downshift (for improved acceleration) when reasonable.
- You can start out in first or second gear. Tapping (+) (at a stop) will allow starting in second gear. Starting out in second gear is helpful in snowy or icy conditions.
- The system will ignore attempts to upshift at too low of a vehicle speed.
- Avoid using speed control when AutoStick® is engaged.
- Transmission shifting will be more noticeable when AutoStick® is engaged.

To disengage AutoStick® mode, hold the shift lever to the right or press and hold the (+) shift paddle (if equipped) until "D" is once again displayed in the instrument cluster. You can shift in or out of the AutoStick® mode at any time without taking your foot off the accelerator pedal.

WARNING!

Do not downshift for additional engine braking on a slippery surface. The drive wheels could lose their grip and the vehicle could skid, causing a collision or personal injury.

ALL-WHEEL DRIVE (AWD) — IF EQUIPPED

This vehicle is equipped with an active on-demand All-Wheel Drive (AWD) system which makes available optimum traction for a wide variety of road surface and driving conditions. The system minimizes wheel slip by automatically redirecting torque to the front and rear wheels as necessary.

To maximize fuel economy, your AWD vehicle automatically defaults to rear-wheel drive (RWD) when road and environmental conditions are such that wheel slip is unlikely to occur. When specific road and environmental conditions require increased levels of road traction, the vehicle automatically shifts into AWD mode. Automatic AWD operation could be activated by outside temperature, wheel slip, or other predetermined conditions (there may be a slight delay for AWD engagement after a wheel slip condition occurs). AWD can also be manually selected by moving the shift lever into the AutoStick® mode (+/-) or activating the windshield wipers for an extended period of time. Drive mode, RWD or AWD, is displayed momentarily in the Electronic Vehicle Information Center (EVIC) in the gage area of the vehicle display when the transmission is first shifted into gear, and if the drive mode changes during vehicle operation.

NOTE: If the "SERVICE AWD SYSTEM" warning message appears after engine start up, or during driving, it means that the AWD system is not functioning properly and that service is required. Refer to "Electronic Vehicle Information Center (EVIC)" in "Understanding Your Instrument Panel" for further information.

CAUTION!

All wheels must have the same size and type tires. Unequal tire sizes must not be used. Unequal tire size may cause failure of the front differential and/or the transfer case.

DRIVING ON SLIPPERY SURFACES

Acceleration

Rapid acceleration on snow covered, wet, or other slippery surfaces may cause the driving wheels to pull erratically to the right or left. This phenomenon occurs when there is a difference in the surface traction under the rear (driving) wheels.

WARNING!

Rapid acceleration on slippery surfaces is dangerous. Unequal traction can cause sudden pulling of the rear wheels. You could lose control of the vehicle and possibly have a collision. Accelerate slowly and carefully whenever there is likely to be poor traction (ice, snow, wet mud, loose sand, etc.).

Traction

When driving on wet or slushy roads, it is possible for a wedge of water to build up between the tire and road surface. This is known as hydroplaning and may cause partial or complete loss of vehicle control and stopping ability. To reduce this possibility, the following precautions should be observed:

1. Slow down during rainstorms or when the roads are slushy.

2. Slow down if the road has standing water or puddles.

3. Replace tires when tread wear indicators first become visible.

4. Keep tires properly inflated.

5. Maintain sufficient distance between your vehicle and the vehicle in front of you to avoid a collision in a sudden stop.

DRIVING THROUGH WATER

Driving through water more than a few inches/centimeters deep will require extra caution to ensure safety and prevent damage to your vehicle.

Flowing/Rising Water

WARNING!

Do not drive on or across a road or path where water is flowing and/or rising (as in storm run-off). Flowing water can wear away the road or path's surface and cause your vehicle to sink into deeper water. Furthermore, flowing and/or rising water can carry your vehicle away swiftly. Failure to follow this warning may result in injuries that are serious or fatal to you, your passengers, and others around you.

Shallow Standing Water

Although your vehicle is capable of driving through shallow standing water, consider the following Caution and Warning before doing so.

CAUTION!

- **Always check the depth of the standing water before driving through it. Never drive through standing water that is deeper than the bottom of the tire rims mounted on the vehicle.**
- **Determine the condition of the road or the path that is under water and if there are any obstacles in the way before driving through the standing water.**
- **Do not exceed 5 mph (8 km/h) when driving through standing water. This will minimize wave effects.**

(Continued)

CAUTION! (Continued)

- Driving through standing water may cause damage to your vehicle's drivetrain components. Always inspect your vehicle's fluids (i.e., engine oil, transmission, axle, etc.) for signs of contamination (i.e., fluid that is milky or foamy in appearance) after driving through standing water. Do not continue to operate the vehicle if any fluid appears contaminated, as this may result in further damage. Such damage is not covered by the New Vehicle Limited Warranty.
- Getting water inside your vehicle's engine can cause it to lock up and stall out, and cause serious internal damage to the engine. Such damage is not covered by the New Vehicle Limited Warranty.

WARNING!

- Driving through standing water limits your vehicle's traction capabilities. Do not exceed 5 mph (8 km/h) when driving through standing water.
- Driving through standing water limits your vehicle's braking capabilities, which increases stopping distances. Therefore, after driving through standing water, drive slowly and lightly press on the brake pedal several times to dry the brakes.
- Getting water inside your vehicle's engine can cause it to lock up and stall out, and leave you stranded.
- Failure to follow these warnings may result in injuries that are serious or fatal to you, your passengers, and others around you.

POWER STEERING

Your vehicle is equipped with an electro-hydraulic power steering system that will give you good vehicle response and increased ease of maneuverability in tight spaces. The system will vary its assist to provide light efforts while parking and good feel while driving. If the electro-hydraulic power steering system experiences a fault that prevents it from providing power steering assist, then the system will provide mechanical steering capability.

CAUTION!

Extreme steering maneuvers may cause the electrically driven pump to reduce or stop power steering assistance in order to prevent damage to the system. Normal operation will resume once the system is allowed to cool.

If the "SERVICE POWER STEERING SYSTEM" message and a flashing icon are displayed on the EVIC screen, it indicates that the vehicle needs to be taken to the dealer for service. It is likely the vehicle has lost power steering assistance. Refer to "Electronic Vehicle Information Center (EVIC)" in "Understanding Your Instrument Panel" for further information.

If the "POWER STEERING SYSTEM OVER TEMP" message and an icon are displayed on the EVIC screen, it indicates that extreme steering maneuvers may have occurred, which caused an over temperature condition in the power steering system. You will lose power steering assistance momentarily until the over temperature condition no longer exists. Once driving conditions are safe, then pull over and let vehicle idle for a few moments until the light turns off. Refer to "Electronic Vehicle Information Center (EVIC)" in "Understanding Your Instrument Panel" for further information.

NOTE:

- Even if power steering assistance is no longer operational, it is still possible to steer the vehicle. Under these conditions there will be a substantial increase in steering effort, especially at very low vehicle speeds and during parking maneuvers.
- If the condition persists, see your authorized dealer for service.

MULTI-DISPLACEMENT SYSTEM (MDS) (IF EQUIPPED) — 5.7L ENGINE ONLY

This feature offers improved fuel economy by shutting off four of the engine's eight cylinders during light load and cruise conditions. The system is automatic with no driver inputs or additional driving skills required.

NOTE: The MDS system may take some time to return to full functionality after a battery disconnect.

PARKING BRAKE

Before leaving the vehicle, make sure that the parking brake is fully applied and place the shift lever in the PARK position.

The foot operated parking brake is located below the lower left corner of the instrument panel. To apply the park brake, firmly push the park brake pedal fully. To release the parking brake, press the park brake pedal a second time and let your foot up as you feel the brake disengage.

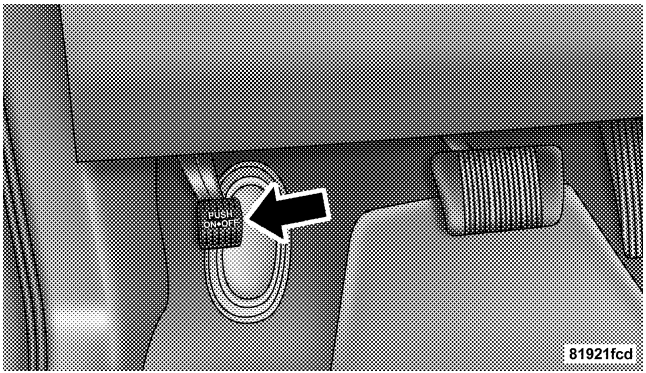

Parking Brake

When the parking brake is applied with the ignition switch in the ON position, the “Brake Warning Light” in the instrument cluster will illuminate.

NOTE:

- When the parking brake is applied and the transmission is placed in gear, the "Brake Warning Light" will flash. If vehicle speed is detected, a chime will sound to alert the driver. Fully release the parking brake before attempting to move the vehicle.
- This light only shows that the parking brake is applied. It does not show the degree of brake application.

When parking on a hill, it is important to turn the front wheels toward the curb on a downhill grade and away from the curb on an uphill grade. Apply the parking brake before placing the shift lever in PARK, otherwise the load on the transmission locking mechanism may make it difficult to move the shift lever out of PARK. The parking brake should always be applied whenever the driver is not in the vehicle.

WARNING!

- **Never use the PARK position as a substitute for the parking brake. Always apply the parking brake fully when parked to guard against vehicle movement and possible injury or damage.**
- **When leaving the vehicle, always remove the key fob from the ignition and lock your vehicle.**
- **Never leave children alone in a vehicle, or with access to an unlocked vehicle. Allowing children to be in a vehicle unattended is dangerous for a number of reasons. A child or others could be seriously or fatally injured. Children should be warned not to touch the parking brake, brake pedal or the shift lever.**

(Continued)

WARNING! (Continued)

- **Do not leave the key fob in or near the vehicle, and do not leave a vehicle equipped with Keyless Enter-N-Go in the ACC or ON/RUN mode. A child could operate power windows, other controls, or move the vehicle.**
- **Be sure the parking brake is fully disengaged before driving; failure to do so can lead to brake failure and a collision.**
- **Always fully apply the parking brake when leaving your vehicle, or it may roll and cause damage or injury. Also be certain to leave the transmission in PARK. Failure to do so may allow the vehicle to roll and cause damage or injury.**

CAUTION!

If the "Brake Warning Light" remains on with the parking brake released, a brake system malfunction is indicated. Have the brake system serviced by an authorized dealer immediately.

ANTI-LOCK BRAKE SYSTEM

The Anti-Lock Brake System (ABS) provides increased vehicle stability and brake performance under most braking conditions. The system automatically "pumps" the brakes during severe braking conditions to prevent wheel lock-up.

The Electronic Brake Force Distribution (EBD) prevents the rear wheels from over-braking and provides greater control of available braking forces applied to the rear axle.

When the vehicle is driven over 7 mph (11 km/h), you may also hear a slight clicking sound as well as some related motor noises. These noises are the system performing its self check cycle to ensure that the ABS is working properly. This self check occurs each time the vehicle is started and accelerated past 7 mph (11 km/h).

ABS is activated during braking under certain road or stopping conditions. ABS-inducing conditions can include ice, snow, gravel, bumps, railroad tracks, loose debris, or panic stops.

You also may experience the following when the brake system goes into Anti-Lock:

- The ABS motor running (it may continue to run for a short time after the stop),
- The clicking sound of solenoid valves,
- Brake pedal pulsations, and
- A slight drop or fall away of the brake pedal at the end of the stop.

These are all normal characteristics of ABS.

WARNING!

- **The ABS contains sophisticated electronic equipment that may be susceptible to interference caused by improperly installed or high output radio transmitting equipment. This interference can cause possible loss of anti-lock braking capability. Installation of such equipment should be performed by qualified professionals.**
- **Pumping of the Anti-Lock Brakes will diminish their effectiveness and may lead to a collision. Pumping makes the stopping distance longer. Just press firmly on your brake pedal when you need to slow down or stop.**

(Continued)

WARNING! (Continued)

- **The ABS cannot prevent the natural laws of physics from acting on the vehicle, nor can it increase braking or steering efficiency beyond that afforded by the condition of the vehicle brakes and tires or the traction afforded.**
- **The ABS cannot prevent collisions, including those resulting from excessive speed in turns, following another vehicle too closely, or hydroplaning.**
- **The capabilities of an ABS equipped vehicle must never be exploited in a reckless or dangerous manner that could jeopardize the user's safety or the safety of others.**

All vehicle wheels and tires must be the same size and type and tires must be properly inflated to produce accurate signals for the computer.

ELECTRONIC BRAKE CONTROL SYSTEM

Your vehicle is equipped with an advanced electronic brake control system that include Anti-Lock Brake System (ABS), Traction Control System (TCS), Brake Assist System (BAS), and the Electronic Stability Control (ESC). All four of these systems work together to enhance vehicle stability and control in various driving conditions.

Also, your vehicle is equipped with Hill Start Assist (HSA), Ready Alert Braking, and Rain Brake Support.

Anti-Lock Brake System (ABS)

This system aids the driver in maintaining vehicle control under adverse braking conditions by controlling hydraulic brake pressure. This prevents wheel lock-up to help avoid skidding on slippery surfaces during braking. Refer to "Anti-Lock Brake System" in "Starting and Operating" for further information.

WARNING!

The ABS cannot prevent the natural laws of physics from acting on the vehicle, nor can it increase the traction afforded by prevailing road conditions. The ABS cannot prevent collisions, including those resulting from excessive speed in turns, driving on very slippery surfaces, or hydroplaning. The capabilities of an ABS-equipped vehicle must never be exploited in a reckless or dangerous manner that could jeopardize the user's safety or the safety of others.

Traction Control System (TCS)

This system monitors the amount of wheel spin of each driven wheel. If wheel spin is detected, brake pressure is applied to the slipping wheel(s) and engine power is reduced to provide enhanced acceleration and stability.

Brake Assist System (BAS)

This system complements the ABS by optimizing the vehicle braking capability during emergency brake maneuvers. This system detects an emergency braking situation by sensing the rate and amount of brake application and then applies optimum pressure to the brakes. This can help reduce braking distances.

Applying the brakes very quickly results in the best BAS assistance. To receive the benefits of this system, you must apply continuous brake pedal pressure during the stopping sequence. Do not reduce brake pedal pressure unless braking is no longer desired. Once the brake pedal is released, the BAS is deactivated.

WARNING!

The BAS cannot prevent the natural laws of physics from acting on the vehicle, nor can it increase the traction afforded by prevailing road conditions. The BAS cannot prevent collisions, including those resulting from excessive speed in turns, driving on very slippery surfaces, or hydroplaning. The capabilities of a BAS-equipped vehicle must never be exploited in a reckless or dangerous manner that could jeopardize the user's safety or the safety of others.

Electronic Stability Control (ESC)

This system enhances directional control and stability of the vehicle under various driving conditions. The ESC corrects for oversteering and understeering the vehicle by applying the brake of the appropriate wheel. Engine power may also be reduced to assist in counteracting the condition of oversteer or understeer and help the vehicle maintain the desired path.

The ESC uses sensors in the vehicle to determine the path that the driver intends to steer the vehicle and compares it to the actual path of the vehicle. When the actual path does not match the intended path, the ESC applies the brake of the appropriate wheel to assist in counteracting the condition of oversteer or understeer.

- Oversteer - when the vehicle is turning more than appropriate for the steering wheel position.
- Understeer - when the vehicle is turning less than appropriate for the steering wheel position.

ESC Operating Modes

The ESC system has two available operating modes:

ESC On

This is the normal operating mode for the ESC. Whenever the vehicle is started, the ESC system will be in this mode. This mode should be used for most driving conditions. The ESC should only be turned OFF for specific reasons as noted in the following paragraphs.

Partial Off

The "Partial Off" mode is intended for times when a more spirited driving experience is desired. It is also intended for driving in deep snow, sand, or gravel. This mode disables the TCS portion of the ESC and raises the threshold for ESC activation, which allows for more wheel spin than what ESC normally allows.

The "ESC Off" switch is located on the switch bank in the center of the instrument panel. To enter the "Partial Off" mode, momentarily press the "ESC Off" switch and the "ESC Activation/Malfunction Indicator Light" will illuminate. To turn the ESC on again, momentarily press the "ESC Off" switch and the "ESC Activation/Malfunction Indicator Light" will turn off.

NOTE: To improve the vehicle's traction when driving with snow chains, or when starting off in deep snow, sand, or gravel, it may be desirable to switch to the "Partial Off" mode by momentarily pressing the "ESC Off" switch. Once the situation requiring "Partial Off" mode is overcome, turn the ESC on again by momentarily pressing the "ESC Off" switch. This may be done while the vehicle is in motion.

WARNING!

The Electronic Stability Control (ESC) cannot prevent the natural laws of physics from acting on the vehicle, nor can it increase the traction afforded by prevailing road conditions. ESC cannot prevent accidents, including those resulting from excessive speed in turns, driving on very slippery surfaces, or hydroplaning. Only a safe, attentive, and skillful driver can prevent accidents. The capabilities of an ESC equipped vehicle must never be exploited in a reckless or dangerous manner which could jeopardize the user's safety or the safety of others.

Hill Start Assist (HSA)

The HSA system is designed to assist the driver when starting a vehicle from a stop on a hill. HSA will maintain the level of brake pressure the driver applied for a short period of time after the driver takes their foot off of the brake pedal. If the driver does not apply the throttle during this short period of time, the system will release brake pressure and the vehicle will roll down the hill. The system will release brake pressure in proportion to the amount of throttle applied as the vehicle starts to move in the intended direction of travel.

HSA Activation Criteria

The following criteria must be met in order for HSA to activate:

- Vehicle must be stopped.
- Vehicle must be on a 6% (approximate) grade or greater hill.
- Gear selection matches vehicle uphill direction (i.e., vehicle facing uphill is in forward gear; vehicle backing uphill is in REVERSE gear).

HSA will work in REVERSE and all forward gears when the activation criteria have been met. The system will not activate if the vehicle is placed in NEUTRAL or PARK.

WARNING!

There may be situations on minor hills (i.e., less than 8%), with a loaded vehicle, or while pulling a trailer, when the system will not activate and slight rolling may occur. This could cause a collision with another vehicle or object. Always remember the driver is responsible for braking the vehicle.

Towing With HSA

HSA will provide assistance when starting on a grade when pulling a trailer.

WARNING!

- **If you use a trailer brake controller with your trailer, your trailer brakes may be activated and deactivated with the brake switch. If so, when the brake pedal is released, there may not be enough brake pressure to hold the vehicle and trailer on a hill and this could cause a collision with another vehicle or object behind you. In order to avoid rolling down the hill while resuming acceleration, manually activate the trailer brake prior to releasing the brake pedal. Always remember the driver is responsible for braking the vehicle.**

(Continued)

WARNING! (Continued)

- **HSA is not a parking brake. If you stop the vehicle on a hill without putting the transmission in PARK and using the parking brake, it will roll down the hill and could cause a collision with another vehicle or object. Always remember to use the parking brake while parking on a hill, and that the driver is responsible for braking the vehicle.**

HSA Off

If you wish to turn off the HSA system, it can be done using the Customer Programmable Features in the Electronic Vehicle Information Center (EVIC). Refer to "Electronic Vehicle Information Center (EVIC)" in "Understanding Your Instrument Panel" for further information.

Ready Alert Braking

Ready Alert Braking may reduce the time required to reach full braking during emergency braking situations. It anticipates when an emergency braking situation may occur by monitoring how fast the throttle is released by the driver. When the throttle is released very quickly, Ready Alert Braking applies a small amount of brake pressure. This brake pressure will not be noticed by the driver. The brake system uses this brake pressure to allow a fast brake response if the driver applies the brakes.

Rain Brake Support

Rain Brake Support may improve braking performance in wet conditions. It will periodically apply a small amount of brake pressure to remove any water buildup on the front brake rotors. It only functions when the windshield wipers are in the LO or HI mode, it does not function in the intermittent mode. When Rain Brake Support is active, there is no notification to the driver and no driver interaction is required.

ESC Activation/Malfunction Indicator Light and ESC OFF Indicator Light

The "ESC Activation/Malfunction Indicator Light" in the instrument cluster will come on when the ignition switch is turned to the ON position. It should go out with the engine running. If the "ESC Activation/Malfunction Indicator Light" comes on continuously with the engine running, a malfunction has been detected in the ESC system. If this light remains on after several ignition cycles, and the vehicle has been driven several miles (kilometers) at speeds greater than 30 mph (48 km/h), see your authorized dealer as soon as possible to have the problem diagnosed and corrected.

The "ESC Activation/Malfunction Indicator Light" (located in the instrument cluster) starts to flash as soon as the tires lose traction and the ESC system becomes active. The "ESC Activation/Malfunction Indicator Light" also flashes when TCS is active. If the "ESC Activation/Malfunction Indicator Light" begins to flash during acceleration, ease up on the accelerator and apply as little throttle as possible. Be sure to adapt your speed and driving to the prevailing road conditions.

NOTE:

- The "ESC Activation/Malfunction Indicator Light" and the "ESC OFF Indicator Light" come on momentarily each time the ignition switch is turned ON.
- Each time the ignition is turned ON, the ESC system will be ON even if it was turned off previously.
- The ESC system will make buzzing or clicking sounds when it is active. This is normal; the sounds will stop when ESC becomes inactive following the maneuver that caused the ESC activation.

The "ESC OFF Indicator Light" indicates the Electronic Stability Control (ESC) is off.

Synchronizing ESC

If the power supply is interrupted (battery disconnected or discharged), the "ESC Activation/Malfunction Indicator Light" may illuminate with the engine running. If this should occur, turn the steering wheel completely to the left and then to the right. The "ESC Activation/ Malfunction Indicator Light" should go out. However, if the light remains on, have the ESC and BAS checked at your authorized dealer as soon as possible.

TIRE SAFETY INFORMATION

Tire Markings

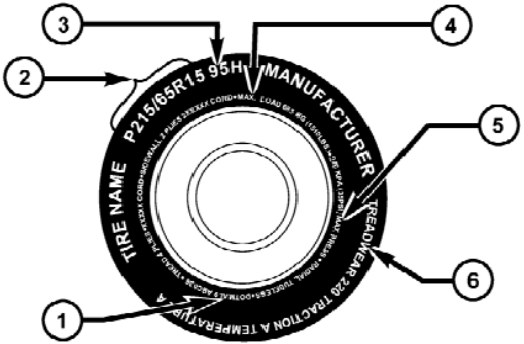

1 — U.S. DOT Safety Standards Code (TIN)	4 — Maximum Load
2 — Size Designation	5 — Maximum Pressure
3 — Service Description	6 — Treadwear, Traction and Temperature Grades

NOTE:

- P (Passenger) - Metric tire sizing is based on U.S. design standards. P-Metric tires have the letter "P" molded into the sidewall preceding the size designation. Example: P215/65R15 95H.
- European-Metric tire sizing is based on European design standards. Tires designed to this standard have the tire size molded into the sidewall beginning with the section width. The letter "P" is absent from this tire size designation. Example: 215/65R15 96H.
- LT (Light Truck) - Metric tire sizing is based on U.S. design standards. The size designation for LT-Metric tires is the same as for P-Metric tires except for the letters "LT" that are molded into the sidewall preceding the size designation. Example: LT235/85R16.
- Temporary spare tires are spares designed for temporary emergency use only. Temporary high pressure compact spare tires have the letter "T" or "S" molded into the sidewall preceding the size designation. Example: T145/80D18 103M.
- High flotation tire sizing is based on U.S. design standards and it begins with the tire diameter molded into the sidewall. Example: 31x10.5 R15 LT.

Tire Sizing Chart

EXAMPLE:
Size Designation:
P = Passenger car tire size based on U.S. design standards **"....blank...."** = Passenger car tire based on European design standards **LT** = Light truck tire based on U.S. design standards **T or S** = Temporary spare tire **31** = Overall diameter in inches (in)
215 = Section width in millimeters (mm)
65 = Aspect ratio in percent (%) — Ratio of section height to section width of tire **10.5** = Section width in inches (in)
R = Construction code — "R" means radial construction — "D" means diagonal or bias construction
15 = Rim diameter in inches (in)

EXAMPLE:
Service Description:
95 = Load Index — A numerical code associated with the maximum load a tire can carry
H = Speed Symbol — A symbol indicating the range of speeds at which a tire can carry a load corresponding to its load index under certain operating conditions — The maximum speed corresponding to the speed symbol should only be achieved under specified operating conditions (i.e., tire pressure, vehicle loading, road conditions, and posted speed limits)
Load Identification:
"....blank...." = Absence of any text on the sidewall of the tire indicates a Standard Load (SL) tire
Extra Load (XL) = Extra load (or reinforced) tire
Light Load (LL) = Light load tire
C, D, E, F, G = Load range associated with the maximum load a tire can carry at a specified pressure
Maximum Load — Maximum load indicates the maximum load this tire is designed to carry
Maximum Pressure — Maximum pressure indicates the maximum permissible cold tire inflation pressure for this tire

Tire Identification Number (TIN)

The TIN may be found on one or both sides of the tire, however, the date code may only be on one side. Tires with white sidewalls will have the full TIN, including the date code, located on the white sidewall side of the tire. Look for the TIN on the outboard side of black sidewall tires as mounted on the vehicle. If the TIN is not found on the outboard side, then you will find it on the inboard side of the tire.

EXAMPLE:
DOT MA L9 ABCD 0301
DOT = Department of Transportation — This symbol certifies that the tire is in compliance with the U.S. Department of Transportation tire safety standards and is approved for highway use
MA = Code representing the tire manufacturing location (two digits)
L9 = Code representing the tire size (two digits)
ABCD = Code used by the tire manufacturer (one to four digits)
03 = Number representing the week in which the tire was manufactured (two digits) —03 means the 3rd week.
01 = Number representing the year in which the tire was manufactured (two digits) —01 means the year 2001 — Prior to July 2000, tire manufacturers were only required to have one number to represent the year in which the tire was manufactured. Example: 031 could represent the 3rd week of 1981 or 1991

Tire Terminology And Definitions

Term	Definition
B-Pillar	The vehicle B-Pillar is the structural member of the body located behind the front door.
Cold Tire Inflation Pressure	Cold tire inflation pressure is defined as the tire pressure after the vehicle has not been driven for at least 3 hours, or driven less than 1 mile (1.6 km) after sitting for a three hour period. Inflation pressure is measured in units of PSI (pounds per square inch) or kPa (kilopascals).
Maximum Inflation Pressure	The maximum inflation pressure is the maximum permissible cold tire inflation pressure for this tire. The maximum inflation pressure is molded into the sidewall.
Recommended Cold Tire Inflation Pressure	Vehicle manufacturer's recommended cold tire inflation pressure as shown on the tire placard.
Tire Placard	A paper label permanently attached to the vehicle describing the vehicle's loading capacity, the original equipment tire sizes and the recommended cold tire inflation pressures.

Tire Loading And Tire Pressure

Tire And Loading Information Placard Location

NOTE: The proper cold tire inflation pressure is listed on the driver's side B-Pillar or the rear edge of the driver's side door.

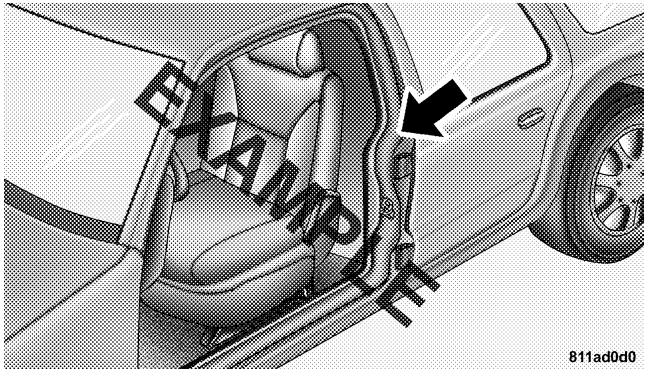

Tire Placard Location

Tire And Loading Information Placard

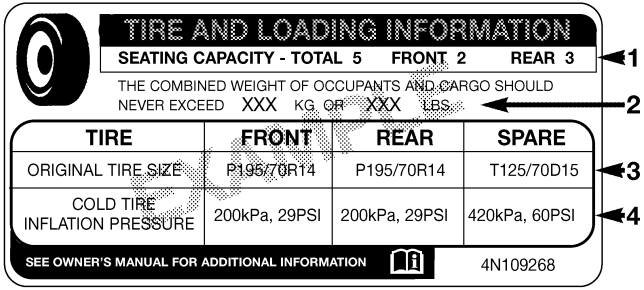

811b5a9a

Tire and Loading Information Placard

This placard tells you important information about the:

1) number of people that can be carried in the vehicle

2) total weight your vehicle can carry

3) tire size designed for your vehicle

4) cold tire inflation pressures for the front, rear, and spare tires.

Loading

The vehicle maximum load on the tire must not exceed the load carrying capacity of the tire on your vehicle. You will not exceed the tire's load carrying capacity if you adhere to the loading conditions, tire size, and cold tire inflation pressures specified on the Tire and Loading Information placard and in the "Vehicle Loading" section of this manual.

NOTE: Under a maximum loaded vehicle condition, gross axle weight ratings (GAWRs) for the front and rear axles must not be exceeded. For further information on GAWRs, vehicle loading, and trailer towing, refer to "Vehicle Loading" in this section.

To determine the maximum loading conditions of your vehicle, locate the statement "The combined weight of occupants and cargo should never exceed XXX lbs or XXX kg" on the Tire and Loading Information placard. The combined weight of occupants, cargo/luggage and trailer tongue weight (if applicable) should never exceed the weight referenced here.

Steps For Determining Correct Load Limit

1. Locate the statement "The combined weight of occupants and cargo should never exceed XXX lbs or XXX kg" on your vehicle's placard.

2. Determine the combined weight of the driver and passengers that will be riding in your vehicle.

3. Subtract the combined weight of the driver and passengers from XXX lbs or XXX kg.

4. The resulting figure equals the available amount of cargo and luggage load capacity. For example, if "XXX" amount equals 1,400 lbs (635 kg) and there will be five 150 lb (68 kg) passengers in your vehicle, the amount of available cargo and luggage load capacity is 650 lbs (295 kg) (since 5 x 150 = 750, and 1400 – 750 = 650 lbs [295 kg]).

5. Determine the combined weight of luggage and cargo being loaded on the vehicle. That weight may not safely exceed the available cargo and luggage load capacity calculated in Step 4.

6. If your vehicle will be towing a trailer, load from your trailer will be transferred to your vehicle. Consult this manual to determine how this reduces the available cargo and luggage load capacity of your vehicle.

NOTE:

- The following table shows examples on how to calculate total load, cargo/luggage, and towing capacities of your vehicle with varying seating configurations and number and size of occupants. This table is for illustration purposes only and may not be accurate for the seating and load carry capacity of your vehicle.
- For the following example, the combined weight of occupants and cargo should never exceed 865 lbs (392 kg).

Occupants			Combined weight of occupants and cargo from Tire Placard	MINUS	Combined Occupant's weight	=	AVAILABLE Cargo/Luggage and Trailer Tongue Weight
TOTAL	FRONT	REAR					
EXAMPLE 1							
5	2	3			Occupant 1: 200 lbs Occupant 2: 130 lbs Occupant 3: 160 lbs Occupant 4: 100 lbs Occupant 5: 80 lbs TOTAL WEIGHT: 670 lbs		
			865 lbs	minus	670 lbs	=	195 lbs
EXAMPLE 2							
3	2	1			Occupant 1: 210 lbs Occupant 2: 180 lbs Occupant 3: 150 lbs TOTAL WEIGHT: 540 lbs		
			865 lbs	minus	540 lbs	=	325 lbs
EXAMPLE 3							
2	2	0			Occupant 1: 200 lbs Occupant 2: 200 lbs TOTAL WEIGHT: 400 lbs		
			865 lbs	minus	400 lbs	=	465 lbs

EXAMPLE

811a4d11

WARNING!

Overloading of your tires is dangerous. Overloading can cause tire failure, affect vehicle handling, and increase your stopping distance. Use tires of the recommended load capacity for your vehicle. Never overload them.

TIRES — GENERAL INFORMATION

Tire Pressure

Proper tire inflation pressure is essential to the safe and satisfactory operation of your vehicle. Three primary areas are affected by improper tire pressure:

Safety

WARNING!

- **Improperly inflated tires are dangerous and can cause collisions.**
- **Under-inflation increases tire flexing and can result in tire over-heating and failure.**
- **Over-inflation reduces a tire's ability to cushion shock. Objects on the road and chuckholes can cause damage that result in tire failure.**
- **Over-inflated or under-inflated tires can affect vehicle handling and can fail suddenly, resulting in loss of vehicle control.**
- **Unequal tire pressures can cause steering problems. You could lose control of your vehicle.**

(Continued)

WARNING! (Continued)

- **Unequal tire pressures from one side of the vehicle to the other can cause the vehicle to drift to the right or left.**
- **Always drive with each tire inflated to the recommended cold tire inflation pressure.**

Economy

Improper inflation pressures can cause uneven wear patterns to develop across the tire tread. These abnormal wear patterns will reduce tread life resulting in a need for earlier tire replacement. Under-inflation also increases tire rolling resistance resulting in higher fuel consumption.

Ride Comfort And Vehicle Stability

Proper tire inflation contributes to a comfortable ride. Over-inflation produces a jarring and uncomfortable ride.

Tire Inflation Pressures

The proper cold tire inflation pressure is listed on the driver's side "B" Pillar or rear edge of the driver's side door.

Some vehicles may have Supplemental Tire Pressure Information for vehicle loads that are less than the maximum loaded vehicle condition. These pressure conditions will be found in the "Supplemental Tire Pressure Information" section of this manual.

The pressure should be checked and adjusted as well as inspecting for signs of tire wear or visible damage at least once a month. Use a good quality pocket-type gauge to check tire pressure. Do not make a visual judgement when determining proper inflation. Radial tires may look properly inflated even when they are under-inflated.

CAUTION!

After inspecting or adjusting the tire pressure, always reinstall the valve stem cap. This will prevent moisture and dirt from entering the valve stem, which could damage the valve stem.

Inflation pressures specified on the placard are always "cold tire inflation pressure." Cold tire inflation pressure is defined as the tire pressure after the vehicle has not been driven for at least three hours, or driven less than 1 mile (1.6 km) after a three hour period. The cold tire inflation pressure must not exceed the maximum inflation pressure molded into the tire sidewall.

Check tire pressures more often if subject to a wide range of outdoor temperatures, as tire pressures vary with temperature changes.

Tire pressures change by approximately 1 psi (7 kPa) per 12°F (7°C) of air temperature change. Keep this in mind when checking tire pressure inside a garage, especially in the Winter.

Example: If garage temperature = 68°F (20°C) and the outside temperature = 32°F (0°C) then the cold tire inflation pressure should be increased by 3 psi (21 kPa), which equals 1 psi (7 kPa) for every 12°F (7°C) for this outside temperature condition.

Tire pressure may increase from 2 to 6 psi (13 to 40 kPa) during operation. DO NOT reduce this normal pressure build up or your tire pressure will be too low.

Tire Pressures For High Speed Operation

The manufacturer advocates driving at safe speeds within posted speed limits. Where speed limits or conditions are such that the vehicle can be driven at high speeds, maintaining correct tire inflation pressure is very important. Increased tire pressure and reduced vehicle loading may be required for high-speed vehicle operation. Refer to original equipment or an authorized tire dealer for recommended safe operating speeds, loading and cold tire inflation pressures.

WARNING!

High speed driving with your vehicle under maximum load is dangerous. The added strain on your tires could cause them to fail. You could have a serious collision. Do not drive a vehicle loaded to the maximum capacity at continuous speeds above 75 mph (120 km/h).

Radial Ply Tires

WARNING!

Combining radial ply tires with other types of tires on your vehicle will cause your vehicle to handle poorly. The instability could cause a collision. Always use radial ply tires in sets of four. Never combine them with other types of tires.

Cuts and punctures in radial tires are repairable only in the tread area because of sidewall flexing. Consult your authorized tire dealer for radial tire repairs.

Spare Tire Matching Original Equipped Tire And Wheel – If Equipped

Your vehicle may be equivalent with a spare tire and wheel in look and function as the original equipment tire and wheel found on the front or rear axle of your vehicle. This spare tire may be used in the tire rotation for your

vehicle. If your vehicle has this option refer to an authorized tire dealer for the recommended tire rotation pattern.

If your vehicle is not equipped with an original equipment tire and wheel as a spare, a non-matching temporary emergency use spare may be equipped with your vehicle. Temporary use spares are engineered to be used only with your vehicle. Your vehicle may be equipped with one of the following types of non-matching temporary use spares; compact, full size, or limited-use. Do not install more than one non-matching temporary use spare tire/wheel on the vehicle at any given time.

CAUTION!

Because of the reduced ground clearance, do not take your vehicle through an automatic car wash with a compact, full size or limited-use temporary spare installed. Damage to the vehicle may result.

Compact Spare Tire – If Equipped

The compact spare is for temporary emergency use only. You can identify if your vehicle is equipped with a compact spare by looking at the spare tire description on the Tire and Loading Information Placard located on the driver's side door opening or on the sidewall of the tire. Compact spare tire descriptions begin with the letter "T" or "S" preceding the size designation. Example: T145/80D18 103M.

T, S = Temporary Spare Tire

Since this tire has limited tread life the original equipment tire should be repaired (or replaced) and reinstalled on your vehicle at the first opportunity.

Do not install a wheel cover or attempt to mount a conventional tire on the compact spare wheel, since the wheel is designed specifically for the compact spare tire. Do not install more than one compact spare tire and wheel on the vehicle at any given time

WARNING!

Compact spares are for temporary emergency use only. With these spares, do not drive more than 50 mph (80 km/h). Temporary use spares have limited tread life. When the tread is worn to the tread wear indicators, the temporary use spare tire needs to be replaced. Be sure to follow the warnings, which apply to your spare. Failure to do so could result in spare tire failure and loss of vehicle control.

Full Size Spare – If Equipped

The full size spare is for temporary emergency use only. This tire may look like the original equipped tire on the front or rear axle of your vehicle, but it is not. This spare tire may have limited tread life. When the tread is worn to the tread wear indicators, the temporary use full size spare tire needs to be replaced. Since it is not the same as your original equipment tire, replace (or repair) the original equipment tire and reinstall on the vehicle at the first opportunity.

Limited-Use Spare – If Equipped

The limited-use spare tire is for temporary emergency use only. This tire is identified by a label located on the limited-use spare wheel. This label contains the driving limitations for this spare. This tire may look like the original equipped tire on the front or rear axle of your vehicle, but it is not. Installation of this limited-use spare tire affects vehicle handling. Since it is not the same as your original equipment tire, replace (or repair) the original equipment tire and reinstall on the vehicle at the first opportunity.

WARNING!

Limited-use spares are for emergency use only. Installation of this limited-use spare tire affects vehicle handling. With this tire, do not drive more than the speed listed on the limit-use spare wheel. Keep inflated to the cold tire inflation pressure listed on your Tire and Loading Information Placard located on the driver's side door opening. Replace (or repair) the original equipment tire at the first opportunity and reinstall it on your vehicle. Failure to do so could result in loss of vehicle control.

Tire Spinning

When stuck in mud, sand, snow, or ice conditions, do not spin your vehicle's wheels faster than 30 mph (48 km/h) or for longer than 30 seconds continuously without stopping when you are stuck.

WARNING!

Fast spinning tires can be dangerous. Forces generated by excessive wheel speeds may cause tire damage or failure. A tire could explode and injure someone. Do not spin your vehicle's wheels faster than 30 mph (48 km/h) or for more than 30 seconds continuously when you are stuck, and do not let anyone near a spinning wheel, no matter what the speed.

Tread Wear Indicators

Tread wear indicators are in the original equipment tires to help you in determining when your tires should be replaced.

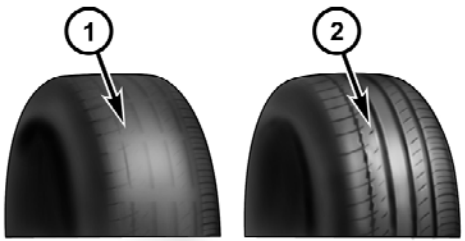

055007576

1 — Worn Tire
2 — New Tire

These indicators are molded into the bottom of the tread grooves. They will appear as bands when the tread depth becomes 1/16 in (2 mm). When the tread is worn to the tread wear indicators, the tire should be replaced.

Life Of Tire

The service life of a tire is dependent upon varying factors including, but not limited to:

- Driving style
- Tire pressure
- Distance driven

WARNING!

Tires and the spare tire should be replaced after six years, regardless of the remaining tread. Failure to follow this warning can result in sudden tire failure. You could lose control and have a collision resulting in serious injury or death.

Keep dismounted tires in a cool, dry place with as little exposure to light as possible. Protect tires from contact with oil, grease, and gasoline.

Replacement Tires

The tires on your new vehicle provide a balance of many characteristics. They should be inspected regularly for wear and correct cold tire inflation pressure. The manufacturer strongly recommends that you use tires equivalent to the originals in size, quality and performance when replacement is needed. (Refer to the paragraph on "Tread Wear Indicators"). Refer to the "Tire and Loading Information" placard for the size designation of your tire. The Load Index and Speed Symbol for your tire will be found on the original equipment tire sidewall. See the Tire Sizing Chart example found in the Tire Safety Information section of this manual for more information relating to the Load Index and Speed Symbol of a tire.

It is recommended to replace the two front tires or two rear tires as a pair. Replacing just one tire can seriously affect your vehicle's handling. If you ever replace a wheel, make sure that the wheel's specifications match those of the original wheels.

It is recommended you contact your original equipment or an authorized tire dealer with any questions you may have on tire specifications or capability. Failure to use equivalent replacement tires may adversely affect the safety, handling, and ride of your vehicle.

WARNING!

- **Do not use a tire, wheel size or rating other than that specified for your vehicle. Some combinations of unapproved tires and wheels may change suspension dimensions and performance characteristics, resulting in changes to steering, handling, and braking of your vehicle. This can cause unpredictable handling and stress to steering and suspension components. You could lose control and have a collision resulting in serious injury or death. Use only the tire and wheel sizes with load ratings approved for your vehicle.**
- **Never use a tire with a smaller load index or capacity, other than what was originally equipped on your vehicle. Using a tire with a smaller load index could result in tire overloading and failure. You could lose control and have a collision.**

(Continued)

WARNING! (Continued)

- **Failure to equip your vehicle with tires having adequate speed capability can result in sudden tire failure and loss of vehicle control.**

CAUTION!

Replacing original tires with tires of a different size may result in false speedometer and odometer readings.

TIRE CHAINS

Use only compact chains or other traction aids that meet SAE type "Class S" specifications. Chains must be the proper size for the vehicle, as recommended by the chain manufacturer. Install tire chains only on P215/65R17 using standard chains, on P225/60R18 and P235/55R18 using model 0143 (tirechaindealer.com) and on P235/55R19 using model Z-575 (scc-chain.com).

NOTE: Do not use tire chains on a compact spare tire.

CAUTION!

To avoid damage to your vehicle or tires, observe the following precautions:

- **Because of restricted chain clearance between tires and other suspension components, it is important that only chains in good condition are used. Broken chains can cause serious damage. Stop the vehicle immediately if noise occurs that could indicate chain breakage. Remove the damaged parts of the chain before further use.**
- **Install chains on the rear wheels as tightly as possible and then retighten after driving about ½ mile (0.8 km).**
- **Do not exceed 30 mph (48 km/h).**

(Continued)

CAUTION! (Continued)

- **Drive cautiously and avoid severe turns and large bumps, especially with a loaded vehicle.**
- **Use on rear wheels only.**
- **Do not drive for prolonged period on dry pavement.**
- **Observe the tire chain manufacturer's instructions on the method of installation, operating speed, and conditions for use. Always use the lower suggested operating speed of the chain manufacturer if different from the speed recommended by the manufacture.**

NOTE: In order to avoid damage to tires, chains, and your vehicle do not drive for a prolonged period on dry pavement. Observe the tire chain manufacturer's instructions on method of installation, operating speed, and conditions for usage.

Always use the lower suggested operating speed if both the chain manufacturer and vehicle manufacturer suggest a maximum speed. This notice applies to all chain traction devices, including link and cable (radial) chains.

SNOW TIRES

Some areas of the country require the use of snow tires during the winter. All season tires can be identified by the M+S designation on the tire sidewall.

If you need snow tires, select tires equivalent in size and type to the original equipment tires. Use snow tires only in sets of four. Failure to do so may adversely affect the safety and handling of your vehicle.

Snow tires generally have lower speed ratings than what was originally equipped with your vehicle and should not be operated at sustained speeds over 75 mph (120 km/h). For speeds above 75 mph (120 km/h) refer to original equipment or an authorized tire dealer for recommended safe operating speeds, loading and cold tire inflation pressures.

While studded tires improve performance on ice, skid and traction capability on wet or dry surfaces may be poorer than that of non-studded tires. Some states prohibit studded tires; therefore, local laws should be checked before using these tire types.

TIRE ROTATION RECOMMENDATIONS

Tires on the front and rear axles of vehicles operate at different loads and perform different steering, driving, and braking functions. For these reasons, they wear at unequal rates.

These effects can be reduced by timely rotation of tires. The benefits of rotation are especially worthwhile with aggressive tread designs such as those on all season type tires. Rotation will increase tread life, help to maintain mud, snow and wet traction levels, and contribute to a smooth, quiet ride.

Refer to the "Maintenance Schedule" for the proper maintenance intervals. The reasons for any rapid or unusual wear should be corrected prior to rotation being performed.

The suggested rotation method is the "forward cross" shown in the following diagram. This rotation pattern does not apply to some directional tires that must not be reversed.

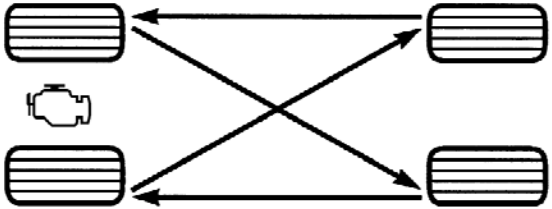

Tire Rotation

TIRE PRESSURE MONITOR SYSTEM (TPMS)

The Tire Pressure Monitor System (TPMS) will warn the driver of a low tire pressure based on the vehicle recommended cold placard pressure.

The tire pressure will vary with temperature by about 1 psi (6.9 kPa) for every 12°F (6.5°C). This means that when the outside temperature decreases, the tire pressure will decrease. Tire pressure should always be set based on cold inflation tire pressure. This is defined as the tire pressure after the vehicle has not been driven for at least three hours, or driven less than 1 mile (1.6 km) after a three hour period. The cold tire inflation pressure must not exceed the maximum inflation pressure molded into the tire sidewall. Refer to "Tires – General Information" in "Starting and Operating" for information on how to properly inflate the vehicle's tires. The tire pressure will also increase as the vehicle is driven - this is normal and there should be no adjustment for this increased pressure.

The TPMS will warn the driver of a low tire pressure if the tire pressure falls below the low-pressure warning limit for any reason, including low temperature effects and natural pressure loss through the tire.

The TPMS will continue to warn the driver of low tire pressure as long as the condition exists, and will not turn off until the tire pressure is at or above the recommended cold placard pressure. Once the low tire pressure warning (Tire Pressure Monitoring [TPM] Telltale Light) illuminates, you must increase the tire pressure to the recommended cold placard pressure in order for the TPM Telltale Light to turn off. The system will automatically update and the TPM Telltale Light will turn off once the system receives the updated tire pressures. The vehicle may need to be driven for up to 20 minutes above 15 mph (24 km/h) in order for the TPMS to receive this information.

For example, your vehicle may have a recommended cold (parked for more than three hours) placard pressure of 30 psi (207 kPa). If the ambient temperature is 68°F (20°C) and the measured tire pressure is 27 psi (186 kPa), a temperature drop to 20°F (-7°C) will decrease the tire pressure to approximately 23 psi (158 kPa). This tire pressure is sufficiently low enough to turn ON the TPM Telltale Light. Driving the vehicle may cause the tire pressure to rise to approximately 27 psi (186 kPa), but the TPM Telltale Light will still be ON. In this situation, the TPM Telltale Light will turn OFF only after the tires are inflated to the vehicle's recommended cold placard pressure value.

CAUTION!

- **The TPMS has been optimized for the original equipment tires and wheels. TPMS pressures and warning have been established for the tire size equipped on your vehicle. Undesirable system operation or sensor damage may result when using replacement equipment that is not of the same size, type, and/or style. Aftermarket wheels can cause sensor damage. Do not use aftermarket tire sealants or balance beads if your vehicle is equipped with a TPMS, as damage to the sensors may result.**
- **After inspecting or adjusting the tire pressure, always reinstall the valve stem cap. This will prevent moisture and dirt from entering the valve stem, which could damage the TPM sensor.**

NOTE:

- The TPMS is not intended to replace normal tire care and maintenance or to provide warning of a tire failure or condition.
- The TPMS should not be used as a tire pressure gauge while adjusting your tire pressure.
- Driving on a significantly under-inflated tire causes the tire to overheat and can lead to tire failure. Under-inflation also reduces fuel efficiency and tire tread life, and may affect the vehicle's handling and stopping ability.
- The TPMS is not a substitute for proper tire maintenance, and it is the driver's responsibility to maintain correct tire pressure using an accurate tire pressure gauge, even if under-inflation has not reached the level to trigger illumination of the TPM Telltale Light.
- Seasonal temperature changes will affect tire pressure, and the TPMS will monitor the actual tire pressure in the tire.

Base System

The Tire Pressure Monitor System (TPMS) uses wireless technology with wheel rim mounted electronic sensors to monitor tire pressure levels. Sensors mounted to each wheel as part of the valve stem transmit tire pressure readings to the receiver module.

NOTE: It is particularly important for you to check the tire pressure in all of the tires on your vehicle monthly and to maintain the proper pressure.

The TPMS consists of the following components:

- Receiver module,
- Four TPM sensors, and
- TPM Telltale Light

The matching full size spare wheel and tire assembly (if equipped) has a TPM sensor. The matching full size spare can be used in place of any of the four road tires. The TPMS will only monitor the pressure in the full size spare when it is used in place of a road tire. Otherwise, a spare with a pressure below the low-pressure limit will not cause the TPM Telltale Light to illuminate or the chime to sound.

Tire Pressure Monitoring Low Pressure Warnings

The TPM Telltale Light will illuminate in the instrument cluster, a "LOW TIRE" message will be displayed and a chime will sound when tire pressure is low in one or more of the four active road tires. Should this occur, you should stop as soon as possible, check the inflation pressure of each tire on your vehicle, and inflate each tire to the vehicle's recommended cold placard pressure value. Once the system receives the updated tire pressures, the system will automatically update and the TPM Telltale Light and "LOW TIRE" message will turn off. The vehicle may need to be driven for up to 20 minutes above 15 mph (24 km/h) in order for the TPMS to receive this information.

Service TPMS Warning

If a system fault is detected, the TPM Telltale Light will flash on and off for 75 seconds and then remain on solid. The system fault will also sound a chime. If the ignition switch is cycled, this sequence will repeat, providing the system fault still exists. The TPM Telltale Light will turn off when the fault condition no longer exists. A system fault can occur due to any of the following:

1. Signal interference due to electronic devices or driving next to facilities emitting the same radio frequencies as the TPM sensors.

2. Installing aftermarket window tinting that contains materials that may block radio wave signals.

3. Accumulation of snow or ice around the wheels or wheel housings.

4. Using tire chains on the vehicle.

5. Using wheels/tires not equipped with TPM sensors.

Vehicles With Full Size Spare

1. The matching full size spare wheel and tire assembly has a TPM sensor that can be monitored by the TPMS.

2. If you install the full size spare in place of a road tire that has a pressure below the low-pressure warning limit, upon the next ignition switch cycle, a chime will sound and the TPM Telltale Light and "LOW TIRE" message will turn ON.

3. Driving the vehicle for up to 20 minutes above 15 mph (24 km/h) will turn off the TPM Telltale Light and "LOW TIRE" message as long as no tire pressure is below the low-pressure warning limit in any of the four active road tires.

Vehicles With Compact Spare

1. The compact spare tire does not have a TPM sensor. Therefore, the TPMS will not monitor the pressure in the compact spare tire.

2. If you install the compact spare tire in place of a road tire that has a pressure below the low-pressure warning limit, upon the next ignition switch cycle, a chime will sound and the TPM Telltale Light and "LOW TIRE" message will turn ON.

3. After driving the vehicle for up to 20 minutes above 15 mph (24 km/h), the "LOW TIRE" message will turn off and the TPM Telltale Light will flash on and off for 75 seconds and then remain on solid.

4. For each subsequent ignition switch cycle, a chime will sound and the TPM Telltale Light will flash on and off for 75 seconds and then remain on solid.

5. Once you repair or replace the original road tire, and reinstall it on the vehicle in place of the compact spare, the TPMS will update automatically and the TPM Telltale Light will turn OFF, as long as no tire pressure is below the low-pressure warning limit in any of the four active road tires. The vehicle may need to be driven for up to 20 minutes above 15 mph (24 km/h) in order for the TPMS to receive this information.

Premium System – If Equipped

The Tire Pressure Monitor System (TPMS) uses wireless technology with wheel rim mounted electronic sensors to monitor tire pressure levels. Sensors mounted to each wheel as part of the valve stem transmit tire pressure readings to the receiver module.

NOTE: It is particularly important for you to check the tire pressure in all of the tires on your vehicle monthly and to maintain the proper pressure.

The TPMS consists of the following components:

- Receiver module,
- Four TPM sensors,
- Various TPMS messages, which display in the Electronic Vehicle Information Center (EVIC), and
- TPM Telltale Light

The matching full size spare wheel and tire assembly (if equipped) has a TPM sensor. The full size spare can be used in place of any of the four road tires. The TPMS will only monitor the pressure in the full size spare tire when it is used in place of a road tire. Otherwise, a spare with a pressure below the low-pressure limit will not cause the TPM Telltale Light to illuminate or the chime to sound.

Tire Pressure Monitoring Low Pressure Warnings

The TPM Telltale Light will illuminate in the instrument cluster and a chime will sound when tire pressure is low in one or more of the four active road tires. In addition, the EVIC will display a "LOW TIRE" message and a graphic showing the pressure values of each tire with the low tire pressure values flashing or changing color.

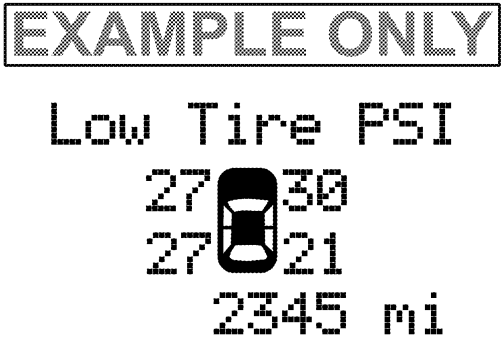

819793fc

Should this occur, you should stop as soon as possible and inflate the tires with a low pressure condition (those flashing or in a different color in the EVIC graphic) to the vehicle's recommended cold placard pressure inflation value. Once the system receives the updated tire pressures, the system will automatically update, the graphic display in the EVIC will stop flashing or change color back to the original color, and the TPM Telltale Light will turn off. The vehicle may need to be driven for up to 20 minutes above 15 mph (24 km/h) in order for the TPMS to receive this information.

Service TPMS Warning

If a system fault is detected, the TPM Telltale Light will flash on and off for 75 seconds and then remain on solid. The system fault will also sound a chime. In addition, the EVIC will display a "SERVICE TPM SYSTEM" message for a minimum of five seconds and then display dashes (--) in place of the pressure value to indicate which sensor is not being received.

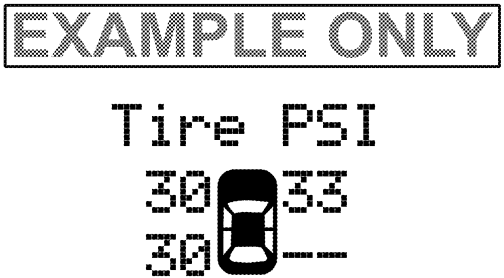

81979401

If the ignition switch is cycled, this sequence will repeat, providing the system fault still exists. If the system fault no longer exists, the TPM Telltale Light will no longer flash, and the "SERVICE TPM SYSTEM" message will no longer display, and a pressure value will display in place of the dashes. A system fault can occur due to any of the following:

1. Signal interference due to electronic devices or driving next to facilities emitting the same radio frequencies as the TPM sensors.

2. Installing aftermarket window tinting that contains materials that may block radio wave signals.

3. Accumulation of snow or ice around the wheels or wheel housings.

4. Using tire chains on the vehicle.

5. Using wheels/tires not equipped with TPM sensors.

The EVIC will also display a "SERVICE TPM SYSTEM" message for a minimum of five seconds when a system fault related to an incorrect sensor location fault is detected. In this case, the "SERVICE TPM SYSTEM" message is then followed with a graphic display with pressure values still shown. This indicates that the pressure values are still being received from the TPM sensors but they may not be located in the correct vehicle

position. The system still needs to be serviced as long as the "SERVICE TPM SYSTEM" message is displayed.

Vehicles With Full Size Spare

1. The matching full size spare wheel and tire assembly has a TPM sensor that can be monitored by the TPMS.

2. If you install the full size spare in place of a road tire that has a pressure below the low-pressure warning limit, upon the next ignition switch cycle, a chime will sound and the TPM Telltale Light will turn ON. In addition, the EVIC will display a low pressure message and a graphic showing the low tire pressure value flashing or in a different color.

3. After driving the vehicle for up to 20 minutes above 15 mph (24 km/h) the TPM Telltale Light will turn OFF, and the pressure value displayed will be updated and stop flashing or return to its original color as long as no tire pressure is below the low-pressure warning limit in any of the four active road tires.

Vehicles With Compact Spare

1. The compact spare tire does not have a TPM sensor. Therefore, the TPMS will not monitor the pressure in the compact spare tire.

2. If you install the compact spare tire in place of a road tire that has a pressure below the low-pressure warning limit, upon the next ignition switch cycle, the TPM Telltale Light will remain ON and a chime will sound. In addition, the graphic in the EVIC will still display a flashing pressure value or a pressure value in a different color.

3. After driving the vehicle for up to 20 minutes above 15 mph (24 km/h), the TPM Telltale Light will flash on and off for 75 seconds and then remain on solid. In addition, the EVIC will display a "SERVICE TPM SYSTEM" message for a minimum of five seconds and then display dashes (- -) in place of the pressure value.

4. For each subsequent ignition switch cycle, a chime will sound, the TPM Telltale Light will flash on and off for 75 seconds and then remain on solid, and the EVIC will display a "SERVICE TPM SYSTEM" message for a minimum of five seconds and then display dashes (- -) in place of the pressure value.

5. Once you repair or replace the original road tire and reinstall it on the vehicle in place of the compact spare, the TPMS will update automatically. In addition, the TPM Telltale Light will turn OFF and the graphic in the EVIC will display a new pressure value instead of dashes (- -), as long as no tire pressure is below the low-pressure warning limit in any of the four active road tires. The vehicle may need to be driven for up to 20 minutes above 15 mph (24 km/h) in order for the TPMS to receive this information.

General Information

This device complies with Part 15 of the FCC rules and RSS 210 of Industry Canada. Operation is subject to the following conditions:

- This device may not cause harmful interference.
- This device must accept any interference received, including interference that may cause undesired operation.

The TPM sensors are regulated under one of the following licenses:

United States MRXC4W4MA4
Canada 2546A-C4W4MA4

FUEL REQUIREMENTS

3.6L Engine – If Equipped

800dfab6

This engine is designed to meet all emissions regulations and provide excellent fuel economy and performance when using high-quality unleaded “regular” gasoline having an octane rating of 87. The use of premium gasoline is not recommended, as it will not provide any benefit over regular gasoline in these engines.

5.7L Engine – If Equipped

800dfab7

This engine is designed to meet all emissions regulations and provide satisfactory fuel economy and performance when using high-quality unleaded gasoline having an octane range of 87 to 89. The manufacturer recommends the use of 89 octane for optimum performance. The use of premium gasoline is not recommended, as it will not provide any benefit over regular gasoline in these engines.

Light spark knock at low engine speeds is not harmful to your engine. However, continued heavy spark knock at high speeds can cause damage and immediate service is required. Poor quality gasoline can cause problems such as hard starting, stalling, and hesitations. If you experience these symptoms, try another brand of gasoline before considering service for the vehicle.

Over 40 auto manufacturers worldwide have issued and endorsed consistent gasoline specifications (the Worldwide Fuel Charter, WWFC) which define fuel properties necessary to deliver enhanced emissions, performance, and durability for your vehicle. The manufacturer recommends the use of gasolines that meet the WWFC specifications if they are available.

Reformulated Gasoline

Many areas of the country require the use of cleaner burning gasoline referred to as "Reformulated Gasoline." Reformulated gasoline contains oxygenates and are specifically blended to reduce vehicle emissions and improve air quality.

The manufacturer supports the use of reformulated gasoline. Properly blended reformulated gasoline will provide excellent performance and durability of engine and fuel system components.

Gasoline/Oxygenate Blends

Some fuel suppliers blend unleaded gasoline with oxygenates such as Ethanol. Fuels blended with oxygenates may be used in your vehicle.

CAUTION!

DO NOT use gasoline containing Methanol or gasoline containing more than 10% Ethanol. Use of these blends may result in starting and driveability problems, damage critical fuel system components, cause emissions to exceed the applicable standard, and/or cause the "Malfunction Indicator Light" to illuminate. Pump labels should clearly communicate if a fuel contains greater than 10% Ethanol.

Problems that result from using gasoline containing Methanol or gasoline containing more than 10% Ethanol are not the responsibility of the manufacturer and may not be covered under warranty.

E-85 Usage In Non-Flex Fuel Vehicles

Non-FFV vehicles are compatible with gasoline containing 10% ethanol (E10). Gasoline with higher ethanol content may void the vehicle's warranty.

If a Non-FFV vehicle is inadvertently fueled with E-85 fuel, the engine will have some or all of these symptoms:

- operate in a lean mode
- OBD II "Malfunction Indicator Light" on
- poor engine performance
- poor cold start and cold driveability
- increased risk for fuel system component corrosion

To fix a Non-FFV vehicle inadvertently fueled once with E-85 perform the following:

- change the engine oil and oil filter
- disconnect and reconnect the battery
- drain the fuel tank (see your authorized dealer)

More extensive repairs will be required for prolonged exposure to E-85 fuel.

MMT In Gasoline

MMT is a manganese-containing metallic additive that is blended into some gasoline to increase octane. Gasoline blended with MMT provides no performance advantage beyond gasoline of the same octane number without MMT. Gasoline blended with MMT reduces spark plug life and reduces emissions system performance in some vehicles. The manufacturer recommends that gasoline without MMT be used in your vehicle. The MMT content of gasoline may not be indicated on the gasoline pump, therefore, you should ask your gasoline retailer whether the gasoline contains MMT. It is even more important to look for gasoline without MMT in Canada, because MMT can be used at levels higher than those allowed in the United States. MMT is prohibited in Federal and California reformulated gasoline.

Materials Added To Fuel

All gasoline sold in the United States is required to contain effective detergent additives. Use of additional detergents or other additives is not needed under normal conditions and they would result in additional cost. Therefore, you should not have to add anything to the fuel.

Fuel System Cautions

CAUTION!

Follow these guidelines to maintain your vehicle's performance:

- **The use of leaded gas is prohibited by Federal law. Using leaded gasoline can impair engine performance and damage the emissions control system.**

(Continued)

CAUTION! (Continued)

- **An out-of-tune engine or certain fuel or ignition malfunctions can cause the catalytic converter to overheat. If you notice a pungent burning odor or some light smoke, your engine may be out of tune or malfunctioning and may require immediate service. Contact your authorized dealer for service assistance.**
- **The use of fuel additives, which are now being sold as octane enhancers, is not recommended. Most of these products contain high concentrations of methanol. Fuel system damage or vehicle performance problems resulting from the use of such fuels or additives is not the responsibility of the manufacturer.**

NOTE: Intentional tampering with the emissions control system can result in civil penalties being assessed against you.

Carbon Monoxide Warnings

WARNING!

Carbon monoxide (CO) in exhaust gases is deadly. Follow the precautions below to prevent carbon monoxide poisoning:

- **Do not inhale exhaust gases. They contain carbon monoxide, a colorless and odorless gas, which can kill. Never run the engine in a closed area, such as a garage, and never sit in a parked vehicle with the engine running for an extended period. If the vehicle is stopped in an open area with the engine running for more than a short period, adjust the ventilation system to force fresh, outside air into the vehicle.**

(Continued)

WARNING! (Continued)

- **Guard against carbon monoxide with proper maintenance. Have the exhaust system inspected every time the vehicle is raised. Have any abnormal conditions repaired promptly. Until repaired, drive with all side windows fully open.**

FLEXIBLE FUEL (3.6L ENGINE ONLY) — IF EQUIPPED

E-85 General Information

The information in this section is for Flexible Fuel vehicles only. These vehicles can be identified by a unique fuel filler door label that states **Ethanol (E-85) or Unleaded Gasoline Only.** This section only covers those subjects that are unique to these vehicles. Please refer to the other sections of this manual for information on features that are common between Flexible Fuel and gasoline-only powered vehicles.

CAUTION!

Only vehicles with the E-85 fuel filler door label can operate on E-85.

81ae46a9

E-85 Badge

Ethanol Fuel (E-85)

E-85 is a mixture of approximately 85% fuel ethanol and 15% unleaded gasoline.

WARNING!

Ethanol vapors are extremely flammable and could cause serious personal injury. Never have any smoking materials lit in or near the vehicle when filling the tank. Do not use E-85 as a cleaning agent and never use it near an open flame.

Fuel Requirements

If your vehicle is E-85 compatible, it will operate on unleaded gasoline with an octane rating of 87, or E-85 fuel, or any mixture of these two fuels.

For best results, a refueling pattern that avoids alternating between E-85 and unleaded gasoline is recommended.

When you do switch fuel types it is recommended that:

- you do not add less than 5 gal (19 L) when refueling
- you drive the vehicle immediately after refueling for at least 5 miles (8 km)

Observing these precautions will avoid possible hard starting and/or significant deterioration in driveability during warm up.

NOTE:

- Use seasonally adjusted E-85 fuel (ASTM D5798). With non-seasonally adjusted E-85 fuel, you may experience hard starting and rough idle following start up even if the above recommendations are followed, especially when the ambient temperature is below 32°F (0°C).
- Some additives used in regular gasoline are not fully compatible with E-85 and may form deposits in your engine. To eliminate driveability issues that may be caused by these deposits, a supplemental gasoline additive, such as MOPAR® Injector Cleanup or Techron may be used.

Selection Of Engine Oil For Flexible Fuel Vehicles (E-85) And Gasoline Vehicles

FFV vehicles operated on E-85 require specially formulated engine oils. These special requirements are included in MOPAR® engine oils, and in equivalent oils meeting Chrysler Specification MS-6395. The manufacturer only recommends engine oils that are API Certified and meet the requirements of Material Standard MS-6395. MS-6395 contains additional requirements, developed during extensive fleet testing, to provide additional protection to Chrysler Group LLC engines. Use MOPAR® or an equivalent oil meeting the specification MS-6395.

Starting

The characteristics of E-85 fuel make it unsuitable for use when ambient temperatures fall below 0°F (-18°C). In the range of 0°F (-18°C) to 32°F (0°C), you may experience an increase in the time it takes for your engine to start, and a deterioration in driveability (sags and/or hesitations) until the engine is fully warmed up.

NOTE: Use of the engine block heater (if equipped) is beneficial for E-85 startability when the ambient temperature is less than 32°F (0°C).

Cruising Range

Because E-85 fuel contains less energy per gallon/liter than gasoline, you will experience an increase in fuel consumption. You can expect your miles per gallon (mpg)/miles per liter and your driving range to decrease by about 30%, compared to gasoline operation.

Replacement Parts

Many components in your Flexible Fuel Vehicle (FFV) are designed to be compatible with ethanol. Always be sure that your vehicle is serviced with correct ethanol compatible parts.

CAUTION!

Replacing fuel system components with non-ethanol compatible components can damage your vehicle.

Maintenance

If you operate the vehicle using E-85 fuel, follow the maintenance schedule section of this manual.

CAUTION!

Do not use ethanol mixture greater than 85% in your vehicle. It will cause difficulty in cold starting and may affect driveability.

ADDING FUEL

1. Press the fuel filler door release switch (located in the driver's door map pocket).

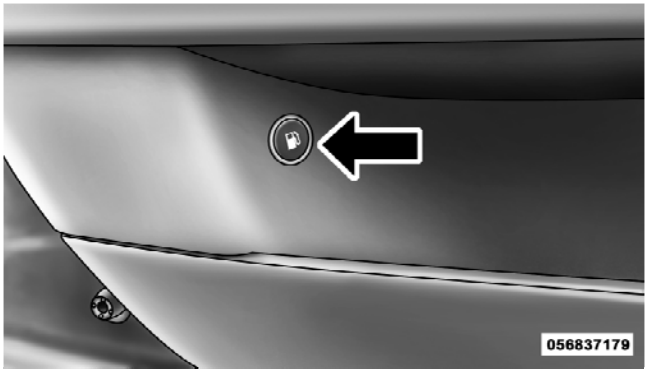

Fuel Filler Door Release Switch

2. Open the fuel filler door.

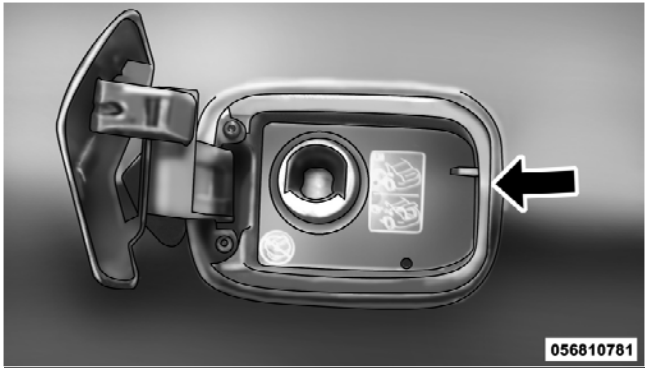

Fuel Filler Door

3. There is no fuel filler cap. A flapper door inside the pipe seals the system.

4. Insert the fuel nozzle fully into the filler pipe – the nozzle opens and holds the flapper door while refueling.

NOTE: Only the correct size nozzle opens the latches allowing the flapper door to open.

5. Fill the vehicle with fuel – when the fuel nozzle "clicks" or shuts off the fuel tank is full.

6. Remove the fuel nozzle and close the fuel door.

NOTE: A funnel is provided (located in the trunk in the spare tire area) to open the flapper door to allow for emergency refueling with a gas can.

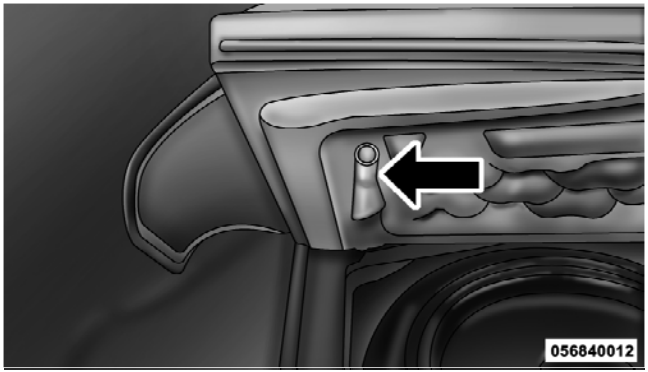

Fuel Funnel

CAUTION!
To avoid fuel spillage and overfilling, do not "top off" the fuel tank after filling.

WARNING!

- **Never have any smoking materials lit in or near the vehicle when the fuel door is open or the tank is being filled.**
- **Never add fuel when the engine is running. This is in violation of most state and federal fire regulations and may cause the "Malfunction Indicator Light" to turn on.**
- **A fire may result if gasoline is pumped into a portable container that is inside of a vehicle. You could be burned. Always place gas containers on the ground while filling.**

Emergency Fuel Filler Door Release

If you are unable to open the fuel filler door, use the fuel filler door emergency release.

1. Open the trunk.

2. Remove the access cover (located on the left side inner trim panel).

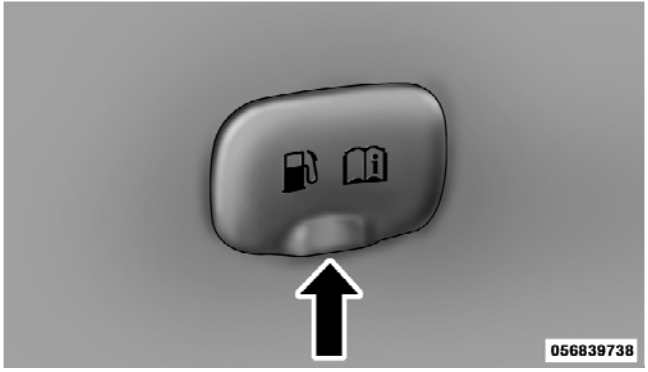

Access Cover

3. Pull the release cable.

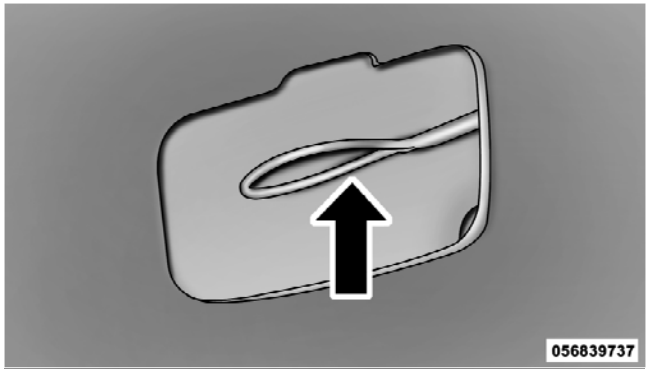

Release Cable

VEHICLE LOADING

The load carrying capacity of your vehicle is shown on the "Vehicle Certification Label." This information should be used for passenger and luggage loading as indicated.

Do not exceed the specified Gross Vehicle Weight Rating (GVWR) or the Gross Axle Weight Rating (GAWR).

Vehicle Certification Label

Your vehicle has a Vehicle Certification Label affixed to the rear of the driver's door.

The label contains the following information:

- Name of manufacturer
- Month and year of manufacture
- Gross Vehicle Weight Rating (GVWR)
- Gross Axle Weight Rating (GAWR) front
- Gross Axle Weight Rating (GAWR) rear
- Vehicle Identification Number (VIN)
- Type of Vehicle
- Month Day and Hour of Manufacture (MDH)

The bar code allows a computer scanner to read the VIN.

Gross Vehicle Weight Rating (GVWR)

The GVWR is the total allowable weight of your vehicle. This includes driver, passengers, and cargo. The total load must be limited so that you do not exceed the GVWR.

Gross Axle Weight Rating (GAWR)

The GAWR is the maximum capacity of the front and rear axles. Distribute the load over the front and rear axles evenly. Make sure that you do not exceed either front or rear GAWR.

WARNING!

Because the front wheels steer the vehicle, it is important that you do not exceed the maximum front or rear GAWR. A dangerous driving condition can result if either rating is exceeded. You could lose control of the vehicle and have a collision.

Overloading

The load carrying components (axle, springs, tires, wheels, etc.) of your vehicle will provide satisfactory service as long as you do not exceed the GVWR and the front and rear GAWR.

The best way to figure out the total weight of your vehicle is to weigh it when it is fully loaded and ready for operation. Weigh it on a commercial scale to ensure that it is not over the GVWR.

Figure out the weight on the front and rear of the vehicle separately. It is important that you distribute the load evenly over the front and rear axles.

Overloading can cause potential safety hazards and shorten useful service life. Heavier axles or suspension components do not necessarily increase the vehicle's GVWR.

Loading

To load your vehicle properly, first figure out its empty weight, axle-by-axle and side-by-side. Store heavier items down low and be sure you distribute their weight as evenly as possible. Stow all loose items securely before driving. If weighing the loaded vehicle shows that you have exceeded either GAWR, but the total load is within the specified GVWR, you must redistribute the weight. Improper weight distribution can have an adverse effect on the way your vehicle steers and handles and the way the brakes operate.

NOTE:

- Refer to the "Vehicle Certification Label" affixed to the rear of the driver's door for your vehicle's GVWR and GAWRs.
- Refer to the "Tire Placard" for your vehicle's proper tire pressure.

TRAILER TOWING

In this section, you will find safety tips and information on limits to the type of towing you can reasonably do with your vehicle. Before towing a trailer, carefully review this information to tow your load as efficiently and safely as possible.

To maintain warranty coverage, follow the requirements and recommendations in this manual concerning vehicles used for trailer towing.

Common Towing Definitions

The following trailer towing related definitions will assist you in understanding the following information:

Gross Vehicle Weight Rating (GVWR)

The GVWR is the total allowable weight of your vehicle. This includes driver, passengers, cargo, and tongue weight. The total load must be limited so that you do not exceed the GVWR. Refer to "Vehicle Loading/Vehicle Certification Label" in "Starting and Operating" for further information.

Gross Trailer Weight (GTW)
The GTW is the weight of the trailer plus the weight of all cargo, consumables, and equipment (permanent or temporary) loaded in or on the trailer in its "loaded and ready for operation" condition.

The recommended way to measure GTW is to put your fully loaded trailer on a vehicle scale. The entire weight of the trailer must be supported by the scale.

Gross Combination Weight Rating (GCWR)
The GCWR is the total permissible weight of your vehicle and trailer when weighed in combination.

NOTE: The GCWR rating includes a 150 lbs (68 kg) allowance for the presence of a driver.

Gross Axle Weight Rating (GAWR)
The GAWR is the maximum capacity of the front and rear axles. Distribute the load over the front and rear axles evenly. Make sure that you do not exceed either front or rear GAWR. Refer to "Vehicle Loading/Vehicle Certification Label" in "Starting and Operating" for further information.

WARNING!

It is important that you do not exceed the maximum front or rear GAWR. A dangerous driving condition can result if either rating is exceeded. You could lose control of the vehicle and have a collision.

Tongue Weight (TW)
The tongue weight is the downward force exerted on the hitch ball by the trailer. In most cases, it should not be less than 10% or more than 15% of the trailer load. You must consider this as part of the load on your vehicle.

Frontal Area
The frontal area is the maximum height multiplied by the maximum width of the front of a trailer.

Trailer Sway Control

The trailer sway control is a telescoping link that can be installed between the hitch receiver and the trailer tongue that typically provides adjustable friction associated with the telescoping motion to dampen any unwanted trailer swaying motions while traveling.

Weight-Carrying Hitch

A weight-carrying hitch supports the trailer tongue weight, just as if it were luggage located at a hitch ball or some other connecting point of the vehicle. These kinds of hitches are the most popular on the market today and they are commonly used to tow small- and medium-sized trailers.

Weight-Distributing Hitch

A weight-distributing system works by applying leverage through spring (load) bars. They are typically used for heavier loads to distribute trailer tongue weight to the tow vehicle's front axle and the trailer axle(s). When used in accordance with the manufacturer's directions, it provides for a more level ride, offering more consistent steering and brake control thereby enhancing towing safety. The addition of a friction / hydraulic sway control also dampens sway caused by traffic and crosswinds and contributes positively to tow vehicle and trailer stability. Trailer sway control and a weight distributing (load equalizing) hitch are recommended for heavier Tongue Weights (TW) and may be required depending on vehicle and trailer configuration / loading to comply with Gross Axle Weight Rating (GAWR) requirements.

WARNING!

- **An improperly adjusted weight distributing hitch system may reduce handling, stability, braking performance, and could result in a collision.**

(Continued)

WARNING! (Continued)

- **Weight distributing systems may not be compatible with surge brake couplers. Consult with your hitch and trailer manufacturer or a reputable recreational vehicle dealer for additional information.**

Trailer Hitch Classification

Your vehicle may be factory equipped for safe towing of trailers weighing over 2,000 lbs (907 kg) with the optional Trailer Tow Prep Package. See your authorized dealer for package content.

The following chart provides the industry standard for the maximum trailer weight a given trailer hitch class can tow and should be used to assist you in selecting the correct trailer hitch for your intended towing condition. Refer to the "Trailer Towing Weights (Maximum Trailer Weight Ratings)" chart for the Maximum GTW towable for your given drivetrain.

Trailer Hitch Classification Definitions	
Class	**Max. Trailer Hitch Industry Standards**
Class I - Light Duty	2,000 lbs (907 kg)
Class II - Medium Duty	3,500 lbs (1 587 kg)
Class III - Heavy Duty	5,000 lbs (2 268 kg)
Class IV - Extra Heavy Duty	10,000 lbs (4 540 kg)
Refer to the "Trailer Towing Weights (Maximum Trailer Weight Ratings)" chart for the Maximum Gross Trailer Weight (GTW) towable for your given drivetrain.	

All trailer hitches should be professionally installed on your vehicle.

Trailer Towing Weights (Maximum Trailer Weight Ratings)

The following chart provides the maximum trailer weight ratings towable for your given drivetrain.

Engine/Transmission	Frontal Area	Max. GTW (Gross Trailer Wt.)	Max. Tongue Wt. (See Note)
3.6L Automatic	22 sq ft (2.04 sq m)	1,000 lbs (454 kg)	100 lbs (45 kg)
5.7L Automatic	32 sq ft (2.97 sq m)	1,000 lbs (454 kg)	100 lbs (45 kg)
Refer to local laws for maximum trailer towing speeds			
NOTE: The trailer tongue weight must be considered as part of the combined weight of occupants and cargo, and it should never exceed the weight referenced on the "Tire and Loading Information" placard. Refer to "Tire Safety Information" in "Starting and Operating" for further information.			

Trailer And Tongue Weight

Always load a trailer with 60% to 65% of the weight in the front of the trailer. This places 10% to 15% of the Gross Trailer Weight (GTW) on the tow hitch of your vehicle. Loads balanced over the wheels or heavier in the rear can cause the trailer to sway **severely** side to side which will cause loss of control of the vehicle and trailer. Failure to load trailers heavier in front is the cause of many trailer collisions.

Never exceed the maximum tongue weight stamped on your bumper or trailer hitch.

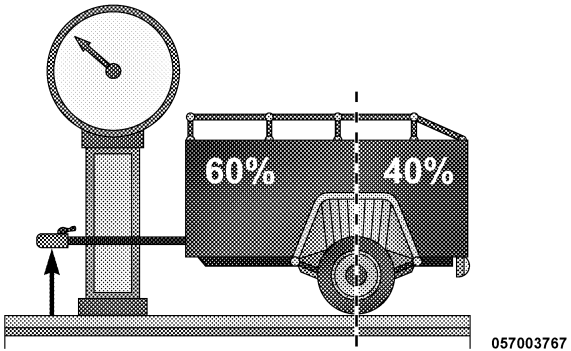

Consider the following items when computing the weight on the rear axle of the vehicle:

- The tongue weight of the trailer.
- The weight of any other type of cargo or equipment put in or on your vehicle.
- The weight of the driver and all passengers.

NOTE: Remember that everything put into or on the trailer adds to the load on your vehicle. Also, additional factory-installed options or dealer-installed options must be considered as part of the total load on your vehicle. Refer to the "Tire and Loading Information" placard for the maximum combined weight of occupants and cargo for your vehicle.

Towing Requirements

To promote proper break-in of your new vehicle drive-train components the following guidelines are recommended:

CAUTION!

- **Do not tow a trailer at all during the first 500 miles (805 km) the new vehicle is driven. The engine, axle or other parts could be damaged.**

(Continued)

CAUTION! (Continued)

- **Then, during the first 500 miles (805 km) that a trailer is towed, do not drive over 50 mph (80 km/h) and do not make starts at full throttle. This helps the engine and other parts of the vehicle wear in at the heavier loads.**

WARNING!

Improper towing can lead to an injury collision. Follow these guidelines to make your trailer towing as safe as possible:

- **Make certain that the load is secured in the trailer and it will not shift during travel. When trailering cargo that is not fully secured, dynamic load shifts can occur that may be difficult for the driver to control. You could lose control of your vehicle and have a collision.**

(Continued)

WARNING! (Continued)

- **When hauling cargo or towing a trailer, do not overload your vehicle or trailer. Overloading can cause a loss of control, poor performance, or damage to brakes, axle, engine, transmission, steering, suspension, chassis structure, or tires.**
- **Safety chains must always be used between your vehicle and trailer. Always connect the chains to the frame or hook retainers of the vehicle hitch. Cross the chains under the trailer tongue and allow enough slack for turning corners.**
- **Vehicles with trailers should not be parked on a grade. When parking, apply the parking brake on the tow vehicle. Put the tow vehicle automatic transmission in PARK. Always, block or "chock" the trailer wheels.**
- **GCWR must not be exceeded.**

(Continued)

WARNING! (Continued)

- **Total weight must be distributed between the tow vehicle and the trailer such that the following four ratings are not exceeded:**

  1. Max loading as defined on the "Tire and Loading Information" placard.

  2. GTW

  3. GAWR

  4. Tongue weight rating for the trailer hitch utilized. (This requirement may limit the ability to always achieve the 10% to 15% range of tongue weight as a percentage of total trailer weight.)

Towing Requirements – Tires

– Do not attempt to tow a trailer while using a compact spare tire.

– Proper tire inflation pressures are essential to the safe and satisfactory operation of your vehicle. Refer to "Tires – General Information" in "Starting and Operating" for information on tire pressures and for proper tire inflation procedures.

– Check the trailer tires for proper tire inflation pressures before trailer usage.

– Check for signs of tire wear or visible tire damage before towing a trailer. Refer to "Tires – General Information" in "Starting and Operating" for information on tread wear indicators and for the proper inspection procedure.

– When replacing tires, refer to "Tires – General Information" in "Starting and Operating" for information on replacement tires and for the proper tire replacement procedures. Replacing tires with a higher load carrying capacity will not increase the vehicle's GVWR and GAWR limits.

Towing Requirements – Trailer Brakes

– Do **not** interconnect the hydraulic brake system or vacuum system of your vehicle with that of the trailer. This could cause inadequate braking and possible personal injury.

– An electronically actuated trailer brake controller is required when towing a trailer with electronically actuated brakes. When towing a trailer equipped with a hydraulic surge actuated brake system, an electronic brake controller is not required.

– Trailer brakes are recommended for trailers over 1,000 lbs (454 kg) and required for trailers in excess of 2,000 lbs (907 kg).

CAUTION!

If the trailer weighs more than 1,000 lbs (454 kg) loaded, it should have its own brakes, and they should be of adequate capacity. Failure to do this could lead to accelerated brake lining wear, higher brake pedal effort, and longer stopping distances.

WARNING!

- **Do not connect trailer brakes to your vehicle's hydraulic brake lines. It can overload your brake system and cause it to fail. You might not have brakes when you need them and could have an collision.**

(Continued)

WARNING! (Continued)

- **Towing any trailer will increase your stopping distance. When towing, you should allow for additional space between your vehicle and the vehicle in front of you. Failure to do so could result in a collision.**

Towing Requirements – Trailer Lights And Wiring

Whenever you pull a trailer, regardless of the trailer size, stoplights and turn signals on the trailer are required for motoring safety.

The Trailer Tow Package may include a four and seven-pin wiring harness. Use a factory approved trailer harness and connector.

NOTE: Do not cut or splice wiring into the vehicles wiring harness.

The wiring harness is not installed when leaving the factory; it must be done by the dealer or customer. Refer to the following illustrations.

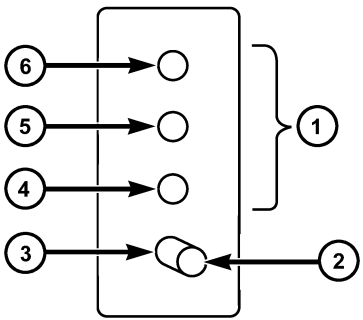

057003766

Four-Pin Connector

1 — Female Pins	4 — Park
2 — Male Pin	5 — Left Stop/Turn
3 — Ground	6 — Right Stop/Turn

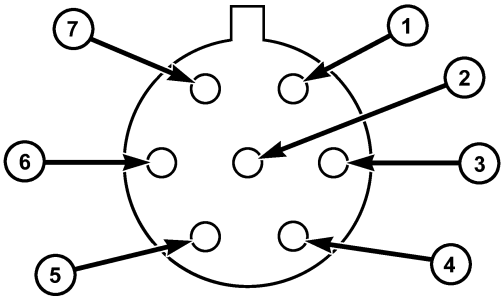

057003765

Seven-Pin Connector

1 — Battery	5 — Ground
2 — Backup Lamps	6 — Left Stop/Turn
3 — Right Stop/Turn	7 — Running Lamps
4 — Electric Brakes	

Towing Tips

Before setting out on a trip, practice turning, stopping, and backing up the trailer in an area located away from heavy traffic.

Automatic Transmission

The DRIVE range can be selected when towing. However, if frequent shifting occurs while in this range, select a lower gear range using the AutoStick® shift control (if equipped).

NOTE: Selecting a lower gear range while operating the vehicle under heavy operating conditions will improve performance and extend transmission life by reducing excessive shifting and heat buildup. This action will also provide better engine braking.

If you REGULARLY tow a trailer for more than 45 minutes of continuous operation, then change the automatic transmission fluid and filter according to the interval specified for "police, taxi, fleet, or frequent trailer towing." Refer to "Maintenance Schedule" for the proper maintenance intervals.

Electronic Speed Control – If Equipped

- Do not use in hilly terrain or with heavy loads.
- When using the speed control, if you experience speed drops greater than 10 mph (16 km/h), disengage until you can get back to cruising speed.
- Use speed control in flat terrain and with light loads to maximize fuel efficiency.

AutoStick® – If Equipped

- By using the AutoStick® mode and selecting a specific gear range, frequent shifting can be avoided. Select the highest gear range that allows for adequate performance and avoids frequent downshifts.

– Extended driving at high RPM should be avoided to prevent excess heat generation. A reduction in vehicle speed may be required to avoid extended driving at high RPM. Return to a higher gear range or vehicle speed when road conditions and RPM level allows.

Cooling System
To reduce potential for engine and transmission overheating, take the following actions:

– *City Driving*
When stopped for short periods of time, shift the transmission into NEUTRAL and increase engine idle speed.

– *Highway Driving*
Reduce speed.

– *Air Conditioning*
Turn off temporarily.

RECREATIONAL TOWING (BEHIND MOTORHOME, ETC.)

Two-Wheel Drive and All-Wheel Drive

Recreational towing (with all four wheels on the ground, or using a tow dolly) is **NOT ALLOWED**. The only acceptable method for towing this vehicle (behind another vehicle) is on a vehicle trailer with all four wheels **OFF** the ground.

CAUTION!

Towing this vehicle in violation of the above requirements can cause severe transmission and/or transfer case damage. Such damage is not covered by the New Vehicle Limited Warranty.

WHAT TO DO IN EMERGENCIES

CONTENTS

- Hazard Warning Flashers 448
- If Your Engine Overheats 448
- Jacking And Tire Changing 449
  - Jack Location/Spare Tire Stowage 450
  - Preparations For Jacking 452
  - Jacking And Changing A Tire 453
  - Road Tire Installation 458
- Jump-Starting Procedures 458
  - Preparations For Jump-Start 459
  - Jump-Starting Procedure 460
- Freeing A Stuck Vehicle 462
- Shift Lever Override — 5 Speed Transmission 464
- Manual Park Release — 8 Speed Transmission (3.6L Engine) 465
- Towing A Disabled Vehicle 467
  - Without The Ignition Key Fob 469

HAZARD WARNING FLASHERS

The Hazard Warning flasher switch is located in the center of the instrument panel between the center air outlets.

Press the switch to turn on the Hazard Warning flashers. When the switch is activated, all directional turn signals will flash on and off to warn oncoming traffic of an emergency. Press the switch a second time to turn off the Hazard Warning flashers.

This is an emergency warning system and it should not be used when the vehicle is in motion. Use it when your vehicle is disabled and it is creating a safety hazard for other motorists.

When you must leave the vehicle to seek assistance, the Hazard Warning flashers will continue to operate even though the ignition is placed in the OFF position.

NOTE: With extended use the Hazard Warning flashers may wear down your battery.

IF YOUR ENGINE OVERHEATS

In any of the following situations, you can reduce the potential for overheating by taking the appropriate action.

- On the highways — slow down.
- In city traffic — while stopped, place the transmission in NEUTRAL, but do not increase the engine idle speed.

NOTE: There are steps that you can take to slow down an impending overheat condition:

- If your air conditioner (A/C) is on, turn it off. The A/C system adds heat to the engine cooling system and turning the A/C off can help remove this heat.
- You can also turn the temperature control to maximum heat, the mode control to floor and the blower control to high. This allows the heater core to act as a supplement to the radiator and aids in removing heat from the engine cooling system.

CAUTION!

Driving with a hot cooling system could damage your vehicle. If the temperature gauge reads "H," pull over and stop the vehicle. Idle the vehicle with the air conditioner turned off until the pointer drops back into the normal range. If the pointer remains on the "H," turn the engine off immediately and call for service.

WARNING!

You or others can be badly burned by hot engine coolant (antifreeze) or steam from your radiator. If you see or hear steam coming from under the hood, do not open the hood until the radiator has had time to cool. Never try to open a cooling system pressure cap when the radiator or coolant bottle is hot.

JACKING AND TIRE CHANGING

WARNING!

- **Do not attempt to change a tire on the side of the vehicle close to moving traffic. Pull far enough off the road to avoid the danger of being hit when operating the jack or changing the wheel.**
- **Being under a jacked-up vehicle is dangerous. The vehicle could slip off the jack and fall on you. You could be crushed. Never put any part of your body under a vehicle that is on a jack. If you need to get under a raised vehicle, take it to a service center where it can be raised on a lift.**
- **Never start or run the engine while the vehicle is on a jack.**

(Continued)

WARNING! (Continued)

- **The jack is designed to be used as a tool for changing tires only. The jack should not be used to lift the vehicle for service purposes. The vehicle should be jacked on a firm level surface only. Avoid ice or slippery areas.**

Jack Location/Spare Tire Stowage

The jack and spare tire are both stowed under an access cover in the trunk. Follow these steps to access the jack and spare tire.

NOTE: The spare tire must be removed in order to access the jack.

1. Open the trunk.
2. Lift the access cover using the pull strap.

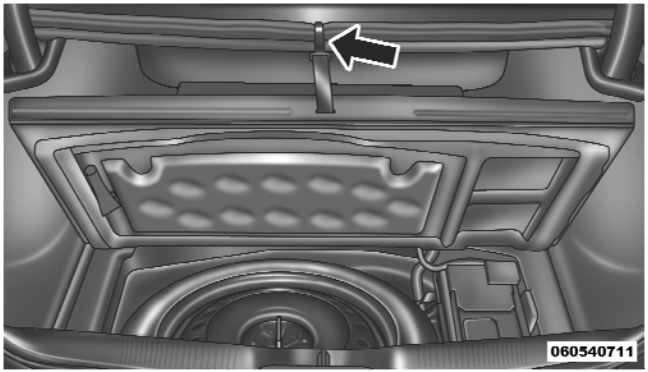

Opening The Access Panel

3. Remove the fastener securing the spare tire.

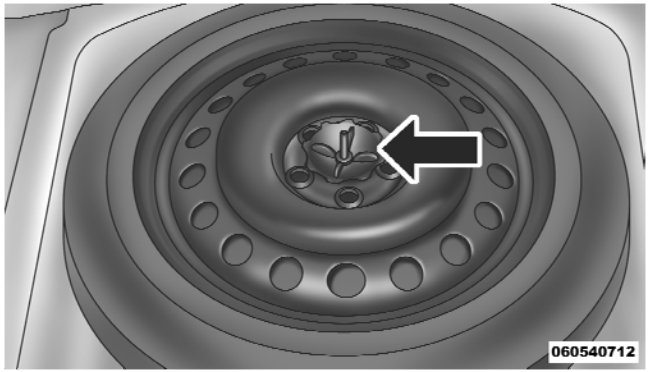

Spare Tire Fastener

4. Remove the spare tire.

5. Remove the fastener securing the jack.

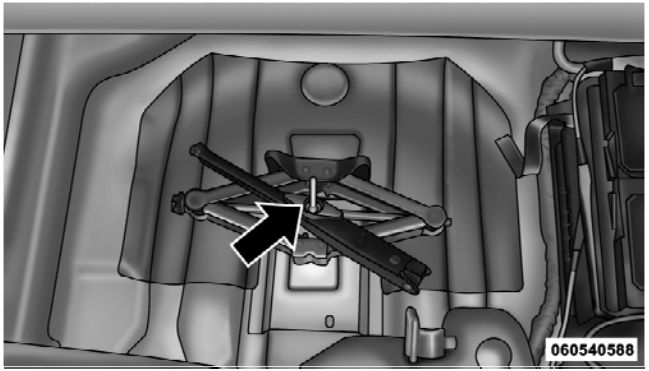

Jack Fastener

6. Remove the scissors jack and lug wrench from the spare wheel as an assembly. Turn the jack screw to the left to loosen the lug wrench, and remove the wrench from the jack assembly.

WARNING!

- **A loose tire or jack thrown forward in a collision or hard stop could endanger the occupants of the vehicle. Always stow the jack parts and the spare tire in the places provided.**
- **Have the deflated (flat) tire repaired or replaced immediately.**

Preparations For Jacking

1. Park the vehicle on a firm, level surface as far from the edge of the roadway as possible. Avoid icy or slippery areas.

WARNING!

Do not attempt to change a tire on the side of the vehicle close to moving traffic, pull far enough off the road to avoid being hit when operating the jack or changing the wheel.

2. Turn on the Hazard Warning flasher.
3. Set the parking brake.
4. Place the shift lever into PARK.
5. Turn OFF the ignition.

6. Block the front and rear of the wheel diagonally opposite of the jacking position. For example, if changing the right front tire, block the left rear wheel.

NOTE: Passengers should not remain in the vehicle when the vehicle is being jacked.

Jacking And Changing A Tire

WARNING!

Carefully follow these tire changing warnings to help prevent personal injury or damage to your vehicle:

- **Always park on a firm, level surface as far from the edge of the roadway as possible before raising the vehicle.**
- **Turn on the Hazard Warning flasher.**
- **Block the wheel diagonally opposite the wheel to be raised.**
- **Set the parking brake firmly and set an automatic transmission in PARK; a manual transmission in REVERSE.**
- **Never start or run the engine with the vehicle on a jack.**

(Continued)

WARNING! (Continued)

- **Do not let anyone sit in the vehicle when it is on a jack.**
- **Do not get under the vehicle when it is on a jack.**
- **Only use the jack in the positions indicated and for lifting this vehicle during a tire change.**
- **If working on or near a roadway, be extremely careful of motor traffic.**

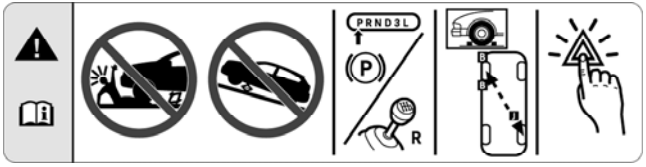

Jack Warning Label

CAUTION!

Do not attempt to raise the vehicle by jacking on locations other than those indicated in the Jacking Instructions for this vehicle.

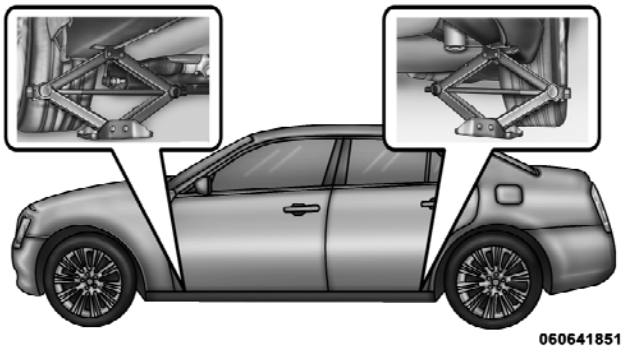

Jacking Locations

1. Remove the spare tire, jack, and lug wrench.

2. If equipped with aluminum wheels where the center cap covers the lug nuts, use the lug wrench to pry the center cap off carefully before raising the vehicle.

3. Before raising the vehicle, use the lug wrench to loosen, but not remove, the lug nuts on the wheel with the flat tire. Turn the lug nuts counterclockwise one turn while the wheel is still on the ground.

4. Place the jack underneath the lift area that is closest to the flat tire. Turn the jack screw clockwise to firmly engage the jack saddle with the lift area of the sill flange.

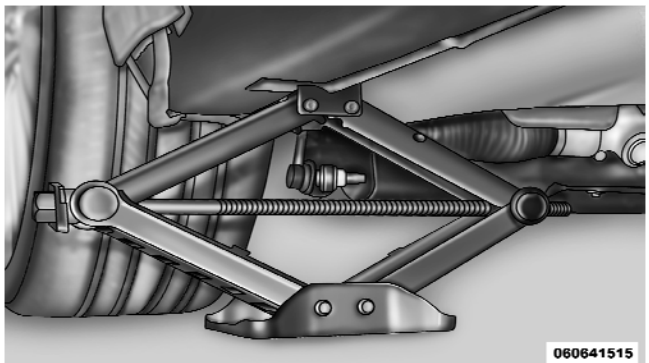

Front Jacking Location

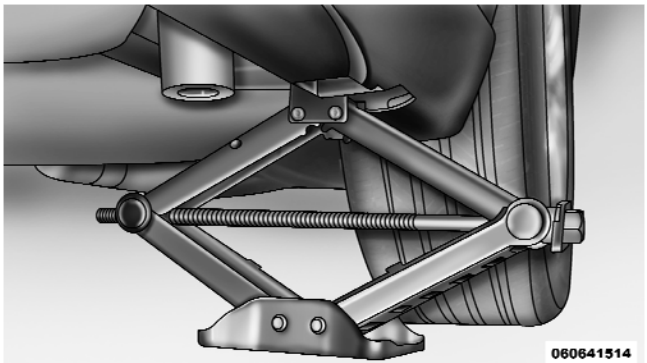

Rear Jacking Location

5. Raise the vehicle just enough to remove the flat tire and install the spare tire.

WARNING!

Raising the vehicle higher than necessary can make the vehicle less stable. It could slip off the jack and hurt someone near it. Raise the vehicle only enough to remove the tire.

6. Remove the lug nuts and tire.
7. Mount the spare tire.

CAUTION!

Be sure to mount the spare tire with the valve stem facing outward. The vehicle could be damaged if the spare tire is mounted incorrectly.

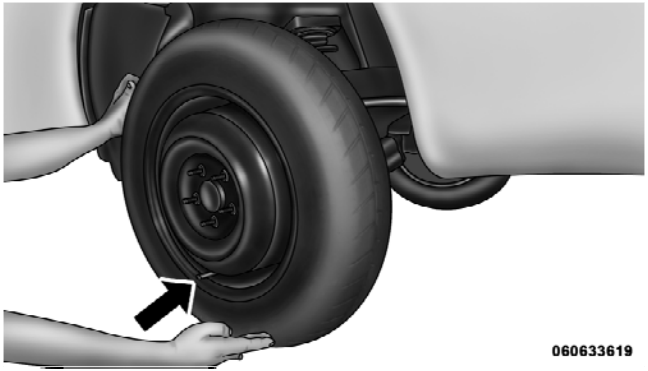

Mounting Spare Tire

NOTE:

- For vehicles so equipped, do not attempt to install a center cap or wheel cover on the compact spare.

- Refer to "Compact Spare Tire" and to "Limited-Use Spare" under "Tires—General Information" in "Starting and Operating" for additional warnings, cautions, and information about the spare tire, its use, and operation.

8. Install the lug nuts with the cone shaped end of the lug nut toward the wheel. Lightly tighten the lug nuts.

WARNING!

To avoid the risk of forcing the vehicle off the jack, do not tighten the wheel nuts fully until the vehicle has been lowered. Failure to follow this warning may result in personal injury.

9. Lower the vehicle to the ground by turning the jack handle counterclockwise.

10. Finish tightening the lug nuts. Push down on the wrench while at the end of the handle for increased leverage. Tighten the lug nuts in a star pattern until each nut has been tightened twice. The correct tightness of each lug nut is 110 ft/lb. (150 N·m). If in doubt about the correct tightness, have them checked with a torque wrench by your authorized dealer or at a service station.

11. Stow the jack, tools and flat tire. Make sure the base of the jack faces the front of the vehicle before tightening down the fastener.

WARNING!

- **A loose tire or jack thrown forward in a collision or hard stop could endanger the occupants of the vehicle. Always stow the jack parts and the spare tire in the places provided.**
- **Have the deflated (flat) tire repaired or replaced immediately.**

Road Tire Installation

1. Mount the road tire on the axle.

2. Install the remaining lug nuts with the cone shaped end of the nut toward the wheel. Lightly tighten the lug nuts.

WARNING!

To avoid the risk of forcing the vehicle off the jack, do not tighten the wheel nuts fully until the vehicle has been lowered. Failure to follow this warning may result in personal injury.

3. Lower the vehicle to the ground by turning the jack handle counterclockwise.

4. Finish tightening the lug nuts. Push down on the wrench while at the end of the handle for increased leverage. Tighten the lug nuts in a star pattern until each nut has been tightened twice. The correct tightness of each lug nut is 110 ft/lbs (150 N·m). If in doubt about the correct tightness, have them checked with a torque wrench by your authorized dealer or service station.

5. After 25 miles (40 km) check the lug nut torque with a torque wrench to ensure that all lug nuts are properly seated against the wheel.

JUMP-STARTING PROCEDURES

If your vehicle has a discharged battery it can be jump-started using a set of jumper cables and a battery in another vehicle or by using a portable battery booster pack. Jump-starting can be dangerous if done improperly so please follow the procedures in this section carefully.

NOTE: When using a portable battery booster pack follow the manufacturer's operating instructions and precautions.

CAUTION!

Do not use a portable battery booster pack or any other booster source with a system voltage greater than 12 Volts or damage to the battery, starter motor, alternator or electrical system may occur.

WARNING!

Do not attempt jump-starting if the battery is frozen. It could rupture or explode and cause personal injury.

Preparations For Jump-Start

The battery is stored under an access cover in the trunk. Remote battery posts are located on the right side of the engine compartment for jump-starting.

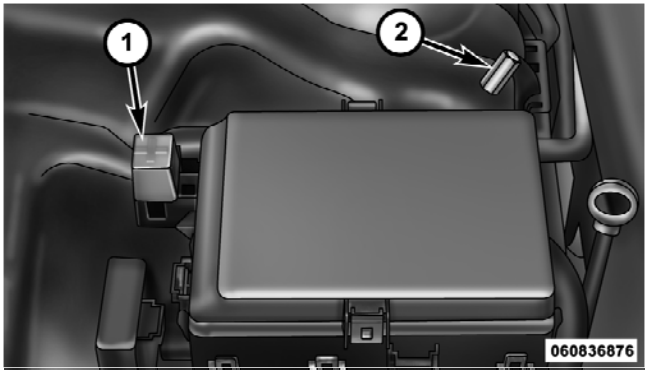

1 — Remote Positive **(+) Post**
2 — Remote Negative **(-) Post**

Remote Battery Posts

WARNING!

- **Take care to avoid the radiator cooling fan whenever the hood is raised. It can start anytime the ignition switch is on. You can be injured by moving fan blades.**
- **Remove any metal jewelry such as watch bands or bracelets that might make an inadvertent electrical contact. You could be seriously injured.**
- **Batteries contain sulfuric acid that can burn your skin or eyes and generate hydrogen gas which is flammable and explosive. Keep open flames or sparks away from the battery.**

1. Set the parking brake, shift the automatic transmission into PARK and turn the ignition to LOCK.

2. Turn off the heater, radio, and all unnecessary electrical accessories.

3. If using another vehicle to jump-start the battery, park the vehicle within the jumper cables reach, set the parking brake and make sure the ignition is OFF.

WARNING!

Do not allow vehicles to touch each other as this could establish a ground connection and personal injury could result.

Jump-Starting Procedure

WARNING!

Failure to follow this procedure could result in personal injury or property damage due to battery explosion.

CAUTION!

Failure to follow these procedures could result in damage to the charging system of the booster vehicle or the discharged vehicle.

1. Connect the positive **(+)** end of the jumper cable to the remote positive **(+)** post of the discharged vehicle.

2. Connect the opposite end of the positive **(+)** jumper cable to the positive **(+)** post of the booster battery.

3. Connect the negative end **(-)** of the jumper cable to the negative **(-)** post of the booster battery.

4. Connect the opposite end of the negative **(-)** jumper cable to the remote negative **(-)** post of the vehicle with the discharged battery.

WARNING!

Do not connect the cable to the negative post (-) of the discharged battery. The resulting electrical spark could cause the battery to explode and could result in personal injury.

5. Start the engine in the vehicle that has the booster battery, let the engine idle a few minutes, and then start the engine in the vehicle with the discharged battery.

Once the engine is started, remove the jumper cables in the reverse sequence:

6. Disconnect the negative **(-)** jumper cable from the remote negative **(-)** post of the vehicle with the discharged battery.

7. Disconnect the negative end **(-)** of the jumper cable from the negative **(-)** post of the booster battery.

8. Disconnect the positive **(+)** jumper cable from the positive **(+)** post of the booster battery.

9. Disconnect the positive **(+)** end of the jumper cable from the remote positive **(+)** post of the discharged vehicle.

If frequent jump-starting is required to start your vehicle you should have the battery and charging system inspected at your authorized dealer.

CAUTION!

Accessories that can be plugged into the vehicle power outlets draw power from the vehicle's battery, even when not in use (i.e., cellular phones, etc.). Eventually, if plugged in long enough, the vehicle's battery will discharge sufficiently to degrade battery life and/or prevent the engine from starting.

FREEING A STUCK VEHICLE

If your vehicle becomes stuck in mud, sand, or snow, it can often be moved by a rocking motion. Turn your steering wheel right and left to clear the area around the front wheels. Then shift back and forth between DRIVE and REVERSE. Using minimal accelerator pedal pressure to maintain the rocking motion, without spinning the wheels, is most effective.

CAUTION!

Racing the engine or spinning the wheels may lead to transmission overheating and failure. Allow the engine to idle with the shift lever in NEUTRAL for at least one minute after every five rocking-motion cycles. This will minimize overheating and reduce the risk of transmission failure during prolonged efforts to free a stuck vehicle.

NOTE: Turn off the Electronic Stability Program (ESP) — if equipped, or Traction Control System (TCS) — if equipped before rocking the vehicle. Refer to "Electronic Brake Control" in "Starting And Operating" for further information.

CAUTION!

- **When "rocking" a stuck vehicle by moving between DRIVE and REVERSE, do not spin the wheels faster than 15 mph (24 km/h), or drivetrain damage may result.**
- **Revving the engine or spinning the wheels too fast may lead to transmission overheating and failure. It can also damage the tires. Do not spin the wheels above 30 mph (48 km/h) while in gear (no transmission shifting occurring).**

WARNING!

Fast spinning tires can be dangerous. Forces generated by excessive wheel speeds may cause damage, or even failure, of the axle and tires. A tire could explode and injure someone. Do not spin your vehicle's wheels faster than 30 mph (48 km/h) or for longer than 30 seconds continuously without stopping when you are stuck and do not let anyone near a spinning wheel, no matter what the speed.

SHIFT LEVER OVERRIDE — 5 SPEED TRANSMISSION

If a malfunction occurs and the shift lever cannot be moved out of the PARK position, you can use the following procedure to temporarily move the shift lever:

1. Firmly apply the parking brake.

2. Remove the rubber tray from the storage bin located to the right of the shift lever. The override access port is near the bottom of the bin to the right of the shift lever gate.

3. Turn the engine OFF.

4. Press and maintain firm pressure on the brake pedal.

5. Using a screwdriver or similar tool, press and hold the override tab through the access port on the center console.

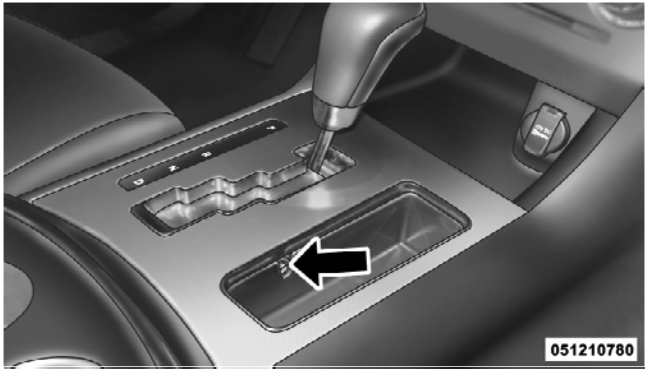

Shift Lever Override

6. Move the shift lever to the NEUTRAL position.

7. The vehicle may then be started in NEUTRAL.

8. Reinstall the rubber tray in the storage bin.

MANUAL PARK RELEASE — 8 SPEED TRANSMISSION (3.6L Engine)

WARNING!

Always secure your vehicle by fully applying the parking brake, before activating the Manual Park Release. Activating the Manual Park Release will allow your vehicle to roll away if it is not secured by the parking brake or by proper connection to a tow vehicle. Activating the Manual Park Release on an unsecured vehicle could lead to serious injury or death for those in or around the vehicle.

In order to push or tow the vehicle in cases where the transmission will not shift out of PARK (such as a dead battery), a Manual Park Release is available.

Follow these steps to use the Manual Park Release:

NOTE: To prevent the vehicle from rolling unintentionally, firmly apply the parking brake.

1. Remove the console storage bin to access the Manual Park Release lever.

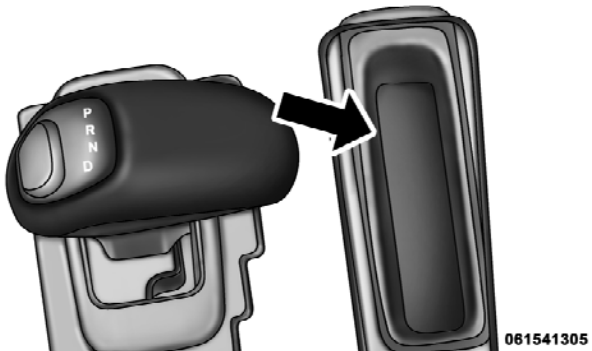

Console Storage Bin

2. Using a small screwdriver or similar tool, fish the tether strap up through the opening in the console base.

3. Insert the screwdriver into the slot in the center of the lever, and disengage the spring steel lever locking tab by pushing it to the right.

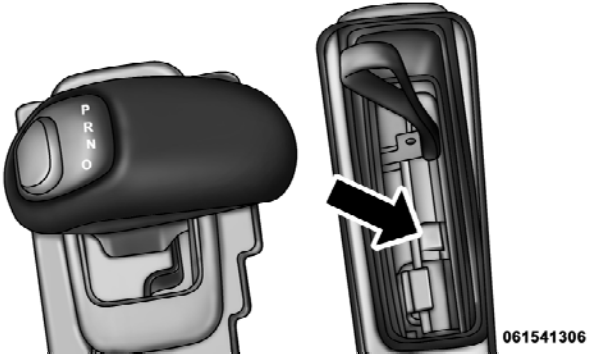

Locking Tab

4. While holding the locking tab in the disengaged position, pull the tether strap to rotate the lever up and rearward, until it locks in place in the vertical position. The vehicle is now out of PARK and can be towed. Release the parking brake only when the vehicle is securely connected to a tow vehicle.

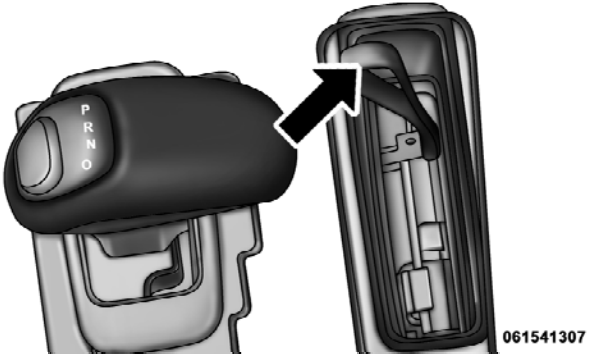

Tether Strap

To Reset The Manual Park Release:

1. Push the latch (at the base of the lever, on the rear side) rearward (away from the lever) to unlatch the lever.

2. Rotate the Manual Park Release lever forward and down, to its original position, until the locking tab snaps into place to secure the lever.

3. Pull up gently on the tether strap to confirm that the lever is locked in its stowed position.

4. Tuck the tether strap into the base of the console. Reinstall the console storage bin.

TOWING A DISABLED VEHICLE

Towing Condition	Wheels OFF the Ground	RWD MODELS	AWD MODELS
Flat Tow	NONE	IF Transmission is operable: • Transmission in **NEUTRAL** • 30 mph (48 km/h)**max** speed • 15 mi (24 km) **max** distance (5-speed trans) • 30 mi (48 km) **max** distance (8-speed trans)	**NOT ALLOWED**
Wheel Lift	Front		**NOT ALLOWED**
	Rear	OK	Trans in **NEUTRAL**
Flatbed	**ALL**	**BEST METHOD**	BEST METHOD

Proper towing or lifting equipment is required to prevent damage to your vehicle. Use only tow bars and other equipment designed for the purpose, following equipment manufacturer's instructions. Use of safety chains is mandatory. Attach a tow bar or other towing device to main structural members of the vehicle, not to bumpers or associated brackets. State and local laws applying to vehicles under tow must be observed.

If you must use the accessories (wipers, defrosters, etc.) while being towed, the ignition must be in the ON/RUN position, not the ACC position.

If the vehicle's battery is discharged, see "Manual Park Release" or "Shift Lever Override" in "What To Do In Emergencies" for instructions on shifting the automatic transmission out of the PARK position for towing.

CAUTION!

- **Do not use sling type equipment when towing. Damage to the fascia will occur.**
- **When securing the vehicle to a flatbed truck, do not attach to the front or rear suspension components. Damage to your vehicle may result from improper towing.**
- **Do not push or tow this vehicle with another vehicle as damage to the bumper fascia and transmission may result.**
- **The manufacturer does not recommend that you tow this vehicle on a tow dolly. Vehicle damage may occur.**

Flatbed towing is recommended. **DO NOT** tow an AWD vehicle with the rear wheels on the ground.

If the transmission is operable, vehicles WITHOUT AWD may be towed (with rear wheels on the ground) under the following conditions:

- The shift lever must be in NEUTRAL.
- The towing speed must not exceed 30 mph (48 km/h).
- The towing distance must not exceed 15 miles (24 km) for 5-speed transmission, or 30 miles (48 km) for 8-speed transmission.

If the transmission is not operable, or the vehicle must be towed faster than 30 mph (48 km/h) or farther than 15 miles (24 km) for 5-speed transmission, or 30 miles (48 km) for 8-speed transmission, tow with the rear wheels OFF the ground (on a flatbed, or with the rear wheels raised using a wheel lift and the transmission in NEUTRAL).

CAUTION!

Failure to follow these towing methods can cause severe transmission damage. Such damage is not covered by the New Vehicle Limited Warranty.

Vehicles equipped with AWD can be towed with the transmission in NEUTRAL and the rear wheels OFF the ground with no limitation on speed or distance.

Without The Ignition Key Fob

Special care must be taken when the vehicle is towed with the ignition in the OFF position. The only approved method of towing without the ignition key fob is with a flatbed truck. Proper towing equipment is necessary to prevent damage to the vehicle.

MAINTAINING YOUR VEHICLE

CONTENTS

- Engine Compartment — 3.6L 473
- Engine Compartment — 5.7L 474
- Onboard Diagnostic System — OBD II 475
- Emissions Inspection And Maintenance Programs 475
- Replacement Parts 477
- Dealer Service 477
- Maintenance Procedures 478
  - Engine Oil 479
  - Engine Oil Filter 482
  - Engine Air Cleaner Filter 482
  - Maintenance-Free Battery 483
  - Air Conditioner Maintenance 485
  - A/C Air Filter 486
  - Body Lubrication 488
  - Windshield Wiper Blades 488
  - Adding Washer Fluid 489
  - Exhaust System 489

- Cooling System 492
- Brake System 497
- Automatic Transmission 499
- All Wheel Drive (AWD) – If Equipped 501
- Rear Axle 502
- Appearance Care And Protection From Corrosion 502

■ Fuses 508
- Integrated Power Module 508
- Rear Power Distribution Center 511

■ Vehicle Storage 516

■ Replacement Bulbs 516

■ Bulb Replacement 517
- Low Beam Headlamp, High Beam Headlamp, Park/Turn Lamp, Inner Park Lamp, And Outer Park Lamp 517
- Rear Backup Lamp And Turn Signal Lamps . . 519
- License Lamp 520

■ Fluid Capacities 521

■ Fluids, Lubricants, And Genuine Parts 522
- Engine 522
- Chassis 523

ENGINE COMPARTMENT — 3.6L

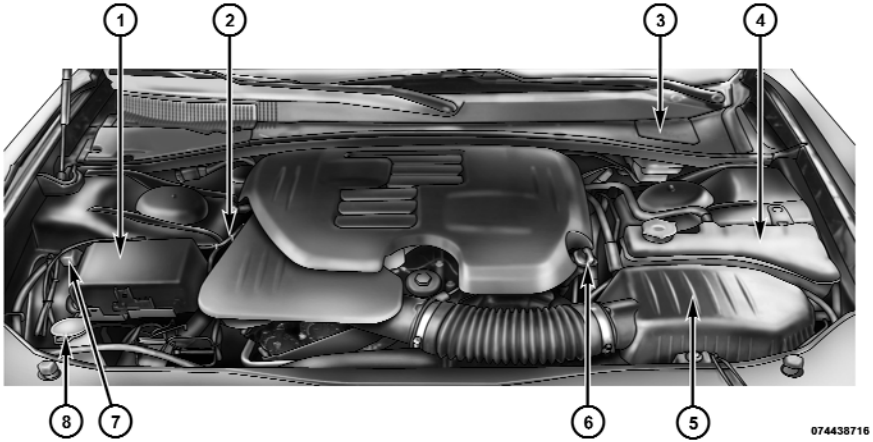

1 — Integrated Power Module (Fuses)
2 — Engine Oil Dipstick
3 — Brake Fluid Reservoir Access Cover
4 — Engine Coolant Reservoir
5 — Air Cleaner Filter
6 — Engine Oil Fill
7 — Remote Jump Start (Positive Battery Post)
8 — Washer Fluid Reservoir

ENGINE COMPARTMENT — 5.7L

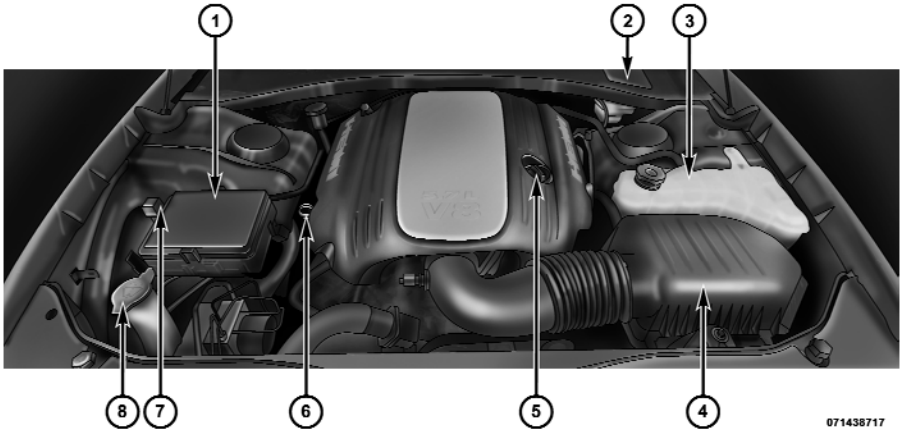

1 — Integrated Power Module (Fuses)
2 — Brake Fluid Reservoir Access Cover
3 — Engine Coolant Reservoir
4 — Air Cleaner Filter
5 — Engine Oil Fill
6 — Engine Oil Dipstick
7 — Remote Jump Start (Positive Battery Post)
8 — Washer Fluid Reservoir

ONBOARD DIAGNOSTIC SYSTEM — OBD II

Your vehicle is equipped with a sophisticated onboard diagnostic system called OBD II. This system monitors the performance of the emissions, engine, and automatic transmission control systems. When these systems are operating properly, your vehicle will provide excellent performance and fuel economy, as well as engine emissions well within current government regulations.

If any of these systems require service, the OBD II system will turn on the "Malfunction Indicator Light (MIL)." It will also store diagnostic codes and other information to assist your service technician in making repairs. Although your vehicle will usually be drivable and not need towing, see your authorized dealer for service as soon as possible.

CAUTION!

- **Prolonged driving with the MIL on could cause further damage to the emissions control system. It could also affect fuel economy and driveability. The vehicle must be serviced before any emissions tests can be performed.**
- **If the MIL is flashing while the engine is running, severe catalytic converter damage and power loss will soon occur. Immediate service is required.**

EMISSIONS INSPECTION AND MAINTENANCE PROGRAMS

In some localities, it may be a legal requirement to pass an inspection of your vehicle's emissions control system. Failure to pass could prevent vehicle registration.

For states that require an Inspection and Maintenance (I/M), this check verifies the "Malfunction

Indicator Light (MIL)" is functioning and is not on when the engine is running, and that the OBD II system is ready for testing.

Normally, the OBD II system will be ready. The OBD II system may **not** be ready if your vehicle was recently serviced, recently had a dead battery or a battery replacement. If the OBD II system should be determined not ready for the I/M test, your vehicle may fail the test.

Your vehicle has a simple ignition key-actuated test, which you can use prior to going to the test station. To check if your vehicle's OBD II system is ready, you must do the following:

1. Turn the ignition switch to the ON position, but do not crank or start the engine.

2. If you crank or start the engine, you will have to start this test over.

3. As soon as you turn the ignition switch to the ON position, you will see the MIL symbol come on as part of a normal bulb check.

4. Approximately 15 seconds later, one of two things will happen:

   a. The MIL will flash for about 10 seconds and then return to being fully illuminated until you turn OFF the ignition or start the engine. This means that your vehicle's OBD II system is **not ready** and you should **not** proceed to the I/M station.

   b. The MIL will not flash at all and will remain fully illuminated until you turn OFF the ignition or start the engine. This means that your vehicle's OBD II system is **ready** and you can proceed to the I/M station.

If your OBD II system is **not ready,** you should see your authorized dealer or repair facility. If your vehicle was recently serviced or had a battery failure or replacement,

you may need to do nothing more than drive your vehicle as you normally would in order for your OBD II system to update. A recheck with the above test routine may then indicate that the system is now ready.

Regardless of whether your vehicle's OBD II system is ready or not, if the MIL is illuminated during normal vehicle operation you should have your vehicle serviced before going to the I/M station. The I/M station can fail your vehicle because the MIL is on with the engine running.

REPLACEMENT PARTS

Use of genuine MOPAR® parts for normal/scheduled maintenance and repairs is highly recommended to ensure the designed performance. Damage or failures caused by the use of non-MOPAR® parts for maintenance and repairs will not be covered by the manufacturer's warranty.

DEALER SERVICE

Your authorized dealer has the qualified service personnel, special tools, and equipment to perform all service operations in an expert manner. Service Manuals are available which include detailed service information for your vehicle. Refer to these Service Manuals before attempting any procedure yourself.

NOTE: Intentional tampering with emissions control systems may void your warranty and could result in civil penalties being assessed against you.

WARNING!

You can be badly injured working on or around a motor vehicle. Only do service work for which you have the knowledge and the proper equipment. If you have any doubt about your ability to perform a service job, take your vehicle to a competent mechanic.

MAINTENANCE PROCEDURES

The pages that follow contain the **required** maintenance services determined by the engineers who designed your vehicle.

Besides those maintenance items specified in the fixed maintenance schedule, there are other components which may require servicing or replacement in the future.

CAUTION!

- **Failure to properly maintain your vehicle or perform repairs and service when necessary could result in more costly repairs, damage to other components or negatively impact vehicle performance. Immediately have potential malfunctions examined by an authorized Chrysler Group LLC dealership or qualified repair center.**

(Continued)

CAUTION! (Continued)

- **Your vehicle has been built with improved fluids that protect the performance and durability of your vehicle and also allow extended maintenance intervals. Do not use chemical flushes in these components as the chemicals can damage your engine, transmission, power steering or air conditioning. Such damage is not covered by the New Vehicle Limited Warranty. If a flush is needed because of component malfunction, use only the specified fluid for the flushing procedure.**

Engine Oil

Checking Oil Level – 3.6L Engine

To assure proper engine lubrication, the engine oil must be maintained at the correct level. Check the oil level at regular intervals, such as every fuel stop. The best time to check the engine oil level is about five minutes after a fully warmed engine is shut off.

Checking the oil while the vehicle is on level ground will improve the accuracy of the oil level readings. Maintain the oil level between the MIN and MAX markings on the dipstick. Adding 1.0 qt (1.0 L) of oil when the reading is at the MIN mark will result in a MAX reading on these engines.

CAUTION!

Overfilling or underfilling will cause oil aeration or loss of oil pressure. This could damage your engine.

Checking Oil Level – 5.7L Engine

To assure proper engine lubrication, the engine oil must be maintained at the correct level. Check the oil level at regular intervals, such as every fuel stop. The best time to check the engine oil level is about five minutes after a fully warmed engine is shut off.

Checking the oil while the vehicle is on level ground will improve the accuracy of the oil level readings. Maintain the oil level in the “SAFE” range. Adding 1.0 qt (1.0 L) of oil when the reading is at the bottom of the “SAFE” range will result in an oil level at the top of the “SAFE” range on these engines.

CAUTION!

Overfilling or underfilling will cause oil aeration or loss of oil pressure. This could damage your engine.

Change Engine Oil

The oil change indicator system will remind you that it is time to take your vehicle in for scheduled maintenance. Refer to the "Maintenance Schedule" for further information.

NOTE: Under no circumstances should oil change intervals exceed 8,000 miles (13 000 km) or six months, whichever occurs first.

Engine Oil Selection

For best performance and maximum protection under all types of operating conditions, the manufacturer only recommends engine oils that are API Certified and meet the requirements of Chrysler Material Standard MS-6395.

American Petroleum Institute (API) Engine Oil Identification Symbol

This symbol means that the oil has been certified by the American Petroleum Institute (API). The manufacturer only recommends API Certified engine oils.

CAUTION!

Do not use chemical flushes in your engine oil as the chemicals can damage your engine. Such damage is not covered by the New Vehicle Limited Warranty.

Engine Oil Viscosity (SAE Grade) – 3.6L Engine
SAE 5W-30 engine oil is recommended for all operating temperatures.

The engine oil filler cap also shows the recommended engine oil viscosity for your engine. For information on engine oil filler cap location, refer to "Engine Compartment" in "Maintaining Your Vehicle" for further information.

Lubricants that do not have both, the engine oil certification mark and the correct SAE viscosity grade number should not be used.

Engine Oil Viscosity (SAE Grade) – 5.7L Engine
SAE 5W-20 engine oil is recommended for all operating temperatures. This engine oil improves low temperature starting and vehicle fuel economy.

The engine oil filler cap also shows the recommended engine oil viscosity for your engine. For information on engine oil filler cap location, refer to "Engine Compartment" in "Maintaining Your Vehicle" for further information.

NOTE: Vehicles equipped with a 5.7L engine must use SAE 5W-20 oil. Failure to do so may result in improper operation of the Multi-Displacement System (MDS). Refer to "Multi-Displacement System" in "Starting and Operating" for further information.

Lubricants that do not have both, the engine oil certification mark and the correct SAE viscosity grade number should not be used.

Synthetic Engine Oils
You may use synthetic engine oils provided the recommended oil quality requirements are met, and the recommended maintenance intervals for oil and filter changes are followed.

Materials Added To Engine Oil
Do not add any supplemental materials, other than leak detection dyes, to the engine oil. Engine oil is an engineered product and its performance may be impaired by supplemental additives.

Disposing Of Used Engine Oil And Oil Filters

Care should be taken in disposing of used engine oil and oil filters from your vehicle. Used oil and oil filters, indiscriminately discarded, can present a problem to the environment. Contact your authorized dealer, service station, or governmental agency for advice on how and where used oil and oil filters can be safely discarded in your area.

Engine Oil Filter

The engine oil filter should be replaced with a new filter at every engine oil change.

Engine Oil Filter Selection

This manufacturer's engines have a full-flow type oil filter. Use a filter of this type for replacement. The quality of replacement filters varies considerably. Only high quality filters should be used to assure most efficient service. MOPAR® engine oil filters are a high quality oil filter and are recommended.

Engine Air Cleaner Filter

Refer to the "Maintenance Schedule" for the proper maintenance intervals.

WARNING!

The air induction system (air cleaner, hoses, etc.) can provide a measure of protection in the case of engine backfire. Do not remove the air induction system (air cleaner, hoses, etc.) unless such removal is necessary for repair or maintenance. Make sure that no one is near the engine compartment before starting the vehicle with the air induction system (air cleaner, hoses, etc.) removed. Failure to do so can result in serious personal injury.

Engine Air Cleaner Filter Selection

The quality of replacement engine air cleaner filters varies considerably. Only high quality filters should be used to assure most efficient service. MOPAR® engine air cleaner filters are a high quality filter and are recommended.

Maintenance-Free Battery

Your vehicle is equipped with a maintenance-free battery. You will never have to add water, nor is periodic maintenance required.

NOTE: The battery is stored under an access cover in the trunk. Remote battery terminals are located in the engine compartment for jump starting. Refer to "Jump-Starting Procedures" in "What To Do In Emergencies" for further information.

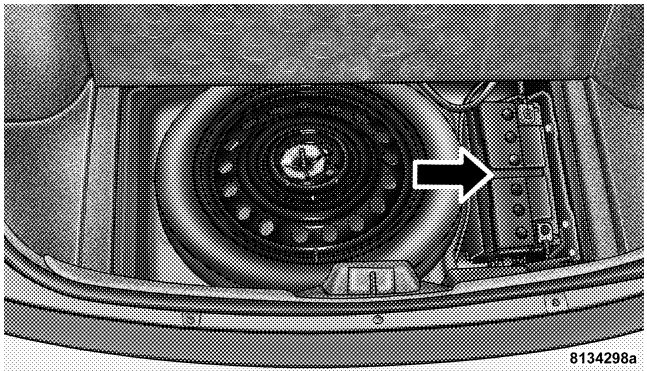

Battery Location

WARNING!

- **Battery fluid is a corrosive acid solution and can burn or even blind you. Do not allow battery fluid to contact your eyes, skin, or clothing. Do not lean over a battery when attaching clamps. If acid splashes in eyes or on skin, flush the area immediately with large amounts of water.**
- **Battery gas is flammable and explosive. Keep flame or sparks away from the battery. Do not use a booster battery or any other booster source with an output greater than 12 Volts. Do not allow cable clamps to touch each other.**
- **Battery posts, terminals, and related accessories contain lead and lead compounds. Wash hands after handling.**

WARNING! (Continued)

- **The battery in this vehicle has a vent hose that should not be disconnected and should only be replaced with a battery of the same type (vented).**

CAUTION!

- **It is essential when replacing the cables on the battery that the positive cable is attached to the positive post and the negative cable is attached to the negative post. Battery posts are marked positive (+) and negative (-) and are identified on the battery case. Cable clamps should be tight on the terminal posts and free of corrosion.**
- **If a "fast charger" is used while the battery is in the vehicle, disconnect both vehicle battery cables before connecting the charger to the battery. Do not use a "fast charger" to provide starting voltage.**

Air Conditioner Maintenance

For best possible performance, your air conditioner should be checked and serviced by an authorized dealer at the start of each warm season. This service should include cleaning of the condenser fins and a performance test. Drive belt tension should also be checked at this time.

CAUTION!

Do not use chemical flushes in your air conditioning system as the chemicals can damage your air conditioning components. Such damage is not covered by the New Vehicle Limited Warranty.

WARNING!

- **Use only refrigerants and compressor lubricants approved by the manufacturer for your air conditioning system. Some unapproved refrigerants are flammable and can explode, injuring you. Other unapproved refrigerants or lubricants can cause the system to fail, requiring costly repairs. Refer to Warranty Information Book, located on the DVD, for further warranty information.**
- **The air conditioning system contains refrigerant under high pressure. To avoid risk of personal injury or damage to the system, adding refrigerant or any repair requiring lines to be disconnected should be done by an experienced technician.**

Refrigerant Recovery And Recycling

R-134a Air Conditioning Refrigerant is a hydrofluorocarbon (HFC) that is endorsed by the Environmental Protection Agency and is an ozone-saving product. However, the manufacturer recommends that air conditioning service be performed by authorized dealers or other service facilities using recovery and recycling equipment.

NOTE: Use only manufacturer approved A/C System Sealers, Stop Leak Products, Seal Conditioners, Compressor Oil, and Refrigerants.

A/C Air Filter

The filter is located in the fresh air inlet under the hood, behind a removable panel in the cowl on the passenger side of the vehicle, next to the windshield wipers. When installing a new filter, ensure its proper orientation.

1. Remove the access door in the cowl screen by pressing the retaining clips.

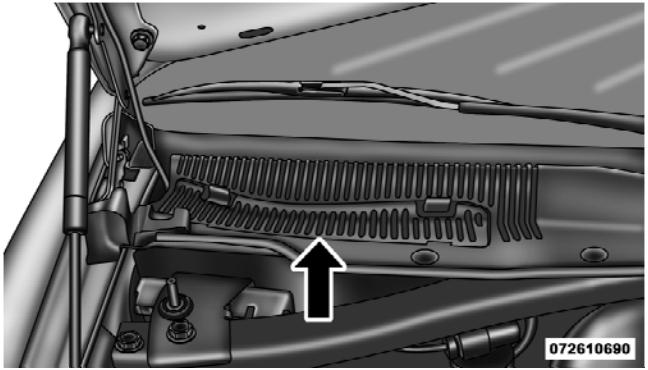

Access Door

2. Unsnap both ends and lift the filter access cover.

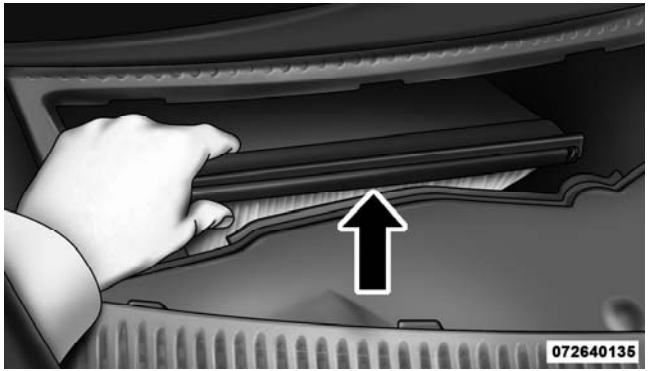

Filter Access Cover

3. Remove the used filter.

4. Install the new filter with arrows pointing in the direction of airflow, which is toward the rear of the vehicle (text and arrows on the filter will indicate this).

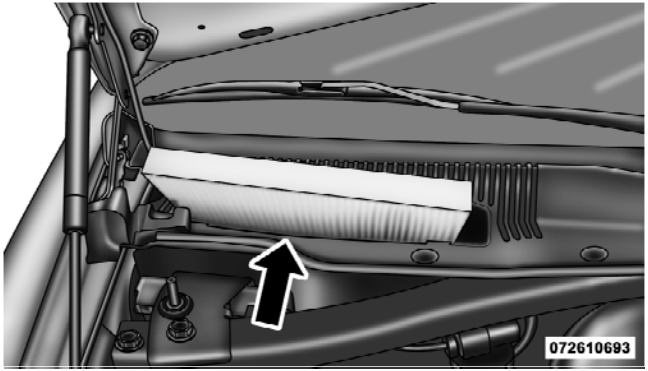

A/C Air Filter

5. Close the filter access cover.

Refer to the "Maintenance Schedule" for the proper maintenance intervals.

Body Lubrication

Locks and all body pivot points, including such items as seat tracks, door hinge pivot points and rollers, liftgate, tailgate, sliding doors and hood hinges, should be lubricated periodically with a lithium based grease, such as MOPAR® Spray White Lube or equivalent to assure quiet, easy operation and to protect against rust and wear. Prior to the application of any lubricant, the parts concerned should be wiped clean to remove dust and grit; after lubricating excess oil and grease should be removed. Particular attention should also be given to hood latching components to ensure proper function. When performing other underhood services, the hood latch, release mechanism and safety catch should be cleaned and lubricated.

The external lock cylinders should be lubricated twice a year, preferably in the Fall and Spring. Apply a small amount of a high quality lubricant, such as MOPAR® Lock Cylinder Lubricant or equivalent directly into the lock cylinder.

Windshield Wiper Blades

Clean the rubber edges of the wiper blades and the windshield periodically with a sponge or soft cloth and a mild nonabrasive cleaner. This will remove accumulations of salt or road film.

Operation of the wipers on dry glass for long periods may cause deterioration of the wiper blades. Always use washer fluid when using the wipers to remove salt or dirt from a dry windshield.

Avoid using the wiper blades to remove frost or ice from the windshield. Keep the blade rubber out of contact with petroleum products such as engine oil, gasoline, etc.

NOTE: Life expectancy of wiper blades varies depending on geographical area and frequency of use. Poor performance of blades may be present with chattering, marks, water lines or wet spots. If any of these conditions are present, clean the wiper blades or replace as necessary.

Adding Washer Fluid

The windshield washer fluid reservoir is located in the front of the engine compartment. Be sure to check the fluid level at regular intervals. Fill the reservoir with windshield washer solvent (not radiator antifreeze) and operate the system for a few seconds to flush out the residual water.

When refilling the washer fluid reservoir, apply some washer fluid to a cloth or towel and wipe the wiper blades clean. This will help blade performance.

To prevent freeze-up of your windshield washer system in cold weather, select a solution or mixture that meets or exceeds the temperature range of your climate. This rating information can be found on most washer fluid containers.

The fluid reservoir will hold nearly 1 gal (4 L) of washer fluid when the message "Low Washer Fluid" appears in the Electronic Vehicle Information Center (EVIC) (if equipped).

WARNING!

Commercially available windshield washer solvents are flammable. They could ignite and burn you. Care must be exercised when filling or working around the washer solution.

Exhaust System

The best protection against carbon monoxide entry into the vehicle body is a properly maintained engine exhaust system.

If you notice a change in the sound of the exhaust system; or if the exhaust fumes can be detected inside the vehicle; or when the underside or rear of the vehicle is damaged; have an authorized technician inspect the complete exhaust system and adjacent body areas for broken, damaged, deteriorated, or mispositioned parts. Open seams or loose connections could permit exhaust fumes to seep

into the passenger compartment. In addition, inspect the exhaust system each time the vehicle is raised for lubrication or oil change. Replace as required.

WARNING!

- **Exhaust gases can injure or kill. They contain carbon monoxide (CO), which is colorless and odorless. Breathing it can make you unconscious and can eventually poison you. To avoid breathing CO, refer to "Safety Tips/Exhaust Gas" in "Things To Know Before Starting Your Vehicle" for further information.**
- **A hot exhaust system can start a fire if you park over materials that can burn. Such materials might be grass or leaves coming into contact with your exhaust system. Do not park or operate your vehicle in areas where your exhaust system can contact anything that can burn.**

CAUTION!

- **The catalytic converter requires the use of unleaded fuel only. Leaded gasoline will destroy the effectiveness of the catalyst as an emissions control device and may seriously reduce engine performance and cause serious damage to the engine.**
- **Damage to the catalytic converter can result if your vehicle is not kept in proper operating condition. In the event of engine malfunction, particularly involving engine misfire or other apparent loss of performance, have your vehicle serviced promptly. Continued operation of your vehicle with a severe malfunction could cause the converter to overheat, resulting in possible damage to the converter and vehicle.**

Under normal operating conditions, the catalytic converter will not require maintenance. However, it is important to keep the engine properly tuned to assure proper catalyst operation and prevent possible catalyst damage.

NOTE: Intentional tampering with emissions control systems can result in civil penalties being assessed against you.

In unusual situations involving grossly malfunctioning engine operation, a scorching odor may suggest severe and abnormal catalyst overheating. If this occurs, stop the vehicle, turn off the engine and allow it to cool. Service, including a tune-up to manufacturer's specifications, should be obtained immediately.

To minimize the possibility of catalytic converter damage:

- Do not shut off the engine or interrupt the ignition, when the transmission is in gear and the vehicle is in motion.
- Do not try to start the engine by pushing or towing the vehicle.
- Do not idle the engine with any spark plug wires disconnected or removed, such as when diagnostic testing, or for prolonged periods during very rough idle or malfunctioning operating conditions.

Cooling System

WARNING!

- **When working near the radiator cooling fan, disconnect the fan motor lead or turn the ignition switch to the LOCK position. The fan is temperature controlled and can start at any time the ignition switch is in the ON position.**
- **You or others can be badly burned by hot engine coolant (antifreeze) or steam from your radiator. If you see or hear steam coming from under the hood, do not open the hood until the radiator has had time to cool. Never try to open a cooling system pressure cap when the radiator is hot.**

Coolant Checks

Check engine coolant (antifreeze) protection every 12 months (before the onset of freezing weather, where applicable). If the engine coolant (antifreeze) is dirty or rusty in appearance, the system should be drained, flushed, and refilled with fresh coolant. Check the front of the radiator for any accumulation of bugs, leaves, etc. If dirty, clean by gently spraying water from a garden hose vertically down the face of the condenser.

Check the coolant recovery bottle tubing for brittle rubber, cracking, tears, cuts, and tightness of the connection at the bottle and radiator. Inspect the entire system for leaks.

With the engine at normal operating temperature (but not running), check the cooling system pressure cap for proper vacuum sealing by draining a small amount of engine coolant (antifreeze) from the radiator drain cock. If the cap is sealing properly, the engine coolant (antifreeze) will begin to drain from the coolant recovery bottle. DO NOT REMOVE THE COOLANT PRESSURE CAP WHEN THE COOLING SYSTEM IS HOT.

Cooling System – Drain, Flush, And Refill

If the engine coolant (antifreeze) is dirty or contains a considerable amount of sediment, clean and flush with a reliable cooling system cleaner. Follow with a thorough rinsing to remove all deposits and chemicals. Properly dispose of the old engine coolant (antifreeze) solution.

Refer to the "Maintenance Schedule" for the proper maintenance intervals.

Selection Of Coolant

Use only the manufacturer's recommended engine coolant (antifreeze). Refer to "Fluids, Lubricants, and Genuine Parts" in "Maintaining Your Vehicle" for further information.

CAUTION!

- **Mixing of engine coolant (antifreeze) other than specified HOAT engine coolant (antifreeze), may result in engine damage and may decrease corrosion protection. If a non-HOAT engine coolant (antifreeze) is introduced into the cooling system in an emergency, it should be replaced with the specified engine coolant (antifreeze) as soon as possible.**
- **Do not use water alone or alcohol-based engine coolant (antifreeze) products. Do not use additional rust inhibitors or antirust products, as they may not be compatible with the radiator engine coolant (antifreeze) and may plug the radiator.**
- **This vehicle has not been designed for use with propylene glycol-based engine coolant (antifreeze). Use of propylene glycol-based engine coolant (antifreeze) is not recommended.**

Adding Coolant

Your vehicle has been built with an improved engine coolant (antifreeze) that allows extended maintenance intervals. This engine coolant (antifreeze) can be used up to five years or 104,000 miles (169 000 km) before replacement. To prevent reducing this extended maintenance period, it is important that you use the same engine coolant (antifreeze) throughout the life of your vehicle.

Please review these recommendations for using Hybrid Organic Additive Technology (HOAT) engine coolant (antifreeze). When adding engine coolant (antifreeze):

- The manufacturer recommends using MOPAR® Antifreeze/Coolant 5 Year/100,000 Mile Formula HOAT (Hybrid Organic Additive Technology) or equivalent.
- Mix a minimum solution of 50% HOAT engine coolant and distilled water. Use higher concentrations (not to exceed 70%) if temperatures below −34°F (−37°C) are anticipated.
- Use only high purity water such as distilled or deionized water when mixing the water/engine coolant (antifreeze) solution. The use of lower quality water will reduce the amount of corrosion protection in the engine cooling system.

Please note that it is the owner's responsibility to maintain the proper level of protection against freezing according to the temperatures occurring in the area where the vehicle is operated.

NOTE: Mixing engine coolant (antifreeze) types will decrease the life of the engine coolant (antifreeze) and will require more frequent coolant changes.

Cooling System Pressure Cap

The cap must be fully tightened to prevent loss of coolant, and to ensure that engine coolant (antifreeze) will return to the radiator from the coolant recovery bottle.

The cap should be inspected and cleaned if there is any accumulation of foreign material on the sealing surfaces.

WARNING!

- **The warning words "DO NOT OPEN HOT" on the cooling system pressure cap are a safety precaution. Never add engine coolant (antifreeze) when the engine is overheated. Do not loosen or remove the cap to cool an overheated engine. Heat causes pressure to build up in the cooling system. To prevent scalding or injury, do not remove the pressure cap while the system is hot or under pressure.**

(Continued)

WARNING! (Continued)

- **Do not use a pressure cap other than the one specified for your vehicle. Personal injury or engine damage may result.**

Disposal Of Used Coolant

Used ethylene glycol-based engine coolant (antifreeze) is a regulated substance requiring proper disposal. Check with your local authorities to determine the disposal rules for your community. To prevent ingestion by animals or children, do not store ethylene glycol-based engine coolant (antifreeze) in open containers or allow it to remain in puddles on the ground. If ingested by a child or pet, seek emergency assistance immediately. Clean up any ground spills immediately.

Coolant Level

The coolant bottle provides a quick visual method for determining that the coolant level is adequate. With the engine OFF and cold, the level of the engine coolant (antifreeze) in the bottle should be between the ranges indicated on the bottle.

The radiator normally remains completely full, so there is no need to remove the radiator cap unless checking for engine coolant (antifreeze) freeze point or replacing coolant. Advise your service attendant of this. As long as the engine operating temperature is satisfactory, the coolant bottle need only be checked once a month.

When additional engine coolant (antifreeze) is needed to maintain the proper level, it should be added to the coolant bottle. Do not overfill.

Points To Remember

NOTE: When the vehicle is stopped after a few miles (kilometers) of operation, you may observe vapor coming from the front of the engine compartment. This is normally a result of moisture from rain, snow, or high humidity accumulating on the radiator and being vaporized when the thermostat opens, allowing hot engine coolant (antifreeze) to enter the radiator.

If an examination of your engine compartment shows no evidence of radiator or hose leaks, the vehicle may be safely driven. The vapor will soon dissipate.

- Do not overfill the coolant recovery bottle.
- Check engine coolant (antifreeze) freeze point in the radiator and in the coolant recovery bottle. If engine coolant (antifreeze) needs to be added, contents of coolant recovery bottle must also be protected against freezing.

- If frequent engine coolant (antifreeze) additions are required, or if the level in the coolant recovery bottle does not drop when the engine cools, the cooling system should be pressure tested for leaks.
- Maintain coolant concentration at 50% HOAT engine coolant (antifreeze) (minimum) and distilled water for proper corrosion protection of your engine, which contains aluminum components.
- Make sure that the radiator and coolant recovery bottle overflow hoses are not kinked or obstructed.
- Keep the front of the radiator clean. If your vehicle is equipped with air conditioning, keep the front of the condenser clean.
- Do not change the thermostat for Summer or Winter operation. If replacement is ever necessary, install ONLY the correct type thermostat. Other designs may result in unsatisfactory coolant performance, poor gas mileage, and increased emissions.

Brake System

In order to assure brake system performance, all brake system components should be inspected periodically. Refer to the "Maintenance Schedule" for the proper maintenance intervals.

WARNING!

Riding the brakes can lead to brake failure and possibly a collision. Driving with your foot resting or riding on the brake pedal can result in abnormally high brake temperatures, excessive lining wear, and possible brake damage. You would not have your full braking capacity in an emergency.

Master Cylinder – Brake Fluid Level Check

Check the fluid level in the master cylinder immediately if the brake system warning light indicates system failure.

Check the fluid level in the master cylinder when performing underhood services.

Clean the top of the master cylinder area before removing the cap. Add fluid to bring the level up to the top of the "FULL" mark on the side of the master cylinder reservoir.

Overfilling of fluid is not recommended because it may cause leaking in the system.

Add enough fluid to bring the level up to the requirements described on the brake fluid reservoir. With disc brakes, fluid level can be expected to fall as the brake pads wear. However, low fluid level may be caused by a leak and a checkup may be needed.

Use only manufacturer's recommended brake fluid. Refer to "Fluids, Lubricants, and Genuine Parts" in "Maintaining Your Vehicle" for further information.

WARNING!

- **Use only manufacturer's recommended brake fluid. Refer to "Fluids, Lubricants, and Genuine Parts" in "Maintaining Your Vehicle" for further information. Using the wrong type of brake fluid can severely damage your brake system and/or impair its performance. The proper type of brake fluid for your vehicle is also identified on the original factory installed hydraulic master cylinder reservoir.**

(Continued)

WARNING! (Continued)

- **To avoid contamination from foreign matter or moisture, use only new brake fluid or fluid that has been in a tightly closed container. Keep the master cylinder reservoir cap secured at all times. Brake fluid in a open container absorbs moisture from the air resulting in a lower boiling point. This may cause it to boil unexpectedly during hard or prolonged braking, resulting in sudden brake failure. This could result in a collision.**
- **Overfilling the brake fluid reservoir can result in spilling brake fluid on hot engine parts, causing the brake fluid to catch fire. Brake fluid can also damage painted and vinyl surfaces, care should be taken to avoid its contact with these surfaces.**

(Continued)

WARNING! (Continued)

- **Do not allow petroleum based fluid to contaminate the brake fluid. Brake seal components could be damaged, causing partial or complete brake failure. This could result in a collision.**

Use only brake fluid that has been in a tightly closed container to avoid contamination from foreign matter or moisture.

Automatic Transmission

Selection Of Lubricant

It is important that the proper lubricant is used in the transmission to assure optimum transmission performance. Use only manufacturer's recommended transmission fluid. Refer to "Fluids, Lubricants, and Genuine Parts" in "Maintaining Your Vehicle" for further information. It is important that the transmission fluid be maintained at the prescribed level using the recommended

fluid. No chemical flushes should be used in any transmission; only the approved lubricant may be used.

Special Additives

Automatic Transmission Fluid (ATF) is an engineered product and its performance may be impaired by supplemental additives. Therefore, do not add any fluid additives to the transmission. The only exception to this policy is the use of special dyes to aid in detecting fluid leaks. In addition, avoid using transmission sealers as they may adversely affect seals.

CAUTION!

Do not use chemical flushes in your transmission as the chemicals can damage your transmission components. Such damage is not covered by the New Vehicle Limited Warranty.

Fluid Level Check

Regular automatic transmission fluid level checks are not required. For this reason, the dipstick is omitted.

If you notice fluid loss or transmission malfunction, have your authorized dealer check the transmission fluid level.

CAUTION!

- **Using a transmission fluid other than the manufacturer's recommended fluid may cause deterioration in transmission shift quality and/or torque converter shudder. Using a transmission fluid other than that recommended by the manufacturer will require more frequent fluid and filter changes. Refer to "Fluids, Lubricants, and Genuine Parts" in "Maintaining Your Vehicle" for further information.**

(Continued)

CAUTION! (Continued)

- **The fluid level is preset at the factory and it does not require adjustment under normal operating conditions. If a transmission fluid leak occurs, visit your authorized dealer immediately. Severe damage to the transmission may occur. Your authorized dealer has the proper tools to adjust the fluid level accurately.**

Fluid And Filter Changes

Refer to the "Maintenance Schedule" for the proper maintenance intervals.

If the transmission is disassembled for any reason, the fluid and filter should be changed.

All Wheel Drive (AWD) – If Equipped

The all wheel drive system consists of a transfer case and front differential. The exterior surface of these components should be inspected for evidence of fluid leaks. Confirmed leaks should be repaired as soon as possible.

The transfer case fluid fill/inspection plug is located in the middle of the rear housing. To inspect the transfer case fluid level, remove the fill/inspection plug. The fluid level should be even with the bottom of the hole. Use this plug to add fluid as required.

The front differential fill plug is located on the outer cover near the halfshaft attachment. To inspect the differential fluid level, remove the fill plug. The fluid level should be even with or slightly below the bottom of the hole.

Fluid Changes

Refer to the "Maintenance Schedule" for the proper maintenance intervals.

Rear Axle

For normal service, periodic fluid level checks are not required. When the vehicle is serviced for other reasons the exterior surfaces of the axle assembly should be inspected. If gear oil leakage is suspected inspect the fluid level. Refer to "Fluids, Lubricants, and Genuine Parts" in "Maintaining Your Vehicle" for further information.

Fluid Level Check

Check the fluid level by removing the fill plug on the axle. The fluid level should be at the bottom of the fill hole. Add fluid, if necessary, to maintain the proper level. Refer to "Fluids, Lubricants, and Genuine Parts" in "Maintaining Your Vehicle" for further information.

Change Axle Fluid

Refer to the "Maintenance Schedule" for the proper maintenance intervals.

Appearance Care And Protection From Corrosion

Protection Of Body And Paint From Corrosion

Vehicle body care requirements vary according to geographic locations and usage. Chemicals that make roads passable in snow and ice, and chemicals that are sprayed on trees and road surfaces during other seasons, are highly corrosive to the metal in your vehicle. Outside parking, which exposes your vehicle to airborne contaminants, road surfaces on which the vehicle is operated, extreme hot or cold weather and other extreme conditions will have an adverse effect on paint, metal trim, and underbody protection.

The following maintenance recommendations will enable you to obtain maximum benefit from the corrosion resistance built into your vehicle.

What Causes Corrosion?

Corrosion is the result of deterioration or removal of paint and protective coatings from your vehicle.

The most common causes are:

- Road salt, dirt, and moisture accumulation.
- Stone and gravel impact.
- Insects, tree sap, and tar.
- Salt in the air near seacoast localities.
- Atmospheric fallout/industrial pollutants.

Washing

- Wash your vehicle regularly. Always wash your vehicle in the shade using MOPAR® Car Wash or a mild car wash soap, and rinse the panels completely with clear water.
- If insects, tar, or other similar deposits have accumulated on your vehicle, use MOPAR® Super Kleen Bug and Tar Remover or equivalent to remove.
- Use a high quality cleaner wax, such as MOPAR® Cleaner Wax or equivalent to remove road film, stains and to protect your paint finish. Take care never to scratch the paint.
- Avoid using abrasive compounds and power buffing that may diminish the gloss or thin out the paint finish.

CAUTION!

- **Do not use abrasive or strong cleaning materials such as steel wool or scouring powder that will scratch metal and painted surfaces.**
- **Use of power washers exceeding 1,200 psi (8 274 kPa) can result in damage or removal of paint and decals.**

Special Care

- If you drive on salted or dusty roads or if you drive near the ocean, hose off the undercarriage at least once a month.
- It is important that the drain holes in the lower edges of the doors, rocker panels, and trunk be kept clear and open.
- If you detect any stone chips or scratches in the paint, touch them up immediately. The cost of such repairs is considered the responsibility of the owner.
- If your vehicle is damaged due to a collision or similar cause that destroys the paint and protective coating, have your vehicle repaired as soon as possible. The cost of such repairs is considered the responsibility of the owner.
- If you carry special cargo such as chemicals, fertilizers, de-icer salt, etc., be sure that such materials are well packaged and sealed.
- If a lot of driving is done on gravel roads, consider mud or stone shields behind each wheel.
- Use MOPAR® Touch Up Paint or equivalent on scratches as soon as possible. Your authorized dealer has touch up paint to match the color of your vehicle.

Wheel And Wheel Trim Care

- All wheels and wheel trim, especially aluminum and chrome plated wheels, should be cleaned regularly with a mild soap and water to prevent corrosion.
- To remove heavy soil and/or excessive brake dust, use MOPAR® Wheel Cleaner or equivalent or select a non-abrasive, non-acidic cleaner.

CAUTION!

Do not use scouring pads, steel wool, a bristle brush, or metal polishes. Do not use oven cleaner. These products may damage the wheel's protective finish. Avoid automatic car washes that use acidic solutions or harsh brushes that may damage the wheel's protective finish. Only MOPAR® Wheel Cleaner or equivalent is recommended.

Stain Repel Fabric Cleaning Procedure – If Equipped

Stain Repel seats may be cleaned in the following manner:

- Remove as much of the stain as possible by blotting with a clean, dry towel.
- Blot any remaining stain with a clean, damp towel.
- For tough stains, apply MOPAR® Total Clean or a mild soap solution to a clean, damp cloth and remove the stain. Use a fresh, damp towel to remove soap residue.
- For grease stains, apply MOPAR® Multi-Purpose Cleaner or equivalent high quality cleaner to a clean, damp cloth and remove the stain. Use a fresh, damp towel to remove soap residue.
- Do not use any harsh solvents or any other form of protectants on Stain Repel products.

Interior Care

Use MOPAR® Fabric Cleaner or equivalent to clean fabric upholstery and MOPAR® Carpet Cleaner or equivalent for carpeting.

Interior Trim should be cleaned starting with a damp cloth, or MOPAR® Satin Select or equivalent. Do not use harsh cleaners or Armor All®. Use MOPAR® Total Clean or equivalent to clean vinyl upholstery.

MOPAR® Total Clean or equivalent is specifically recommended for leather upholstery.

Your leather upholstery can be best preserved by regular cleaning with a damp soft cloth. Small particles of dirt can act as an abrasive and damage the leather upholstery and should be removed promptly with a damp cloth. Stubborn soils can be removed easily with a soft cloth and MOPAR® Total Clean or equivalent. Care should be taken to avoid soaking your leather upholstery with any liquid. Please do not use polishes, oils, cleaning fluids, solvents, detergents, or ammonia-based cleaners to clean your leather upholstery. Application of a leather conditioner is not required to maintain the original condition.

WARNING!

Do not use volatile solvents for cleaning purposes. Many are potentially flammable, and if used in closed areas they may cause respiratory harm.

Cleaning Headlights

Your vehicle has plastic headlights that are lighter and less susceptible to stone breakage than glass headlights.

Plastic is not as scratch resistant as glass and therefore different lens cleaning procedures must be followed.

To minimize the possibility of scratching the lenses and reducing light output, avoid wiping with a dry cloth. To remove road dirt, wash with a mild soap solution followed by rinsing.

Do not use abrasive cleaning components, solvents, steel wool or other aggressive material to clean the lenses.

Glass Surfaces

All glass surfaces should be cleaned on a regular basis with MOPAR® Glass Cleaner or any commercial household-type glass cleaner. Never use an abrasive type cleaner. Use caution when cleaning the inside rear window equipped with electric defrosters or the right rear

quarter window equipped with the radio antenna. Do not use scrapers or other sharp instrument that may scratch the elements.

When cleaning the rear view mirror, spray cleaner on the towel or rag that you are using. Do not spray cleaner directly on the mirror.

Cleaning Plastic Instrument Cluster Lenses

The lenses in front of the instruments in this vehicle are molded in clear plastic. When cleaning the lenses, care must be taken to avoid scratching the plastic.

1. Clean with a wet soft rag or micro-fiber towel. A mild soap solution may be used, but do not use high alcohol content or abrasive cleaners. If soap is used, wipe clean with a clean damp rag.

2. Dry with a soft cloth.

Seat Belt Maintenance

Do not bleach, dye, or clean the belts with chemical solvents or abrasive cleaners. This will weaken the fabric. Sun damage can also weaken the fabric.

If the belts need cleaning, use MOPAR® Total Clean, a mild soap solution, or lukewarm water. Do not remove the belts from the vehicle to wash them. Dry with a soft cloth.

Replace the belts if they appear frayed or worn or if the buckles do not work properly.

Cleaning The Center Console Cupholders

Clean with a damp cloth or towel using a mild detergent with the cupholder in the center console.

NOTE: The cupholder cannot be removed.

FUSES

Integrated Power Module

The Integrated Power Module is located in the engine compartment. This module contains fuses and relays.

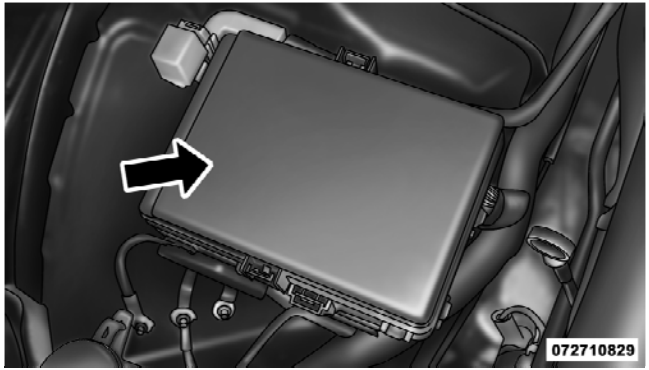

Integrated Power Module

CAUTION!

- **When installing the integrated power module cover, it is important to ensure the cover is properly positioned and fully latched. Failure to do so may allow water to get into the integrated power module and possibly result in an electrical system failure.**
- **When replacing a blown fuse, it is important to use only a fuse having the correct amperage rating. The use of a fuse with a rating other than indicated may result in a dangerous electrical system overload. If a properly rated fuse continues to blow, it indicates a problem in the circuit that must be corrected.**

Cavity	Cartridge Fuse	Mini-Fuse	Description
1	—	—	Fuse – Spare
2	40 Amp Green	—	Radiator Fan #1
3	50 Amp Red	—	Power Steering #1
4	30 Amp Pink	—	Starter
5	40 Amp Green	—	Anti-Lock Brakes
6	—	—	Fuse – Spare
7	—	—	Fuse – Spare
8	—	—	Fuse – Spare
9	—	20 Amp Yellow	All-Wheel Drive Module – If Equipped
10	—	10 Amp Red	Security
11	—	20 Amp Yellow	Horns

Cavity	Cartridge Fuse	Mini-Fuse	Description
12	—	10 Amp Red	Air Conditioning Clutch
13	—	—	Fuse – Spare
14	—	25 Amp Natural	Anti-Lock Brakes
15	—	25 Amp Natural	Transmission
16	—	—	Fuse – Spare
18	50 Amp Red	—	Radiator Fan #2
19	50 Amp Red	—	Power Steering #2
20	30 Amp Pink	—	Wiper Motor
21	30 Amp Pink	—	Headlamp Washers
22	—	—	Fuse – Spare
23	—	—	Fuse – Spare

Cavity	Cartridge Fuse	Mini-Fuse	Description
24	—	—	Fuse – Spare
28	—	25 Amp Natural	Fuel Pump
29	—	15 Amp Blue	Transmission/Shifter
30	—	—	Fuse – Spare
31	—	25 Amp Natural	Engine Module
32	—	—	Fuse – Spare
33	—	—	Fuse – Spare
34	—	25 Amp Natural	Powertrain #1
35	—	20 Amp Yellow	Powertrain #2
36	—	10 Amp Red	Anti-Lock Brake Module
37	—	10 Amp Red	Engine Controller/Rad Fan Relays

Cavity	Cartridge Fuse	Mini-Fuse	Description
38	—	10 Amp Red	Airbag Module
39	—	10 Amp Red	Power Steering Module/AC Clutch Relay
48	—	10 Amp Red	AWD Module/Front Axle Disconnect
49	—	—	Fuse – Spare
50	—	—	Fuse – Spare
51	—	20 Amp Yellow	Vacuum Pump
52	—	—	Fuse – Spare
53	—	—	Fuse – Spare

Rear Power Distribution Center

There is also a power distribution center located in the trunk under the spare tire access panel. This center contains fuses and relays.

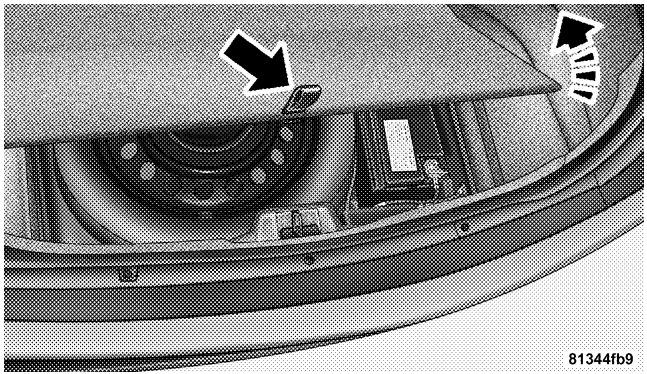

Opening The Access Panel

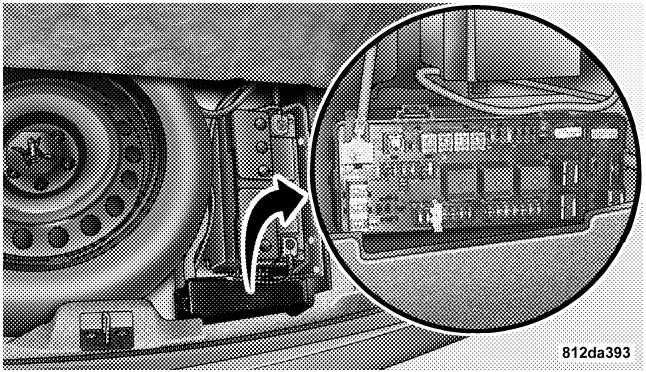

Rear Power Distribution Center

CAUTION!

- **When installing the power distribution center cover, it is important to ensure the cover is properly positioned and fully latched. Failure to do so may allow water to get into the power distribution center and possibly result in an electrical system failure.**
- **When replacing a blown fuse, it is important to use only a fuse having the correct amperage rating. The use of a fuse with a rating other than indicated may result in a dangerous electrical system overload. If a properly rated fuse continues to blow, it indicates a problem in the circuit that must be corrected.**

Cavity	Cartridge Fuse	Mini-Fuse	Description
2	60 Amp Yellow	—	Front PDC Feed #1
3	—	—	Fuse – Spare
4	60 Amp Yellow	—	Front PDC Feed #2
5	30 Amp Pink	—	Sunroof
6	40 Amp Green	—	Exterior Lighting #1
7	40 Amp Green	—	Exterior Lighting #2
8	30 Amp Pink	—	Interior Lighting/ Washer Pump
9	30 Amp Pink	—	Power Locks

Cavity	Cartridge Fuse	Mini-Fuse	Description
10	30 Amp Pink	—	Driver Door
11	30 Amp Pink	—	Passenger Door
12	—	20 Amp Yellow	Cigar Lighters, Instrument Panel & Power Outlet Console Rear
15	40 Amp Green	—	HVAC Blower
16	—	—	Fuse — Spare
17	—	—	Fuse — Spare
18	—	—	Fuse — Spare
19	—	—	Fuse — Spare
20	—	—	Fuse — Spare
21	—	—	Fuse — Spare

Cavity	Cartridge Fuse	Mini-Fuse	Description
22	—	—	Fuse — Spare
23	—	10 Amp Red	Fuel Door/Diagnostic Port
24	—	15 Amp Blue	Radio Screen
25	—	10 Amp Red	Tire Pressure Monitor
26	—	—	Fuse — Spare
27	—	25 Amp Natural	Amplifier
31	—	25 Amp Natural	Power Seats
32	—	15 Amp Blue	HVAC Module/Cluster

Cavity	Cartridge Fuse	Mini-Fuse	Description
33	—	15 Amp Blue	Ignition Switch/Wireless Module
34	—	10 Amp Red	Steering Column Module/Clock
35	—	10 Amp Red	Battery Sensor
36	—	—	Fuse — Spare
37	—	15 Amp Blue	Radio
38	—	20 Amp Yellow	Power Outlet Inside Arm Rest
40	—	—	Fuse — Spare
41	—	—	Fuse — Spare
42	30 Amp Pink	—	Rear Defrost

Cavity	Cartridge Fuse	Mini-Fuse	Description
43	—	25 Amp Natural	Rear Heated Seats/ Steering Wheel
44	—	10 Amp Red	Park Assist/Blind Spot/ Camera
45	—	15 Amp Blue	Cluster/Rearview Mirror/Compass
46	—	10 Amp Red	Adaptive Cruise Control
47	—	10 Amp Red	Adaptive Front Lighting
48	—	20 Amp Yellow	Active Suspension
49	—	—	Fuse — Spare
50	—	—	Fuse — Spare

Cavity	Cartridge Fuse	Mini-Fuse	Description
51	—	20 Amp Yellow	Front Heated Seats
52	—	10 Amp Red	Heated Cupholders/ Rear Heated Seat Switches
53	—	10 Amp Red	HVAC Module/In Car Temperature Sensor
54	—	—	Fuse — Spare
55	—	—	Fuse — Spare
56	—	—	Fuse — Spare
57	—	—	Fuse — Spare
58	—	10 Amp Red	Airbag Module
59	—	—	Fuse — Spare
60	—	—	Fuse — Spare

Cavity	Cartridge Fuse	Mini-Fuse	Description
61	—	—	Fuse — Spare
62	—	—	Fuse — Spare
63	—	—	Fuse — Spare
64	—	25 Amp Natural	Rear Windows
65	—	10 Amp Red	Airbag Module
66	—	—	Fuse — Spare
67	—	15 Amp Blue	Run Sense
68	—	15 Amp Blue	Illumination/Rear Sunshade
69	—	—	Fuse — Spare
70	—	—	Fuse — Spare

VEHICLE STORAGE

If you are leaving your vehicle dormant for more than 21 days, you may want to take these steps to protect your battery.

- Disconnect the negative cable from the battery.
- Anytime you store your vehicle, or keep it out of service (i.e., vacation) for two weeks or more, run the air conditioning system at idle for about five minutes in the fresh air and high blower setting. This will ensure adequate system lubrication to minimize the possibility of compressor damage when the system is started again.

REPLACEMENT BULBS

Interior	Bulb Number
Rear Courtesy/Reading Lamps	W5W
Rear Compartment (Trunk) Lamp	562
Overhead Console Reading Lamps	578
Visor Vanity Lamps	A6220
Glove Box Lamp – If Equipped	194
Door Courtesy	562
Shift Indicator Lamp	JKLE14140
Optional Door Map Pocket/Cupholder	LED (Serviced at Authorized Dealer)

NOTE: For lighted switches, see your authorized dealer for replacement instructions.

All of the interior bulbs are glass wedge base or glass cartridge types. Aluminum base bulbs are not approved and should not be used for replacement.

Exterior	Bulb Number
Low Beam/High Beam (Bi-Halogen Headlamp)	HIR2LL
Low Beam/High Beam (Bi-Xenon Headlamp)	D3S (Serviced at Authorized Dealer)
Front Turn Signal Lamp	PSY24WSV
Front Park Lamp	LED (Serviced at Authorized Dealer)
Daytime Running Lamp	LED (Serviced at Authorized Dealer)
Front Fog Lamp – If Equipped	H11
Front Sidemarker Lamp	LED (Serviced at Authorized Dealer)
Rear Tail/Stop/Turn Signal Lamp	LED (Serviced at Authorized Dealer)
Rear Sidemarker Lamp	LED (Serviced at Authorized Dealer)
Rear Fog Lamp – If Equipped	LED (Serviced at Authorized Dealer)
Backup Lamp	W21W
Center High Mount Stop Lamp (CHMSL)	LED (Serviced at Authorized Dealer)
License	W5W

BULB REPLACEMENT

Low Beam Headlamp, High Beam Headlamp, Park/Turn Lamp, Inner Park Lamp, And Outer Park Lamp

High Intensity Discharge Headlamps (HID) — If Equipped

The headlamps are a type of high voltage discharge tube. High voltage can remain in the circuit even with the headlamp switch off and the key removed. **Because of this, you should not attempt to service a headlamp bulb yourself. If a headlamp bulb fails, take your vehicle to an authorized dealer for service.**

WARNING!

A transient high voltage occurs at the bulb sockets of HID headlamps when the headlamp switch is turned ON. It may cause serious electrical shock or electrocution if not serviced properly. See your authorized dealer for service.

NOTE: On vehicles equipped with HID headlamps, when the headlamps are turned on, there is a blue hue to the lights. This diminishes and becomes more white after approximately 10 seconds, as the system charges.

Standard Low Beam Headlamp, High Beam Headlamp, Park/Turn Lamp, Inner Park Lamp, And Outer Park Lamp

1. Open the hood.

NOTE: Removal of the air cleaner filter housing may be necessary prior to replacing bulbs in the headlamp assembly on the driver side of the vehicle.

2. Twist the appropriate bulb and socket assembly counterclockwise, and then pull it out of the headlamp assembly.

3. Disconnect the bulb from the socket assembly and install the replacement bulb.

4. Reinstall the bulb and socket assembly into the headlamp assembly, and then turn it clockwise.

CAUTION!

Do not touch the new bulb with your fingers. Oil contamination will severely shorten bulb life. If the bulb comes in contact with an oily surface, clean the bulb with rubbing alcohol.

Rear Backup Lamp And Turn Signal Lamps

1. Open the trunk.

2. Remove the trunk trim by removing the grocery hook (using a T-20 torque driver or similar tool), remove the fastener, and pull back the weather strip.

3. Pull back the trunk liner to gain access to the tail lamp wing nuts.

4. Remove the three wing nuts from the back of the tail lamp assembly.

5. Pull the tail lamp assembly away from the vehicle enough to access the electrical connector.

6. Push the electrical connector locking tab to the side.

7. Disconnect the electrical connector.

8. Continue removing lamp from vehicle in order to access the bulb(s).

9. Turn the appropriate bulb and socket assembly counterclockwise to remove it from the tail lamp assembly.

10. Disconnect the bulb from the socket assembly and install the replacement bulb.

11. Reinstall the bulb and socket assembly into the tail lamp assembly, and then turn it clockwise.

12. Reinstall the tail lamp assembly, fasteners, electrical connector, and trunk trim.

13. Close the trunk.

License Lamp

1. Remove the screws securing the lamp to the rear fascia.

2. Remove the bulb and socket assembly.

3. Disconnect the bulb from the socket assembly and install the replacement bulb.

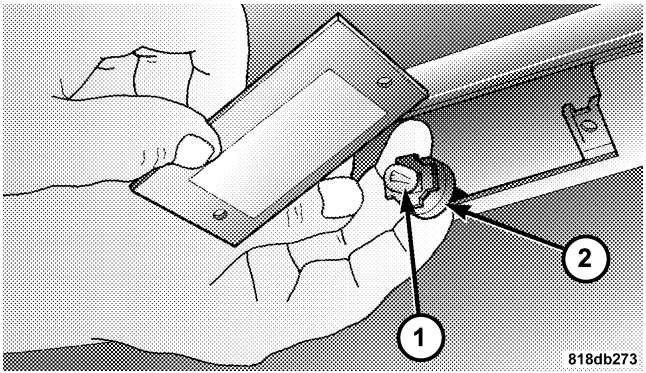

1 — License Lamp Bulb
2 — Socket

4. Reinstall the bulb and socket assembly.

5. Reattach the lamp to the rear fascia, and then install the screws.

FLUID CAPACITIES

	U.S.	Metric
Fuel (Approximate)		
All Engines	19 Gallons	72 Liters
Engine Oil with Filter		
3.6 Liter Engine (SAE 5W-30, API Certified)	6 Quarts	5.6 Liters
5.7 Liter Engine (SAE 5W-20, API Certified)	7 Quarts	6.6 Liters
Cooling System *		
3.6 Liter Engine without All Wheel Drive (MOPAR® Antifreeze/ Coolant 5 Year/100,000 Mile Formula or equivalent)	11.1 Quarts	10.5 Liters
3.6 Liter Engine with All Wheel Drive (MOPAR® Antifreeze/Coolant 5 Year/100,000 Mile Formula or equivalent)	11.4 Quarts	10.8 Liters
5.7 Liter Engine without Severe Duty II Cooling System (MOPAR® Antifreeze/Coolant 5 Year/100,000 Mile Formula or equivalent)	14.7 Quarts	13.9 Liters
5.7 Liter Engine with Severe Duty II Cooling System (MOPAR® Antifreeze/Coolant 5 Year/100,000 Mile Formula or equivalent)	15.1 Quarts	14.3 Liters
* Includes heater and coolant recovery bottle filled to MAX level.		

FLUIDS, LUBRICANTS, AND GENUINE PARTS

Engine

Component	Fluid, Lubricant, or Genuine Part
Engine Coolant	MOPAR® Antifreeze/Coolant 5 Year/100,000 Mile Formula HOAT (Hybrid Organic Additive Technology) or equivalent.
Engine Oil – 3.6L Engine	Use API Certified SAE 5W-30 Engine Oil, meeting the requirements of Chrysler Material Standard MS-6395. Refer to the engine oil fill cap for correct SAE grade.
Engine Oil – 5.7L Engine	Use API Certified SAE 5W-20 Engine Oil, meeting the requirements of Chrysler Material Standard MS-6395. Refer to the engine oil fill cap for correct SAE grade.
Engine Oil Filter	MOPAR® Engine Oil Filter or equivalent.
Spark Plugs – 3.6L Engine	RER8ZWYCB4 (Gap 0.043 in [1.1 mm])
Spark Plugs – 5.7L Engine	LZFR5C–11 (Gap 0.043 in [1.1 mm])
Fuel Selection – 3.6L Engine	87 Octane
Fuel Selection – 5.7L Engine	87 Octane Acceptable – 89 Octane Recommended

Chassis

Component	Fluid, Lubricant, or Genuine Part
Automatic Transmission – 3.6L Engine	Shell L12108 Transmission Fluid or equivalent.
Automatic Transmission – 5.7L Engine	MOPAR® ATF+4® Automatic Transmission Fluid or equivalent licensed ATF+4® product.
Brake Master Cylinder	MOPAR® DOT 3 and SAE J1703 should be used or equivalent. If DOT 3 brake fluid is not available, then DOT 4 is acceptable. Use only recommended brake fluids.
Power Steering Reservoir	MOPAR® Hydraulic Fluid or equivalent meeting MS-11655, such as Fuchs EG ZH 3044 or Pentosin CHF 11s.
Front Axle	API GL-5 SAE 75W90 Synthetic Gear Lubricant or equivalent.
Rear Axle	API GL-5 SAE 75W140 Synthetic Gear Lubricant or equivalent.
Transfer Case	MOPAR® Transfer Case Lubricant for BorgWarner 44–40 or equivalent.

MAINTENANCE SCHEDULES

CONTENTS

■ Maintenance Schedule 526
□ Required Maintenance Intervals 528

MAINTENANCE SCHEDULE

The Scheduled Maintenance services listed in this manual must be done at the times or mileages specified to protect your vehicle warranty and ensure the best vehicle performance and reliability. More frequent maintenance may be needed for vehicles in severe operating conditions, such as dusty areas and very short trip driving. Inspection and service should also be done anytime a malfunction is suspected.

Your vehicle is equipped with an automatic oil change indicator system. The oil change indicator system will remind you that it is time to take your vehicle in for scheduled maintenance.

On Electronic Vehicle Information Center (EVIC) equipped vehicles, “Oil Change Required” will be displayed in the EVIC and a single chime will sound, indicating that an oil change is necessary.

On Non-EVIC equipped vehicles, “Change Oil” will flash in the instrument cluster odometer and a single chime will sound, indicating that an oil change is necessary.

Based on engine operation conditions, the oil change indicator message will illuminate. This means that service is required for your vehicle. Operating conditions such as frequent short-trips, trailer tow, extremely hot or cold ambient temperatures, and E85 fuel usage will influence when the “Change Oil” message is displayed. Depending on operating conditions, the message may appear as early as 3,500 miles (5 630 km) since last reset. Have your vehicle serviced as soon as possible, within the next 500 miles (805 km).

NOTE:

- The oil change indicator message will not monitor the time since the last oil change. Change your vehicle's oil if it has been six months since your last oil change, even if the oil change indicator message is NOT illuminated.
- Change your engine oil more often if you drive your vehicle off-road for an extended period of time.
- Under no circumstances should oil change intervals exceed 8,000 miles (13 000 km) or six months, whichever comes first.

Your authorized dealer will reset the oil change indicator message after completing the scheduled oil change. If a scheduled oil change is performed by someone other than your authorized dealer, the message can be reset by referring to the steps described under "Electronic Vehicle Information Center (EVIC)/Oil Change Required" in "Understanding Your Instrument Panel" or under "Instrument Cluster Description/Odometer/Trip Odometer" in "Understanding Your Instrument Panel" for further information.

At Each Stop For Fuel

- Check the engine oil level. Refer to "Maintenance Procedures/Engine Oil" in "Maintaining Your Vehicle" for further information.
- Check the windshield washer solvent and add if required.

Once A Month

- Check tire pressure and look for unusual wear or damage.
- Inspect the battery, and clean and tighten the terminals as required.
- Check the fluid levels of the coolant reservoir, brake master cylinder, and power steering, and add as needed.
- Check all lights and other electrical items for correct operation.

At Each Oil Change

- Change the engine oil filter.
- Inspect the brake hoses and lines.

CAUTION!

Failure to perform the required maintenance items may result in damage to the vehicle.

Required Maintenance Intervals

Refer to the Maintenance Schedules on the following pages for the required maintenance intervals.

8,000 Miles (13,000 km) or 6 Months Maintenance Service Schedule

- ❑ Change the engine oil and engine oil filter.
- ❑ Rotate the tires, rotate at the first sign of irregular wear, even if it occurs before 8,000 miles (13 000 km).

Odometer Reading Date

Repair Order # Dealer Code

Signature, Authorized Service Center

16,000 Miles (26,000 km) or 12 Months Maintenance Service Schedule

- ❑ Change the engine oil and engine oil filter.
- ❑ Rotate the tires, rotate at the first sign of irregular wear, even if it occurs before 16,000 miles (26 000 km).
- ❑ If using your vehicle for any of the following: Dusty or off-road conditions. Inspect the engine air cleaner filter; replace if necessary.
- ❑ Replace the air conditioning filter.
- ❑ Inspect the brake linings, replace if necessary.
- ❑ Inspect exhaust system. Perform the first inspection at 16,000 miles (26 000 km) or 12 months.
- ❑ Inspect the front suspension, tie rod ends and boot seals for cracks or leaks and all parts for damage, wear, improper looseness or end play; replace if necessary.

Odometer Reading Date

Repair Order # Dealer Code

Signature, Authorized Service Center

24,000 Miles (39,000 km) or 18 Months Maintenance Service Schedule

- ❏ Change the engine oil and engine oil filter.
- ❏ Rotate the tires, rotate at the first sign of irregular wear, even if it occurs before 24,000 miles (39 000 km).
- ❏ Inspect the CV joints.
- ❏ Inspect exhaust system.
- ❏ Inspect the rear axle fluid. Inspect the front axle fluid – All Wheel Drive (AWD).

Odometer Reading Date

Repair Order # Dealer Code

Signature, Authorized Service Center

32,000 Miles (52,000 km) or 24 Months Maintenance Service Schedule

- ❏ Change the engine oil and engine oil filter.
- ❏ Rotate the tires, rotate at the first sign of irregular wear, even if it occurs before 32,000 miles (52 000 km).
- ❏ Replace the engine air cleaner filter.
- ❏ Replace the air conditioning filter.
- ❏ Replace the spark plugs (5.7L Engine).
- ❏ Adjust parking brake on vehicles equipped with four-wheel disc brakes.
- ❏ Inspect the brake linings, replace if necessary.
- ❏ Inspect the front suspension, tie rod ends and boot seals for cracks or leaks and all parts for damage, wear, improper looseness or end play; replace if necessary.
- ❏ Inspect the transfer case fluid — All Wheel Drive (AWD).

Odometer Reading Date

Repair Order # Dealer Code

Signature, Authorized Service Center

40,000 Miles (65,000 km) or 30 Months Maintenance Service Schedule

- ❏ Change the engine oil and engine oil filter.
- ❏ Rotate the tires, rotate at the first sign of irregular wear, even if it occurs before 40,000 miles (65 000 km).

Odometer Reading Date

Repair Order # Dealer Code

Signature, Authorized Service Center

48,000 Miles (78,000 km) or 36 Months Maintenance Service Schedule

- ❏ Change the engine oil and engine oil filter.
- ❏ Rotate the tires, rotate at the first sign of irregular wear, even if it occurs before 48,000 miles (78 000 km).
- ❏ If using your vehicle for any of the following: Dusty or off-road conditions. Inspect the engine air cleaner filter; replace if necessary.
- ❏ Replace the air conditioning filter.
- ❏ Inspect the brake linings, replace if necessary.
- ❏ Inspect the CV joints.
- ❏ Inspect exhaust system.
- ❏ Inspect the front suspension, tie rod ends and boot seals for cracks or leaks and all parts for damage, wear, improper looseness or end play; replace if necessary.
- ❏ Change the rear axle fluid and on models equipped with All Wheel Drive (AWD) change the front axle fluid if using your vehicle for any of the following: police, taxi, fleet, off-road, or frequent trailer towing.

Odometer Reading Date

Repair Order # Dealer Code

Signature, Authorized Service Center

56,000 Miles (91,000 km) or 42 Months Maintenance Service Schedule

- ❏ Change the engine oil and engine oil filter.
- ❏ Rotate the tires, rotate at the first sign of irregular wear, even if it occurs before 56,000 miles (91 000 km).

Odometer Reading Date

Repair Order # Dealer Code

Signature, Authorized Service Center

64,000 Miles (104,000 km) or 48 Months Maintenance Service Schedule

- ❑ Change the engine oil and engine oil filter.
- ❑ Rotate the tires, rotate at the first sign of irregular wear, even if it occurs before 64,000 miles (104 000 km).
- ❑ Replace the engine air cleaner filter.
- ❑ Replace the air conditioning filter.
- ❑ Inspect the brake linings; replace if necessary.
- ❑ Replace the spark plugs (5.7L Engine).
- ❑ Adjust parking brake on vehicles equipped with four-wheel disc brakes.
- ❑ Change the automatic transmission fluid and filter if using your vehicle for any of the following: police, taxi, fleet, or frequent trailer towing (five-speed transmission only).
- ❑ Inspect the front suspension, tie rod ends and boot seals for cracks or leaks and all parts for damage, wear, improper looseness or end play; replace if necessary.
- ❑ Change the transfer case fluid if using your vehicle for any of the following: police, taxi, fleet, or frequent trailer towing — All Wheel Drive (AWD).

Odometer Reading Date

Repair Order # Dealer Code

Signature, Authorized Service Center

72,000 Miles (117,000 km) or 54 Months Maintenance Service Schedule

- ❑ Change the engine oil and engine oil filter.
- ❑ Rotate the tires, rotate at the first sign of irregular wear, even if it occurs before 72,000 miles (117 000 km).
- ❑ Inspect the CV joints.
- ❑ Inspect exhaust system.
- ❑ Inspect the rear axle fluid. Inspect the front axle fluid – All Wheel Drive (AWD).

Odometer Reading Date

Repair Order # Dealer Code

Signature, Authorized Service Center

80,000 Miles (130,000 km) or 60 Months Maintenance Service Schedule

- ❑ Change the engine oil and engine oil filter.
- ❑ Rotate the tires, rotate at the first sign of irregular wear, even if it occurs before 80,000 miles (130 000 km).
- ❑ If using your vehicle for any of the following: Dusty or off-road conditions. Inspect the engine air cleaner filter; replace if necessary.
- ❑ Replace the air conditioning filter.
- ❑ Flush and replace the engine coolant at 60 months or 104,000 miles (169 000 km) whichever comes first.
- ❑ Inspect the brake linings, replace if necessary.
- ❑ Inspect the front suspension, tie rod ends and boot seals for cracks or leaks and all parts for damage, wear, improper looseness or end play; replace if necessary.

Odometer Reading Date

Repair Order # Dealer Code

Signature, Authorized Service Center

88,000 Miles (143,000 km) or 66 Months Maintenance Service Schedule

- ❏ Change the engine oil and engine oil filter.
- ❏ Rotate the tires, rotate at the first sign of irregular wear, even if it occurs before 88,000 miles (143 000 km).

Odometer Reading Date

Repair Order # Dealer Code

Signature, Authorized Service Center

96,000 Miles (156,000 km) or 72 Months Maintenance Service Schedule

- ❑ Change the engine oil and engine oil filter.
- ❑ Rotate the tires, rotate at the first sign of irregular wear, even if it occurs before 96,000 miles (156 000 km).
- ❑ Replace the engine air cleaner filter.
- ❑ Replace the air conditioning filter.
- ❑ Replace the spark plugs (3.6L Engine).
- ❑ Replace the spark plugs (5.7L Engine).
- ❑ Inspect and replace PCV valve if necessary.
- ❑ Adjust parking brake on vehicles equipped with four-wheel disc brakes.
- ❑ Inspect the brake linings, replace if necessary.
- ❑ Inspect the CV joints.
- ❑ Inspect exhaust system.
- ❑ Inspect the front suspension, tie rod ends and boot seals for cracks or leaks and all parts for damage, wear, improper looseness or end play; replace if necessary.
- ❑ Change the rear axle fluid and on models equipped with All Wheel Drive (AWD) change the front axle fluid if using your vehicle for any of the following: police, taxi, fleet, off-road, or frequent trailer towing.
- ❑ Inspect the transfer case fluid — All Wheel Drive (AWD).

Odometer Reading Date

Repair Order # Dealer Code

Signature, Authorized Service Center

104,000 Miles (169,000 km) or 78 Months Maintenance Service Schedule

- ❏ Change the engine oil and engine oil filter.
- ❏ Rotate the tires, rotate at the first sign of irregular wear, even if it occurs before 104,000 miles (169 000 km).
- ❏ Flush and replace the engine coolant at 104,000 miles (169 000 km) or 60 months whichever comes first.

Odometer Reading Date

Repair Order # Dealer Code

Signature, Authorized Service Center

112,000 Miles (182,000 km) or 84 Months Maintenance Service Schedule

- ❏ Change the engine oil and engine oil filter.
- ❏ Rotate the tires, rotate at the first sign of irregular wear, even if it occurs before 112,000 miles (182 000 km).
- ❏ If using your vehicle for any of the following: Dusty or off-road conditions. Inspect the engine air cleaner filter; replace if necessary.
- ❏ Replace the air conditioning filter.
- ❏ Inspect the brake linings, replace if necessary.
- ❏ Inspect the front suspension, tie rod ends and boot seals for cracks or leaks and all parts for damage, wear, improper looseness or end play; replace if necessary.

Odometer Reading Date

Repair Order # Dealer Code

Signature, Authorized Service Center

120,000 Miles (195,000 km) or 90 Months Maintenance Service Schedule

- ❏ Change the engine oil and engine oil filter.
- ❏ Rotate the tires, rotate at the first sign of irregular wear, even if it occurs before 120,000 miles (195 000 km).
- ❏ Inspect the CV joints.
- ❏ Inspect exhaust system.
- ❏ Change the automatic transmission fluid and filter (five-speed transmission only).
- ❏ Inspect the rear axle fluid. Inspect the front axle fluid – All Wheel Drive (AWD).

Odometer Reading Date

Repair Order # Dealer Code

Signature, Authorized Service Center

128,000 Miles (208,000 km) or 96 Months Maintenance Service Schedule

- ❏ Change the engine oil and engine oil filter.
- ❏ Rotate the tires, rotate at the first sign of irregular wear, even if it occurs before 128,000 miles (208 000 km).
- ❏ Replace the engine air cleaner filter.
- ❏ Replace the air conditioning filter.
- ❏ Replace the spark plugs (5.7L Engine).
- ❏ Adjust parking brake on vehicles equipped with four-wheel disc brakes.
- ❏ Inspect the brake linings, replace if necessary.
- ❏ Inspect the front suspension, tie rod ends and boot seals for cracks or leaks and all parts for damage, wear, improper looseness or end play; replace if necessary.
- ❏ Change the transfer case fluid if using your vehicle for any of the following: police, taxi, fleet, or frequent trailer towing — All Wheel Drive (AWD).

Odometer Reading Date

Repair Order # Dealer Code

Signature, Authorized Service Center

136,000 Miles (221,000 km) or 102 Months Maintenance Service Schedule

- ❏ Change the engine oil and engine oil filter.
- ❏ Rotate the tires, rotate at the first sign of irregular wear, even if it occurs before 136,000 miles (221 000 km).

Odometer Reading Date

Repair Order # Dealer Code

Signature, Authorized Service Center

144,000 Miles (234,000 km) or 108 Months Maintenance Service Schedule

- ❏ Change the engine oil and engine oil filter.
- ❏ Rotate the tires, rotate at the first sign of irregular wear, even if it occurs before 144,000 miles (234 000 km).
- ❏ If using your vehicle for any of the following: Dusty or off-road conditions. Inspect the engine air cleaner filter; replace if necessary.
- ❏ Replace the air conditioning filter.
- ❏ Inspect the brake linings, replace if necessary.
- ❏ Inspect the CV joints.
- ❏ Inspect exhaust system.
- ❏ Inspect the front suspension, tie rod ends and boot seals for cracks or leaks and all parts for damage, wear, improper looseness or end play; replace if necessary.
- ❏ Change the rear axle fluid and on models equipped with All Wheel Drive (AWD) change the front axle fluid if using your vehicle for any of the following: police, taxi, fleet, off-road, or frequent trailer towing.

Odometer Reading Date

Repair Order # Dealer Code

Signature, Authorized Service Center

152,000 Miles (247,000 km) or 114 Months Maintenance Service Schedule

- ❑ Change the engine oil and engine oil filter.
- ❑ Rotate the tires, rotate at the first sign of irregular wear, even if it occurs before 152,000 miles (247 000 km).

Odometer Reading Date

Repair Order # Dealer Code

Signature, Authorized Service Center

WARNING!

- **You can be badly injured working on or around a motor vehicle. Do only service work for which you have the knowledge and the right equipment. If you have any doubt about your ability to perform a service job, take your vehicle to a competent mechanic.**
- **Failure to properly inspect and maintain your vehicle could result in a component malfunction and effect vehicle handling and performance. This could cause an accident.**

IF YOU NEED CONSUMER ASSISTANCE

CONTENTS

- Suggestions For Obtaining Service For Your Vehicle 543
  - Prepare For The Appointment 543
  - Prepare A List 543
  - Be Reasonable With Requests 543
- If You Need Assistance 543
  - Chrysler Group LLC Customer Center 544
  - Chrysler Canada Inc. Customer Center 544
  - In Mexico Contact 544
  - Customer Assistance For The Hearing Or Speech Impaired (TDD/TTY) 545
  - Service Contract 545
- Warranty Information 546
- MOPAR® Parts 546
- Reporting Safety Defects 547
  - In The 50 United States And Washington, D.C. 547
  - In Canada 547
- Publication Order Forms 547

■ Department Of Transportation Uniform Tire Quality Grades 549
□ Treadwear 549
□ Traction Grades 549
□ Temperature Grades 550

SUGGESTIONS FOR OBTAINING SERVICE FOR YOUR VEHICLE

Prepare For The Appointment

If you're having warranty work done, be sure to have the right papers with you. Take your warranty folder. All work to be performed may not be covered by the warranty. Discuss additional charges with the service manager. Keep a maintenance log of your vehicle's service history. This can often provide a clue to the current problem.

Prepare A List

Make a written list of your vehicle's problems or the specific work you want done. If you've had an accident or work done that is not on your maintenance log, let the service advisor know.

Be Reasonable With Requests

If you list a number of items and you must have your vehicle by the end of the day, discuss the situation with the service advisor and list the items in order of priority. At many authorized dealers, you may obtain a rental vehicle at a minimal daily charge. If you need a rental, it is advisable to make these arrangements when you call for an appointment.

IF YOU NEED ASSISTANCE

The manufacturer and its authorized dealers are vitally interested in your satisfaction. We want you to be happy with our products and services.

Warranty service must be done by an authorized dealer. We strongly recommend that you take the vehicle to an authorized dealer. They know your vehicle the best, and are most concerned that you get prompt and high quality service. The manufacturer's authorized dealers have the facilities, factory-trained technicians, special tools, and the latest information to ensure the vehicle is fixed correctly and in a timely manner.

This is why you should always talk to an authorized dealer's service manager first. Most matters can be resolved with this process.

- If for some reason you are still not satisfied, talk to the general manager or owner of the authorized dealership. They want to know if you need assistance.
- If an authorized dealership is unable to resolve the concern, you may contact the manufacturer's customer center.

Any communication to the manufacturer's customer center should include the following information:

- Owner's name and address
- Owner's telephone number (home and office)
- Authorized dealership name
- Vehicle Identification Number (VIN)
- Vehicle delivery date and mileage

Chrysler Group LLC Customer Center
P.O. Box 21–8004
Auburn Hills, MI 48321–8004
Phone: (800) 247–9753

Chrysler Canada Inc. Customer Center
P.O. Box 1621
Windsor, Ontario N9A 4H6
Phone: (800) 465–2001 English / (800) 387–9983 French

In Mexico contact:
Av. Prolongacion Paseo de la Reforma, 1240
Sante Fe C.P. 05109
Mexico, D. F.
In Mexico City: 5081-7568
Outside Mexico City: 1-800-505-1300

Customer Assistance For The Hearing Or Speech Impaired (TDD/TTY)

To assist customers who have hearing difficulties, the manufacturer has installed special TDD (Telecommunication Devices for the Deaf) equipment at its customer center. Any hearing or speech impaired customer, who has access to a TDD or a conventional teletypewriter (TTY) in the United States, can communicate with the manufacturer by dialing 1–800–380–CHRY.

Canadian residents with hearing difficulties that require assistance can use the special needs relay service offered by Bell Canada. For TTY teletypewriter users, dial 711 and for Voice callers, dial 1 800 855-0511 to connect with a Bell Relay Service operator.

Service Contract

You may have purchased a service contract for a vehicle to help protect you from the high cost of unexpected repairs after the manufacturer's New Vehicle Limited Warranty expires. The manufacturer stands behind only the manufacturer's service contracts. If you purchased a manufacturer's service contract, you will receive Plan Provisions and an Owner Identification Card in the mail within three weeks of the vehicle delivery date. If you have any questions about the service contract, call the manufacturer's Service Contract National Customer Hotline at 1-800-521-9922 (Canadian residents, call (800) 465–2001 English / (800) 387–9983 French).

The manufacturer will not stand behind any service contract that is not the manufacturer's service contract. It is not responsible for any service contract other than the manufacturer's service contract. If you purchased a service contract that is not a manufacturer's service contract, and you require service after the manufacturer's New Vehicle Limited Warranty expires, please refer to the contract documents, and contact the person listed in those documents.

We appreciate that you have made a major investment when you purchased the vehicle. An authorized dealer has also made a major investment in facilities, tools, and training to assure that you are absolutely delighted with the ownership experience. You'll be pleased with their sincere efforts to resolve any warranty issues or related concerns.

WARNING!

Engine exhaust, some of its constituents, and certain vehicle components contain, or emit, chemicals known to the State of California to cause cancer and birth defects, or other reproductive harm. In addition, certain fluids contained in vehicles and certain products of component wear contain, or emit, chemicals known to the State of California to cause cancer and birth defects, or other reproductive harm.

WARRANTY INFORMATION

See the Warranty Information Booklet, located on the DVD, for the terms and provisions of Chrysler Group LLC warranties applicable to this vehicle and market.

MOPAR® PARTS

MOPAR® fluids, lubricants, parts, and accessories are available from an authorized dealer. They are recommended for your vehicle in order to help keep the vehicle operating at its best.

REPORTING SAFETY DEFECTS

In the 50 United States and Washington, D.C.

If you believe that your vehicle has a defect that could cause a crash or cause injury or death, you should immediately inform the National Highway Traffic Safety Administration (NHTSA) in addition to notifying the manufacturer.

If NHTSA receives similar complaints, it may open an investigation, and if it finds that a safety defect exists in a group of vehicles, it may order a recall and remedy campaign. However, NHTSA cannot become involved in individual problems between you, your authorized dealer, and the manufacturer.

To contact NHTSA, you may either call the Auto Safety Hotline toll free at 1–888–327–4236 (TTY: 1–800–424–9153), or go to http://www.safercar.gov; or write to: Administrator, NHTSA, 1200 New Jersey Avenue, SE., West Building, Washington, D.C. 20590. You can also obtain other information about motor vehicle safety from http://www.safercar.gov.

In Canada

If you believe that your vehicle has a safety defect, you should contact the Customer Service Department immediately. Canadian customers who wish to report a safety defect to the Canadian government should contact Transport Canada, Motor Vehicle Defect Investigations and Recalls at 1-800-333-0510 or go to http://www.tc.gc.ca/roadsafety/

PUBLICATION ORDER FORMS

To order the following manuals, you may use either the website or the phone numbers listed below. Visa, Mastercard, American Express, and Discover orders are accepted. If you prefer mailing your payment, please call for an order form.

NOTE: A street address is required when ordering manuals (no P.O. Boxes).

- *Service Manuals*

  These comprehensive Service Manuals provide the information that students and professional technicians need in diagnosing/troubleshooting, problem solving, maintaining, servicing, and repairing Chrysler Group LLC vehicles. A complete working knowledge of the vehicle, system, and/or components is written in straightforward language with illustrations, diagrams, and charts.

- *Diagnostic Procedure Manuals*

  Diagnostic Procedure Manuals are filled with diagrams, charts and detailed illustrations. These practical manuals make it easy for students and technicians to find and fix problems on computer-controlled vehicle systems and features. They show exactly how to find and correct problems the first time, using step-by-step troubleshooting and drivability procedures, proven diagnostic tests and a complete list of all tools and equipment.

- *Owner's Manuals*

  These Owner's Manuals have been prepared with the assistance of service and engineering specialists to acquaint you with specific Chrysler Group LLC vehicles. Included are starting, operating, emergency and maintenance procedures as well as specifications, capabilities and safety tips.

Call toll free at:

- **1–800–890–4038 (U.S.)**
- **1–800–387–1143 (Canada)**

Or

Visit us on the Worldwide Web at:

- **www.techauthority.com**

DEPARTMENT OF TRANSPORTATION UNIFORM TIRE QUALITY GRADES

The following tire grading categories were established by the National Highway Traffic Safety Administration. The specific grade rating assigned by the tire's manufacturer in each category is shown on the sidewall of the tires on your vehicle.

All passenger car tires must conform to Federal safety requirements in addition to these grades.

Treadwear

The Treadwear grade is a comparative rating, based on the wear rate of the tire when tested under controlled conditions on a specified government test course. For example, a tire graded 150 would wear one and one-half times as well on the government course as a tire graded 100. The relative performance of tires depends upon the actual conditions of their use, however, and may depart significantly from the norm due to variations in driving habits, service practices, and differences in road characteristics and climate.

Traction Grades

The Traction grades, from highest to lowest, are AA, A, B, and C. These grades represent the tire's ability to stop on wet pavement, as measured under controlled conditions on specified government test surfaces of asphalt and concrete. A tire marked C may have poor traction performance.

WARNING!

The traction grade assigned to this tire is based on straight-ahead braking traction tests, and does not include acceleration, cornering, hydroplaning, or peak traction characteristics.

Temperature Grades

The temperature grades are A (the highest), B, and C, representing the tire's resistance to the generation of heat and its ability to dissipate heat, when tested under controlled conditions on a specified indoor laboratory test wheel. Sustained high temperature can cause the material of the tire to degenerate and reduce tire life, and excessive temperature can lead to sudden tire failure. The grade C corresponds to a level of performance, which all passenger car tires must meet under the Federal Motor Vehicle Safety Standard No. 109. Grades B and A represent higher levels of performance on the laboratory test wheel, than the minimum required by law.

WARNING!

The temperature grade for this tire is established for a tire that is properly inflated and not overloaded. Excessive speed, under-inflation, or excessive loading, either separately or in combination, can cause heat buildup and possible tire failure.

INDEX

About Your Brakes 375
ABS (Anti-Lock Brake System) 377
Adaptive Cruise Control (ACC) (Cruise Control) . . 199
Adding Engine Coolant (Antifreeze) 494
Adding Fuel 428
Adding Washer Fluid 489
Additives, Fuel 423
Adjustable Pedals 194
Air Cleaner, Engine (Engine Air Cleaner Filter) . . . 482
Air Conditioner Maintenance 485
Air Conditioning Filter 342,486
Air Conditioning Refrigerant 485,486
Air Conditioning System 340,485
Air Pressure, Tires 398
Airbag 56,66
Airbag Deployment 67
Airbag Light 63,64,69,84,280
Airbag Maintenance 68
Airbag, Side 60,62,65,66
Airbag, Window (Side Curtain) 60,62,66
Alarm (Security Alarm) 18
Alarm Light 281
Alarm System (Security Alarm) 18
Alarm, Panic 24
All Wheel Drive (AWD) 369,501
Alterations/Modifications, Vehicle 7
Anti-Lock Brake System (ABS) 377,379
Anti-Lock Warning Light 280
Anti-Theft Security Alarm (Theft Alarm) 18
Antifreeze (Engine Coolant) 493,521
Disposal 495
Appearance Care 502
Arming Theft System (Security Alarm) 18
Assist, Hill Start 383
Auto Down Power Windows 39
Auto Unlock, Doors 32
Auto Up Power Windows 39
Automatic Dimming Mirror 94

Automatic Door Locks 32
Automatic Headlights 176
Automatic Oil Change Indicator 293
Automatic Temperature Control (ATC) 340
Automatic Transaxle
    Special Additives 500
Automatic Transmission 355,358,499,501
    Adding Fluid 501,523
    Autostick 365
    Fluid and Filter Changes 501
    Fluid Change 501
    Fluid Level Check 500
    Fluid Type 523
    Special Additives 500
Automatic Transmission Limp Home Mode 357
Autostick 365
Axle Fluid 523
Axle Lubrication (Axle Fluid) 523
B-Pillar Location 393
Battery 483
    Keyless Transmitter Replacement (RKE) 25
    Location 483
Belts, Seat 47,84
Body Mechanism Lubrication 488
Brake Assist System 380
Brake Control System, Electronic 379
Brake Fluid 523
Brake System 497
    Anti-Lock (ABS) 377
    Fluid Check 498,523
    Master Cylinder 498
    Parking 375
    Warning Light 281
Brake, Parking 375
Brake/Transmission Interlock 354
Brakes 497
Break-In Recommendations, New Vehicle 81

Brightness, Interior Lights 184
Bulb Replacement 516,517
Bulbs, Light 86,516

Camera, Rear 235
Capacities, Fluid 521
Caps, Filler
    Oil (Engine) 481
    Radiator (Coolant Pressure) 495
Car Washes 503
Carbon Monoxide Warning 83,424
Cargo (Vehicle Loading) 431
Cellular Phone 332
Certification Label 431
Chains, Tire 406
Changing A Flat Tire 449
Chart, Tire Sizing 389
Check Engine Light
(Malfunction Indicator Light) 279,475
Checking Your Vehicle For Safety 82
Checks, Safety 82
Child Restraint 71,72,73,76,79
Child Restraint Tether Anchors 75,76
Child Safety Locks 32
Clean Air Gasoline 421
Cleaning
    Wheels 504
    Windshield Wiper Blades 488
Climate Control 332
Clock 328
Coin Holder 262
Cold Weather Operation 351
Compact Disc (CD) Maintenance 331
Compact Spare Tire 401
Computer, Trip/Travel 297
Connector
    UCI 328
    Universal Consumer Interface (UCI) 328

Conserving Fuel 294
Console, Floor 262
Console, Overhead 237
Contract, Service 545
Coolant Pressure Cap (Radiator Cap) 495
Cooling System 492
    Adding Coolant (Antifreeze) 494
    Coolant Capacity 521
    Coolant Level 492,496
    Disposal of Used Coolant 495
    Drain, Flush, and Refill 493
    Inspection 496
    Points to Remember 496
    Pressure Cap 495
    Radiator Cap 495
    Selection of Coolant (Antifreeze) 493,521,522
Corrosion Protection 502
Cruise Control (Speed Control) 199
Cupholders 259,507
Customer Assistance 543

Data Recorder, Event 70
Daytime Brightness, Interior Lights 186
Daytime Running Lights 179
Dealer Service 477
Deck Lid, Emergency Release 43
Deck Lid, Power Release 41
Defroster, Rear Window 267
Defroster, Windshield 84,338
Delay (Intermittent) Wipers 187
Diagnostic System, Onboard 475
Dimmer Switch, Headlight 181
Dipsticks
    Oil (Engine) 479
Disabled Vehicle Towing 467
Disposal
    Antifreeze (Engine Coolant) 495
    Engine Oil 482

Door Locks 29
Door Locks, Automatic 32
Door Opener, Garage 238
Driving
On Slippery Surfaces 370
Through Flowing, Rising, or Shallow Standing Water 371
Driving to Achieve Maximum Fuel Economy 294

E-85 Fuel 424
Electric Rear Window Defrost 267
Electric Remote Mirrors 97
Electrical Power Outlets 254
Electronic Brake Control System 379
Anti-Lock Brake System 379
Brake Assist System 380
Traction Control System 380
Electronic Power Distribution Center (Fuses) 508
Electronic Speed Control (Cruise Control) 196,199
Electronic Stability Control (ESC) 381
Electronic Vehicle Information Center (EVIC) 235,285
Emergency Deck Lid Release 43
Emergency Trunk Release 43
Emergency, In Case of
Freeing Vehicle When Stuck 462
Hazard Warning Flasher 448
Jacking 449
Jump Starting 458
Overheating 448
Towing 467
Emission Control System Maintenance 475
Engine 474
Air Cleaner 482
Block Heater 352
Break-In Recommendations 81
Checking Oil Level 479
Compartment 473,474

Compartment Identification 473
Coolant (Antifreeze) 492,522
Cooling 492
Exhaust Gas Caution 83,424
Fails to Start 351
Flooded, Starting 351
Fuel Requirements 420
Jump Starting 458
Multi-Displacement 374
Oil 479,521,522
Oil Change Interval 293,480
Oil Filler Cap 481
Oil Filter 482
Oil Filter Disposal 482
Oil Selection 480,521
Oil Synthetic 481
Overheating 448
Starting 348
Temperature Gauge 284
Engine Oil Viscosity 481
Enhanced Accident Response Feature 66
Entry System, Illuminated 21
Ethanol 421
Event Data Recorder 70
Exhaust Gas Caution 83,424
Exhaust System 83,489
Exterior Folding Mirrors 95
Exterior Lighting 175
Exterior Lights 86

Filler Location Fuel 280
Filters
    Air Cleaner 482
    Air Conditioning 342,486
    Engine Oil 482,522
    Engine Oil Disposal 482
Flash-To-Pass 181

Flashers
Hazard Warning 448
Turn Signal 86,181,276
Flat Tire Changing 449
Flexible Fuel Vehicles
Cruising Range 427
Engine Oil 426
Fuel Requirements 424,425
Maintenance 427
Replacement Parts 427
Starting 427
Flooded Engine Starting 351
Floor Console 262
Fluid Capacities 521
Fluid Leaks 86
Fluid Level Checks
Automatic Transmission 500
Brake 498
Cooling System 492
Engine Oil 479
Transfer Case 501
Fluid, Brake 523
Fluids 522
Fluids, Lubricants and Genuine Parts 522
Fog Lights 179,276
Folding Rear Seat 168
Forward Collision Warning 222,289
Freeing A Stuck Vehicle 462
Fuel 420
Additives 423
Clean Air 421
Conserving 294
Ethanol 421
Filler Door (Gas Cap) 280
Gasoline 420
Gauge 280
Light 289
Materials Added 423

Methanol 421
Octane Rating 522
Saver Mode 294
Specifications 522
Tank Capacity 521
Fuel Optimizer 294
Fuel Saver 294
Fuel, Flexible 424
Fuses 508

Garage Door Opener (HomeLink®) 238
Gasoline (Fuel) 420
Conserving 294
Gasoline, Clean Air 421
Gasoline, Reformulated 421
Gauges
Coolant Temperature 284
Fuel 280
Speedometer 280
Tachometer 276
Gear Ranges 355,359
Gear Select Lever Override 464
General Information 18,26,141,220,419
General Maintenance 478
Glass Cleaning 506
Gross Axle Weight Rating 432,434
Gross Vehicle Weight Rating 432,433
GVWR 432

Hazard
Driving Through Flowing, Rising, or Shallow Standing Water 371
Hazard Warning Flasher 448
Head Restraints 165
Head Rests 165
Headlight Washers 489
Headlights 517
Automatic 176

Bulb Replacement 517
Cleaning 506
Delay 176
High Beam/Low Beam Select Switch 181
Lights On Reminder 179
On With Wipers 176,188
Passing 181
Switch 175
Time Delay 176
Washers 489
Heated Mirrors 98
Heated Seats 160
Heater, Engine Block 352
High Beam/Low Beam Select (Dimmer) Switch . . 181
Hill Start Assist 383
Hitches
Trailer Towing 436
Holder, Coin 262
Holder, Cup 259
HomeLink® (Garage Door Opener) Transmitter . . 238

Ignition
Key 12
Illuminated Entry 21
Immobilizer (Sentry Key) 16
Infant Restraint 71,72
Information Center, Vehicle 285
Instrument Cluster 274,276
Instrument Panel and Controls 273
Instrument Panel Lens Cleaning 507
Integrated Power Module (Fuses) 508
Interior Appearance Care 505
Interior Fuses 508
Interior Lights 184
Intermittent Wipers (Delay Wipers) 187
Introduction 4

Jack Location 450

Jack Operation 453
Jacking Instructions 453
Jump Starting 458

Key-In Reminder 15
Key, Programming 18
Key, Replacement 17
Key, Sentry (Immobilizer) 16
Keyless Enter-N-Go™ 34,349
Keyless Entry System 21
Keyless Go 12
Keys 12
Kicker Sound System 328
Knee Bolster 56,57

Lane Change and Turn Signals 181
Lane Change Assist 181
Lap/Shoulder Belts 47
LATCH
(Lower Anchors and Tether for CHildren) 75,76
Latch Plate 48
Latches 86
Lead Free Gasoline 420
Leaks, Fluid 86
Life of Tires 404
Light Bulbs 86,516
Lights 86,175
Airbag 63,64,69,84,280
Alarm 281
Anti-Lock 280
Automatic Headlights 176
Brake Assist Warning 386
Brake Warning 281
Bulb Replacement 516,517
Daytime Running 179
Dimmer Switch, Headlight 180,181
Electronic Stability Program (ESP) Indicator . . 386

Exterior 86
Fog 179,276
Hazard Warning Flasher 448
Headlight Switch 175
Headlights 175,517
Headlights On Reminder 179
Headlights On With Wipers 176,188
High Beam 181
High Beam Indicator 276
High Beam/Low Beam Select 181
Illuminated Entry 21
Instrument Cluster 175
Intensity Control 184
Interior 184
License 520
Lights On Reminder 179
Low Fuel 289
Malfunction Indicator (Check Engine) 279
Map Reading 182,183
Parade Mode (Daytime Brightness) 186
Passing 181
Reading 182,183,237
Seat Belt Reminder 284
Security Alarm (Theft Alarm) 281
Service 516,517
Service Engine Soon
(Malfunction Indicator) 279
SmartBeams 177
Theft Alarm (Security Alarm) 281
Tire Pressure Monitoring (TPMS) 277,410
Traction Control 386
Turn Signal 86,180,181
Vanity Mirror 98
Warning (Instrument Cluster Description) . . . 276
Load Leveling System 270
Loading Vehicle 431,433
Capacities 433
Tires 393

Locks 29
Auto Unlock 32
Automatic Door 32
Child Protection 32
Door 29
Power Door 31
Low Tire Pressure System 410
Lower Anchors and Tether for CHildren (LATCH) 75,76
Lubrication, Body 488

Maintenance Free Battery 483
Maintenance Procedures 478
Maintenance Schedule 526
Maintenance, General 478
Malfunction Indicator Light (Check Engine) . . 279,475
Manual Transmission 502
Fluid Level Check 502
Manual, Service 547
Master Cylinder (Brakes) 498
Memory Feature (Memory Seat) 169
Memory Seat 169
Memory Seats and Radio 169
Methanol 421
Mini-Trip Computer 297
Mirrors 94
Automatic Dimming 94
Electric Powered 97
Electric Remote 97
Exterior Folding 95
Heated 98
Outside 95
Vanity 98
Mode
Fuel Saver 294
Modifications/Alterations, Vehicle 7
Monitor, Tire Pressure System 410
Mopar Parts 477,546

MTBE/ETBE 421
Multi-Displacement Engine System 374
Multi-Function Control Lever 180

Navigation System (Uconnect™ gps) 235
New Vehicle Break-In Period 81

Occupant Restraints 43,62,67
Occupant Restraints (Sedan) 60,62,66
Octane Rating, Gasoline (Fuel) 522
Odometer 276
Oil Change Indicator 277,293
Oil Change Indicator, Reset 277,293
Oil Filter, Change 482
Oil Filter, Selection 482
Oil, Engine 479,522
  Capacity 521
  Change Interval 293,480
  Checking 479
  Dipstick 479
  Disposal 482
  Filter 482,522
  Filter Disposal 482
  Identification Logo 480
  Materials Added to 481
  Recommendation 480,521
  Synthetic 481
  Viscosity 481,521
Onboard Diagnostic System 475
Opener, Garage Door (HomeLink®) 238
Operating Precautions 475
Operator Manual (Owner's Manual) 4
Outside Rearview Mirrors 95
Overdrive 365
Overdrive OFF Switch 365
Overhead Console 237
Overheating, Engine 284,448
Owner's Manual (Operator Manual) 4,547

Paint Care 502
Panic Alarm 24
Park Sense System, Rear 225
Parking Brake 375
Passing Light 181
Pedals, Adjustable 194
Pets 81
Placard, Tire and Loading Information 393
Power
    Deck Lid Release 41
    Distribution Center (Fuses) 508,511
    Door Locks 31
    Mirrors 97
    Outlet (Auxiliary Electrical Outlet) 254
    Seats 157
    Steering 373
    Sunroof 247,251
    Tilt/Telescoping Steering Column 191
    Windows 38
Power Steering Fluid 523
Pregnant Women and Seat Belts 56
Preparation for Jacking 452
Pretensioners
    Seat Belts 54
Programming Transmitters
(Remote Keyless Entry) 21

Radial Ply Tires 400
Radiator Cap (Coolant Pressure Cap) 495
Radio Operation 332
Radio Remote Controls 330
Rain Sensitive Wiper System 189
Rear Camera 235
Rear Cupholder 261
Rear Park Sense System 225
Rear Seat, Folding 168
Rear Window Defroster 267
Rear Window Features 267

Recorder, Event Data 70
Recreational Towing 445
Reformulated Gasoline 421
Refrigerant 486
Reminder, Lights On 179
Reminder, Seat Belt 55
Remote Control
    Starting System 26
Remote Keyless Entry (RKE) 21
Remote Sound System (Radio) Controls 330
Remote Starting System 26
Remote Trunk Release 41
Replacement Bulbs 516
Replacement Keys 17
Replacement Parts 477
Replacement Tires 405
Reporting Safety Defects 547
Resetting Oil Change Indicator 277,293
Restraint, Head 165
Restraints, Child 71
Restraints, Occupant 43
Rocking Vehicle When Stuck 462
Rotation, Tires 409

Safety Checks Inside Vehicle 84
Safety Checks Outside Vehicle 86
Safety Defects, Reporting 547
Safety Information, Tire 387
Safety Tips 82
Safety, Exhaust Gas 83
Schedule, Maintenance 526
Seat Belt Maintenance 507
Seat Belt Reminder 55
Seat Belts 43,47,84
    Adjustable Upper Shoulder Anchorage 51
    And Pregnant Women 56
    Child Restraint 71,72,73,79
    Extender 56

Front Seat 47,48
Inspection 84
Operating Instructions 48
Pretensioners 54
Rear Seat 47
Untwisting Procedure 52
Seats 157
Adjustment 157
Easy Entry 172
Head Restraints 165
Heated 160
Height Adjustment 157
Memory 169
Power 157
Rear Folding 168
Seatback Release 168
Tilting 157
Security Alarm (Theft Alarm) 18
Selection of Coolant (Antifreeze) 493,522
Selection of Oil 480
Sentry Key (Immobilizer) 16
Sentry Key Programming 18
Sentry Key Replacement 17
Service Assistance 543
Service Contract 545
Service Engine Soon Light
(Malfunction Indicator) 279
Service Manuals 547
Setting the Clock 328
Shift Lever Override 464
Shifting 353
Automatic Transmission 353
Shoulder Belt Upper Anchorage 51
Shoulder Belts 47
Side Airbag 65
Side View Mirror Adjustment 95
Signals, Turn 86,181,276
Slippery Surfaces, Driving On 370

SmartBeams 177
Snow Chains (Tire Chains) 406
Snow Tires 408
Sound System
Kicker 328
Spare Tire 401,402,450
Spark Plugs 522
Specifications
Fuel (Gasoline) 420,522
Oil 522
Speed Control (Cruise Control) 196,199
Speedometer 280
Starting 26,348
Automatic Transmission 348
Cold Weather 351
Engine Fails to Start 351
Remote 26
Starting and Operating 348
Starting Procedures 348
Steering
Column Controls 180
Column Lock 190
Power 373
Tilt Column 190,191
Wheel, Heated 192
Wheel, Tilt 190,191
Steering Wheel Audio Controls 330
Steering Wheel Mounted Sound System
Controls 330
Storage 262,516
Storage, Vehicle 342,516
Storing Your Vehicle 516
Stuck, Freeing 462
Sun Roof 247,251
Sunglasses Storage 238
Supplemental Restraint System - Airbag 56
Sway Control, Trailer 435
Synthetic Engine Oil 481

System, Remote Starting 26

Tachometer 276
Telescoping Steering Column 190,191
Temperature Control, Automatic (ATC) 340
Temperature Gauge, Engine Coolant 284,449
Tether Anchor, Child Restraint 75
Theft Alarm (Security Alarm) 18
Theft System (Security Alarm) 18
Tilt Steering Column 190,191
Time Delay, Headlight 176
Tire and Loading Information Placard 393
Tire Identification Number (TIN) 391
Tire Markings 387
Tire Safety Information 387
Tires 86,397,549
    Aging (Life of Tires) 404
    Air Pressure 397
    Chains 406
    Changing 449,453
    Compact Spare 401
    Flat Changing 449
    General Information 397
    High Speed 400
    Inflation Pressures 398
    Jacking 452,453
    Life of Tires 404
    Load Capacity 393,394
    Pressure Monitor System (TPMS) 410
    Pressure Warning Light 277
    Quality Grading 549
    Radial 400
    Replacement 405
    Rotation 409
    Safety 387,397
    Sizes 389
    Snow Tires 408
    Spare Tire 450

Spinning 403
Trailer Towing 441
Tread Wear Indicators 404
Tongue Weight/Trailer Weight 438
Towing 433
Behind a Motorhome 445
Disabled Vehicle 467
Guide 437
Recreational 445
Weight 437
Towing Vehicle Behind a Motorhome 445
Traction Control 380
Trailer Towing 433
Cooling System Tips 445
Hitches 436
Minimum Requirements 439
Tips 444
Trailer and Tongue Weight 438
Wiring 442
Trailer Towing Guide 437
Trailer Weight 437
Transfer Case 501
Fluid 501,523
Maintenance 501
Transmission 499
Automatic 355,358,499
Fluid 523
Shifting 353
Transmitter Battery Service
(Remote Keyless Entry) 25
Transmitter Programming
(Remote Keyless Entry) 21
Transmitter, Garage Door Opener (HomeLink®) . . 238
Transmitter, Remote Keyless Entry (RKE) 21
Transporting Pets 81
Tread Wear Indicators 404
Trip Odometer 276
Trunk Lid (Deck Lid) 41,43

Trunk Release Remote Control 41
Trunk Release, Emergency 43
Turn Signals 181,276

UCI Connector 328
Uniform Tire Quality Grades 549
Universal Consumer Interface (UCI) Connector . . . 328
Universal Transmitter 238
Untwisting Procedure, Seat Belt 52

Vanity Mirrors 98
Vehicle Certification Label 431
Vehicle Identification Number (VIN) 6
Vehicle Loading 394,431,433
Vehicle Modifications/Alterations 7
Vehicle Storage 342,516
Vehicle Theft Alarm (Security Alarm) 18
Viscosity, Engine Oil 481
Warning Flasher, Hazard 448
Warning Lights
(Instrument Cluster Description) 276
Warnings and Cautions 6
Warranty Information 546
Washer
Adding Fluid 489
Washers, Windshield 188,489
Washing Vehicle 503
Water
Driving Through 371
Wheel and Wheel Trim 504
Wheel and Wheel Trim Care 504
Wind Buffeting 41,250,253
Window Fogging 342
Windows 38
Power 38
Windshield Defroster 84

Windshield Washers 186,188
Fluid 489
Windshield Wiper Blades 488
Windshield Wipers 186
Wiper Blade Replacement 488
Wipers, Intermittent 187
Wipers, Rain Sensitive 189

INSTALLATION OF RADIO TRANSMITTING EQUIPMENT

Special design considerations are incorporated into this vehicle's electronic system to provide immunity to radio frequency signals. Mobile two-way radios and telephone equipment must be installed properly by trained personnel. The following must be observed during installation.

The positive power connection should be made directly to the battery and fused as close to the battery as possible. The negative power connection should be made to body sheet metal adjacent to the negative battery connection. This connection should not be fused.

Antennas for two-way radios should be mounted on the roof or the rear area of the vehicle. Care should be used in mounting antennas with magnet bases. Magnets may affect the accuracy or operation of the compass on vehicles so equipped.

The antenna cable should be as short as practical and routed away from the vehicle wiring when possible. Use only fully shielded coaxial cable.

Carefully match the antenna and cable to the radio to ensure a low Standing Wave Ratio (SWR).

Mobile radio equipment with output power greater than normal may require special precautions.

All installations should be checked for possible interference between the communications equipment and the vehicle's electronic systems.

CHRYSLER

SERVICE

STICK WITH THE SPECIALISTS®

Chrysler Group LLC
12C481-126-AE

5th Edition

Printed in U.S.A.