2022

Stinger

Owner's Manual

Movement that inspires

WARNING – California Proposition 65

"Operating, servicing and maintaining a passenger vehicle or off-road vehicle can expose you to chemicals including engine exhaust, carbon monoxide, phthalates, and lead, which are known to the State of California to cause cancer and birth defects or other reproductive harm. To minimize exposure, avoid breathing exhaust, do not idle the engine except as necessary, service your vehicle in a well-ventilated area and wear gloves or wash your hands frequently when servicing your vehicle. For more information go to www.P65Warnings.ca.gov/passenger-vehicle."

FOREWORD

Dear Customer,

Thank you for selecting your new Kia vehicle.

As a global car manufacturer focused on building high-quality vehicles with exceptional value, Kia Motors is dedicated to providing you with a customer service experience that exceeds your expectations.

If technical assistance is needed on your vehicle, authorized Kia dealerships can provide you with factory-trained technicians, recommended special tools, and genuine Kia replacement parts.

This Owner's Manual will acquaint you with the operation of features and equipment that are either standard or optional on this vehicle, along with the maintenance needs of this vehicle. Therefore, you may find some descriptions and illustrations not applicable to your vehicle. You are advised to read this publication carefully and follow the instructions and recommendations. Please always keep this manual in the vehicle for your, and any subsequent owner's, reference.

All information contained in this Owner's Manual was accurate at the time of publication. However, as Kia continues to make improvements to its products, the company reserves the right to make changes to this manual or any of its vehicles at any time without notice and without incurring any obligations.

Please drive safely, and enjoy your Kia vehicle!

© 2021 KIA MOTORS AMERICA, Inc.

All rights reserved. May not be reproduced or translated in whole or in part without the written consent of Kia Motors America, Inc.

Printed in Korea

How to use this manual

We want to help you get the greatest possible driving pleasure from your vehicle. Your Owner's Manual can assist you in many ways.We strongly recommend that you read the entire manual. In order to minimize the chance of death or injury, you must read the WARNING and CAUTION sections in the manual.

Illustrations complement the words in this manual to best explain how to enjoy your vehicle. By reading your manual, you will learn about features, important safety information, and driving tips under various road conditions.

The general layout of the manual is provided in the Table of Contents. Use the index when looking for a specific area or subject; it has an alphabetical listing of all information in your manual.

Sections: This manual has eight sections plus an index. Each section begins with a brief list of contents so you can tell at a glance if that section has the information you want.

You will find various WARNINGs, CAUTIONs, and NOTICEs in this manual. These WARNINGs were prepared to enhance your personal safety. You should carefully read and follow ALL procedures and recommendations provided in these WARNINGs, CAUTIONs and NOTICEs.

⚠ WARNING

A WARNING indicates a situation in which harm, serious bodily injury or death could result if the warning is ignored.

⚠ CAUTION

A CAUTION indicates a situation in which damage to your vehicle could result if the caution is ignored.

✻ NOTICE

A NOTICE indicates interesting or helpful information is being provided.

Table of Contents

Introduction 1

Your vehicle at a glance 2

Safety features of your vehicle 3

Features of your vehicle 4

Driving your vehicle 5

What to do in an emergency 6

Maintenance 7

Specifications, Consumer information and Reporting safety defects 8

Abbreviation A

Index I

Introduction 1

Fuel requirements 1-2
Vehicle modifications 1-5
Vehicle break-in process 1-5
Risk of burns when parking or stopping vehicle..... 1-6
Vehicle data collection and event data recorders 1-6

Introduction

Fuel requirements

For the optimal engine performance, we recommend you use unleaded gasoline which has an octane rating of RON (Research Octane Number) 95/AKI (Anti Knock Index) 91 or higher.

Using Unleaded gasoline with an octane rating lower than RON 95 could result in loss of engine power and increase in fuel consumption.

Your new vehicle is designed to obtain maximum performance with UNLEADED FUEL, as well as minimize exhaust emissions and spark plug fouling.

Never add any fuel system cleaning agents to the fuel tank other than what has been specified. (Consult an authorized Kia dealer for details.)

- Tighten the cap until it clicks one time, otherwise the Check Engine light will illuminate.

WARNING

Refueling

- Do not "top off" after the nozzle automatically shuts off. Attempts to force more fuel into the tank can cause fuel overflow onto you and the ground causing a risk of fire.
- Always check that the fuel cap is installed securely to prevent fuel spillage, especially in the event of an accident.

Gasoline containing alcohol and methanol

Gasohol, a mixture of gasoline and ethanol (also known as grain alcohol), and gasoline or gasohol containing methanol (also known as wood alcohol) are being marketed along with or instead of leaded or unleaded gasoline.
Pursuant to EPA regulations, ethanol may be used in your vehicle.
Do not use gasohol containing more than 15% ethanol, and do not use gasoline or gasohol containing any methanol. Ethanol provides less energy than gasoline and it attracts water, and it is thus likely to reduce your fuel efficiency and could lower your MPG results.

Methanol may cause drivability problems and damage to the fuel system, engine control system and emission control system.
Discontinue using gasohol of any kind if drivability problems occur. Vehicle damage or drivability problems may not be covered by the manufacturer's warranty if they result from the use of:

1. Gasoline or gasohol containing methanol.
2. Leaded fuel or leaded gasohol.
3. Gasohol containing more than 15% ethanol.

"E85" fuel is an alternative fuel comprised of 85 percent ethanol and 15 percent gasoline, and is manufactured exclusively for use in Flexible Fuel Vehicles. "E85" is not compatible with your vehicle. Use of "E85" may result in poor engine performance and damage to your vehicle's engine and fuel system. Kia recommends that customers do not use fuel with an ethanol content exceeding 15%.

✻ NOTICE

Your New Vehicle Limited Warranty does not cover damage to the fuel system or any performance problems caused by the use of "E85" fuel.

✻ NOTICE

Never use any fuel containing methanol. Discontinue use of any methanol containing product which may inhibit proper drivability.

Other fuels

Using fuels that contain Silicone (Si), MMT (Manganese, Mn), Ferrocene (Fe), and Other metalic additives, may cause vehicle and engine damage or cause misfiring, poor acceleration, engine stalling, catalyst melting, clogging, abnormal corrosion, life cycle reduction, etc.
Also, the Malfunction Indicator Lamp (MIL) may illuminate.

✻ NOTICE

Damage to the fuel system or performance problem caused by the use of these fuels may not be covered by your New Vehicle Limited Warranty.

Gasoline containing MMT

Some gasoline contains harmful manganese- based fuel additives Such as MMT(Methylcyclopentadieny l Manganese Tricarbonyl). Kia does not recommend the use of gasoline containing MMT. This type of fuel can reduce vehicle performance and affect your emission control system. The Malfunction Indicator Lamp on the cluster may come on.

Do not use methanol

Fuels containing methanol (wood alcohol) should not be used in your vehicle. This type of fuel can reduce vehicle performance and damage components of the fuel system, engine control system and emission control system.

Fuel Additives

Kia recommends that you use good quality gasolines treated with detergent additives such as TOP TIER Detergent Gasoline, which help prevent deposit formation in the engine. These gasolines will help the engine run cleaner and enhance performance of the Emission Control System. For more information on TOP TIER Detergent Gasoline, please go to the website (www.toptiergas.com)

For customers who do not use TOP TIER Detergent Gasoline regularly, and have problems starting or the engine does not run smoothly, additives that you can buy separately may be added to the gasoline.

If TOP TIER Detergent Gasoline is not available, one bottle of additive should be added to the fuel tank at every 8,000 miles (13,000 km) (for Smartstream G2.5 T-GDi), 6,000 miles (10,000 km) (for (Gasoline) 3.3 T-GDi) or every engine oil change is recommended. Additives are available from your authorized Kia dealer along with information on how to use them. Do not mix other additives.

Operation in foreign countries

If you are going to drive your vehicle in another country, be sure to:

- Observe all regulations regarding registration and insurance.
- Determine that acceptable fuel is available.

Vehicle modifications

This vehicle should not be modified. Modification of your vehicle could affect its performance, safety or durability and may even violate governmental safety and emissions regulations.

In addition, damage or performance problems resulting from any modification may not be covered under warranty.

- If you use unauthorized electronic devices, it may cause the vehicle to operate abnormally, wire damage, battery discharge and fire. For your safety, do not use unauthorized electronic devices.

Vehicle break-in process

No special break-in period is needed. By following a few simple precautions for the first 600 miles (1,000 km) you may add to the performance, economy and life of your vehicle.

- Do not race the engine.
- While driving, keep your engine speed (rpm, or revolutions per minute) between 2,000 rpm and 4,000 rpm.
- Do not maintain a single speed for long periods of time, either fast or slow. Varying engine speed is needed to properly break-in the engine.
- Avoid hard stops, except in emergencies, to allow the brakes to seat properly.
- Don't tow a trailer during the first 1,200 miles (2,000 km) of operation.
- Fuel economy and engine performance may vary depending on vehicle break-in process and be stabilize after 4,000 miles (6,000 km). New engines may consume more oil during the vehicle break-in period.

Risk of burns when parking or stopping vehicle

- Do not park or stop the vehicle near flammable items such as leaves, paper, oil, and tire. Such items placed near the exhaust system can become a fire hazard.
- When an engine idles at a high rpm with the rear side of the vehicle in close proximity of the wall, heat of the exhaust gas can cause discoloration or fire. Keep enough space between the rear part of the vehicle and the wall.
- Be sure not to touch the exhaust/catalytic systems while engine is running or right after the engine is turned off. There is a risk of burns since the systems are extremely hot.

Vehicle data collection and event data recorders

This vehicle is equipped with an event data recorder (EDR). The main purpose of an EDR is to record, in certain crash or near crash-like situations, such as an air bag deployment or hitting a road obstacle, data that will assist in understanding how a vehicle's systems performed. The EDR is designed to record data related to vehicle dynamics and safety systems for a short period of time, typically 30 seconds or less. The EDR in this vehicle is designed to record such data as:

- How various systems in your vehicle were operating;
- Whether or not the driver and passenger safety belts were buckled/fastened;
- How far (if at all) the driver was depressing the accelerator and/or brake pedal; and,
- How fast the vehicle was traveling.

These data can help provide a better understanding of the circumstances in which crashes and injuries occur. NOTE: EDR data are recorded by your vehicle only if a non-trivial crash situation occurs; no data are recorded by the EDR under normal driving conditions and no personal data (e.g., name, gender, age, and crash location) are recorded. However, other parties, such as law enforcement, could combine the EDR data with the type of personally identifying data routinely acquired during a crash investigation.

To read data recorded by an EDR, special equipment is required, and access to the vehicle or the EDR is needed. In addition to the vehicle manufacturer, other parties, such as law enforcement, that have the special equipment, can read the information if they have access to the vehicle or the EDR.

Your vehicle at a glance 2

Exterior overview 2-2
Interior overview 2-4
Instrument panel overview 2-6
Engine compartment 2-8

Your vehicle at a glance

Exterior overview

Front view

OCK010001N

* The actual shape may differ from the illustration.

1. Hood	4-42
2. Head lamp (Features of your vehicle)	4-129
Head lamp (Maintenance)	7-75
3. Wheel and tire	7-43, 8-4
4. Outside rear view mirror	4-65
5. Wide sunroof	4-47
6. Front windshield wiper blades (Features of your vehicle)	4-137
Front windshield wiper blades (Maintenance)	7-37
7. Windows	4-37
8. Front ultrasonic sensors	4-122

Rear view

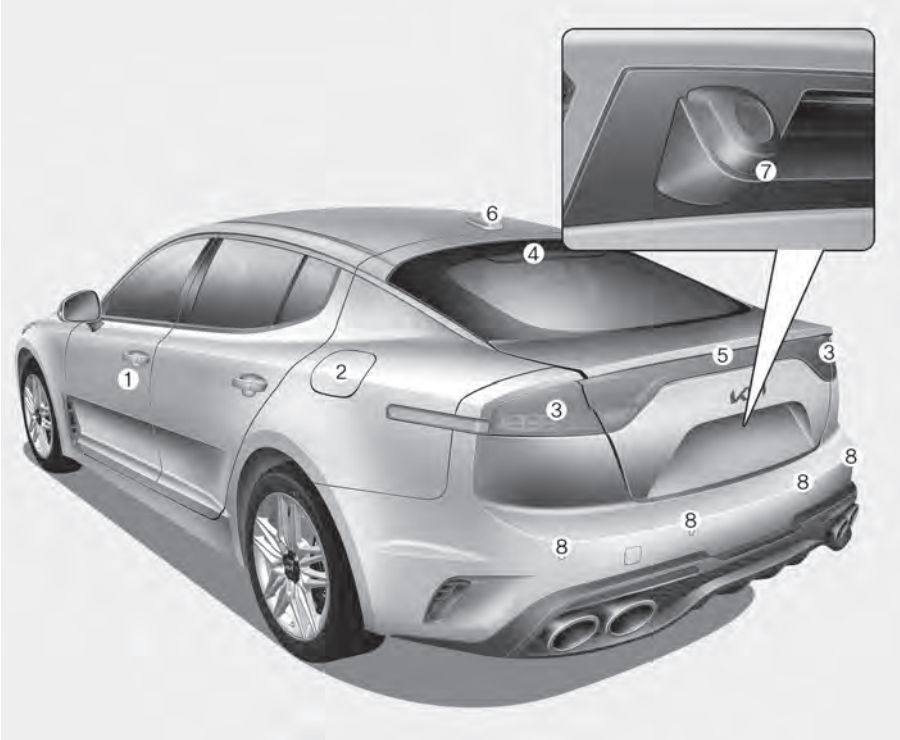

OCK010002N

* The actual shape may differ from the illustration.

1. Door locks	4-17
2. Fuel filler door	4-43
3. Rear combination lamp (Maintenance)	7-75
4. High mounted stop lamp (Maintenance)	7-75
5. Liftgate	4-26
6. Antenna	4-175
7. Rear view camera	4-107
8. Rear ultrasonic sensors	4-118, 4-122

Interior overview

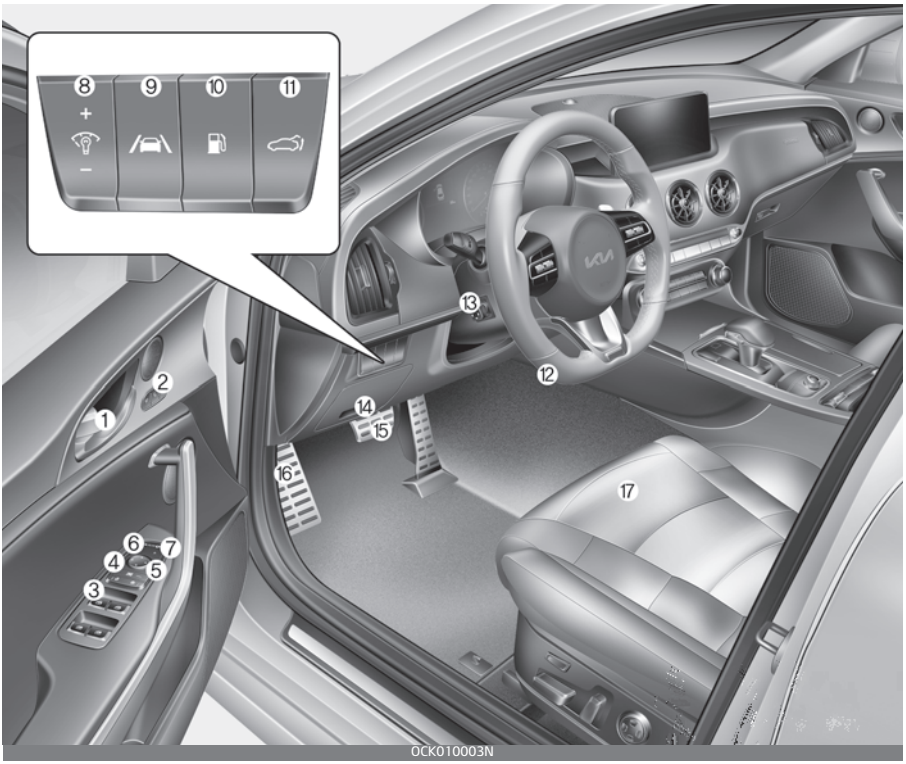

* The actual shape may differ from the illustration.

1. Inside door handle 4-18
2. Driver position memory button 3-12
3. Power window switch 4-37
4. Central door lock switch 4-19
5. Power window lock button 4-40
6. Outside rear view mirror control 4-65
7. Outside rear view mirror folding 4-67
8. Instrument panel illumination control 4-69
9. Lane Safety button 5-84
10. Fuel filler door open button 4-43
11. Power liftgate open button 4-27
12. Steering wheel 4-51
13. Tilt and telescopic steering control 4-52

14.Inner fuse panel 7-59
15.Brake pedal 5-41
16.Hood release lever 4-42
17.Seat 3-5

Instrument panel overview

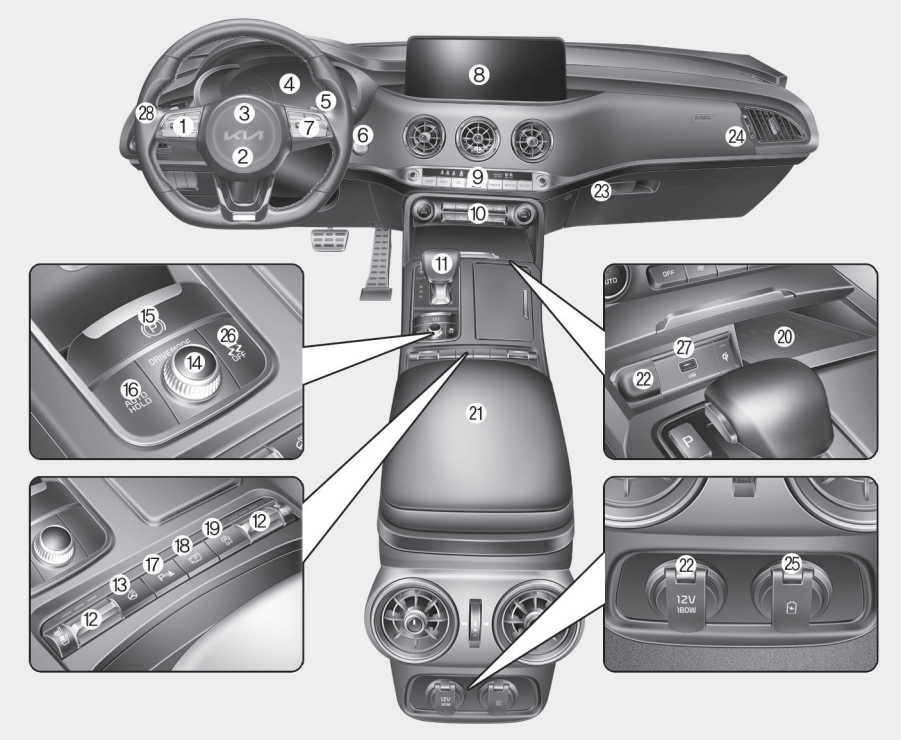

0CK010004N

* The actual shape may differ from the illustration.

1. Steering wheel audio control
   Refer to "Car Infotainment System Quick Reference Guide"
2. Driver's front air bag 3-56
3. Horn 4-54
4. Instrument cluster 4-68
5. Wiper/washer 4-136
6. ENGINE START/STOP button 5-8
7. Driving Assist button 5-112
8. Infotainment System
   Refer to "Car Infotainment System Quick Reference Guide".
9. Hazard warning flasher 6-3
10. Automatic climate control system 4-148

11.Shift lever A/T	5-15
Shift lever A/T (shift by wire)	5-22
12.Seat warmer	4-165
Air ventilation seat	4-166
13.Heated steering wheel button	4-53
14.DRIVE MODE button	5-62
15.Electronic parking brake (EPB) switch	5-43
16.Auto Hold On/Off button	5-48
17.Parking Safety button	4-120, 4-123
18.Parking/View button	4-109
19.ISG OFF button	5-14
20.Wireless smart phone charging system	4-169
21.Center console storage box	4-163
22.Power outlet	4-168
23.Glove box	4-163
24.Passenger's front air bag	3-56
25.USB charger	4-169
26.Electronic stability control (ESC)	5-53
27.USB port	4-175
28.Light control	4-128

Engine compartment

Smartstream G2.5 FR T-GDi

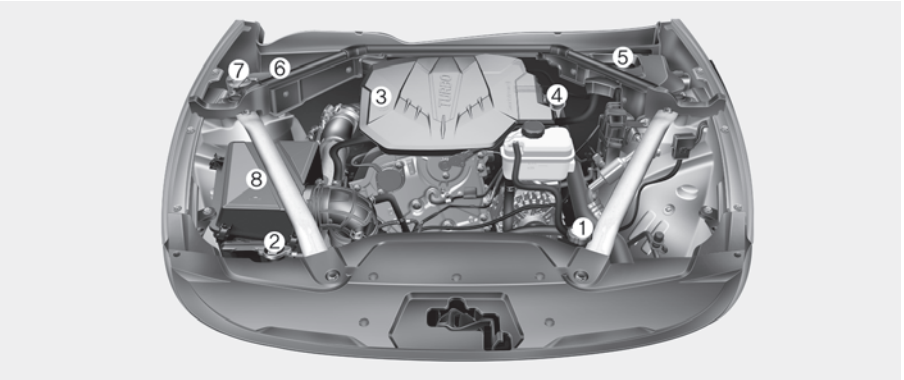

OCK070001N

(Gasoline) 3.3 T-GDi

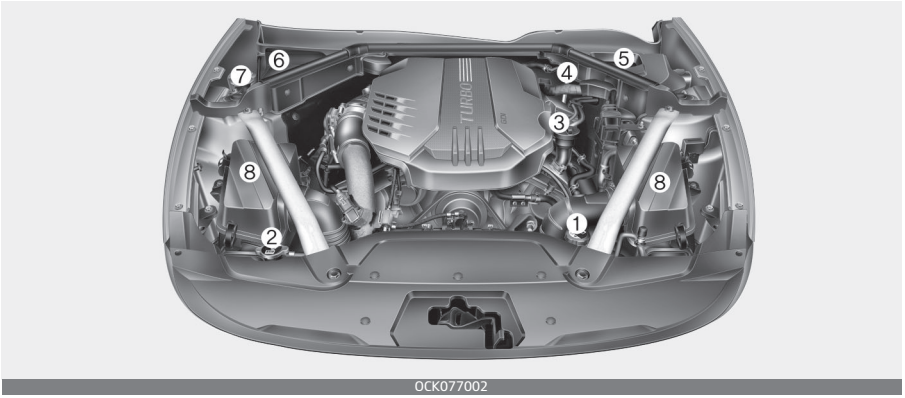

OCK077002

* The actual engine compartment in the vehicle may differ from the illustration.

* The battery is in the trunk.

1. Engine coolant reservoir 7-29
2. Radiator cap 7-29
3. Engine oil filler cap 7-26
4. Engine oil dipstick 7-26
5. Brake fluid reservoir 7-32
6. Fuse box 7-59
7. Windshield washer fluid reservoir 7-33
8. Air cleaner 7-34

Safety features of your vehicle 3

Important safety precautions 3-3
• Always wear your seat belt 3-3
• Restrain all children..... 3-3
• Air bag hazards..... 3-3
• Driver distraction..... 3-3
• Control your speed..... 3-4
• Keep your vehicle in safe condition..... 3-4
Seat 3-5
• Front seat adjustment - manual (for passenger's seat) 3-8
• Front seat adjustment - power..... 3-9
• Driver position memory system (if equipped, for power seat)..... 3-12
• Headrest (for front seat)..... 3-14
• Seatback pocket 3-17
• Rear seat adjustment..... 3-17
Seat belts 3-22
• Seat belt restraint system 3-22
• Pre-tensioner seat belt..... 3-28
• Seat belt precautions..... 3-30
• Care of seat belts 3-32
Child Restraint System (CRS) 3-33
• Children Always in the Rear..... 3-33
• Selecting a Child Restraint System (CRS) 3-34
• Installing a Child Restraint System (CRS)..... 3-36
Air bag - advanced supplemental restraint system..... 3-43
• How does the air bag system operate? 3-44
• Air bag warning light..... 3-46
• SRS components and functions 3-46
• Occupant Detection System (ODS)..... 3-49

3 Safety features of your vehicle

- Driver's and passenger's front air bag.....3-56
- Side air bag 3-59
- Curtain air bag.....3-61
- SRS Care 3-67
- Adding equipment to or modifying your air bag-equipped vehicle 3-68
- Air bag warning label 3-68

Safety features of your vehicle

Important safety precautions

You will find many safety precautions and recommendations throughout this section, and throughout this manual. The safety precautions in this section are among the most important.

Always wear your seat belt

A seat belt is your best protection in all types of accidents. Air bags are designed to supplement seat belts, not replace them. So even though your vehicle is equipped with air bags, ALWAYS make sure you and your passengers wear your seat belts, and wear them properly.

Restrain all children

All children under age 13 should ride in your vehicle properly restrained in a rear seat, not the front seat. Infants and small children should be restrained in an appropriate child restraint. Larger children should use a booster seat with the lap/shoulder belt until they can use the seat belt properly without a booster seat.

Air bag hazards

While air bags can save lives, they can also cause serious or fatal injuries to occupants who sit too close to them, or who are not properly restrained. Infants, young children, and shorter adults are at the greatest risk of being injured by an inflating air bag. Follow all instructions and warnings in this manual.

Driver distraction

Driver distraction presents a serious and potentially deadly danger, especially for inexperienced drivers. Safety should be the first concern when behind the wheel and drivers need to be aware of the wide array of potential distractions, such as drowsiness, reaching for objects, eating, personal grooming, other passengers, and using cellular phones.

Drivers can become distracted when they take their eyes and attention off the road or their hands off the wheel to focus on activities other than driving. To reduce your risk of distraction or getting into an accident:

- ALWAYS set up your mobile devices (i.e., MP3 players, phones, navigation units, etc.) when your vehicle is parked or safely stopped.
- ONLY use your mobile device when allowed by laws and when conditions permit safe use. NEVER text or email while driving. Most states have laws prohibiting drivers from texting. Some states and cities also prohibit drivers from using handheld phones.
- NEVER let the use of a mobile device distract you from driving. You have a responsibility to your passengers and others on the road to always drive safely, with your hands on the wheel as well as your eyes and attention on the road.

Control your speed

Excessive speed is a major factor in crash injuries and deaths. Generally, the higher the speed, the greater the risk, but serious injuries can also occur at lower speeds. Never drive faster than is safe for current conditions, regardless of the maximum speed posted.

Keep your vehicle in safe condition

Having a tire blowout or a mechanical failure can be extremely hazardous. To reduce the possibility of such problems, check your tire pressures and condition frequently, and perform all regularly scheduled maintenance.

Seat

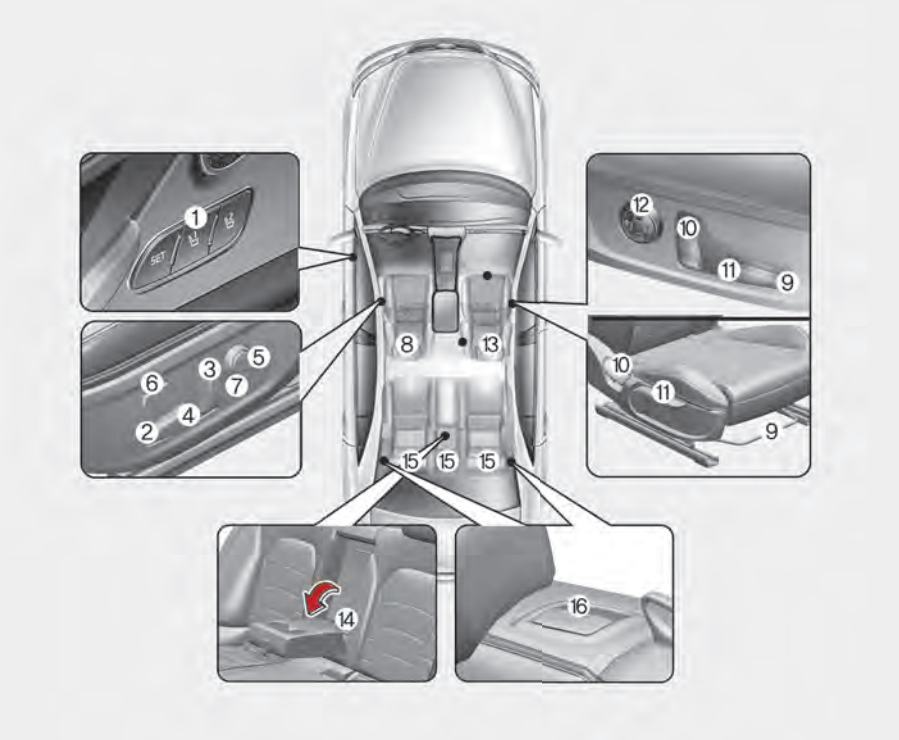

OCK030001L

* The actual seat design in the vehicle may differ from the illustration.

Driver's seat

1. Driver position memory system*
2. Forward and backward
3. Seatback angle
4. Seat cushion height
5. Lumbar support*
6. Cushion extension*
7. Seat back bolster control *
8. Headrest

Front Passenger's seat

9. Forward and backward
10. Seatback angle
11. Seat cushion height
12. Lumbar support*
13. Headrest

Rear seat

14. Armrest
15. Headrest
16. Seatback folding lever

* : if equipped

WARNING

Loose objects

Do not place anything in the driver's footwell or under the front seats. Loose objects in the driver's foot area could interfere with the operation of the foot pedals.

WARNING

Driver responsibility for passengers

ODEEV058002NR

The driver must advise the passengers to keep the seatback in an upright position whenever the vehicle is in motion. If a seat is reclined during an accident, the restraint system's ability to restrain will be greatly reduced.

WARNING

Seat cushion

Occupants should never sit on aftermarket seat cushions or sitting cushions. The passenger's hips may slide under the lap portion of the seat belt during an accident or a sudden stop.

WARNING

Driver's seat

- Never attempt to adjust the seat while the vehicle is moving. This could result in loss of control of your vehicle.
- Do not allow anything to interfere with the normal position of the seatback. Storing items against the seatback could result in serious or fatal injury in a sudden stop or collision.
- Sit as far back as possible from the steering wheel while still maintaining comfortable control of the your vehicle. A distance of at least 10" from your chest to the steering wheel is recommended. Failure to do so can result in air bag inflation injuries to the driver.

WARNING

Rear seatbacks

Always lock the rear seatback before driving. Failure to do so could result in passengers or objects being thrown forward injuring vehicle occupants.

⚠ WARNING

Luggage and Cargo

Do not stack pile or stack luggage or cargo higher than the seatback in the cargo area. In an accident the cargo could strike and injury a passenger. If objects are large, heavy or must be piled, they must be secured in the cargo area.

⚠ WARNING

Cargo Area

Do not allow passengers to ride in the cargo area under any circumstance. The cargo area is solely for the purpose of transporting luggage or cargo.

⚠ WARNING

Seat adjustment

- Do not adjust the seat while wearing seat belts.Moving the seat forward will cause strong pressure on the abdomen.
- Do not place your hand near the seat bottom or seat track while adjusting the seat. Your hand could get caught in the seat mechanism.

⚠ WARNING

Small Objects

Use extreme caution when picking up small objects trapped under the seats or between the seat and the center console. Your hands might be cut or injured by the sharp edges of the seats mechanism.

3

Feature of Seat Leather

- Leather is made from the outer skin of an animal, which goes through a special process to be available for use. Since it is a natural substance, each part differs in thickness or density.
  Wrinkles may appear as a natural result of stretching and shrinking depending on the temperature and humidity.
- The seat cover is made of stretchable material to improve comfort of passengers.
- The parts contacting the body are curved and the side supporting area is high which provides driving comfort and stability.
- Wrinkles may appear naturally from usage. It is not a fault of the product.

⚠ CAUTION

- Belts with metallic accessories, zippers or keys inside your back

pants pocket may damage the seat fabric.
- Make sure not to wet the seat. It may change the nature of natural leather.
- Jeans or clothes which contain bleach may contaminate the surface of the seat covering fabric and cause damage or discoloration.

✻ NOTICE

Wrinkles or abrasions which appear naturally from usage are not covered by warranty.

Front seat adjustment – manual (for passenger's seat)

Forward and backward

OCK030002

To move the seat forward or backward:
1. Pull the seat slide adjustment lever up and hold it.
2. Slide the seat to the position you desire.
3. Release the lever and make sure the seat is locked in place.

Adjust the seat before driving, and make sure the seat is locked securely by trying to move forward and backward without using the lever. If the seat moves, it is not locked properly.

Seatback angle

OCK030003

To recline the seatback:
1. Lean forward slightly and lift up the seatback recline lever.
2. Carefully lean back on the seat and adjust the seatback of the seat to the position you desire.
3. Release the lever and make sure the seatback is locked in place. (The lever MUST return to its original position for the seatback to lock.)

Seat cushion height (if equipped)

To change the height of the seat cushion, push the lever that is located on the outside of the seat cushion upwards or downwards.

- To lower the seat cushion, push the lever down several times.
- To raise the seat cushion, pull the lever up several times.

Front seat adjustment – power (if equipped)

The front seat can be adjusted by using the control switches located on the outside of the seat cushion. Before driving, adjust the seat to the proper position so you can easily control the steering wheel, pedals and switches on the instrument panel.

⚠ WARNING

Unattended children

Do not leave children unattended in the vehicle. Children might operate features of the vehicle that could injure them.

⚠ CAUTION

Power seat adjustments

The power seating controls function by electronic motor.

Excessive operation may cause damage to the electrical equipment.

⚠ CAUTION

Power Seating

Do not operate two or more power seat control switches at the same time. Doing so may damage the power seat motor or electrical components.

When in operation, the power seat consumes a large amount of electrical power. To prevent unnecessary system drain, don't adjust the power seat longer than necessary while the engine is not running.

Forward and backward

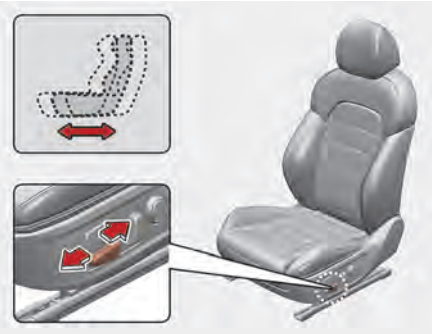

OCK030004

Push the control switch forward or backward to move the seat to the desired position. Release the switch once the seat reaches the desired position.

Cushion extension (for driver's seat, if equipped)

To move the front part of cushion forward:

OCK030005

1. Push the front part of control switch to move the seat cushion to the desired length.
2. Release the switch once the seat cushion reaches the desired length.

To move the front part of cushion rearward:

1. Push the rear part of control switch to move the seat cushion to the desired length.
2. Release the switch once the seat cushion reaches the desired length.

Seatback angle

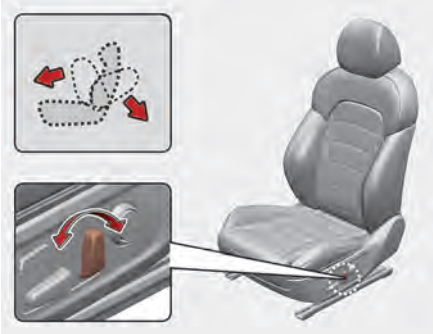

OCK030006

Push the control switch forward or backward to move the seatback to the desired angle. Release the switch once the seat reaches the desired position.

Seat height

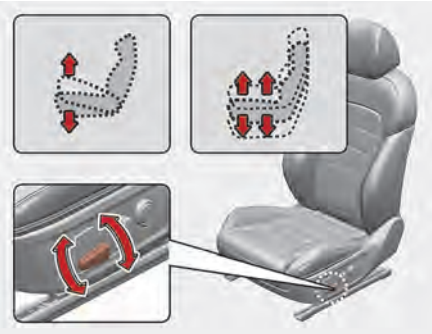

OCK030007

Pull the front portion of the control switch up to raise or press down to lower the front part of the seat cushion. Pull the rear portion of the control switch up to raise or press down to lower the seat cushion. Release the switch once the seat reaches the desired position.

Lumbar support (if equipped)

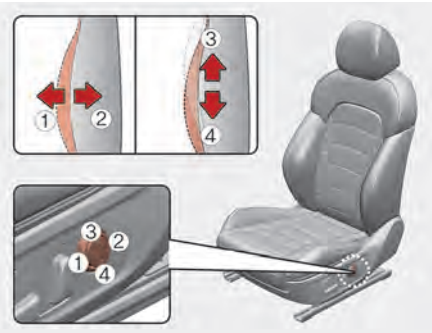

OCK030009

The lumbar support can be adjusted by pressing the lumbar support switch on the side of the seat.

1. Press the front portion (1) of the switch to increase support, or the rear portion (2) of the switch, to decrease support.
2. Release the switch once it reaches the desired position.
3. Press the upper portion (3) of the switch to move the support position up, or press the lower portion (4) of the switch, to move the support position down.
4. Release the switch once it reaches the desired position.

Seat back bolster control (if equipped, for power seat)

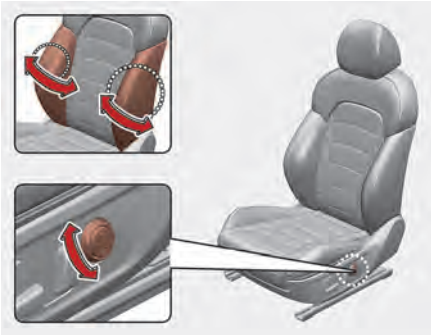

OCK030008

1. Turn the adjustment switch clockwise, the right/left seatback bolsters will be adjusted inward. Turn the switch counterclockwise, the seatback bolster will be adjusted outward.
2. To adjust the bolster height to its maximum in the default state, operate the switch for 8 seconds. After that, release the switch because there is no change in height even if you continue to operate the switch.

3. Once adjustment is done, leave the switch in place.

Driver position memory system (if equipped, for power seat)

Driving Position Memory System is the facility that enables driver's seat, steering wheel, outside rear view mirrors and head-up display (HUD) to be controlled with a simple button operation, which allows a driver to recall memorized driving positions to suit your preferences.

- Driver's seat/Steering Wheel / Exterior mirrors: position
- Head up Display (HUD): position

⚠ WARNING

Never attempt to operate the driver position memory system while the vehicle is moving.

This could result in loss of control, and an accident causing death, serious injury, or property damage.

Storing positions into memory using the buttons on the door

Storing driver's seat positions

1. Press the Parking button while the engine start/stop button is ON.
2. Adjust the driver's seat and outside rearview mirror and Head up display comfortable for the driver.
3. Press SET button on the control panel. The system will beep once.
4. Press one of the memory buttons (1 or 2) within 5 seconds after pressing the SET button. The system will beep twice when memory has been successfully stored.

Recalling positions from memory

1. Press the Parking button while the engine start/stop button is ON.
2. To recall the position in the memory, press the desired memory button (1 or 2). The system will beep once, then the driver's seat will automatically adjust to the stored position.

Adjusting the control switch for the driver's seat while the system is recalling the stored position will cause the movement to stop and move in the direction that the control switch is moved.

⚠ WARNING

Use caution when recalling the adjustment memory while sitting in the vehicle. Push the seat position control switch to the desired position immediately if the seat moves too far in any direction.

Easy access function (if equipped)

To provide easier entry to or exit from the vehicle for a driver, the driver's seat will be adjusted backwards as far as the distance set by User Setting on the Instrument Panel. This occurs when the driver's door is opened and the Engine start/stop button is Off with the shift lever in the P position. If, however, the distance between the front seat and back seats are too close, the driver's seat could fail to adjust itself backwards.

The steering wheel moves to the top. With the steering wheel moving as far as top and as far as forward to a driver on a regular basis (once every 100 ignitions switched on), the steering wheel identifies and adjusts its location by itself.

The driver's seat and steering wheel will move back to its original position when a driver closes a driver's door with a smart key in his pocket and the engine start/stop button is in OFF or in ACC.

You can activate or deactivate this feature. Refer to "LCD display modes" on page 4-75.

Driver position memory system reset

If the Driver position memory system reset fails to work, initialize the system as follows.

How to initialize:

1. Stop the car and open the driver's door with the Engine start/stop button in ON and the automatic shift lever in P(parking) position.
2. Pull the driver's seat forward as far as possible and have the seatback upright as much as possible using driver's seat forward/backward adjustment and seatback angle (recline) movement switches.
3. Push SET button and and seat fore movement switch button for 2 seconds simultaneously.

Initialization in the process :

1. Initialization begins as the alarm sounds.
2. The seat and seatback will automatically move backwards. The alarm sound will continue while the system is in operation.
3. Initialization will be all set after the seat and seatback move to the center with alarm sound being raised. If, however, cases as follows occur, the initialization pro-

cess will come to a stop and the alarm sound will stop as well.

- When pushing driving position memory system button
- When pushing driver's seat height adjustment switch
- When changing the shift lever from P position to other positions
- When the driving speed exceeds 2 mph (3 km/h)
- When the driver's door is closed

Headrest (for front seat)

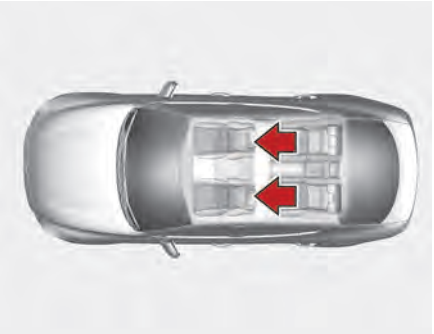

OCK030096L

The driver's and front passenger's seats are equipped with a headrest for the occupant's safety and comfort.

The headrest not only provides comfort for the driver and front passenger, but also helps protect the head and neck in the event of a collision.

WARNING

- For maximum effectiveness in case of an accident, the headrest should be adjusted so the middle of the headrest is at the same height of the center of gravity of an occupant's head. Generally, the center of gravity of most people's head is similar with the height of the top of their eyes. Also, adjust the headrest as close to your head as possible. For this reason, the use of a cushion that holds the body away from the seatback is not recommended.
- Do not operate the vehicle with the headrests removed. Severe injury to the occupants may occur in the event of an accident. Headrests may provide protection against neck injuries when properly adjusted.
- Do not adjust the headrest position of the driver's seat while the vehicle is in motion.

Adjusting the height up and down

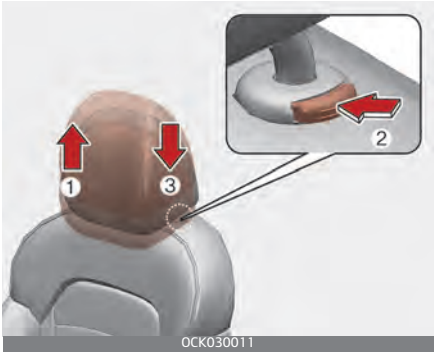

To raise the headrest, pull it up to the desired position (1). To lower the headrest, push and hold the release button (2) and lower the headrest to the desired position (3).

Forward and backward adjustment

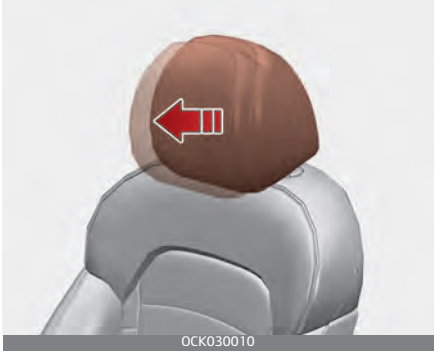

The headrest may be adjusted forward to 4 different positions by pulling the headrest forward to the desired detent.

To adjust the headrest to it's furthest backwards position, Pull the headrest fully forward to the farthest position and release it.

Adjust the headrest so that it properly supports the head and neck.

⚠ CAUTION

If you recline the seatback towards the front with the headrest and seat cushion raised, the headrest may come in contact with the sun visor or other parts of the vehicle.

Removal/Reinstall

Type A

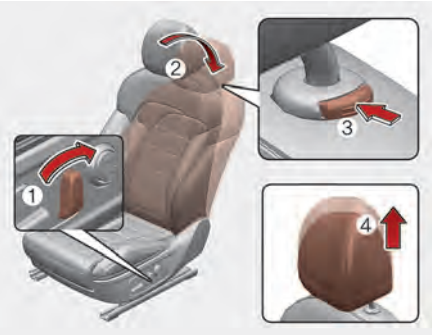

OCK030012

Type B

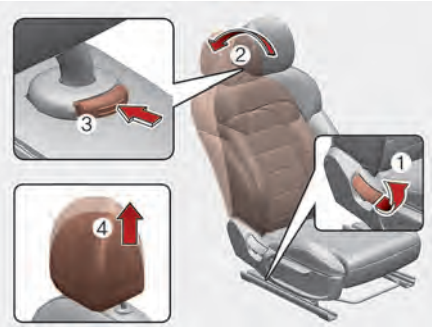

OCK030013

To remove the headrest:

1. Recline the seatback (2) with the recline lever or switch (1).
2. Raise headrest as far as it can go.
3. Press the headrest release button (3) while pulling the headrest up (4).

⚠ WARNING

NEVER allow anyone to ride in a seat with the headrest removed.

Type A

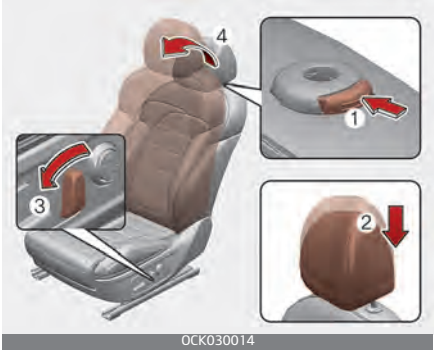

OCK030014

Type B

OCK030015

To reinstall the headrest:

1. Put the headrest poles (2) into the holes while pressing the release button or switch (1).
2. Recline the seatback(4) with the recline lever or switch (3).
3. Adjust the headrest to the appropriate height.

⚠ WARNING

Always make sure the headrest locks into position after reinstalling and adjusting it properly.

Seatback pocket

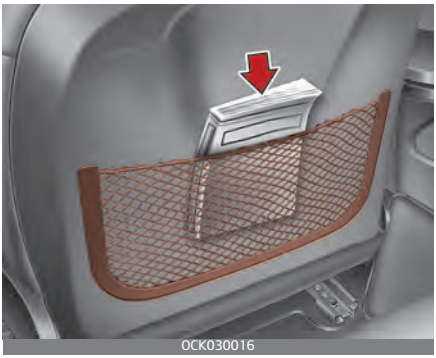

The seatback pocket is provided on the back of the front passenger's and driver's seatbacks.

⚠ WARNING

Seatback pockets

Do not put heavy or sharp objects in the seatback pockets. In an accident they could come loose from the pocket and injure vehicle occupants.

Rear seat adjustment

Headrest

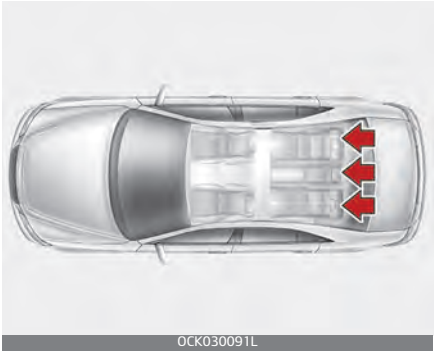

The rear seat is equipped with headrests in all the seating positions for the occupant's safety and comfort.

The headrest not only provides comfort for passengers, but also helps protect the head and neck in the event of a collision.

For maximum effectiveness in case of an accident, the headrest should be adjusted so the middle of the headrest is at the same height of the center of gravity of an occupant's head. Generally, the center of gravity of most people's heads is similar with the height as the top of their eyes.

Also, adjust the headrest as close to your head as possible. For this reason, the use of a cushion that holds the body away from the seatback is not recommended.

WARNING

OJA030058

- For maximum effectiveness in case of an accident, the headrest should be adjusted so the middle of the headrest is at the same height of the center of gravity of an occupant's head. Generally, the center of gravity of most people's head is similar with the height of the top of their eyes. Also adjust the headrest as close to your head as possible. For this reason, the use of a cushion that holds the body away from the seatback is not recommended.
- Do not operate the vehicle with the headrests removed. Severe injury to an occupant may occur in the event of an accident. Head-rests may provide protection against severe neck injuries when properly adjusted.

Adjusting the height up and down

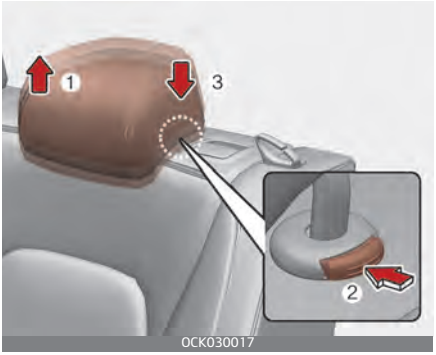

OCK030017

To raise the headrest, pull it up to the desired position (1). To lower the headrest, push and hold the release button (2) on the headrest support and lower the headrest to the desired position (3).

CAUTION

When there is no occupant in the rear seats, adjust the height of the headrest to the lowest position. The rear seat headrest can reduce the visibility of the rear area.

Removal and reinstallation

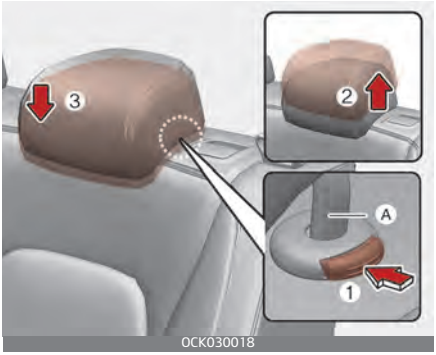

OCK030018

To remove the headrest, raise it as far as it can go then press the release button (1) while pulling the headrest upward (2).

To reinstall the headrest, put the headrest poles (3) into the holes while pressing the release button (1). Then adjust it to the appropriate height.

⚠ CAUTION

Make sure the headrest locks in position after adjusting it to properly protect the occupants.

Armrest

OCK030019

To use the armrest, pull it forward from the seatback.

Cup holders are in the arm rest.

Folding the rear seat

The rear seatbacks may be folded to facilitate carrying long items or to increase the luggage capacity of the vehicle.

⚠ WARNING

The purpose of the fold-down rear seatbacks is to allow you to carry longer objects that could not otherwise be accommodated.

Never allow passengers to sit on top of the folded down seatback while the car is moving as this is not a proper seating position and no seat belts are available for use. This could result in serious injury or death in case of an accident or sudden stop. Objects carried on the folded down seatback should not

extend higher than the top of the front seats. This could allow cargo to slide forward and cause injury or damage during sudden stops.

To fold down the rear seatback

1. Make sure the rear seat belt webbing is in the guide to prevent the seat belt from being damaged.
2. Set the front seatback to the upright position and if necessary, slide the front seat forward.
3. Lower the rear headrests to the lowest position.

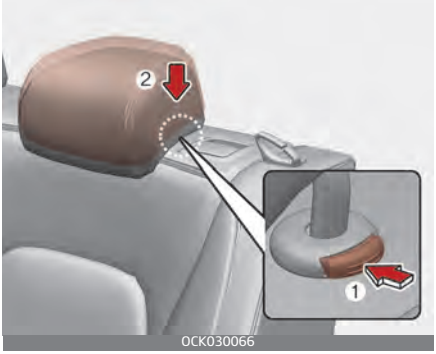

OCK030066

4. Pull on the seatback folding lever(1), then fold the seat toward the front of the vehicle.

OCK030067N

5. To use the rear seat, lift and push the seatback backward. Push the seat back firmly until it clicks into place. Make sure the seatback is locked in place.

OCK030068N

6. Return the rear seat belt to the proper position.

⚠ CAUTION

Be careful when loading cargo through the rear passenger seats to prevent damage to the vehicle interior.

⚠ WARNING

After folding the rear seat, unless the driver's position is properly set according to the driver's physical figure, do not fold the rear seat. It may increase body injuries in a sudden stop or collision.

⚠ WARNING

Uprighting seat

When you return the seatback to its upright position, hold the seatback and return it slowly. If the seatback is returned without holding it, the back of the seat could spring forward resulting in injury caused by being struck by the seatback.

⚠ WARNING

When you return the rear seatback to its upright position after being folded down:

Be careful not to damage the seat belt webbing or buckle. Do not allow the seat belt webbing or buckle to get caught or pinched in the rear seat. Ensure that the seatback is completely locked into its upright position by pushing on the top of the seatback. Otherwise, in an accident or sudden stop, the seat could fold down and allow cargo enter the passenger compartment, which could result in serious injury or death.

⚠ CAUTION

Damaging rear seat belt buckles

When you fold the rear seatback, insert the buckle between the rear seatback and cushion. Doing so can prevent the buckle from being damaged by the rear seatback.

⚠ CAUTION

Rear seat belts

When returning the rear seatbacks to the upright position, remember to return the rear shoulder belts to their proper position.

⚠ WARNING

Cargo

Cargo should always be secured to prevent it from being thrown about the vehicle in a collision and causing injury to the vehicle occupants. Do not place objects in the rear seats, since they cannot be properly secured and may hit the front seat occupants in a collision.

⚠ WARNING

Cargo loading

Make sure the engine is off, the transmission is in P (Park) and the parking brake is securely applied whenever loading or unloading cargo. Failure to take these steps may allow the vehicle to move if the shift lever is inadvertently moved to another position.

⚠ WARNING

Objects

Objects carried on the folded down seatback should not extend higher than the top of the front seat-backs.This could allow cargo to slide forward and cause injury or damage during sudden stops.

Seat belts

Seat belt restraint system

- For maximum restraint system protection, the seat belts must always be used whenever the vehicle is moving. A properly positioned shoulder belt should be positioned midway over your shoulder across your collarbone.
- Never allow children to ride in the front passenger seat. See child restraint system section for further discussion.

⚠ WARNING

Twisted seat belt

Make sure your seat belt is not twisted when worn. A twisted seat belt may not properly protect you in an accident and could even cut into your body.

⚠ WARNING

Shoulder Belt

- Never wear the shoulder belt under your arm or behind your back. An improperly positioned shoulder belt cannot protect the occupant in a crash.
- Always wear both the shoulder portion and lap portion of the lap/shoulder belt.

⚠ WARNING

Damaged seat belt

Replace the entire seat belt assembly if any part of the webbing or hardware is damaged as you can no longer be sure that a damaged seat belt will provide protection in a crash.

Seat belts are designed to bear upon the bony structure of the body, and should be worn low across the front of the pelvis, chest and shoulders, as applicable; wearing the lap section of the belt across the abdominal area must be avoided.

Seat belts should be adjusted as firmly as possible, consistent with comfort, to provide the protection for which they have been designed.

A slack belt will greatly reduce the protection afforded to the wearer.

Care should be taken to avoid contamination of the webbing with polishes, oils and chemicals, and particularly battery acid. Cleaning may safely be carried out using mild soap and water. The belt should be replaced if webbing becomes frayed, contaminated or damaged.

- No modifications or additions should be made by the user which would either prevent the seat belt adjusting devices from operating to remove slack, or prevent the seat belt assembly from being adjusted to remove slack.
- When you fasten the seat belt, be careful not to latch the seat belt in buckles of other seats. It's very dangerous and you may not be protected by the seat belt properly.
- Do not unfasten the seat belt and do not fasten and unfasten the seat belt repeatedly while driving. This could result in loss of control, and an accident causing death, serious injury, or property damage.
- When fastening the seat belt, make sure that the seat belt does not pass over objects that are hard or can break easily.

⚠ WARNING

Seat belt buckle

Do not allow foreign material (gum, crumbs, coins, etc.) to obstruct the seat belt buckle. This may prevent the seat belt from fastening securely.

Seat belt warning

Driver's seat belt warning

As a reminder to the driver, the seat belt warning light will illuminate for approximately 6 seconds each time you turn the engine start/stop button is in ON regardless of belt fastening and warning chime will sound for approximately 6 seconds each time you turn the engine start/stop button is in ON when the belt is unfastened.

If a driver continue not to fasten the seat belt and drive below 12 mph (20km/h), the warning light will stay illuminated.

If a driver continue not to fasten the seat belt while driving over 12 mph (20km/h), the seat belt warning chime will sound for approximately 100 seconds and the corresponding warning light will blink.

If a driver unfasten the seat belt while driving below 12 mph (20km/h), the warning light will stay illuminated.

If a driver unfasten the seat belt while driving over 12 mph (20km/h), the seat belt warning chime will sound for approximately 100 seconds and the corresponding warning light will blink.

Front passenger's seat belt warning (if equipped)

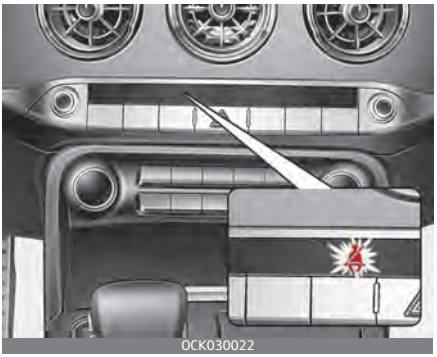

As a reminder to the front passenger, the front passenger's seat belt warning lights will illuminate for approximately 6 seconds each time you turn the Engine start/stop button in ON regardless of belt fastening.

If the front passenger continue not to fasten the seat belt and drive below 12 mph (20km/h), the warning light will stay illuminated.

If the front passenger continue not to fasten the seat belt while driving over 12 mph (20km/h), the seat belt warning chime will sound for approximately 100 seconds and the corresponding warning light will blink.

If the front passenger unfasten the seat belt while driving below 12 mph

(20km/h), the warning light will stay illuminated.

If the front passenger unfasten the seat belt while driving over 12 mph (20km/h), the seat belt warning chime will sound for approximately 100 seconds and the corresponding warning light will blink.

Lap/shoulder belt

Height adjustment

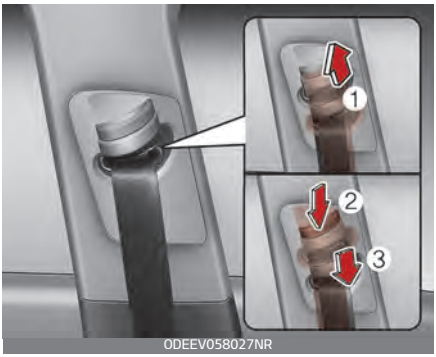

You can adjust the height of the shoulder belt anchor to one of 4 positions for maximum comfort and safety.

The height of the adjusting seat belt should not be too close to your neck. Otherwise, you will not be getting the most effective protection. The shoulder portion should be adjusted so that it lies across your chest and midway over your shoulder near the door and not your neck.

To adjust the height of the seat belt anchor, lower or raise the height adjuster into an appropriate position.

To raise the height adjuster, pull it up (1). To lower it, push it down (3) while pressing the height adjuster button (2).

Release the button to lock the anchor into position. Try sliding the height adjuster to make sure that it has locked into position.

Improperly positioned seat belts can cause serious injuries in an accident.

⚠ WARNING

Shoulder belt positioning

Never position the shoulder belt across your neck or face.

⚠ WARNING

Seat belt replacement

Replace your seat belts after being in an accident. Failure to replace seat belts after an accident could leave you with damaged seat belts that will not provide protection in the event of another collision.

To fasten your seat belt:

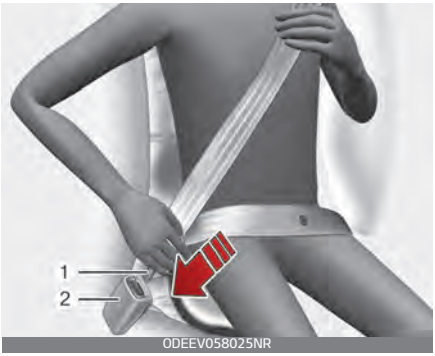

To fasten your seat belt, pull it out of the retractor and insert the metal tab (1) into the buckle (2). There will be an audible "click" when the tab locks into the buckle.

The seat belt automatically adjusts to the proper length only after the lap belt portion is adjusted manually so that it fits snugly around your hips. If you lean forward in a slow, easy motion, the belt will extend and let you move around. If there is a sudden stop or impact, however, the belt will lock into position. It will also lock if you try to lean forward too quickly.

NOTICE

If you are not able to pull out the seat belt from the retractor, firmly pull the belt out and release it. Then you will be able to pull the belt out smoothly.

WARNING

You should place the lap belt portion as low as possible and snugly across your hips, not on your waist. If the lap belt is located too high on your waist, it may increase the chance of injury in the event of a collision. Both arms should not be under or over the belt. Rather, one should be over and the other under, as shown in the illustration.

Never wear the seat belt under the arm near the door.

Pull the metal tab (B) and insert it (B) into the buckle (B'). There will be an audible “click” when the tab locks into the buckle. Make sure the belt is not twisted.

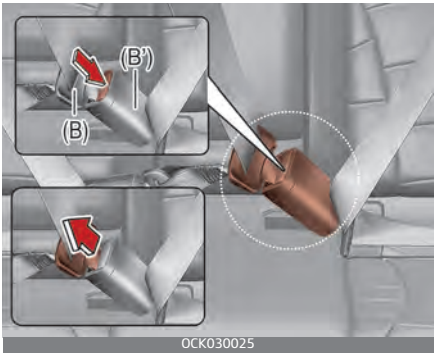

OCK030025

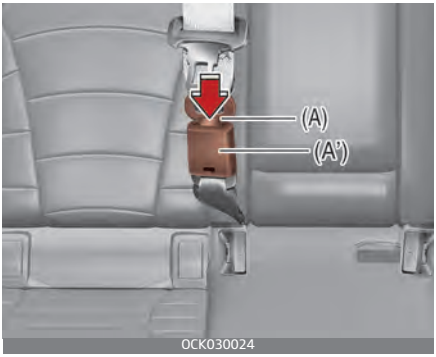

OCK030024

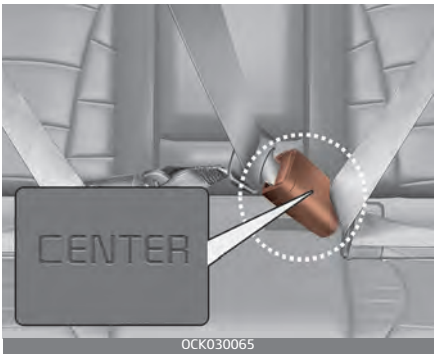

OCK030065

When using the rear center seat belt the buckle with the "CENTER" mark must be used.

⚠ WARNING

Always have the metal tab(A) inserted into the buckle (A').

✻ NOTICE

If you are not able to pull out the safe-ty belt from the retractor, firmly pull the belt out and release it. After release, you will be able to pull the belt out smoothly.

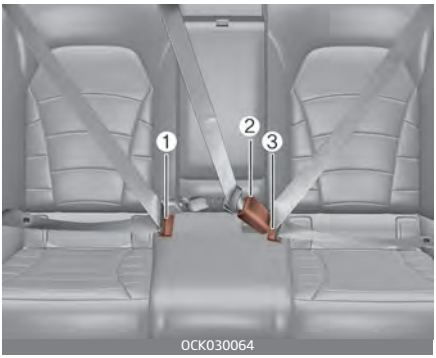

OCK030064

The seat belt should be locked into the buckle on each seat cushion to be properly fastened.

(1) : Rear right seat belt fastening buckle

(2) : Rear center seat belt fastening buckle

(3) : Rear left seat belt fastening buckle

⚠ CAUTION

Do not force to lock the left or right seat belt into the center seat belt buckle.

Make sure to lock the rear ceter seat belt into the center seat belt buckle.

If not, the improperly fastened seat belt will not be able to provide protection.

To release the seat belt:

ODEEV058078NR

The seat belt is released by pressing the release button (1) in the locking buckle. When it is released, the belt should automatically draw back into the retractor.

If this does not happen, check the belt to be sure it is not twisted, then try again.

Pre-tensioner seat belt

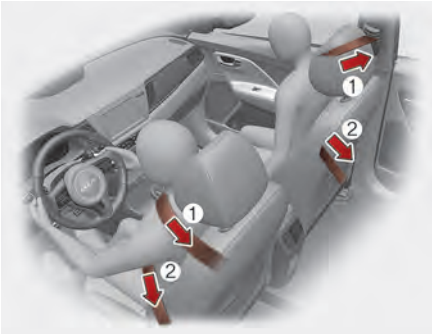

OCK050365N

Your vehicle is equipped with driver's and front passenger's pre-tensioner seat belts (retractor pre-tensioner and EFD (Emergency Fastening Device)). The pre-tensioner seat belts may be activated, when a frontal collision is severe enough, together with the air bags.

When the vehicle stops suddenly, or if the occupant tries to lean forward too quickly, the seat belt retractor may lock into position. In certain frontal collisions, the pre-tensioner will activate and pull the seat belt into tighter contact against the occupant's body.

1. Retractor Pretensioner
   The purpose of the retractor pretensioner is to make sure that the shoulder belts fit in tightly against the occupant's upper body in certain frontal collisions.
2. EFD (Emergency Fastening Device) (for front seat belt)

The purpose of the EFD is to make sure that the pelvis belts fit in tightly against the occupant's lower body in certain frontal collisions.

If the system detects excessive tension on the driver or passenger's seat belt when the pre-tensioner system activates, the load limiter inside the retractor pre-tensioner will release some of the pressure on the affected seat belt.

NOTICE

When the pre-tensioner seat belts are activated, a loud noise may be heard with fine dust, which may appear to be smoke, may be visible in the passenger compartment. These are normal operating conditions and are not hazardous.

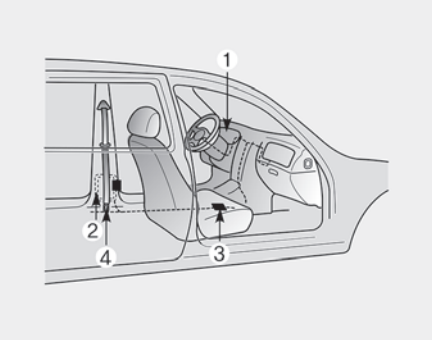

0RP036066L

The seat belt pre-tensioner system consists mainly of the following components. Their locations are shown in the illustration:

1. SRS air bag warning light
2. Front retractor pre-tensioner assembly
3. SRS control module
4. Emergency fastening device (EFD) (for front seat belt)

WARNING

Skin Irritation

Wash all exposed skin areas thoroughly after an accident in which the pre-tensioner seat belts were activated. The fine dust from the pre-tensioner activation may cause skin irritation and should not be breathed for prolonged periods.

NOTICE

- Both the driver's and front passenger's seat belt pre-tensioner system may be activated not only in certain frontal collisions, but also in certain side collisions or rollovers, if the vehicle is equipped with a side or curtain air bag.
- Because the sensor that activates the SRS air bag is connected with the pre-tensioner seat belt, the SRS air bag warning light on the instrument panel will illuminate for approximately 6 seconds after the Engine Start/Stop button has been turned to the ON position, and then it should turn off.

If the pre-tensioner seat belt system is not working properly, this warning light will illuminate even if there is not a malfunction with the SRS air bag. If the SRS air bag warning light does not illuminate when the Engine Start/Stop button is turned ON, or if it remains illuminated after illuminating for approximately 6 seconds, or if it illuminates while the vehicle is being driven, have an authorized Kia dealer inspect the pre-tensioner seat belt and SRS air bag system as soon as possible.

NOTICE

Do not attempt to service or repair the pre-tensioner seat belt system in any manner. Do not attempt to inspect or replace the pre-tensioner seat belts yourself. This must be done by an authorized Kia dealer.

WARNING

Hot pretensioner

Do not touch the pre-tensioner seat belt assemblies for several minutes after they have been activated. When the pre-tensioner seat belt mechanism activates during a collision the pre-tensioner becomes hot and can burn you.

Pre-tensioners are designed to operate only one time. After activation, pre-tensioner seat belts must be replaced. If the pre-tensioner must be replaced, contact an authorized Kia dealer.

Seat belt precautions

Infant or small child

All 50 states have child restraint laws. You should be aware of the specific requirements in your state. Child and/or infant seats must be properly placed and installed in the rear seat. For more information about the use of these restraints, refer to "Child Restraint System (CRS)" on page 3-33.

NOTICE

Small children are best protected from injury in an accident when properly restrained in the rear seat by a child restraint system that meets the requirements of the Federal Motor Vehicle Safety Standards. Before buying any child restraint system, make sure that it has a label certifying that it meets Federal Motor Vehicle Safety Standard 213. The restraint must be appropriate for your child's height and weight. Check the label on the child restraint for this information. Refer to "Child Restraint System (CRS)" on page 3-33.

Larger children

Children who are too large for child restraint systems should always occupy the rear seat and use the available lap/shoulder belts. The lap portion should be fastened and snugged on the hips as low as possible. Check periodically to insure that the belt fits. A child's squirming could put the belt out of position. Children are given the most safety in the event of an accident when they are restrained by a proper restraint system in the rear seat. If a larger child (over age 13) must be seated in the front seat, the child should be securely restrained by the available lap/shoulder belt and the seat should be placed in the rearmost position. Children age 13 and under should be restrained securely in the rear seat. NEVER place a child age 13 and under in the front seat. NEVER place a rear facing child seat in the front seat of a vehicle.

If the shoulder belt portion slightly touches the child's neck or face, try placing the child closer to the center of the vehicle. If the shoulder belt still touches their face or neck they need to be returned to a child restraint system.

⚠ WARNING

Small children

Do not allow small children to ride in the vehicle without an appropriate child restraint system. If the shoulder belt comes in contact with your child's neck or face, your child is too small to ride in the vehicle. In a crash the seat belt will inflict injury to your child's neck, throat and face.

Restraint of pregnant women

Pregnant women should wear lap/shoulder belt assemblies whenever possible according to specific recommendations by their doctors. The lap portion of the belt should be worn AS SECURELY AND LOW AS POSSIBLE.

⚠ WARNING

Pregnant women

Pregnant women must never place the lap portion of the seat belt above or on the abdomen where the fetus is located. The force of the seat belt during a collision will crush the fetus.

Injured person

A seat belt should be used when an injured person is being transported. When this is necessary, you should consult a physician for recommendations.

One person per belt

Two people (including children) should never attempt to use a single seat belt. This could increase the severity of injuries in case of an accident.

Do not lie down

To reduce the chance of injuries in the event of an accident and to achieve maximum effectiveness of the restraint system, all passengers should be sitting up and the front and rear seats should be in an upright position when the vehicle is moving. A seat belt cannot provide proper protection if the person is lying down in the rear seat or if the front and rear seats are in a reclined position.

Care of seat belts

Seat belt systems should never be disassembled or modified. In addition, care should be taken to assure that seat belts and belt hardware are not damaged by seat hinges, doors or other abuse.

⚠ WARNING

Pinched seat belt

Make sure that the webbing and/or buckle does not get caught or pinched in the rear seat when returning the rear seatback to its upright position. A caught or pinched webbing/ buckle may become damaged and could fail during a collision or sudden stop.

Periodic inspection

All seat belts should be inspected periodically for wear or damage of any kind. Any damaged parts should be replaced as soon as possible.

Keep belts clean and dry

Seat belts should be kept clean and dry. If belts become dirty, they can be cleaned by using a mild soap solution and warm water. Chemical substances should not be used on seat belts to prevent any damage. Heated up seatbelts may burn infants and children.

When to replace seat belts

The entire in-use seat belt assembly or assemblies should be replaced if the vehicle has been involved in an accident. This should be done even if no damage is visible. Additional questions concerning seat belt operation should be directed to an authorized Kia dealer.

Child Restraint System (CRS)

Children Always in the Rear

⚠ WARNING

Restraint Location

Never install a child or infant seat on the front passenger's seat. A child riding in the front passenger seat can be forcefully struck by an inflating airbag and seriously injured.

⚠ WARNING

Hot Child Restraint

A child restraint system can become very hot if it is left in a closed vehicle on a sunny day. Be sure to check the seat cover, buckles and latches before placing a child in the restraint system.

Children under age 13 must always ride in the rear seats and must always be properly restrained to minimize the risk of injury in an accident, sudden stop or sudden maneuver. According to accident statistics, children are safer when properly restrained in the rear seats than in the front seat. Even with air bags, children can be seriously injured or killed. Children too large for a child restraint must use the seat belts provided.

All 50 states have child restraint laws which require children to travel in approved child restraint devices. The laws governing the age or height/weight restrictions at which seat belts can be used instead of child restraints differs among states, so you should be aware of the specific requirements in your state, and where you are travelling.

Child restraint systems must be properly placed and installed in the rear seat. You must use a commercially available child restraint system that meets the requirements of the Federal Motor Vehicle Safety Standards (FMVSS).

Child restraint systems are generally designed to be secured in a vehicle seat by lap belt portion of a lap/shoulder belt, or by a LATCH system in the rear seats of the vehicle.

Child restraint system (CRS)

Infants and younger children must be restrained in an appropriate rear-facing or forward-facing CRS that has first been properly secured to the rear seat of the vehicle. Read and comply with the instructions for installation and use provided by the manufacturer of the child restraint.

⚠ WARNING

Child Restraint Installation

An improperly secured child restraint can increase the risk of serious injury or death in an accident. Always take the following precautions when using a child restraint system:

- Always follow the child restraint system manufacturer's instructions for installation and use.
- Always properly restrain your child in the child restraint.
- If the vehicle head restraint prevents proper installation of a child seat (as described in the child restraint system manual), the head restraint of the respective seating position shall be readjusted or entirely removed.
- Do not use an infant carrier or a child safety seat that "hooks" over a seatback, it may not provide adequate protection in an accident.

✻ NOTICE

If the vehicle has an accident, have a Kia dealer check the child restraint system, seat belts, tether anchors and lower anchors.

Selecting a Child Restraint System (CRS)

When selecting a CRS for your child, always:

- Make sure the CRS has a label certifying that it meets applicable Federal Motor Vehicle Safety Standards (FMVSS 213).
- Select a child restraint based on your child's height and weight. The required label or the instructions for use typically provide this information.
- Select a child restraint that fits the vehicle seating position where it will be used.
- Read and comply with the warnings and instructions for installation and use provided with the child restraint system.

⚠ WARNING

Holding Children

Never hold a child in your arms or lap when riding in a vehicle. The violent forces created during a crash will tear the child from your arms and throw the child against the car's interior. Always use a child restraint system which is appropriate for your child's height and weight.

⚠ WARNING

Unattended Children

Never leave children unattended in a vehicle. The car can heat up very quickly, resulting in injuries to the child in the vehicle.

⚠ WARNING

Seat Belt Use

Do not use one seat belt for two occupants at the same time. This will eliminate any safety benefit provided by the seat belt to the occupants.

Child restraint system types

There are three main types of child restraint systems: rear-facing seats, forward-facing seats, and booster seats. They are classified according to the child's age, height and weight.

Rear-facing child seats

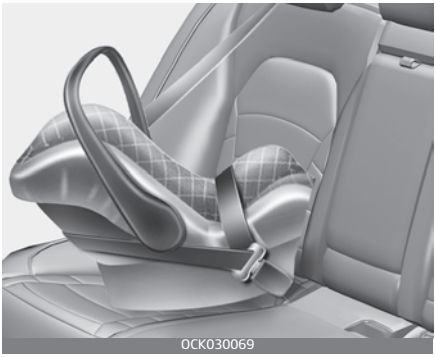

A rear-facing child seat provides restraint with the seating surface against the back of the child. The harness system holds the child in place, and in an accident, acts to keep the child positioned in the seat and reduces the stress to the neck and spinal cord.

All children under age one must always ride in a rear-facing infant child restraint.

Convertible and 3-in-1 child seats typically have higher height and weight limits for the rear-facing position, allowing you to keep your child rear-facing for a longer period of time.

Continue to use a rear-facing child seat for as long as your child will fit within the height and weight limits allowed by the child seat manufacturer. It's the best way to keep them safe. Once your child has outgrown the rear-facing child restraint, your child is ready for a

forward-facing child restraint with a harness.

Forward-facing child restraints

OCK030026

A forward-facing child seat provides restraint for the child's body with a harness. Keep children in a forward-facing child seat with a harness until they reach the top height or weight limit allowed by your child restraint's manufacturer.

Once your child outgrows the forward- facing child restraint, your child is ready for a booster seat.

Booster seats

A booster seat is a restraint designed to improve the fit of the vehicle's seat belt system. A booster seat positions the seat belt so that it fits properly over the lap of your child.

Keep your child in a booster seat until they are big enough to sit in the seat without a booster and still have the seat belt fit properly. For a seat belt to fit properly, the lap belt must lie snugly across the upper thighs, not the stomach. The shoulder belt should lie snug across the shoulder and chest and not across the neck or face. Children under age 13 must always ride in the rear seats and must always be properly restrained to minimize the risk of injury.

Installing a Child Restraint System (CRS)

After selecting a proper child seat for your child, check to make sure it fits properly in your vehicle. Follow the instructions provided by the manufacturer when installing the child seat. Note these general steps when installing the seat to your vehicle:

- **Properly secure the child restraint to the vehicle.** All child restraints must be secured to the vehicle with the lap part of a lap/shoulder belt or with the LATCH system.
- **Make sure the child restraint is firmly secured.** After installing a child restraint to the vehicle, push and pull the seat forward and from side-to-side to verify that it is securely attached to the seat. A child restraint secured with a seat belt should be installed as firmly as possible. However, some side-to side movement can be expected.

- **Secure the child in the child restraint.** Make sure the child is properly strapped in the child restraint according to the manufacturer instructions.

Lower Anchors and Tether for Children (LATCH) System

The LATCH system holds a child restraint during driving and in an accident. This system is designed to make installation of the child restraint easier and reduce the possibility of improperly installing your child restraint. The LATCH system uses anchors in the vehicle and attachments on the child restraint. The LATCH system eliminates the need to use seat belts to secure the child restraint to the rear seats.

Lower anchors are metal bars built into the vehicle. There are two lower anchors for each LATCH seating position that will accommodate a child restraint with lower attachments.

To use the LATCH system in your vehicle, you must have a child restraint with LATCH attachments.

The child seat manufacturer will provide you with instructions on how to use the child seat with its attachments for the LATCH lower anchors.

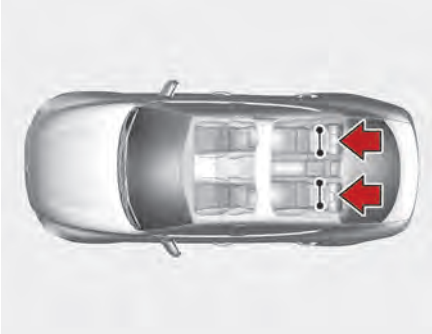

LATCH anchors have been provided in the left and right outboard rear seating positions. Their locations are shown in the illustration. There are no LATCH anchors provided for the center rear seating position.

⚠ WARNING

LATCH Lower Anchors

Never attempt to attach a LATCH equipped seat in the center seating position. LATCH lower anchors are only to be used in the left and right rear outboard seating positions.You may damage the anchors or the anchors may fail and break in a collision.

The lower anchor position indicator symbols are located on the left and right rear seat backs to identify the position of the lower anchors in your vehicle (see arrows in illustration).

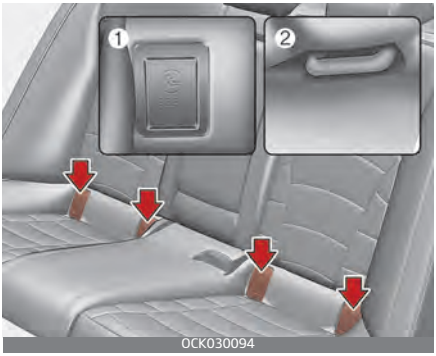

The LATCH anchors are located between the seatback and the seat cushion of the rear seat left and right outboard seating positions.

To use the lower anchor, push the upper portion of the lower anchor cover.

* (1) : Lower Anchor position symbol

(2) : Lower Anchor

Securing a child restraint with the LATCH anchors system

To install a LATCH-compatible child restraint in either of the rear outboard seating positions:

1. Move the seat belt buckle away from the lower anchors.
2. Move any other objects away from the anchors that could prevent a secure connection between the child restraint and the lower anchors.
3. Place the child restraint on the vehicle seat, then attach the seat to the lower anchors according to the instructions provided by the child restraint manufacturer.
4. Follow the child restraint instructions for properly adjusting and tightening the lower attachments on the child restraint to the lower anchors.

⚠ WARNING

Take the following precautions when using the LATCH system:

- Read and follow all installation instructions provided with your child restraint system.
- To prevent the child from reaching and taking hold of the unused seat belts, buckle all unused rear seat belts before the child is placed into the vehicle. Lock each unused seat belt following the instructions in the "Automatic locking mode" subsection, and place the webbing behind the child seat or against an unused seat back. Children can be strangled if a shoulder belt becomes wrapped around their neck and the seat belt tightens.
- NEVER attach more than one child restraint to a single anchor. This could cause the anchor or attachment to come loose or break.
- Always have the LATCH system inspected by your authorized Kia dealer after an accident. An accident can damage the LATCH sys-

tem and may not properly secure the child restraint.

NOTICE

The recommended maximum weight for the LATCH system is 65 lbs. (30 kg). When selecting a proper child restraint, consider that the maximum total weight of the child plus the child restraint should be less than 65 lbs (30 kg).

As a guide, the MAX child restraint weight should be determined by the following calculation:

Child Restraint Weight = 65 – (child's total weight in lbs.)

Securing a child restraint seat with "Tether Anchor" system

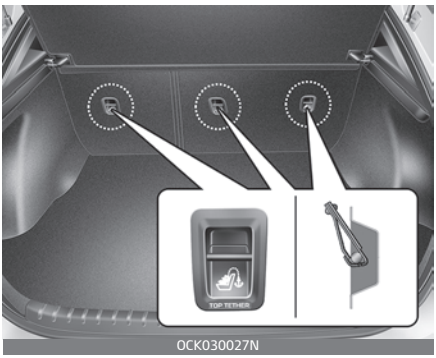

OCK030027N

First secure the child restraint with the LATCH lower anchors or the seat belt. If the child restraint manufacturer recommends that the top tether strap be attached, attach and tighten the top tether strap to the top tether strap anchor.

Child restraint hook holders are located on the back of the rear seatbacks.

WARNING

Take the following precautions when installing the tether strap:

- Read and follow all installation instructions provided with your child restraint system.
- NEVER attach more than one child restraint to a single tether anchor. This could cause the anchor or attachment to come loose or break.
- Do not attach the tether strap to anything other than the correct tether anchor. It may not work properly if attached to something else.
- Do not use the tether anchors for adult seat belts or harnesses, or for attaching other items or equipment to the vehicle.
- Always fasten the seat belts behind the child restraint seat when they are not used to secure the child seat. Failure to do so may result in child strangulation.

To install the tether anchor:

1. Route the child restraint tether strap over the child restraint seatback. Route the tether strap under the head restraint and between the head restraint posts, or route the tether strap over the top of the vehicle seatback. Make sure the strap is not twisted.
2. Connect the tether strap hook to the tether anchor, then tighten the tether strap according to the child seat manufacturer's instructions to firmly secure the child restraint to the seat.
3. Check that the child restraint is securely attached to the seat by pushing and pulling the seat forward and from side-to-side.

Securing a child restraint with a lap/shoulder belt

When not using the LATCH system, all child restraints must be secured to a vehicle rear seat with the lap part of a lap/shoulder belt.

Installing a Child Restraint System with a lap/shoulder belt

Since all passenger seat belts move freely under normal conditions and only lock under extreme or emergency conditions (emergency locking mode), you must manually pull the seat belt all the way out to shift the retractor to the "Automatic Locking" mode to secure a child restraint.

The "Automatic Locking" mode will help prevent the normal movement of the child in the vehicle from causing the seat belt to loosen and compromise the child restraint system.To secure a child restraint system, use the following procedure.

To install a child restraint system on the rear seats, do the following :

1. Place the child restraint system on a rear seat and route the lap/shoulder belt around or through the child restraint, following the

restraint manufacturer's instructions.
Be sure the seat belt webbing is not twisted.

2. Fasten the lap/shoulder belt latch into the buckle. Listen for the distinct "click" sound.
   Position the release button so that it is easy to access in case of an emergency.

ODEEV058042NR

3. Pull the shoulder portion of the seat belt all the way out. When the shoulder portion of the seat belt is fully extended, it will shift the retractor to the "Automatic Locking" (child restraint) mode.

ODEEV058043NR

4. Slowly allow the shoulder portion of the seat belt to retract and listen for an audible "clicking" or "ratcheting" sound. This indicates that the retractor is in the "Automatic Locking" mode. If no distinct sound is heard, repeat steps 3 and 4.

ODEEV058044NR

5. Remove as much slack from the belt as possible by pushing down on the child restraint system while feeding the shoulder belt back into the retractor.
6. Push and pull on the child restraint system to confirm that the seat belt is holding it firmly in place. If it is not, release the seat belt and repeat steps 2 through 6.
7. Double check that the retractor is in the "Automatic Locking" mode by attempting to pull more of the seat belt out of the retractor. If you cannot, the retractor is in the "Automatic Locking" mode.

If your CRS manufacturer instructs or recommends you to use a tether anchor with the lap/shoulder belt, refer to the previous pages for more information.

NOTICE

When the seat belt is allowed to retract to its fully stowed position, the retractor will automatically switch from the "Automatic Locking" mode to the emergency lock mode for normal adult usage.

WARNING

Auto lock mode

Set the retractor to Automatic Lock mode when installing any child restraint system. If the retractor is not in the Automatic Locking mode, the child restraint can move when your vehicle turns or stops suddenly.

To remove the child restraint, press the release button on the buckle and then pull the lap/shoulder belt out of the restraint and allow the seat belt to retract fully.

Air bag – advanced supplemental restraint system

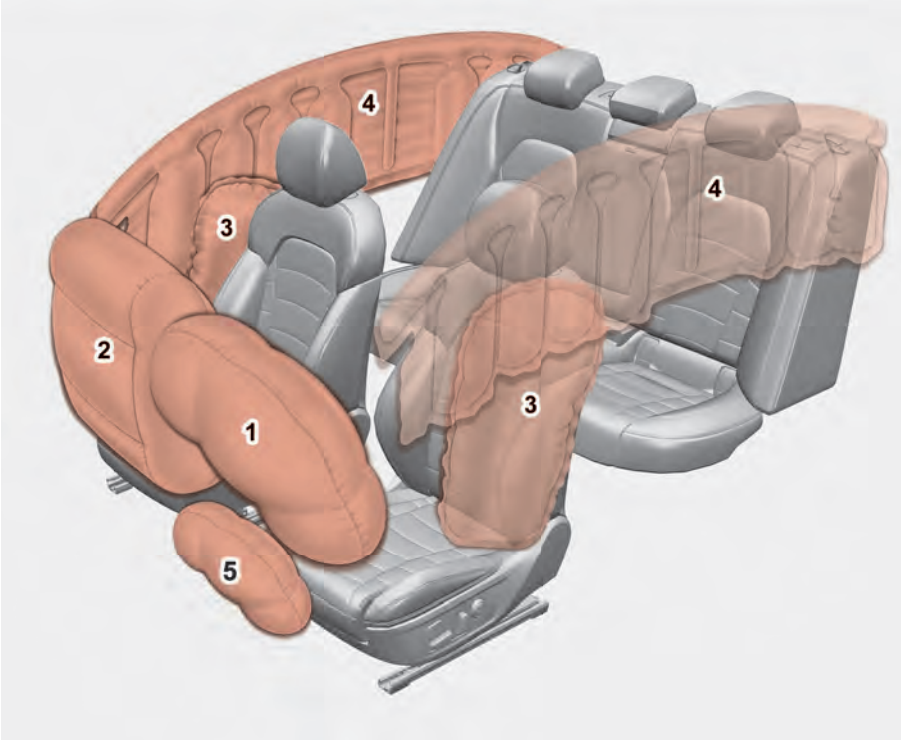

OCK030030

* The actual air bags in the vehicle may differ from the illustration.

1. Driver's front air bag
2. Passenger's front air bag
3. Side air bag
4. Curtain air bag
5. Driver's knee air bag

Even in vehicles with air bags, you and your passengers must always wear the safety belts provided in order to minimize the risk and severity of injury in the event of a collision or rollover.

How does the air bag system operate?

- Air bags are activated (able to inflate if necessary) only when the ENGINE START/STOP button is turned to the ON or engine is running.
- The appropriate air bags inflate instantly in the event of a serious frontal collision or side collision in order to help protect the occupants from serious physical injury.
- There is no single speed at which the air bags will inflate.
  Generally, air bags are designed to inflate based upon the severity of a collision and its direction. These two factors determine whether the sensors produce an electronic deployment/ inflation signal.
- Air bag deployment depends on a number of factors including vehicle speed and angles of impact. The determining factors are not limited to those mentioned above.
- The front air bags will completely inflate and deflate in an instant. see the air bags inflate during an accident.
  It is much more likely that you will simply see the deflated air bags hanging out of their storage compartments after the collision.
- In addition to inflating in serious side collisions, side and/or curtain air bags will inflate if the sensing system detects a rollover.
- When a rollover is detected, side and/or curtain air bags will remain inflated longer to help provide protection from ejection, especially when used in conjunction with the seat belts.
- In order to help provide protection, the air bags must inflate rapidly. The speed of the air bag inflation is a consequence of extremely short time in which to inflate the air bag between the occupant and the vehicle structures before the occupant impacts those structures. This speed of inflation reduces the risk of serious or life-threatening injuries and is thus a necessary part of the air bag design.
  However, air bag inflation can also cause injuries which can include facial abrasions, bruises and broken bones because the inflation speed also causes the air bags to expand with a great deal of force.
- **There are even circumstances under which contact with the steering wheel or passenger air bag can cause fatal injuries, especially if the occupant is positioned excessively close to the steering wheel or passenger air bag.**

⚠ WARNING

Airbag inflation

Sit as far back as possible from the steering wheel while still maintaining comfortable control of your vehicle. A distance of at least 10" from your chest to the steering wheel is recommended. Failure to do so can result in airbag inflation injuries to the driver.

Noise and smoke

When inflated, the air bags make a loud noise and leave smoke and powder in the air inside the vehicle. This is normal and is a result of the ignition of the air bag inflator. After the air bag inflates, you may feel substantial discomfort in breathing due to the contact of your chest with both the seat belt and the air bag, as well as from breathing the smoke and powder. **Open your doors and/or windows as soon as possible after impact in order to reduce discomfort and prevent prolonged exposure to the smoke and powder.**

Though smoke and powder are non-toxic, it may cause irritation to the skin (eyes, nose and throat, etc). If this is the case, wash and rinse with cold water immediately and consult a doctor if the symptom persists.

⚠ WARNING

Hot components

Do not touch the air bag storage area's internal components immediately after airbag inflation. The air bag related parts in the steering wheel, instrument panel and the roof rails above the front and rear doors are very hot. Hot components can result in burn injuries.

⚠ WARNING

Do not install or place any accessories near air bag deployment areas, such as the instrument panel, windows, pillars, and roof rails.

Do not install a child restraint on the front passenger's seat.

ODEEV058046NR

Never place a rear-facing child restraint in the front passenger's seat. If the air bag deploys, it would impact the rear-facing child

restraint, causing serious or fatal injury.

In addition, do not place front-facing child restraints in the front passenger's seat. If the front passenger air bag inflates, it could cause serious or fatal injuries to the child.

⚠ WARNING

Air bag deployment

- When children are seated in the rear outboard seats of a vehicle equipped with side and/or curtain air bags, install the child restraint system as far away from the door side as possible. Inflation of the side and/or curtain air bags could impact the child.
- Do not install or place any accessories near air bag deployment areas, such as the instrument panel, windows, pillars, and roof rails.

Air bag warning light

The purpose of air bag warning light in your instrument panel is to alert you of a potential problem with your air bag system, which could include your side and/or curtain air bags used for rollover protection.

SRS components and functions

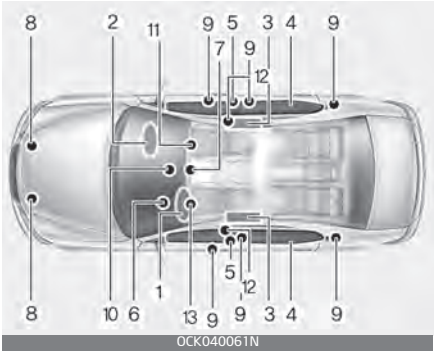

The SRS consists of the following components:

1. Driver's front air bag module
2. Passenger's front air bag module
3. Side air bag modules
4. Curtain air bag modules
5. Retractor pre-tensioner assemblies
6. Air bag warning light
7. SRS control module (SRSCM) / Rollover sensor
8. Front impact sensors
9. Side impact sensors
10. PASSENGER AIR BAG "OFF" indicator (Front passenger's seat only)
11. Occupant detection system (Front passenger's seat only)
12. Emergency fastening device (EFD) (for front seat belt)
13. Driver's knee air bag module

If the air bag warning light is illuminated for more than 6 seconds after the Engine Start/Stop button is turned on, or of it illuminates during vehicle operation, an SRS compo-

nent may not be functioning properly and you should have your vehicle checked by an authorized Kia dealer.

If any of the following conditions occur, this indicates a malfunction in the air bag system. Have an authorized Kia dealer inspect the air bag system as soon as possible.

- The light does not turn on briefly when you turn the Engine Start/Stop button to the ON position.
- The light stays on after illuminating for approximately 6 seconds.
- The light comes on while the vehicle is in motion.
- The light blinks when the Engine Start/Stop button to the ON position.

The front air bag modules are located both in the center of the steering wheel and in the front passenger's panel above the glove box. When the SRSCM detects a sufficiently severe impact to the front of the vehicle, it will automatically deploy the front air bags.

Driver's front air bag (1)

ODEEV058048NR

Upon deployment, tear seams molded directly into the pad covers will separate under pressure from the expansion of the air bags. Further opening of the covers then allows full inflation of the air bags.

Driver's front air bag (2)

ODEEV058049NR

A fully inflated air bag, in combination with a properly worn seat belt, slows the driver's or the passenger's forward motion, reducing the risk of head and chest injury.

Driver's front air bag (3)

ODEEV058050NR

After complete inflation, the air bag immediately starts deflating, enabling the driver to maintain forward visibility and the ability to steer or operate other controls.

Passenger's front air bag

ODEEV058051NR

⚠ WARNING

Air bag obstructions

Do not install or place any accessories on the steering wheel, instrument panel, or on the front passenger's panel above the glove box in a vehicle. Such objects may become dangerous projectiles if the air bag deploys.

⚠ WARNING

Flying objects

Do not place any objects (an umbrella, bag, etc.) between the front door and the front seat. Such objects may become dangerous projectiles if the side airbag inflates.

- If an air bag deploys, there may be a loud noise followed by a fine dust released in the vehicle. These conditions are normal and are not hazardous – the air bags are packed in this fine powder. The dust generated during air bag deployment may cause skin or eye irritation as well as aggravate asthma for some persons. Always wash all exposed skin areas thoroughly with cold water and a mild soap after an accident in which the air bags were deployed.
- The SRS can function only when the Engine Start/Stop button is in the ON position. If the SRS air bag warning light does not illuminate, or continuously remains on after illuminating for about 6 seconds when the ignition switch is turned to the ON position, or after the engine is started, comes on while driving, the SRS is not working properly. If this occurs, have your

vehicle immediately inspected by an authorized Kia dealer.

✻ NOTICE

Before you replace a fuse or disconnect a battery terminal, turn the Engine Start/Stop button to the OFF position.

Never remove or replace the air bag related fuse (s) when the Engine Start/Stop button to the ON position. Failure to heed this warning will cause the SRS air bag warning light to illuminate.

Occupant Detection System (ODS)

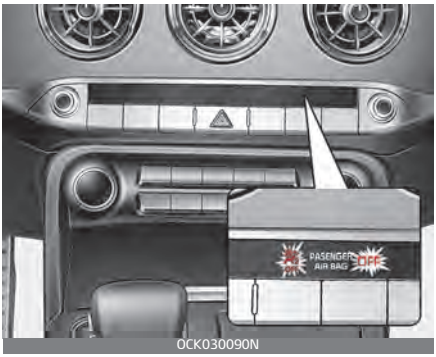

OCK030090N

Your vehicle is equipped with an occupant detection system in the front passenger's seat.

The occupant detection system is designed to detect the presence of a properly-seated front passenger and determine if the passenger's front air bag should be enabled (may inflate) or not. Only the front passenger's air bag is controlled by the Occupant Detection System.

Do not put anything in front of the passenger air bag "OFF" indicator.

Main components of the occupant detection system

- An detection device located within the front passenger seat cushion.
- An electronic system which determines whether the passenger air bag systems should be activated or deactivated.
- An indicator light located on the instrument panel which illuminates the words PASSENGER AIR BAG "OFF" indicates the front passenger air bag system is deactivated.
- The instrument panel air bag warning light is interconnected with the occupant detection system.

If the front passenger seat is occupied by a person that the system determines to be of appropriate size, and he/she sits properly (sitting upright with the seatback in an upright position, centered on the seat cushion with their seat belt on, legs comfortably extended and their feet on the floor), the PASSENGER AIR BAG "OFF" indicator will turn off and the front passenger's air bag will be able to inflate, if necessary, in frontal crashes.

You will find the PASSENGER AIR BAG "OFF" indicator on the center facia panel. This system detects the conditions 1 ~ 4 in the following table and activates or deactivates the front passenger air bag based on these conditions.

Always be sure that you and all vehicle occupants are seated and restrained properly (sitting upright with the seat in an upright position, centered on the seat cushion, with the person's legs comfortably extended, feet on the floor, and wearing the safety belt properly) for the most effective protection by the air bag and the safety belt.

- The ODS (Occupant Detection System) may not function properly if the passenger takes actions which can defeat the detection system. These include:
  1. Failing to sit in an upright position.
  2. Leaning against the door or center console.
  3. Sitting towards the sides or the front of the seat.
  4. Putting legs on the dashboard or resting them on other locations which reduce the passenger weight on the front seat.
  5. Improperly wearing the safety belt.
  6. Reclining the seat back.

Condition and operation in the front passenger occupant detection system

Condition detected by the occupant classification system	Indicator/Warning light		Devices
	"PASSENGER AIR BAG OFF" indicator light	SRS warninglight	Front passengerair bag
1. Adult*1	Off	Off	Activated
2. Child restraint system with child under 12 months old*2*3*4	On	Off	Deactivated
3. Unoccupied	On	Off	Deactivated
4. Malfunction in the system	Off	On	Activated

*1 The system judges a person of adult size as an adult. When a smaller adult sits in the front passenger seat, the system may recognize him/her as a child depending on his/her physique and posture.

*2 Do not allow children to ride in the front passenger seat. When a larger child who has outgrown a child restraint system sits in the front passenger seat, the system may recognize him/her as an adult depending upon his/her physique or sitting position.

*3 Never install a child restraint system on the front passenger seat.

*4 The PASSENGER AIR BAG "OFF" indicator may turn on or off when a child above 12 months to 12 years old (with or without child restraint system) sits in the front passenger seat. This is a normal condition.

⚠ CAUTION

- Do not install a child restraint seat in the passenger seat when the seat is heavily soaked with any type of liquid.
- Do not alter or remodel the ODS (Occupant Detection System).This may damage the system and prevent its proper function in a collision.

✻ NOTICE

- Do not use car seat cushions that cover up the surface of the seat and aftermarket manufactured passenger seat heaters.
- After conducting car interior cleaning using steam or detergent, the seat should be dried properly. Afterward, check for normal operation of the PASSEN-

GER AIR BAG "OFF" and air bag warning lights.
- Any service related to the passenger seat and the ODS must be done at Kia service center.
- After the passenger seat has been removed or installed for repair purposes, check for normal operation of the PASSENGER AIR BAG "OFF" and air bag warning lights with a person seated or not seated in the passenger seat.

WARNING

ODS System

Riding in an improper position adversely affects the Occupant Detection System and may result in the deactivation of the front passenger airbag. It is important for the driver to instruct the passenger as to the proper seating instructions as contained in this manual.

NOTICE

When the PASSENGER AIR BAG "OFF" symbol is illuminated, the passenger air bag system will not operate. The passenger air bag system will operate when necessary if the symbol is not illuminated.

NOTICE

Do not modify or replace the front passenger seat. Don't place anything on or attach anything such as a blanket, front seat cover or after market seat heater to the front passenger seat. This can adversely affect the occupant detection system.

WARNING

ODS System

Riding in an improper position adversely affects the Occupant Detection System and may result in the deactivation of the front passenger airbag. It is important for the driver to instruct the passenger as to the proper seating instructions as contained in this manual.

- Do not place a heavy load in the front passenger seatback pocket or on the front passenger seat.

ODEEV058055NR

- Do not place feet on the front passenger seatback.

ODEEV058056NR

- Never sit with hips shifted towards the front of the seat.

ODEEV058057NR

- Never excessively recline the front passenger seatback.

ODEEV058002NR

- Never place feet on the dashboard.

ODEEV058059NR

- Do not use car seat accessories such as thick blankets and cushions which cover up the car seat surface.
- Do not sit on the passenger seat wearing heavily padded clothes, such as ski wear and hip protector.

ODEEV058061NR

- Never lean on the door or center console.
- Do not sit with your weight excessively skewing to the left or right on the front passenger seat.

ODEEV058060NR

- Do not place electronic devices such as laptops, DVD player, or conductive materials such as water bottles on the passenger seat.
- Do not use electronic devices such as laptops and satellite radios which use inverter chargers.

ODEEV058062NR

- Wet Passenger Seat
  Do not spill liquid in the passenger seat. Spilled liquid on the passenger seat may cause the air bag warning light to illuminate or malfunction. If any liquid is spilled, make sure the seat has been completely dried before driving the vehicle.

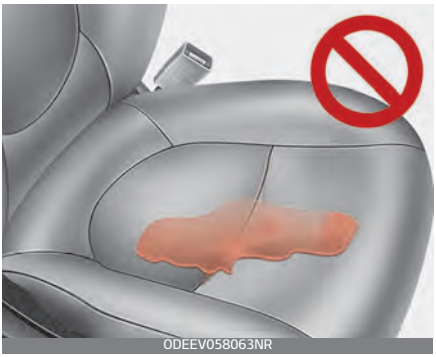
ODEEV058063NR

Proper position

ODEEV058064NR

When an adult is seated in the front passenger seat, if the PASSENGER AIR BAG “OFF” indicator is on, turn the Engine Start/Stop button to the OFF position and ask the passenger to sit properly (sitting upright with the seat back in an upright position, centered on the seat cushion with their seat belt on, legs comfortably extended and their feet on the floor). Restart the engine and have the person remain in that position.

This will allow the system to detect the person and to enable the passenger air bag.

If the PASSENGER AIR BAG "OFF" indicator is still on, ask the passenger to move to the rear seat.

⚠ WARNING

PASSENGER AIR BAG "OFF" light

Do not allow an adult passenger to ride in the front seat when the PASSENGER AIR BAG "OFF" indicator is illuminated, because the air bag will not deploy in the event of a crash. The driver must instruct the passenger to reposition himself in the seat. Failure to properly position yourself may lead to air bag deactivation resulting in air bag non-deployment in a collision. If the PASSENGER AIR BAG "OFF" indicator remains illuminated after the passenger repositions themselves properly and the car is restarted, it is recommended that passenger move to the rear seat because the passenger's front air bag will not deploy.

✻ NOTICE

The PASSENGER AIR BAG "OFF" indicator illuminates for about 4 seconds after the Engine Start/Stop button is turned to the ON position or after the engine is started. If the front passenger seat is occupied, the occupant detection sensor will then classify the front passenger after several more seconds.

- Even though your vehicle is equipped with the occupant detection system, never install a child restraint system in the front passenger's seat. A deploying air bag can forcefully strike a child resulting in serious injuries or death. Any child age 13 and under should ride in the rear seat. Children too large for child restraints should use the available lap/shoulder belts. No matter what type of crash, children of all ages are safer when restrained in the rear seat.
- If the PASSENGER AIR BAG "OFF" indicator is illuminated when the front passenger's seat is occupied by an adult and he/she sits properly (sitting upright with the seatback in an upright position, centered on the seat cushion with their seat belt on, legs comfortably extended and their feet on the floor), have that person sit in the rear seat.

If the occupant detection system is not working properly, the SRS air bag warning light on the instrument panel will illuminate because the passenger's front air bag is connected with the occupant detection

system. If there is a malfunction of the occupant detection system, the PASSENGER AIR BAG “OFF” indicator will not illuminate and the passenger's front air bag will inflate in frontal impact crashes even if there is no occupant in the front passenger's seat.

Driver's and passenger's front air bag

Driver’s front air bag

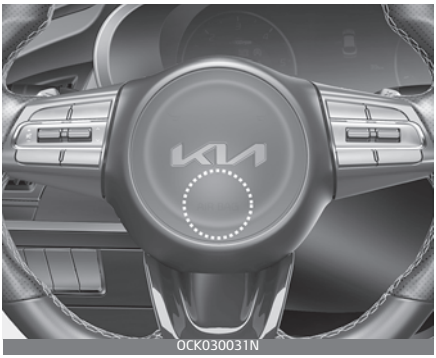

Driver’s knee air bag

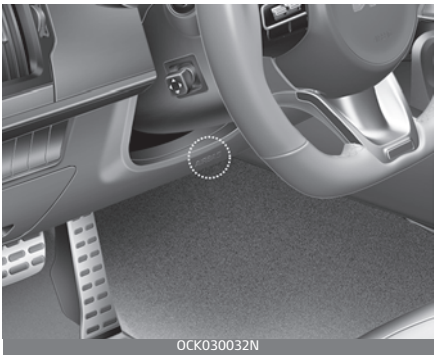

Passenger’s front air bag

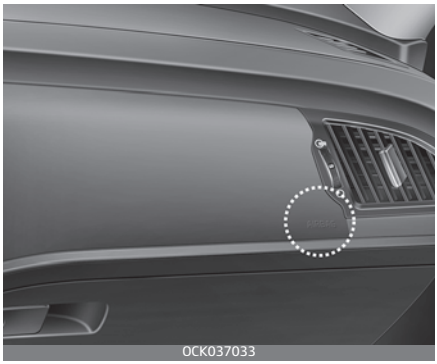

Your vehicle is equipped with an Advanced Supplemental Restraint (Air Bag) System and lap/shoulder belts at both the driver and passenger seating position.

The indication of the system's presence are the letters “AIR BAG” located on the air bag pad cover on the steering wheel and the passenger's side front panel pad above the glove box.

The SRS consists of air bags installed under the pad covers in the center of the steering wheel and the passenger's side front panel above the glove box.

The purpose of the SRS is to provide the vehicle's driver and/or the front passenger with additional protection than that offered by the seat belt system alone in case of a frontal impact of sufficient severity. The SRS uses sensors to gather information about the driver's and front

passenger's seat belt usage and impact severity.

The seat belt buckle sensors determine if the driver and front passenger's seat belts are fastened.

These sensors provide the ability to control the SRS deployment based on whether or not the seat belts are fastened, and how severe the impact is.

The advanced SRS offers the ability to control the air bag inflation with two levels. A first stage level is provided for moderate-severity impacts. A second stage level is provided for more severe impacts.

The passenger's front air bag is designed to help reduce the injury of children sitting close to the instrument panel in low speed collisions. However, children are safer if they are restrained in the rear seat.

According to the impact severity and seat belt usage, the SRSCM (SRS Control Module) controls the air bag inflation. Failure to properly wear seat belts can increase the risk or severity of injury in an accident.

✻ NOTICE

The driver's hands should be placed on the steering wheel at the 9:00 and 3:00 positions. The passenger's arm and hands should be placed on their laps.

Additionally, your vehicle is equipped with an occupant detection system in the front passenger's seat. The occupant detection system detects the presence of a passenger in the front passenger's seat and will turn off the front passenger's air bag under certain conditions. For more detail, see "Occupant detection system" in this chapter.

Modification to the seat structure can cause the air bag to deploy at a different level than should be provided.

Manufacturers are required by government regulations to provide a contact point concerning modifications to the vehicle for persons with disabilities, which modifications may affect the vehicle's advanced air bag system. That contact is Kia's toll-free Customer Assistance center at 1-800-333-4Kia. However, Kia does not endorse nor will it support any changes to any part or structure of the vehicle that could affect the advanced air bag system, including the occupant detection system.

⚠ WARNING

Replacement/ modifications

The front passenger seat, dashboard or door should not be replaced except by an authorized Kia dealer using original Kia parts designed for this vehicle and model. Any other such replacement or modification could adversely affect the operation of the occupant detection system and your advanced air bags.

Advanced air bags are combined with pre-tensioner seat belts to help provide enhanced occupant protection in frontal crashes. Front air bags are not intended to deploy in collisions in which sufficient protection can be provided by the pre-tensioner seat belt.

✻ NOTICE

Air bags can only be used once – have an authorized Kia dealer replace the air bag immediately after deployment.

Front air bags are not intended to deploy in side-impact, rear-impact or rollover crashes. However, when frontal deployment threshold is satisfied at side-impact, front air bags may deploy. In addition, front air bags will not deploy in frontal crashes below the deployment threshold.

⚠ WARNING

SRS Wiring

Do not tamper with or disconnect SRS wiring or other components of the SRS system. Doing so could result in injury, due to accidental deployment of the air bags or by rendering the SRS inoperative.

⚠ WARNING

No attaching objects

- No objects (such as crash pad cover, cellular phone holder, cup holder, perfume or stickers) should be placed over or near the air bag modules on the steering wheel, instrument panel, windshield glass, and the front passenger's panel above the glove box. Such objects could cause harm if the vehicle is in a crash severe enough to cause the air bags to deploy.
  Do not place any objects over the air bag or between the air bag and yourself.
- Never place or insert any object into any small opening near side airbag labels attached to the vehicle seats.
  When the air bag deploys, the object may affect the deployment and result in unexpected accident or bodily harm.

Side air bag

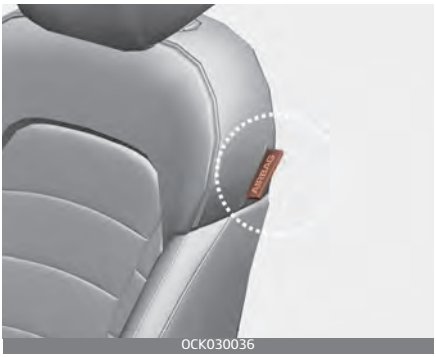

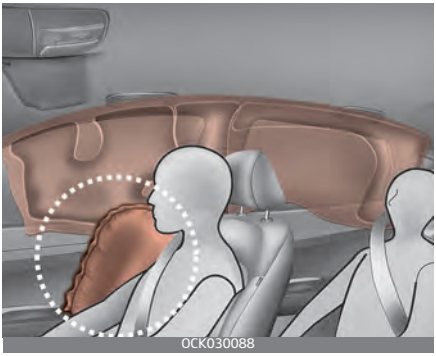

* The actual air bags in the vehicle may differ from the illustration.

Your vehicle is equipped with a side air bag in each front seat. The purpose of the air bag is to provide the vehicle's driver and/or the front passenger with additional protection than that offered by the seat belt alone.

- The side air bags are designed to deploy during certain side-impact collisions, depending on the crash severity, angle, speed and point of impact. However, when side deployment threshold is satisfied at frontimpact, side air bags may deploy.
- The side air bags may deploy on the side of the impact or on both sides.
- The side and/or curtain air bags on both sides of the vehicle will deploy if a rollover or possible rollover is detected.
- The side air bags are not designed to deploy in all side impact or rollover situations.

⚠ WARNING

Unexpected deployment

Avoid impact to the side impact airbag sensor when the Engine Start/Stop button is ON to prevent unexpected deployment of the side air bag.

- The side air bag is supplemental to the driver's and the passenger's seat belt systems and is not a substitute for them. Therefore your seat belts must be worn at all times while the vehicle is in operation.
- For best protection from the side air bag system and to avoid being injured by the deploying side air bag, both front seat occupants should sit in an upright position with the seat belt properly fastened. The driver's hands should be placed on the steering wheel at the 9:00 and 3:00 positions. The

passenger's arms and hands should be placed on their laps.

⚠ WARNING

Deployment

Do not install any accessories including seat covers, on the side or near the side air bag as this may affect the deployment of the side air bags.

- If seat or seat cover is damaged, have the vehicle checked and repaired by an authorized Kia dealer. Inform the dealer that your vehicle is equipped with side air bags and an occupant detection system.

⚠ WARNING

Flying objects

Do not place any objects (an umbrella, bag, etc.) between the front door and the front seat. Such objects may become dangerous projectiles if the side airbag inflates.

⚠ WARNING

No attaching objects

- Do not place any objects over the air bag or between the air bag and yourself. Also, do not attach any objects around the area the air bag inflates such as the door, side door glass, front and rear pillar.
- Do not put any objects between the side airbag label and seat cushion. It could cause harm if the vehicle is in a crash severe enough to cause the air bags to deploy.
- Never place or insert any object into any small opening near side airbag labels attached to the vehicle seats. When the air bag deploys, the object may affect the deployment and result in unexpected accident or bodily harm.
- Do not install any accessories on the side or near the side air bags.

Curtain air bag

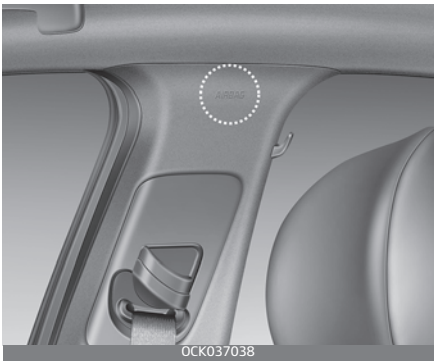

OCK037038

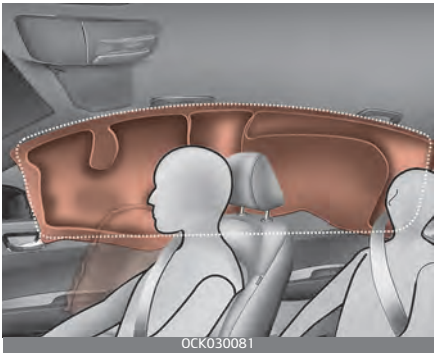

OCK030081

* The actual air bags in the vehicle may differ from the illustration.

Curtain air bags are located along both sides of the roof rails above the front and rear doors.

They are designed to help protect occupants in certain side impacts and to help prevent them from ejecting out of the vehicle as a result of a rollover, especially when the seatbelts are also in use.

- The curtain air bags are designed to deploy during certain side impact collisions, depending on the crash severity, angle, speed and point of impact. However, when side deployment threshold is satisfied at frontimpact, side air bags may deploy.
- The curtain air bags may deploy on the side of the impact or on both sides.
- Also, the curtain air bags on both sides of the vehicle will deploy in certain rollover situations.
- The curtain air bags are not designed to deploy in all side impact or rollover situations.

Do not allow the passengers to lean their heads or bodies against the doors, put their arms on the doors, stretch their arms out of the window or place objects between the doors and passengers when they are seated on seats equipped with side impact and/or curtain air bags.

NOTICE

Never try to open or repair any components of the side and curtain air bag system. This should only be done by an authorized Kia dealer.

⚠ WARNING

No attaching objects

- Do not place any objects over the air bag. Also, do not attach any objects around the area the air bag inflates such as the door, side door glass, front and rear pillar, roof side rail.
- Do not hang hard or breakable objects on the coat hook.

Why didn't my air bag deploy in a collision? (Inflation and non-inflation conditions of the air bag)

There are many types of accidents in which the air bag would not be expected to provide additional protection.

These include rear impacts, second or third collisions in multiple impact accidents, as well as low speed impacts.

Air bag collision sensors

OCK030039N

(1)

OCK030040

(2)

OCK030041N

(3)

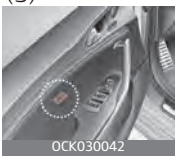

OCK030042

(4)

OCK030043

(5)

OCK030044

1. SRS control module/ Rollover sensor
2. Front impact sensor
3. Side impact sensor
4. Side impact sensor
5. Side impact sensor

⚠ WARNING

Air bag sensors

- Do not hit or allow any objects to impact the locations where air bags or sensors are installed. This may cause unexpected air bag deployment, which could result in serious personal injury or death.
- If the installation location or angle of the sensors is altered in any way, the air bags may deploy when they should not or they may not deploy when they should.
  Therefore, do not try to perform maintenance on or around the air bag sensors. Have the vehicle checked and repaired by an authorized Kia dealer.

Problems may arise if the sensor installation angles are changed due to the deformation of the front bumper, front end module, body or front doors where side collision sensors are installed. Have the vehicle checked and repaired by an authorized Kia dealer.

Installing bumper guards (or side step or running board) or replacing a bumper (or front door module) with non-genuine parts may adversely affect your vehicle's collision and air bag deployment performance.

Air bag inflation conditions

Front air bags

Front air bags are designed to inflate in a frontal collision depending on the intensity, speed or angles of impact of the front collision.

Side and/or curtain air bags

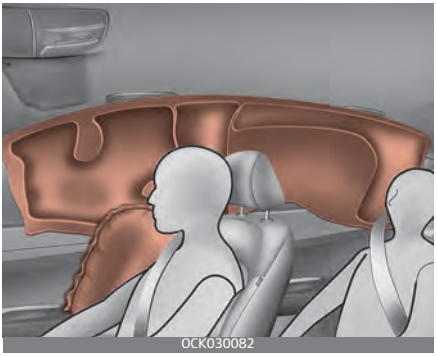

* The actual air bags in the vehicle may differ from the illustration.

Side and/or curtain air bags are designed to inflate when an impact is detected by side collision sensors depending on the strength, speed or angles of impact resulting from a side impact collision.

Also, the side and curtain air bags are designed to inflate when a rollover is detected by a rollover sensor.

Although the front air bags (driver's and front passenger's air bags) are designed to inflate in frontal collisions, they also may inflate in other types of collisions if the front impact sensors detect a sufficient frontal force in another type of impact. Side and curtain air bags are designed to inflate in certain side impact collisions. They may inflate in other types of collisions where a side force is detected by the sensors. Side air bag and/or curtain air bags may also inflate where rollover sensors indicate the possibility of a rollover occurring (even if none actually occurs) or in other situations, including when the vehicle is tilted while being towed.

Even where side and/or curtain air bags would not provide impact protection in a rollover, however, they will deploy to prevent ejection of occupants, especially those who are restrained with seat belts.

If the vehicle chassis is impacted by bumps or objects on unpaved roads, the air bags may deploy. Drive carefully on unpaved roads or on surfaces not designed for vehicle traffic to prevent unintended air bag deployment.

Air bag non-inflation conditions

- In certain low-speed collisions the air bags may not deploy. The air bags are designed not to deploy in such cases because they may not provide benefits beyond the protection of the seat belts in such collisions.

- Air bags are not designed to inflate in rear collisions, because occupants are moved backward by the force of the impact. In this case, inflated air bags would not be able to provide any additional benefit.

OCK030048

- Front air bags may not inflate in side impact collisions, because occupants move to the direction of the collision, and thus in side impacts, frontal air bag deployment would not provide additional occupant protection.

OCK030049N

- In an angled collision, the force of impact may direct the occupants in a direction where the air bags would not be able to provide any additional benefit, and thus the sensors may not deploy any air bags.

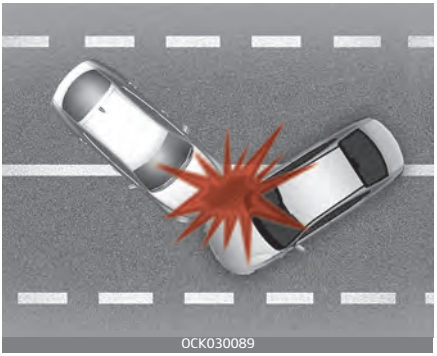
OCK030089

- Just before impact, drivers often brake heavily. Such heavy braking lowers the front portion of the vehicle causing it to “ride” under a vehicle with a higher ground clearance. Air bags may not inflate in this “under-ride” situation because deceleration forces that are detected by sensors may be significantly reduced by such “under-ride” collisions.

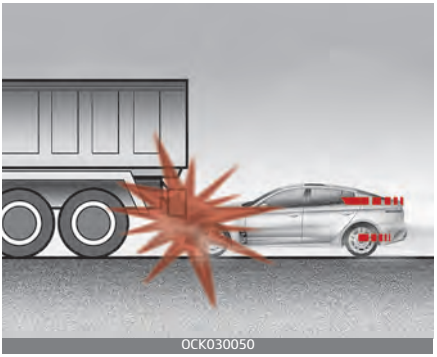
OCK030050

- Front air bags may not inflate in all rollover accidents where the SRSCM indicates that the front air bag deployment would not provide additional occupant protection.

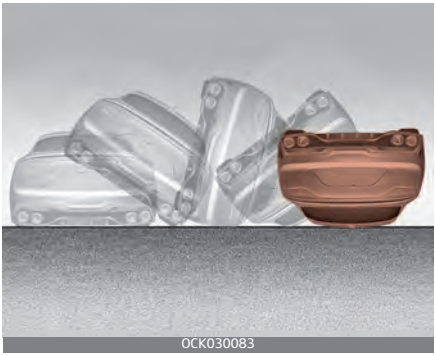

- Air bags may not inflate if the vehicle collides with objects such as utility poles or trees, where the point of impact is concentrated to one area and the full force of the impact is not delivered to the sensors.

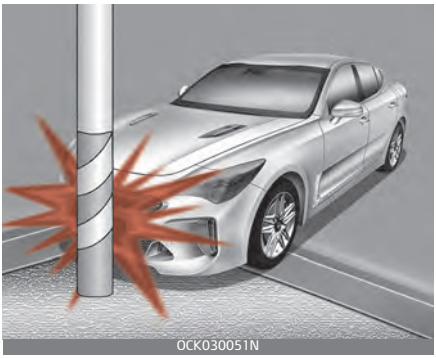

SRS Care

The SRS is virtually maintenance-free and so there are no parts you can safely service by yourself. If the SRS air bag warning light does not illuminate, or continuously remains on, have your vehicle immediately inspected by an authorized Kia dealer.

Any work on the SRS system, such as removing, installing, repairing, or any work on the steering wheel, the front passenger's panel, front seats and roof rails must be performed by an authorized Kia dealer. Improper handling of the SRS system may result in serious personal injury.

For cleaning the air bag pad covers, use only a soft, dry cloth or one which has been moistened with plain water. Solvents or cleaners could adversely affect the air bag covers and proper deployment of the system.

If components of the air bag system must be discarded, or if the vehicle must be scrapped, certain safety precautions must be observed. An authorized Kia dealer knows these precautions and can give you the necessary information. Failure to follow these precautions and procedures could increase the risk of personal injury.

⚠ WARNING

Tampering with SRS

Do not tamper with or disconnect SRS wiring, or other components of the SRS system.

Doing so could result in the accidental inflation of the air bags or render the SRS inoperative.

⚠ WARNING

Towing Vehicle

Always have the Engine Start/Stop button in the OFF position when your vehicle is being towed. The side air bags may inflate if the vehicle is tilted such as when being towed because of the rollover sensors in the vehicle.

Adding equipment to or modifying your air bag-equipped vehicle

If you modify your vehicle by changing your vehicle's frame, bumper system, front end or side sheet metal or ride height, this may affect the operation of your vehicle's air bag system.

Air bag warning label

Air bag warning labels, some required by the U.S. National Highway Traffic Safety Administration (NHTSA), are attached to the sunvisor to alert the driver and passengers of potential risks of the air bag system.

Features of your vehicle 4

Smart key **4-7**
- Record your key number 4-7
- Smart key functions 4-7
- Remote keyless entry system operations 4-10
- Transmitter precautions 4-12
- Battery replacement 4-13
- Mechanical key operations 4-13
- Immobilizer system 4-14

Theft-alarm system **4-15**
- Armed stage 4-15
- Theft-alarm stage 4-16
- Disarmed stage 4-16

Door locks **4-17**
- Operating door locks from outside the vehicle 4-17
- Operating door locks from inside the vehicle 4-18
- Door lock/unlock features 4-20
- Child-protector rear door lock 4-20
- Rear Occupant Alert (ROA) system 4-21

Safe Exit Warning (SEW) **4-22**
- Function settings 4-23
- Function operation 4-24

Liftgate **4-26**
- Non-Powered liftgate 4-26
- Power liftgate 4-27
- Emergency liftgate safety release 4-32

Smart liftgate **4-33**
- How to use the Smart Liftgate 4-33
- How to deactivate the Smart Liftgate function using the smart key 4-35

4 Features of your vehicle

• Detecting area.....4-36
Windows 4-37
• Power windows.....4-38
Hood 4-42
• Opening the hood 4-42
• Closing the hood 4-42
Fuel filler door 4-43
• Opening the fuel filler door 4-43
• Closing the fuel filler door 4-44
• Emergency fuel filler door release 4-44
Wide sunroof 4-47
• Blind 4-47
• Tilt open/close.....4-48
• Slide open/close 4-48
• Automatic reversal.....4-48
• Resetting the sunroof 4-49
• Sunroof open warning 4-50
Steering wheel.....4-51
• Electric Power Steering (EPS) 4-51
• Tilt and telescopic steering.....4-52
• Heated steering wheel 4-53
• Horn 4-54
Mirrors 4-54
• Inside rearview mirror 4-54
• Outside rearview mirror 4-65
Instrument cluster.....4-68
• Instrument cluster control.....4-69
• LCD display control.....4-69
• Gauges.....4-70

• Transmission shift indicator 4-74
LCD display 4-75
• LCD display modes 4-75
• Trip information (Trip computer) 4-87
• Trip Modes 4-88
• Warning messages 4-90
Warning and indicator lights 4-95
• Warning lights 4-95
• Indicator Lights 4-102
Head Up Display (HUD) 4-105
• Description 4-105
• Head Up Display ON/OFF 4-106
• Head Up Display Information 4-106
• Head Up Display Setting 4-107
Rear View Monitor (RVM) 4-107
• Function settings 4-108
• Function operation 4-109
• Function malfunction and limitations 4-110
Surround View Monitor (SVM) 4-112
• Function settings 4-113
• Function operation 4-114
• Function malfunction and limitations 4-117
Reverse Parking Distance Warning (PDW) 4-118
• Function settings 4-120
• Function operation 4-120
• Types of warning sound and indicator 4-121
• Function malfunction and precautions 4-121
Forward/Reverse Parking Distance Warning (PDW) 4-122
• Function settings 4-123

4 Features of your vehicle

• Function operation 4-123
• Function malfunction and limitations 4-125
Lighting 4-127
• Battery saver function 4-127
• Headlight (Headlamp) escort function 4-127
• Lighting control 4-128
• Daytime running light 4-128
• High beam operation 4-130
• High Beam Assist (HBA) 4-130
• Turn signals and lane change signals 4-134
• Headlight leveling device 4-135
• Dynamic Bending Light (DBL) 4-135
Wipers and washers 4-136
• Windshield wipers 4-136
• Front windshield washers 4-137
Interior light 4-138
• Automatic turn off function 4-138
• Map lamp 4-139
• Room lamp 4-140
• Liftgate room lamp 4-140
• Door courtesy lamp (Front seat) 4-140
• Glove box lamp 4-140
• Vanity mirror lamp 4-141
Welcome system 4-141
• Welcome light 4-141
• Escort welcome 4-142
• Interior light 4-142
Defroster 4-142
• Rear window defroster 4-142

Features of your vehicle 4

Climate control system 4-143
• System operation.....4-143
• Climate control air filter 4-145
• Air Conditioning refrigerant label.....4-146
• Checking the amount of air conditioner refrigerant and compressor lubricant 4-147
Automatic climate control system 4-148
• Automatic heating and air conditioning 4-149
Windshield defrosting and defogging 4-156
• Automatic climate control system.....4-156
• Operation tips 4-157
• Defogging logic 4-157
• Automatic ventilation 4-159
• Activate upon Washer Fluid Use 4-160
• Recirculation Mode Plus 4-161
• Sunroof inside air recirculation 4-161
• Smart ventilation.....4-161
• Remote start.....4-162
Storage compartments 4-162
• Center console storage 4-163
• Glove box.....4-163
Interior features 4-164
• Cup holder.....4-164
• Seat warmer 4-165
• Air ventilation seat.....4-166
• Sun visor 4-167
• Power outlet 4-168
• USB charger.....4-169
• Wireless smart phone charging system.....4-169

4 Features of your vehicle

• Coat hook 4-173
• Floor mat anchor (s) 4-173
• Luggage net (holder)..... 4-174
Infotainment system 4-175
• Antenna..... 4-175
• USB port..... 4-175
Declaration of Conformity..... 4-176
• FCC 4-176

Features of your vehicle

Smart key

Record your key number

The key code number is stamped on the key code tag attached to the key set. If you lose your keys, this number will enable an authorized Kia dealer to duplicate the keys easily.

Remove the key code tag and store it in a safe place. Also, record the key code number and keep it in a safe and handy place, but not in the vehicle.

⚠ WARNING

Smart key

Never leave the keys in your vehicle with unsupervised children. Leaving children unattended in a vehicle with a smart key is dangerous. Children copy adults and they could press the start button. The key would enable children to operate power windows or other controls, or even make the vehicle move, which could result in serious bodily injury or death.

Smart key functions

Type A

OCK040673N

Type B

OCK040005N

1. Door lock
2. Door unlock
3. Liftgate open (if equipped)
4. Panic alarm
5. Remote start

With smart key, you can lock or unlock doors (and liftgate (if equipped)) and start the engine without inserting the key. Refer to the following, for more details.

Locking

Pressing the button of the front outside door handles with all doors closed and any door unlocked, locks all the doors. The hazard warning lights will blink and the chime will sound once to indicate that all doors are locked. The button will only operate when the smart key is within 28~40 in. (0.7~1 m) from the outside door handle. If you want to make sure that a door has locked or not, you should check the door lock button inside the vehicle or pull the outside door handle.

In some instances, when the outside door button is selected, the doors will not lock and an audible chime will sound for 3 seconds if any of the following occurs:

- The smart key is in the vehicle.
- The ENGINE START/STOP button is in the ACC or ON position.
- Any door is opened.

Unlocking

Pressing the button of the driver's (or front passenger's) outside door handle with all doors closed and locked, unlocks the driver's door.

The hazard warning lights will blink twice and the chime will sound twice to indicate that the driver's door is unlocked. Also, the outside rearview mirrors will automatically unfold if the outside rearview mirror folding switch is in the AUTO position.

The button will only operate when the smart key is within 28~40 in. (0.7~1 m) from the outside door handle.

When Two Press Unlock function is activated,

- If you press the driver's outside door handle button, the driver's door will unlock.
- If you press the driver's outside door handle button within four seconds again, then all the doors will unlock.

✻ NOTICE

You can activate or deactivate the Two Press Unlock function by selecting 'User Settings (LCD display) or Setup → Vehicle (Infotainment System screen) → Door → Two Press Unlock'.

Liftgate unlocking (if equipped)

If you are within 28 ~ 40 in (0.7 ~ 1 m) from the outside liftgate handle, with your smart key in possession, the lift gate will unlock and open when you press the liftgate handle switch.

The hazard warning lights will blink twice to indicate that the liftgate is unlocked.

Also, once the liftgate is opened and then closed, the liftgate will lock automatically.

Smart key precautions

- If you lose your smart key, you will not be able to start the engine. Tow the vehicle, if necessary, and contact an authorized Kia dealer.
- A maximum of 2 smart keys can be registered to a single vehicle. If you lose a smart key, you should immediately take the vehicle and key to your authorized Kia dealer to protect it from potential theft.
- The smart key will not work if any of following occurs:
  - The smart key is close to a radio transmitter such as a radio station or an airport which can interfere with normal operation of the smart key.
  - The smart key is near a mobile two way radio system or a cellular phone.
  - Another vehicle's smart key is being operated close to your vehicle.

If the smart key does not work correctly, you may lock and unlock the door with the mechanical key.

If you have a problem with the smart key, contact an authorized Kia dealer.

- If the smart key is in close proximity to your cell phone or smart phone, the signal from the smart key could be blocked by normal operation of your cell phone or smart phone.
  This is especially important when the phone is active such as making calls, receiving calls, text messaging, and/or sending/receiving emails. Avoid placing the smart key and your cell phone or smart phone in the same pants or jacket pocket and maintain adequate distance between the two devices.
- Do not leave the smart key near metallic objects such as golf bags, metal cases and so on.
- Door Lock/Unlock failure or poor starting can occur when the smart key is placed near metallic objects.
- Always carry your smart key when you leave the car. An unattended smart key close to the vehicle can cause the vehicle battery to be discharged.

- Internal circuit damage may occur when the key comes into contact with moisture (beverage, water etc.) or heat. In this case, warranty repair is not available. Damage to the smart key due to exposure to liquids or heat is not covered by the manufacturer's vehicle warranty.
- When the smart key is left with a bunch of keys, the Lock/Unlock button for doors and liftgate can be accidently pressed. Pay careful attention to key use.

⚠ CAUTION

Transmitter

Keep the smart key away from water or any liquid as it can become damaged and not function properly.

Remote keyless entry system operations

Type A

OCK040673N

Type B

OCK040005N

Lock (1)

All doors are locked if the lock button is pressed. If all doors (and liftgate) are closed, the hazard warning lights will blink once to indicate that all doors (and liftgate) are locked.

However, if any door remains open, the hazard warning lights will not operate. But if all doors are closed after the lock button is pressed, the hazard warning lights will blink once.

Unlock (2)

All doors (and liftgate) can be unlocked if the unlock button is pressed. The hazard warning lights will blink twice again to indicate that all doors (and liftgate) are unlocked. After pressing this button, the doors will lock automatically unless you open any door within 30 seconds.

When Two Press Unlock function is activated,

- If you press the Door Unlock button (2) on the smart key, the driver's door will unlock.
- If you press Door Unlock button(2) on the smart key within four seconds again, then all the doors will unlock.

✻ NOTICE

You can activate or deactivate the Two Press Unlock function by selecting 'User Settings (LCD display) or Setup → Vehicle (Infotainment System screen) → Door → Two Press Unlock'.

✻ NOTICE

If the keyless entry system is inoperative due to exposure to water or liquids, it will not be covered by your manufacturer's vehicle warranty.

Liftgate unlock (3) (if equipped)

The liftgate is unlocked if the button is pressed for more than 1 second.

The hazard warning lights will blink twice to indicate that the liftgate is unlocked.

However, after pressing this button, the liftgate will lock automatically unless you open the liftgate within 30 seconds.

Also, once the liftgate is opened and hen closed, the liftgate will lock automatically.

Panic alarm (4)

The horn sounds and the hazard warning lights blink for about 30 seconds if this button is pressed for more than 0.5 seconds. To stop the horn and lights, press any button on the transmitter.

Remote start (5)

You can start the vehicle using the remote start button (5) on the smart key.

To start and stop the vehicle remotely:

1. Press the door lock button (1), and then the hazard warning lights blink once to alert you.
2. Press the remote start button (5) for more than 2 seconds to start engine within 4 seconds after pressing the door lock button (1).
3. If you want to stop the engine, press the remote start button (5) again.

If someone without a designated smart key rides your vehicle while remote starting, the engine is automatically stopped for security.

✻ NOTICE

After remotely starting the engine, the engine will turn off automatically after 10 minutes if you do not ride your vehicle.

⚠ CAUTION

- The remote start will not work if you exceed the operating distance limit (about 32.8 feet (10 m)).
- Avoid idling the engine for prolonged periods to obey the emission regulations in your country.
- Laws in your country may restrict the use of remote start.
  You should check country regulations before using this remote starting system.
- The vehicle must be in P (Park) for the remote start function to start.
- If the hood or the liftgate is opened, you can't start the engine remotely.

Transmitter precautions

The smart key will not work if any of following occurs:

- You exceed the operating distance limit (about 32.8 feet [10 m]).
- The battery in the smart key is weak.
- Other vehicles or objects may be blocking the signal.
- The weather is extremely cold.
- The smart key is close to a radio transmitter such as a radio station or an airport which can interfere with normal operation of the transmitter.

If the smart key does not work correctly, you may lock and unlock the door with the mechanical key. If you have a problem with the smart key, contact an authorized Kia dealer.

- If the transmitter is in close proximity to your cell phone or smart phone, the signal from the transmitter could be blocked by normal operation of your cell phone or smart phone. This is especially important when the phone is active such as making calls, receiving calls, text messaging, and/or sending/receiving emails. Avoid placing the transmitter and your cell phone or smart phone in the same pants or jacket pocket and maintain adequate distance between the two devices.

⚠ CAUTION

Transmitter damage

Do not drop, wet or expose the keyless entry system transmitter to heat or sunlight.

This device complies with Part 15 of the FCC rules.

Operation is subject to the following two conditions:

1. This device may not cause harmful interference, and
2. This device must accept any interference received, including interference that may cause undesired operation.

✻ NOTICE

Changes or modifications not expressly approved by the party responsible for compliance could void the user's authority to operate the equipment. If the keyless entry system is inoperative due to changes or modifications not expressly approved by the party responsible for compliance, it will not be covered by your manufacturer's vehicle warranty.

Battery replacement

A battery should last for several years, but if the smart key is not working properly, try replacing the battery with a new one. If you are unsure how to use or replace the battery, contact an authorized Kia dealer.

OCK040674N

1. Pry open the smart key center cover using screw (–) driver.
2. Replace the battery with a new battery (CR2032). When replacing the battery, make sure the battery position is correct.
3. Install the battery in the reverse order of removal.

Mechanical key operations

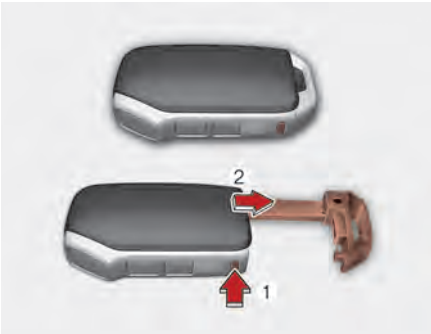

OCK040675N

- Used to lock and unlock the glove box.
- Lock and unlock the doors when the vehicle or smart key battery is discharged.

Smart key

To remove the mechanical key (2), press and hold the release button (1) and remove the mechanical key.

To reinstall the mechanical key, put the key into the hole and push it until a click sound is heard.

Immobilizer system

Your vehicle is equipped with an electronic engine immobilizer system to reduce the risk of unauthorized vehicle use.

Whenever the ENGINE START/STOP button is changed to the ON position, the immobilizer system checks and verifies if the key is valid or not.

If the key is valid, the engine will start.

If the key is invalid, the engine will not start.

✻ NOTICE

In order to prevent theft of your vehicle, do not leave spare keys anywhere in your vehicle. Your Immobilizer password is a customer unique password and should be kept confidential. Do not leave this number anywhere in your vehicle.

To deactivate the immobilizer system

Change the ENGINE START/STOP button to the ON position.

To activate the immobilizer system

Change the ENGINE START/STOP button to the OFF position. The immobilizer system activates automatically. Without a valid smart key for your vehicle, the engine will not start.

In order to prevent theft of your vehicle, do not leave spare keys anywhere in your vehicle.

✻ NOTICE

Keep each key separate in order to avoid a starting malfunction.

Do not put metal accessories near the smart key.

Metal accessories may interrupt the transponder signal and may prevent the engine from being started.

If you need additional keys or lose your keys, consult an authorized Kia dealer.

⚠ CAUTION

Immobilizer damage

Do not expose your immobilizer system to moisture, static electricity or rough handling. This may damage your immobilizer.

⚠ CAUTION

Immobilizer alterations

Do not change, alter or adjust the immobilizer system because it could cause the immobilizer system to malfunction.

This device complies with Part 15 of the FCC rules.

Operation is subject to the following two conditions:

1. This device may not cause harmful interference, and
2. This device must accept any interference received, including interference that may cause undesired operation.

✻ NOTICE

Changes or modifications not expressly approved by the party responsible for compliance could void the user's authority to operate the equipment.

Theft-alarm system

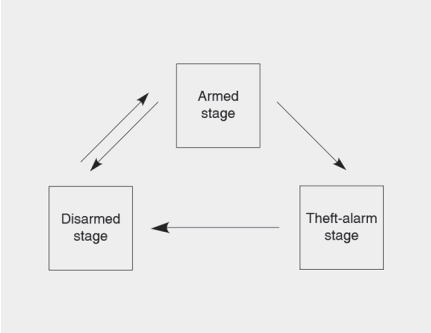

0DEEV068006NR

This system is designed to provide protection from unauthorized entry into the vehicle. This system is operated in three stages: the first is the “Armed” stage, the second is the “Theft-alarm” stage, and the third is the “Disarmed” stage. If triggered, the system provides an audible alarm with blinking of the hazard warning lights.

Armed stage

Park the vehicle and stop the engine.

Arm the system as described below.

1. Turn off the engine.
2. Make sure that all doors (and liftgate) and engine hood are closed and latched.
3. Lock the doors by depressing the door lock button on the smart key.

After completion of the steps above, the hazard warning lights will blink

(for smart key, the chime also sounds) once to indicate that the system is armed.

If any door (or liftgate) or engine hood remains open, the hazard warning lights and the chime will not operate and the theft-alarm will not arm. If all doors and liftgate and engine hood are closed after the lock button is pressed, the hazard warning lights blink once.

The system can also be armed by locking the doors with the key from the front doors; however, the hazard warning lights will not blink using this method.

✻ NOTICE

The theft-alarm system can be deactivated by an authorized Kia dealer. If you want this feature, consult an authorized Kia dealer.

Do not arm the system until all passengers have left the vehicle. If the system is armed while a passenger(s) remains in the vehicle, the alarm may be activated when the remaining passenger(s) leave the vehicle. If any door (or liftgate) or engine hood is opened within 30 seconds after the system enters the armed stage, the system is disarmed to prevent an unnecessary alarm.

Theft-alarm stage

The alarm will be activated if any of the following occurs while the system is armed.

- A front or rear door is opened without using the smart key.
- The liftgate is opened without using the smart key (if equipped).
- The engine hood is opened.

The horn will sound and the hazard warning lights will blink continuously for approximately 30 seconds, and repeat the horn 2 times unless the system is disarmed. To turn off the system, unlock the doors with the smart key.

Disarmed stage

The system will be disarmed when

- The doors (and liftgate (if equipped)) are unlocked with the smart key.

After depressing the unlock button, the hazard warning lights will blink and the chime will sound twice (in smart key) to indicate that the system is disarmed.

After depressing the unlock button, if any door (or liftgate) is not opened within 30 seconds, the system will be rearmed.

- Avoid trying to start the engine while the alarm is activated. The vehicle starting motor is disabled during the theft-alarm stage.

If the system is not disarmed with the smart key, open the doors by using the mechanical key and start the engine by directly pressing the ENGINE START/STOP button with the smart key.

- If you lose your keys, consult your authorized Kia dealer.

CAUTION

Adjusting alarm system

Do not change, alter or adjust the theft-alarm system because it could cause the theft-alarm system to malfunction.

NOTICE

Malfunctions caused by improper alterations, adjustments or modifications to the theft-alarm system are not covered by your vehicle manufacturer warranty.

Door locks

Operating door locks from outside the vehicle

Mechanical key

To remove the cover :

1. Pull out the door handle.
2. Press the lever (1) located inside the bottom part of the cover with a key or flat-head screwdriver.
3. Push out the cover (2) while pressing the lever.

- Turn the key counterclockwise (3) once to unlock driver's door and turn clockwise (4) once to lock driver's door.
- If you lock/unlock the driver's door with a key, only the driver's door will lock/unlock.
- Once the doors are unlocked, they may be opened by pulling the door handle.
- When closing the door, push the door by hand. Make sure the doors are closed securely.

✻ NOTICE

- In cold and wet climates, door lock and door mechanisms may not work properly due to freezing conditions.
- If the door is locked/unlocked multiple times in rapid succession with either the vehicle key or door lock switch, the system may stop operating temporarily in order to protect the circuit and prevent damage to system components.

⚠ CAUTION

Do not unnecessarily open and close the door repeatedly or with excessive force. Such action can damage the vehicle door.

✻ NOTICE

Always place the ENGINE START/STOP button is in the OFF position, engage the parking brake, close all windows, and lock all doors when leaving your vehicle unattended.

Operating door locks from inside the vehicle

With the door lock button

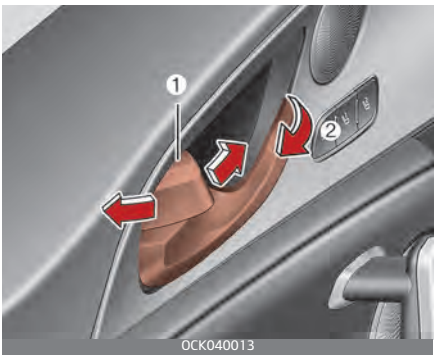

- To unlock a door, push the door lock button (1) to the "Unlock" position. The red mark on the handle will be visible.
- To lock a door, push the door lock button (1) to the "Lock" position. If the door is locked properly, the red mark on the handle will not be visible.
- To open a door, pull the door handle (2) outward.
- If the inner door handle of the driver's (or front passenger's) door is pulled when the door lock button is in the lock position, the button will unlock and the door will open.
- Front doors cannot be locked if the smart key is in the vehicle and any front door is opened.
- Doors cannot be locked if the smart key is in the vehicle and a door is open.

⚠ WARNING

Do not pull the inner door handle while the vehicle is moving.

If a power door lock ever fails to function while you are in the vehicle, try one or more of the following techniques to exit :

- Operate the door unlock feature repeatedly (both electronic and manual) while simultaneously pulling on the door handle.
- Operate the other door locks and handles, front and rear.
- Lower a front window and use the key to unlock the door from outside.

With central door lock switch

Driver side

Passenger side

Operate by pressing the central door lock switch.

For Driver's door:

- When pushing down on the right portion (1) of the switch, all vehicle doors will lock.
- When pushing down on left portion (2) of the switch, all vehicle doors will unlock.

For Front Passenger's door:

- When pushing down on the front portion (1) of the switch, all vehicle doors will lock.
- When pushing down on the rear portion (2) of the switch, all vehicle doors will unlock.

If the smart key is in the vehicle and any front door is opened, the doors will not lock even though the right portion (1, driver's door) or the front portion (1, passenger's door) of the central door lock switch is pressed.

⚠ WARNING

Doors

The doors should always be fully closed and locked while the vehicle is in motion to prevent accidental opening of the door.

⚠ WARNING

Unattended children/animals

Never leave children or animals unattended in your vehicle. An enclosed vehicle can become extremely hot, causing death or severe injury to unattended children or animals who cannot escape the vehicle.

Door lock/unlock features

Impact sensing door unlock system

All doors will automatically unlock when an impact causes the air bags to deploy.

Speed sensing door lock system

All doors will automatically lock after the vehicle speed exceeds 9 mph (15 km/h).

You can activate or deactivate the Auto door lock/unlock by selecting 'User Settings (LCD display) or Setup → Vehicle (Infotainment System screen) → Door → Auto Lock/Auto Unlock'.

Child-protector rear door lock

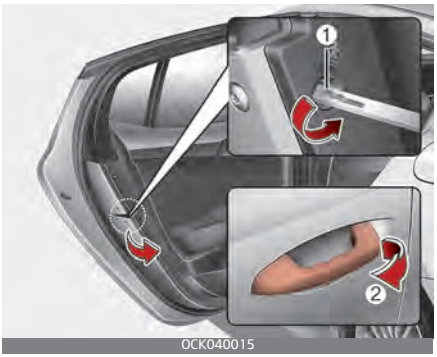

The child safety lock is provided to help prevent children from accidentally opening the rear doors from inside the vehicle. The rear door safety locks should be used whenever children are in the vehicle.

1. Open the rear door.
2. Turn the child safety lock (1) located on the rear edge of the door to the lock (🚸) position. When the child safety lock is in the lock position, the rear door will not open even when the inner door handle is pulled.
3. Close the rear door.

To open the rear door, pull the outside door handle (2).

Even though the doors may be unlocked, the rear door will not open by pulling the inner door handle until the rear door child safety lock is unlocked.

WARNING

Rear door locks

Use the rear door safety locks whenever children are in the vehicle. If a child accidently opens the rear doors while the vehicle is moving, they may fall out.

Rear Occupant Alert (ROA) system

The Rear Occupant Alert (ROA) system is provided to help prevent exiting the vehicle with the rear passenger left in the vehicle.

- When you open the front door after opening and closing the rear door and turning off the engine, the “Check rear seats” warning message appears on the cluster.

OYB040608L

You can activate or deactivate the Rear Occupant Alert by selecting 'User Settings (LCD display) or Setup → Vehicle (Infotainment System screen) → Convenience → Rear Occupant Alert'.

WARNING

The Rear Occupant Alert (ROA) system does not actually detect objects or people in the rear seat. By using a rear door opened and closed history, the system informs the driver that there may be something in the rear seat.

CAUTION

The Rear Occupant Alert (ROA) system uses a rear door opened and closed history.

The history is reset after the driver turns off ignition normally, gets off the vehicle and locks the door remotely using the remote keyless entry. So even if a rear door does not reopen, the ROA system alert can occur.

For example, after the ROA system alert occur, if the driver do not lock the door then ride and drive again, the alert can occur.

Safe Exit Warning (SEW) (if equipped)

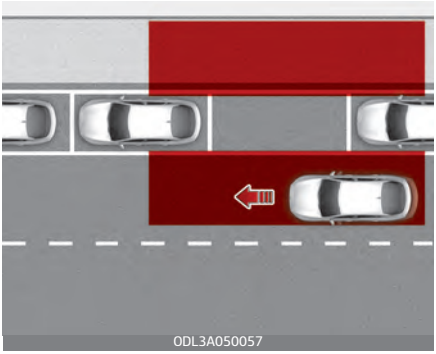
ODL3A050057

After the vehicle stops, when an approaching vehicle from the rear area is detected as soon as a passenger opens a door, Safe Exit Warning will warn the driver with a warning message and an audible warning to help prevent a collision.

⚠ CAUTION

The timing of the warning may vary depending on the speed of the approaching vehicle.

Detecting sensor

OCK050051N

[1] : Rear corner radar

Refer to the picture above for the detailed location of the detecting sensor.

✻ NOTICE

For more details on the precautions of the rear corner radars, refer to "Blind-Spot Collision-Avoidance Assist (BCA) (if equipped)" on page 5-89.

Function settings

Setting

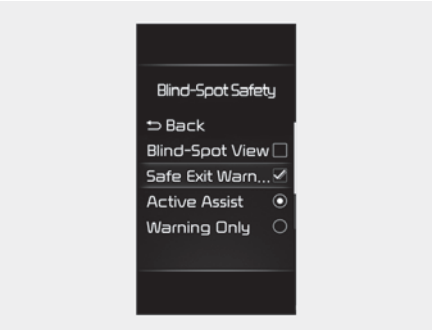

OCK040651L

With the ENGINE START/STOP button in the ON position, and select 'User Settings (LCD display) or Setup → Vehicle (Infotainment System screen) → Driver Assistance → Blind-Spot Safety → Safe Exit Warning' to turn on Safe Exit Warning and deselect to turn off.

⚠ WARNING

If 'Safe Exit Warning' is deselected, the function cannot assist you.

✻ NOTICE

If the engine is restarted, Safe Exit Warning will maintain the last setting.

Warning timing

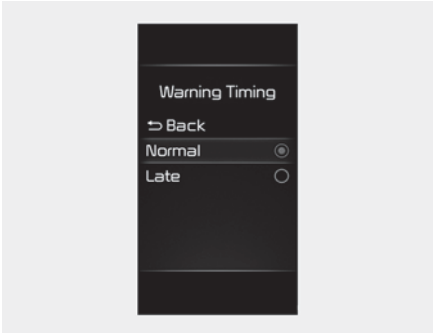

OCK040652L

With the ENGINE START/STOP button in the ON position, and select 'User Settings (LCD display) or Setup → Vehicle (Infotainment System screen) → Driver Assistance → Warning Timing' to change the initial warning activation time for Blind-Spot Safety system.

When the vehicle is first delivered, warning timing is set to 'Normal'. If you change the warning timing, the warning time of other Driver Assistance systems may change.

Warning volume

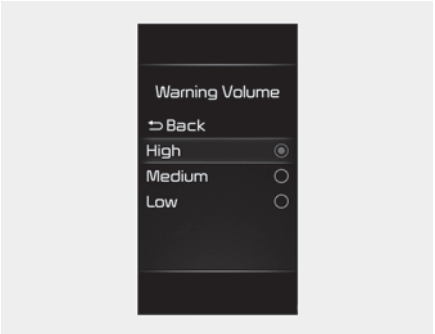

OCK040653L

With the ENGINE START/STOP button in the ON position, and select 'User Settings (LCD display) or Setup → Vehicle (Infotainment System screen) → Driver Assistance → Warning Volume' to change the warning volume to 'High', 'Medium' or 'Low' for Blind-Spot Safety system.

If you change the warning volume, the warning volume of other Driver Assistance systems may change. Set the warning volume after you learn it sufficiently.

⚠ CAUTION

- The setting of the Warning Timing and Warning Volume applies to all functions of the Safe Exit Warning.
- Even though 'Normal' is selected for warning timing, if the vehicles approaches at high speed from the rear, the initial warning activation time may seem late.
- Select 'Late' for warning timing when traffic is light and when driving speed is slow.

Function operation

Function warning

Collision warning when exiting vehicle

OCK040553L

- When an approaching vehicle from the rear is detected at the moment a door is opened, the 'Watch for traffic' warning message will appear on the cluster, and an audible warning will sound.
- Safe Exit Warning will warn the driver when your vehicle speed is below 2 mph (3 km/h), and the speed of the approaching vehicle from the rear is above 3 mph (5 km/h).

WARNING

- For your safety, change the Settings after parking the vehicle at a safe location.
- If any other function's warning message is displayed or audible warning is generated, Safe Exit Warning message may not be displayed and audible warning may not be generated.
- You may not hear the warning sound of Safe Exit Warning if the surrounding is noisy.
- Safe Exit Warning does not operate in all situations or cannot prevent all collisions.
- Safe Exit Warning may warn the driver late or may not warn the driver depending on the road and driving conditions. Always check vehicle surroundings.
- Safe Exit Warning does not operate if there is a problem with Blind-Spot Safety system.
  - The warning message of Blind-Spot Safety system will appear when:
  - The warning message of Blind-Spot Safety system appears on the cluster.
  - Blind-Spot Safety system sensor or the sensor surrounding is polluted or covered
  - Blind-Spot Safety system fails to warn passengers or prematurely warn passengers

NOTICE

After the engine is turned off, Safe Exit Warning system operates approximately for 3 minutes, but turns off immediately if the doors are locked.

Limitations of the function

Safe Exit Warning may not operate normally, or the function may operate unexpectedly under the following circumstances:

- When getting off the vehicle at a place with overgrown trees or grass
- When getting off the vehicle on a wet road
- Speed of the approaching vehicle is fast or slow

CAUTION

For more details on the limitations of the rear corner radar, refer to "Blind-Spot Collision-Avoidance Assist (BCA) (if equipped)" on page 5-89.

WARNING

- Safe Exit Warning may not operate normally if interfered by strong electromagnetic waves.
- Safe Exit Warning may not operate for 3 seconds after the vehicle is started, or the rear corner radars are initialized.

Liftgate

Non-Powered liftgate

Opening the liftgate

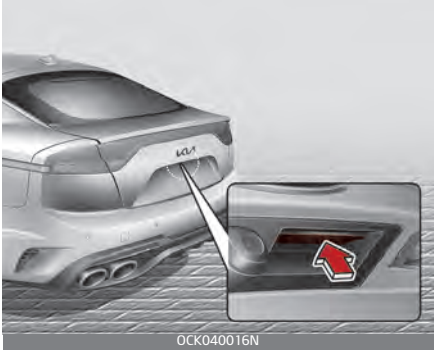

- The liftgate is locked or unlocked when all doors are locked or unlocked with the central door lock/unlock switch.
- If unlocked, the liftgate can be opened by pressing the handle and pulling it up.
- Once the liftgate is opened and then closed, the liftgate locks automatically. (All doors must be locked.)

⚠ WARNING

Exhaust fumes

The liftgate should always be kept completely closed while the vehicle is in motion. If it is left open or ajar, exhaust gases may enter the car and serious illness or death may result.

⚠ WARNING

The liftgate swings upward. Make sure no objects or people are near the rear of the vehicle when opening the liftgate.

✻ NOTICE

In cold and wet climates, liftgate lock and liftgate mechanisms may not work properly due to freezing conditions.

Closing the liftgate

Lower and push down the liftgate firmly. Make sure that the liftgate is securely latched.

⚠ CAUTION

Make certain that you close the liftgate before driving your vehicle. Possible damage may occur to the liftgate gas lifters and attached

hardware if the liftgate is not closed prior to driving.

⚠ WARNING

Make sure your hands, feet and other parts of your body are safely out of the way before closing the liftgate.

⚠ CAUTION

Make sure nothing is near the liftgate latch and striker while closing the liftgate. It may damage the liftgate's latch.

⚠ WARNING

Exhaust fumes

If you drive with the liftgate open, you will draw dangerous exhaust fumes into your vehicle which can cause serious injury or death to vehicle occupants. If you must drive with the liftgate open, keep the air vents and all windows open so that additional outside air comes into the vehicle.

⚠ WARNING

Riding in cargo area

Occupants should never ride in the rear cargo area where no restraints are available.To avoid injury in the event of an accident or sudden stops, occupants should always be properly restrained.

Power liftgate (if equipped)

(1) Power liftgate open/close button

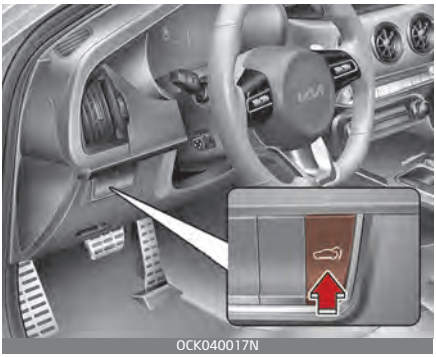

(2) Power liftgate handle switch

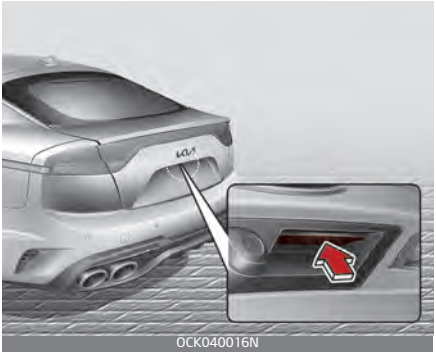

(3) Power liftgate close button

OCK040018

NOTICE

If the ENGINE START/STOP button is ON, the power liftgate can operate when the automatic transmission is in P (Park).

WARNING

Never leave children or animals unattended in your vehicle.

Children or animals might operate the power liftgate which could result in injury to themselves or others, or damage the vehicle.

NOTICE

Do not put heavy objects on the power liftgate when you operate.

WARNING

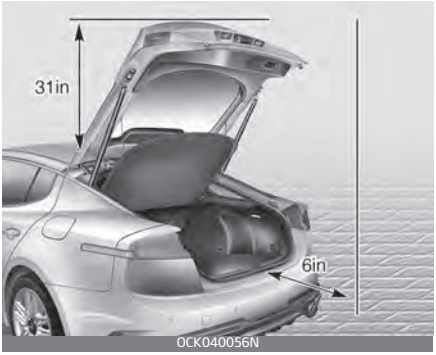

OCK040056N

Make sure that there are no people or objects in the path of the power liftgate (or smart liftgate) prior to use. Serious injury, damage to the vehicle or damage to surrounding objects may result if contact with the power liftgate (or smart liftgate) occurs.

CAUTION

Do not close or open the power liftgate manually. This may cause damage to the power liftgate. If it is necessary to close or open the power liftgate manually when the battery is discharged or disconnected, do not apply excessive force.

Opening the liftgate

The power liftgate will open automatically by doing one of the following:

- Press the liftgate unlock button on the smart key for approximately one second.

OCK040672N

- Press the power liftgate open button for approximately one second.

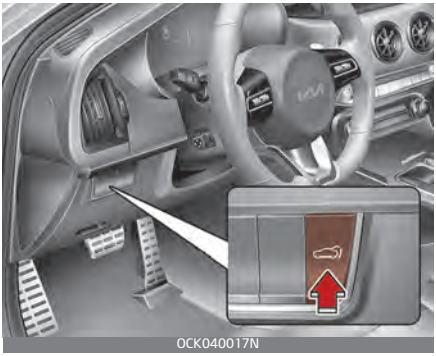

OCK040017N

- Press the liftgate handle switch carrying the smart key with you.

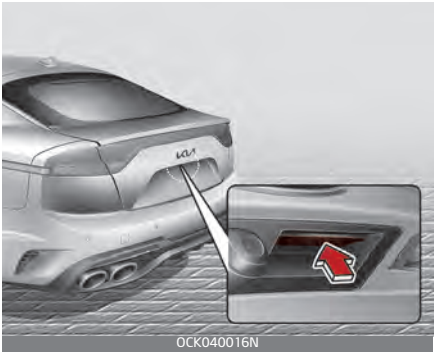

OCK040016N

Closing the liftgate

- Press the power liftgate close button for approximately one second when the liftgate is opened.
  The liftgate will close and lock automatically.
- For emergency stop while power liftgate operating, press the power liftgate open/close button shortly.

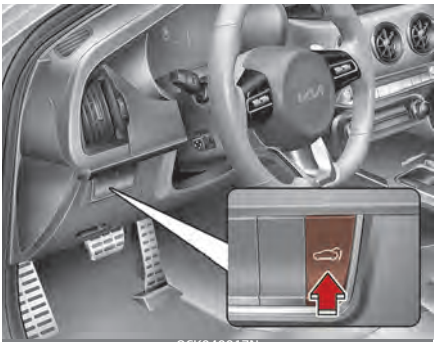

OCK040017N

- Press the power liftgate close button for approximately one second when the liftgate is opened.

The liftgate will close and lock automatically.

OCK040018

Power liftgate Non-Opening or Closing Conditions :

- The power liftgate will not open or close automatically, when the vehicle is moving more than 2 mph (3 km/h).
- The power liftgate can be operated when the engine is not running.
  However, the power liftgate operation consumes large amounts of vehicle electric power. To prevent the battery from draining, do not operate it excessively (e.g., more than approximately 10 times repeatedly).
- Do not modify or repair any part of the power liftgate by yourself. This must be done by an authorized Kia dealer.
- Before jacking up the vehicle to change a tire or repair the vehicle, open the power liftgate. Do not operate the power liftgate when the vehicle is raised or this could cause the power liftgate to operate improperly.
- If there are obstacles such as snow on the power liftgate, it may not open automatically. After removing the obstacle, try to open it again.

Automatic stop and Reverse

OCK040019N

If, during power opening or closing, the liftgate is blocked by an object or part of someone's body, the power liftgate will detect the resistance and it will stop movement or move to the full open position to allow the object to be cleared.

However, if an object is thin or soft, or the liftgate is near the latched position, the automatic stop and reversal may not detect the resistance and the closing operation will continue. If the power liftgate is forced by a strong impact, the automatic stop and reversal may operate.

If the automatic stop and reverse feature operates more than twice during one opening or closing operation, the power liftgate may stop at that position.

If this occurs, close the liftgate manually and operate the liftgate automatically again.

⚠ WARNING

To prevent serious injury and damage take the following precautions when operating the power liftgate :

- Keep all faces, hands, arms, body parts and other objects away from the path of the power liftgate.
- Do not intentionally place any body parts or objects in the path of the power liftgate to make sure the automatic stop and reversal operates.
- Do not allow children to play with the power liftgate.

Power liftgate opening height user setting

The driver may set the height of a fully opened liftgate by following the below instruction.

1. Position the liftgate manually to the height you prefer.
2. Press the liftgate close button for more than 3 seconds.
3. Close the liftgate manually after hearing the buzzer sound.

The liftgate will open to the height the driver has set up.

How to reset the power liftgate

If the battery has been discharged or disconnected, or if the related fuse has been replaced or disconnected, for the power liftgate to operate normally, reset the power liftgate as follows:

1. Shift the vehicle to P (Park).
2. While Pressing the liftgate close button, press the liftgate handle switch for more than 3 seconds. (the chime will sound)

3. Close the liftgate manually.

If the power liftgate does not work properly after the above procedure, have the system checked by an authorized Kia dealer.

Emergency liftgate safety release

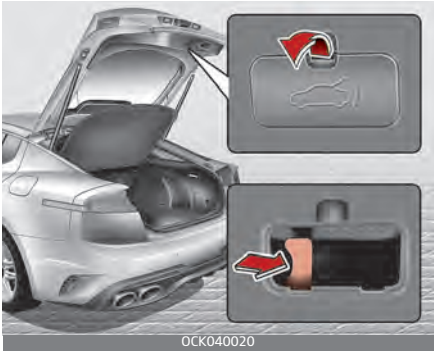

Your vehicle is equipped with the emergency liftgate safety release lever located on the bottom of the liftgate. When someone is inadvertently locked in the luggage compartment, the liftgate can be opened by doing as follows:

1. Remove the cover.
2. Push the release lever to the right.
3. Push up the liftgate.

⚠ WARNING

- For emergencies, be fully aware of the location of the emergency liftgate safety release lever in the vehicle and how to open the liftgate if you are accidentally locked in the luggage compartment.
- No one should be allowed to occupy the luggage compartment of the vehicle at any time. The luggage compartment is a very dangerous location in the event of a crash.
- Use the release lever for emergencies only. Use with extreme caution, especially while the vehicle is in motion.

⚠ WARNING

NEVER allow anyone to occupy the rear cargo area of the vehicle at any time. If the liftgate is partially or totally latched and the person is unable to get out, serious injury or death could occur due to lack of ventilation, exhaust fumes and rapid heat build-up, or because of exposure to cold weather conditions.The liftgate is also a highly dangerous location in the event of a crash because it is not a protected occupant space but is a part of the vehicle's crush zone.

- You and your passengers must be aware of the location of the Emergency Liftgate Safety Release lever in this vehicle and how to open the liftgate in case you are accidentally locked in the liftgate.
- Your vehicle should be kept locked and the Smart Key should be kept out of the reach of children.

Parents should teach their children about the dangers of playing in the rear cargo area or using the liftgate.
- Use the release lever for emergencies only.

WARNING

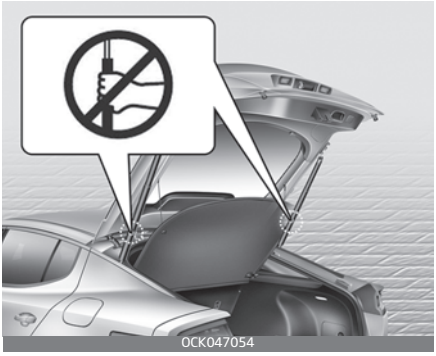
OCK047054

Do not grasp the part supporting the liftgate (gas lifter), as this may cause serious injury.

Smart liftgate (if equipped)

OCK040021N

On a vehicle equipped with a smart key, the liftgate can be opened with no-touch activation using the Smart Liftgate system.

How to use the Smart Liftgate

The liftgate can be opened with notouch activation satisfying all the conditions below.
- After 15 seconds when all doors are closed and locked
- Positioned in the detecting area for more than 3 seconds.

NOTICE

- The Smart Liftgate does not operate when:
  - The smart key is detected within 15 seconds after the doors are closed and locked, and is continuously detected.

- The smart key is detected within 15 seconds after the doors are closed and locked, and 60 inches (1.5 m) from the front door handles (for vehicles equipped with Welcome Light).
- A door is not locked or closed.
- The smart key is in the vehicle.

1. Setting

You can activate or deactivate the Smart Liftgate by selecting 'User Settings (LCD display) or Setup → Vehicle (Infotainment System screen) → Door → Smart Liftgate'.

2. Detect and Alert

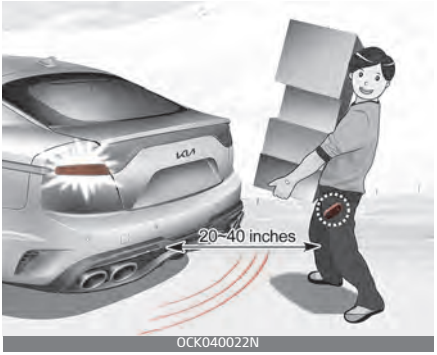

OCK040022N

If you are positioned in the detecting area (20 ~ 40 inches (50 ~100 cm) behind the vehicle) carrying a smart key, the hazard warning lights will blink and the chime will sound for about 3 seconds to alert you the smart key has been detected and the liftgate will open.

✻ NOTICE

Do not approach the detecting area if you do not want the liftgate to open. If you have unintentionally entered the detecting area and the hazard warning lights and chime starts to operate, leave the detecting area with the smart key. The liftgate will stay closed.

3. Automatic opening

OCK040023N

The hazard warning lights will blink and the chime will sound 2 times and then the liftgate will slowly open.

Make certain that you close the liftgate before driving your vehicle.

Make sure there are no people or objects around the liftgate before opening or closing the liftgate.

Make sure to deactivate the Smart liftgate function when washing your vehicle.

Otherwise, the liftgate may open inadvertently.

⚠ WARNING

Make sure objects in the rear cargo area do not come out when opening the liftgate as this could cause serious injury.

✻ NOTICE

The key should be kept out of reach of children. Children may inadvertently open the Smart Liftgate while playing around the rear area of the vehicle.

How to deactivate the Smart Liftgate function using the smart key

OCK040005N

1. Door lock
2. Door unlock
3. Liftgate open
4. Panic
5. Remote start

If you press any button of the smart key during the Detect and Alert stage, the Smart Liftgate function will be deactivated.

Make sure to be aware of how to deactivate the Smart Liftgate function for emergency situations.

✻ NOTICE

- If you press the door unlock button (2), the Smart Liftgate function will be deactivated temporarily. But, if you do not open any door for 30 seconds, the smart liftgate function will be activated again.
- If you press the liftgate open button (3) for more than 1 second, the liftgate opens.
- If you press the door lock button (1) or liftgate open button (3) when the Smart Liftgate function is not in the Detect and Alert stage, the smart liftgate function will not be deactivated.
- In case you have deactivated the Smart Liftgate function by pressing the smart key button or opening a door, the smart liftgate function can be activated again by closing and locking all doors.

Detecting area

OCK040024N

- The Smart Liftgate operates with a welcome alert if the smart key is detected within 20 ~ 40 inches (50 ~ 100 cm) from the liftgate.
- The alert stops at once if the smart key is positioned outside the detecting area during the Detect and Alert stage.

✻ NOTICE

- The Smart Liftgate function will not work if any of the following occurs :
  - The smart key is close to a radio transmitter such as a radio station or an airport which can interfere with normal operation of the transmitter.
  - The smart key is near a mobile two way radio system or a cellular phone.
  - Another vehicle's smart key is being operated close to your vehicle.
- The detecting range may decrease or increase when :
  - One side of the vehicle is raised to replace a tire or to inspect the vehicle.
  - The vehicle is parked on a slope or unpaved road, etc.

Windows

Front / Rear

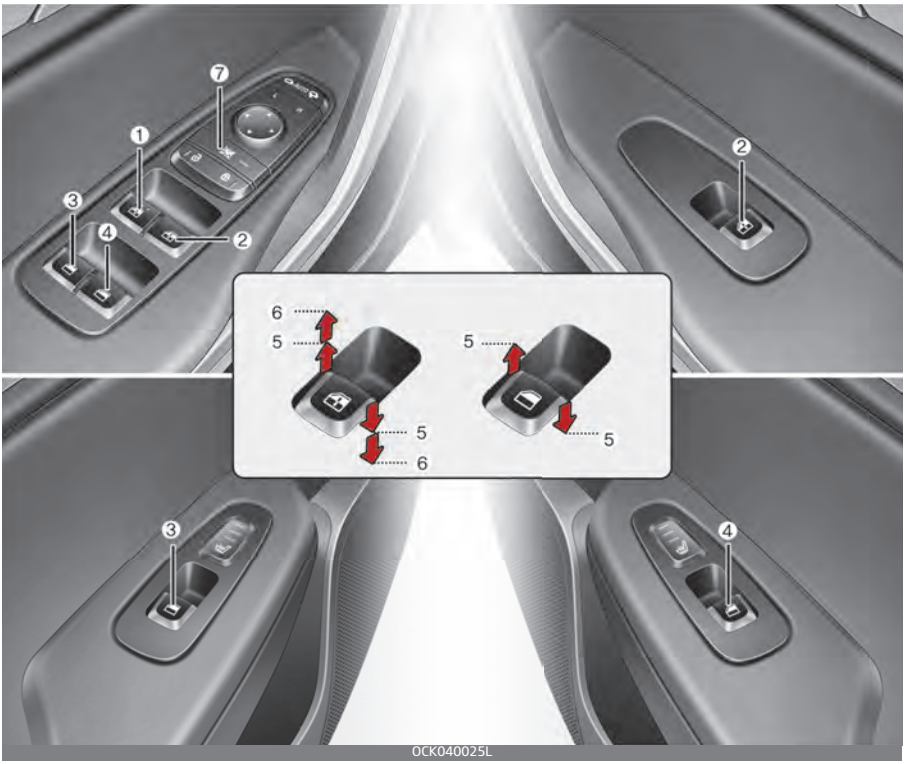

1. Driver’s door power window switch
2. Front passenger’s door power window switch
3. Rear door (left) power window switch
4. Rear door (right) power window switch
5. Window opening and closing
6. Automatic power window up/down (Driver's and Passenger's window)
7. Power window lock button

In cold and wet climates, power windows may not work properly due to freezing conditions.

Power windows

The ENGINE START/STOP Button must be in the ON position for power windows to operate.

Each door has a power window switch that controls the door's window. The driver has a power window lock button which can block the operation of rear passenger windows.

The power windows can be operated for approximately 30 seconds after the ENGINE START/STOP button is set to the ACC or OFF position.

However, if the front doors are opened, the power windows cannot be operated even within the 30 seconds period.

The driver's door has a master power window switch that controls all the windows in the vehicle.

If the window cannot be closed because it is blocked by objects, remove the objects and close the window.

NOTICE

While driving with the rear windows down or with the sunroof (if equipped) in an open (or partially open) position, your vehicle may demonstrate a wind buffeting or pulsation noise. This noise is a normal occurrence and can be reduced or eliminated by taking the following actions. If the noise occurs with one or both of the rear windows down, partially lower both front windows approximately one inch (2.5 cm). If you experience the noise with the sunroof open, slightly reduce the size of the sunroof opening.

CAUTION

Do not install any accessories in the vehicle that extend into the open window area. Such objects will impact the proper function of the Automatic reversal "jam protection" feature described in this chapter.

Window opening and closing

OJA040474

To open or close a window, press down or pull up the front portion of the corresponding switch to the first detent position (5).

⚠ WARNING

Power Windows

Do not extend your face or arms outside of the window opening while the vehicle is in motion. Doing so could result in significant injury.

Auto up/down window (Driver's and Front Passenger's side)

OJA040475

Pressing or pulling up the power window switch momentarily to the second detent position (6) completely lowers or raises the window even when the switch is released. To stop the window at the desired position while the window is in operation, pull up or press down and release the switch.

If the power window does not operate normally, the automatic power window system must be reset as follows:

1. Press the ENGINE START/STOP Button twice to the ON position.
2. Close the driver's and front passenger's window and continue pulling up the driver's power window switch for at least 1 second after the window is completely closed.

Automatic reversal (for Auto up/down window)

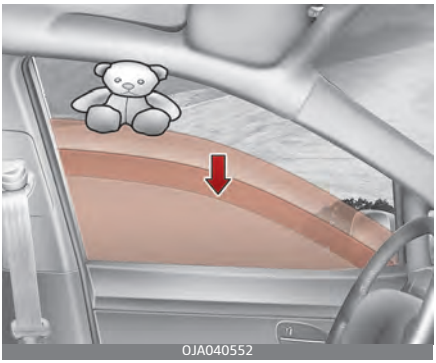

OJA040552

If the upward movement of the window is blocked by an object or part of the body, the window will detect the resistance and will stop upward movement. The window will then lower approximately 11.8 in. (30 cm) to allow the object to be cleared.
The distance may vary based on the size or position of the window. If the window detects the resistance while the power window switch is pulled up continuously, the window will stop upward movement then lower approximately 1 in. (2.5 cm).
If the power window switch is pulled up continuously again within 5 seconds after the window is lowered by the automatic window reversal feature, the automatic window reversal

will not operate.
The automatic reverse feature for the driver's and front passenger's window is only active when the "auto up" feature is used by fully pulling up the switch. The automatic reverse feature will not operate if the window is raised using the half-way position on the power window switch.

WARNING

Always check for obstructions before raising any window to avoid injuries or vehicle damage. If an object less than 0.16 in. (4 mm) in diameter is caught between the window glass and the upper window channel, the automatic reverse window may not detect the resistance and will not stop and reverse direction.

WARNING

The automatic reverse feature doesn't activate while resetting power window system. Make sure body parts or other objects are safely out of the way before closing the windows to avoid injuries or vehicle damage.

WARNING

Do not install any accessories in the vehicle that extend into the open window area. Such objects could prevent the automatic reverse feature from functioning.

Power window lock button

- The driver can disable the power window switches on the passenger doors by pressing the power window lock button located on the driver's door to the LOCK position (pressed).
- **When the power window lock button is pressed :**
  - The driver's master control can operate all the power windows.
  - The front passenger's control can operate the front passenger's power window.
  - The rear passenger's control cannot operate the rear passenger's power window.

⚠ CAUTION

Opening /closing Window

To prevent possible damage to the power window system, do not open or close two windows or more at the same time. This will also ensure the longevity of the fuse.

Always double check to make sure all arms, hands, head and other obstructions are safely out of the way before closing a window.

⚠ WARNING

Power windows

Do not allow children to play with the power windows. Keep the power window lock button (on the driver's door) in the LOCK (pressed) position.

Remote window opening system (if equipped)

OCK040678N

You can still control the windows movement with the engine turned off.

- Press the door unlock button (1) for more than 3 seconds. The window moves down after the doors are unlocked, as long as you press the door unlock button (1). The window movement stops, when you release the door unlock button (1).

⚠ CAUTION

- The remote window opening function may abruptly stop, when you move away from your vehicle during operation. Stay in close proximity from your vehicle, while monitoring the window movement.
- Be careful when using the remote window opening function, as the doors will be unlocked.

Hood

Opening the hood

1. Pull the release lever to unlatch the hood. The hood should pop open slightly.

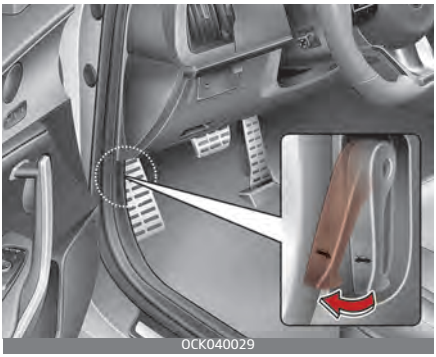
OCK040029

Only open the hood with the vehicle on a flat surface, engine is turned off, shift lever placed in P (Park) position and setting the parking brake.

2. Go to the front of the vehicle, raise the hood slightly, push the secondary latch (1) left side of the hood center and lift the hood (2).

OCK040030

3. Raise the hood. It will completely rise by itself after it has been raised about halfway.

Hood open warning

OCK040477

The warning message will appear on the LCD display when hood is open.

The warning chime will operate when the vehicle is being driven at or above 2 mph (3 km/h) with the hood open.

Closing the hood

1. Before closing the hood, check the following:
   - All filler caps in engine compartment must be correctly installed.
   - Gloves, rags or any other combustible material must be removed from the engine compartment.
2. Lower the hood halfway (lifted approximately 12 inches (30 cm) from the closed position) and

push down to securely lock in place.

3. Check that the hood has engaged properly. If the hood can be raised slightly, it is not properly engaged.
   Open it again and close it with a little more force.

⚠ CAUTION

Hood obstruction

Before closing the hood, ensure that all obstructions are removed from the hood opening. Closing the hood with an obstruction present in the hood opening may result in property damage.

⚠ WARNING

Fire risk

Do not leave gloves, rags or any other combustible material in the engine compartment. Doing so may cause a heat-induced fire.

⚠ WARNING

Unsecured engine hood

Always double check to be sure that the hood is firmly latched before driving away. If it is not latched, the hood could fly open while the vehicle is being driven, causing a total loss of visibility, which might result in an accident.

Fuel filler door

Opening the fuel filler door

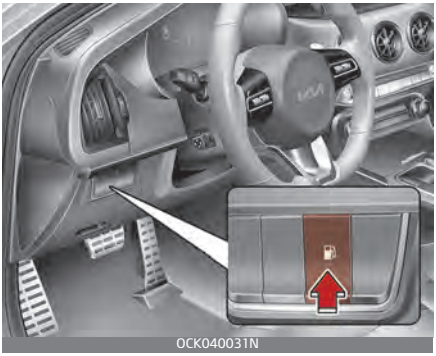

The fuel filler door must be opened from inside the vehicle by pressing the fuel filler door opener button.

If the fuel filler door does not open because ice has formed around it, tap lightly or push on the door to break the ice and release the door. Do not pry on the door. If necessary, spray around the door with an approved de-icer fluid (do not use radiator antifreeze) or move the vehicle to a warm place and allow the ice to melt.

1. Stop the engine.
2. To open the fuel filler door, push the fuel filler door opener button.
3. Pull open the fuel filler door (1).

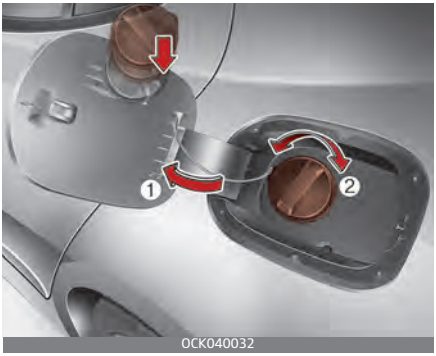

OCK040032

4. To remove the cap, turn the fuel filler cap (2) counterclockwise.
5. Refuel as needed.

⚠ CAUTION

Before refueling, be sure to check what type of fuel is used for your vehicle.

If you put diesel fuel into a gasoline-powered vehicle or gasoline into a diesel-powered vehicle, it may affect the fuel system and cause serious damage to the vehicle.

Closing the fuel filler door

1. To install the cap, turn it clockwise until it "clicks" once. This indicates that the cap is securely tightened.
2. Close the fuel filler door and push it in lightly making sure that it is securely closed.

✻ NOTICE

There may be an intermittent noise near the refueling hole while the engine is idling if the fuel cap is not closed securely. This occurs normally with the OBD system.

✻ NOTICE

When refueling on unlevel ground, the fuel gauge may not point to the F position.

It is not a malfunction. If you move your vehicle to a level ground, the fuel gauge will move to the full position.

Emergency fuel filler door release

OCK040033

If the fuel filler door does not open using the fuel filler door opener button, you can open it manually by pulling the handle outward slightly.

⚠ CAUTION

Do not pull the handle excessively, otherwise the luggage area trim or release handle may be damaged.

⚠ WARNING

Refueling

Always remove the fuel cap carefully and slowly. If the cap is venting fuel or if you hear a hissing sound, wait until the condition stops before completely removing the cap. If pressurized fuel sprays out, it can cover your clothes or skin and subject you to the risk of fire and burns.

Always check that the fuel cap is installed securely to prevent fuel spillage in the event of an accident.

⚠ WARNING

Fire/explosion risk

Read and follow all warnings posted at the gas station facility. Failure to follow all warnings may result in severe personal injury, severe burns or death due to fire or explosion.

⚠ WARNING

Static electricity

- Before touching the fuel nozzle, you should eliminate potentially dangerous static electricity discharge by touching another metal part of the vehicle, a safe distance away from the fuel filler neck, nozzle, or other gas source.
- Do not get back into a vehicle once you have begun refueling since you can generate static electricity by touching, rubbing or sliding against any item or fabric (polyester, satin, nylon, etc.) capable of producing static electricity.
  Static electricity discharge can ignite fuel vapors resulting in rapid burning. If you must reenter the vehicle, you should once again eliminate potentially dangerous static electricity discharge by touching a metal part of the vehicle, away from the fuel filler neck, nozzle or other gasoline source.

⚠ WARNING

Portable fuel container

When using an approved portable fuel container, be sure to place the container on the ground prior to refueling. Static electricity discharge from the container can ignite fuel vapors causing a fire. Once refueling has begun, contact with the vehicle should be maintained until the filling is complete. Use only approved portable plastic fuel containers designed to carry and store gasoline.

⚠ WARNING

Cell phone fires

Do not use cellular phones while refueling. Electric current and/or electronic interference from cellular phones can potentially ignite fuel vapors causing a fire.

⚠ WARNING

Smoking

DO NOT use matches or a lighter and DO NOT SMOKE or leave a lit cigarette in your vehicle while at a gas station especially during refueling. Automotive fuel is highly flammable and can, when ignited, result in fire.

⚠ WARNING

Refueling & Vehicle fires

When refueling, always shut the engine off. Sparks produced by electrical components related to the engine can ignite fuel vapors causing a fire. Once refueling is complete, check to make sure the filler cap and filler door are securely closed, before starting the engine.

Make sure to refuel your vehicle according to the "Fuel requirements" suggested in chapter 1.

If the fuel filler cap requires replacement, use only a genuine Kia cap or the equivalent specified for your vehicle. An incorrect fuel filler cap can result in a serious malfunction of the fuel system or emission control system.

⚠ CAUTION

Exterior paint

Do not spill fuel on the exterior surfaces of the vehicle. Any type of fuel spilled on painted surfaces may damage the paint.

Wide sunroof (if equipped)

OCK040034N

You can operate the sunroof with the sunroof switch in the ignition ON position.

The sunroof can be operated for approximately 30 seconds after the ENGINE START/STOP button is in the OFF position.

However, if the front doors are opened, the sunroof cannot be operated even within the 30 seconds.

⚠ CAUTION

- The sunroof must be operated with the stationary vehicle. Never adjust the sunroof or blind while driving. This could result in loss of control and an accident
- You should take the key when you leave the car for a while in the ignition OFF position.
  Do not allow children to operate the sunroof.
- Do not sit on or lifting heavy objects the top of the vehicle. It may cause vehicle damage.
- Do not operate the sunroof with a roof rack or loaded with goods on a roof rack.

Blind

OCK040058N

You can operate blind to block Sunlight.

- Press the sunroof switch backward to the 1st detent position and blind slide open.
  Press the switch forward to the 1st detent position and blind slide close (if the glass is opened, glass slide close first).
  To stop the sunroof movement at any point, push the switch momentarily.

⚠ CAUTION

Do not pull or push the blind by hand. It can cause malfunction by impacting the blind.

✻ NOTICE

Wrinkles formed on the blind as material characteristic are normal.

Tilt open/close

- Press the sunroof switch upward and glass tilt open (if the blind is closed, blind slide open first).
  Press the switch forward and glass tilt close.
  To stop the sunroof movement at any point, push the switch In any direction.

Slide open/close

- Press the sunroof switch backward and glass slide open(if the blind is closed, blind slide open first).
  Press the switch forward and glass slide close.
- Press the sunroof switch to the 1st detent position and operate manually.
  Press the switch to the 2nd detent position and operate automatically.
  To stop the sunroof movement at any point, push the switch In any direction.

Automatic reversal

If a constant force is detected while the sunroof is closing.

It automatically stops working and opens to a specific position.

The auto reverse function may not work if a thin or soft object is stuck or it is closed manually.

⚠ CAUTION

- Always operate the sunroof after checking that there are no body parts such as hands or head. Injuries may occur when the body is stuck.
- Do not intentionally use your body to test automatic reversal. It can be reopened, but there is a risk of body parts getting stuck.

⚠ CAUTION

- Do not continue to press the sunroof switch after the sunroof is fully opened, closed, or tilted. Damage to the motors could occur.
- Continuous operations such as slide open/close, tilt open/close, etc. can cause motors or sunroof system to fail.
- Remove accumulated dust on the sunroof rail part regularly.
- Using the sunroof for a long time can make a noise caused by dust in the sunroof and the body. Open the sunroof and remove dust regularly using a clean cloth.
- If you try to open the sunroof when the temperature is below freezing or when the sunroof is covered with snow or ice, it may not work or sunroof could be damaged.
- Drive the car after the vehicle is washed or in a rainstorm, water can enter the inside.
- Do not extend any luggage outside the sunroof while driving. It may cause vehicle damage by a sudden stop.

⚠ CAUTION

Do not extend the face, neck, arms or body outside the sunroof while driving.

It may cause Injuries by a sudden stop.

Resetting the sunroof

You must reset your sunroof system as follows

- When the battery power connected to the sunroof motor is cut off or discharged or the fuse is replaced.
- If the sunroof does not operate normally.

1. Close the glass and blind completely with the sunroof switch in the ignition ON position.
2. Release the switch when glass and blind is completely closed.
3. Press the switch forward until the glass or blind slightly moves. Release the switch.
4. Press the switch forward while glass or blind slides open/close. Then, release the switch.
   (Do not release the switch until the slide open/close operation is complete. If you release the switch on the way, please proceed again from the beginning)

NOTICE

If the Resetting the Sunroof procedure is not correctly followed, the sunroof may not operate properly.

Sunroof open warning

OCK040500

If the driver turns off the engine when the sunroof is not fully closed, the warning chime will sound for a few seconds and the above warning illustration will appear on the LCD display.

Close the sunroof completely when leaving your vehicle

CAUTION

Make sure the sunroof is fully closed when leaving your vehicle. If the sunroof is opened, rain or snow may leak through the sunroof and wet the interior as well as allow theft to occur.

Steering wheel

Electric Power Steering (EPS)

The power steering uses a motor to assist you in steering the vehicle. If the engine is off or if the power steering system becomes inoperative, the vehicle may still be steered, but it will require increased steering effort.

The EPS is controlled by a power steering control unit which senses the steering wheel torque and vehicle speed to command the motor.

The steering becomes heavier as the vehicle's speed increases and becomes lighter as the vehicle's speed decreases for optimum steering control.

Should you notice any change in the effort required to steer during normal vehicle operation, have the power steering checked by an authorized Kia dealer.

- When the vehicle is stationary, and the steering wheel is turned all the way to the left or right continuously, the steering wheel becomes harder to turn. The power assist is limited to protect the motor from overheating. As time passes, the steering wheel will return to its normal condition.

✻ NOTICE

The following symptoms may occur during normal vehicle operation:

- The EPS warning light does not illuminate.
- The steering gets heavy immediately pressing the ENGINE START/STOP button to the ON position. This happens as the system performs the EPS system diagnostics. When the diagnostics are completed, the steering wheel will return to its normal condition.
- A click noise may be heard from the EPS relay after the ENGINE START/STOP button is turned to the ON or OFF position.
- A motor noise may be heard when the vehicle is at a stop or at a low driving speed.
- If the Electric Power Steering System does not operate normally, the warning light will illuminate on the instrument cluster. The power steering system will not operate and steering effort can increase. Take your vehicle to an authorized Kia dealer and have the vehicle checked as soon as possible.
- When the charging system warning light comes on due to low voltage (when the alternator or battery do not operate normally or malfunction), the steering wheel may require increased steering effort.

- The steering effort increase if the steering wheel is rotated continuously when the vehicle is not in motion. However, after a few minutes, it will return to its normal conditions.
- When operate the steering wheel in low temperature, abnormal noise could occur. If temperature rises, the noise will disappear. This is a normal condition.

Tilt and telescopic steering

Tilt and telescopic steering allows you to adjust the steering wheel before you drive.You can also raise it to give your legs more room when you exit and enter the vehicle.

The steering wheel should be positioned so that it is comfortable for you to drive, while permitting you to see the instrument panel warning lights and gauges.

⚠ WARNING

Steering wheel adjustment

Never adjust the angle and height of the steering wheel while driving. You may lose steering control.

Manual type

To change the steering wheel angle, pull down the lock-release lever (1), adjust the steering wheel to the desired angle (2) and height (3) then pull up the lock-release lever to lock the steering wheel in place. Be sure to adjust the steering wheel to the desired position before driving.

✻ NOTICE

After adjustment, sometimes the lock release lever may not lock the steering wheel. It is not a malfunction. This occurs when two gears are not engaged correctly. In this case, adjust the steering wheel again and then lock the steering wheel.

Electric type (if equipped)

Adjust the steering wheel angle (2) and position (3) with the switch (1) on the steering column. Move the steering wheel, so it points toward your chest, not toward your face. Make sure you can see the instrument panel warning lights and gauges.

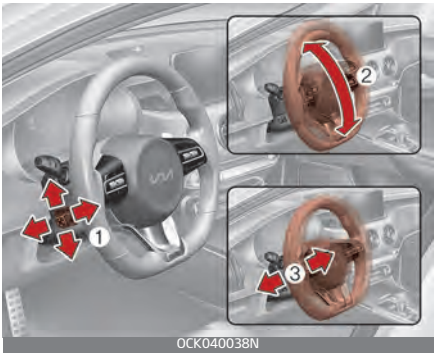

OCK040038N

After adjusting, push the steering wheel both up and down to be certain it is locked in position. Always adjust the position of the steering wheel before driving.

NOTICE

To prevent discharge of the battery, do not operate when the engine is stopped.

Heated steering wheel (if equipped)

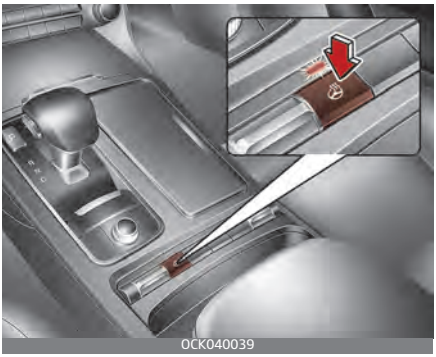
OCK040039

With the ENGINE START/STOP Button in the ON position, pressing the heated steering wheel button warms the steering wheel. The indicator on the button will illuminate.

To turn the heated steering wheel off, press the button once again. The indicator on the button will turn off.

WARNING

If the steering wheel becomes too warm, turn the system off. The heated steering wheel may cause burns even at low temperatures, especially if used for long periods of time.

NOTICE

The heated steering wheel will turn off automatically approximately 30 minutes after the heated steering wheel is turned on.

Horn

OCK040052N

To sound the horn, press the horn symbols on your steering wheel. Check the horn regularly to be sure it operates properly.

NOTICE

To sound the horn, press the area indicated by the horn symbol on your steering wheel (see illustration). The horn will operate only when this area is pressed.

Mirrors

Inside rearview mirror

Adjust the rearview mirror so that the center view through the rear window is seen. Make this adjustment before you start driving.

Do not place objects in the rear seat or cargo area which would interfere with your vision through the rear window.

WARNING

Mirror adjustment

Do not adjust the rearview mirror while the vehicle is moving. This could result in loss of control.

WARNING

Do not modify the inside mirror and don't install a wide mirror. It could result in injury during an accident or deployment of the air bag.

Electrochromic mirror (ECM) (if equipped)

The electric rearview mirror automatically controls the glare from the headlights of the vehicles behind you in nighttime or low light driving conditions.The sensor mounted in the mirror senses the light level around the vehicle, and automatically controls the headlight glare from the vehicles behind you.

Whenever the gear is shifted into reverse (R), the mirror will automatically go to the brightest setting in order to improve the driver's view behind the vehicle.

⚠ CAUTION

When cleaning the mirror, use a paper towel or similar material dampened with glass cleaner. Do not spray glass cleaner directly on the mirror. It may cause the liquid cleaner to enter the mirror housing.

Electrochromic mirror (ECM) with HomeLink® system (if equipped)

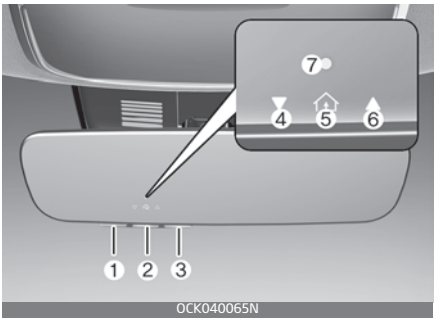

1. HomeLink Channel 1
2. HomeLink Channel 2
3. HomeLink Channel 3
4. Garage Door Opener Status Indicator: Closing or Closed
5. HomeLink Operation Indicator
6. Garage Door Opener Status Indicator: Opening or Opened
7. HomeLink User Interface Indicator

Your vehicle may be equipped with a Gentex Automatic-Dimming Mirror with an Integrated HomeLink® Wireless Control System.

During nighttime driving, this feature will automatically detect and reduce rearview mirror glare. The HomeLink® Universal Transceiver allows you to activate your garage door(s), electric gate, home lighting, etc.

Automatic-Dimming Night Vision Safety™ (NVS®) Mirror (if equipped)

The NVS® Mirror automatically reduces glare by monitoring light levels in the front and the rear of the vehicle. Any object that obstructs either light sensor will degrade the automatic dimming control feature.

For more information regarding NVS® mirrors and other applications, please refer to the Gentex website: www.gentex.com

Your mirror will automatically dim upon detecting glare from the vehicles traveling behind you.

The mirror defaults to the ON position each time the vehicle is started.

Integrated HomeLink® Wireless Control System

The HomeLink® Wireless Control System provides a convenient way to replace up to three handheld radio-frequency (RF) transmitters used to activate compatible devices such as gate operators, garage door openers, entry door locks, security systems, and home lighting.

NOTICE

Considering the Home Security when the vehicle is parked outside the garage, the HomeLink will ONLY work when the ENGINE START/STOP button is in ACC position or ON position.

CAUTION

Before programming HomeLink to a garage door opener or gate operator, make sure that people and objects are out of the way of the device to prevent potential harm or damage. When programming a garage door opener, it is advised to park outside of the garage.

Do not use HomeLink with any garage door opener that lacks safety stop and reverse features as required by U.S. federal safety standards (this includes any garage door opener model manufactured before April 1, 1982). A garage door that cannot detect an object signaling the door to stop and reverse – does not meet current U.S. federal safety standards. For more information, contact HomeLink at **www.homelink.com**, or call HomeLink customer support at **1-800-355-3515**.

It is also recommended that a new battery be replaced in the handheld transmitter of the device being trained to HomeLink for quicker training and accurate transmission of the radio frequency.

1. Programming HomeLink®

The following steps show how to program HomeLink. If you have any questions or are having difficulty programming your HomeLink buttons, refer to the HomeLink website or call the HomeLink customer support toll-free number. Do this, before going back to the dealer who sold you the car.

- Visit the HomeLink website at: www.homelink.com. Then at the top of the page, choose your vehicle make. Then watch the You Tube video, and/or access additional website information.
- If you choose to access the website via your cell phone, scan the QR code.
- Or, call HomeLink customer support at **1-800-355-3515** (Please have the vehicle make/model AND the opener device make/model readily available.)

1) Programming Preparation

1. When programming a garage door opener, it is advised to park the vehicle outside of the garage.
2. It is recommended that a new battery be placed in the hand-held transmitter of the device being programmed to HomeLink for quicker training and accurate transmission of the radio-frequency signal.
3. Place the ENGINE START/STOP button to the ACC (Accessory) position for programming of HomeLink.

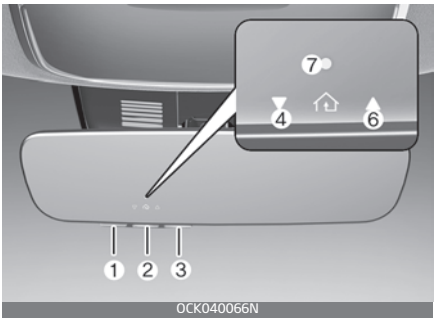

OCK040066N

2) Programming a New HomeLink® Button

1. Press and release the HomeLink button (1), (2) or (3), you would like to program. The HomeLink indicator light (7) will flash orange slowly (if not, perform the steps of "Erasing HomeLink Buttons" section, and start over).

OCK040068N

2. Position the garage door opener remote 1 - 3 inches (2 - 8 cm)

away from the HomeLink buttons.

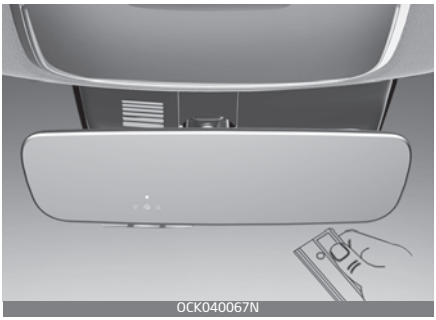
OCK040067N

3. While the HomeLink indicator light (7) is flashing orange, press and hold the hand-held remote button. Continue pressing the hand-held remote button until the HomeLink indicator light (7) light changes from orange to green. You ma"y now release the hand-held remote button.
4. Wait until your garage door comes to a complete stop, regardless of position, before proceeding to the next steps.
5. Press and release the HomeLink button you are programming and observe the indicator light.
   - If the indicator light remains solid green, your device should operate when the HomeLink button is pressed. At this point, if your device operates, programming is complete.
   - If the indicator light rapidly flashes green, firmly press, hold for two seconds and release the HomeLink button up to three times in a row slowly to complete the programming process. Do not press the HomeLink button rapidly. At this point if your device operates, programming is complete. If the device does not operate, continue with step 6.
6. At the garage door opener motor, (security gate motor, etc.) locate the "Learn", "Smart", "Set" or "Program" button. This can usually be found where the hanging antenna wire is attached to the motor-head unit (see the device's manual to identify this button). The name and color of the button may vary by manufacturer.

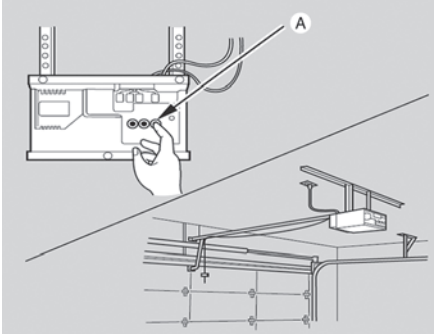

ODL3A040504

* A ladder and/or second person may simplify the following steps.

7. Firmly press and release the "Learn", "Smart", "Set" or "Program"" button. You now have up to 30 seconds in which to complete the next step.
8. Return to the vehicle and firmly press, hold for two seconds and release, the HomeLink button up to three times in a row slowly. Do not press the HomeLink button rapidly. As soon as you see the garage door start to move, stop pressing any buttons until a few seconds after the garage door has come to a complete stop, regardless of position. At this point programming is complete and your device should operate when the HomeLink button is pressed and released.

3) Two-Way Communication Programming (For select garage door openers)

If your garage door opener has the 'myQ' logo on its side, your opener likely has Two-Way Communication capability. HomeLink has the capability to establish Two-Way Communication with your garage door opener. HomeLink can receive and display "closing" or "opening" status messages from compatible garage door openers. At any time, HomeLink can also recall and display the last recorded status communicated by the garage door opener to indicate your garage door being "closed" or "opened".

To check if your garage door opener is compatible with this feature, refer to www.homelink.com/compatible/Two-way-Communication. If your garage door opener has this functionality, AND the Two-Way Communication indicators (4), (6) in the mirror appear while the garage door is opening/closing, then no further steps are needed. Two-Way Communication Programming is already complete. However, if your garage door opener has this functionality, AND the Two-Way Communication indicators (4), (6) in the mirror DO NOT appear while the garage door is opening/closing, use the following instructions to enable this functionality.

1. In your vehicle, press and hold the programmed HomeLink button for 2 seconds, then release. Confirm that the garage door is moving. AFTER it stops, you will have one minute to complete the following steps:
   * A ladder and/or second person may simplify the following steps.
2. On your garage door opener in your garage, locate the "Learn" button (usually near where the hanging antenna wire is attached to the garage door opener). If there is difficulty locating this

button, reference the device's owner's manual.
3. Press and release the "Learn" button.
4. A light on your garage door opener may flash, and your Two-Way Communication indicators (4), (6) in your vehicle may flash, confirming completion of the process.
5. Return to the vehicle and firmly press and release the programmed HomeLink button to activate your garage door. The Two-Way Communication indicators (4), (6) flash in orange when the door is moving. Do not make any additional button presses until AFTER the garage door has come to a complete stop.
6. Your Two-Way Communication programming is now complete.

NOTICE

If your garage door opener has Two-Way Communication functionality, it is possible for HomeLink to stop functioning the garage door shortly after initial programming, IF the Two-Way Communication Programming wasn't properly completed. This usually happens after the first 10 times a programmed HomeLink button is pressed. If you experience this, completing the "Programming a New HomeLink Button" and "Two-Way Communication Programming" will restore door operation.

4) Canadian Programming

Canadian radio-frequency laws require transmitter remote signals to "time-out" (or quit) after a couple seconds of transmission, which may not be long enough for HomeLink to pick up the signal during programming.

If you live in Canada or you are having difficulties programming a gate operator or garage door opener by using the programming procedures, replace "Programming a New HomeLink Button" step 3 with the following:

While the HomeLink indicator light (7) is flashing orange, press and release ("cycle") your device's hand-held remote every two seconds until the HomeLink indicator light (7) changes from orange to green. You may now release the hand-held remote button. Then proceed with "Programming a New HomeLink Button" step 4.

2. Operating HomeLink®

1) Operating HomeLink®

1. Press and release the desired programmed HomeLink button (1, 2 or 3).

OCK040068N

✻ NOTICE

The HomeLink indicator (7) should light green, solid or flashing, and your programmed device should operate.

If your device does not operate, the HomeLink programming was not successful, and you'll need to reprogram the button.

2) Two-Way Communication Display Behavior

1. Press and release one of the programmed HomeLink buttons (1, 2 or 3)

OCK040070N

2. The indicator (4) and (6) operates as below, if your garage door opener has Two-Way Communication functionality.

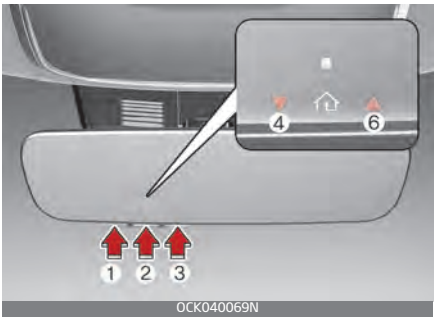

OCK040069N

- If the indicator (4) flashes in Orange, it indicates that the garage door is "Closing".
- The indicator (4) turns solid green once the garage door has closed.
- If the indicator (6) flashes in Orange, it indicates that the garage door is "Opening".
- The indicator (6) turns solid green once the garage door has fully opened.
- If the indicator (4) or (6) does not turn to green, it indicates that the last status of garage door was not received properly. The HomeLink mirror tries to receive the last known status of the garage door for a few seconds.

3) Recalling Garage Door Status

HomeLink mirror with Two-Way Communication provides a way to view the last stored message from the garage door opener. In order to

recall the last known status of the last activated device, press the buttons "1 and 2" OR "2 and 3" simultaneously.

- If the indicator (4) appears solid Green, it indicates that the last activated device was "closed" properly.
- If the indicator (6) appears solid Green, it indicates that the last activated device was "open" properly.

3. Erasing HomeLink® Buttons

1) Erasing and Reprogramming a Single HomeLink® Button:

1. Press and hold the desired HomeLink button you want to re-program. DO NOT release the button.
2. The HomeLink indicator light (7) will illuminate solid green. Release the button as soon as the HomeLink indicator light (7) begins to flash orange, usually about 20 seconds.
3. Proceed with the steps in the "Programming a New HomeLink Button" section.

✻ NOTICE

If you do not complete the re-programming of a new device to the button, it will revert to the previously stored programming

2) The following instructions will erase ALL HomeLink® programming from ALL buttons:

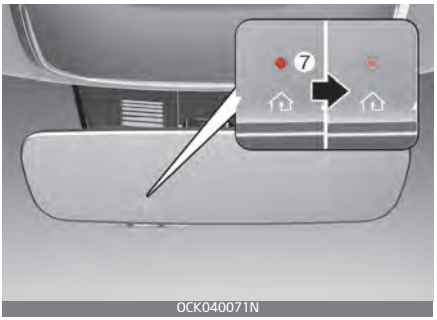

OCK040071N

1. Press and hold the buttons (1) and (3) simultaneously
2. The HomeLink indicator light (7) will illuminate solid Orange for about 10 seconds
3. Release the buttons once the HomeLink indicator light (7) changes to Green and flashes rapidly
4. Now all three HomeLink buttons (1), (2) and (3) are cleared of any programming

Information

HomeLink and the HomeLink House logo are registered trademarks of Gentex Corporation.

The myQ logo is a registered trademark of The Chamberlain Group, Inc

FCC (USA) and ISED (Canada)

This device complies with FCC rules part 15 and Innovation, Science, and Economic Development Canada

RSS-210. Operation is subject to the following two conditions: (1) This device may not cause harmful interference, and (2) This device must accept any interference that may be received including interference that may cause undesired operation. WARNING: The transmitter has been tested and complies with FCC and ISED rules. Changes or modifications not expressly approved by the party responsible for compliance could void the user's authority to operate the device.

This equipment complies with FCC and ISED radiation exposure limits set forth for an uncontrolled environment. End Users must follow the specific operating instructions for satisfying RF exposure compliance. This transmitter must be at least 20 cm from the user and must not be co-located or operating in conjunction with any other antenna or transmitter.

FCC (États-Unis) et ISED (Canada)

Cet appareil est conforme aux règlements de la FCC, section 15, et au CNR-210 d'Innovation, Sciences et Développement économique Canada. Le fonctionnement est assujetti aux deux conditions suivantes: (1) cet appareil ne doit pas causer d'interférences nuisibles et (2) cet appareil doit accepter toute interférence reçue, y compris celle qui pourrait entraîner un dysfonctionnement. MISE EN GARDE: L'émetteur a subi des tests et est conforme aux règlements de la FCC et d'ISDE. Les changements ou modifications non approuvés explicitement par la partie responsable de la conformité pourraient rendre caduque l'autorisation de l'utilisateur de se servir du dispositif.

Cet appareil est conforme aux limites d'exposition aux radiations de la FCC et d'ISDE établies pour un environnement non contrôlé. Les utilisateurs finaux doivent respecter les instructions d'utilisation spécifiques pour satisfaire aux exigences de conformité aux expositions de RF. L'émetteur doit se trouver à 20 cm au minimum de l'utilisateur et ne doit pas être situé au même endroit que tout autre émetteur ou antenne ni fonctionner avec un autre émetteur ou antenne.

Méjico

La operación de este equipo está sujeta a las siguientes dos condiciones: (1) es posible que este equipo o dispositivo pueda no causar interferencia dañina, y (2) este dispositivo o dispositivos deben aceptar cualquier interferencia, que incluye la interferencia que puede causar su operación no deseada.

HomeLink 5 Programing Flow Chart

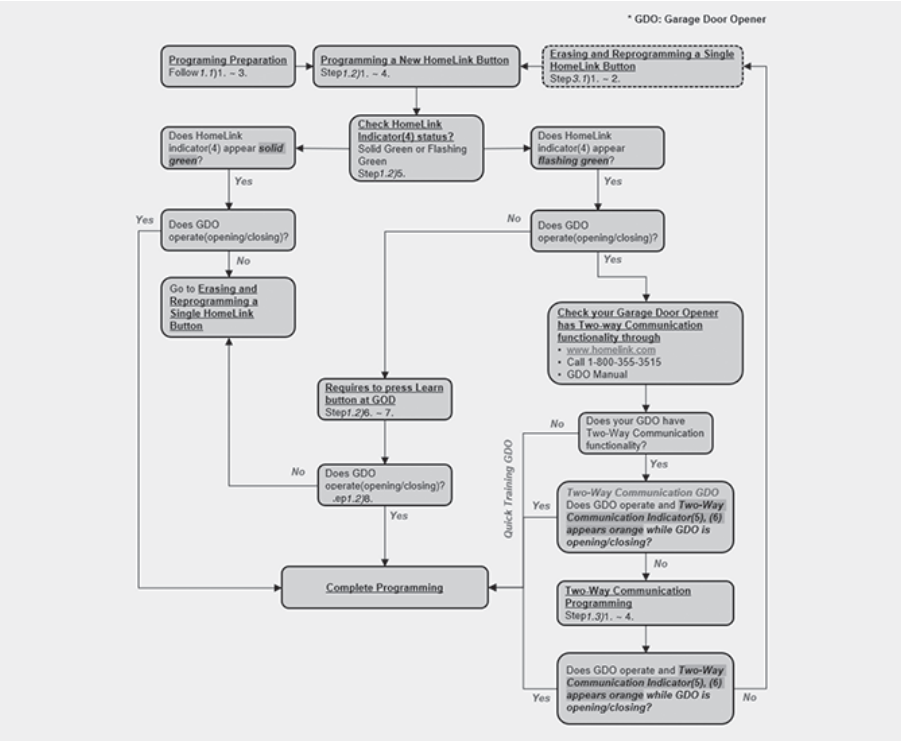

Outside rearview mirror

Be sure to adjust the mirror angles before driving.

Your vehicle is equipped with both left-hand and right-hand outside rearview mirrors. The mirrors can be adjusted remotely with the remote switch. The mirror heads can be folded back to prevent damage during an automatic vehicle wash or when passing through a narrow street.

The right outside rearview mirror is convex. Objects seen in the mirror are closer than they appear.

Use your interior rearview mirror or direct observation to determine the actual distance of following vehicles when changing lanes.

⚠ CAUTION

Rearview mirror

Do not scrape ice off the mirror face; this may damage the surface of the glass. If ice should restrict the movement of the mirror, do not force the mirror for adjustment. To remove ice, use a deicer spray, a sponge or soft cloth with very warm water.

If the mirror is jammed with ice, do not adjust the mirror by force. Use an approved spray de-icer (not radiator antifreeze) to release the frozen mechanism or move the vehicle to a warm place and allow the ice to melt.

⚠ WARNING

Mirror adjustment

Do not adjust or fold the outside rearview mirrors while the vehicle is moving. This could result in loss of control.

Adjusting outside rearview mirror

The electric remote control mirror switch allows you to adjust the position of the left and right outside rearview mirrors. To adjust the position of either mirror, press the R or L button (1) to select the right side mirror or the left side mirror, then press a corresponding point (▲) (2) on the mirror adjustment control to position the selected mirror up, down, left or right.

After adjustment, press the R or L button again to prevent the inadvertent adjustment.

⚠ CAUTION

Outside mirror

- The mirrors stop moving when they reach the maximum adjusting angles, but the motor continues to operate while the switch is pressed.
  Do not press the switch longer than necessary, the motor may be damaged.
- Do not attempt to adjust the outside rearview mirror by hand. Doing so may damage the parts.
- When the mirror control, press exactly "▲" (2) marking area. Otherwise, the mirror will move to unintended direction or malfunction.

Reverse parking aid function (if equipped)

OCK040045L

While the vehicle is moving in reverse, the outside rearview mirror(s) will tilt downward to aid reverse parking. According to the position of the outside rearview mirror switch, the outside rearview mirror(s) will operate as follows:

L/R : When the remote control outside rearview mirror switch is selected to the L (left) or R (right) position, both outside rearview mirrors will tilt downward.

Neutral: When the remote control outside rearview mirror switch is placed in the middle position, the outside rearview mirrors will not operate while the vehicle is moving rearward.

The outside rearview mirrors will automatically revert to their original positions under the following conditions:

1. The ENGINE START/STOP button is in the OFF position.
2. Shift lever is moved to any position except R (Reverse).
3. Remote control outside rearview mirror switch is placed in the middle position.

⚠ CAUTION

If outside rearview mirror is positioned at the outermost (left/right/bottom), the automatic mirror con-

trol function may not properly work while vehicle move backward.

Folding the outside rearview mirror

Electric type

The outside rearview mirror can be folded or unfolded by pressing the switch as below.

Left (1): The mirror will unfold.

Right (2): The mirror will fold.

Center (AUTO, 3) :

The mirror will fold or unfold automatically as follows:

- The mirror will fold or unfold when the door is locked or unlocked by the smart key.
- The mirror will fold or unfold when the door is locked or unlocked by the button on the outside door handle.
- The mirror will unfold when you approach the vehicle (all doors closed and locked) with a smart key in possession.

⚠ CAUTION

Electric type outside rearview mirror

The electric type outside rearview mirror operates even though the ENGINE START/STOP button is in the OFF position. However, to prevent unnecessary battery discharge, do not adjust the mirrors longer than necessary while the engine is not running.

Do not fold the electric type outside rearview mirror by hand.This could cause motor failure.

Instrument cluster

Type A

OCK040100N

Type B

OCK040101N

1. Tachometer
2. Speedometer
3. Engine coolant temperature gauge
4. Fuel gauge
5. Warning and indicator lights
6. LCD display

* The actual cluster in the vehicle may differ from the illustration. For more details, refer to the "Gauges" on page 4-70.

Instrument cluster control

Adjusting Instrument Cluster Illumination

The brightness of the instrument panel illumination is changed by pressing the illumination control button (“+” or “–”) when the ENGINE START/STOP button is ON, or the taillights are turned on.

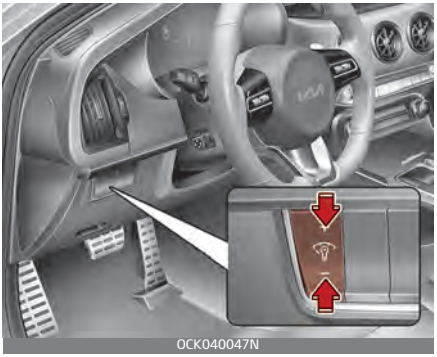

OCK040047N

OJA040571L

- If you hold the illumination control button (“+” or “–”), the brightness will be changed continuously.
- If the brightness reaches to the maximum or minimum level, an alarm will sound.

LCD display control

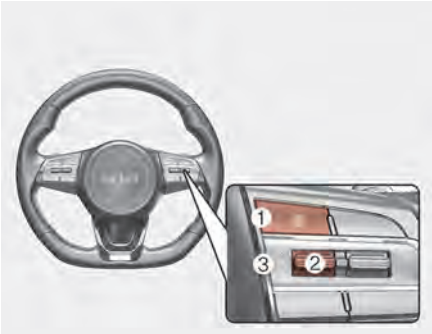

OCK040048N

The LCD display modes can be changed by using the control buttons on the steering wheel.

1. : MODE button for change the LCD MODES
2. ∧/∨: MODE scroll switch for select the items
3. OK : SET/RESET button for the set the items or reset the items

* For the LCD modes, refer to "LCD display" on page 4-75.

Gauges

Speedometer

OCK040107L

The speedometer indicates the speed of the vehicle and is calibrated in miles per hour (mph) and/or kilometers per hour (km/h).

Tachometer

OCK047103

The tachometer indicates the approximate number of engine revolutions per minute (rpm).

Use the tachometer to select the correct shift points and to prevent lugging and/or over-revving the engine.

⚠ CAUTION

Red zone

Do not operate the engine within the tachometer's RED ZONE. This may cause severe engine damage.

Engine Coolant Temperature Gauge

OCK047105

This gauge indicates the temperature of the engine coolant when the ENGINE START/STOP button is ON.

If the gauge pointer moves beyond the normal range area toward the “H” position, it indicates overheating that may damage the engine.

Do not continue driving with an overheated engine. If your vehicle overheats, refer to "If the engine overheats" on page 6-8.

⚠ WARNING

Hot radiator

Never remove the radiator cap when the engine is hot. The engine coolant is under pressure and could cause severe burns. Wait until the engine is cool before adding coolant to the reservoir.

Fuel Gauge

This gauge indicates the approximate amount of fuel remaining in the fuel tank.

✻ NOTICE

- The fuel tank capacity is given in chapter 8.
- The fuel gauge is supplemented by a low fuel warning light which will illuminate when the fuel tank is nearly empty.
- On inclines or curves, the fuel gauge pointer may fluctuate or the low fuel warning light may come on earlier than usual due to the movement of fuel in the tank.

✻ NOTICE

Fuel gauge

Running out of fuel can expose vehicle occupants to danger. You must stop and obtain additional fuel as soon as possible after the warning light comes on or when the gauge indicator comes close to the "E (Empty)" level.

⚠ CAUTION

Low fuel

Avoid driving with an extremely low fuel level. Running out of fuel could cause the engine to misfire damaging the catalytic converter.

✻ NOTICE

The fuel display may not be accurate if the vehicle is on an incline.

Odometer

Type A

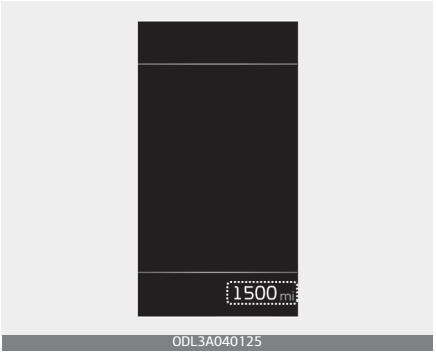

ODL3A040125

Type B

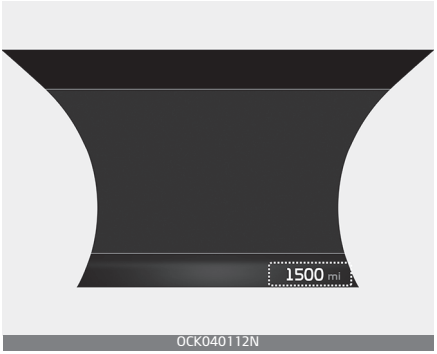

OCK040112N

The odometer Indicates the total distance that the vehicle has been driven and should be used to determine when periodic maintenance should be performed.

- Odometer range : 0 ~ 999999 miles or 0 ~ 1599999 kilometers.

Distance to empty

Type A

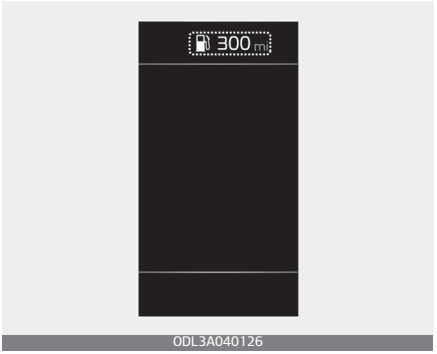

ODL3A040126

Type B

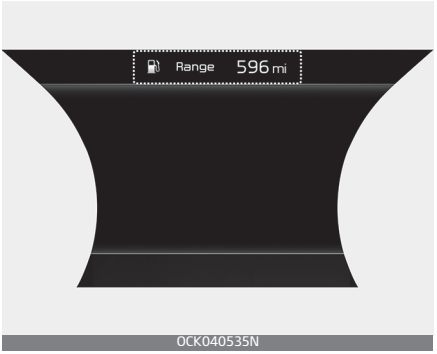

OCK040535N

- The distance to empty is the estimated distance the vehicle can be driven with the remaining fuel.
  – Distance range: 1 ~ 9,999 mi. or 1 ~ 9,999 km
- If the estimated distance is below 1 mi. (1 km), the trip computer will display "–––" as distance to empty.

CAUTION

- If the vehicle is not on level ground or the battery power has been interrupted, the distance to empty function may not operate correctly.
- The distance to empty may differ from the actual driving distance as it is an estimate of the available driving distance.
- The trip computer may not register additional fuel if less than 1.6 gallons (6 liters) of fuel are added to the vehicle.
- The distance to empty may vary significantly based on driving conditions, driving habits, and condition of the vehicle.

Outside Temperature Gauge

Type A

OCK040194N

Type B

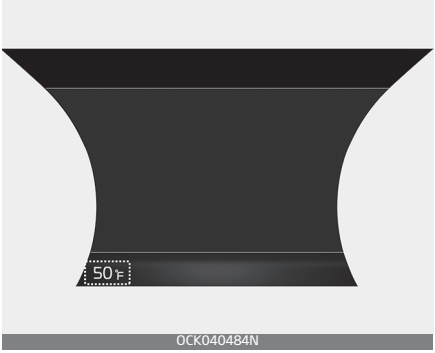

OCK040484N

This gauge indicates the current outside air temperatures by 1°F (1°C).

- Temperature range : -40°F ~ 140°F (-40°C ~ 60°C)

The outside temperature on the display may not change immediately like a general thermometer to prevent the driver from being distracted.

The temperature unit (from °C to °F or from °F to °C) can be changed by:

- User Settings mode in the Cluster (if equipped) : You can change the temperature unit in the “Other - Temperature unit”.
  * For more details, refer to "LCD display" on page 4-75.
- Settings menu in the Infotainment System screen (if equipped): You can change the temperature unit in the “Setup → General → Unit → Temperature Unit → °C/ °F”.

* For detailed information, scan the QR code in a separately supplied Car Infotainment System Quick Reference Guide.

- Climate control system : While pressing the OFF button, press the AUTO button for 3 seconds or more. The temperature unit of the instrument cluster and climate control system will change at once.

Transmission shift indicator

Automatic Transmission Shift Indicator

Type A

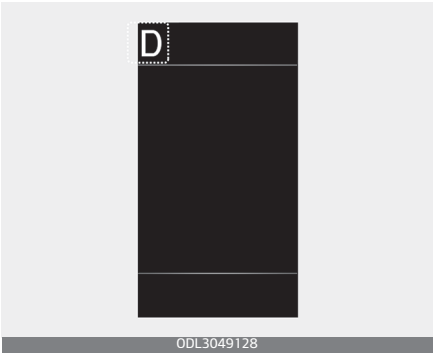

Type B

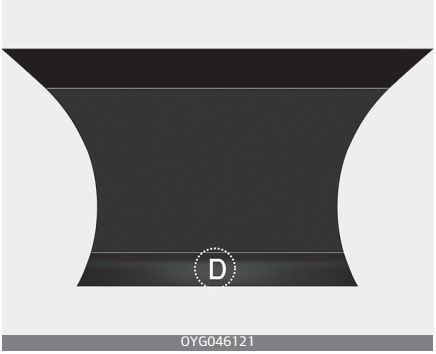

This indicator displays which automatic transmission shift lever is selected.

- Park : P
- Reverse : R
- Neutral : N
- Drive : D
- Sports Mode : 1, 2, 3, 4, 5, 6, 7, 8

LCD display

LCD display modes

	Mode						
	Sport (if equipped)	Trip Computer	Turn by Turn (if equipped)	Driving Assist	User Settings (if equipped)	Information	Master warning
Up/ Down	Gauges	Accumulated Info	Route Guidance	• Lane Departure Warning/ Lane Keeping Assist/ Smart Cruise Control/ Lane Following Assist/ Highway Driving Assist	Driver Assistance	Digital Speedometer	The Master Warning mode displays warning messages related to the vehicle when one or more systems is not operating normally.
		Since refueling	Destination Info		Head-Up Display	TPMS	
		Drive Information			Cluster		
		Auto Stop			Lights		
					Door		
				Driver Attention Warning	Convenience		
					Units		

The information provided may differ depending on which functions are applicable to your vehicle.

* For controlling the LCD modes, refer to "LCD display control" on page 4-69.

Sport mode (if equipped)

Type A

OCK040533N

Type B

OCK040532N

This mode displays Oil temperature (1), Torque gauge (2), Turbo boost gauge (3).

Trip computer mode

OCK040639N

The trip computer mode displays information related to vehicle driving parameters including Accumulated info, Driving information, and so on.

* For more details, refer to "Trip information (Trip computer)" on page 4-87.

Turn By Turn mode (if equipped)

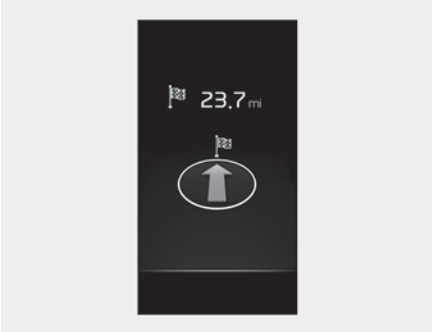

ODL3A040130

This mode displays the state of the navigation.

Driving Assist mode

OCK040495

- Lane Departure Warning
  Lane Keeping Assist
  Lane Following Assist
  Smart Cruise Control
  Highway Driving Assist (if equipped)
- Driver Attention Warning

* For more details, refer to each system information in "Driving your vehicle" on page 5-6.

Setting (if equipped)

To change the Driver Assistance settings, press the OK button on the steering wheel for more than 1 second when the Driving Assist mode is displayed.

⚠ WARNING

While driving, please do not change the setting mode. It may distract your attention and cause the accident.

Item	Explanation
SCC Reaction	Fast/Normal/Slow
Driving Convenience	Highway Driving Assist/ Highway Auto Speed Change
Warning Timing	Normal/Late
Warning Volume	High/Medium/Low
Driver Attention Warning	Leading Vehicle Departure Alert/Inattentive Driving Warning
Forward Safety	Active Assist/Warning only/ Off
Lane Safety	Assist/Warning Only/Off
Blind-Spot Safety	Blind-Spot View/Safe Exit Warning/Active Assist/ Warning Only/Off
Parking Safety	Surround View Monitor Auto On/Parking Distance Warning Auto ON/Rear Cross-Traffic Safety

✻ NOTICE

The information provided may differ depending on which functions are applicable to your vehicle.

Information

Digital speedometer

This digital speedometer display shows the speed of the vehicle.

ODL3A040152

Tire pressure

OCK040497L

This mode displays the state of the tire pressure.

* For more details, refer to "Tire Pressure Monitoring System (TPMS)" on page 6-10.

Master warning mode

OCK040536L

This warning light informs the driver the following situations.

- Forward Collision-Avoidance Assist malfunction
- Forward Collision-Avoidance Assist radar blocked
- Blind-Spot Collision Warning malfunction
- Blind-Spot Collision Warning radar blocked
- High Beam Assist malfunction
- Smart Cruise Control malfunction
- Smart Cruise Control radar blocked
- LED headlamp malfunction
- TPMS failure, low pressure, etc.

At this time, a Master Warning icon (⚠) will appear on the LCD display.

If the warning situation is solved, the master warning light will be turned off and the Master Warning icon will disappear.

User settings mode (if equipped)

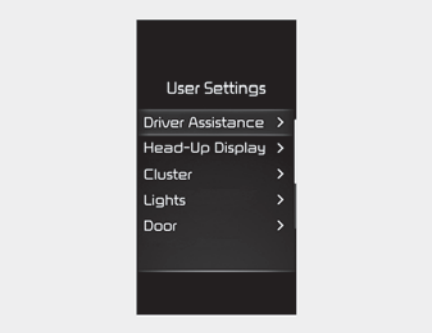

OCK040537L

In this mode, you can change the settings of the instrument cluster, doors, lamps, etc.

The information provided may differ depending on which functions are applicable to your vehicle.

Driver Assistance (if equipped)

Items	Explanation
SCC Reaction	• Fast/Normal/Slow To adjust the sensitivity of Smart Cruise Control. * For more details, refer to "Smart Cruise Control (SCC)" on page 5-112.
Driving Convenience (if equipped)	• Highway Driving Assist To select the function. * For more details, refer to "Highway Driving Assist (HDA) (if equipped)" on page 5-140. • Highway Auto Speed Change To select the function. * For more details, refer to "Navigation-based Smart Cruise Control (NSCC) (if equipped)" on page 5-129.
Warning Timing	• Normal/Late To select the Warning Time.
Warning Volume	• High/Medium/Low To select the Warning Volume.
Driver Attention Warning	• Leading Vehicle Departure Alert/Inattentive Driving Warning To select the function. * For more details, refer to "Driver Attention Warning (DAW)" on page 5-102.
Forward Safety	• Active Assist/Warning Only/Off To select the functions. * For more details, refer to "Forward Collision-Avoidance Assist (FCA) (Sensor fusion)" on page 5-65.
Lane Safety	• Assist/Warning Only/Off To select the functions. * For more details, refer to "Lane Keeping Assist (LKA)" on page 5-82.

Items	Explanation
Blind-Spot Safety (if equipped)	• Blind-Spot View To select the function. * For more details, refer to "Blind-Spot View Monitor (BVM) (if equipped)" on page 5-109. • Safe Exit Warning To select the function. * For more details, refer to "Safe Exit Warning (SEW) (if equipped)" on page 4-22. • Active Assist/Warning Only/Off To select the function. * For more details, refer to "Blind-Spot Collision-Avoidance Assist (BCA) (if equipped)" on page 5-89.
Parking Safety (if equipped)	• Surround View Monitor Auto On To select the function. * For more details, refer to "Surround View Monitor (SVM) (if equipped)" on page 4-112. • Parking Distance Warning Auto ON To select the function. * For more details, refer to "Forward/Reverse Parking Distance Warning (PDW) (if equipped)" on page 4-122. • Rear Cross-Traffic Safety To select the function. * For more details, refer to "Rear Cross-Traffic Collision-Avoidance Assist (RCCA) (if equipped)" on page 5-147.

* The information provided may differ depending on which systems are applicable to your vehicle.

Head-Up Display (if equipped)

Items	Explanation
Enable Head-Up Display	• If this item checked, the Head-Up display will be activated.
Display Height	• Adjust the height (1 ~ 20) of the HUD image on the HUD screen.
Rotation	• Adjust the degree (-5 ~ +5) of the HUD rotation.
Brightness	• Adjust the intensity (1 ~ 20) of the HUD brightness.

Items	Explanation
Contents Selection	• If below items are checked, the items will be activated. - Turn by Turn - Traffic Signs - Driving Convenience Info - Blind-Spot Safety Info - Radio/Media Info

* The information provided may differ depending on which functions are applicable to your vehicle. For more details, refer to "Head Up Display (HUD) (if equipped)" on page 4-105.

Cluster

Items	Explanation
Fuel Econ. Reset	• If this item checked, the average fuel economy will reset automatically after refueling or after ignition.
Wiper/Lights Display	• If this item checked, the Wiper/Lights Display will be activated.
Traffic Signs (if equipped)	• If this item checked, the Traffic Signs will be activated.
Icy Road Warning	• If this item checked, the Icy Road Warning display will be activated.
Welcome Sound (if equipped)	• If this item checked, the Welcome Sound will be activated.
Theme Selection (if equipped)	• Theme A/Theme B/Theme C To select the theme of instrument cluster LCD.
Blind-Spot View	• To activate or deactivate Blind-Spot View function. * For more details, refer to "Blind-Spot View Monitor (BVM) (if equipped)" on page 5-109.

* The information provided may differ depending on which functions are applicable to your vehicle.

Lights

Items	Explanation
One Touch Turn Signal	• Off: The one touch turn signal function will be deactivated. • 3, 5, 7 flashes: The turn signal indicator will blink 3, 5, or 7 times when the turn signal lever is moved slightly. * For more details, refer to "Lighting" on page 4-127.
Ambient Light Brightness (if equipped)	• Off/Level 1,2,3,4 To adjust the brightness of the Ambient Light.
Ambient Light Color (if equipped)	• Blue Flight/Peaceful Forest/Dreamy Purple/Aurora Violet/Orange Delight/Golden Insight/Refreshing Sea To select the color of the Ambient Light.
Ambient Lighting (if equipped)	• To activate or deactivate the Ambient Lighting.
Headlight Delay (if equipped)	• To activate or deactivate the headlight delay function.
High Beam Assist	• To activate or deactivate High Beam Assist function. * For more details, refer to "High Beam Assist (HBA)" on page 4-130.

* The information provided may differ depending on which functions are applicable to your vehicle.

Door

Items	Explanation
Auto Lock	• Enable on shift : All doors will be automatically locked if the vehicle is shifted from the P (Park) position to the R (Reverse), N (Neutral), or D (Drive) position. (with the engine ON, it is activated.) • Enable on speed: All doors will be automatically locked when the vehicle speed exceeds 9.3 mph (15 km/h).
Auto Unlock	• On shift to P : All doors will be automatically unlocked if the gear is shifted to the P (Park) position. (with the engine ON, it is activated.) • Vehicle off : All doors will be automatically unlocked when the ENGINE START/STOP button is set to the OFF position. • Off : The auto door unlock operation will be canceled.

Items	Explanation
2 Press Unlock	If this item is checked, the two press unlock will be activated. Press the door unlock button once to unlock the driver's door, and press the button once more within 4 seconds to unlock the rest of the doors.
Power Liftgate (if equipped)	• To activate or deactivate the Power Liftgate. * For more details, refer to "Power liftgate (if equipped)" on page 4-27.
Power Liftgate Opening Speed (if equipped)	• Fast/Normal To adjust the Power Liftgate Opening Speed.
Power Liftgate Opening Height (if equipped)	• Full Open/Level 3, 2, 1/User Height Setting To adjust the Power Liftgate Opening Height.
Smart Liftgate (if equipped)	• To activate or deactivate the Smart Liftgate. * For more details, refer to "Smart liftgate (if equipped)" on page 4-33.

* The information provided may differ depending on which systems are applicable to your vehicle.

Convenience (if equipped)

Items	Explanation
Seat Easy Access (if equipped)	• Off/Normal/Extended To select the function. * For more details, refer to "Driver position memory system (if equipped, for power seat)" on page 3-12.
Steering Easy Access (if equipped)	• To activate or deactivate the Steering Easy Access function. * For more details, refer to "Driver position memory system (if equipped, for power seat)" on page 3-12.
Rear Occupant Alert (if equipped)	• To activate or deactivate Rear Occupant Alert function. * For more details, refer to "Rear Occupant Alert (ROA) system" on page 4-21.
Welcome Mirror/Light (if equipped)	• To activate or deactivate the Welcome Mirror/Light function.

Items	Explanation
Wireless Charging System (if equipped)	• To activate or deactivate the Wireless Charging System function. * For more details, refer to "Wireless smart phone charging system" on page 4-169.
Service Interval	• Enable Service Interval : If this item is checked, the Service Interval function will be activated. • Adjust Interval : If the Service Interval menu is activated, you may adjust the time and distance. • Reset : To reset the Service Interval function.
Lateral seat support enhancement (if equipped)	• If this item checked, it increase lateral seat bolster support.

If the service interval is activated and the time and distance is adjusted, messages are displayed in the following situations each time the vehicle is turned on.

- Service in: Displayed to inform the driver the remaining mileage and days to service.
- Service required: Displayed when the mileage and days to service has been reached or passed.

If any of the following conditions occur, the mileage and number of days to service may be incorrect.

- The battery cable is disconnected.
- The battery is discharged.
- The fuse switch is turned off.

✻ NOTICE

To use the service interval menu, consult an authorized Kia dealer.

Units

Items	Explanation
Speed Unit	• MPH, km/h To select the Speedometer unit.
Temperature Unit	• °F/°C To select the Temperature unit.
Fuel Econ. Unit	• US gallon, UK gallon or L/100km, km/L To select the Fuel economy unit.
Torque Unit (if equipped)	• lb-ft, Nm To select the torque unit.
Tire Pressure Unit	• psi, kPa, bar To select the Tire Pressure Unit.
Turbo Boost Pressure Unit (if equipped)	• psi, kPa, bar To select the Turbo Boost Pressure unit.

* The information provided may differ depending on which functions are applicable to your vehicle.

Language

Items	Explanation
Language	• To select language.

Reset

Items	Explanation
Reset	You can reset the menus in the User Settings mode.

Vehicle Setup (For Infotainment System equipped vehicle)

Vehicle Settings in the infotainment system provides user options for a variety of settings including door lock/unlock features, convenience features, driver assistance settings, etc.

Vehicle Setup menu
- Driver Assistance
- Drive Mode
- Head-Up Display
- Cluster
- Climate
- Seat
- Lights
- Door
- Convenience
- Default

The information provided may differ depending on which functions are applicable to your vehicle.

* For detailed information, scan the QR code in a separately supplied Car Infotainment System Quick Reference Guide.

WARNING

Do not operate the Vehicle Settings while driving. This may cause distraction resulting in an accident.

4

Trip information (Trip computer)

The trip computer is a microcomputer-controlled driver information system that displays information related to driving.

NOTICE

Some driving information stored in the trip computer resets if the battery is disconnected.

Trip Modes

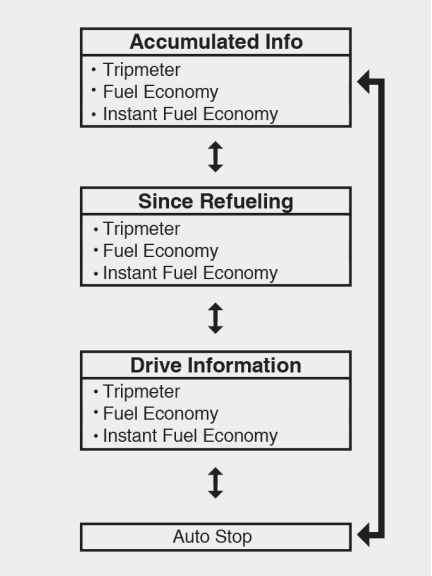

OCK040538N

To change the trip mode, scroll the toggle the switch (⋀ / ⋁) on the steering wheel.

Accumulated driving information mode

This display shows the accumulated trip distance (1), the average fuel efficiency (2), and the instant fuel economy (3).

OCK040630N

- Accumulated information is calculated after the vehicle has run for more than 0.2 miles (300 meters).
- If you press "OK" button for more than 1 second after the Cumulative Information is displayed, the information will be reset.
- If the engine is running, even when the vehicle is not in motion, the information will be accumulated.

Since Refueling

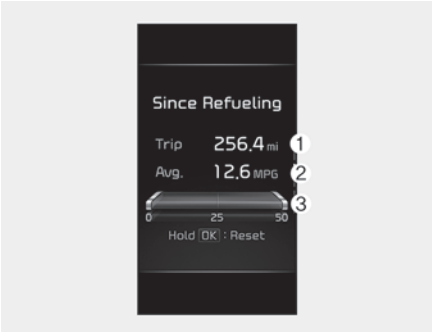

OCK040634N

This display shows the accumulated trip distance (1), the average fuel

efficiency (2), and the instant fuel economy (3) after refueling.

- Fuel efficiency is calculated after the vehicle has run for more than 0.2 miles (300 meters).
- After refueling more than 6 liters and driving over 1 km/h, the Since Refueling will reset to default automatically.
- If you press "OK" button for more than 1 second after the Since Refueling is displayed, the information will be reset.
- If the engine is running, even when the vehicle is not in motion, the information will be accumulated.

Drive Info display

This display shows the trip distance (1), the average fuel efficiency (2), and the instant fuel economy (3) information once per one ignition cycle.

OCK040633N

- Fuel efficiency is calculated after the vehicle has run for more than 0.2 miles (300 meters).
- If opening the driver's door after turning off the engine or 3 minutes passes after restarting the engine, Driving Information is reset.
- If you press "OK" button for more than 1 second after the Driving Information is displayed, the information will be reset.
- If the engine is running, even when the vehicle is not in motion, the information will be accumulated.

Auto stop time

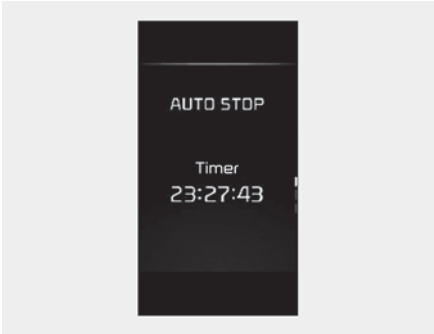

OJA040523L

This mode displays the elapsed time of Auto stop by "Idle stop and go system".

For more details, refer to "ISG (Idle Stop and Go) system" on page 5-11.

Warning messages

Warning messages appear on the LCD to warn the driver. It is located in the center of the instrument cluster.

The warning message may appear differently depending on the type of instrument cluster and some may not show the warning message at all.

The warning message is shown in either symbol, symbol and text, or text type only.

Door, hood, liftgate open

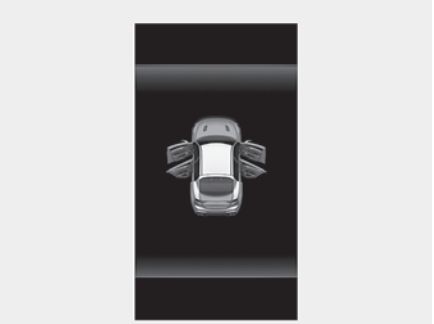

OCK040499

- This warning is displayed indicating which door, or the hood, or the liftgate is open.

Sunroof open (if equipped)

OCK040500

- This warning is displayed if you turn off the engine when the sunroof is open.

Window open (if equipped)

OCK040501

- This warning is displayed if you turn off the engine when any window is open.

Lights mode

OYB040571L

- This indicator displays which exterior light is selected using the lighting control.

You can activate or deactivate Wiper/Lights Display function from the User Settings mode in the cluster LCD display or the Settings in the Infotainment System screen.

Wiper mode

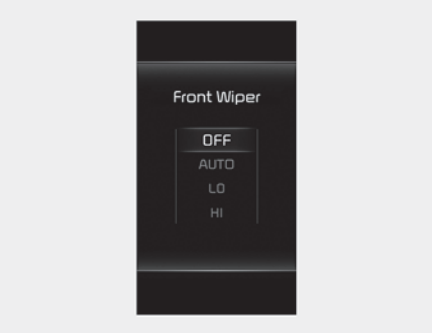

OCK040679N

- This indicator displays which wiper speed is selected using the wiper control.

You can activate or deactivate Wiper/Lights Display function from the User Settings mode in the cluster LCD display or the Settings in the Infotainment System screen.

Engine Overheated

- This warning message illuminates when the engine coolant temperature exceeds the proper range. This mean that the engine is overheated and may be damaged.

* If your vehicle is overheated, refer to "If the engine overheats" on page 6-8.

Shift to P

- This warning message illuminates if you try to turn off the engine without the gear in P (Park) position.
- At this time, the ENGINE START/STOP button turns to the ACC position.

Vehicle is in N. Press START button and shift to P (and turn vehicle off)

This message is displayed if you try to turn off the vehicle with the gear in N (Neutral).

To turn off the vehicle:

1. Press the ENGINE START/STOP button.
   The button will change to the ON position.

2. The gear to P (Park) position.
3. Press the ENGINE START/STOP again, then the vehicle will turn off.

Low key battery

- This warning message illuminates if the battery of the smart key is discharged when the ENGINE START/STOP button changes to the OFF position.

Press START button while turning wheel

- This warning message illuminates if the steering wheel does not unlock normally when the ENGINE START/STOP button is pressed.
- It means that you should press the ENGINE START/STOP button while turning the steering wheel right and left.

Press brake pedal to start engine

- This warning message illuminates if the ENGINE START/STOP button changes to the ACC position twice by pressing the button repeatedly without depressing the brake pedal.
- It means that you should depress the brake pedal to start the engine.

Key not in vehicle

- This warning message illuminates if the smart key is not in the vehicle when you press the ENGINE START/STOP button.
- It means that you should always have the smart key with you.

Key not detected

- This warning message illuminates if the smart key is not detected when you press the ENGINE START/STOP button.

Press START button again

- This warning message illuminates if you can not operate the ENGINE START/STOP button when there is a problem with the ENGINE START/STOP button system.
- It means that you could start the engine by pressing the ENGINE START/STOP button once more.
- If the warning illuminates each time you press the ENGINE START/STOP button, have the vehicle inspected by an authorized Kia dealer.

Press START button with key

- This warning message illuminates if you press the ENGINE START/STOP button while the warning message “Key not detected” is illuminating.

- At this time, the immobilizer indicator light blinks.

Turn FUSE SWITCH On

- This warning message illuminates if the fuse switch is OFF.
- It means that you should turn the fuse switch on.

* For more details, refer to "Fuses" on page 7-57.

Check BRAKE SWITCH fuse

- This warning message illuminates if the brake switch fuse is disconnected.
- It means that you should replace the fuse with a new one. If that is not possible, you can start the engine by pressing the ENGINE START/STOP button for 10 seconds in the ACC position.

Shift to P or N to start engine

- This warning message illuminates if you try to start the engine with the shift gear not in the P (Park) or N (Neutral) position.

✻ NOTICE

You can start the engine with the shift lever in the N (Neutral) position. But, for your safety, we recommend that you start the engine with the gear in the P (Park) position.

Low fuel

- This warning message is displayed if the fuel tank is almost out of fuel.
- When this message is displayed, the low fuel level warning light in the cluster will come on.
- It is recommended to look for the nearest fueling station and refuel as soon as possible.

Low washer fluid

- This warning message is displayed if the washer fluid level in the reservoir is nearly empty.
- Have the washer fluid reservoir refilled.

Check turn signal (if equipped)

- This message is displayed if there is a problem the turn signal. In this case, In this case, have the vehicle inspected by an authorized Kia dealer.

Check headlight LED

- This message is displayed if there is a problem with the LED headlamp. In this case, have the vehicle inspected by an authorized Kia dealer.

Device in wireless charger (if equipped)

- This warning messages will illuminate when the vehicle ignition is in OFF and the smart phone is on the wireless charging pad in below two situations.

1. When the driver or passenger door is opened.
2. When one minute passed after the ignition has been turned OFF (and the door has not been opened for more than one minute).

* For more details, refer to "Wireless smart phone charging system" on page 4-169.

Battery discharging due to external electrical devices

- The vehicle can detect self-discharge of the battery due to over-current that is generated by unauthorized electrical devices such as dashboard camera (dash cam) mounting during parking.
- Please note that functions such as ISG are limited and battery discharge problems may occur.
- If the warning continues even after external electrical devices are removed, have your vehicle inspected by an authorized Kia dealer.

Check Electronic Suspension (if equipped)

- This warning message is displayed when the Electronic Control Suspension (ECS) system has malfunction or is operating improperly.
- In this case, have the vehicle inspected by an authorized Kia dealer.

* For more details, refer to "Electronic Control Suspension (ECS) (if equipped)" on page 5-60.

NOTICE

When there is a malfunction with the Electronic Stability Control (ESC), the Electronic Control Suspension (ECS) warning message may illuminate as well as the Electronic Stability Control (ESC) indicator light.

Warning and indicator lights

Warning lights

NOTICE

Warning lights

Make sure that all warning lights are OFF after starting the engine. If any light is still ON, this indicates a situation that needs attention.

Air bag Warning Light

This warning light illuminates:

- Once you set the ENGINE START/STOP button to the ON position.
  - It illuminates for approximately 6 seconds and then goes off.
- When there is a malfunction with the SRS.
  In this case, have the vehicle inspected by an authorized Kia dealer.

Seat Belt Warning Light

- This warning light informs the driver that the seat belt is not fastened.

* For more details, refer to "Seat belts" on page 3-22.

Parking Brake & Brake Fluid Warning Light BRAKE

This warning light illuminates:

- Once you set the ENGINE START/STOP button to the ON position.
  - It illuminates for approximately 3 seconds.
  - It remains on if the parking brake is applied.
- When the parking brake is applied.
- When the brake fluid level in the reservoir is low.
  - If the warning light illuminates with the parking brake released, it indicates the brake fluid level in reservoir is low.

If the brake fluid level in the reservoir is low:

1. Drive carefully to the nearest safe location and stop your vehicle.
2. With the engine stopped, check the brake fluid level immediately and add fluid as required (For more details, refer to "Brake fluid" on page 7-32). Then check all brake components for fluid leaks. If any leak on the brake system is still found, the warning light remains on, or the brakes do not operate properly, do not drive the vehicle.
   In this case, have your vehicle towed to an authorized Kia dealer and inspected.

Dual-diagonal braking system

Your vehicle is equipped with dualdiagonal braking systems. This means you still have braking on two wheels even if one of the dual systems should fail.
With only one of the dual systems working, more than normal pedal travel and greater pedal pressure are required to stop the vehicle.
Also, the vehicle will not stop in as short a distance with only a portion of the brake system working.
If the brakes fail while you are driving, shift to a lower gear for additional engine braking and stop the vehicle as soon as it is safe to do so.

⚠ WARNING

Parking Brake & Brake Fluid Warning Light

Driving the vehicle with a warning light ON is dangerous. If the Parking Brake & Brake Fluid Warning Light illuminates with the parking brake released, it indicates that the brake fluid level is low.

In this case, have the vehicle inspected by an authorized Kia dealer.

Anti-lock Brake System (ABS) Warning Light (ABS)

This warning light illuminates:

- Once you set the ENGINE START/STOP button to the ON position.
  - It illuminates for approximately 3 seconds and then goes off.
- When there is a malfunction with the ABS (The normal braking system will still be operational without the assistance of the anti-lock brake system).
  In this case, have the vehicle inspected by an authorized Kia dealer.

Electronic Brake force Distribution (EBD) System Warning Light (ABS) (!) (P) BRAKE

These two warning lights illuminate at the same time while driving:

- When the ABS and regular brake system may not work normally.
  In this case, have the vehicle inspected by an authorized Kia dealer.

WARNING

Electronic Brake force Distribution (EBD) System Warning Light

When both ABS and Parking Brake & Brake Fluid Warning Lights are on, the brake system will not work normally and you may experience an unexpected and dangerous situation during sudden braking.

In this case, avoid high speed driving and abrupt braking.Have your vehicle inspected by an authorized Kia dealer as soon as possible.

NOTICE

Electronic Brake force Distribution (EBD) System Warning Light

When the ABS Warning Light is on or both ABS and Parking Brake & Brake Fluid Warning Lights are on, the speedometer, odometer, or tripmeter may not work. Also, the EPS Warning Light may illuminate and the steering effort may increase or decrease.

In this case, have the vehicle inspected by an authorized Kia dealer.

Electric Power Steering (EPS) Warning Light

This warning light illuminates:

- Once you set the ENGINE START/STOP button to the ON position.
  - It remains on until the engine is started.
- When there is a malfunction with the EPS.
  In this case, have the vehicle inspected by an authorized Kia dealer.

Malfunction Indicator Lamp (MIL)

This warning light illuminates:

- When you set the ENGINE START/STOP button to the ON position.
  - The malfunction indicator light illuminates for about 3 seconds and then goes off.
- Whenever there is a malfunction with either the emission control system or the engine or the vehicle powertrain.
  In this case, have the vehicle inspected by an authorized Kia dealer.

⚠ CAUTION

Malfunction Indicator Lamp (MIL)

Driving with the Malfunction Indicator Lamp (MIL) on may cause damage to the emission control systems which could effect drivability and/or fuel economy.

⚠ CAUTION

For Smartstream G2.5 FR T-GDi

If the enhanced engine protection system becomes activated due to lack of engine oil, engine power will be limited. If such condition continues repeatedly, the Malfunction Indicator Lamp will illuminate.

⚠ CAUTION

Gasoline Engine

If the Malfunction Indicator Lamp (MIL) illuminates, potential catalytic converter damage is possible which could result in loss of engine power.

In this case, have the vehicle inspected by an authorized Kia dealer.

Charging System Warning Light

This warning light illuminates:

- When there is a malfunction with either the alternator or electrical charging system.

If there is a malfunction with either the alternator or electrical charging system:

1. Drive carefully to the nearest safe location and stop your vehicle.
2. Turn the engine off and check the alternator drive belt for looseness or breakage.
   If the belt is adjusted properly, there may be a problem in the electrical charging system.
   If the belt is adjusted properly, there may be a problem in the electrical charging system.
   In this case, have the vehicle inspected by an authorized Kia dealer.

Engine Oil Pressure Warning Light

This warning light illuminates:

- Once you set the ENGINE START/STOP Button to the ON position.
  - It remains on until the engine is started.
- When the engine oil pressure is low.

- Drive carefully to the nearest safe location and stop your vehicle.
- Turn the engine off and check the engine oil level (For more details, refer to "Engine oil" on page 7-26). If the level is low, add oil as required.
- If the warning light remains on after adding oil or if oil is not available, have the vehicle inspected by an authorized Kia dealer.
  Continued driving with the warning light on may cause engine failure.
- When engine oil pressure decreases due to insufficient engine oil, etc., the engine oil pressure warning light will illuminate.

⚠ CAUTION

For Smartstream G2.5 FR T-GDi

If the enhanced engine protection system which limits engine power will be activated. If the engine oil pressure is restored, the engine oil pressure warning light and the enhanced engine protection system will turn off.

when the engine oil pressure is restored, the warning light and the enhanced engine protection system will turn off after the engine is restarted.

⚠ CAUTION

Engine Oil Pressure Warning Light

- If the engine does not stop immediately after the Engine Oil Pressure Warning Light is illuminated, severe damage could result.
- If the warning light stays on while the engine is running, it indicates that there may be serious engine damage or malfunction. In this case,
  1. Stop the vehicle as soon as it is safe to do so.
  2. Turn off the engine and check the oil level. If the oil level is low, fill the engine oil to the proper level.
  3. Start the engine again. If the warning light stays on after the engine is started, turn the engine off immediately. In this case, have the vehicle inspected by an authorized Kia dealer.

Low Fuel Level Warning Light

This warning light illuminates:

- When the fuel tank is nearly empty.
  Add fuel as soon as possible.

⚠ CAUTION

Low Fuel Level

Driving with the Low Fuel Level warning light on or with the fuel

level below “E” can cause the engine to misfire and damage the catalytic converter (if equipped).

Low Tire Pressure Warning Light

This warning light illuminates:

- Once you set the ENGINE START/STOP button to the ON position.
  - It illuminates for approximately 3 seconds and then goes off.
- When one or more of your tires are significantly underinflated (The location of the underinflated tires are displayed on the LCD display).

* For more details, refer to "Tire Pressure Monitoring System (TPMS)" on page 6-10.

This warning light remains on after blinking for approximately 70 seconds or repeats blinking and off at the intervals of approximately 3 seconds:

- When there is a malfunction with the TPMS.
  In this case, have the vehicle inspected by an authorized Kia dealer.

* For more details, refer to "Tire Pressure Monitoring System (TPMS)" on page 6-10.

⚠ WARNING

Safe Stopping

- The TPMS cannot alert you to severe and sudden tire damage caused by external factors.
- If you notice any vehicle instability, immediately take your foot off the accelerator pedal, apply the brakes gradually with light force, and slowly move to a safe position off the road.

LED Headlamp Warning Light

This warning light illuminates:

- When there is a malfunction with the LED headlamp.

In this case, have the vehicle inspected by an authorized Kia dealer.

⚠ CAUTION

LED Headlamp Warning Light

Continuous driving with the LED Headlamp Warning Light on can reduce LED headlamp (low beam) life.

Forward Collision-Avoidance Assist Warning Light

This warning light illuminates :

- Once you set the ENGINE START/STOP button to the ON position.
  - FCA warning light illuminates for approximately 3 seconds and then turns off.
- When there is a malfunction with FCA.
  In this case, have the vehicle inspected by an authorized Kia dealer

* For more details, refer to "Forward Collision-Avoidance Assist (FCA) (Sensor fusion)" on page 5-65.

All Wheel Drive (AWD) Warning Light (if equipped)

This indicator light illuminates:

- When there is a malfunction with the AWD system.

In this case, have the vehicle inspected by an authorized Kia dealer.

Master Warning Light (if equipped)

This indicator light illuminates:

- This warning light informs the driver the following situations
  - Forward Collision-Avoidance Assist malfunction
  - Forward Collision-Avoidance Assist radar blocked
  - Blind-Spot Collision Warning malfunction
  - Blind-Spot Collision Warning radar blocked
  - High Beam Assist malfunction
  - Smart Cruise Control malfunction
  - Smart Cruise Control radar blocked
  - LED headlamp malfunction
  - TPMS failure, low pressure, etc.

  If the warning situation is solved, the master warning light will turn off.

Dynamic Bending Light (DBL) Warning Light (if equipped)

This warning light blinks:

- Once you set the ENGINE START/STOP button to the ON position.
  - The Dynamic Bending Light warning light illuminates for approximately 3 seconds and then turns off.
- When there is a malfunction with the Dynamic Bending Light (DBL).

If there is a malfunction with the Dynamic Bending Light (DBL):

1. Drive carefully to the nearest safe location and stop your vehicle.
2. Turn the engine off and restart the engine. If the warning light remains on, have the vehicle

inspected by an authorized Kia dealer.

Electronic Parking Brake (EPB) Warning Light EPB

This warning light illuminates:

- Once you set the ENGINE START/STOP button to the ON position.
  - It illuminates for approximately 3 seconds and then goes off.
- When there is a malfunction with the EPB.
  In this case, have the vehicle inspected by an authorized Kia dealer.

NOTICE

Electronic Parking Brake (EPB) Warning Light

The Electronic Parking Brake (EPB) Warning Light may illuminates when the Electronic Stability control (ESC) Indicator Light comes on to indicates that the ESC is not working properly (This does not indicate malfunction of the EPB).

Icy Road Warning Light (if equipped)

- This warning light is to warn the driver the road may be icy.
  When the temperature on the outside temperature gauge is approximately below 39°F (4°C), the Icy Road Warning Light and Outside Temperature Gauge blinks and then illuminates. Also, the warning chime sounds 1 time.

NOTICE

If the icy road warning light appears while driving, you should drive more attentively and safely, refraining from over-speeding, rapid acceleration, sudden braking or sharp turning, etc.

Indicator Lights

Electronic Stability Control (ESC) Indicator Light

This indicator light illuminates:

- Once you set the ENGINE START/STOP button to the ON position.
  - It illuminates for approximately 3 seconds and then goes off.
- When there is a malfunction with the ESC system.
  In this case, have the vehicle inspected by an authorized Kia dealer.

This indicator light blinks:

While the ESC is operating.

* For more details, refer to "Electronic Stability Control (ESC)" on page 5-53.

Electronic Stability Control (ESC) OFF Indicator Light

This indicator light illuminates:

- Once you set the ENGINE START/STOP button to the ON position.
  - It illuminates for approximately 3 seconds and then goes off.
- When you deactivate the ESC system by pressing the ESC OFF button.

* For more details, refer to "Electronic Stability Control (ESC)" on page 5-53.

Auto Stop Indicator Light

This indicator light illuminates:

- [White] The system is activated.
- [Green] When the engine enters the Idle Stop mode of ISG (Idle Stop and Go) system.
- [Yellow] When there is a malfunctions with the ISG system. In this case, have the vehicle inspected by an authorized Kia dealer.

* For more details, refer to "ISG (Idle Stop and Go) system" on page 5-11.

NOTICE

When the engine automatically starts by the ISG system, some warning lights (ABS, ESC, ESC OFF, EPS or Parking brake warning light) may turn on for a few seconds. This happens because of the low battery voltage. It does not mean the system is malfunctioning.

Immobilizer Indicator Light (With Smart Key)

This indicator light illuminates for up to 30 seconds:

- When the vehicle detects the smart key in the vehicle properly while the ENGINE START/STOP button is ACC or ON.
  - At this time, you can start the engine.
  - The indicator light goes off after starting the engine.

This indicator light blinks for a few seconds:

- When the smart key is not in the vehicle.
  - At this time, you can not start the engine.

This indicator light illuminates for 2 seconds and goes off:

- When the vehicle can not detect the smart key which is in the vehicle while the ENGINE START/STOP button is ON.
  In this case, have the vehicle inspected by an authorized Kia dealer.

This indicator light blinks:

- When the battery of the smart key is weak.

- At this time, you can not start the engine. However, you can start the engine if you press the ENGINE START/STOP button with the smart key. (For more details, refer to "ENGINE START/STOP button" on page 5-8.

- When there is a malfunction with the immobilizer system.
  In this case, have the vehicle inspected by an authorized Kia dealer.

Turn Signal Indicator Light

This indicator light blinks:

- When you switch on the turn signal light on.

If any of the following occurs, there may a malfunction with the turn signal system. In this case, have the vehicle inspected by an authorized Kia dealer.

- The indicator light does not blink but illuminates.
- The indicator light blinks more rapidly.
- The indicator light does not illuminate at all.

High Beam Indicator Light

This indicator light illuminates:

- When the headlights are on and in the high beam position.
- When the turn signal lever is pulled into the Flash-to-Pass position.

Low Beam Indicator Light (if equipped)

This indicator light illuminates:

- When the headlights are on.

Light ON Indicator Light

This indicator light illuminates:

- When the tail lights or headlights are on.

High Beam Assist Indicator Light

AUTO

This warning light illuminates :

- When the high-beam is on with the light switch in the AUTO light position.
- If your vehicle detects oncoming or preceding vehicles, High Beam Assist will switch the high beam to low beam automatically.

* For more details, refer to "High Beam Assist (HBA)" on page 4-130.

AUTO HOLD Indicator Light AUTO HOLD

This indicator light illuminates:

- [White] When you activate the auto hold system by pressing the AUTO HOLD button.
- [Green] When you stop the vehicle completely by depressing the brake pedal with the auto hold system activated.
- [Yellow] When there is a malfunction with the auto hold system. In this case, have the vehicle inspected by an authorized Kia dealer.

* For more details, refer to "Auto Hold" on page 5-48.

Lane Keeping Assist Indicator Light

This indicator light illuminates :

- [White] The system is activated.
- [Green] When the function operating conditions are satisfied.
- [Yellow] When there is a malfunction with Lane Keeping Assist. In this case, have the vehicle inspected by an authorized Kia dealer.

* For more details, refer to "Lane Keeping Assist (LKA)" on page 5-82.

Head Up Display (HUD) (if equipped)

Description

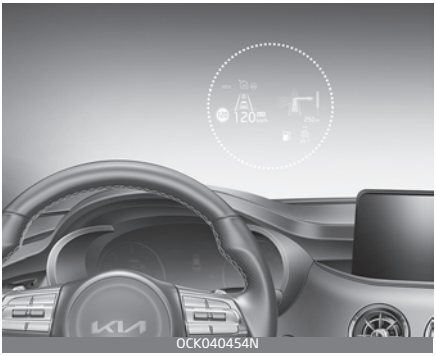

OCK040454N

The Head Up Display is a transparent display which projects some information of the instrument cluster and navigation on the windshield glass.

- The Head Up Display image on the windshield glass may be invisible when:
  - Sitting posture is bad.
  - Wearing a polarized sunglasses.
  - There is an object on the cover of the Head Up Display.
  - Driving on a wet road.
  - An inadequate lighting is turned on inside the vehicle.
  - Any light comes from the outside.
  - Wearing an inadequate glasses to your eyesight.
- If the Head Up Display image is not shown well, adjust the height, rotation or illumination of the

Head Up Display in the LCD Display.

* For more details, refer to "LCD display modes" on page 4-75.

- When the Head Up Display needs inspection or repair, consult an authorized Kia dealer.

WARNING

Head Up Display

- Do not make the front windshield glass have window tint or other types of metallic coating. Otherwise, the Head Up Display image may be invisible.
- Do not place any accessories on the crash pad or attach any objects on the windshield glass.
- As Blind-Spot Collision Warning is a supplemental device for your safe driving, it may be dangerous to rely on only the BCW information of the Head Up Display image when changing the lane. Always pay attention to drive safely.

CAUTION

When replacing the front windshield glass of the vehicles equipped with the Head Up Display, replace it with a windshield glass designed for the Head Up Display operation. Otherwise, duplicated images may be displayed on the windshield glass.

Head Up Display ON/OFF

The Head-up display is activated or deactivated when you select 'User Settings (LCD display) or Setup → Vehicle (Infotainment System screen) → Head-up display → Enable Head-Up Display'.

Head Up Display Information

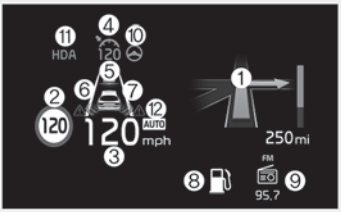

OCK040640N

1. Turn By Turn navigation information
2. Road signs
3. Speedometer
4. SCC setting speed
5. SCC vehicle distance information
6. Lane Safety information
7. Blind-Spot Safety information
8. Warning lights (Low fuel)
9. AV mode information
10. Lane Following Assist information
11. Highway Driving Assist information (if equipped)
12. Highway Auto Speed Change information (if equipped)

Head Up Display Setting

On the LCD display, you can change the head up display settings as follows.

1. Enable Head-Up Display
2. Display Height
3. Rotation
4. Brightness
5. Content Selection

* For more details, Refer to "LCD display modes" on page 4-75.

Rear View Monitor (RVM) (if equipped)

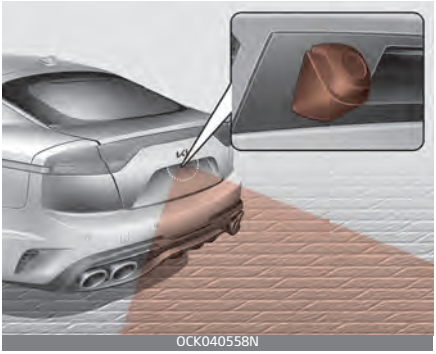

OCK040558N

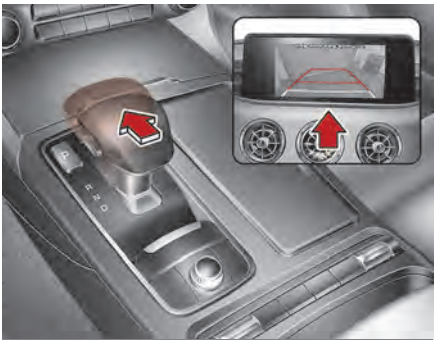

OCK040404

Rear View Monitor will show the area behind the vehicle to assist you when parking or backing up.

* If your vehicle is equipped with an infotainment system, you can learn how to setup on the website via QR code in the infotainment quick reference guide.

Detecting sensor

Rear view camera

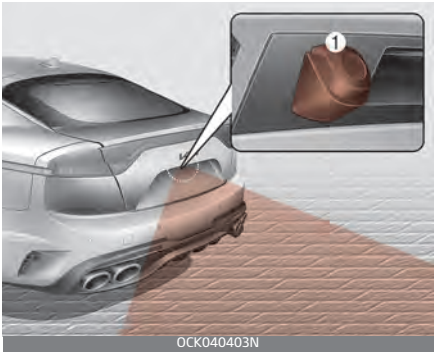

[1] : Rear view camera

Refer to the picture above for the detailed location of the detecting sensor.

Function settings

Camera Setting

- You can change Rear View Monitor settings by pressing the setup icon (⚙) on the screen while the function is operating, or select 'Setup → Vehicle (Infotainment System screen) → Parking Safety → Camera Settings' from the Settings menu in the Settings in the Infotainment System screen while the ENGINE START/STOP button is in the ON position.
- Rear view parking guide line settings can be changed in the display information and the screen brightness/contrast value can be changed in the screen settings.

⚠ WARNING

The image shown on the screen may differ from the actual distance of the object. Make sure to directly check the vehicle's surroundings for safety.

⚠ CAUTION

Always keep the rear view camera lens clean. If the lens is covered with foreign material, it may adversely affect camera performance and Rear View Monitor may not operate normally.

Function operation

Rear View Monitor controller

Parking/View button

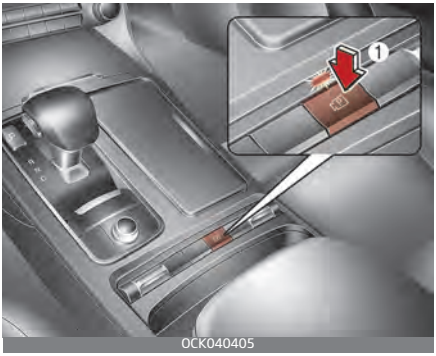

- Press the Parking/View button (1) to turn Rear View Monitor on or off.

Rear view

Operating conditions

- If the gear is shifted to R (Reverse), while rear view is displayed on the screen.

Off conditions

- The rear view will not be turned off with the gear in R (Reverse).
- If pressing the Parking/View button (1) when the gear is in P (Parking) position with the video is displayed, the video will be turned off.

Extended rear view

If the gear is shifted from R (Reverse) to N (Neutral) or D (Drive), the rear view will be maintained to park the vehicle safely.

Operating conditions

- If the gear is shifted from R (Reverse) to N (Neutral) or D (Drive), the rear view will be turned on.

Off conditions

- The rear view will turn off when vehicle speed is above 6 mph (10 km/h).
- The rear view will turn off when the Parking/View button (1) is pressed.
- If the gear is shifted to p (park), the function is turned off.

Rear view while driving

Rear view while driving is a driving assist function that shows the image behind the vehicle on the

screen regardless of vehicle speed while driving.

Operating conditions

- The ENGINE START/STOP button is ON.
- The rear view monitor button (1) is pressed when gearshift status is D (Drive), N (Neutral).

Off conditions

- Driving view button is pressed again.
- One of the infotainment system button is pressed.
- If the gear is shifted to p (park), the function is turned off.

When operating

- If the gear is shifted to R (Reverse), while Rear view while driving is displayed on the screen, the screen will change to rear view.
- An icon ( ) will be displayed in the upper right of the infotainment system screen to indicate Rear view while driving is supported.

Rear top view

When you touch the Soft button ( ), the top view is displayed on the screen and shows the distance from the vehicle in the back of your vehicle while parking.

Function malfunction and limitations

Function malfunction

- When Rear View Monitor is not working properly, or the screen flickers, or the camera image does not display normally, have the function inspected by an authorized Kia dealer.

Limitations of the function

- When the vehicle is stopped for a long time in winter or when the vehicle is parked in an indoor parking lot, the exhaust fumes may temporarily blur the image.

⚠ WARNING

Rear view while driving is a driving assist function. As the appearance on the screen may differ from the actual location, check the front/rear/side view directly for safety.

⚠ WARNING

- Rear View Monitor is not a safety device. It only serves to assist the driver in identifying objects directly behind the middle of the vehicle. The camera does not cover the complete area behind the vehicle.
- Never rely solely on the rear view monitor. As there are blind spots that do not appear on the camera while backing up and parking, You must always use methods of viewing the area behind you including looking over both shoulders as well as continuously checking all three rear view mirrors.
- Always look around your vehicle to make sure there are no objects or obstacles before moving the vehicle in any direction to prevent a collision.
- Always pay close attention when the vehicle is driven close to objects, particularly pedestrians, and especially children.
- Always keep the camera lens clean. If lens is covered with foreign matter, the camera may not operate normally.
- When stopping for a long time in winter or parking in an indoor parking lot, the image may temporarily be blurry due to the exhaust gas.

Surround View Monitor (SVM) (if equipped)

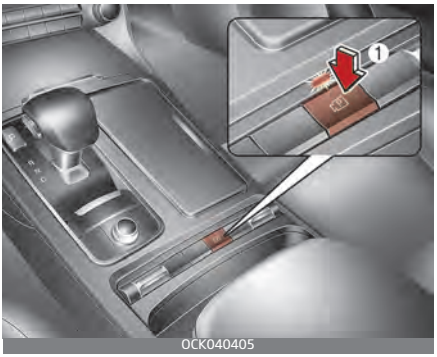

OCK040405

OCK040638

Surround View Monitor can assist in parking by allowing the driver to see around the vehicle.

- Surround View Monitor park assist view function can assist in parking by allowing the driver to see around the vehicle with the different view modes.
- Surround View Monitor will assist in parking by allowing the driver to see around the vehicle.

* For more detailed information, refer to a separately supplied Infotainment system manual.

Detecting sensor

SVM-front view camera (1) SVM-side view camera (2), (3)

OCK040547N

SVM-rear view camera (4)

OCK040546N

Refer to the picture above for the detailed location of the detecting sensors.

Function settings

Camera Setting

- You can change Surround View Monitor settings by pressing the setup icon (⚙) on the screen while the function is operating, or select "Setup → Vehicle (Infotainment System screen) → Driver Assistance → Parking Safety → Camera Settings' from the Settings menu in the Settings in the Infotainment System screen while the ENGINE START/STOP button is in the ON position.
- You can change the settings of the following information:
  - Top view
  - Rear view
  - Parking distance warning
- You can change the following lists in the screen settings:
  - brightness (daytime)
  - brightness (nighttime)
  - contrast

Top view

- If top view is selected, the top view will be displayed on the right side of top view in the Surround View Monitor screen.
- The top view also works in pair with the front top view and rear top view guideline display.

Rear view

OCK040613

- If rear view is selected, the rear view will be displayed on the rear view screen.
- The horizontal guideline of the rear view shows the distance of 20 in. (0.5 m), 40 in. (1 m), 90 in. (2.3m) from the vehicle.

Top view

OCK040616

- If warning is selected, the warning image will be displayed on the right side of top view in the Surround View Monitor screen.
- The warning image appears only when the parking distance warning occurs.

Surround View Monitor Auto On

- With the ENGINE START/STOP button is in the ON position, Surround view monitor auto activation is activated or deactivated when you select 'User Settings (LCD display) or Setup → Vehicle → Driver Assistance → Parking Safety → Surround View Monitor Auto On'.
  * For more details, refer to "LCD display modes" on page 4-75.
  If your vehicle is equipped with additional Infotainment System, please scan the QR code in a separately supplied Car Infotainment System Quick Reference Guide.

Function operation

Surround View Monitor controller

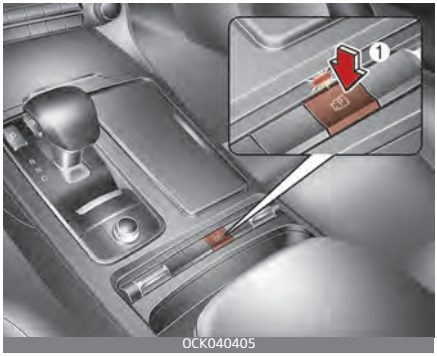

OCK040405

OCK040550

OCK040408

- Press the Parking/View button (1) to turn on Surround View Monitor.
- Press the button again to turn off the function.
- Press the Change View button (2) to change the view mode.
- Press the Infotainment system button (3) to turn off the function except rear view.

Front view

The function displays front view with the gear in N (Neutral) or D (Drive) to help you park safely. Front view contains top view/front view.

Operating conditions

- The function will operate when the following conditions are satisfied:
  - The front view will operate when the gear is shifted from R (Reverse) to N (Neutral) or D (Drive).
  - If pressing the Parking/View (1) button shortly when the rear view is displayed on the screen and the gear is in N (Neutral)/D (Drive) position together with 9 mph (15 km/h) or under the vehicle speed, the front view will be displayed on the screen.
  - The Parking/View button (1) is pressed when gearshift status is D (Drive), N (Neutral).
- The Surround View Monitor Auto On will operate when the following conditions are satisfied:
  - If the Forward/Revers Parking Distance Warning warns with the gear in D (Drive), the parking assist front view will be displayed when 'Driver Assistance → Parking Safety → Surround View Monitor Auto On' is selected.

Off conditions

- The Parking/View button (1) is pressed again.
- When vehicle speed is above 9 mph (15 km/h) and the gear is in D (Drive), Surround View Monitor

will be turned off and the screen will be changed to the infotainment system screen with the Surround View Monitor. The screen will not revert to the surround view screen even though the vehicle speed is below 19 mph (15 km/h) again.
- Press the infotainment system button (3) to change the screen to infotainment system screen.

Rear view

The function displays rear view with the gear in N (Neutral) or D (Drive) to help you park safely. Rear view contains top view/rear view/side view.

Operating conditions

- The screen is turned on when the gear is shifted to R (Reverse).
- The screen is turned on when the Parking/View button is pressed when the gear is in P (Parking). However, parking guidelines are not shown.

Off conditions

- When the gear is in R (Reverse), the screen is not turned off.
- The screen is turned off when the Parking/View button (1) is pressed with the gear in P (Parking).
- When shifting the gear from R (Reverse) position to P (Parking) position, the screen will be turned off.

Rear view while driving (if equipped)

Rear view while driving is a assist function that shows the image behind the vehicle on the screen regardless of vehicle speed while driving.

Operating conditions

- The engine is running.
- The vehicle's speed is over 9 mph (15 km/h) and the Parking/View button is pressed (1, indicator ON).
- The vehicle's speed is under 9 mph (15 km/h) and the icon (2) on the screen is pressed.

Off conditions

- The Parking/View button (1, indicator OFF) is pressed again.
- Other SVM modes are selected from the screen (when vehicle speed is under 9 mph (15 km/h)).
- One of the infotainment system button (3) is pressed.

In case of driving over 15km/h with SVM operating:

- The rear image stays ON when Rear view while driving was on the screen.
- When one of the other SVM view modes (front wide view, front top

view, front side view) was on the screen, the screen turns OFF and switches to the previously displayed infotainment system screen.
- While driving under 9 mph (15 km/h) with the state that Rear view while driving is ON, the rear image of Rear view while driving stays ON.
- You can select other SVM view modes (front wide view, front top view, front side view) by pressing the view mode on the infotainment system screen.
- When the vehicle is backing up, the rear image will be appear on the screen automatically regardless of the vehicle speed or the Parking/View button (1, indicator OFF) is pressed again.
- Other SVM modes are selected from the screen (when vehicle speed is under 9 mph (15 km/h))
- One of the infotainment system button (3) is pressed.
- The Parking/View button (1) status.
- If the rear image of Rear view while driving was ON, the screen switches to the rear surround view.
- When the gear position is shifted from R (Reverse) to D (Drive), the screen of the previous SVM mode is displayed. A warning indicator on the screen appears when:
  - The liftgate is opened
  - The driver/passenger's door is opened
  - The outer side view mirror is folded

Function malfunction and limitations

Function malfunction

- When Surround View Monitor function is not working properly, or the screen flickers, or the camera image does not display normally, have the system inspected by an authorized Kia dealer.

Limitations of the function

- When the vehicle is stopped for a long time in winter or when the vehicle is parked in an indoor parking lot, the exhaust fumes may temporarily blur the image.
- The screen will not be displayed properly and the warning icon appears on the top left side of the infotainment system when:
  - The liftgate is opened
  - The driver or front passenger door is opened
  - The outside rearview mirror is folded

⚠ WARNING

- Rear view while driving is a supplementary function. Make sure to check the rear view directly for safety. What you see on the

screen may differ from the actual vehicle's location.

- If rear image was ON while driving, an icon ( ) is displayed in the upper right of the infotainment system screen to indicate DRV function is supported. Pay attention not to be confused with front wide view of SVM.

NOTICE

- When the rear view while driving is turned on, the function is maintained regardless of the vehicle speed while driving.
- If you reverse when the rear view while driving is turned on, the screen is changed to parking assist view.

Reverse Parking Distance Warning (PDW) (if equipped)

Reverse Parking Distance Warning will warn the driver if an obstacle is detected when the vehicle is backing up at low speeds.

WARNING

- Reverse Parking Distance Warning is a supplemental function. The operation of the function can be affected by several factors (including environmental conditions). It is the responsibility of the driver to always check the rear view before and while parking.
- Pay close attention when driving near objects, pedestrians, and especially children.
- Some objects may not be detected by the ultrasonic sensors due to the objects distance, size or material, all of which can limit the effectiveness of the sensor.
- Your new vehicle warranty does not cover any accidents or damage to the vehicle or injuries to its occupants.

Detecting sensor

Rear ultrasonic sensor

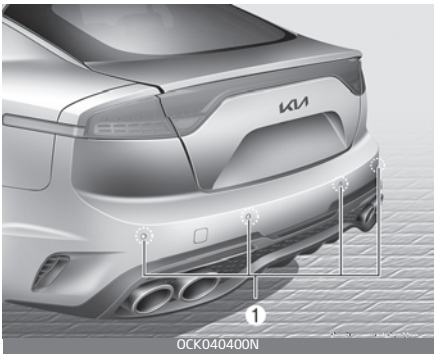

Refer to the picture above for the detailed location of the rear ultrasonic sensors (1).

⚠ CAUTION

- Take the following precautions to maintain optimal performance of the detecting sensor:
  - Never disassemble the detecting sensors or sensor assembly, or apply any impact on it.
  - If the detecting sensors have been replaced or repaired, have the system inspected by an authorized Kia dealer.
- Reverse Parking Distance Warning may not operate normally when:
  - Moisture is frozen on the sensor
  - Sensor is covered with foreign matters, such as snow or water
- The function will operate normally when such foreign matters are removed.
- Reverse Parking Distance Warning may malfunction when:
  - Driving on uneven road, gravel roads or bushes
  - Objects that generates ultrasonic waves such as vehicle horns, loud motorcycle engine sound or truck air brakes are near the sensor
  - Heavy rain or water spray is present
  - Wireless transmitters or mobile phones are present near the sensor
  - The sensor is covered with snow
  - Affected by another vehicle's sensors
  - Water flows on the surface of the sensor
  - Installing the license plate differently from the original location
- Detecting range may decrease when:
  - Sensor is covered with foreign matters, such as snow or water
  - The weather is extremely hot or cold
- The function will operate normally when such foreign matters are removed.

- The following objects may not be detected:
  - Sharp or slim objects, such as ropes, chains or small poles
  - Objects, which tend to absorb sensor frequency, such as clothes, spongy material or snow
  - Objects smaller than 40 in. (1 m) in length and narrower than 6 in. (14 cm) in diameter

Function settings

Turning system ON/OFF (if equipped)

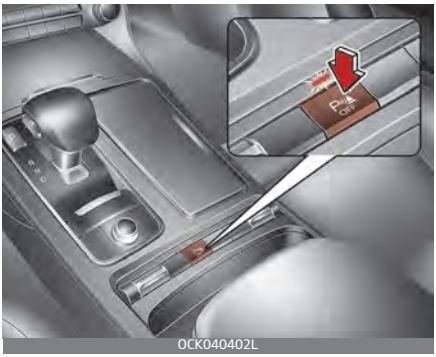

- Press the Parking Distance Warning Off button (P OFF) to turn the function on and off.
- Reverse Parking Distance Warning will turn on automatically when the gear is shifted to R (Reverse).
- If vehicle speed exceeds 19 mph (30 km/h), the function and indicator will turn off. When the gear is shifted to R (Reverse), even if the button is repressed, the warning will not turn off and the system will operate to assist safe parking.

Warning volume

With the ENGINE START/STOP button in the ON position, select 'Driver Assistance → Warning Volume' from the Settings menu to change the warning volume to 'High', 'Medium', 'Low' or 'Off' for Reverse Parking Distance Warning.

However, even if 'Off' is selected, the function volume will not turn off but the volume will sound as 'Low'.

If you change the warning volume, the warning volume of other Driver Assistance systems may change.

Function operation

Operating conditions

- This function will activate when backing up with the ignition switch ON. If the vehicle is moving at a speed over 3 mph (5 km/h), the function may not be activated correctly.
- The sensing distance while Reverse Parking Distance Warning is in operation is approximately 47 in. (120 cm).
- When more than two objects are sensed at the same time, the

closest one will be recognized first.

Types of warning sound and indicator

Distance from object	Warning indicator	Warning sound
24~48 in (60 ~120 cm)		Buzzer beeps intermittently
12~24 in (30~60 cm)		Buzzer beeps frequently
within 12 in (30 cm)		Buzzer beeps continuously

- The corresponding indicator will illuminate whenever each ultrasonic senor detects a object in its sensing range.
- If an object is within 12 in. (30 cm) from the ultrasonic sensors, the sensors may not detect the object, or a sensor out of the detecting range may warn the driver.
- Distance warning may not occur sequentially depending on vehicle speed or obstacle shape.
- Indicators and warning sounds may differ from the illustration when obstacles are located in the center of the sensor, obstacles are located in close proximity to the vehicle, or in various circumstances.
- The shape of the indicator in the illustration may differ from the actual vehicle.

Function malfunction and precautions

Function malfunction

Reverse Parking Distance Warning has a self-diagnosis function that can determine whether the ultrasonic sensor is working properly. After starting the engine, a beep will sound when the gear is shifted to P (Park) to indicate the function is operating normally.

However, if one or more of the following occurs, first check whether the ultrasonic senior is damaged or whether the function is in a non-operating condition. If it still does not work properly, , have the system inspected by an authorized Kia dealer.

- The audible warning does not sound.
- The buzzer sounds intermittently.
- The 'Ultrasonic sensor error or blockage' warning message appears on the cluster.

Function precautions

Reverse Parking Distance Warning may malfunction if the vehicle bumper height or ultrasonic sensor installation has been modified or damaged. Any non-factory installed equipment or accessories may also interfere with the sensor performance.

When the ultrasonic sensor is frozen or stained with snow, dirt, or water, the sensor may be not operate until the stains are removed using a soft cloth.

Do not push, scratch or strike the ultrasonic sensor. Sensor damage could occur.

Do not spray the ultrasonic sensors or its surrounding area directly with a high pressure washer.

Forward/Reverse Parking Distance Warning (PDW) (if equipped)

Forward/Reverse Parking Distance Warning will warn the driver by warning indicator or sound if person, animal, or object in certain range is detected from the front/rear ultrasonic sensors (1) when the vehicle is moving forward or backward at low speeds.

Detecting sensor

Front ultrasonic sensor

Rear ultrasonic sensor

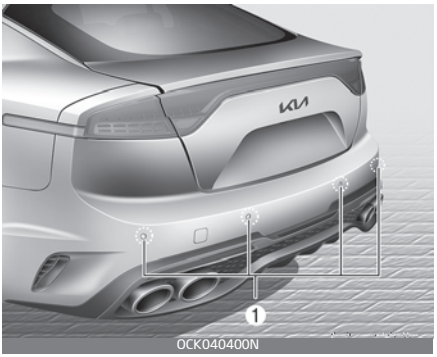

Refer to the picture above for the detailed location of the detecting sensor.

Function settings

Warning volume

- With the ENGINE START/STOP button in the ON position, select 'Driver Assistance → Warning Volume' from the Settings menu to change the warning volume to 'High', 'Medium', 'Low' or 'Off' for Forward/Reverse Parking Distance Warning.
- However, even if 'Off' is selected, the function volume will not turn off but the volume will sound as 'Low'.

"Auto On" Setting

- Parking Distance Warning Auto On is activated or deactivated when you select 'User Settings (LCD display) or Setup → Vehicle (Infotainment System screen) → Driver Assistance → Parking Safety → Parking Distance Warning Auto On'.

For more details, refer to "LCD display modes" on page 4-75.

If your vehicle is equipped with additional Infotainment System, please scan the QR code in a separately supplied Car Infotainment System Quick Reference Guide.

Function operation

PDW controller

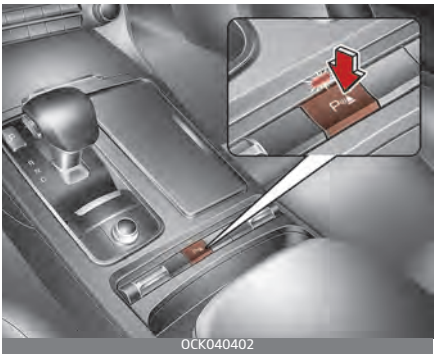

- Press Parking Safety button (P) to turn the function on and off.
- When the function is off (button indicator light off), if you shift the gear to R (Reverse), the function will automatically turn on.
- The Parking Safety (P) button indicator light will illuminate when the function operates. When the vehicle speed exceeds 19 mph (30 km/h), the function will turn off and the button indicator light will not illuminate.
- When the gear is shifted to R (Reverse), even if the button is repressed, the button indicator light will not turn off and the function will operate to assist safe parking.

Forward Parking Distance Warning

- Forward Parking Distance Warning activates in following 3 conditions:
  1. The vehicle is changed from R (Reverse) to D (Drive) when Forward/Reverse Parking Distance Warning is activated
  2. The vehicle is at D (Drive) position and PDW indicator is illuminated
  3. The gear is changed at D (Drive) position while 'Parking Distance Warning Auto ON' is selected
- Forward/Reverse Parking Distance Warning assists the driver during movement of the vehicle by chiming if any person, animal or object is sensed if the speed of your vehicle is below 6 mph (10 km/h).
- The function will not send a warning for an obstacle if the speed of your vehicle exceeds 6 mph (10 km/h). The warning function will be activated again when the speed drops below 6 mph (10 km/h).
- If you select 'Parking Distance Warning Auto ON' on the cluster or from the menu of the infotainment system, the indicator light will be kept on.
- If vehicle speed exceeds 19 mph (30 km/h) when 'Parking Distance Warning Auto ON' is deselected, the indicator will turn off and if the vehicle speed is below 6 mph (10 km/h), the function will not warn you.

Distance from object	Warning indicator When driving forward	Warning sound
24~40 in (60~100 cm)		Buzzer beeps intermittently
12~24 in (30~60 cm)		Buzzer beeps frequently
within 12 in (30 cm)		Buzzer beeps continuously

- When people, animal, or objects are detected, it is displayed on the cluster or infotainment system screen with an audible warning.
- When more than two people, animal, or objects are detected at the same time, the closest one will be warned with an audible warning.
- The shape of the indicator in the illustration may differ from the actual vehicle.

Reverse Parking Distance Warning

- Reverse Parking Distance Warning activates when the gear is R (Reverse) position.
- Reverse Parking Distance Warning assists the driver during reverse movement of the vehicle by chiming if any people, animal, or object is sensed when the vehicle speed is below 6mph (10km/h).

- The rear and front side sensors warn the driver when moving backward when the vehicle speed is below 6mph (10km/h). However, the object must be within 24 in. (60 cm) from the front-side sensors to operate.

Distance from object	Warning indicator When driving backward	Warning sound
24~48 in (60 ~120 cm)		Buzzer beeps intermittently
12~24 in (30~60 cm)		Buzzer beeps frequently
within 12 in (30 cm)		Buzzer beeps continuously

- When people, animal, or objects are detected, it is displayed on the cluster or infotainment system screen with an audible warning.
- When more than two people, animal, or objects are detected at the same time, the closest one will be alerted with an audible warning.
- The shape of the indicator in the illustration may differ from the actual vehicle.

Function malfunction and limitations

Function malfunction

After starting the engine, a beep will sound when the gear is shifted to R (Reverse) to indicate the function is operating normally.

However, if one or more of the following occurs, first check whether the ultrasonic senior is damaged or whether the function is in a non-operating condition. If it still does not work properly, have the system inspected by an authorized Kia dealer.

- The audible warning does not sound.
- The buzzer sounds intermittently.
- The 'Ultrasonic sensor error or blockage' warning message appears on the cluster.

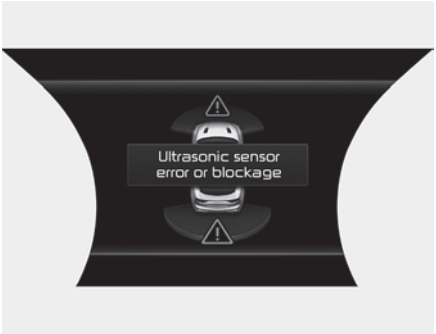

OCK040551L

⚠ WARNING

- Always look around your vehicle to make sure there are no objects or obstacles before moving the vehicle in any direction to prevent a collision.
- Your new vehicle warranty does not cover any accidents or damage to the vehicle or injuries to its occupants related to a Reverse Parking Distance Warning.
- Always pay close attention when the vehicle is driven close to objects, particularly pedestrians, and especially children. Be aware that some objects may not be visible on the screen or be detected by the sensors, due to the objects distance, size or material, all of which can limit the effectiveness of the sensor.
- Forward/Reverse Parking Distance Warning may not operate normally when:
  - Moisture is frozen to the sensor. (It will operate normally when the ice melts.)
  - Sensor is covered with foreign matter, such as snow or water, or the sensor cover is blocked. (It will operate normally when the material is removed or the sensor is no longer blocked.)
  - Outside air temperature is extremely hot or cold.
  - Radar components are arbitrarily removed.
  - The sensor is pushed, scratched or struck with any hard and sharp objects that could damage the surface.
  - High pressure water is directly applied to ultrasonic sensor.
  - Heavy rain or water spray is present.
  - The sensor is covered with snow.
  - Wireless transmitters or mobile phones present near the sensor.
  - Heavy rain or water spray is present.
  - Driving on uneven road surfaces such as unpaved roads, gravel, bumps, or gradient.
  - Wireless transmitters or mobile phones present near the sensor.
  - Accessories, such as license plate molding or sticker, are installed on the sensor area.
  - The vehicle bumper height or sensor installation has been modified.
  - Any non-factory equipment or accessories have been installed.
- The following objects may not be recognized by the sensor:
  - Sharp or slim objects such as ropes, chains or small poles.
  - Undetectable objects smaller than 40 in (100 cm) and narrower than 5.5 in (14 cm) in diameter.

  - Objects, which tend to absorb sensor frequency such as clothes, spongy material or snow.
  - People, animal or objects located very close to the sensor
- The indicator may operate differently when the people, animal or obstacle is located between sensors.
- Parking Distance Warning may not occur sequentially depending on vehicle speed or obstacle shape.
- If it does not work properly, have your vehicle inspected by an authorized Kia dealer.

Lighting

Battery saver function

- The purpose of this feature is to prevent the battery from being discharged if the lights are left in the ON position. The system automatically shuts off the parking lights 30 seconds after the ENGINE START/STOP button is turned off and the driver's door is opened and closed.
- With this feature, the parking lights will turn off automatically if the driver parks on the side of the road at night and opens the driver's side door.
  If necessary, to keep the parking lights on when the ENGINE START/STOP button is turned off, perform the following:
  1. Open the driver-side door.
  2. Turn the parking lights OFF and ON again using the light switch on the steering column.

Headlight (Headlamp) escort function

If you press the ENGINE START/STOP button to the ACC or OFF position with the head lights ON, the headlights remain on for about 5 minutes. However, if the driver's door is opened and closed, the headlights are turned off after 15 seconds.

The headlights can be turned off by pressing the lock button on the transmitter (or smart key) twice or turning the light switch to the OFF position.

Headlight escort function is activated or deactivated when you select 'User Settings (LCD display) or Setup → Vehicle (Infotainment System screen) → Lights → Headlight Delay' from the Settings menu in the cluster LCD display or the Infotainment System screen.

* For more details, refer to "LCD display modes" on page 4-75.

If your vehicle is equipped with additional Infotainment System, please scan the QR code in a separately supplied Car Infotainment System Quick Reference Guide.

Lighting control

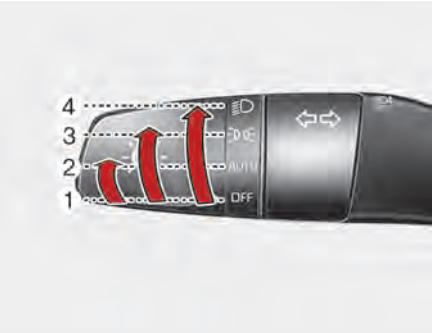

OCK040510N

The light switch has a Headlight and a Parking light position.

To operate the lights, turn the knob at the end of the control lever to one of the following positions:

1. OFF position
2. Auto light position
3. Parking & Tail light
4. Headlight position

Daytime running light

The Daytime Running Lights (DRL) can make it easier for others to see the front of your vehicle during the day. DRL can be helpful in many different driving conditions, and it is especially helpful after dawn and before sunset.

The DRL system will turn the dedicated lamp OFF when :

1. The tail light is on
   - It includes that the tail light is on in the dark when the light switch is in the auto light position.
2. The engine is off
3. Engaging the Parking Brake

Parking & Tail light

OCK040511N

When the light switch is in the parking light position, the tail, license and parking lights will turn ON.

Headlight position

OCK040512N

When the light switch is in the headlight position, the head, tail, license lights will turn ON.

NOTICE

The ignition switch must be in the ON position to turn on the headlights.

Auto light

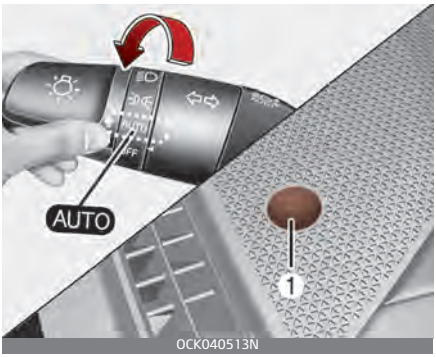

OCK040513N

When the light switch is in the AUTO light position, the taillights and headlights will turn ON or OFF automatically depending on the amount of light outside the vehicle.

CAUTION

- Never place anything over the sensor (1) located on the instrument panel, this will ensure better auto-light system control.
- Don't clean the sensor using a window cleaner, the cleaner may leave a light film which could interfere with sensor operation.
- If your vehicle has window tint or other types of metallic coating on the front windshield, the Auto light system may not work properly.

High beam operation

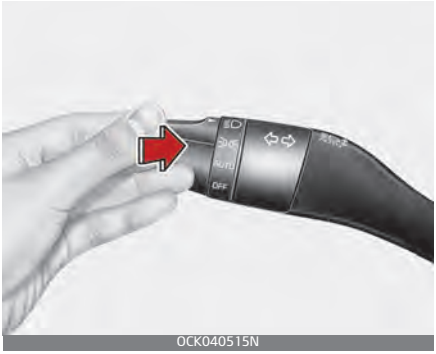

OCK040515N

To turn on the high beam headlamp, push the lever away from you when the headlight is on.

The high beam indicator will light when the headlight high beams are switched on.

To prevent the battery from being discharged, do not leave the lights on for a prolonged time while the engine is not running.

WARNING

Do not use high beam when there are other vehicles. Using high beam could obstruct the other driver's vision.

OCK040514N

To flash the headlights, pull the lever towards you. It will return to the normal (low beam) position when released. The headlight switch does not need to be on to use this flashing feature.

High Beam Assist (HBA)

OCK040677N

High Beam Assist is a function that automatically adjusts the headlamp range (switches between high beam and low beam) depending on the brightness of detected vehicles and certain road conditions.

Detecting sensor

Front view camera

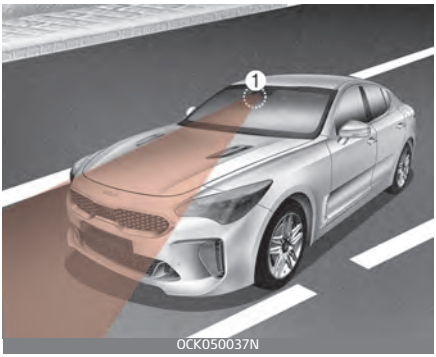

OCK050037N

The front view camera (1) is used as a detecting sensor to detect ambient light and brightness while driving. Refer to the picture above for the detailed location of the detecting sensor.

✻ NOTICE

Always keep the front view camera in good condition to maintain optimal performance of High Beam Assist.

For more details on the precautions of the front view camera, refer to "Forward Collision-Avoidance Assist (FCA) (Sensor fusion)" on page 5-65.

Function setting

Setting

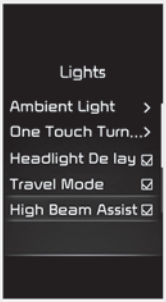

OCK040654L

By selecting as 'User Settings (LCD display) or Setup → Vehicle (Infotainment System screen) → Lights → High Beam Assist' on the cluster LCD display or the Infotainment System screen at engine ON, you may select or release the function. The settings will remain even if engine OFF and ON.

For more details, refer to "LCD display" on page 4-75.

If your vehicle is equipped with additional Infotainment System, please scan the QR code in a separately supplied Car Infotainment System Quick Reference Guide.

⚠ WARNING

For your safety, change the Settings after parking the vehicle at a safe location.

Function operation

Display and control

- After selecting 'High Beam Assist' in the Settings menu, High Beam Assist will operate by following the procedure below.
  - Place the headlamp switch in the AUTO position and push the headlamp switch towards the instrument cluster. The High Beam Assist (AUTO) indicator light will illuminate on the cluster and the function will be enabled.
  - When the function is enabled, high beam will turn on when vehicle speed is above 40 km/h (25 mph). When vehicle speed is below 25 km/h (15 mph), high beam will not turn on.
  - The High Beam ( ) indicator light will illuminate on the cluster when high beam is on.
- When High Beam Assist is operating, if the headlamp switch or switch is used, the function operates as follow:
  - If the headlamp switch is pulled towards you when the high beam is off, the high beam will turn on without High Beam Assist canceled. When you let go of the headlamp switch, the switch will move to the middle and the high beam will turn off.
  - If you push the light switch towards the instrument cluster, high beam is turned on and High Beam Assist is released.
  - If the headlamp switch is placed from AUTO to another position (headlamp/position/off), High Beam Assist will turn off and the corresponding lamp will turn on.
- When High Beam Assist is operating, high beam switches to low beam if any of the following conditions occur:
  - When the headlamp of an oncoming vehicle is detected.
  - When the tail light of a vehicle in front is detected.
  - When the headlamp or tail light of a motorcycle or a bicycle is detected.
  - When the surrounding ambient light is bright enough that high beams are not required.
  - When streetlights or other lights are detected.

Function malfunction and limitations

Function malfunction

When High Beam Assist is not working properly, the 'Check High Beam Assist (HBA) system' warning message will appear on the cluster (turns off after a certain time) and (⚠) warning light will illuminate.

If this occurs, we recommended that the function be inspected by an authorized Kia dealer.

Limitations of the function

High Beam Assist may not work properly in the following situations:

- Light from a vehicle is not detected because of lamp damage, or because it is hidden from sight, etc.
- Headlamp of a vehicle is covered with dust, snow or water.
- A vehicle's headlamps are off but the fog lamps are on and etc.
- There is a lamp that has a similar shape as a vehicle's lamp.
- Headlamps have been damaged or not repaired properly.
- Headlamps are not aimed properly.
- Driving on a narrow curved road, rough road, uphill or downhill.
- Vehicle in front is partially visible on a crossroad or curved road.
- There is a traffic light, reflecting sign, flashing sign or mirror ahead.
- There is a temporary reflector or flash ahead (construction area).
- The road conditions are bad such as being wet, iced or covered with snow.
- A vehicle suddenly appears from a curve.
- The vehicle is tilted from a flat tire or is being towed.
- Light from a vehicle is not detected because of exhaust fume, smoke, fog, snow, etc.

NOTICE

For more details on the limitations of the front view camera, refer to "Forward Collision-Avoidance Assist (FCA) (Sensor fusion)" on page 5-65.

WARNING

- At times, High Beam Assist may not work properly. The function is for your convenience only. It is the

responsibility of the driver for safe driving practices and always check the road conditions for your safety.

- When High Beam Assist does not operate normally, change the headlamp position manually between high beam and low beam.

Turn signals and lane change signals

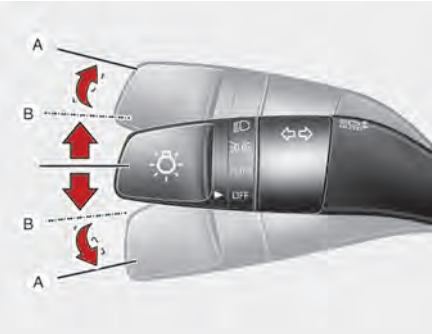

OCK040516N

The ENGINE START/STOP button must be on for the turn signals to function. To turn on the turn signals, move the lever up or down (A). The green arrow indicators on the instrument panel indicate which turn signal is operating. They will self-cancel after a turn is completed. If the indicator continues to flash after a turn, manually return the lever to the OFF position.

To signal a lane change, move the turn signal lever slightly and hold it in position (B). The lever will return to the OFF position when released.

If an indicator stays on and does not flash or if it flashes abnormally, one of the turn signal bulbs may be burned out and will require replacement.

One-touch Turn signal lamp

When you change lanes, even if the turn signal lamp lever returns to its original position after move the turn signal lever slightly to B position, the turn signal lamp will blink 3 times (or 5, 7 times).

This is a feature that helps you continue to operate even if you are not holding the turn signal lever when changing lanes. You may change the number of blink (3, 5 or 7 times) or deactivate the one touch turn signal lamp function from the cluster LCD display or the Infotainment System screen as 'User Settings (LCD dis play) or Setup → Vehicle (Infotainment system screen) → Lights → One Touch Turn Signal'.

For more details, refer to "LCD display modes" on page 4-75.

If your vehicle is equipped with additional Infotainment System, please scan the QR code in a separately supplied Car Infotainment System Quick Reference Guide.

NOTICE

If an indicator flash is abnormally quick or slow, a bulb may be burned out or have a poor electrical connection in the circuit.

Headlight leveling device (if equipped)

Automatic type

It automatically adjusts the headlight beam level according to the number of passengers and loading weight in the luggage area. And it offers proper headlight beam under various conditions.

WARNING

If it does not work properly even though your car is inclined backward according to passenger's posture, or the headlight beam is irradiated to the high or low position, have the system be inspected by an authorized Kia dealer.
Do not attempt to inspect or replace the wiring yourself.

Dynamic Bending Light (DBL) (if equipped)

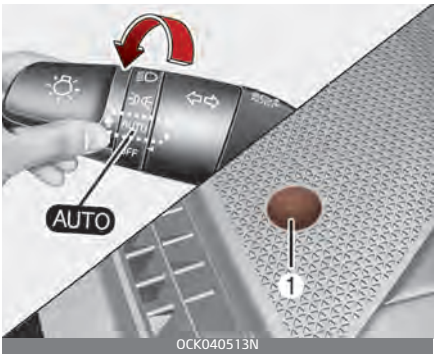

Dynamic Bending Light uses the steering angle and vehicle speed, to keep your field of vision wide by swiveling and leveling the headlamp.

Change the switch to the AUTO position when the engine is running. The dynamic Bending Light will operate when the headlamp is ON. To turn off the DBL, change the switch to other positions. After turning the DBL off, headlamp swiveling no longer occurs, but leveling operates continuously.

If the DBL malfunction indicator comes on, the DBL is not working properly. Drive to the nearest safe location and restart the engine. If the indicator continuously remains on, have your vehicle checked by an authorized Kia dealer as soon as possible.

Wipers and washers

Windshield wiper/washer

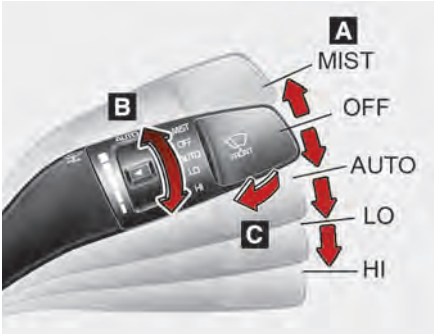

OCK040417N

A : Wiper speed control (front)

- MIST – Single wipe
- OFF – Off
- AUTO – Auto control wipe (Rain sensor)
- LO – Low wiper speed
- HI – High wiper speed

B : Intermittent control wipe time adjustment

C : Wash with brief wipes (front)*

Windshield wipers

Operates as follows when the ignition switch is turned ON.

MIST : For a single wiping cycle, move the lever to this (MIST) position and release it. The wipers will operate continuously if the lever is held in this position.

OFF : Wiper is not in operation

LO : Normal wiper speed

HI : Fast wiper speed

NOTICE

If there is heavy accumulation of snow or ice on the windshield, defrost the windshield for about 10 minutes, or until the snow and/or ice is removed before using the windshield wipers to ensure proper operation.

If you do not remove the snow and/or ice before using the wiper and washer, it may damage the wiper and washer system.

Auto control

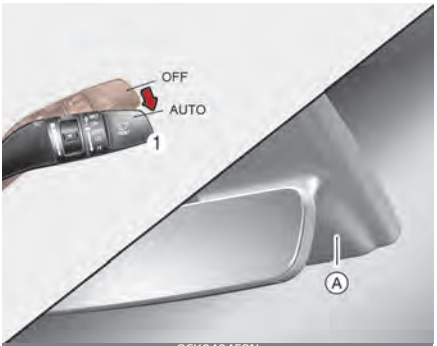

OCK040458N

The rain sensor (A) located on the upper end of the windshield glass senses the amount of rainfall and controls the wiping cycle for the proper interval. The more it rains, the faster the wiper operates. When the rain stops, the wiper stops.

To vary the speed setting, turn the speed control knob (1).

If the wiper switch is set in AUTO mode when the ignition switch is ON, the wiper will operate once to perform a self-check of the system. Set the wiper to OFF position when the wiper is not in use.

⚠ WARNING

When the ignition switch is ON and the windshield wiper switch is placed in the AUTO mode, use caution in the following situations to avoid any injury to the hands or other parts of the body:

- Do not touch the upper end of the windshield glass facing the rain sensor.
- Do not wipe the upper end of the windshield glass with a damp or wet cloth.
- Do not put pressure on the windshield glass.

⚠ CAUTION

- When washing the vehicle, set the wiper switch in the OFF position to stop the auto wiper operation.
  The wiper may operate and be damaged if the switch is set in the AUTO mode while washing the vehicle.
- Do not remove the sensor cover located on the upper end of the passenger side windshield glass. Damage to system parts could occur and may not be covered by your vehicle warranty.
- When starting the vehicle in winter, set the wiper switch in the OFF position. Otherwise, wipers may operate and ice may damage the windshield wiper blades. Always remove all snow and ice and defrost the windshield properly prior to operating the windshield wipers.

Front windshield washers

OCK040419

In the OFF position, pull the lever gently toward you to spray washer fluid on the windshield and to run the wipers 1-3 cycles.

Use this function when the windshield is dirty.

The spray and wiper operation will continue until you release the lever.

If the washer does not work, check the washer fluid level. If the fluid level is not sufficient, you will need to add appropriate non-abrasive windshield washer fluid to the washer reservoir.

The reservoir filler neck is located in the front of the engine compartment on the passenger side.

⚠ CAUTION

Washer pump

To prevent possible damage to the washer pump, do not operate the washer when the fluid reservoir is empty.

⚠ WARNING

Obscured visibility

Do not use the washer in freezing temperatures without first warming the windshield with the defrosters; the washer solution could freeze on the windshield and obscure your vision.

⚠ CAUTION

Wipers & windshields

- To prevent possible damage to the wipers or windshield, do not operate the wipers when the windshield is dry.
- To prevent damage to the wiper blades, do not use gasoline, kerosene, paint thinner, or other solvents on or near them.
- To prevent damage to the wiper arms and other components, do not attempt to move the wipers manually.

Interior light

⚠ CAUTION

Do not use the interior lights for extended periods when the engine is not running.

It may cause battery discharge.

⚠ WARNING

Do not use the interior lights when driving in the dark. Accidents could happen because the view may be obscured by interior lights.

Automatic turn off function (if equipped)

The interior lights automatically turn off approximately 20 minutes after the ENGINE START/STOP button is turned off.

If your vehicle is equipped with the theft alarm system, the interior lights automatically turns off approximately 5 seconds after the system is armed stage.

Map lamp

Type A

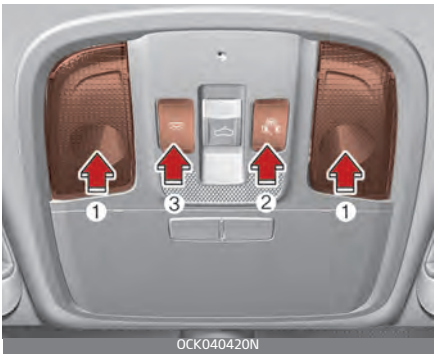

Type B

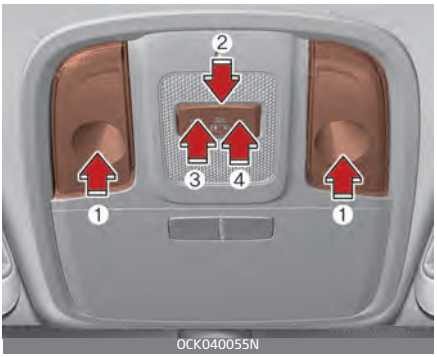

- (1): Press the lamps to turn the front map lamps on and off.
- DOOR (2):
  - The map lamp and room lamp comes on when a door is opened. The lamps go out after approximately 30 seconds.
  - The map lamp and room lamp comes on for approximately 30 seconds when doors are unlocked with a transmitter or smart key as long as the doors are not opened.
  - The map lamp and room lamp will stay on for approximately 20 minutes if a door is opened with the ENGINE START/STOP button in the ACC or OFF position.
  - The map lamp and room lamp will stay on continuously if the door is opened with the ENGINE START/STOP button in the ON position.
  - The map lamp and room lamp will go out immediately if the ENGINE START/STOP button is changed to the ON position or all doors are locked.
  - To turn off the DOOR mode, press the DOOR button (2) once again (not pressed).

NOTICE

The DOOR mode and ROOM mode can not be selected at a time.

- Type A
  ON (3): Press this switch to turn the front and rear room lamps on and off.
- Type B
  ON (3): Press this switch to turn the front and rear room lamps on.
  OFF (4): Press this switch to turn the front and rear room lamps off.

Room lamp

OCK040421

- : The light stays on at all times.

Liftgate room lamp

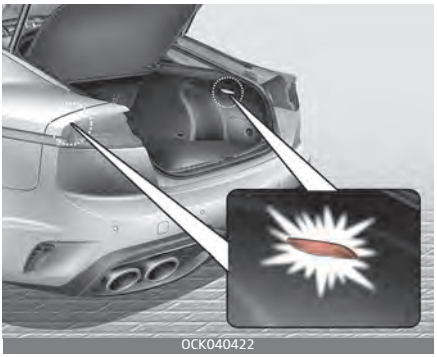
OCK040422

The liftgate room lamp comes on when the liftgate is opened.

⚠ CAUTION

The liftgate room lamp comes on as long as the liftgate lid opens. To prevent unnecessary charging system drain, close the liftgate lid securely after using the liftgate room.

Door courtesy lamp (Front seat)

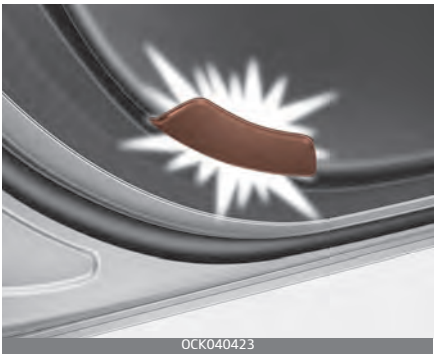
OCK040423

The door courtesy lamp comes ON when the door is opened to assist entering or exiting the vehicle. It also serves as a warning to passing vehicles that the vehicle door is open.

Glove box lamp

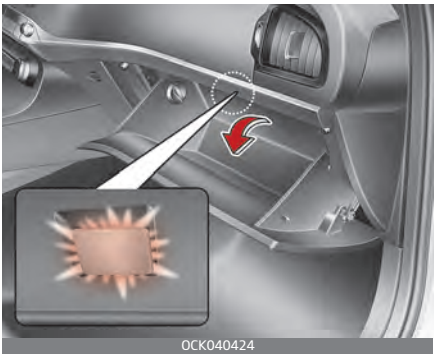
OCK040424

The glove box lamp comes on when the glove box is opened.

⚠ CAUTION

To prevent unnecessary charging system drain, close the glove box securely after using the glove box.

Vanity mirror lamp

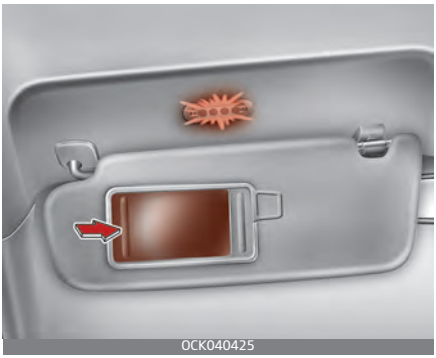
OCK040425

Opening the lid of the vanity mirror will automatically turn on the mirror light.

⚠ CAUTION

Vanity mirror lamp

Always have the switch in the off position when the vanity mirror lamp is not in use. If the sun visor is closed without the lamp off, it may discharge the battery or damage the sun visor.

Welcome system

Welcome light

OCK040426N

When all the doors (and liftgate) are locked and closed, the pocket lamp and puddle lamp, room lamp will come on for about 15 seconds if any of the below is performed.

- When the vehicle is approached with the smart key in possession.

Welcome light (Enable on Driver Approach) is activated or deactivated when you select "User Settings (LCD display) or Setup → Vehicle (Infotainment System screen) → Convenience → Welcome mirror/light' from the Settings menu in the in the cluster LCD display or the Infotainment System screen.

For more details, refer to "LCD display modes" on page 4-75.

If your vehicle is equipped with additional Infotainment System, please scan the QR code in a separately

supplied Car Infotainment System Quick Reference Guide.

Escort welcome (if equipped)

When the headlight (light switch in the headlight or AUTO position) is on and all doors (and) are locked and closed, the position light and headlight will come on for 15 seconds if any of the below is performed.

- When the door unlock button is pressed on the smart key.

At this time, if you press the door lock or unlock button, the position light and headlight will turn off immediately.

Interior light

When the interior light switch is in the DOOR position and all doors (and liftgate) are locked and closed, the room lamp will come on for 30 seconds if any of the below is performed.

- When the door unlock button is pressed on the smart key.
- When the button of the outside door handle is pressed.

At this time, if you press the door lock or unlock button, the room lamp will turn off immediately.

Defroster

⚠ CAUTION

To prevent damage to the conductors bonded to the inside surface of the rear window, never use sharp instruments or window cleaners containing abrasives to clean the window.

✻ NOTICE

If you want to defrost and defog the front windshield, refer to "Windshield defrosting and defogging" on page 4-156.

Rear window defroster

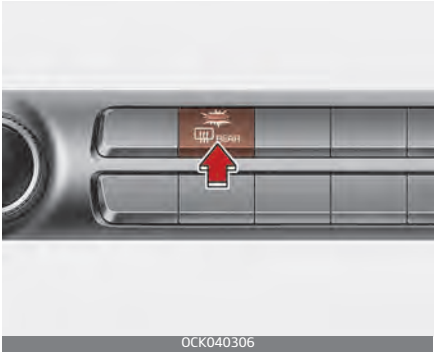

The defroster heats the window to remove frost, fog and thin ice from the rear window, while the engine is running.

To activate the rear window defroster, press the rear window

defroster button located in the center facia switch panel. The indicator on the rear window defroster button illuminates when the defroster is ON.

If there is heavy accumulation of snow on the rear window, brush it off before operating the rear defroster.

The rear window defroster automatically turns off after approximately 20 minutes or when the ENGINE START/STOP button is turned off. To turn off the defroster, press the rear window defroster button again.

Outside rearview mirror defroster

If your vehicle is equipped with the outside rearview mirror defrosters, they will operate at the same time you turn on the rear window defroster.

Climate control system

System operation

Ventilation

1. Set the mode to the position.
2. Set the air intake control to the outside (fresh) air position.
3. Set the temperature control to the desired position.
4. Set the fan speed control to the desired speed.

Heating

1. Set the mode to the position.
2. Set the air intake control to the outside (fresh) air position.
3. Set the temperature control to the desired position.
4. Set the fan speed control to the desired speed.
5. If dehumidified heating is desired, turn the air conditioning system on.

Operation Tips

- To keep dust or unpleasant fumes from entering the vehicle through the ventilation system, temporarily set the air intake control to the recirculated air position. Be sure to return the control to the fresh air position when the irritation has passed to keep fresh air

in the vehicle. This will help keep the driver alert and comfortable.

- Air for the heating/cooling system is drawn in through the grilles just ahead of the windshield. Care should be taken that these are not blocked by leaves, snow, ice or other obstructions.
- To prevent interior fog on the windshield, set the air intake control to the fresh air position and fan speed to the desired position, turn on the air conditioning system, and adjust the temperature control to desired temperature.
- If the windshield fogs up, set the mode to the or position.

⚠ CAUTION

Operating the blower when the ENGINE START/STOP button is in the ON position could cause the battery to discharge. Operate the blower when the engine is running.

Air conditioning

Kia air conditioning systems are filled with R-1234yf refrigerant.

1. Start the engine. Push the air conditioning button.
2. Set the mode to the position.
3. Set the air intake control to the outside air or recirculated air position.
4. Adjust the fan speed control and temperature control to maintain maximum comfort.

Your vehicle is filled with R-1234yf according to the regulation in your country at the time of production.You can find out which air conditioning refrigerant is applied to your vehicle on the label located inside of the hood. Refer to "Refrigerant label" on page 8-12. for the location of the air conditioning refrigerant label.

⚠ CAUTION

- The refrigerant system should only be serviced by trained and certified technicians to insure proper and safe operation.
- The refrigerant system should be serviced in a well-ventilated place.
- The air conditioning evaporator (cooling coil) shall never be repaired or replaced with one removed from a used or salvaged vehicle and new replacement MAC evaporators shall be certified (and labeled) as meeting SAE Standard J2842.

✻ NOTICE

- When using the air conditioning system, monitor the temperature gauge closely while driving up hills or in heavy traffic when outside

temperatures are high. Air conditioning system operation may cause engine overheating. Continue to use the blower fan but turn the air conditioning system off if the temperature gauge indicates engine overheating.
- When opening the windows in humid weather air conditioning may create water droplets inside the vehicle. Since excessive water droplets may cause damage to electrical equipment, air conditioning should only be used with the windows closed.

Air conditioning system operation tips

- If the vehicle has been parked in direct sunlight during hot weather, open the windows for a short time to let the hot air inside the vehicle escape.
- Use air conditioning to reduce humidity and moisture inside the vehicle on rainy or humid days.
- During air conditioning system operation, you may occasionally notice a slight change in engine speed as the air conditioning compressor cycles. This is a normal system operation characteristic.
- Use the air conditioning system every month only for a few minutes to ensure maximum system performance.
- When using the air conditioning system, you may notice clear water dripping (or even puddling) on the ground under the passenger side of the vehicle. This is a normal system operation characteristic.
- Operating the air conditioning system in the recirculated air position provides maximum cooling, however, continual operation in this mode may cause the air inside the vehicle to become stale.
- During cooling operation, you may occasionally notice a misty air flow because of rapid cooling and humid air intake. This is a normal system operation characteristic.

Climate control air filter

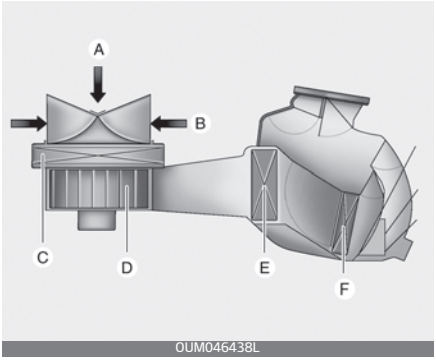

A: Outside air

B: Recirculated air

C: Climate control air filter

D: Blower

E: Evaporator core

F: Heater core

The climate control air filter installed behind the glove box filters the dust or other pollutants that come into the vehicle from the outside through the heating and air conditioning system.

If dust or other pollutants accumulate in the filter over a period of time, the air flow from the air vents may decrease, resulting in moisture accumulation on the inside of the windshield even when the outside (fresh) air position is selected. If this happens, have the climate control air filter replaced by an authorized Kia dealer.

NOTICE

- Replace the filter according to the Maintenance Schedule.
  If the car is being driven in severe conditions such as dusty, rough roads, more frequent climate control air filter inspections and changes are required.
- When the air flow rate suddenly decreases, the system should be checked at an authorized Kia dealer.

Air Conditioning refrigerant label

OKA4040574N

* The actual Air Conditioning refrigerant label in the vehicle may differ from the illustration.

Each symbols and specification on air conditioning refrigerant label means as below;

1. Classification of refrigerant
2. Amount of refrigerant
3. Classification of Compressor lubricant
4. Caution
5. Flammable Refrigerant
6. To requires Registered Technician to service Air Conditioning system
7. Service manual

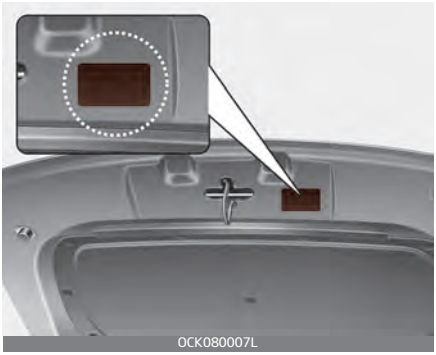

The refrigerant label is located on the underside of the hood.

Checking the amount of air conditioner refrigerant and compressor lubricant

When the amount of refrigerant is low, the performance of the air conditioning is reduced. Overfilling also has a bad influence on the air conditioning system.

Therefore, if abnormal operation is found, have the system inspected by a professional workshop.

Have your vehicle checked by an authorized Kia dealer.

⚠ WARNING

Vehicles equipped with R-1234yf

Since the refrigerant is mildly flammable and operated at high pressure, the air conditioning system should only be serviced by trained and certified technicians.

It is important that the correct type and amount of oil and refrigerant are used.

All refrigerants should be reclaimed with proper equipment.

Venting refrigerants directly to the atmosphere is harmful to individuals and environment.

Failure to heed these warnings can lead to serious injuries.

Automatic climate control system

Front seat

OCK047300

Rear seat

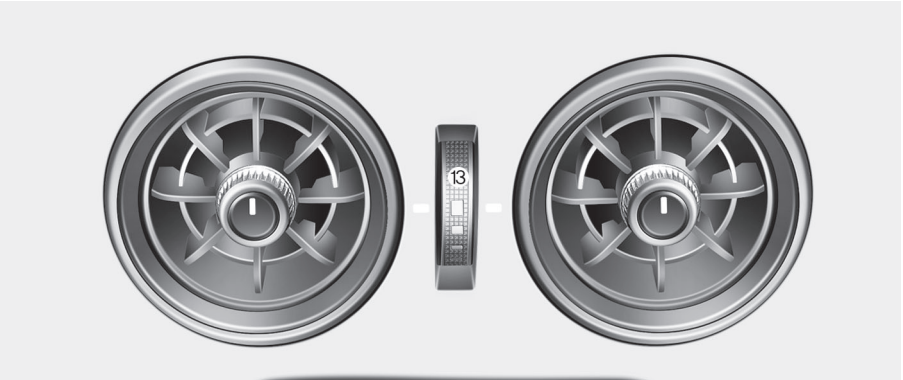

OCK047322

System Overview

1. Driver’s temperature control knob
2. AUTO (automatic control) button
3. Front windshield defroster button
4. Rear window defroster button
5. Air conditioning button
6. Air intake control button
7. OFF button
8. Fan speed control button
9. Mode selection button
10. Passenger's temperature control knob
11. SYNC temperature control selection button
12. Climate control display
13. Rear temperature control knob

Automatic heating and air conditioning

1. Press the AUTO button. The modes, fan speeds, air intake and air-conditioning will be controlled automatically according to the temperature setting.

OCK040307

2. Turn the temperature control knob to the desired temperature.

Driver's side/Passenger's side

OCK040311

NOTICE

- To turn the automatic operation off, select any button or switch of the following:
  - Mode selection button
  - Air conditioning button
  - Front windshield defroster button (Press the button one more time to deselect the front windshield defroster function. The 'AUTO' sign will illuminate on the information display once again.)
  - Air intake control button
  - Fan speed control button

  The selected function will be controlled manually while other functions operate automatically.
- For your convenience and to improve the effectiveness of the climate control, use the AUTO button and set the temperature to 73°F (23°C)

✻ NOTICE

Never place anything over the sensor located on the instrument panel to ensure better control of the heating and cooling system.

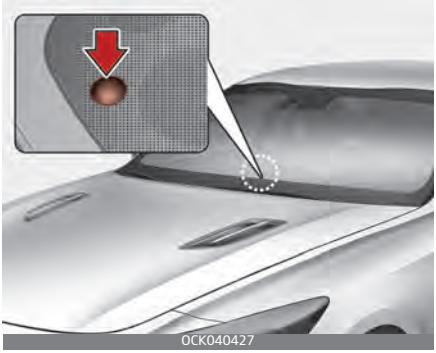

Mode selection

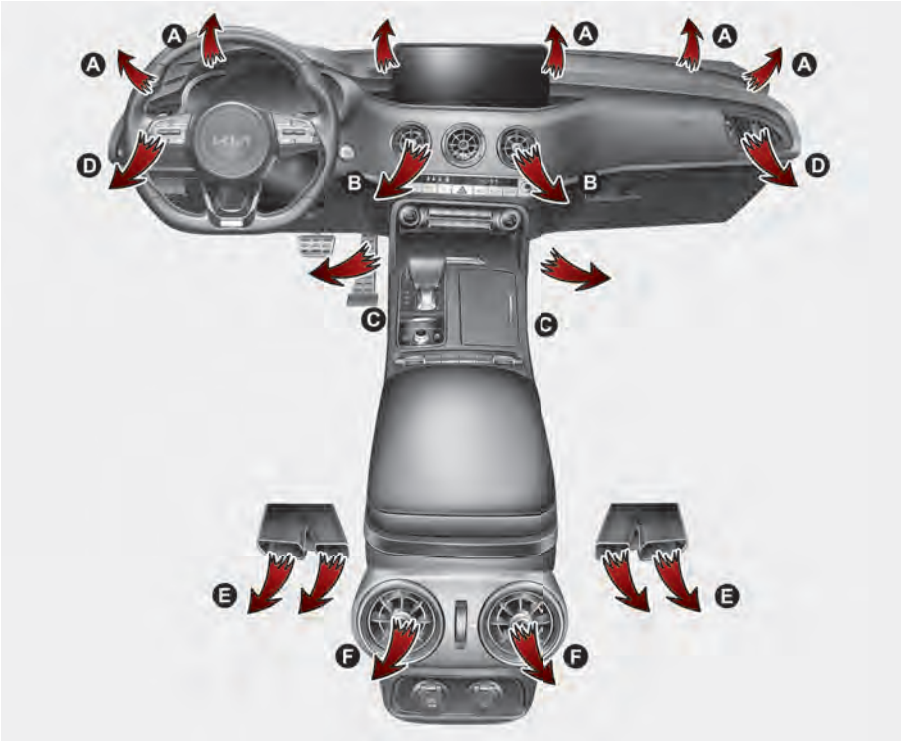

OCK040309N

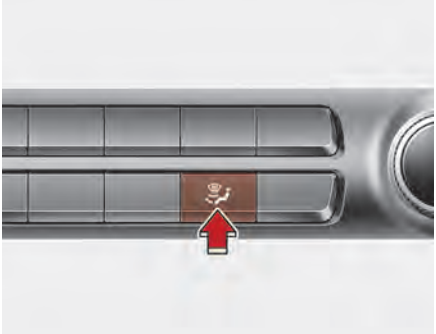

OCK040308

The mode selection button controls the direction of the air flow through the ventilation system.

The air flow outlet port is converted as follows:

Face-Level

Air flow is directed toward the upper body and face. Additionally, each outlet can be controlled to direct the air discharged from the outlet.

Bi-Level

Air flow is directed towards the face and the floor.

Floor-Level

Most of the air flow is directed to the floor, with a small amount of the air being directed to the windshield and side window defrosters.

Floor/Defrost-Level

Most of the air flow is directed to the floor and the windshield with a small amount directed to the side window defrosters.

NOTICE

2nd row outlet vents (E,F)

- The air flow of the 2nd row outlet vents is controlled by the front climate control system and delivered through the inside air duct of the floor (E, F).
- The air flow of the 2nd row outlet vents (E, F) may be weaker than the instrument panel vents for the long air duct.

Defrost-Level

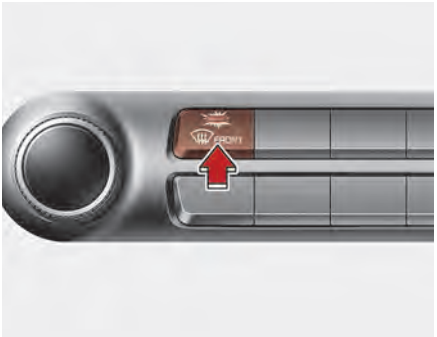

OCK040310

Most of the air flow is directed to the windshield with a small amount of air directed to the side window defrosters.

Instrument panel vents

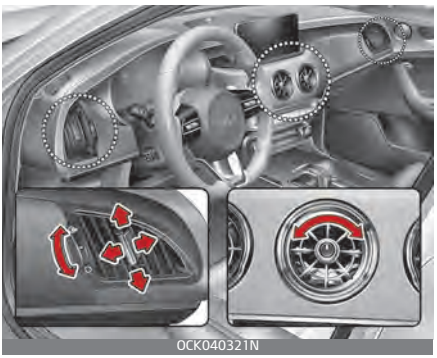

OCK040321N

The outlet vents can be opened or closed separately using the thumbwheel.

Also, you can adjust the direction of air delivery from these vents using the vent control lever as shown.

Temperature control

Front seat

OCK040311

Rear seat

OCK040323

- Front seat

The temperature will increase to the maximum (HI) by turning the knob to the extreme right.

The temperature will decrease to the minimum (Lo) by turning the knob to the extreme left.

When turning the knob, the temperature will increase or decrease by 1 ℉/0.5 ℃. When set to the lowest temperature setting, the air conditioning will operate continuously.

- Rear seat

Turn the rear seat temperature control knob to adjust temperature.

The front and rear seat side temperature is adjusted individually.

Adjusting the driver and passenger side temperature equally

OCK040312

- Press the "SYNC" button to adjust the driver and passenger side temperature equally.
  The passenger side temperature will be set to the same temperature as the driver side temperature.
- Turn the driver side temperature control knob. The driver and passenger side temperature will be adjusted equally.

Adjusting the driver and passenger side temperature individually

- Press the "SYNC" button again to adjust the driver and passenger side temperature individually. The illumination of button turns off.
- Operate the driver side temperature control knob to adjust the driver side temperature.
- Operate the passenger side temperature control knob to adjust the passenger side temperature.

Temperature conversion (°C↔°F)

You can switch the temperature mode between Centigrade to Fahrenheit as follows;

While pressing the OFF button, depress the AUTO button for 3 seconds or more.The display will change from Centigrade to Fahrenheit, or from Fahrenheit to Centigrade.

Air intake control

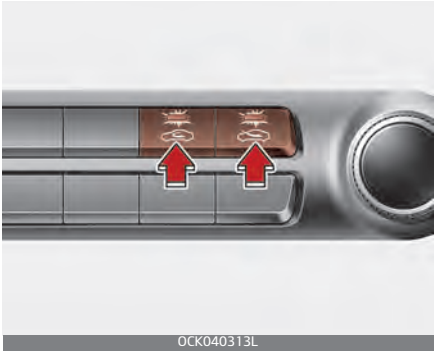
OCK040313L

This is used to select the outside (fresh) air position or recirculated air position.

To change the air intake control position, push the control button.

Recirculated air position

With the recirculated air position selected, air from the passenger compartment will be drawn through the heating system and heated or cooled according to the function selected.

Outside (fresh) air position

With the outside (fresh) air position selected, air enters the vehicle from outside and is heated or cooled according to the function selected.

NOTICE

Prolonged operation of the heater in the recirculated air position (without air conditioning selected) may cause fogging of the windshield and side windows and the air within the passenger compartment may become stale.

In addition, prolonged use of the air conditioning with the recirculated air position selected will result in

excessively dry air in the passenger compartment.

⚠ WARNING

- Continue using the climate control system in the recirculated air position may allow humidity to increase inside the vehicle which may fog the glass and obscure visibility.
- Do not sleep in a vehicle with the air conditioning or heating system on. It may cause serious harm or death due to a drop in the oxygen level and/or body temperature.
- Continue using the climate control system in the recirculated air position can cause drowsiness or sleepiness, and loss of vehicle control. Set the air intake control to the outside (fresh) air position as much as possible while driving.

Fan speed control

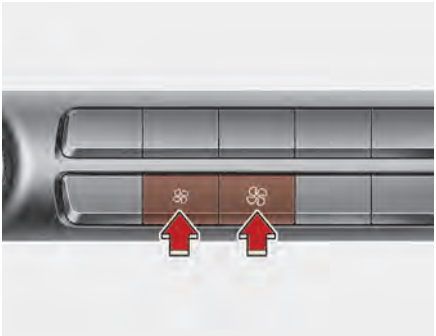

OCK040314

The fan speed can be set to the desired speed by pushing the fan speed control button.

The higher the fan speed is, the more air is delivered.

Pressing the OFF button turns off the fan.

Air conditioning

OCK040315

Press the A/C button to turn the air conditioning system on (indicator light will illuminate).

Press the button again to turn the air conditioning system off.

OFF mode

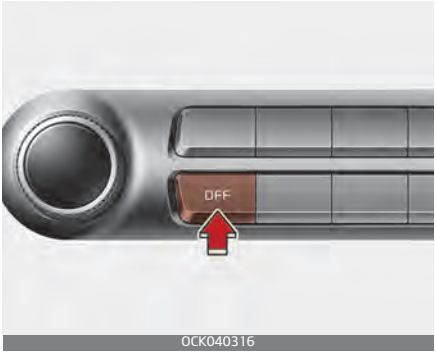

OCK040316

Press the front blower OFF button to turn off the front air climate control system. However, you can still operate the mode and air intake buttons as long as the ENGINE START/STOP button is in the ON position.

Climate information screen selection

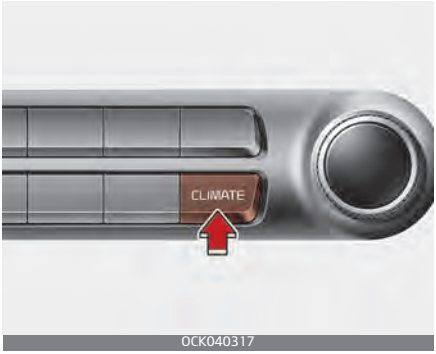

OCK040317

Press the climate information screen selection button to display climate information on the screen.

Windshield defrosting and defogging

Automatic climate control system

To defog inside windshield

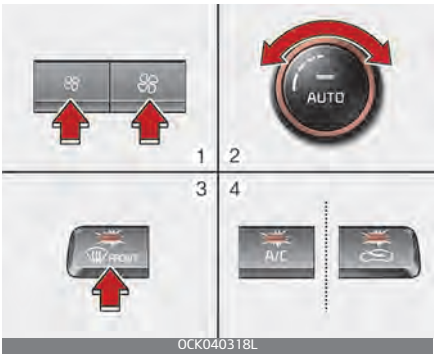

OCK040318L

1. Set the fan speed to the desired position.
2. Select desired temperature.
3. Press the defroster button ( ).
4. The air conditioning will turn on according to the detected ambient temperature and outside (fresh) air position will be selected automatically.

If the air conditioning and outside (fresh) air position are not selected automatically, adjust the corresponding button manually. If the position is selected, lower fan speed is adjusted to a higher fan speed.

To defrost outside windshield

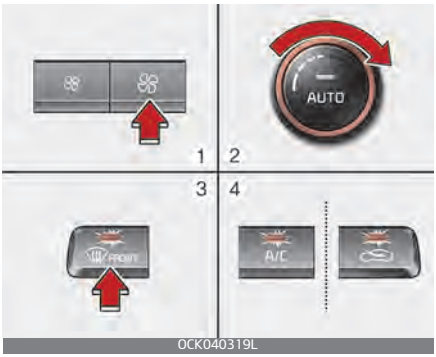

1. Set the fan speed to the highest position.
2. Set the temperature to the extreme hot (HI) position.
3. Press the defroster button ( ).
4. The air conditioning will turn on according to the detected ambient temperature and outside (fresh) air position will be selected automatically.

Operation tips

- For maximum defrosting, set the temperature control to the extreme right/hot position and the fan speed control to the highest speed.
- If warm air to the floor is desired while defrosting or defogging, set the mode to the floor-defrost position.
- Before driving, clear all snow and ice from the windshield, rear window, outside rear view mirrors, and all side windows.
- Clear all snow and ice from the hood and air inlet in the cowl grill to improve heater and defroster efficiency and to reduce the probability of fogging up the inside of the windshield.

WARNING

Windshield heating

Do not use the or position during cooling operation in extremely humid weather. The difference between the temperature of the outside air and the windshield could cause the outer surface of the windshield to fog up, causing loss of visibility. In this case, set the mode selection to the position and fan speed control to the lower speed.

Defogging logic

To reduce the probability of fogging up the inside of the windshield, the air intake or air conditioning are controlled automatically according to certain conditions such as or position. To cancel or return the defogging logic, do the following.

Automatic climate control system

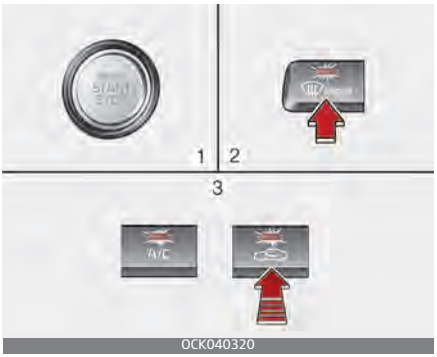

OCK040320

1. Turn the ENGINE START/STOP button to the ON position.
2. Press the defroster button ( ).
3. While pressing the air conditioning button (A/C), press the air intake control button at least 5 times within 3 seconds.

The indicator on the air intake button will blink 3 times. It indicates that the defogging logic is canceled or returned to the programmed status.

If the battery has been discharged or disconnected, it resets to the defog logic status.

Auto defogging system

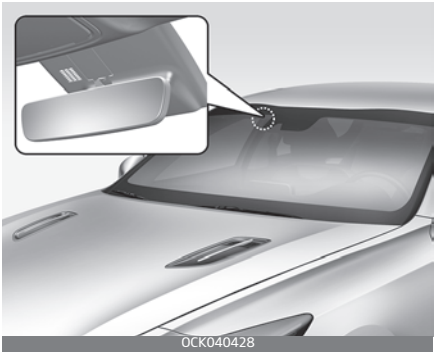
OCK040428

Auto defogging reduces the possibility of fogging up the inside of the windshield by automatically sensing the moisture of inside the windshield.

Activation on washer fluid is activated when you select 'Setup → Vehicle → Climate → Defog/Defrost Options → Auto Defog' from the Infotainment System screen.

For more details, please scan the QR code in a separately supplied Car Infotainment System Quick Reference Guide.

This indicator illuminates when the auto defogging system senses the moisture of inside the windshield and operates.

If more moisture is in the vehicle, higher steps operate as follow.

(For European region)

Step 1: Outside air position

Step 2: Blowing air flow toward the windshield

Step 3: Increasing air flow toward the windshield

Step 4: Operating the air conditioning.

(For except european region)

Step 1: Operating the air conditioning.

Step 2: Outside air position

Step 3: Blowing air flow toward the windshield

Step 4: Increasing air flow toward the windshield

(Step could be changed according to the out side temperature)

To cancel or reset the Auto Defogging System

Press the front windshield defroster button for 3 seconds when the ENGINE START/STOP button is in the ON position.

When the ADS system is canceled, Indicator on the button will blink 3 times per 0.5 sec and the position “ADS OFF” will be displayed on the climate control information screen.

When the ADS system is reset, Indicator on the button will blink 6 times per 0.25 sec and the position “ADS OFF” will be disappeared on the climate control information screen.

You can set or release the Auto Defogging System on the Climate Information selection screen.

If the battery is discharged or detached, the auto defogging system will be reset. Adjust the feature accordingly.

⚠ CAUTION

- Pressing one of Air intake recirculation, A/C OFF, Wind Direction Mode selection Buttons will deactivate the Auto Defogging System. To secure a driver’s vision, never push air recirculation, A/C OFF, Wind Direction Buttons while the Auto Defogging System is running.
- Do not forcibly remove the sensor cover on the top of windshield glass on the driver's side in the car. Removing the cover can damage the sensor.

Automatic ventilation

The system automatically selects the outside (fresh) air position when the climate control system operates over a certain period of time (approximately 30 minutes) in low temperature with the recirculated air position selected.

To cancel or reset the Automatic Ventilation

When the air conditioning system is on, select Face Level mode and while pressing the A/C button, press the recirculated air position button five times within three seconds.

When release the automatic ventilation function, the indicator will blink 3 times at 0.5 second intervals and air direction, air volume, Recirculation/Fresh mode, and air conditioner is automatically controlled.When it set the automatic ventilation function, the indicator will blink 6 times at 0.25 seconds intervals and air direction, air volume, Recirculation/Fresh mode, and air conditioner is automatically controlled.

Auto dehumidify is activated when you select 'Setup → Vehicle → Climate → Automatic Ventilation → Auto dehumidify' from the Infotainment System screen.

For more details, please scan the QR code in a separately supplied Car Infotainment System Quick Reference Guide.

If the battery is discharged or detached, the automatic ventilation will be reset. Adjust the feature accordingly.

Activate upon Washer Fluid Use

To prevent the odor from entering to inside the vehicle, the ventilation system changes to Recirculated Air Mode for a while when the windshield washer fluid sprayed.

However, at low outside temperature, to prevent from windshield fogging, the system continues to outside air mode.

System setting

1. ENGINE START/STOP button is ON.
2. Select Floor-Level ( ) air flow direction by pressing Mode Selection button.
3. With pressing Air Conditioning button, press the Recirculated Air button more than 4 times within 2 seconds.
4. If the system is set up, the indicator on Recirculated Air button will blinks 6 times.

System cancellation

1. ENGINE START/STOP button is ON.
2. Select Floor-Level ( ) air flow direction by pressing Mode Selection button.
3. With pressing Air Conditioning button, press the Recirculated Air button more than 4 times within 2 seconds.

4. If the system is cancelled, the indicator on Recirculated Air button will blinks 3 times.

Activation on washer fluid is activated when you select 'Setup → Vehicle → Climate → Recirculate Air → Activate upon Washer Fluid Use' from the Infotainment System screen.

For more details, please scan the QR code in a separately supplied Car Infotainment System Quick Reference Guide.

Recirculation Mode Plus (if equipped)

To prevent the inflow of polluted air indoors when passing through the tunnel and odor area, this function automatically switches the air conditioner to Recirculation Mode about 7 seconds before the vehicle enters the tunnel based on the map information of the navigation and the speed of the vehicle.

Operating Condition

- Type of Road: Expressway,
- Air Intake Condition: Fresh Mode

You may activate or deactivate this function from the Infotainment System screen as 'Setup → Vehicle → Climate → Recirculate Air → Recirculation Mode Plus'.

For more details, please scan the QR code in a separately supplied Car Infotainment System Quick Reference Guide.

Sunroof inside air recirculation (if equipped)

The outside (fresh) air position is automatically selected, when the sunroof is opened.

When you select the recirculated air position, the system maintains the recirculated air position for 3 minutes and then automatically converts to the outside (fresh) air position.

When the sunroof is closed, the air intake position will return to the original position that was selected.

Smart ventilation

The smart ventilation system maintains pleasant/fresh air condition inside the passenger compartment by automatically detecting/controlling the temperature and humidity when you drive the vehicle with the climate control system in the OFF position.

When the smart ventilation system starts to operate, the message, "SMART VENTILATION ON" appears for 5 seconds.

- The smart ventilation system stops operating, when the OFF

button of the climate control system is selected.
- The smart ventilation system stops operating, when any button of the climate control system is selected for operation.
- The smart ventilation system may not operate, when the vehicle is driven at low speed.

Smart Ventilation is activated when you select 'Setup → Vehicle → Climate → Automatic Ventilation → Smart Ventilation' from the Infotainment System screen.

For more details, please scan the QR code in a separately supplied Car Infotainment System Quick Reference Guide.

Remote start

When the engine is restarted with remote start, the climate system is automatically set to 73°F (23°C) and operates.

For detailed information refer to "Smart key functions" on page 4-7.

Storage compartments

These compartments can be used to store small items required by the driver or passengers.
- To avoid possible theft, do not leave valuables in the storage compartment.
- Always keep the storage compartment covers closed while driving. Do not attempt to place so many items in the storage compartment that the storage compartment cover can not close securely.

⚠ WARNING

Flammable materials

Do not store, propane cylinders or other flammable/explosive materials in the vehicle. These items may catch fire and/or explode if the vehicle is exposed to hot temperatures for extended periods.

Center console storage

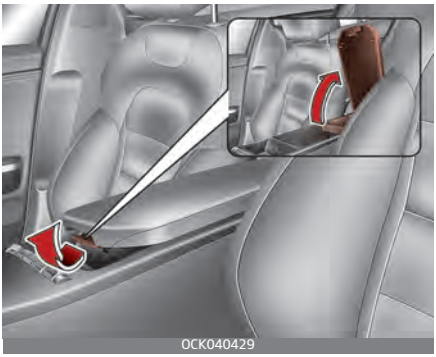

To open the center console storage, pull up the lever.

Glove box

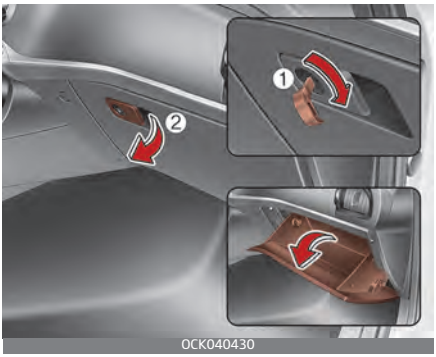

The glove box can be locked and unlocked with a master key (1). (if equipped)

To open the glove box, pull the lever (2) and the glove box will automatically open. Close the glove box after use.

WARNING

Glove Box

To reduce the risk of injury in an accident or sudden stop, always keep the glove box door closed while driving.

NOTICE

If the temperature control knob is in the warm or hot position, warm or hot air will flow into the glove box.

Interior features

Cup holder

WARNING

Hot liquids

Do not place uncovered cups with hot liquid in the cup holder while the vehicle is in motion. If the hot liquid spills, you may burn yourself. Such a burn to the driver could lead to loss of control of the vehicle.

CAUTION

Keep your drinks sealed while driving to prevent spilling your drink. If liquid spills, it may get into the vehicle's electrical/electronic system and damage electrical/electronic parts.

CAUTION

When cleaning spilled liquids, do not use heat to dry the cup holders. This may damage the cup holder.

Front seat

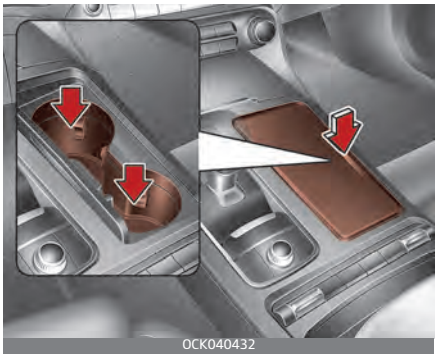

Rear seat

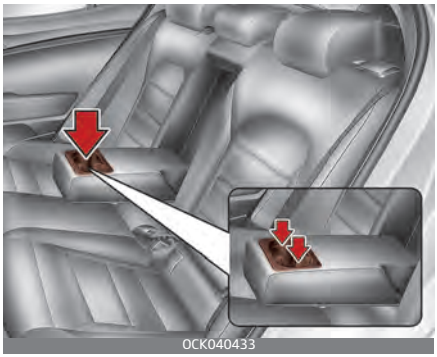

Cups or small beverage cans may be placed in the cup holders.

Seat warmer

Front seat – Type A

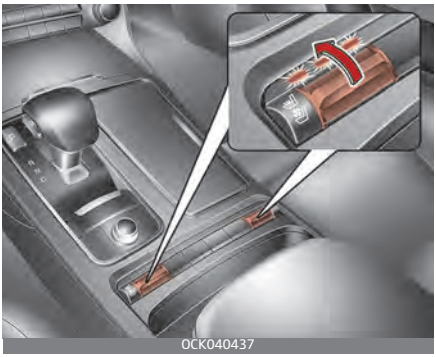

OCK040437

Front seat – Type B

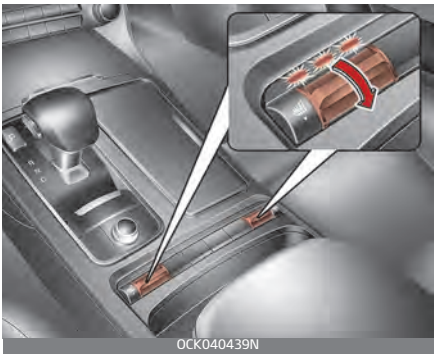

OCK040439N

Rear seat (if equipped)

OCK040438

The seat warmer is provided to warm the front seats during cold weather. With the ENGINE START/STOP button in the ON position, push up either of the switches to warm the driver's seat or the front passenger's seat.

During mild weather or under conditions where the operation of the seat warmer is not needed, keep the switches in the “OFF” position.

Temperature control (Manual)

- Each time you push up or press the switch, the temperature setting of the seat will change as follows :

Front seat

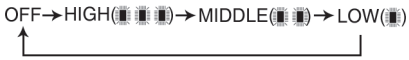

ODEEV068232NR

Rear seat

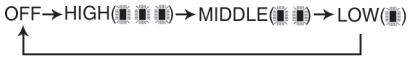

ODEEV068232NR

- The seat warmer defaults to the OFF position whenever the ENGINE START/STOP button is turned on.

Temperature control (Automatic)

The seat warmer starts to automatically control the seat temperature in order to prevent low-temperature burns after being manually turned ON.

Front seat

ODEEV068233NR

You may manually push up the button to increase the seat temperature. However, it soon returns to the automatic mode again.

- When pushing up the switch for more than 1.5 seconds with the seat warmer operating, the seat warmer will turn OFF.
- The seat warmer defaults to the OFF position whenever the ENGINE START/STOP button is in the ON position.

NOTICE

With the seat warmer switch in the ON position, the heating system in the seat turns off or on automatically depending on the seat temperature.

WARNING

Seat warmer burns

The seat warmer may cause burns, even at low temperatures, if used over a long period of time. Never allow passengers who may not be able to take care of themselves to be exposed to the risk of seat heater burns. These include:

1. Infants, children, elderly or disabled persons, or hospital outpatients
2. Persons with sensitive skin or those that burn easily
3. Fatigued individuals
4. Intoxicated individuals
5. Individuals taking medication that can cause drowsiness or sleepiness (sleeping pills, cold tablets, etc.)

Air ventilation seat (if equipped)

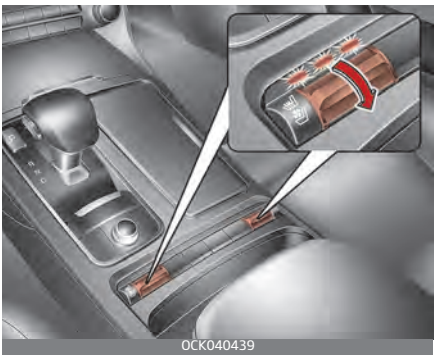
OCK040439

The temperature setting of the seat changes according to the switch position.

- If you want to ventilate your seat cushion, push down the switch (blue color).
- Each time you push down the button, the airflow will change as follows:

Front seat

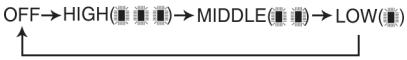

ODEEV068232NR

- The seat warmer (with air ventilation) defaults to the OFF position whenever the ENGINE START/STOP button is turned on.

⚠ CAUTION

Seat damage

- When cleaning the seats, do not use an organic solvent such as paint thinner, benzene, alcohol and gasoline. Doing so may damage the air ventilation seat.
- Do not place heavy or sharp objects on the seat. Those things may damage the air ventilation seat.
- Be careful not to spill liquid such as water or beverages on the seat. If you spill some liquid, wipe the seat with a dry towel. Before using the air ventilation seat, dry the seat completely.

Sun visor

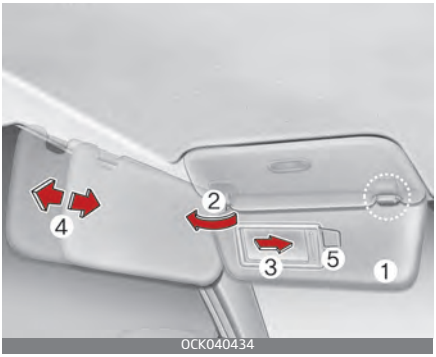

OCK040434

Use the sun visor to shield direct light through the front or side windows.

To use the sun visor, pull it downward.

To use the sun visor for the side window, pull it downward, unsnap it from the bracket (1) and swing it to the side (2).

To use the vanity mirror, pull down the visor and slide the mirror cover (3).

Adjust the sun visor extension forward or backward (4).

The ticket holder (5) is provided for holding a tollgate ticket.

* The actual sun visor lamp in the vehicle may differ from the illustration.

⚠ CAUTION

Vanity mirror lamp

If you use the vanity mirror lamp, turn off the lamp before returning the sun visor to its original position, otherwise it could result in battery discharge and possible sun visor damage.

Power outlet

Type A

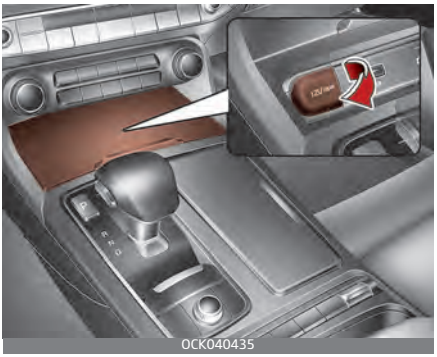

OCK040435

Type B

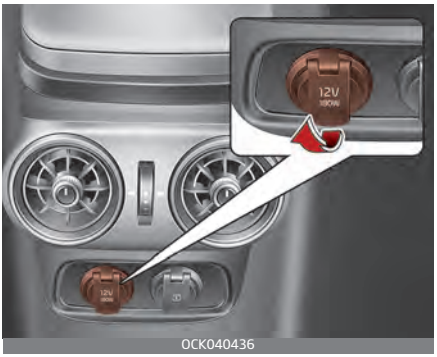

OCK040436

The power outlet is designed to provide power for mobile devices.

The devices should draw less than 10 amps with the engine running.

- Use the power outlet only when the engine is running and remove the accessory plug after use. Using the accessory plug for prolonged periods of time with the engine off could cause the battery to discharge.
- Only use 12V electric accessories which are less than 10A in electric capacity.
- Close the cover when not in use.
- Some electronic devices can cause electronic interference when plugged into a vehicle's power outlet. These devices may cause excessive audio static and malfunctions in other electronic systems or devices used in your vehicle.
- Push the plug in as far as it will go. If good contact is not made, the plug may overheat and the fuse may open.
- Plug in battery equipped electronic devices with reverse current protection. The current from the battery may flow into the vehicle's electrical/electronic system and cause system malfunction.

⚠ WARNING

Electric shock

Do not put a finger or a foreign object (pen, etc.) into a power outlet

and do not touch with a wet hand. You may receive an electric shock.

USB charger

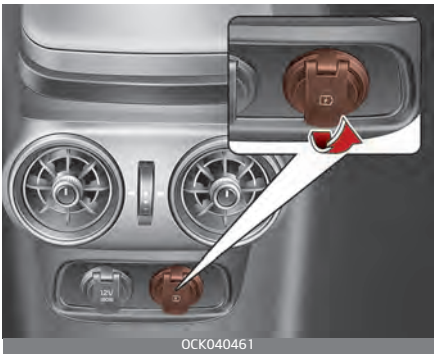

OCK040461

The USB charger is designed to recharge devices using a USB cable.

The electrical devices can be recharged when the ENGINE START/STOP button is in ACC/ON/START position.

The battery charging state may be monitored on the electrical device.

Disconnect the USB cable from the USB port after use.

- Use the USB charger when the engine is running to prevent battery discharge.
- Only devices that fits the USB port can be used.
- The USB charger can be used only for battery charging purposes.

Wireless smart phone charging system

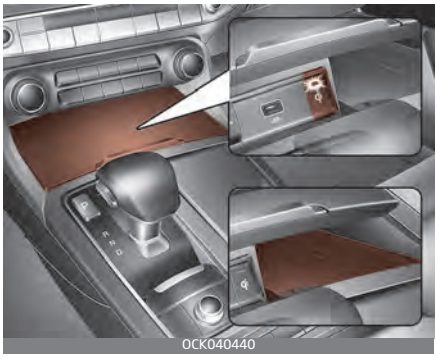
OCK040440

A wireless smart phone charging system is located in front of the center console.

Firmly close all doors, and press the ENGINE START/STOP button to the IGN ON position. To start wireless charging, place the smart phone equipped with wireless charging function on the wireless charging pad.

For best wireless charging results, place the smart phone on the center of the charging pad.

The wireless charging system is designed for one smart phone equipped with QI. Please refer to the smart phone accessory cover or the smart phone manufacturer homepage to check whether your smart phone supports QI function.

⚠ WARNING

If any metallic object such as coins is located between the wireless charging system and the smart phone, the charging may be disrupted. Also, the metallic object may heat up.

Wireless smart phone charging

1. Remove any object on the smart phone charging pad including the smart key. If there is any foreign object on the pad other than a smart phone, the wireless charging function may not operate properly.
2. Place the smart phone on the center of the wireless charging pad.
3. The indicator light will change to orange once the wireless charging begins. After the charging is complete, the orange light will change to green.
4. Wireless Charging System is activated or deactivated when you select "User Settings (LCD display) or Setup → Vehicle (Infotainment System screen) → Convenience → Wireless Charging System' from the Settings menu in the cluster LCD display or the Infotainment System screen.
   For more details, refer to "LCD display modes" on page 4-75.

If your vehicle is equipped with additional Infotainment System, please scan the QR code in a separately supplied Car Infotainment System Quick Reference Guide.

If the wireless charging does not work, gently move your smart phone around the pad until the charging indicator light turns yellow. Depending on the smart phone, the charging indicator light may not turn green even after the charging is complete.

If the wireless charging is not functioning properly, the orange light will blink and flash for ten seconds then turn off. In such cases, remove the smart phone from the pad and replace it on the pad again, or double check the charging status.

If you leave the smart phone on the charging pad when the ENGINE START/STOP button is in OFF, the vehicle will alert you through warning messages and sound (applicable for vehicles with voice guidance function) after the 'Good bye' function on the instrument cluster ends.

⚠ WARNING

Distracted driving

Driving while distracted can result in a loss of vehicle control that may lead to an accident, severe personal injury, and death. The driver's pri-

mary responsibility is in the safe and legal operation of a vehicle, and use of any handheld devices, other equipment, or vehicle systems which take the driver's eyes, attention and focus away from the safe operation of a vehicle or which are not permissible by law should never be used during operation of the vehicle.

⚠ CAUTION

Liquid in Wireless Smart Phone Charger

To prevent liquid from damaging the wireless smart phone charging system in your vehicle, securely close the tray cover when charging your phone.

⚠ WARNING

Metal in Wireless Charging System

If any metallic object such as coins placed between the wireless charging system and the smart phone, the charging may be disrupted. Also, the metallic object may heat up and potentially damage the charging system. If there is any metallic object between the smart phone and the charging pad, immediately remove the smart phone. Remove the metallic object after it has cooled down.

✻ NOTICE

- If it is not possible to close the tray cover due to the size of your smart phone or because the tray cover has been broken, do not use the wireless smart phone charging function.
- Even if you're not charging your smart phone, keep the tray cover closed at all times when it is left in the tray. Driving with the tray cover opened will increase the chance of accidents and result in injury as you're highly likely to get distracted by the smart phone.
- When the interior temperature of the wireless charging system rises above a set temperature, the wireless charging will cease to function. After the interior temperature drops below the threshold, the wireless charging function will resume.
- The wireless charging may not function properly when there is a heavy accessory cover on the smart phone.
- The wireless charging will stop when the smart key is moved out of the vehicle with the ENGINE START/STOP button in ON.
- Charging may be temporarily interrupted when smart key detection is activated. (when turning on ENGINE START/STOP button, opening or closing the doors)

- The wireless charging will stop when the vehicle is turned OFF.
- The wireless charging will stop when the smart phone is not in complete contact with the wireless charging pad.
- Items equipped with magnetic components such as credit cards, telephone cards, bank-books, or a transportation ticket may become damaged during wireless charging.
- Place the smart phone on the center of the charge pad for best results. The smart phone may not charge when placed near the rim of the charging pad. When the smart phone does get charged, it may heat up excessively.
- For smart phones without built-in wireless charging system, an appropriate accessory has to be equipped in order to use the vehicle's wireless charging system.
- Cellphones that are not certified for wireless smart phone charging standards (QI) may not be able to charge.
- Self-protection features in some smart phones could slow down or stop charging.
- In some cases, the wireless charging indicator could not turn green even when the phone is fully charged.
- Smart phones of some manufacturers may display messages on weak current. This is due to the particular characteristic of the smart phone and does not imply a malfunction on wireless charging function.
- The indicator light of some manufacturers' smart phones may still be yellow after the smart phone is fully charged.
  This is due to the particular characteristic of the smart phone and not a malfunction of the wireless charging system.
- When any smart phone without a wireless charging function or a metallic object is placed on the charging pad, a small noise may sound. This small sound is due to the vehicle discerning compatibility of the object placed on the charging pad. It does not affect your vehicle or the smart phone in any way.

This device complies with Part 15 of the FCC rules.

Operation is subject to the following two conditions:

1. This device may not cause harmful interference, and
2. This device must accept any interference received, including interference that may cause undesired operation

Coat hook

Type A

Type B

* This actual feature may differ from the illustration.

To use the coat hook, pull down the upper portion of hanger.

CAUTION

Hanging clothing

Do not hang heavy clothes, since they may damage the hook.

WARNING

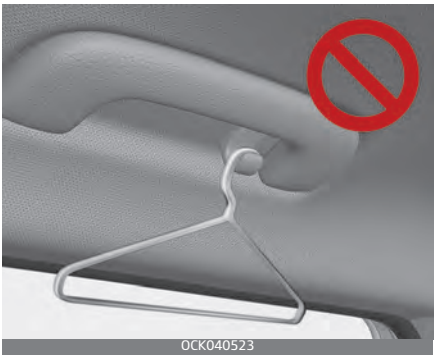

Do not hang other objects such as hangers or hard objects except clothes. Also, do not put heavy, sharp or breakable objects in the pockets of the clothing. In an accident or when the curtain air bag is inflated, it may cause vehicle damage or personal injury.

Floor mat anchor (s) (if equipped)

Type A/Type B

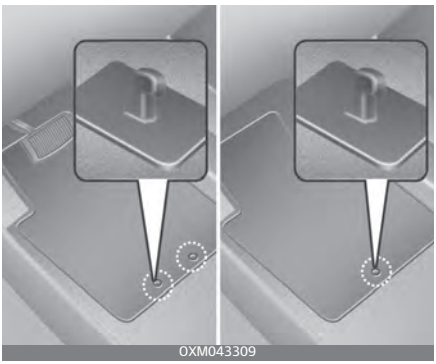

When using a floor mat on the front floor carpet, make sure it attaches

to the floor mat anchor(s) in your vehicle. This keeps the floor mat from sliding forward.

WARNING

After market floor mat

Do not install aftermarket floor mats that are not capable of being securely attached to the vehicle's floor mat anchors.

Unsecured floor mats can interfere with pedal operation.

The following must be observed when installing ANY floor mat to the vehicle.

1. Ensure that the floor mats are securely attached to the vehicle's floor mat anchor(s) before driving the vehicle.
2. Do not use ANY floor mat that cannot be firmly attached to the vehicle's floor mat anchors.
3. Do not stack floor mats on top of one another (e.g. all-weather rubber mat on top of a carpeted floor mat). Only a single floor mat should be installed in each position.

Luggage net (holder)

OCK040443N

To keep items from shifting in the cargo area, you can use the holders located in the cargo area to attach the luggage net. (if equipped)

CAUTION

To prevent damage to the goods or the vehicle, care should be taken when carrying fragile or bulky objects in the luggage compartment.

WARNING

To avoid eye injury, DO NOT overstretch the luggage net. ALWAYS keep your face and body out of the luggage net's recoil path. DO NOT use the luggage net when the strap has visible signs of wear or damage.

Infotainment system

NOTICE

If you install an after market HID head lamp, your vehicle's audio and electronic device may malfunction.

* If your vehicle is equipped with Infotainment system, refer to a separately supplied manual for detailed information.

Antenna

Shark fin antenna

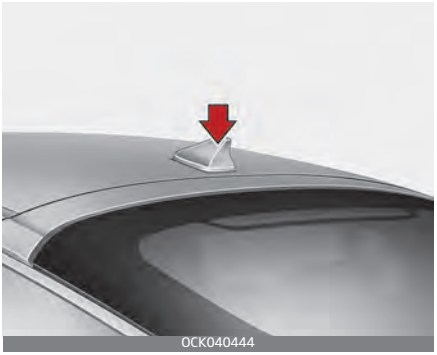

The shark fin antenna will receive both AM and FM signals and the transmit data.

USB port

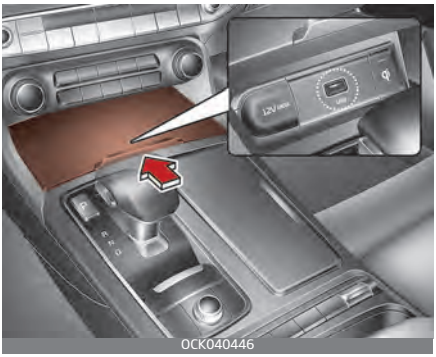

You can use an USB port to plug in an USB.

WARNING

Distracted driving

Driving while distracted can result in a loss of vehicle control that may lead to an accident, severe personal injury, and death. The driver's primary responsibility is in the safe and legal operation of a vehicle, and use of any handheld devices, other equipment, or vehicle systems which take the driver's eyes, attention and focus away from the safe operation of a vehicle or which are not permissible by law should never be used during operation of the vehicle.

Declaration of Conformity

FCC

This equipment has been tested and found to comply with the limits for a Class B digital device, pursuant to part 15 of the FCC Rules. These limits are designed to provide reasonable protection against harmful interference in a residential installation.

This equipment generates, uses and can radiate radio frequency energy and, if not installed and used in accordance with the instructions, may cause harmful interference to radio communications. However, there is no guarantee that interference will not occur in a particular installation. If this equipment does cause harmful interference to radio or television reception, which can be determined by turning the equipment off and on, the user is encouraged to try to correct the interference by one or more of the following measures :

- Reorient or relocate the receiving antenna.
- Increase the separation between the equipment and receiver.
- Connect the equipment into an outlet on a circuit different from that to which the receiver is connected.
- Consult the dealer or an experienced radio/TV technician for help.

Caution: Any changes or modifications to this device not explicitly approved by manufacturer could void your authority to operate this equipment.

This device complies with part 15 of the FCC Rules. Operation is subject to the following two conditions :

(1) This device may not cause harmful interference, and (2) this device must accept any interference received, including interference that may cause undesired operation.

This equipment complies with FCC radiation exposure limits set forth for an uncontrolled environment.

This equipment should be installed and operated with minimum 8 in (20 cm) between the and your body.This transmitter must not be collocated or operating in conjunction with any other antenna or transmitter unless authorized to do so by the FCC.

Driving your vehicle 5

Before driving 5-7
• Before entering vehicle 5-7
• Necessary inspections 5-7
• Before starting 5-7
ENGINE START/STOP button 5-8
• Illuminated ENGINE START/STOP button 5-8
• ENGINE START/STOP button position 5-8
• Starting the engine with a smart key 5-10
ISG (Idle Stop and Go) system 5-11
• Auto stop 5-12
• Auto start 5-13
• Condition of ISG system operation 5-13
• ISG system deactivation 5-14
• ISG system malfunction 5-14
Automatic transmission 5-15
• Automatic transmission operation 5-15
• Good driving practices 5-20
• Launch Control 5-20
Automatic transmission (shift-by-wire) 5-22
• Automatic transmission operation 5-22
• Parking 5-28
• LCD display messages 5-28
• Good driving practices 5-31
• Launch Control 5-32
The Eco-coasting system 5-34
• The Eco-Coasting system setting 5-34
• Eco-Coasting operation conditions 5-35
• The Eco-Coasting system release conditions 5-35
All wheel drive (AWD) 5-36

5 Driving your vehicle

• Using All Wheel Drive (AWD) 5-36
• Emergency precautions 5-38
Limited Slip Differential (LSD) 5-40
Brake system 5-41
• Power brakes 5-41
• Electronic Parking Brake 5-43
• Auto Hold 5-48
• Warning messages 5-50
• Anti-lock Brake System (ABS) 5-51
• Electronic Stability Control (ESC) 5-53
• Vehicle Stability Management (VSM) 5-57
• Hill-start Assist Control (HAC) 5-58
• Good braking practices 5-59
• Electronic Control Suspension (ECS) 5-60
• Brake Assist System (BAS) 5-60
• Low Vacuum Assist (LVA) 5-61
Drive mode integrated control system 5-62
• SPORT mode 5-63
• CUSTOM mode 5-64
• ECO mode 5-64
Forward Collision-Avoidance Assist (FCA) (Sensor fusion) .. 5-65
• Basic function 5-65
• Junction Turning function 5-66
• Detecting sensor 5-66
• Function settings 5-67
• Function operation 5-69
• Function malfunction and limitations 5-74
• This device complies with Part 15 of the FCC rules. 5-81

• Radio frequency radiation exposure information:.....5-82
Lane Keeping Assist (LKA) 5-82
• Detecting sensor 5-82
• Function settings.....5-83
• Function operation.....5-85
• Function malfunction and limitations.....5-87
Blind-Spot Collision-Avoidance Assist (BCA).....5-89
• Detecting sensor 5-91
• Function settings.....5-92
• Function operation.....5-94
• Function malfunction and limitations.....5-97
• This device complies with Part 15 of the FCC rules. 5-101
Driver Attention Warning (DAW).....5-102
• Function settings.....5-103
• Function operation.....5-104
• Function malfunction and limitations.....5-107
Blind-Spot View Monitor (BVM).....5-109
• Function settings.....5-110
• Function operation.....5-110
• Function malfunction and limitations.....5-111
Smart Cruise Control (SCC) 5-112
• Overtaking Acceleration Assist 5-112
• Detecting sensor 5-112
• Function settings.....5-112
• To adjust the sensitivity of smart cruise control 5-116
• Warning Volume 5-116
• Function operating.....5-117
• Function malfunction and limitations 5-123
• Limitations of the function.....5-123

5 Driving your vehicle

• This device complies with Part 15 of the FCC rules. ... 5-128
• Radio frequency radiation exposure information: 5-128
Navigation-based Smart Cruise Control (NSCC) 5-129
• Function settings 5-129
• Function operation 5-130
Lane Following Assist (LFA) 5-136
• Detecting sensor 5-136
• Function settings 5-136
• Function operation 5-137
• Function malfunction and limitations 5-139
Highway Driving Assist (HDA) 5-140
• Function settings 5-141
• Function operation 5-142
• Function operating 5-143
• Function malfunction and limitations 5-144
Rear Cross-Traffic Collision-Avoidance Assist (RCCA) .. 5-147
• Function settings 5-148
• Function operation 5-149
• Function malfunction and limitations 5-153
• This device complies with Part 15 of the FCC rules. ... 5-158
Declaration of conformity 5-158
• The radio frequency components (Front Radar) complies: ... 5-158
• The radio frequency components (Rear Corner Radar) complies: 5-159
Economical operation 5-160
Special driving conditions 5-162
• Hazardous driving conditions 5-162
• Rocking the vehicle 5-163

• Smooth cornering.....5-163
• Driving at night.....5-164
• Driving in the rain.....5-164
• Driving in flooded areas.....5-165
• Driving off-road.....5-165
• Highway driving.....5-165
Winter driving.....5-166
• Snowy or icy conditions.....5-166
• Use high quality ethylene glycol coolant.....5-169
• Check battery and cables.....5-169
• Change to "winter weight" oil if necessary.....5-169
• Check spark plugs and ignition system.....5-169
• To keep locks from freezing.....5-169
• Use approved window washer anti-freeze in system.5-170
• Don't let your parking brake freeze.....5-170
• Don't let ice and snow accumulate underneath.....5-170
• Carry emergency equipment.....5-170
TRAILER TOWING.....5-171
Vehicle load limit.....5-171
• Tire and loading information label.....5-171
• Certification label.....5-174
Vehicle weight.....5-176

Driving your vehicle

Be sure the exhaust system does not leak.

The exhaust system should be checked whenever the vehicle is raised to change the oil or for any other purpose. If you hear a change in the sound of the exhaust or if you drive over something that strikes the underneath side of the vehicle, have the exhaust system checked as soon as possible by an authorized Kia dealer.

⚠ WARNING

Engine exhaust

Do not inhale exhaust fumes or leave your engine running in a enclosed area for a prolonged time. Exhaust fumes contain carbon monoxide, a colorless, odorless gas that can cause unconsciousness and death by asphyxiation.

⚠ WARNING

Open liftgate

Do not drive with the liftgate open. Poisonous exhaust gases can enter the passenger compartment. If you must drive with the liftgate open proceed as follows:

1. Close all windows.
2. Open side vents.
3. Set the air intake control at “Fresh”, the air flow control at “Floor” or “Face” and the fan at the highest speed.

Before driving

Before entering vehicle

- Be sure that all windows, outside mirror(s), and outside lights are clean.
- Check the condition of the tires.
- Check under the vehicle for any sign of leaks.
- Be sure there are no obstacles behind you if you intend to back up.

Necessary inspections

Fluid levels, such as engine oil, engine coolant, brake fluid, and washer fluid should be checked on a regular basis, at the exact interval depending on the fluid. Further details are provided in section 7, “Maintenance”.

⚠ WARNING

Distracted driving

Focus on the road while driving. The driver's primary responsibility is in the safe and legal operation of the vehicle. Use of any handled devices, other equipment or vehicle systems that distract the driver should not be used during vehicle operation.

Before starting

- Close and lock all doors.
- Position the seat so that all controls are easily reached.
- Buckle your seat belt.
- Adjust the inside and outside rearview mirrors.
- Be sure that all lights work.
- Check all gauges.
- Check the operation of warning lights when the ENGINE START/STOP button is turned to the ON position.
- Release the parking brake and make sure the brake warning light goes out.

For safe operation, be sure you are familiar with your vehicle and its equipment.

⚠ WARNING

Fire risk

When you intend to park or stop the vehicle with the engine on, be careful not to depress the accelerator pedal for a long period of time. It may overheat the engine or exhaust system and cause fire.

⚠ WARNING

Check surroundings

Always check the surrounding areas near your vehicle for people, especially children, before putting a vehicle into D (Drive) or R (Reverse).

⚠ WARNING

Loose objects

Securely store items in your vehicle. When you make a sudden stop or turn the steering wheel rapidly, loose objects may drop on the floor and it could interfere with the operation of the foot pedals, possibly causing an accident.

⚠ WARNING

Proper footwear

Always wear appropriate shoes when operating your vehicle.

Unsuitable shoes (high heels, ski boots, sandals, etc.) may interfere with your ability to use the brake and accelerator pedals.

⚠ WARNING

Driving while intoxicated

Do not drive while intoxicated. Drinking and driving is dangerous. Even a small amount of alcohol will affect your reflexes, perceptions and judgment.

Driving while under the influence of drugs is as dangerous as or more dangerous than driving drunk.

ENGINE START/STOP button

Illuminated ENGINE START/STOP button

OCK050001

Whenever the front door is opened, the ENGINE START/STOP button will illuminate for your convenience. The light will go off after about 30 seconds when the door is closed.

When all doors are closed and you lock the vehicle by using the transmitter or the smart key, the light will go off immediately.

ENGINE START/STOP button position

OFF

To turn off the engine (START/RUN position) or vehicle power (ON position), press the ENGINE START/STOP button with the shift lever in the P (Park) position. When you press the ENGINE START/STOP button without the shift lever in the P (Park) position, the ENGINE

START/STOP button will not change to the OFF position but to the ACC position.

In an emergency situation while the vehicle is in motion, you are able to turn the engine off and to the ACC position by pressing the ENGINE START/STOP button for more than 2 seconds or 3 times successively within 3 seconds. If the vehicle is still moving, you can restart the engine without depressing the brake pedal by pressing the ENGINE START/STOP button with the shift lever in the N (Neutral) position.

ACC (Accessory)

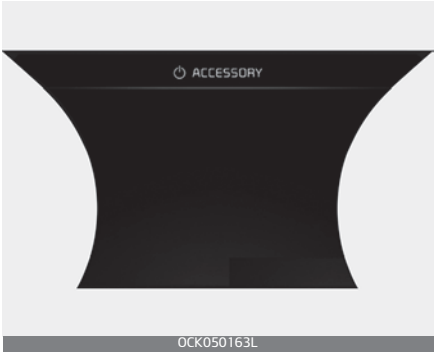

Press the ENGINE START/STOP button while it is in the OFF position without depressing the brake pedal.

If the ENGINE START/STOP button is in the ACC position for more than 1 hour, the button is turned off automatically to prevent battery discharge.

Accessory is displayed on the LCD of the cluster.

ON

Press the ENGINE START/STOP button while it is in the ACC position without depressing the brake pedal.

The warning lights can be checked before the engine is started. Do not leave the ENGINE START/STOP button in the ON position for an extended period of time. The battery may discharge, because the engine is not running.

START/RUN

To start the engine, depress the brake pedal and press the ENGINE START/STOP button with the shift lever in the P (Park) or the N (Neutral) position. For your safety, start the engine with the shift lever in the P (Park) position.

If you press the ENGINE START/STOP button without depressing the brake pedal, the engine will not start and the ENGINE START/STOP button changes as follow:

OFF → ACC → ON → OFF or ACC

✻ NOTICE

If you leave the ENGINE START/STOP button in the ACC or ON posi-

tion for an extended period of time, the battery will discharge.

⚠ WARNING

Starting vehicle

Never press the ENGINE START/STOP button while the vehicle is in motion except in an emergency. This would result in loss of directional control and braking function, which could cause an accident.

Starting the engine with a smart key

1. Carry the smart key or place it inside the vehicle.
2. Make sure the parking brake is firmly applied
3. Place the shift lever in P (Park). Depress the brake pedal fully. You can also start the engine when the shift lever is in the N (Neutral) position.
4. Press the ENGINE START/STOP button while depressing the brake pedal.
5. Do not wait for the engine to warm up while the vehicle remains stationary.
   Start driving at moderate engine speeds. (Steep accelerating and decelerating should be avoided.)

- Even if the smart key is in the vehicle, if it is far away from you, the engine may not start.
- When the ENGINE START/STOP button is in the ACC or ON position and any door is opened, the system checks for the presents of the smart key. If the smart key is not in the vehicle, a message “key is not in the vehicle” will appear on the LCD display. And if all doors are closed, the chime will sound for 5 seconds. The indicator or warning will turn off while the vehicle is moving. Always have the smart key with you.

⚠ WARNING

Unintended vehicle movement

Never leave the smart key in the vehicle with children or vehicle occupants who are unfamiliar with the vehicle operation. Pushing the ENGINE START/STOP button while the smart key is in the vehicle may result in unintended engine activation and/or unintended vehicle movement.

- If the smart key battery is weak or the smart key does not work correctly, you can start the engine by pressing the ENGINE START/STOP button with the smart key.
  The side with the lock button should contact the ENGINE START/STOP button directly. When you press the ENGINE START/STOP button directly with

the smart key, the smart key should contact the button at a right angle.

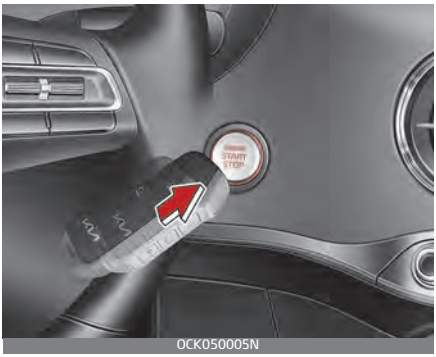

OCK050005N

- When the stop lamp fuse is blown, you can't start the engine normally. Replace the fuse with a new one. If it is not possible, you can start the engine by pressing the ENGINE START/STOP button for 10 seconds while it is in the ACC position. The engine can start without depressing the brake pedal. But for your safety always depress the brake pedal before starting the engine.

Do not press the ENGINE START/STOP button for more than 10 seconds except when the stop lamp fuse is blown.

ISG (Idle Stop and Go) system

Your vehicle may be equipped with the ISG system, which reduces fuel consumption by automatically shutting down the engine, when the vehicle is at a standstill. (For example: red light, stop sign and traffic jam)

The engine starts automatically as soon as the starting conditions are met.

The ISG system is ON whenever the engine is running.

NOTICE

When the engine automatically starts by the ISG system, some warning lights (ABS, ESC, ESC OFF, EPS or parking brake warning light) may turn on for a few seconds.

This happens because of low battery voltage. It does not mean the system has malfunctioned.

Auto stop

To stop the engine in idle stop mode

Type A

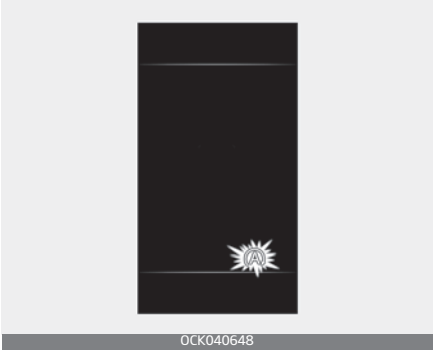

OCK040648

Type B

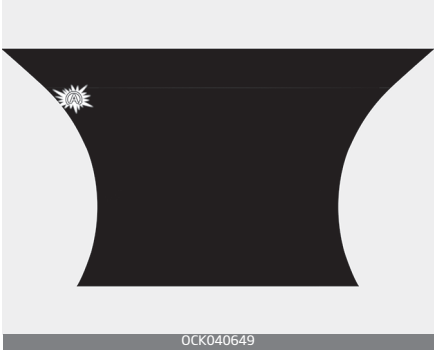

OCK040649

Stop the vehicle completely by pressing the brake pedal and the shift lever is in the D (Drive) or N (Neutral) position.

The engine will stop and the green AUTO STOP(Ⓐ) indicator on the instrument cluster will illuminate.

NOTICE

If you open the engine hood in auto stop mode, the following will happen:

- The ISG system will deactivate (the light on the ISG OFF button will illuminate). In this case, be sure to depress the brake pedal and start the engine using the ENGINE START/STOP button.
- A message will appear on the LCD display.
- If you move the transmission lever to R without depressing the brake pedal after stopping engine automatically, the engine does not restart automatically and warning chime alarms. When it happens, press brake pedal for auto start.

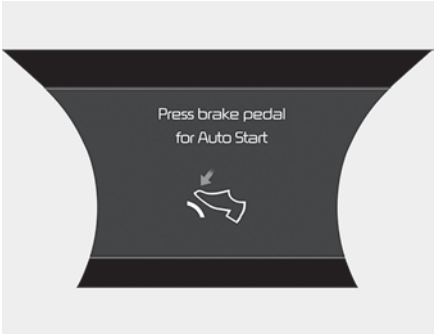

OCK050337L

Auto start

To restart the engine from idle stop mode

- Release the brake pedal.

or

- Move the shift gear to the R (Reverse) position or the manual mode while depressing the brake pedal.

The engine will start and the green AUTO STOP indicator (Ⓐ) on the instrument cluster will change to white.

The engine will also restart automatically without the driver's any actions if the following occurs:

- The brake vacuum pressure is low
- The engine has stopped for about 5 minutes
- The air conditioning is ON with the fan speed set to the 5th speed
- The front defroster is ON
- The battery is weak
- The cooling and heating performance of the climate control system is unsatisfactory
- The vehicle is shifted to P (Park) when Auto Hold is activated
- The door is opened or the seatbelt is unfastened when Auto Hold is activated
- The EPB switch is pressed when Auto Hold is activated

Condition of ISG system operation

The ISG system will operate under the following condition:

- The driver's seatbelt is fastened
- The driver's door and hood are closed
- The brake vacuum pressure is adequate
- The battery sensor is activated and the battery is sufficiently charged
- Outside temperature is not too low or too high
- The vehicle is driven over a constant speed and stops
- The climate control system satisfies the conditions
- The vehicle is sufficiently warmed up
- The incline is gradual
- The steering wheel is turned less than 180 degrees and then the vehicle stops

NOTICE

- If the ISG system does not meet the operation condition, the ISG system is deactivated. The light on the ISG OFF button will illuminate and a message "Auto Stop conditions not met" will appear on the LCD display.
- If the light or notice comes on continuously, please check the operation condition.

ISG system deactivation

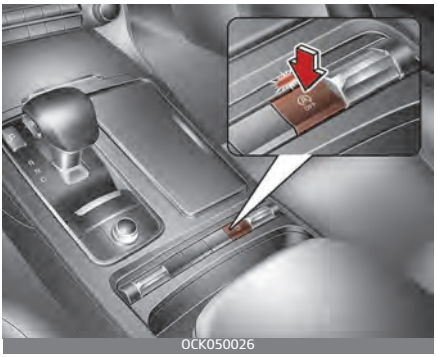

- If you wish to deactivate the ISG system, press the ISG OFF button. The light on the ISG OFF button will illuminate.
- If you press the ISG OFF button again, the system will be activated and the light on the ISG OFF button will turn off.

ISG system malfunction

The system may not operate when:

The ISG related sensors or system error occurs.

The following will happen:

- The yellow AUTO STOP (Ⓐ) indicator on the instrument cluster will stay on after blinking for 5 seconds.
- The light on the ISG OFF button will illuminate.

NOTICE

If the ISG OFF button light is not turned off by pressing the ISG OFF button again or if the ISG system continuously does not work correctly, have your vehicle inspected by an authorized Kia dealer.

WARNING

When the engine is in Idle Stop mode, it's possible to restart the engine without the driver taking any action.

Before leaving the car or doing anything in the engine room area, stop the engine by turning the ENGINE START/STOP button to the OFF position.

NOTICE

If the AGM battery is reconnected or replaced, ISG function will not operate immediately.

If you want to use the ISG function, the battery sensor needs to be calibrated for approximately 4 hours with the ignition off and then, turn the engine on and off 2 or 3 times.

Automatic transmission (if equipped)

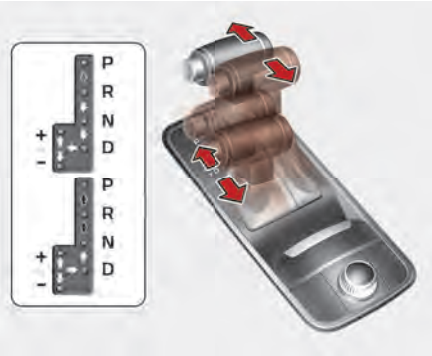

OCK050164L

➡ Depress the brake pedal and the lock release button when shifting.

➡ Press the lock release button when shifting.

⇨ The shift lever can be shifted freely.

Automatic transmission operation

The automatic transmission has 8 forward speeds and one reverse speed. The individual speeds are selected automatically, depending on the position of the shift lever.

✻ NOTICE

The first few shifts on a new vehicle, if the battery has been disconnected, may be somewhat abrupt. This is a normal condition, and the shifting sequence will adjust after shifts are cycled a few times by the TCM (Transmission Control Module) or PCM (Powertrain Control Module).

For smooth operation, depress the brake pedal and the lock release button when shifting from N (Neutral) to a forward or reverse gear.

⚠ WARNING

Leaving Vehicle

Before leaving the driver's seat, always make sure the shift lever is in the P (Park) position; then set the parking brake fully and shut the engine off. Do not use the P position in place of the parking brake. Always make sure the shift lever is locked in the P position and set the parking brake fully. Unexpected and sudden vehicle movement can occur if these precautions are not followed.

⚠ CAUTION

Transmission

To avoid damage to your transmission, do not accelerate the engine in R (Reverse) or any forward gear position with the brakes on. The transmission may be damaged if you shift into P (Park) while the vehicle is in motion.

When stopped on an incline, do not hold the vehicle with the engine power. Use the service brake or the parking brake.

Transmission ranges

The indicator in the instrument cluster displays the shift lever position when the ENGINE START/STOP button is in the ON position.

P (Park)

Always come to a complete stop before shifting into P (Park). This position locks the transmission and prevents the drive wheels from rotating.

Shifting into P (Park) while the vehicle is in motion will cause the drive wheels to lock and will cause you to lose control of the vehicle.

R (Reverse)

Use this position to drive the vehicle backward.

⚠ CAUTION

Shifting

Always come to a complete stop before shifting into or out of R (Reverse); you may damage the transmission if you shift into R (Reverse) while the vehicle is in motion, except as explained refer to "Rocking the vehicle" on page 5-163.

N (Neutral)

The wheels and transmission are not engaged. The vehicle will roll freely even on the slightest incline unless the parking brake or service brakes are applied.

⚠ WARNING

Parking In Neutral

- With the exception of parking in neutral gear, always park the vehicle in [P] (Park) for safety and apply the parking brake.
- Before parking in [N] (Neutral) gear, make sure the parking ground is level and flat. Do not park in [N] gear on any slopes or gradients. If parked and left in [N], the vehicle may move and cause serious damage or injury.

✻ NOTICE

- After the ENGINE START/STOP button has been turned off, the EPB (Electronic Parking Brake) cannot be released.
- For EPB (Electronic Parking Brake) equipped vehicles with [AUTO HOLD] function used while driving, if the ENGINE START/STOP button has been turned [OFF], the EPB (Electronic Parking Brake) will be engaged automatically. Therefore, [AUTO HOLD] function should be turned off before the ENGINE START/STOP button is turned off.

⚠ CAUTION

Starter

If the engine stalls while the vehicle is in motion, do not attempt to move the shift lever to the P (Park) position. If the traffic and road conditions permit, you may put the shift lever in the N (Neutral) position while the vehicle is still moving and press the ENGINE START/STOP button in an attempt to restart the engine.

D (Drive)

This is the normal forward driving position. The transmission will automatically shift through an 8-gear sequence, providing the best fuel economy and power.

For extra power when passing another vehicle or climbing grades, depress the accelerator fully, at which time the transmission will automatically downshift to the next lower gear.

Manual mode

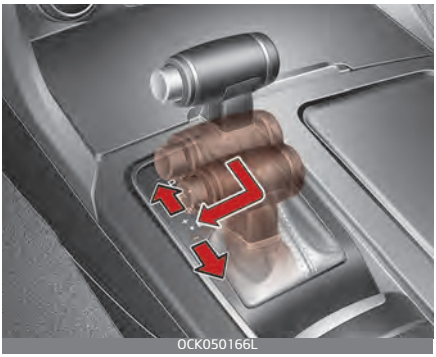

Whether the vehicle is stationary or in motion, manual mode is selected by pushing the shift lever from the D (Drive) position into the manual gate. To return to D (Drive) range operation, push the shift lever back into the main gate.

In manual mode, moving the shift lever backwards and forwards will allow you to make gearshifts rapidly. In contrast to a manual transmission, the manual mode allows gearshifts with the accelerator pedal depressed.

Up (+) : Push the lever forward once to shift up one gear.

Down (–) : Pull the lever backwards once to shift down one gear.

- In manual mode, the driver must execute upshifts in accordance with road conditions, taking care to keep the engine speed below the red zone.

- In manual mode, only the 8 forward gears can be selected. To reverse or park the vehicle, move the shift lever to the R (Reverse) or P (Park) position as required.
- In manual mode, downshifts are made automatically when the vehicle slows down. When the vehicle stops, 1st gear is automatically selected.
- In manual mode, when the engine rpm approaches the red zone, shift points are varied to upshift automatically.
- To maintain the required levels of vehicle performance and safety, the system may not execute certain gearshifts when the shift lever is operated.
- When driving on a slippery road, push the shift lever forward into the + (up) position. This causes the transmission to shift into the higher gears which is better for smooth driving on a slippery road. Push the shift lever to the – (down) side to shift back to the 1st gear.

Paddle shifter

The paddle shifter is available when the shift lever is in the D (Drive) position.

Pull the [+] or [–] paddle shifter once to shift up or down one gear and the system changes from automatic mode to manual mode.

The system changes from manual mode to automatic mode in one of the following situations.

1. The [+] paddle has been pulled and held for more than 1 second.
2. The accelerator pedal has been depressed gently for more than 6 seconds.
3. The vehicle speed is lower than 4 mph (7 km/h).
4. The shift lever has been moved to manual mode and then returned to D (Drive) position.

However, manual mode is not changed to automatic mode in (2) when SPORT mode or SPORT of powertrain in CUSTOM mode is

selected in the drive mode integrated control system.

✻ NOTICE

If the [+] and [-] paddle shifters are pulled at the same time, gear shift may not occur.

Shift lock system

For your safety, the automatic transmission has a shift lock system which prevents shifting the transmission from P (Park) into R (Reverse) unless the brake pedal is depressed.

To shift the transmission from P (Park) into R (Reverse):

1. Depress and hold the brake pedal.
2. Start the engine or turn the ENGINE START/STOP button to the ON position.
3. Move the shift lever.

If the brake pedal is repeatedly depressed and released with the shift lever in the P (Park) position, a chattering noise & vibration near the shift lever may be heard. It is a normal condition.

⚠ WARNING

Shifting from park

Always fully depress the brake pedal before and while shifting out of the P (Park) position into another position to avoid inadvertent motion of the vehicle which could injure persons in or around the vehicle.

Shift-lock override

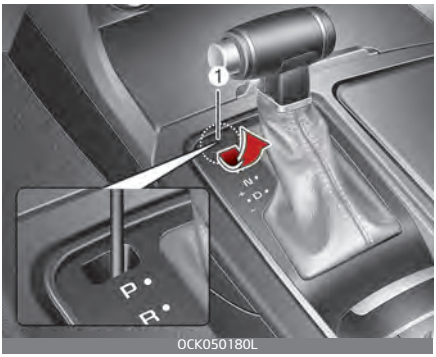

OCK050180L

If the shift lever cannot be moved from the P (Park) position into R (Reverse) position with the brake pedal depressed, continue depressing the brake, then do the following:

1. Place the ENGINE START/STOP button in the OFF position.
2. Apply the parking brake.
3. Carefully remove the cap (1) covering the shift-lock release access hole.
4. Insert a tool (e.g. flathead screwdriver) into the access hole and press down on the tool.
5. Move the shift lever.
6. Remove the tool from the shift-lock override access hole then install the cap.
7. We recommend that the system be inspected by an authorized Kia dealer.

ENGINE START/STOP button interlock system

The ENGINE START/STOP button will not change to the OFF position unless the shift lever is in the P (Park) position.

Good driving practices

- Never move the gear shift lever from P (Park) to any other position with the accelerator pedal depressed.
- Never move the gear shift lever into P (Park) when the vehicle is in motion.
- Slow down before shifting to a lower gear. Otherwise, the lower gear may not be engaged.
- Always use the parking brake. Do not depend on placing the transmission in P (Park) to keep the vehicle from moving.
- Optimum vehicle performance and economy is obtained by smoothly depressing and releasing the accelerator pedal.

WARNING

When driving uphill or downhill, always shift to D (Drive) for driving forward or shift to R (Reverse) for driving backwards, and check the gear position indicated on the cluster before driving.

NOTICE

Kickdown Mechanism

Use the kickdown mechanism for maximum acceleration. Depress the accelerator pedal beyond the pressure point. The automatic transmission will shift to a lower gear depending on the engine speed.

Moving up a steep grade from a standing start

To move up a steep grade from a standing start, depress the brake pedal, release the parking brake, and shift the shift lever to D (Drive). Depress the accelerator gradually while releasing the brake pedal.

Launch Control

Launch Control Operation

- When using Launch Control, a driver should always make sure that the engine's cooling water is warmed up and reaches a recommended temperature.
- To operate ESC Off state 2, Press and hold ESC button for more than 3 seconds in Sports mode. (Status Display on Cluster Screen)
- For launching, stop the vehicle and keep the steering wheel straight.
- EPB and Auto Hold must be released for smooth launching.

- Press the brake firmly with your left foot in transmission D mode, while pressing the accelerator pedal down fully with your right foot. Then, the Launch Control Ready (1) will be in place.

Launch Control Ready (1)

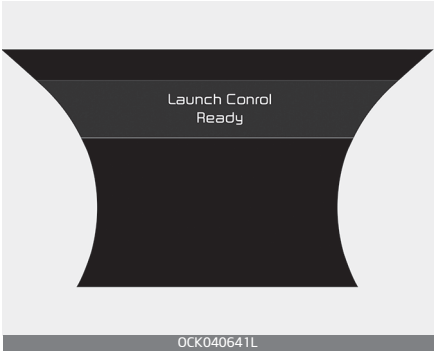

- To start a vehicle, with your right foot pressing the accelerator pedal down fully, remove your left foot from the brake. (within 4 seconds) (Launch Control Active (2) Status Display on Cluster Screen)

Launch Control Active (2)

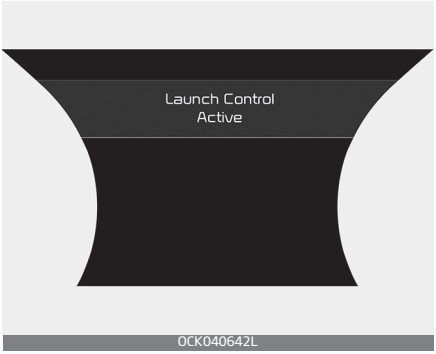

- If both the brakes and accelerater pedals were applied and the driver removes his foot only from the accelerater pedal, Launch Control will be automatically deactivated. Or, if the vehicle does not start after 4 seconds with a driver's feet on both brake and accelerate pedals, Launch Control will automatically deactivated as well.
- Do not operate both brake and accelerate pedals simultaneously for longer than 4 seconds.
- When re-using Launch Control, a driver should have the vehicle cool down sufficiently by driving.

Limited use of Launch Control (3)

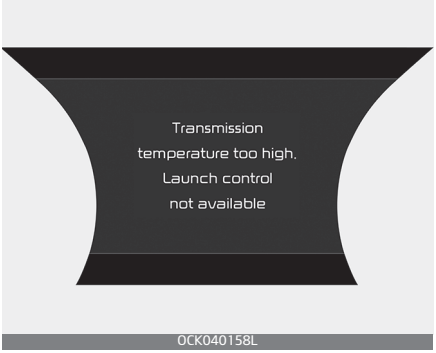

- A warning message will pop up on the screen if the transmission fluid temperature is above a certain level while using Launch Control. Also, Launch Control will be automatically deactivated.
- To address the issue as above, a driver should cool down the transmission fluid temperature by driving the vehicle. (Driving at a

constant speed over 37 mph (60 km/h) is highly recommended, but this should only be done if traffic and road conditions permit the driver to do so safely.)

⚠ WARNING

It is the responsibility of the driver to make sure it is safe before using Launch Control. Do not use Launch Control on public roads or when pedestrian congestion is present. Doing so could result in an accident that causes serious injuries.

✻ NOTICE

Launch performance can vary depending on fuel, environment, tire, and loading conditions.

⚠ CAUTION

Constant use of Launch Control can put enormous stress on transmission, engine, and drive shafts and can result in vehicle damage. It is highly recommended that Launch Control is used after completion of the vehicle brake-in process.

Automatic transmission (shift-by-wire) (if equipped)

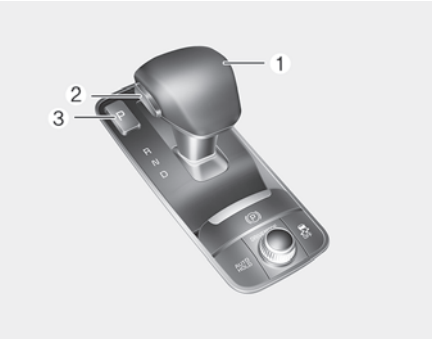

OCK057008L

When you move the shift lever (1), depress the brake pedal while pressing the UNLOCK button (2).

To shift the gear to P (Park), press the [P] button(3).

Automatic transmission operation

The automatic transmission has 8 forward speeds and one reverse speed.

The individual speeds are selected automatically in the D (Drive) position.

⚠ WARNING

To reduce the risk of serious injury or death:

- ALWAYS check the surrounding areas near your vehicle for people, especially children, before shifting a vehicle into D (Drive) or R (Reverse).

- Before leaving the driver's seat, always make sure the shift lever is in the P (Park) position, then set the parking brake, and place the ENGINE START/STOP button in the OFF position. Unexpected and sudden vehicle movement can occur if these precautions are not followed.
- Do not use engine braking (rapidly shifting from a high gear to lower gear) on slippery roads. The vehicle may slip causing an accident.

Transmission ranges

The indicator in the instrument cluster displays the shift lever position when the ENGINE START/STOP button is in the ON position.

However, if the gear is in N (Neutral) or P (Park), the position is displayed on the instrument cluster when the ENGINE START/STOP button is in the OFF or ACC position.

⚠ CAUTION

Transmission

To avoid damage to your transmission, do not accelerate the engine in R (Reverse) or any forward gear position with the brakes on. The transmission may be damaged if you shift into P (Park) while the vehicle is in motion.

P (Park)

Always come to a complete stop before shifting into P (Park).

To shift the gear from R (Reverse), N (Neutral), D (Drive) or Manual mode to P (Park), press the [P] button.

If you turn off the engine in D (Drive) or R (Reverse), the shifting automatically changes to P (Park).

When you park the vehicle, press the [P] button while depressing the brake pedal and then apply the parking brake.

To reduce rollaway risk, do not use the P (Park) position in place of the parking brake.

⚠ WARNING

- Shifting into P (Park) while the vehicle is in motion may cause you to lose control of the vehicle.
- Do not use the P (Park) position in place of the parking brake.

R (Reverse)

D (Drive) → R (Reverse)

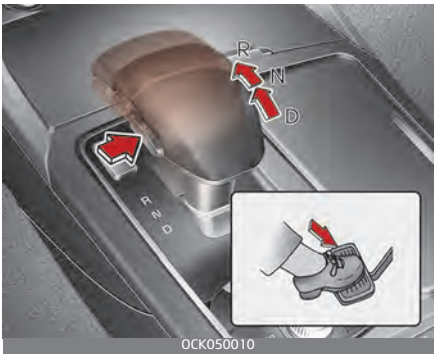

P (Park), N (Neutral) → R (Reverse)

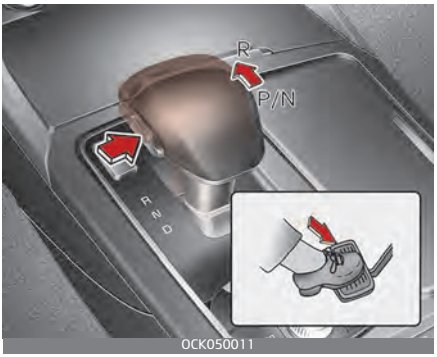

Use this position to drive the vehicle backward.

To move the shift lever to R (Reverse), press the [UNLOCK] button while depressing the brake pedal and then move the shift lever forward.

N (Neutral)

R (Reverse), D (Drive) → N (Neutral)

The wheels and transmission are not engaged.

Use N (Neutral) if you need to restart a stalled engine, or if it is necessary to stop with the engine ON. Shift into P (Park) if you need to leave your vehicle for any reason.

Always depress the brake pedal when you are shifting from N (Neutral) to another gear.

To turn off the engine, re-press the ENGINE START/STOP button to the ON position, press the [P] button, and press the ENGINE START/STOP button to the OFF position.

When either the driver's door or the front passenger's door is opened with the ENGINE START/STOP button in the ACC position and the shift lever in N (Neutral) position, the engine is automatically turned OFF and the transmission automati-

cally changes to the P (Park) position.

⚠ WARNING

- To avoid inadvertent vehicle movement, do not shift into gear unless your foot is firmly on the brake pedal.
- Do not permit your vehicle to idle in the N (Neutral) position for an extended period of time as this will preclude the wheels and the transmission from engaging. While parking the vehicle with the engine running, depress the brake pedal, shift the vehicle to the P (Park) position and apply the parking brake.
- Do not drive with the shift lever in N (Neutral). The engine brake will not work and may lead to an accident.

D (Drive)

R (Reverse) → D (Drive)

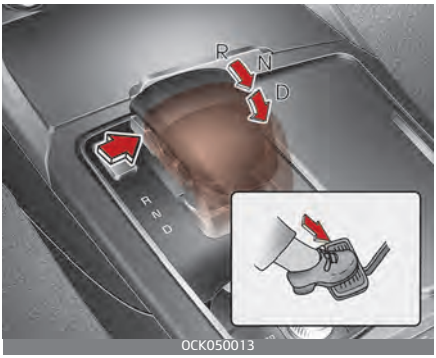

P (Park), N (Neutral) → D (Drive)

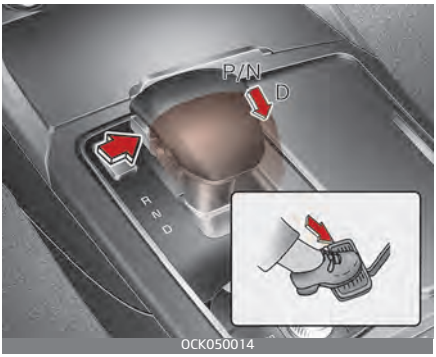

This is the normal driving position.The transmission will automatically shift through a 8-gear sequence, providing the best fuel economy and power.

For extra power when passing another vehicle or driving uphill, depress the accelerator pedal further until you feel the transmission downshift to a lower gear.

To shift into D (Drive), depress the brake pedal and press the [UNLOCK] button on the shift lever. Move the shift lever backward.

To shift into D (Drive) from N (Neutral), you must depress the brake pedal.

✻ NOTICE

Always come to complete stop before shifting into D (Drive).

NOTICE

When moving the shift lever to N (Neutral) position, a normal mechanical sound will occur.

CAUTION

For EPB (Electronic Parking Brake) equipped vehicles with [AUTO HOLD] function used while driving, if the ENGINE START/STOP button has been turned [OFF], the electronic parking brake will be engaged automatically. Therefore, [AUTO HOLD] function should be turned off before the ENGINE START/STOP button is turned off.

WARNING

- With the exception of parking in neutral gear, always park the vehicle in [P] (Park) for safety and apply the parking brake.
- Before parking in [N] (Neutral) gear, first make sure the parking ground is level and flat. Do not park in [N] gear on any slopes or gradients. If parked and left in [N], the vehicle may move and cause serious damage or injury.

NOTICE

After the ENGINE START/STOP button has been turned off, the electronic parking brake cannot be disengaged.

Paddle shifter (Manual mode)

The paddle shifter is available when the shift lever is in the D (Drive) position.

Pull the [+] or [-] paddle shifter once to shift up or down one gear and the system changes from automatic mode to manual mode.

The system changes from manual mode to automatic mode in one of the following situations.

1. The [+] paddle has been pulled and held for more than 1 second.
2. The accelerator pedal has been depressed gently for more than 6 seconds.
3. The vehicle speed is lower than 4 mph (7 km/h).
4. The shift lever has been pulled down and released.

However, manual mode is not changed to automatic mode in (2) when SPORT mode or SPORT of powertrain in CUSTOM mode is selected in the drive mode integrated control system.

✻ NOTICE

If the [+] and [-] paddle shifters are pulled at the same time, gear shift may not occur.

Shift-lock system

For your safety, the automatic transmission has a shift-lock system which prevents shifting the transmission from P (Park) into R (Reverse) or D (Drive) unless the [UNLOCK] button is pressed while depressing the brake pedal.

To shift the transmission from P (Park) into R (Reverse) or D (Drive):

1. Depress and hold the brake pedal.
2. Start the engine or place the ENGINE START/STOP button in the ON position.
3. Move the shift lever to R (Reverse) or D (Drive) while pressing the [UNLOCK] button.

When the battery is discharged:

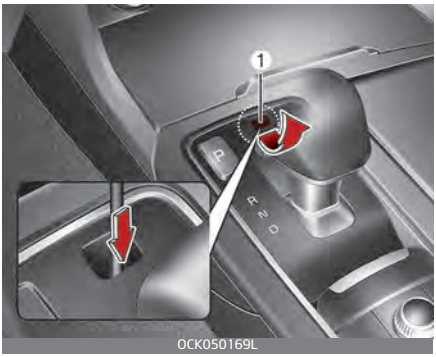

You can move the shift lever, when the battery is discharged. However, it will not change the gear from P (Parking) to N (Neutral) or others.

In emergencies, do the following to move the shift lever to N (Neutral) on a level ground.

1. Connect the cables between the jump-starting terminals inside the engine compartment and the battery terminals of another vehicle/supplementary battery. For more information refer to "Jump starting" on page 6-6.
2. Release the parking brake with the ENGINE START/STOP button in the ON position.
3. Press the ENGINE START/STOP button to the OFF position.

4. Remove the cap-cover (1) and insert a tool (e.g. flathead screwdriver) into the access hole and press down on the tool while depressing the brake pedal. Then, the gear will change to the N (Neutral) position. It should be pressed within 3 minutes after turning OFF the engine.

NOTICE

In situations where the gear needs to be changed from P (Park) to N (Neutral) when the ENGINE START/STOP button is in the OFF position, refer to step 4.

The actuators work to shift the gear into the N (Neutral) or P (Parking) and make a normal mechanical sound.

Parking

Always come to a complete stop and continue to depress the brake pedal. Move the shift lever into the P (Park) position, apply the parking brake, and place the ENGINE START/STOP button in the OFF position. Take the key with you when exiting the vehicle.

WARNING

- Do not depress the accelerator pedal while sitting in the vehicle with the engine running. Depressing the accelerator pedal for a long period of time may cause the engine or exhaust system to overheat and start a fire.
- The exhaust gas and the exhaust system are very hot. Keep away from the exhaust system components. Do not stop or park over flammable materials, such as dry grass, paper or leaves. They may ignite and cause a fire.

LCD display messages

Shifter system malfunction

The warning message appears on the LCD display, when the transmission or the shift lever does not properly operate in the P (Park) position. In this case, have the vehicle inspected by an authorized Kia dealer immediately.

Check shift lever

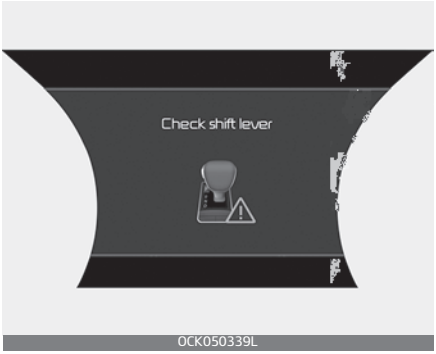

OCK050339L

The warning message appears on the LCD display, when there is a malfunction with one of the key transmission components.

In this case, have the vehicle inspected by an authorized Kia dealer immediately.

Shifting conditions not met

OCK050340L

The warning message appears on the LCD display, when engine RPM is too high, or when driving speed is too fast to shift the gear.

We recommend you decrease your RPM level or slow down before shifting the gear.

Press brake pedal to change gear

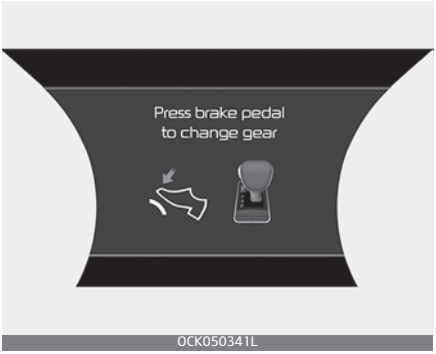

OCK050341L

The warning message appears on the LCD display, when the brake pedal is not depressed while shifting the gear.

We recommend you depress the brake pedal and then shift the gear.

Shift to P after stopping

OCK050342L

The warning message appears on the LCD display, when the brake

pedal is not depressed while shifting the gear.

We recommend you depress the brake pedal and then shift the gear.

Press UNLOCK to change gear

OCK050343L

The warning message appears on the LCD display, when the [UNLOCK] button is not pressed while shifting the gear.

We recommend you press the [UNLOCK] button and then shift the gear.

Vehicle Power limited due to high transmission temperature

OCK050318L

This message is displayed when the transmission oil temperature is high. Drive at steady speed or stop the vehicle at a safe place with the engine on. When the oil temperature returns to normal, the message will disappear.

PARK engaged

OCK050344L

The message appears on the LCD display, when the P (Park) position is engaged.

NEUTRAL engaged

The message appears on the LCD display, when the N (Neutral) position is engaged.

Good driving practices

- Never move the shift lever from P (Park) or N (Neutral) to any other position with the accelerator pedal depressed.
- Never move the shift lever into P (Park) when the vehicle is in motion.
  Be sure the vehicle is completely stopped before you attempt to shift into R (Reverse) or D (Drive).
- Do not move the shift lever to N (Neutral) when driving. Doing so may result in an accident because of a loss of engine braking and the transmission could be damaged.
- Do not drive with your foot resting on the brake pedal. Even light, but consistent pedal pressure can result in the brakes overheating, brake wear and possibly even brake failure.
- Depressing both accelerator and brake pedals at the same time can trigger logic for engine power reduction to assure vehicle deceleration. Vehicle acceleration will resume after the brake pedal is released.
- When driving in Sports Mode, slow down before shifting to a lower gear. Otherwise, the lower gear may not be engaged if the engine rpms are outside of the allowable range.
- Always apply the parking brake when leaving the vehicle. Do not depend on placing the transmission in P (Park) to keep the vehicle from moving.
- Exercise extreme caution when driving on a slippery surface. Be especially careful when braking, accelerating or shifting gears. On a slippery surface, an abrupt change in vehicle speed can cause the drive wheels to lose traction and may cause loss of vehicle control resulting in an accident.
- Optimum vehicle performance and economy is obtained by smoothly depressing and releasing the accelerator.

⚠ WARNING

To reduce the risk of SERIOUS INJURY or DEATH:

- When driving uphill or downhill, always shift to D (Drive) for driving forward or shift to R (Reverse) for driving backwards, and check the gear position indicated on the cluster before driving.
  Driving in the opposite direction of the selected gear can lead to a dangerous situation by shutting

off the engine and affecting the braking performance.
- ALWAYS wear your seatbelt. In a collision, an unbelted occupant is significantly more likely to be seriously injured or killed than a properly belted occupant.
- Avoid high speeds when cornering or turning.
- Do not make quick steering wheel movements, such as sharp lane changes or fast, sharp turns.
- The risk of rollover is greatly increased if you lose control of your vehicle at highway speeds.
- Loss of control often occurs if two or more wheels drop off the roadway and the driver over steers to reenter the roadway.
- In the event your vehicle leaves the roadway, do not steer sharply. Instead, slow down before pulling back into the travel lanes.
- Do not attempt sudden or abrupt driving maneuvers on slippery surfaces. Attempting such maneuvers can result in loss of vehicle control and accidents.

✻ NOTICE

Kia recommends you follow all posted speed limits.

✻ NOTICE

Kickdown Mechanism

Use the kickdown mechanism for maximum acceleration. Depress the accelerator pedal beyond the pressure point. The automatic transmission will shift to a lower gear depending on the engine speed.

Launch Control

Launch Control Operation

- When using Launch Control, a driver should always make sure that the engine's cooling water is warmed up and reaches a recommended temperature.
- To operate ESC Off state 2, Press and hold ESC button for more than 3 seconds in Sports mode. (Status Display on Cluster Screen)
- For launching, stop the vehicle and keep the steering wheel straight.
- EPB and Auto Hold must be released for smooth launching.
- Press the brake firmly with your left foot in transmission D mode, while pressing the accelerator pedal down fully with your right foot. Then, the Launch Control Ready (1) will be in place.

Launch Control Ready (1)

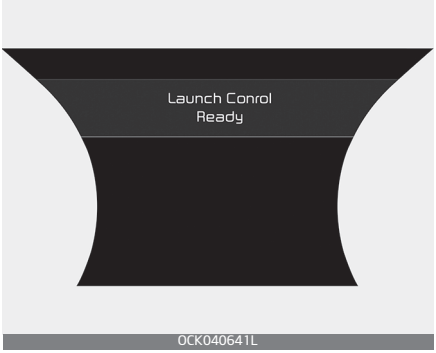

OCK040641L

- To start a vehicle, with your right foot pressing the accelerator pedal down fully, remove your left foot from the brake. (within 4 seconds) (Launch Control Active (2) Status Display on Cluster Screen)

Launch Control Active (2)

OCK040642L

- If both the brakes and accelerater pedals were applied and the driver removes his foot only from the accelerater pedal, Launch Control will be automatically deactivated. Or, if the vehicle does not start after 4 seconds with a driver's feet on both brake and accelerate pedals, Launch Control will automatically deactivated as well.
- Do not operate both brake and accelerate pedals simultaneously for longer than 4 seconds.
- When re-using Launch Control, a driver should have the vehicle cool down sufficiently by driving.

Limited use of Launch Control (3)

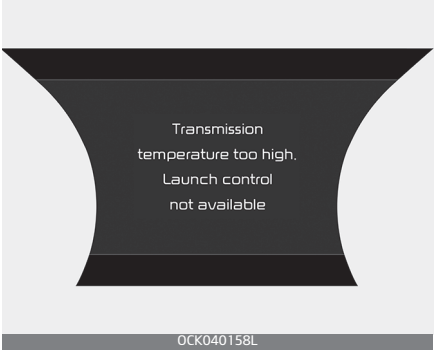

OCK040158L

- An warning message will pop up on the screen if the transmission fluid temperature is above a certain level while using Launch Control. Also, Launch Control will be automatically deactivated.
- To address the issue as above, a driver should cool down the transmission fluid temperature by driving the vehicle. (Driving at a constant speed over 37 mph (60 km/h) is highly recommended, but this should only be done if traffic and road conditions permit the driver to do so safely.)

⚠ WARNING

It is the responsibility of the driver to make sure it is safe before using Launch Control. Do not use Launch Control on public roads or when pedestrian congestion is present. Doing so could result in an accident that causes serious injuries.

✻ NOTICE

Launch performance can vary depending on fuel, environment, tire, and loading conditions.

⚠ CAUTION

Constant use of Launch Control can put enormous stress on transmission, engine, and drive shafts and can result in vehicle damage. It is highly recommended that Launch Control is used after completion of the vehicle brake-in process.

The Eco-coasting system (if equipped)

When certain conditions are met, the engine is automatically decoupled from the transmission while the shift lever is remained in D (Drive). In this ECO Coasting mode, the engine stays at idling speed to reduce fuel consumption and increase coasting distance. The engine is automatically coupled back again when ECO Coasting deactivation conditions are met. Please refer to ECO Coasting activation and deactivation conditions.

The Eco-Coasting system setting

The Eco-Coasting system activates if select the Eco-Coasting system from Infotainment System screen : "Setup → Vehicle → Drive Mode → CUSTOM" (For more details, please scan the QR code in a separately supplied Car Infotainment System Quick Reference Guide.)

When the Eco-Coasting system is activated, the message "Coasting" appears at the top center of the cluster.

⚠ CAUTION

- If the accelerator pedal is pressed quickly for accelerating with the Eco-Coasting system in operation, acceleration may occur after the

engagement of the clutch inside the transmission. In turn, the driver may continue to feel acceleration even after the system is turned off.
- Driving with the Eco-Coasting system off may be required in some cases since the engine brake is not applied while the Eco-Coasting system is in operation.
- Operation the Infotainment System screen to activate or deactivate Eco-Coasting system while driving may be dangerous as the driver's attention is dispersed.

Eco-Coasting operation conditions

The Eco-Coasting system is activated when the accelerator pedal is depressed and released under the following conditions.
- When the driving mode is ECO mode.
- When driver acceleration is SMART ECO in SMART mode.
- When the shift lever is in the D (Drive) position.
- When the Smart Cruise Control button is OFF.
- The accelerator or brake pedal is not depressed.
- When the vehicle speed is within the range of 35 mph (55 km/h) to 100 mph (160 km/h).
- If the road gradient is within the range of -5% to +5%.
- In SMART mode, if the distance between the vehicle ahead and the relative speed is within a certain range (if Smart Cruise Control is equipped)

* If the front radar for Smart Cruise Control cannot operate normally, the inter-vehicle distance and relative speed condition are automatically ignored.

* The Eco-Coasting system works after the engine is turned on, the transmission is warmed up, and the engine sensor selfdiagnosis is completed after starting.

* Depending on the driving situation, Eco-Coasting operation may be temporarily delayed even if the above conditions are met.

The Eco-Coasting system release conditions

The Eco-Coasting system will be automatically released when the following conditions are met.
- When the drive mode is COMFORT or SPORT mode.
- In SMART mode, when driver acceleration is SMART COMFORT or SMART SPORT.
- When using the paddle shift of the steering wheel.
- When the Smart Cruise Control button is on (The /CRUISE indicator is on.).

- When pressing the accelerator pedal or brake pedal.
- When the vehicle speed is outside the range of 35 mph (55 km/h) to 100 mph (160 km/h).
- Road inclination is less than -5% or exceeds +5%.
- In SMART mode, if the headway distance to the vehicle ahead is too close of the relative speed changes momentarily (if Smart Cruise Control is equipped)
- If lane change is predicated in SMART mode (LKA warning by turn signal lamp operation or steering wheel).

* It is recommended to turn off the Eco-Coasting system in the driving condition where frequent acceleration or deceleration is repeated.

Change the drive mode to COMFORT or SPORT mode, or disable Eco-Coasting mode on the Infotainment System screen.

All wheel drive (AWD) (if equipped)

Using All Wheel Drive (AWD)

The All Wheel Drive (AWD) System delivers engine power to front and rear wheels for maximum traction. AWD is useful when extra traction is required, such as when driving slippery, muddy, wet, or snow-covered roads.

If the system determines there is a need for four wheel drive, the engine's driving power is distributed to all four wheels automatically.

⚠ WARNING

If the AWD warning light ( ) stays on the instrument cluster, your vehicle may have a malfunction with the AWD system. When the AWD warning light ( ) illuminates, we recommend that the vehicle be checked by an authorized Kia dealer as soon as possible.

⚠ WARNING

To reduce the risk of SERIOUS INJURY or DEATH:

- Do not drive in conditions that exceed the vehicle's intended design such as challenging off-road conditions.

- Avoid high speeds when cornering or turning.
- Do not make quick steering wheel movements, such as sharp lane changes or fast, sharp turns.
- The risk of a rollover is greatly increased if you lose control of your vehicle at highway speeds.
- Loss of control often occurs if two or more wheels drop off the roadway and the driver over steers to reenter the roadway.
- In the event your vehicle leaves the roadway, do not steer sharply. Instead, slow down before pulling back into the travel lanes.

NOTICE

- Do not drive in water if the level is higher than the bottom of the vehicle.
- Check your brake condition once you are out of mud or water. Depress the brake pedal several times as you move slowly until you feel normal braking return.
- Shorten your scheduled maintenance interval if you drive in offroad conditions such as sand, mud or water (Refer to "Maintenance under severe usage conditions - Turbo Models (For Smartstream G2.5 FR T-GDi)" on page 7-14.).
- Make sure that AWD vehicle is towed by a flatbed tow truck.

For safe AWD operation

Before driving

- Make sure all passengers are wearing seat belts.
- Sit upright and closer to the steering wheel than usual. Adjust the steering wheel to a position comfortable for you to drive.

Driving on snow-covered or icy roads

- Start off slowly by applying the accelerator pedal gently.
- Use snow tires or tire chains.
- Keep sufficient distance between your vehicle and the vehicle in front of you.
- Use engine braking during deceleration.
- Avoid speeding, rapid acceleration, sudden brake applications, and sharp turns to prevent skids.

Driving in sand or mud

- Maintain slow and constant speed.
- Use tire chains driving in mud if necessary.
- Keep sufficient distance between your vehicle and the vehicle in front of you.

- Reduce vehicle speed and always check the road condition.
- Avoid speeding, rapid acceleration, sudden brake applications, and sharp turns to prevent getting stuck.

NOTICE

When the vehicle is stuck in snow, sand or mud, place a non-slip material under the drive wheels to provide traction OR slowly spin the wheels in forward and reverse directions which causes a rocking motion that may free the vehicle. Refer to "Rocking the vehicle" on page 5-163. However, avoid running the engine continuously at high rpm, which could damage the AWD system.

NOTICE

- When putting the tire chains to the tire, be sure to attach the chain to the two rear wheels. In this case, drive below 18 mph and minimize the driving distance. High-speed or long-term driving with putting the tire chains may cause malfunction or damage to the four-wheel drive.
- If tire chains must be used, use AutoSock (fabric snow chain) and install the tire chain after reviewing the instructions provided with the tire chains.

* For more information on Snow Tires and Tire Chains, refer to "Winter driving" on page 5-166.

Driving up or down hills

- Driving uphill
  - Before starting off, check if it is possible to drive uphill.
  - Drive as straight as possible.
- Driving downhill
  - Do not change gear while driving downhill. Select gear before driving downhill.
  - Drive slowly using engine braking while driving downhill.
  - Drive as straight as possible.

WARNING

Exercise extreme caution driving up or down steep hills. The vehicle's tires could lose traction depending on the grade, terrain and water/mud conditions.

Emergency precautions

Tires

WARNING

Do not use tires and wheels of a different size and type than the ones originally installed on your vehicle. It can affect the safety and performance of your vehicle, which could

lead to increased steering difficulty or rollover causing serious injury.

When replacing the tires, be sure to equip all four tires with the tire and wheel of the same size, type, tread, brand and load-carrying capacity.

In case of emergency such as tire puncture, repair it using TMK (Tire Mobility Kit) for temporary use. Afterwards, have the tire be inspected by an authorized Kia dealer.

⚠ WARNING

Never start or run the engine while an AWD vehicle is raised on a jack.The vehicle can slip or roll off of a jack causing serious injury or death to you or those nearby.

Towing

AWD vehicles must be towed with a wheel lift and dollies or flatbed equipment with all the wheels off the ground. For more information, refer to "Towing" on page 6-32.

Vehicle inspection

- When the vehicle is on a car lift, do not operate the front and rear wheels separately. All four wheels should be operated.
- Never engage the parking brake while running the engine on a car lift. This may damage the AWD system.

Dynamometer testing

An AWD vehicle must be tested on a special four wheel chassis dynamometer.

An AWD vehicle should not be tested on a 2WD roll tester. If a 2WD roll tester must be used, perform the following procedure:

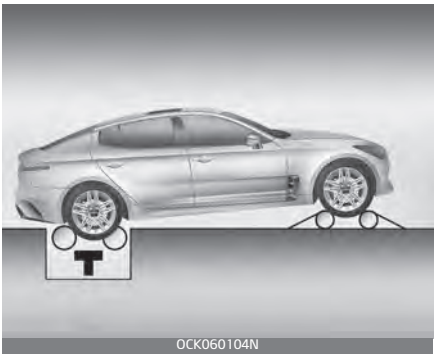

1. Check the tire pressures recommended for your vehicle.
2. Place the rear wheels on the roll tester for a speedometer test as shown in the illustration.
3. Release the parking brake.
4. Place the front wheels on the temporary free roller as shown in the illustration.

⚠ WARNING

Keep away from the front of the vehicle while the vehicle is in gear on the dynamometer. The vehicle can jump forward and cause serious injury or death.

Limited Slip Differential (LSD) (if equipped)

Limited Slip Differential (LSD) refers to a system equipped with a mechanism that controls the differential functions of the wheels in the Rear-Differential. It allows for an enhancement in handling performance during turning.

Never run wheels with one of them lifted by the jack. It is extremely dangerous for a vehicle equipped with Limited Slip Differential.

Be sure to inject oil for exclusive use of LSD when replacing Rear Differential (for LSD) Oil.

✻ NOTICE

There could be slight noises coming from friction plates inside LSD when the LSD-equipped vehicle is turning around, but it is a normal sound in the process of LSD operation and the noises don't indicate vehicle failure.

Oil change is highly recommended in case that the sound becomes louder.

Brake system

Power brakes

Your vehicle has power-assisted brakes that adjust automatically through normal usage.

In the event that the power-assisted brakes lose power because of a stalled engine or some other reason, you can still stop your vehicle by applying greater force to the brake pedal than you normally would. The stopping distance, however, will be longer.

When the engine is not running, the reserve brake power is partially depleted each time the brake pedal is applied. Do not pump the brake pedal when the power assist has been interrupted.

Pump the brake pedal only when necessary to maintain steering control on slippery surfaces.

⚠ CAUTION

Brake Pedal

Do not drive with your foot resting on the brake pedal. This will create abnormally high brake temperatures which can cause excessive brake lining and pad wear.

⚠ WARNING

Steep hill braking

Avoid continuous application of the brakes when descending a long or steep hill by shifting to a lower gear. Continuous brake application will cause the brakes to overheat and could result in a temporary loss of braking performance.

Wet brakes may impair the vehicle's ability to safely slow down; the vehicle may also pull to one side when the brakes are applied. Applying the brakes lightly will indicate whether they have been affected in this way. Always test your brakes in this fashion after driving through deep water. To dry the brakes, apply them lightly while maintaining a safe forward speed until brake performance returns to normal.

In the event of brake failure

If the service brakes fail to operate while the vehicle is in motion, you can make an emergency stop with the parking brake. The stopping distance, however, will be much greater than normal.

⚠ WARNING

Parking brake

Avoid applying the parking brake to stop the vehicle while it is moving except in an emergency situation. Applying the parking brake while the vehicle is moving at normal speeds can cause a sudden loss of control of the vehicle. If you must use the parking brake to stop the vehicle, use great caution in applying the brake.

Disc brakes wear indicator

When your brake pads are worn and new pads are required, you will hear a high-pitched warning sound from your front brakes or rear brakes. You may hear this sound come and go or it may occur whenever you depress the brake pedal.

Please remember that some driving conditions or climates may cause a brake squeal when you first apply (or lightly apply) the brakes. This is normal and does not indicate a problem with your brakes.

Always replace the front or rear brake pads as pairs.

⚠ CAUTION

Replace brake pads

Do not continue to drive with worn brake pads. Continuing to drive with worn brake pads can damage the braking system and result in costly brake repairs.

⚠ WARNING

Brake wear

Do not ignore high pitched wear sounds from your brakes. If you ignore this audible warning, you will eventually lose braking performance, which could lead to a serious accident.

Brembo Brake (if equipped)

It is normal for vehicles equipped with high-performance brakes (Large-diameter Brembo brakes for enhanced braking performance) to generate braking noises.

Also, Circular patterns caused by disc surface friction may occur. These patterns are normal and do not affect braking performance.

⚠ CAUTION

Excessive, high speed, repetitive braking may cause abnormal deformation and wear of parts even if high performance brakes are equipped on the vehicle. This wear can cause vehicle vibration when braking. Drivers should obey speed limits and avoid excessive, high speed, repetitive braking to prevent

damage. The limited warranty does not cover damage caused by excessive, high speed, repetitive braking, track driving, racing, or other abuse or misuse of the vehicle.

Check the brake warning light by turning the ENGINE START/STOP button ON (do not start the engine). This light will be illuminated when the parking brake is applied with the ENGINE START/STOP button in the START or ON position.

Before driving, be sure the parking brake is fully released and the brake warning light is off.

If the brake warning light remains on after the parking brake is released while the engine is running, there may be a malfunction in the brake system. Immediate attention is necessary.

If at all possible, cease driving the vehicle immediately. If that is not possible, use extreme caution while operating the vehicle and only continue to drive the vehicle until you can reach a safe location or repair shop.

Electronic Parking Brake

Applying the parking brake

To apply the EPB (electronic parking brake):

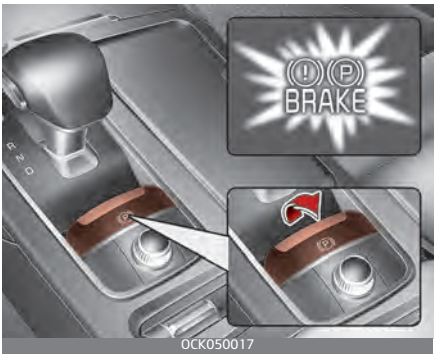

1. Depress the brake pedal.
2. Pull up the EPB switch.

Make sure the warning light comes on.

Also, the EPB is applied automatically if the Auto Hold button is on when the engine is turned off. However, if you pull up the EPB switch after the engine is turned off, the EPB will not be applied.

NOTICE

On a steep incline or when pulling a trailer, if the vehicle does not remain at a standstill, do as follows:

1. Apply the EPB.
2. Pull up the EPB switch for more than 3 seconds.

Do not operate the EPB while the vehicle is moving except in an emergency situation.

NOTICE

A click or electric brake motor whine sound may be heard while operating or releasing the EPB. These conditions are normal and indicate that the EPB is functioning properly.

Releasing the parking brake

To release the EPB (electronic parking brake), press the EPB switch while doing the following:

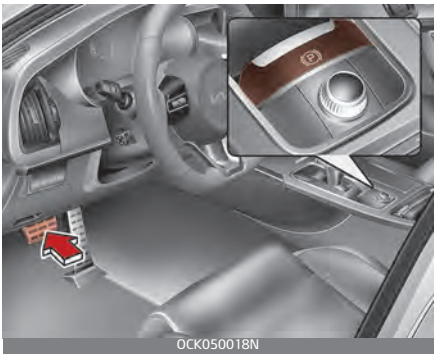

- Have the ENGINE START/STOP button in the ON position.
- Depress the brake pedal.
- The shift lever must be in P (Park).

Make sure the brake warning light goes off.

To release EPB (electronic parking brake) automatically:

- Shift lever in P (Park)
  With the engine running depress the brake pedal and shift out of P (Park) to R (Reverse) or D (Drive).
- Shift lever in N (Neutral)
  With the engine running depress the brake pedal and shift out of N (Neutral) to R (Reverse) or D (Drive).
- Automatic Transmission
  1. Close the driver's door, engine hood and liftgate.
  2. Fasten the driver's seat belt.
  3. Start the engine.
  4. Depress the accelerator pedal while the shift lever is in R (Reverse), D (Drive) or Sports mode.

Make sure the brake warning light goes off.

NOTICE

- For your safety, you can engage the EPB even though the ENGINE START/STOP button is in the OFF position, but you cannot release it.
- For your safety, depress the brake pedal and release the parking brake manually with the EPB switch when you drive downhill or when backing up the vehicle.

Do not follow the above procedure when driving on a flat level ground. The vehicle may suddenly move forward.

NOTICE

If the parking brake warning light is still on even though the EPB has been released, have the system checked by an authorized Kia dealer.

CAUTION

Do not drive your vehicle with the EPB applied. It may cause excessive brake pad and brake rotor wear.

EPB (electronic parking brake) may be automatically applied when:

- The EPB is overheated
- Requested by other systems

NOTICE

For EPB (Electronic Parking Brake) equipped vehicles with AUTO HOLD function used while driving, if the ENGINE START/STOP button has been turned OFF, the EPB will be engaged automatically. Therefore, AUTO HOLD function should be turned off before the ENGINE START/STOP button is turned off.

System warning

- If you try to drive off depressing the accelerator pedal with the EPB applied, but the EPB doesn't release automatically, a warning will sound and a message will appear.
- If the driver's seat belt is not fastened and the engine hood, driver's door or liftgate is opened, a warning will sound and a message will appear.
- If there is a problem with the vehicle, a warning may sound and a message may appear.

If the above situation occurs, depress the brake pedal and release EPB by pressing the EPB switch.

WARNING

Parking Brake Use

All vehicles should always have the parking brake fully engaged when parked to avoid inadvertent move-

ment of the car which can injure occupants or pedestrians.

- A click or electric brake motor whine sound may be heard while operating or releasing the EPB. These conditions are normal and indicate that the EPB is functioning properly.
- When leaving your keys with a parking lot attendant or valet, make sure to inform him/her how to operate the EPB.
- The EPB may malfunction if you drive with the EPB applied.
- When you automatically release EPB by depressing the accelerator pedal, depress it slowly.

System warning

OCK050345L

When the conversion from Auto Hold to EPB is not working properly, a warning will sound and a message will appear.

NOTICE

Depress the brake pedal when the above message appears for the Auto Hold and EPB may not activate.

System warning

OCK050346L

If the EPB is applied while Auto Hold is activated because of an ESC (Electronic Stability Control) signal, a warning will sound and a message will appear.

EPB malfunction indicator

Type A

Type B

This warning light illuminates if the ENGINE START/STOP button is changed to the ON position and goes off in approximately 3 seconds if the system is operating normally.

If the EPB malfunction indicator remains on, comes on while driving, or does not come on when the ENGINE START/STOP button is changed to the ON position, this indicates that the EPB may have malfunctioned.

If this occurs, have your vehicle checked by an authorized Kia dealer as soon as possible.

The EPB malfunction indicator may illuminate when the ESC indicator comes on to indicate that the ESC is not working properly, but it does not indicate a malfunction of the EPB.

- The EPB warning light may illuminate if the EPB switch operates abnormally. Shut the engine off and turn it on again after a few minutes. The warning light will go off and the EPB switch will operate normally. However, if the EPB warning light is still on, have the system checked by an authorized Kia dealer.
- If the parking brake warning light does not illuminate or blinks even though the EPB switch was pulled up, the EPB is not applied.
- If the parking brake warning light blinks when the EPB warning light is on, press the EPB switch, then pull it up. Once more press it back to its original position and pull it back up. If the EPB warning does not go off, have the system checked by an authorized Kia dealer.

Emergency braking

If there is a problem with the brake pedal while driving, emergency braking is possible by pulling up and holding the EPB switch. Braking is possible only while you are holding the EPB switch.

⚠ WARNING

Do not operate the electronic parking brake while the vehicle is moving except in an emergency situation. Applying the electronic parking brake while the vehicle is moving at normal speeds can cause a sudden loss of control of the vehicle. If you must use the electronic parking brake to stop the vehicle, use great caution in applying the brake.

✻ NOTICE

During emergency braking by the EPB, the parking brake warning light will illuminate to indicate that the system is operating.

If you notice a continuous noise or burning smell when the EPB is used for emergency braking, have your vehicle checked by an authorized Kia dealer.

When the EPB (electronic parking brake) is not released

If the EPB does not release normally, take your vehicle to an authorized Kia dealer by loading the vehicle on a flatbed tow truck and have the system checked.

Auto Hold

The Auto Hold maintains the vehicle in a standstill even though the brake pedal is not depressed after the driver brings the vehicle to a complete stop by depressing the brake pedal.

1. Depress the brake pedal, start the engine and then press the AUTO HOLD button. The white AUTO HOLD indicator will come on indicating the system is in standby. Before the Auto Hold will engage, the driver's door and engine hood must be closed and the driver's seat belt must be fastened.

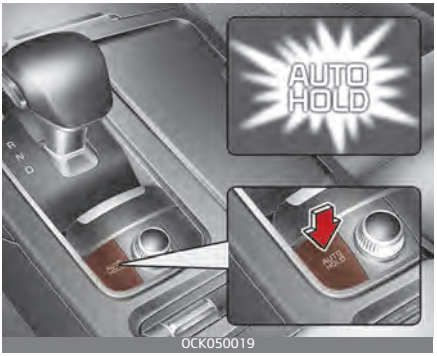

OCK050019

2. When coming to a complete stop by depressing the brake pedal,

the AUTO HOLD indicator changes from white to green indicating the AUTO HOLD is engaged. The vehicle will remain at a standstill even if you release the brake pedal.

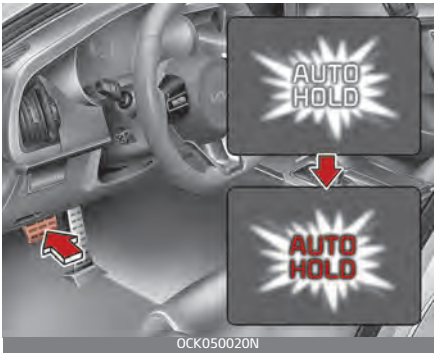

OCK050020N

3. If EPB is applied, Auto Hold will be released.
4. If you press the accelerator pedal with the shift lever in D (Drive), R (Reverse) or manual mode, the Auto Hold will be released automatically and the vehicle will start to move. The indicator changes from green to white indicating the Auto Hold is in standby and the EPB is released.

When driving off from Auto Hold by depressing the accelerator pedal, always check the surrounding area near your vehicle.

Slowly depress the accelerator pedal for a smooth launch.

Cancel

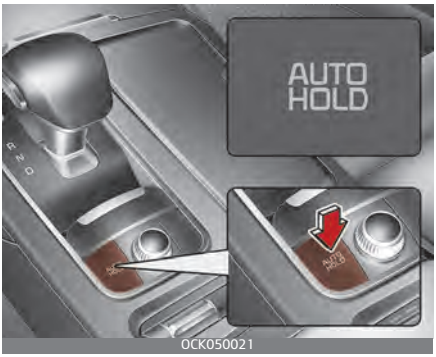

OCK050021

To cancel the AUTO HOLD operation, press the Auto Hold switch. The AUTO HOLD indicator will go out.

To cancel the Auto Hold operation when the vehicle is at a standstill, press the AUTO HOLD switch while depressing the brake pedal.

✻ NOTICE

- The following are conditions when the Auto Hold will not engage (AUTO HOLD light will not turn green and the Auto Hold system remains in stand by):
  - The driver's seat belt is unfastened and driver's door is opened
  - The engine hood is opened
  - The shift lever is in P (Park)
  - The EPB is applied
- For your safety, the Auto Hold automatically switches to EPB under any of the following conditions (AUTO HOLD light remains

white and the EPB automatically applies):
- The driver's seat belt is unfastened and driver's door is opened
- The engine hood is opened
- The vehicle is in a standstill for more than 10 minutes
- The vehicle is standing on a steep slope
- The vehicle moved for a few seconds

In these cases, the brake warning light comes on, the AUTO HOLD indicator changes from green to white, and a warning sounds and a message will appear to inform you that EPB has been automatically engaged. Before driving off again, press foot brake pedal, check the surrounding area near your vehicle and release parking brake manually with the EPB switch.

- If the AUTO HOLD indicator lights up yellow, the Auto Hold is not working properly. Take your vehicle to an authorized Kia dealer and have the system checked.

WARNING

To reduce the risk of an accident, do not activate Auto Hold while driving downhill, backing up or parking your vehicle.

If there is a malfunction with the driver's door or engine hood open detection system, the Auto Hold may not work properly.

Take your vehicle to an authorized Kia dealer and have the system checked.

NOTICE

A click or electric brake motor whine sound may be heard while operating or releasing the EPB, but these conditions are normal and indicate that the EPB is functioning properly.

Warning messages

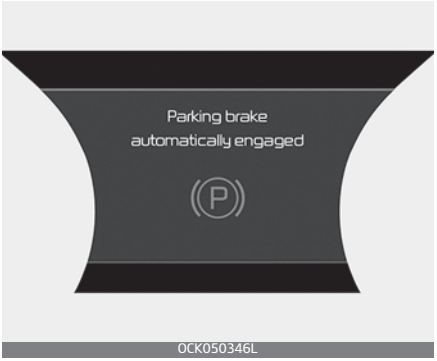

When the EPB is applied from Auto Hold, a warning will sound and a message will appear.

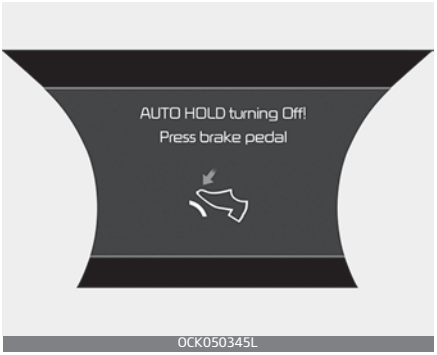

OCK050345L

When the conversion from Auto Hold to EPB is not working properly a warning will sound and a message will appear.

NOTICE

When this message is displayed, the Auto Hold and EPB may not operate. For your safety, depress the brake pedal.

OCK050347L

If you do not apply the brake pedal when you release the Auto Hold by pressing the [AUTO HOLD] switch, a warning will sound and a message will appear.

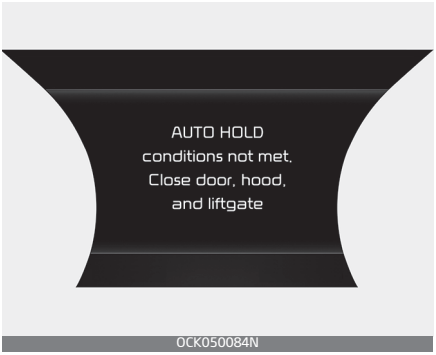

OCK050084N

When you press the [AUTO HOLD] switch, if the driver's door and engine hood are not closed or the driver's seat belt is unfastened, a warning will sound and a message will appear on the LCD display. At this moment, press the [AUTO HOLD] button after closing the driver's door and engine hood and fastening the seat belt.

Anti-lock Brake System (ABS)

ABS (or ESC) will not prevent accidents due to improper or dangerous driving maneuvers. Even though vehicle control is improved during emergency braking, always maintain a safe distance between you and objects ahead. Vehicle speeds should always be reduced during extreme road conditions. The vehicle should be driven at reduced speeds in the following circumstances:

- When driving on rough, gravel or snow-covered roads

- When driving with tire chains installed
- When driving on roads where the road surface is pitted or has different surface heights.

Driving in these conditions increases the stopping distance for your vehicle.

The ABS continuously senses the speed of the wheels. If the wheels are going to lock, the ABS system repeatedly modulates the hydraulic brake pressure to the wheels.

When you apply your brakes under conditions which may lock the wheels, you may hear a "tik-tik" sound from the brakes, or feel a corresponding sensation in the brake pedal. This is normal and it means your ABS is active.

In order to obtain the maximum benefit from your ABS in an emergency situation, do not attempt to modulate your brake pressure and do not try to pump your brakes. Press your brake pedal as hard as possible to allow the ABS to control the force being delivered to the brakes.

NOTICE

A click sound may be heard in the engine compartment when the vehicle begins to move after the engine is started. These conditions are normal and indicate that the anti-lock brake system is functioning properly.

- Even with the anti-lock brake system, your vehicle still requires sufficient stopping distance. Always maintain a safe distance from the vehicle in front of you.
- Always slow down when cornering. The anti-lock brake system cannot prevent accidents resulting from excessive speeds.
- On loose or uneven road surfaces, operation of the anti-lock brake system may result in a longer stopping distance than for vehicles equipped with a conventional brake system.

The ABS warning light will stay on for approximately 3 seconds after the ENGINE START/STOP button is ON. During that time, the ABS will go through selfdiagnosis and the light will go off if everything is normal. If the light stays on, you may have a problem with your ABS. Contact an authorized Kia dealer as soon as possible.

- When you drive on a road having poor traction, such as an icy road, and have operated your brakes continuously, the ABS will be active continuously and the ABS warning light may illuminate. Pull your vehicle over to a safe place and stop the engine.
- Restart the engine. If the ABS warning light goes off, then your ABS system is normal. Otherwise, you may have a problem with the ABS. Contact an authorized Kia dealer as soon as possible.

NOTICE

When you jump start your vehicle because of a drained battery, the engine may not run as smoothly and the ABS warning light may turn on at the same time. This happens because of low battery voltage. It does not mean your ABS has malfunctioned.

- Do not pump your brakes!
- Have the battery recharged before driving the vehicle.

Electronic Stability Control (ESC)

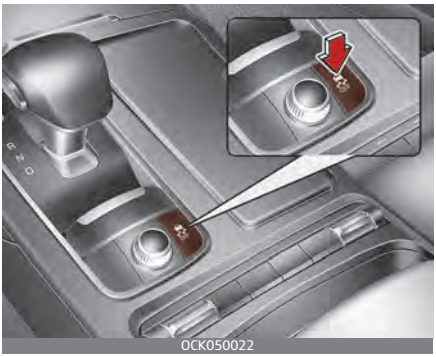

The Electronic Stability Control (ESC) system is designed to stabilize the vehicle during cornering maneuvers. ESC checks where you are steering and where the vehicle is actually going. ESC applies the brakes on individual wheels and intervenes with the engine management system to stabilize the vehicle.

Electronic Stability Control (ESC) will not prevent accidents. Excessive speed in turns, abrupt maneuvers and hydroplaning on wet surfaces can still result in serious accidents. Only a safe and attentive driver can prevent accidents by avoiding maneuvers that cause the vehicle to

lose traction. Even with ESC installed, always follow all the normal precautions for driving – including driving at safe speeds for the conditions.

⚠ WARNING

For maximum protection, always wear your seat belt. No system, no matter how advanced, can compensate for all driver error and/or driving conditions. Always drive responsibly.

The Electronic Stability Control (ESC) system is an electronic system designed to help the driver maintain vehicle control under adverse conditions. It is not a substitute for safe driving practices. Factors including speed, road conditions and driver steering input can all affect whether ESC will be effective in preventing a loss of control. It is still your responsibility to drive and corner at reasonable speeds and to leave a sufficient margin of safety.

When you apply your brakes under conditions which may lock the wheels, you may hear a "tik-tik" sound from the brakes, or feel a corresponding sensation in the brake pedal. This is normal and it means your ESC is active.

✻ NOTICE

A click sound may be heard in the engine compartment when the vehicle begins to move after the engine is started. These conditions are normal and indicate that the Electronic Stability Control System is functioning properly.

ESC operation

ESC ON condition

- When the ENGINE START/STOP button is turned ON, ESC and ESC OFF indicator lights illuminate for approximately 3 seconds, then ESC is turned on.
- Press the ESC OFF button for at least half a second after turning the ignition ON to turn ESC off. (ESC OFF indicator will illuminate). To turn the ESC on, press the ESC OFF button (ESC OFF indicator light will go off).
- When starting the engine, you may hear a slight ticking sound. This is the ESC performing an automatic system self-check and does not indicate a problem.

When operating

When the ESC is in operation, the ESC indicator light blinks.

- When the Electronic Stability Control is operating properly, you can feel a slight pulsation in the vehicle. This is only the effect of brake control and indicates nothing unusual.
- When moving out of the mud or driving on a slippery road, pressing the accelerator pedal may not cause the engine rpm (revolutions per minute) to increase.

ESC operation off

ESC OFF state

There are 2 types of ESC OFF states; Traction Control disabled and Traction & Stability Control disabled.

If the ignition is turned off when ESC is off, ESC remains off.

Upon restarting the engine, the ESC will automatically turn on again.

- **ESC off state 1**

Type A

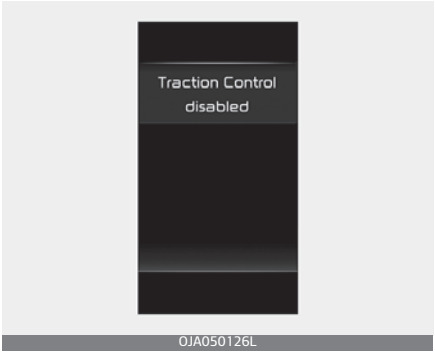

Type B

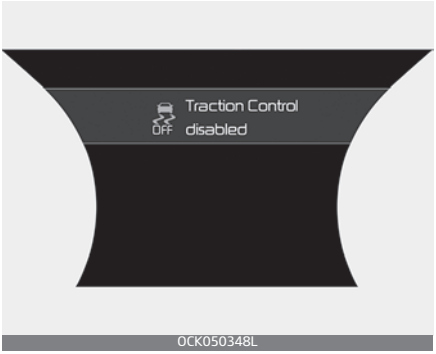

To cancel ESC operation, press the ESC OFF button (ESC OFF) shortly (ESC OFF indicator light (ESC OFF) illuminates). At this state, the engine control function does not operate. It means the traction control function does not operate. Brake control function only operates.

- **ESC off state 2**

Type A

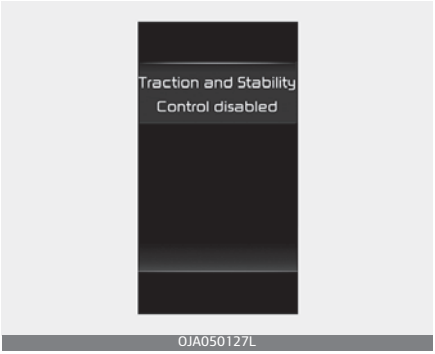

Type B

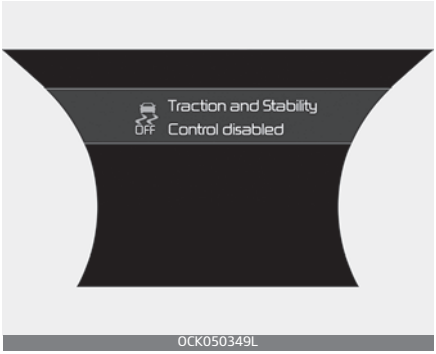

To cancel ESC operation, press the ESC OFF button (ESC OFF) for more than 3 seconds. ESC OFF indicator light (ESC OFF) illuminates and ESC OFF warning chime will sound. At this state, the engine control function and brake control function do not operate. It means the car stability control function does not operate any more.

Indicator light

ESC indicator light

ESC OFF indicator light

When the ENGINE START/STOP button is turned to ON, the indicator light illuminates, then goes off if the ESC system is operating normally.

The ESC indicator light blinks whenever ESC is operating or illuminates when ESC fails to operate.

The ESC OFF indicator light comes on when the ESC is turned off with the button.

WARNING

Electronic Stability Control

Drive carefully even though your vehicle has Electronic Stability Control. It can only assist you in maintaining control under certain circumstances.

ESC OFF usage

When driving

- ESC should be turned on for daily driving whenever possible.
- To turn ESC off while driving, press the ESC OFF button while driving on a flat road surface.

⚠ WARNING

Operating ESC

Never press the ESC OFF button while ESC is operating (ESC indicator light blinks).

If ESC is turned off while ESC is operating, the vehicle may slip out of control.

✻ NOTICE

- When operating the vehicle on a dynamometer, ensure that the ESC is turned off (ESC OFF light illuminated). If the ESC is left on, it may prevent the vehicle speed from increasing, and result in false diagnosis.
- Turning the ESC off does not affect ABS or brake system operation.

Vehicle Stability Management (VSM)

This system provides further enhancements to vehicle stability and steering responses when a vehicle is driving on a slippery road or a vehicle detects changes in coefficient of friction between right wheels and left wheels when braking.

⚠ WARNING

Tire/Wheel size

When replacing tires and wheels, make sure they are the same size as the original tires and wheels installed. Driving with varying tire or wheel sizes may diminish any supplemental safety benefits of the VSM system.

VSM operation

When the VSM is in operation, ESC indicator light (🚗) blinks.

When the vehicle stability management is operating properly, you can feel a slight pulsation in the vehicle and/or abnormal steering responses EPS (Electric Power Steering). This is only the effect of brake and EPS control and indicates nothing unusual.

The VSM does not operate when:

- Driving on a sloping road such as a gradient or incline
- Driving in reverse
- ESC OFF indicator light (OFF) remains on the instrument cluster
- EPS (Electric Power Steering) indicator light remains on the instrument cluster

VSM operation off

If you press the ESC OFF button to turn off the ESC, the VSM will also cancel and the ESC OFF indicator light ( ) illuminates.

To turn on the VSM, press the button again. The ESC OFF indicator light goes out.

WARNING

Vehicle stability management

Drive carefully even though your vehicle has Vehicle stability management. It can only assist you in maintaining control under certain circumstances.

Malfunction indicator

The VSM can be deactivated even if you don't cancel the VSM operation by pressing the ESC OFF button. It indicates that a malfunction has been detected somewhere in the Electric Power Steering system or VSM system. If the ESC indicator light (OFF) or EPS warning light remains on, take your vehicle to an authorized Kia dealer and have the system checked.

- The Vehicle Stability Management system is not a substitute for safe driving practices but a supplementary function only. It is the responsibility of the driver to always check the speed and the distance to the vehicle ahead. Always hold the steering wheel firmly while driving.
- Your vehicle is designed to activate according to the driver's intention, even with installed VSM. Always follow all the normal precautions for driving at safe speeds for the conditions – including driving in inclement weather and on a slippery road.

WARNING

For maximum protection, always wear your seat belt. No system, no matter how advanced, can compensate for all driver error and/or driving conditions. Always drive responsibly.

Hill-start Assist Control (HAC)

A vehicle has the tendency to roll back on a steep hill when it starts to go after stopping. The Hill-start Assist Control (HAC) prevents the vehicle from rolling back by applying

the brakes automatically for about 2 seconds. The brakes are released when the accelerator pedal is depressed or after about 2 seconds.

The HAC is activated only for about 2 seconds, so when the vehicle is starting off always depress the accelerator pedal.

⚠ WARNING

Maintaining Brake Pressure on Incline

HAC does not replace the need to apply brakes while stopped on an incline. While stopped, make sure you maintain brake pressure sufficient to prevent your vehicle from rolling backward and causing an accident. Don’t release the brake pedal until you are ready to accelerate forward.

Good braking practices

- Check to be sure the parking brake is not engaged and the parking brake indicator light is out before driving away.
- Driving through water may get the brakes wet. They can also get wet when the vehicle is washed. Wet brakes can be dangerous! Your vehicle will not stop as quickly if the brakes are wet. Wet brakes may cause the vehicle to pull to one side.

  To dry the brakes, apply the brakes lightly until the braking action returns to normal, taking care to keep the vehicle under control at all times. If the braking action does not return to normal, stop as soon as it is safe to do so and call an authorized Kia dealer for assistance.
- Don't coast down hills with the vehicle out of gear.This is extremely hazardous. Keep the vehicle in gear at all times, use the brakes to slow down, then shift to a lower gear so that engine braking will help you maintain a safe speed.
- Don't "ride" the brake pedal. Resting your foot on the brake pedal while driving can be dangerous because the brakes might overheat and lose their effectiveness. It also increases the wear of the brake components.
- If a tire goes flat while you are driving, apply the brakes gently and keep the vehicle pointed straight ahead while you slow down. When you are moving slowly enough for it to be safe to do so, pull off the road and stop in a safe place.
- If your vehicle is equipped with an Automatic Transmission, don't let your vehicle creep forward. To avoid creeping forward, keep your foot firmly on the brake pedal when the vehicle is stopped.

- Be cautious when parking on a hill. Firmly engage the parking brake and place the shift lever in P (automatic transmission). If your vehicle is facing downhill, turn the front wheels into the curb to help keep the vehicle from rolling.
  If your vehicle is facing uphill, turn the front wheels away from the curb to help keep the vehicle from rolling. If there is no curb or if it is required by other conditions to keep the vehicle from rolling, block the wheels.
- Under some conditions your parking brake can freeze in the engaged position. This is most likely to happen when there is an accumulation of snow or ice around or near the rear brakes or if the brakes are wet. If there is a risk that the parking brake may freeze, apply it only temporarily while you put the shift lever in P (automatic transmission) and block the rear wheels so the vehicle cannot roll. Then release the parking brake.
- Do not hold the vehicle on an incline with the accelerator pedal. This can cause the transmission to overheat. Always use the brake pedal or parking brake.

Electronic Control Suspension (ECS) (if equipped)

The Electronic Control Suspension (ECS) controls the vehicle suspension automatically to maximize driving comfort by taking into account the driving conditions such as speed, surface of the road, cornering, stopping requirements and acceleration. If the ECS warning message “Check Electronic Suspension” comes on, you may have a problem with the ECS system. In this case, have your vehicle inspected by an authorized Kia dealer.

Brake Assist System (BAS)

The BAS system is to reduce or to avoid accident risk. It recognizes the distance from the vehicle ahead orthe pedestrian through the sensors (i.e. radar and camera), and, if necessary, warns the driver of accident risk with the warning message or the warning alarms.

⚠ WARNING

Brake Assist System (BAS) Limitations

The BAS system is a supplemental system and is not a substitute for safe driving practices. It is the responsibility of the driver to always check the speed and distance to the

vehicle ahead to ensure it is safe to use.

NOTICE

Take the following precautions when using the Brake Assist System (BAS):

This system is only a supplemental system and it is not intended to, nor does it replace the need for extreme care and attention of the driver. The sensing range and objects detectable by the sensors are limited. Pay attention to the road conditions at all times. NEVER drive too fast in accordance with the road conditions or while cornering. Always drive cautiously to prevent unexpected and sudden situations from occurring. BAS does not stop the vehicle completely and does not avoid collisions.

Low Vacuum Assist (LVA) (if equipped)

Low Vacuum Assist (LVA) amplifies the hydraulic brake force to assist the driver under low or temporarily low engine vacuum. You may hear a motor running sound and feel a slight vibration in the brake pedal like ABS operating. This indicates that the Supplemental Brake System is working to maintain braking power.

WARNING

Low Vacuum Assist (LVA) will not prevent accidents due to improper or dangerous driving maneuvers.

Drive mode integrated control system

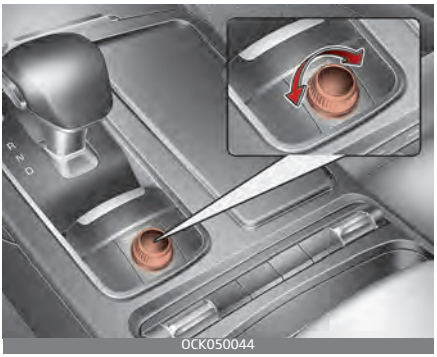

The drive mode may be selected according to the driver's preference or road condition.

The mode changes whenever the DRIVE MODE button is turned.

- SMART mode : SMART mode automatically adjusts the driving mode (ECO ↔ COMFORT ↔ SPORT) in accordance with the driver's driving habits.
- COMFORT mode : COMFORT mode provides smooth driving and a comfortable ride.
- SPORT mode : SPORT mode provides a sporty but firm ride.
- CUSTOM mode : CUSTOM mode allows the driver to mix aspects of other driving modes to make a customized mode.
- ECO mode : ECO mode improves fuel efficiency for eco-friendly driving.

If it is in ECO mode, ECO mode will be set when the engine is restarted. (However, if it is in SMART/COMFORT/SPORT/CUSTOM mode, the drive mode will be set to COMFORT mode when the engine is restarted.)

NOTICE

- When you mildly drive the vehicle in SMART mode, the drive mode changes to ECO mode to improve fuel efficiency. However, the actual fuel efficiency may differ in accordance with your driving situations (i.e. upward/downward slope, vehicle deceleration/acceleration).
- When you dynamically drive the vehicle in SMART mode by abruptly decelerating or sharply turning, the drive mode changes to SPORT mode. However, it may adversely affect fuel economy.

Various drive situations, which you may encounter in SMART mode

- The drive mode automatically changes to ECO mode after a certain period of time, when you gently depress the accelerator pedal (Your drive is categorized to be mild.).
- The drive mode automatically changes from SMART ECO mode to SMART COMFORT mode after a certain period of time, when you sharply or repetitively depress the accelerator pedal.

- The drive mode automatically changes to SMART COMFORT mode with the same driving patterns, when the vehicle starts to drive on an upward slope of a certain angle. The drive mode automatically returns to SMART ECO mode, when the vehicle enters a leveled road.
- The drive mode automatically changes to SMART SPORT, when you abruptly accelerate the vehicle or repetitively operate the steering wheel (Your driving is categorized to be sporty.). In this mode, your vehicle drives in a lower gear for abrupt accelerating/decelerating and increases the engine brake performance.
- You may still sense the engine brake performance, even when you release the accelerator pedal in SMART SPORT mode. It is because your vehicle remains in a lower gear over a certain period of time.
- The drive mode automatically changes to SMART SPORT mode only in dynamic driving situations. In most of the normal driving situations, the drive mode sets to be either in SMART ECO mode or in SMART COMFORT mode.

Limitation of SMART mode

The SMART mode may be limited in following situations. (The OFF indicator illuminates in those situations.)

- The driver manually moves the shift lever : It deactivates SMART mode.
- Smart Cruise Control is activated : Smart Cruise Control may deactivate the SMART mode. (SMART mode is not automatically deactivated just by activing Smart Cruise Control.)
- The transmission oil temperature is either extremely low or extremely high : The SMART mode can be active in most of the normal driving situations. However, an extremely high/ low transmission oil temperature may temporarily deactivate the SMART mode, because the transmission condition is out of normal operation condition.

SPORT mode

SPORT mode manages the driving dynamics by automatically adjusting the steering effort, and the engine and transmission control logic for enhanced driver performance.

- When SPORT mode is selected by using the DRIVE MODE button, the SPORT indicator (orange color) will illuminate.
- Whenever the engine is restarted, the Drive Mode will revert back to COMFORT mode. If SPORT mode is

desired, re-select SPORT mode from the DRIVE MODE button.
- When SPORT mode is activated:
  - The engine rpm will tend to remain raised over a certain length of time even after releasing the accelerator
  - Upshifts are delayed when accelerating

✻ NOTICE

In SPORT mode, the fuel efficiency may decrease.

CUSTOM mode

CUSTOM mode enables driver to build their own customized mode. Driver can choose between different Engine/Transmission, Steering, Suspension, AWD, and Active Engine Sound settings.
- To access CUSTOM mode settings rotate the Drive Mode knob until getting to CUSTOM mode. A Graphic picture of Kia Stinger will pop up on main screen with a setting button. Use the setting button and change different settings to build your own mode.
- Once the CUSTOM mode settings are chosen they will be saved and will remain that way until changed again in settings.
- Whenever the engine is restarted, the Drive Mode will revert back to COMFORT mode. If CUSTOM mode is desired, re-select CUSTOM mode from the DRIVE MODE button.

ECO mode

When the Drive Mode is set to ECO mode, the engine and transmission control logic are changed to maximize fuel efficiency.
- When ECO mode is selected by using the DRIVE MODE button, the ECO indicator (green color) will illuminate.
- If the vehicle is set to ECO mode, when the engine is turned OFF and restarted the Drive Mode setting will remain in ECO mode.

✻ NOTICE

Fuel efficiency depends on the driver's driving habits and road condition.

When ECO mode is activated:
- The acceleration response may be slightly reduced if the accelerator pedal is depressed moderately.
- The air conditioner performance may be limited.
- The shift pattern of the automatic transmission may change.
- The engine noise may get louder.

The above situations are normal conditions when ECO mode is activated to improve fuel efficiency.

Limitation of ECO mode operation:

If the following conditions occur while ECO mode is operating, the system operation is limited even though there is no change in the ECO indicator.

- When the coolant temperature is low:
  The system will be limited until engine performance becomes normal.
- When driving up a hill:
  The system will be limited to gain power when driving uphill because engine torque is restricted.
- When driving the vehicle with the automatic transmission gear shift lever in manual mode.
  The system will be limited according to the shift location.

Forward Collision-Avoidance Assist (FCA) (Sensor fusion)

Basic function

Forward Collision-Avoidance Assist is designed to help detect and monitor the vehicle ahead or help detect a pedestrian or cyclist in the roadway and warn the driver that a collision is imminent with a warning message and an audible warning, and if necessary, apply emergency braking.

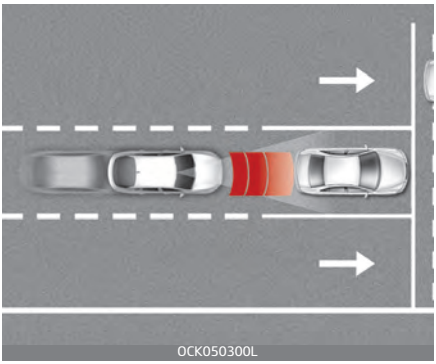

Junction Turning function

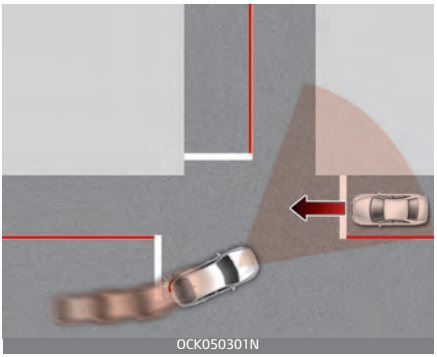

Junction Turning function will help avoid a collision with an oncoming vehicle in an adjacent lane when turning left at a crossroad with the turn signal on by applying emergency braking.

✻ NOTICE

FCA stands for Forward Collision-Avoidance Assist.

Detecting sensor

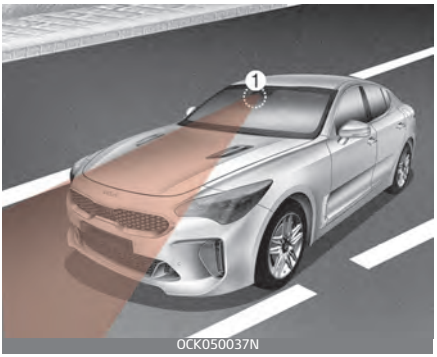

[1]: Front view camera, [2]: Front radar

Refer to the picture above for the detailed location of the detecting sensors.

⚠ CAUTION

Take the following precautions to maintain optimal performance of the detecting sensor:

- Never disassemble the detecting sensor or sensor assembly, or apply any impact on it.
- If the detecting sensors have been replaced or repaired, have

your vehicle inspected by an authorized Kia dealer.

- Never install any accessories or stickers on the front windshield, or tint the front windshield.
- Pay extreme caution to keep the front view camera dry.
- Never place any reflective objects (i.e. white paper, mirror) over the dashboard. Any light reflection may prevent the function from functioning properly.
- Do not apply license plate frame or objects, such as a bumper sticker, film or a bumper guard, near the front radar cover.
- Always keep the front radar and cover clean and free of dirt and debris. Use only a soft cloth to wash the vehicle. Do not spray pressurized water directly on the sensor or sensor cover.
- If unnecessary force has been applied to the radar or around the radar, Forward Collision-Avoidance Assist may not properly operate even though a warning message does not appear on the cluster. In this case, have your vehicle inspectedby an authorized Kia dealer.
- Use only genuine parts to repair or replace a damaged front radar cover. Do not apply paint to the front radar cover.

Function settings

Setting

Forward Safety

With the ENGINE START/STOP button in the ON position, select 'Driver Assistance → Forward Safety' from the setting menu to set whether or not to use each function.

- If 'Active Assist' is selected, the function will warn the driver with a warning message, an audible warning depending on the collision risk levels.
- If 'Warning Only' is selected, the function will warn the driver with a warning message, an audible warning depending on the collision risk levels.
- If 'Off' is selected, the function will off. The warning light will illuminate on the cluster.

The driver can monitor Forward Collision-Avoidance Assist ON/OFF status from the Settings menu. If the warning light remains ON when the function is ON, have the function checked by an authorized Kia dealer.

WARNING

- When the engine is restarted, Forward Collision-Avoidance Assist will always turn on.
- If 'Off' is selected from the Setting menu, the Forward Collision Assist will not operate so the driver should always be aware of the surroundings and drive safely.

CAUTION

- If 'Warning Only' is selected, braking is not assisted.
- The settings for Forward Safety system include 'Basic function' and 'Junction Turning'.

NOTICE

Forward Collision-Avoidance Assist will turn off when ESC is turned off by pressing and holding the ESC OFF button and the warning light will illuminate.

Warning Timing

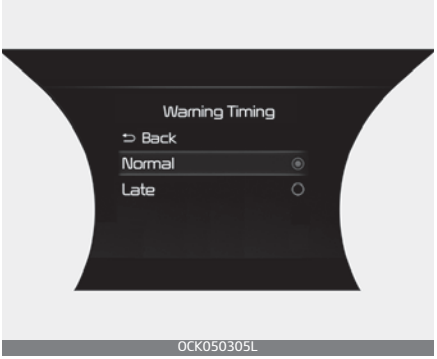

OCK050305L

With the ENGINE START/STOP button in the ON position, select 'Driver Assistance → Warning Timing' from the "User Settings (LCD display) or Setup → Vehicle (Infotainment System screen)" menu to change the initial warning activation time for Forward Collision-Avoidance Assist.

When the vehicle is first delivered, Warning Timing is set to 'Normal'. If you change the Warning Timing, the warning time of other Driver Assistance systems may change.

Warning Volume

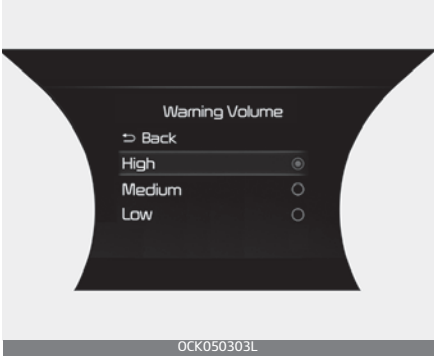

OCK050303L

With the ENGINE START/STOP button in the ON position, select 'Driver Assistance → Warning Volume' from the "User Settings (LCD display) or Setup → Vehicle (Infotainment System screen)" menu to change the Warning Volume to 'High', 'Medium', 'Low' for Forward Collision-Avoidance Assist.

If you change the warning volume, the Warning Volume of other Driver Assistance systems may change.

⚠ CAUTION

- The setting of the Warning Timing and Warning Volume applies to all functions of Forward Collision-Avoidance Assist.
- Even though 'Normal' is selected for Warning Timing, if the front vehicle suddenly stops, the initial warning activation time may not seem late.
- Select 'Late' for Warning Timing when traffic is light and when driving speed is slow.

✻ NOTICE

If the engine is restarted, Warning Timing and Warning Volume will maintain the last setting.

✻ NOTICE

If your vehicle is equipped with additional Infotainment System, please scan the QR code in a separately supplied Car Infotainment System Quick Reference Guide.

Function operation

Basic function

Function warning and control

The basic function for Forward Collision-Avoidance Assist is to warn and control the vehicle depending on the collision level: 'Collision Warning', 'Emergency Braking' and 'Stopping vehicle and ending brake control'.

Collision Warning

OCK050216L

- To warn the driver of a collision, the 'Collision Warning' warning message will appear on the cluster, an audible warning will sound.
- If a vehicle is detected in front, the function will operate when your vehicle speed is between approximately 6~120 mph (10~200 km/h).
- If a pedestrian or cyclist is detected in front, the function will operate when your vehicle speed is between approximately 6~53 mph (10~85 km/h).
- If 'Active Assist' is selected, braking may be assisted.

Emergency Braking

OCK050217L

- To warn the driver that emergency braking will be assisted, the 'Emergency Braking' warning message will appear on the cluster, an audible warning will sound.
- If a vehicle is detected in front, the function will operate when your vehicle speed is between approximately 6~47 mph (10~75 km/h).
- If a pedestrian or cyclist is detected in front, the function will operate when your vehicle speed is between approximately 6~40 mph (10~65 km/h).
- In emergency braking situation, braking is assisted with strong braking power by the function to help prevent collision with the vehicle, pedestrian or cyclist ahead.

Stopping vehicle and ending brake control

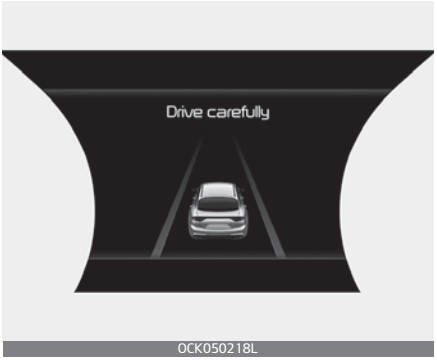

OCK050218L

- When the vehicle is stopped due to emergency braking, the 'Drive carefully' warning message will appear on the cluster.
- For your safety, the driver should depress the brake pedal immediately and check the surroundings.
- Brake control will end after the vehicle is stopped by emergency braking for approximately 2 seconds.

Junction Turning function

Function warning and control

Junction Turning function will warn and control the vehicle depending on the collision level: 'Collision Warning', 'Emergency Braking' and 'Stopping vehicle and ending brake control'

Collision Warning

OCK050219L

- To warn the driver of a collision, the 'Collision Warning' warning message will appear on the cluster, an audible warning will sound.
- The function will operate when your vehicle speed is between approximately 6~19 mph (10~30 km/h) and the oncoming vehicle speed is between approximately 19~44 mph (30~70 km/h).
- If 'Active Assist' is selected, braking may be assisted.

Emergency Braking

OCK050220L

- To warn the driver that emergency braking will be assisted, the 'Emergency Braking' warning message will appear on the cluster, an audible warning will sound.
- The function will operate when your vehicle speed is between approximately 6~19 mph (10~30 km/h) and the oncoming vehicle speed is between approximately 19~44 mph (30~70 km/h).
- In emergency braking situation, braking is assisted with strong braking power by the function to help prevent collision with the oncoming vehicle.

Stopping vehicle and ending brake control

OCK050218L

- When the vehicle is stopped due to emergency braking, the 'Drive carefully' warning message will appear on the cluster.
- For your safety, the driver should depress the brake pedal immediately and check the surroundings.
- Brake control will end after the vehicle is stopped by emergency braking for approximately 2 seconds.

⚠ WARNING

- For your safety, change the Settings after parking the vehicle at a safe location.
- With 'Active Assist' or 'Warning Only' selected, when ESC is turned off by pressing and holding the ESC OFF button, Forward Collision-Avoidance Assist will turn off automatically. In this case, the function cannot be set from the Settings menu and the warning light will illuminate on the cluster

which is normal. If ESC is turned on by pressing the ESC OFF button, Forward Collision-Avoidance Assist will maintain the last setting.

- Forward Collision-Avoidance Assist does not operate in all situations or cannot avoid all collisions.
- The driver should hold the responsibility to control the vehicle. Do not solely depend on Forward Collision-Avoidance Assist. Rather, maintain a safe braking distance, and if necessary, depress the brake pedal to reduce driving speed or to stop the vehicle.
- Never deliberately operate Forward Collision-Avoidance Assist on people, animal, objects, etc. It may cause serious injury or death.
- Forward Collision-Avoidance Assist may not operate if the driver depresses the brake pedal to avoid collision.
- Depending on the road and driving conditions, Forward Collision-Avoidance Assist may warn the driver late or may not warn the driver.
- During Forward Collision-Avoidance Assist operation, the vehicle may stop suddenly injuring passengers and shifting loose objects. Always have the seat belt on and keep loose objects secured.
- If any other function's warning message is displayed or audible warning is generated, Forward Collision-Avoidance Assist warning message may not be displayed and audible warning may not be generated.
- You may not hear the warning sound of Forward Collision-Avoidance Assist if the surrounding is noisy.
- Forward Collision-Avoidance Assist may turn off or may not operate properly or may operate unnecessarily depending on the road conditions and the surroundings.

WARNING

- Even if there is a problem with Forward Collision-Avoidance Assist, the vehicle's basic braking performance will operate normally.
- During emergency braking, braking control by the function will automatically cancel when the driver excessively depresses the accelerator pedal or sharply steers the vehicle.

CAUTION

- Depending on the condition of the vehicle, pedestrian and cyclist in front and the surroundings, the

speed range to operate Forward Collision-Avoidance Assist may reduce. The function may only warn the driver, or the function may not operate.

- It operates only under certain conditions by judging the danger according to a condition of the oncoming vehicle, driving direction, speed and the surrounding environment.

✻ NOTICE

In a situation collision is imminent, braking may be assisted by Forward Collision-Avoidance Assist when braking is insufficient by the driver.

Function malfunction and limitations

Function malfunction

OCK050221L

When Forward Collision-Avoidance Assist is not working properly, the 'Check Forward Safety system' warning message will appear, and the and warning lights will illuminate on the cluster. In this case, have the vehicle inspected by an authorized Kia dealer.

Function disabled

OCK050222L

OCK050223L

When the front windshield where the front view camera is located, front radar cover or sensor is covered with foreign material such as snow or rain, it can reduce the detecting performance and temporarily limit or disable Forward Collision-Avoidance Assist. If this occurs the 'Forward Safety system dis-

abled. Radar blocked' warning message, and the and warning lights will illuminate on the cluster.

The function will operate normally when snow, rain or foreign matter is removed. If the function does not operate normally after it is removed, have the vehicle inspected by authorized Kia dealer.

WARNING

- Even though the warning message or warning light does not appear on the cluster, Forward Collision-Avoidance Assist may not properly operate.
- Forward Collision-Avoidance Assist may not properly operate in an area (e.g. open terrain), where any substance are not detected after turning ON the engine.

Limitations of the function

Forward Collision-Avoidance Assist may not operate normally, or the function may operate unexpectedly under the following circumstances:

- The detecting sensor or the surroundings are contaminated or damaged
- The temperature around the front view camera is high or low due to the external environment
- The camera lens is contaminated due to tinted, filmed or coated windshield, damaged glass, or stuck of foreign matters (sticker, bug, etc.) on the glass
- Moisture is not removed or frozen on the windshield
- Washer fluid is continuously sprayed, or the wiper is on
- Driving in heavy rain or snow, or thick fog
- The field of view of the front view camera is obstructed by sun glare
- Street light or light from an oncoming vehicle is reflected on the wet road surface, such as a puddle on the road
- An object is placed on the dashboard
- Your vehicle is being towed
- The surrounding is very bright
- The surrounding is very dark, such as in a tunnel, etc.
- The brightness changes suddenly, for example when entering or exiting a tunnel
- The brightness outside is low, and the headlamps are not on or are not bright
- Driving through steam, smoke or shadow
- Only part of the vehicle, pedestrian or cyclist is detected
- The vehicle in front is a bus, heavy truck, truck with a unusually shaped luggage, trailer, etc.

- The vehicle in front has no tail lights, tail lights are located unusually, etc.
- The brightness outside is low, and the tail lamps are not on or are not bright
- The rear of the front vehicle is small or the vehicle does not look normal, such as when the vehicle is tilted, overturned, or the side of the vehicle is visible, etc.
- The front vehicle's ground clearance is low or high
- A vehicle, pedestrian or cyclist suddenly cuts in front
- The bumper around the front radar is impacted, damaged or the front radar is out of position
- The temperature around the front radar is high or low
- Driving through a tunnel or iron bridge
- Driving in large areas where there are few vehicles or structures (i.e. desert, meadow, suburb, etc.)
- Driving near areas containing metal substances, such as a construction zone, railroad, etc.
- A material is near that reflects very well on the front radar, such as a guardrail, nearby vehicle, etc.
- The cyclist in front is on a bicycle made of material that does not reflect on the front radar
- The vehicle in front is detected late
- The vehicle in front is suddenly blocked by a obstacle
- The vehicle in front suddenly changes lane or suddenly reduces speed
- The vehicle in front is bent out of shape
- The front vehicle's speed is fast or slow
- The vehicle in front steers in the opposite direction of your vehicle to avoid a collision
- With a vehicle in front, your vehicle changes lane at low speed
- The vehicle in front is covered with snow
- You are departing or returning to the lane
- You are driving unstably
- You are on a roundabout and the vehicle in front is not detected
- You are continuously driving in a circle
- The vehicle in front has an unusual shape
- The vehicle in front is driving uphill or downhill
- The pedestrian or cyclist is not fully detected, for example, if the pedestrian is leaning over or is not fully walking upright
- The pedestrian or cyclist is wearing clothing or equipment that makes it difficult to detect as a pedestrian or cyclist

Following image shows the image the sensor recognizes as vehicle, pedestrian, and cyclist.

OADAS044

- The pedestrian or cyclist in front is moving very quickly
- The pedestrian or cyclist in front is short or is posing a low posture
- The pedestrian or cyclist in front has impaired mobility
- The pedestrian or cyclist in front is moving intersected with the driving direction
- There is a group of pedestrians, cyclists or a large crowd in front
- The pedestrian or cyclist is wearing clothing that easily blends into the background, making it difficult to detect
- The pedestrian or cyclist is difficult to distinguish from the similar shaped structure in the surroundings
- You are driving by a pedestrian, cyclist traffic signs, structures, etc. near the intersection
- Driving in a parking lot
- Driving through a tollgate, construction area, unpaved road, partial paved road, uneven road, speed bumps, etc.
- Driving on an incline road, curved road, etc.
- Driving through a roadside with trees or streetlights
- The adverse road conditions cause excessive vehicle vibrations while driving
- Your vehicle height is low or high due to heavy loads, abnormal tire pressure, etc.
- Driving through a narrow road where trees or grass or overgrown
- There is interference by electromagnetic waves, such as driving in an area with strong radio waves or electrical noise

WARNING

- ***Driving on a curve***

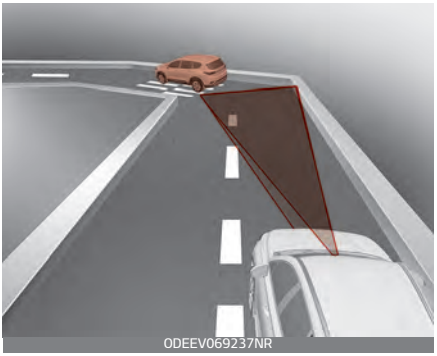

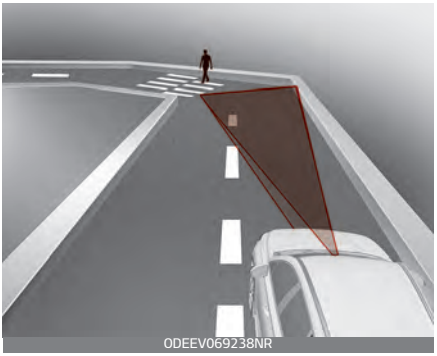

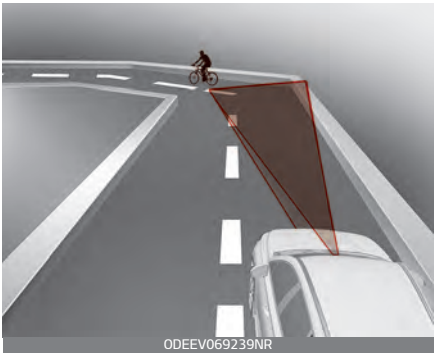

The front view camera or radar sensor recognition function may not detect the vehicle, pedestrian or cyclist traveling in front on a curved road.

Always pay attention to road and driving conditions, and if necessary, depress the brake pedal to reduce your driving speed in order to maintain a safe distance.

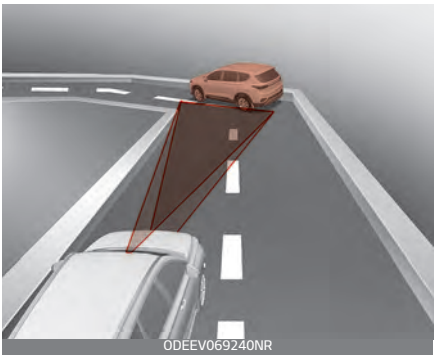

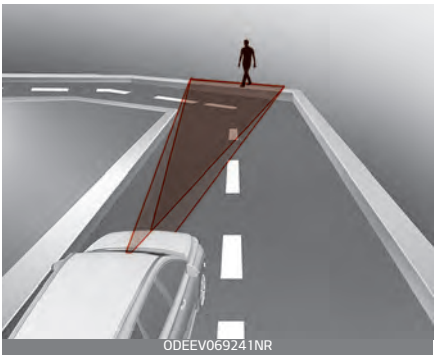

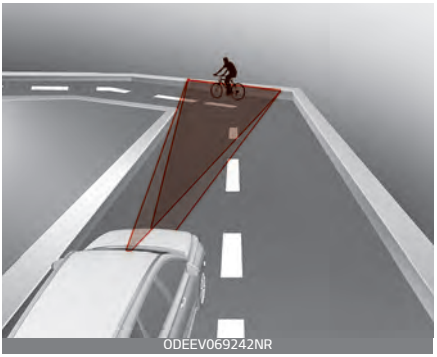

Forward Collision-Avoidance Assist may detect a vehicle or pedestrian in the next lane or outside the lane when driving on a curved road. If this occurs, the unnecessarily alarm the driver and apply the brake. Always check the traffic conditions around the vehicle.

- ***Driving on a slope***

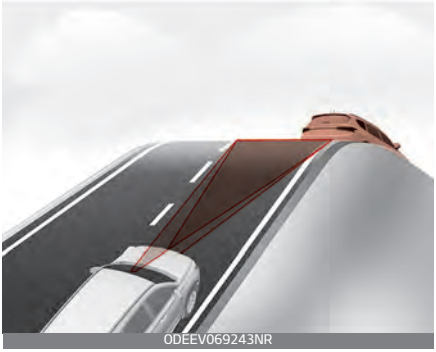
ODEEV069243NR

ODEEV069244NR

ODEEV069245NR

Forward Collision-Avoidance Assist may not detect other vehicle, pedestrian or cyclist in front while driving uphill or downhill and this may result in no warning, braking assist or steering assist when necessary.

When the function suddenly recognizes the vehicle, pedestrian or cyclist in front while passing over a slope, you may experience sharp deceleration.

Always keep your eyes forward while driving upward or downward on a slope, and, if necessary, depress the brake pedal to reduce your driving speed in order to maintain distance.

- ***Changing lanes***

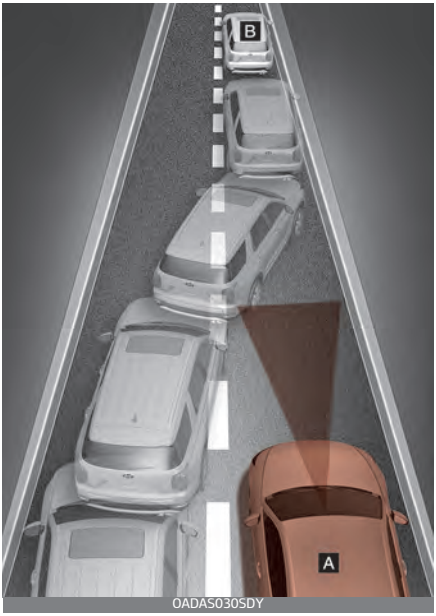

[A]: Your vehicle, [B]: Lane changing vehicle

When a vehicle changes lanes in front of you, FCA may not immediately detect the vehicle, especially if the vehicle changes lanes abruptly. In this case, you must maintain a safe braking distance, and if necessary, depress the brake pedal to reduce your driving speed in order to maintain a safe distance.

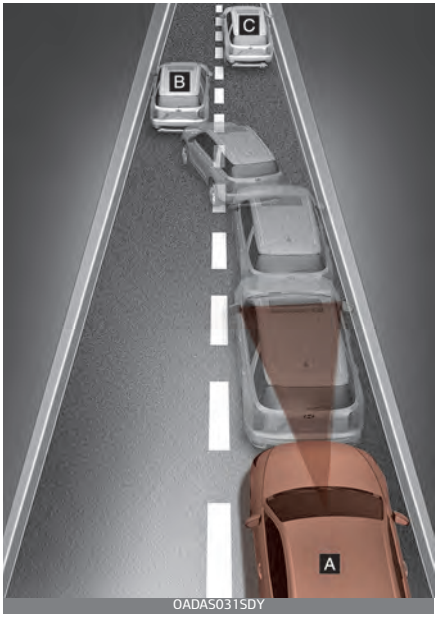

[A]: Your vehicle, [B]: Lane changing vehicle, [C]: Same lane vehicle

When driving in stop-and-go traffic, and a stopped vehicle in front of you merges out of the lane, FCA may not immediately detect the new vehicle that is now in front of you. In this case, you must maintain a safe braking distance, and if necessary, depress the brake pedal to reduce your driving speed in order to maintain a safe distance.

- ***Recognizing the vehicle***

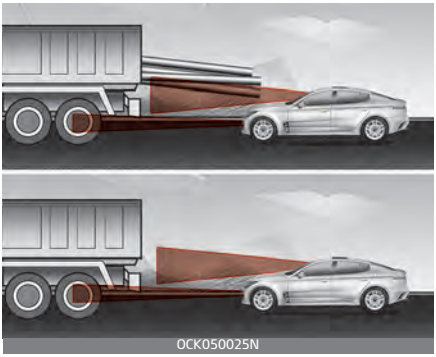

When the vehicle in front has heavy loading extended rearward, or when the vehicle in front has higher ground clearance, it may induce a hazardous situation. Always pay attention to road and driving conditions, while driving and, if necessary, depress the brake pedal to reduce your driving speed in order to maintain distance.

⚠ WARNING

- When you are towing a trailer or another vehicle, we recommend that Forward Collision-Avoidance Assist is turned off due to safety reasons.
- Forward Collision-Avoidance Assist may operate if objects that are similar in shape or characteristics to vehicles, pedestrians or cyclists are detected.
- Forward Collision-Avoidance Assist does not operate on bicycles, motorcycles, or smaller wheeled objects, such as luggage bags, shopping carts, or strollers that are dragged by a pedestrian or a cyclist.
- Forward Collision-Avoidance Assist may not operate normally if interfered by strong electromagnetic waves.
- Forward Collision-Avoidance Assist may not operate for 15 seconds after the vehicle is started, or the front view camera is initialized.

This device complies with Part 15 of the FCC rules.

Operation is subject to the following two conditions:

1. This device may not cause harmful interference, and
2. This device must accept any interference received, including interference that may cause undesired operation.

CAUTION TO USERS

Changes or modifications not expressly approved by the party responsible for compliance could void the user's authority to operate the equipment.

Radio frequency radiation exposure information:

This equipment complies with FCC radiation exposure limits set forth for an uncontrolled environment. This equipment should be installed and operated with minimum distance of 8 in (20 cm) between the radiator (antenna) and your body.

This transmitter must not be co-located or operating in conjunction with any other antenna or transmitter.

Lane Keeping Assist (LKA)

Lane Keeping Assist is designed to help detect the lane markers (or road edges) while driving over a certain speed. The function will warn the driver if the vehicle leaves the lane without using the turn signal, or will automatically assist the driver's steering to help prevent the vehicle from departing the lane.

NOTICE

LKA stands for Lane Keeping Assist.

Detecting sensor

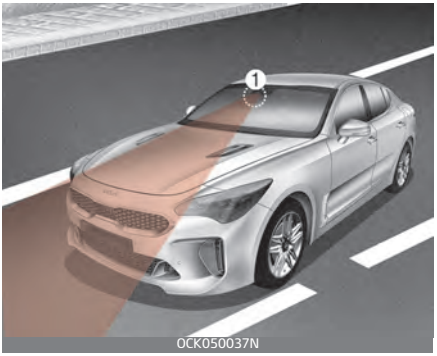

[1]: Front view camera

The front view camera is used as a detecting sensor to detect lane markings (or road edges).

Refer to the picture above for the detailed location of the detecting sensor.

⚠ CAUTION

For more details on the precautions of the front view camera, refer to "Forward Collision-Avoidance Assist (FCA) (Sensor fusion)" on page 5-65.

Function settings

Setting

OCK050304N

Lane Safety

With the ENGINE START/STOP button in the ON position, select 'Driver Assistance → Lane Safety' from the setting menu to set whether or not to use each function.

- If 'Assist' is selected, the function will automatically assist the driver's steering when lane departure is detected to help prevent the vehicle from moving out of its lane.
- If 'Warning Only' is selected, the function will warn the driver with an audible warning when lane departure is detected. The driver must steer the vehicle.
- If 'Off' is selected, the function will turn off. The indicator light ( ) will turn off on the cluster.

⚠ WARNING

- If 'Warning Only' is selected, steering is not assisted.
- Lane Keeping Assist does not control the steering wheel when the vehicle is driven in the middle of the lane.
- The driver should always be aware of the surroundings and steer the vehicle if 'Off' is selected.

Turning the function ON/OFF

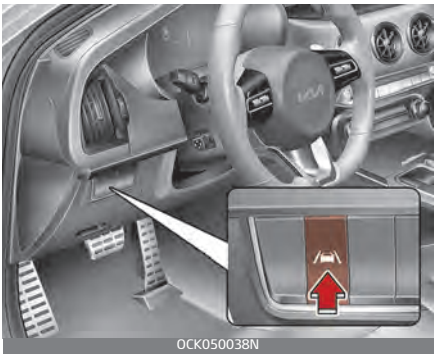
OCK050038N

With the ENGINE START/STOP button in the ON position, press and hold the Lane Safety button located on the instrument panel to turn on Lane Keeping Assist. The white indicator light ( ) will illuminate on the cluster. Press and hold the button again to turn off the function.

NOTICE

- If the engine is restarted, Lane Keeping Assist will maintain the last setting.
- When Lane Keeping Assist is turned off with the Lane Safety button, Lane Safety system settings will turn off.

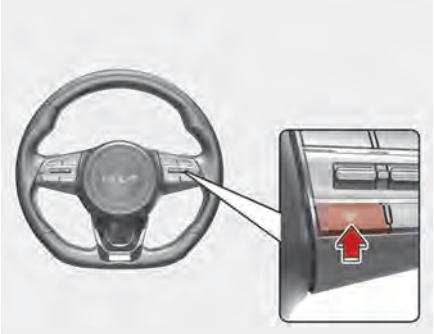
OCK050274N

To activate/deactivate LKA, with the ENGINE START/STOP button in the ON position, press and hold the Lane Driving Assist button ( ) located on the steering wheel to turn off Lane Keeping Assist. Press and hold the button again to turn on the function.

The indicator ( ) in the cluster display will initially illuminate white. If you pressing and holding the Lane Driving Assist button located on the steering wheel, LKA will be turned off and the indicator on the cluster display will go off.

NOTICE

When Lane Keeping Assist is turned off with the Lane Driving Assist button, Lane Safety settings will turn off.

Warning Volume

OCK050303L

With the ENGINE START/STOP button in the ON position, select 'Driver Assistance → Warning Volume' from the "User Settings (LCD display) or Setup → Vehicle (Infotainment System screen)" to change the Warning Volume to 'High', 'Medium', 'Low' for Lane Keeping Assist.

If you change the Warning Volume, the Warning Volume of other Driver Assistance systems may be changed.

✻ NOTICE

If your vehicle is equipped with additional Infotainment System, please scan the QR code in a separately supplied Car Infotainment System Quick Reference Guide.

Function operation

Warning and control

Lane Keeping Assist will warn and control the vehicle with Lane Departure Warning and Lane Keeping Assist.

Lane Departure Warning

Left

OCK050226

Right

OCK050227

- To warn the driver that the vehicle is departing from the projected lane in front, the green ( ) indicator light will blink

on the cluster, the lane line will blink on the cluster depending on which direction the vehicle is veering, and an audible warning will sound.
- The function will operate when your vehicle speed is between approximately 40~120 mph (60~200 km/h).

Lane Keeping Assist

- To warn the driver that the vehicle is departing from the projected lane in front, the green ( )indicator light will blink on the cluster, and the steering wheel will make adjustments to keep vehicle inside the lane.
- The function will operate when your vehicle speed is between approximately 40~120 mph (60~200 km/h).

Hands-off warning

If the driver takes their hands off the steering wheel for several seconds, the 'Keep hands on steering wheel' warning message will appear on the cluster, and an audible warning will sound in stages.

WARNING

- The steering wheel may not be assisted if the steering wheel is held very tight or the steering wheel is steered over a certain degree.
- Lane Keeping Assist does not operate at all times. It is the responsibility of the driver to safely steer the vehicle and to maintain the vehicle in its lane.
- The hands–off warning message may appear late depending on road conditions. Always have your hands on the steering wheel while driving.
- If the steering wheel is held very lightly, the hands off warning message may appear because the function may not recognize that the driver has their hands on the steering wheel.
- If you attach objects to the steering wheel, the hands-off warning may not work properly.

NOTICE

- For more details on setting the functions in the infotainment function, refer to "LCD display modes" on page 4-75.

- When lane markings (or road edges) are detected, the lane lines on the cluster will change from gray to white and the green ( ) indicator light will illuminate if LKA is operable.

Lane undetected

OCK050229

Lane detected

OCK050230

- Even though the steering is assisted by Lane Keeping Assist, the driver may control the steering wheel.
- The steering wheel may feel heavier or lighter when the steering wheel is assisted by Lane Keeping Assist than when it is not.

Function malfunction and limitations

Function malfunction

OCK050231L

When Lane Keeping Assist is not working properly, the 'Check Lane Keeping Assist (LKA) system', warning message will appear and the yellow ( ) indicator light will illuminate on the cluster. In this case, have the function checked by an authorized Kia dealer.

Limitations of the function

Lane Keeping Assist may not operate normally or may operate unexpectedly under the following circumstances:

- The lane is contaminated or difficult to distinguish because,
  - The lane markings (or road edge) is covered with rain, snow, dirt, oil, etc.

- The color of the lane marking (or road edge) is not distinguishable from the road
- There are markings (or road edges) on the road near the lane or the markings (or road edges) on the road looks similar to the lane markings (or road edge)
- The lane marking (or road edge) is indistinct or damaged
- The shadow is on the lane marking (or road edge) by a median strip, trees, guardrail, noise barriers, etc.

- There are more than two lane markings (or road edges) on the road
- The lane number increases or decreases, or the lane markings (or road edges) are crossing
- The lane markings (or road edges) are complicated or a structure substitutes for the lines, such as a construction area
- There are road markings, such as zigzag lanes, crosswalk markings and road signs
- The lane suddenly disappears, such as at the intersection
- The lane (or road width) is very wide or narrow
- There is a road edge without a lane
- There is a boundary structure in the roadway, such as a tollgate, sidewalk, curb, etc.
- The distance to the front vehicle is extremely short or the vehicle in front is covering the lane marking (or road edge)

⚠ CAUTION

For more details on the limitations of the front view camera, refer to "Forward Collision-Avoidance Assist (FCA) (Sensor fusion)" on page 5-65.

⚠ WARNING

Take the following precautions when using Lane Keeping Assist:

- The driver should hold the responsibility to safely drive and control the vehicle. Do not solely rely on the function and drive dangerously.
- The operation of Lane Keeping Assist can be cancelled or not work properly depending on road conditions and surroundings. Always be cautious while driving.
- Refer to "Limitations of the function" on page 5-87, if the lane is not detected properly.
- When you are towing a trailer or another vehicle, we recommend that Lane Keeping Assist is turned off due to safety reasons.
- If the vehicle is driven at high speed, the steering wheel will not be controlled. The driver must always follow the speed limit when using the function.

- If any other function's warning message is displayed or audible warning is generated, Lane Keeping Assist warning message may not be displayed and audible warning may not be generated.
- You may not hear the warning sound of Lane Keeping Assist if the surrounding is noisy.
- If you attach objects to the steering wheel, steering may not be assisted properly.
- Lane Keeping Assist may not operate for 15 seconds after the vehicle is started, or the front view camera is initialized.
- Lane Keeping Assist will not operate when:
  - The turn signal or hazard warning flasher is turned on
  - The vehicle is not driven in the center of the lane when the function is turned on or right after changing a lane
  - ESC (Electronic Stability Control) or VSM (Vehicle Stability Management) is activated
  - The vehicle is driven on a sharp curve
  - Vehicle speed is below 35 mph (55 km/h) or above 130 mph (210 km/h)
  - The vehicle makes sharp lane changes
  - The vehicle is suddenly stopped

Blind-Spot Collision-Avoidance Assist (BCA) (if equipped)

Blind-Spot Collision-Avoidance Assist is designed to help detect and monitor approaching vehicles in the driver's blind spot area and warn the driver of a possible collision with a warning message and audible warning.

In addition, if there is a risk of collision when changing lanes or driving forward out of a parking space, the function will help avoid collision by applying the differential braking.

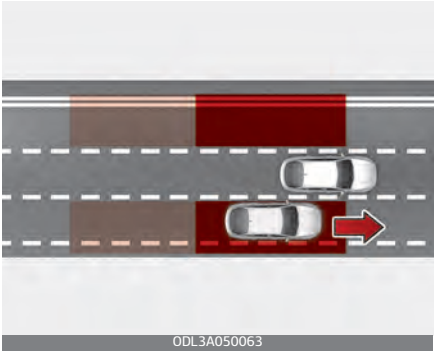

Blind-Spot Collision-Avoidance Assist help detects and informs the driver that a vehicle is in the blind spot.

⚠ CAUTION

The detecting range may vary depending on the speed of your vehicle. However, even if there is a vehicle in the blind spot, the function

may not warn you when you pass by at high speeds.

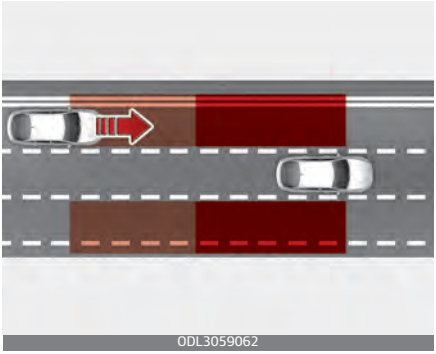

Blind-Spot Collision-Avoidance Assist help detects and informs the driver that a vehicle is approaching at high speed from the blind spot area.

⚠ CAUTION

Warning timing may vary depending on the speed of the vehicle approaching at high speed.

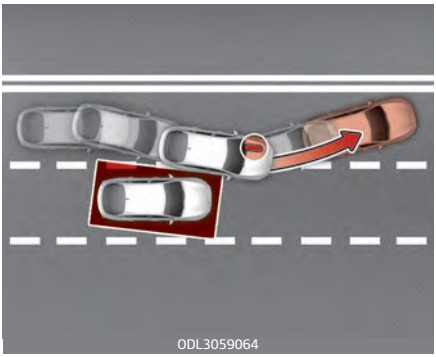

When you are driving forward out of a parking space, if the function judges that there is a collision risk with an approaching vehicle in the blind spot, the function will help avoid collision by applying the brake.

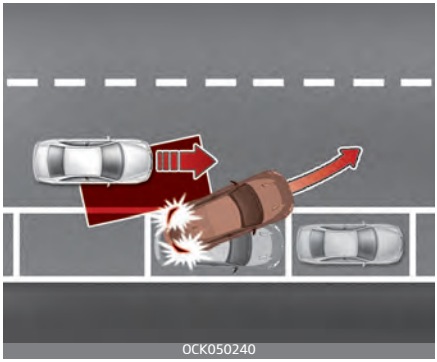

When changing lanes by detecting the lane ahead, if the function judges that there is a collision risk with an approaching vehicle in the blind spot, the function will help avoid collision by applying the differential brake.

✻ NOTICE

- BCA stands for Blind-Spot Collision-Avoidance Assist.
- In the following text, Blind-Spot Collision-Avoidance Assist will be referred as Blind-Spot Safety system.

Detecting sensor

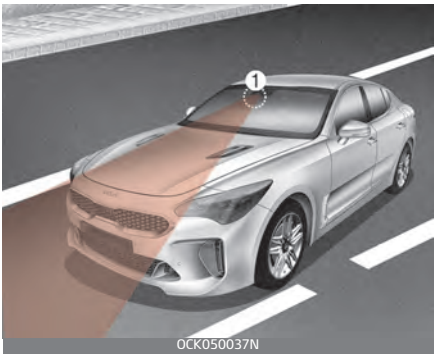

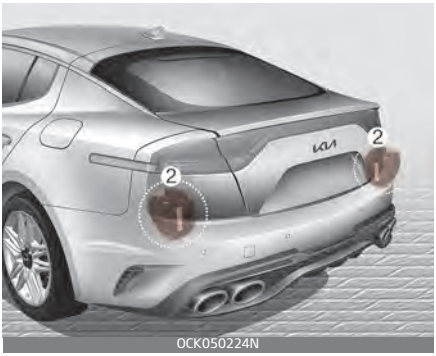

[1] : Front view camera, [2] : Rear corner radar

Refer to the picture above for the detailed location of the detecting sensors.

⚠ CAUTION

Take the following precautions to maintain optimal performance of the detecting sensor:

- Never disassemble the rear corner radar or radar assembly, or apply any impact on it.
- If there is impact on the rear corner radar or near the radar, even though the warning message does not appear on the cluster, Blind-Spot Safety system may not operate properly. In this case, have your vehicle inspected by an authorized Kia dealer.
- If the rear corner radars have been replaced or repaired, have your vehicle inspected by an authorized Kia dealer.
- Use only genuine parts to repair the rear bumper where the rear corner radar is located.
- Do not apply license plate frame or objects, such as a bumper sticker, film or a bumper guard near the rear corner radar.
- The function may not work properly if the bumper has been replaced, or the surroundings of the rear corner radar has been damaged or paint has been applied.
- If a trailer, carrier, etc. is installed, it may adversely affect the performance of the rear corner radar or the function may not operate. For more details on the precautions of the front view camera, refer to "Forward Collision-Avoidance Assist (FCA) (Sensor fusion)" on page 5-65.

Function settings

Setting

OCK050315N

Blind-Spot Safety

With the ENGINE START/STOP button in the ON position, select 'Driver Assistance → Blind-Spot Safety' from the setting menu to set whether or not to use each function.

- If 'Active Assist' is selected, the function will warn the driver with a warning message, an audible warning and braking assist will be applied depending on the collision risk levels.
- If 'Warning Only' is selected, the function will warn the driver with a warning message, an audible warning depending on the collision risk levels. Braking will not be assisted.

OCK050232L

When the engine is restarted with the function off, the 'Blind-Spot Safety System is Off' message will appear on the cluster.

If you change the setting from 'Off' to 'Active Assist' or 'Warning Only', the warning light on the side view mirror (outside mirror) will blink for approximately 3 seconds.

In addition, if the engine is turned on, when the function is set to 'Active Assist' or 'Warning Only', the warning light on the side view mirror (outside mirror) will blink for approximately 3 seconds.

⚠ WARNING

- If 'Warning Only' is selected, braking is not assisted.
- If 'Off' is selected, the driver should always be aware of the surroundings and drive safely.

NOTICE

If the engine is restarted, Blind-Spot Safety system will maintain the last setting.

Warning Timing

OCK050305L

With the ENGINE START/STOP button in the ON position, select 'Driver Assistance → Warning Timing' from the "User Settings (LCD display) or Setup → Vehicle (Infotainment System screen)" to change the initial warning activation time for Blind-Spot Safety system.

When the vehicle is first delivered, Warning Timing is set to 'Normal'. If you change the Warning Timing, the warning time of other Driver Assistance systems may change.

Warning Volume

OCK050303L

With the ENGINE START/STOP button in the ON position, select 'Driver Assistance → Warning Volume' from the "User Settings (LCD display) or Setup → Vehicle (Infotainment System screen)" to change the Warning Volume to 'High', 'Medium', 'Low' for Blind-Spot Safety system.

If you change the Warning Volume, the warning volume of other Driver Assistance systems may change.

CAUTION

- The setting of the Warning Timing and Warning Volume applies to all functions of the Blind-Spot Safety system.
- Even though 'Normal' is selected for Warning Timing, if the vehicles approaches at high speed, the initial warning activation time may seem late.

- Select 'Late' for Warning Timing when traffic is light and when driving speed is slow.

NOTICE

If your vehicle is equipped with additional Infotainment System, please scan the QR code in a separately supplied Car Infotainment System Quick Reference Guide.

Function operation

Function warning and control

Vehicle detection

- To warn the driver a vehicle is detected, the warning light on the side view mirror (outside mirror) and Head-up display (if equipped) will illuminate.
- The function will operate when your vehicle speed is above 12 mph (20 km/h) and the speed of the vehicle in the blind spot area is above 7 mph (10 km/h).

Collision warning

- Collision warning will operate when the turn signal is turned on in the direction of the detected vehicle.
- If 'Warning Only' is selected from the "User Settings (LCD display) or Setup → Vehicle (Infotainment System screen)", the collision warning will operate when your vehicle approaches the lane the blind spot vehicle is detected.
- To warn the driver of a collision, the warning light on the side view mirror (outside mirror) and Head-up display (if equipped) will blink.
- When the turn signal is turned off or you move away from the lane, the collision warning will be canceled and the function will return to vehicle detection state.

WARNING

- The detecting range of the rear corner radar is determined by a standard road width, therefore, on a narrow road, the function may detect other vehicles in the second lane from your vehicle and warn you.
- In contrast, on a wide road, the function may not be able to detect a vehicle driving in the next lane and may not warn you.

- When the hazard warning light is on, the collision warning by the turn signal will not operate.

Collision-Avoidance Assist (while driving)

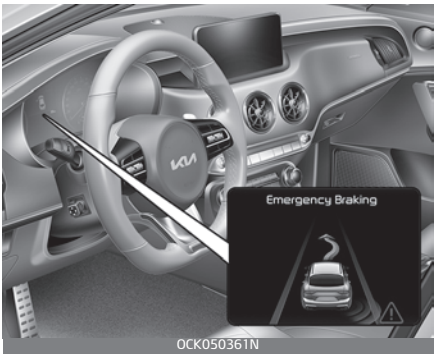

OCK050361N

- To warn the driver of a collision, the warning light on the side view mirror (outside mirror) will blink and a warning message will appear on the cluster. At the same time, an audible warning will sound, warning light on the head-up display (if equipped) will blink.
- The function will operate when your vehicle speed is between 40~120 mph (60~200 km/h) and both lane markings of the driving lane are detected.
- Emergency braking will be assisted to help prevent collision with the vehicle in the blind spot area.

⚠ WARNING

- Collision-Avoidance Assist will be canceled under the following circumstances:
  - Your vehicle enters the next lane by a certain distance
  - Your vehicle is away from the collision risk
  - The steering wheel is sharply steered
  - The brake pedal is depressed
  - Forward Collision-Avoidance Assist is operating
- After function operation or changing lane, you must drive to the center of the lane. The function will not operate if the vehicle is not driven in the center of the lane.

Collision-Avoidance Assist (while departing)

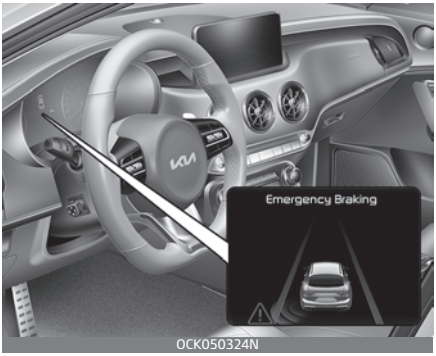

OCK050324N

- To warn the driver of a collision, the warning light on the side view mirror (outside mirror) will blink and a warning message will

appear on the cluster. At the same time, an audible warning will sound, warning light on the head-up display (if equipped) will blink.
- The function will operate when your vehicle speed is below 2 mph (3 km/h) and the speed of the vehicle in the blind spot area is above 3 mph (5 km/h).
- Emergency braking will be assisted to help prevent collision with the vehicle in the blind spot area.

Stopping vehicle and ending brake control

OCK050218L

- When the vehicle is stopped due to emergency braking, the 'Drive carefully' warning message will appear on the cluster.
- For your safety, the driver should depress the brake pedal immediately and check the surroundings.
- Brake control will end after the vehicle is stopped by emergency braking for approximately 2 seconds.

WARNING

- For your safety, change the Settings after parking the vehicle at a safe location.
- If any other function's warning message is displayed or audible warning is generated, Blind-Spot Safety system's warning message may not be displayed and audible warning may not be generated.
- You may not hear the warning sound of Blind-Spot Safety system if the surrounding is noisy.
- Blind-Spot Safety system may not operate if the driver applies the brake pedal to avoid collision.
- When Blind-Spot Safety system is operating, braking control by the function will automatically cancel when the driver excessively depresses the accelerator pedal or sharply steers the vehicle.
- If changing the gear quickly during reversing the vehicle, Blind-Spot Safety system may not work or may operate unnecessarily.
- During Blind-Spot Safety system operation, the vehicle may stop suddenly injuring passengers and shifting loose objects. Always have the seat belt on and keep loose objects secured.
- Even if there is a problem with Blind-Spot Safety system, the vehicle's basic braking performance will operate normally.

- Blind-Spot Safety system does not operate in all situations or cannot avoid all collisions.
- Blind-Spot Safety system may warn the driver late or may not warn the driver depending on the road and driving conditions.
- Driver should maintain control of the vehicle at all times. Do not depend on Blind-Spot Safety system. Maintain a safe braking distance, and if necessary, depress the brake pedal to reduce driving speed or to stop the vehicle.
- Never operate Blind-Spot Safety system on people, animal, objects, etc. It may cause serious injury or death.

⚠ WARNING

The brake control may not operate properly depending on the status of ESC (Electronic Stability Control).

There will only be a warning when:

- The ESC (Electronic Stability Control) warning light is on.
- ESC (Electronic Stability Control) is engaged in a different function.

Function malfunction and limitations

Function malfunction

OCK050316L

When Blind-Spot Safety system is not working properly, the 'Check Blind-Spot Safety system' warning message will appear (turns off after a certain time), and (⚠) warning light will illuminate on the cluster. In this case, have your vehicle inspected by an authorized Kia dealer.

OCK050317L

When the side view mirror (outside mirror) warning light is not working

properly, the 'Check side view mirror warning light' warning message will appear (turns off after a certain time), and (⚠) warning light will illuminate on the cluster. In this case, have your vehicle inspected by an authorized Kia dealer.

Function disabled

When the rear bumper around the rear corner radar or sensor is covered with foreign material, such as snow or rain, or installing a trailer or carrier, it can reduce the detecting performance and temporarily limit or disable Blind-Spot Safety system.

If this occurs, the 'Blind-Spot Safety system disabled. Radar blocked' warning message will appear on the cluster.

The function will operate normally when such foreign material or trailer, etc. is removed, and then the engine is restarted.

If the function does not operate normally after it is removed, have your vehicle inspected by an authorized Kia dealer.

⚠ WARNING

- Even though the warning message does not appear on the cluster, Blind-Spot Safety system may not properly operate.
- Blind-Spot Safety system may not properly operate in an area (e.g. open terrain), where any substance are not detected right after the engine is turned on, or when the detecting sensor is blocked with foreign material right after the engine is turned on.

⚠ CAUTION

Turn off Blind-Spot Safety system to install a trailer, carrier, etc., or remove the trailer, carrier, etc. to use Blind-Spot Safety system.

Limitations of the function

Blind-Spot Safety system may not operate normally, or the function may operate unexpectedly under the following circumstances:

- There is inclement weather, such as heavy snow, heavy rain, etc.
- The rear corner radar is covered with snow, rain, dirt, etc.

- The temperature around the rear corner radar is high or low
- Driving on a highway (or motorway) ramp
- The road pavement (or the peripheral ground) abnormally contains metallic components (i.e. possibly due to subway construction).
- There is a fixed object near the vehicle, such as sound barriers, guardrails, central dividers, entry barriers, street lamps, signs, tunnels, walls, etc. (including double structures)
- Driving in large areas where there are few vehicles or structures (i.e. desert, meadow, suburb, etc.)
- Driving through a narrow road where trees or grass are overgrown
- Driving on a wet road surface, such as a puddle on the road
- The other vehicle drives very close behind your vehicle, or the other vehicle passes by your vehicle in close proximity
- The speed of the other vehicle is very fast that it passes by your vehicle in a short time
- Your vehicle passes by the other vehicle
- Your vehicle change lane
- Your vehicle has started at the same time as the vehicle next to you and has accelerated
- The vehicle in the next lane moves two lanes away from you, or when the vehicle two lanes away moves to the next lane from you
- A trailer or carrier is installed around the rear corner radar
- The bumper around the rear corner radar is covered with objects, such as a bumper sticker, bumper guard, bike rack, etc.
- The bumper around the rear corner radar is impacted, damaged or the radar is out of position
- Your vehicle height is low or high due to heavy loads, abnormal tire pressure, etc.

Blind-Spot Safety system may not operate normally, or the function may operate unexpectedly when the following objects are detected:

- A motorcycle or bicycle is detected
- A vehicle such as a flat trailer is detected
- A big vehicle such as a bus or truck is detected
- A moving obstacle such as a pedestrian, animal, shopping cart or a baby stroller is detected
- A vehicle with low height such as a sports car is detected

Braking control may not work, driver's attention is required in the following circumstances:

- The vehicle severely vibrates when driving on a bumpy, uneven or concrete road
- Driving on a slippery surface due to snow, water puddle, ice, etc.

- The tire pressure is low or a tire is damaged
- The brake is reworked
- The vehicle makes abrupt lane changes

⚠ CAUTION

For more details on the limitations of the front view camera, refer to "Forward Collision-Avoidance Assist (FCA) (Sensor fusion)" on page 5-65.

⚠ WARNING

Driving on a curve

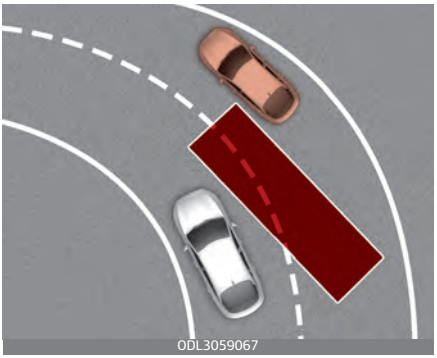

Blind-Spot Safety system may not operate properly when driving on a curved road. The function may not detect the vehicle in the next lane.

Always pay attention to road and driving conditions while driving.

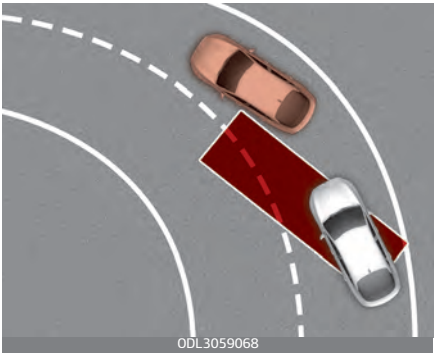

Blind-Spot Safety system may not operate properly when driving on the curved road. The function may recognize the vehicle in the same lane.

Always pay attention to road and driving conditions while driving.

Driving where the road is merging/ dividing

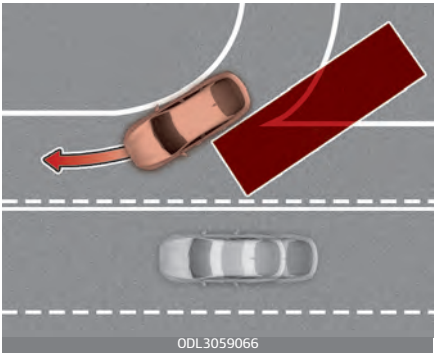

Blind-Spot Safety system may not operate properly when driving where the road merges or divides. The function may not detect the vehicle in the next lane.

Always pay attention to road and driving conditions while driving.

Driving on a slope

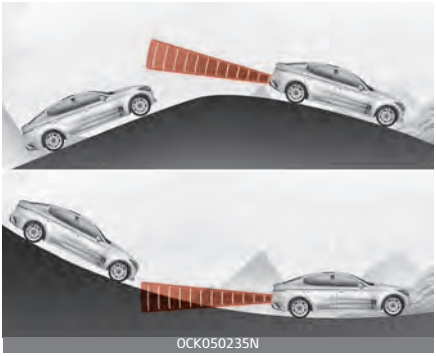

Blind-Spot Safety system may not operate properly when driving on a slope. The function may not detect the vehicle in the next lane or may incorrectly detect the ground or structure.

Always pay attention to road and driving conditions while driving.

Driving where the heights of the lanes are different

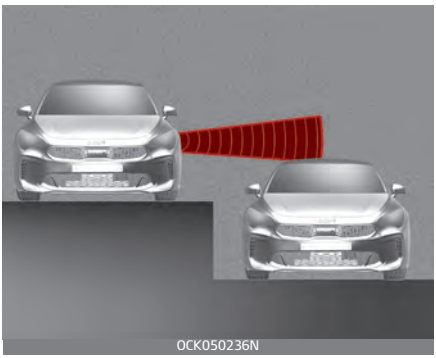

Blind-Spot Safety system may not operate properly when driving where the heights of the lanes are different. The function may not detect the vehicle on a road with different lane heights (underpass joining section, grade separated intersections, etc.).

Always pay attention to road and driving conditions while driving.

⚠ WARNING

- When you are towing a trailer or another vehicle, make sure that you turn off Blind-Spot Safety system.
- Blind-Spot Safety system may not operate normally if interfered by strong electromagnetic waves.
- Blind-Spot Safety system may not operate for 15 seconds after the vehicle is started, or the rear corner radars are initialized.

This device complies with Part 15 of the FCC rules.

Operation is subject to the following two conditions:

1. This device may not cause harmful interference, and
2. This device must accept any interference received, including interference that may cause undesired operation.

CAUTION TO USERS

Changes or modifications not expressly approved by the party responsible for compliance could void the user's authority to operate the equipment.

Driver Attention Warning (DAW)

Basic function

Driver Attention Warning will determine the driver's attention level by analyzing driving pattern, driving time, etc. while driving. The function will recommend a break when the driver's attention level falls below a certain level to help drive safely.

Leading Vehicle Departure Alert

Leading Vehicle Departure Alert will inform the driver when the front vehicle departs from a stop.

NOTICE

DAW stands for Driver Attention Warning.

Detecting sensor

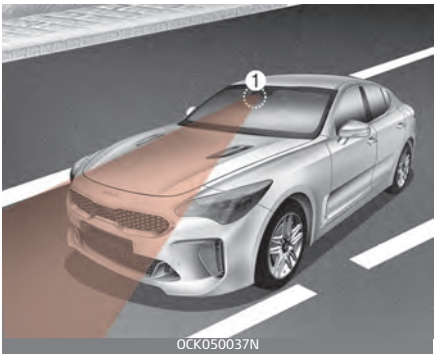

[1]: Front view camera

The front view camera is used as a detecting sensor to detect driving patterns and front vehicle departure while vehicle is being driven.

Refer to the picture above for the detailed location of the detecting sensor.

CAUTION

Always keep the front view camera in good condition to maintain optimal performance of Driver Attention Warning.

For more details on the precautions of the front view camera, refer to "Forward Collision-Avoidance Assist (FCA) (Sensor fusion)" on page 5-65.

Function settings

Setting

Driver Attention Warning

OCK050313L

- Driver Attention Warning is set to be in the OFF position, when your vehicle is first delivered to you from the factory.
  To turn ON Driver Attention Warning, turn on the engine, and then select “User Settings (LCD display) or Setup → Vehicle (Infotainment System screen) → Driver Assistance → Driver Attention Warning” on the LCD display.
- If 'Inattentive Driving Warning' is selected, the function will inform the driver the driver's attention level and will recommend taking a break when the level falls below a certain level.

Leading Vehicle Departure Alert

OCK050314L

If 'Leading Vehicle Departure Alert' is selected, the function will inform the driver when the front vehicle departs from a stop.

Warning Timing

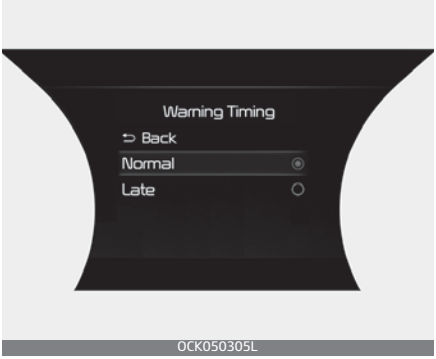

OCK050305L

The driver can select the initial warning activation time in the User Settings in the LCD display by selecting “User Settings (LCD display) or Setup → Vehicle (Infotainment System screen) → Driver Assistance → Warning Timing”.
When the vehicle is first delivered, warning timing is set to 'Normal'. If

you change the warning timing, the warning time of other Driver Assistance systems may change.

Make sure to check the warning timing before changing it.

NOTICE

If the engine is restarted, Driver Attention Warning will maintain the last setting.

NOTICE

If your vehicle is equipped with additional Infotainment System, please scan the QR code in a separately supplied Car Infotainment System Quick Reference Guide.

Function operation

Basic function

Function display and warning

The basic function of Driver Attention Warning is to inform the driver the 'Attention Level' and to warn the driver 'Consider taking a break'.

Attention level

Off

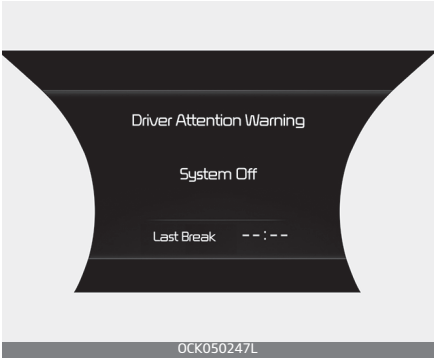

Standby

Attentive driving

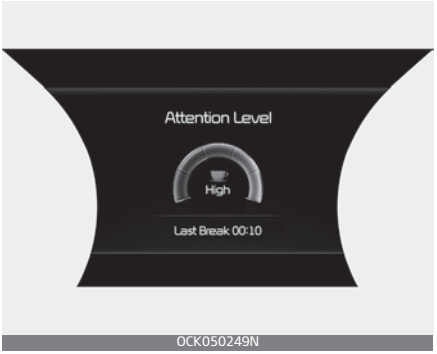

Inattentive driving

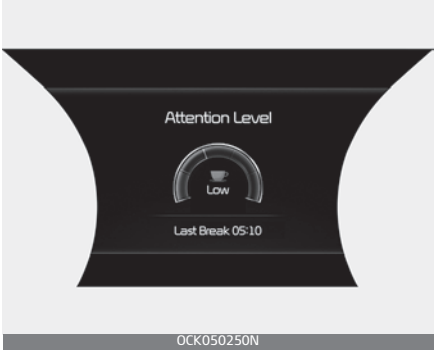

OCK050250N

- The driver can monitor his/her driving conditions on the cluster.
  - When the 'Inattentive Driving Warning' is deselected from the "User Settings (LCD display) or Setup → Vehicle (Infotainment System screen), 'System Off' is displayed.
  - The function will operate when vehicle speed is between 0~130 mph (0~210 km/h).
  - When vehicle speed is not within the operating speed, the message 'Standby' will be displayed.
- The driver's attention level is displayed on the scale of 1 to 5. The lower the level is, the more inattentive the driver is.
- The level decreases when the driver does not take a break for a certain period of time.

Taking a break

OCK050251L

- The 'Consider taking a break' message will appear on the cluster and an audible warning will sound to suggest that the driver take a break, when the driver's attention level is below 1.
- Driver Attention Warning will not suggest a break when the total driving time is shorter than 10 minutes or 10 minutes has not passed after the last break was suggested.

⚠ WARNING

For your safety, change the Settings after parking the vehicle at a safe location.

⚠ CAUTION

- Driver Attention Warning may suggest a break depending on the driver's driving pattern or habits, even if the driver doesn't feel fatigue.
- Driver Attention Warning is a supplemental function and may not be able to determine whether the driver is inattentive.
- The driver who feels fatigued should take a break at a safe location, even though there is no break suggestion by Driver Attention Warning.

✻ NOTICE

- For more details on setting the functions in the infotainment system, refer to "Instrument cluster" on page 4-68.
- Driver Attention Warning will reset the last break time to 00:00 in the following situations:
  - The engine is turned off
  - The driver unfastens the seat belt and opens the driver's door.
  - The vehicle is stopped for more than 10 minutes.
- When the driver resets Driver Attention Warning, the last break time is set to 00:00 and the driver's attention level is set to High.

Leading Vehicle Departure Alert

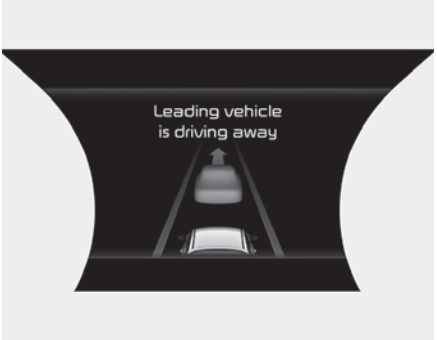

OCK050252L

When the front vehicle departs from a stop, Leading Vehicle Departure Alert will inform the driver by displaying the 'Leading vehicle is driving away' message on the cluster and an audible warning will sound.

⚠ WARNING

- If any other function's warning message is displayed or audible warning is generated, Leading Vehicle Departure Alert Warning message may not be displayed and audible warning may not be generated.
- The driver should hold the responsibility to safely drive and control the vehicle.

⚠ CAUTION

- Leading Vehicle Departure Warning is a supplemental function and may not warn the driver when-

ever the front vehicle departs from a stop.
- Always check the front of the vehicle and road conditions before departure.

Function malfunction and limitations

Function malfunction

OCK050253L

When Driver Attention Warning is not working properly, the 'Check Driver Attention Warning (DAW) system' warning message will appear on the cluster (turns off after a certain time) and (⚠) warning light will illuminate. In this case, have your vehicle inspected by an authorized Kia dealer.

Limitations of the function

Driver Attention Warning may not work properly in the following situations:
- The vehicle is driven violently
- The vehicle intentionally crosses over lanes frequently
- The vehicle is controlled by Driver Assistance system, such as Lane Keeping Assist.

Leading Vehicle Departure Alert

- When the vehicle cuts in

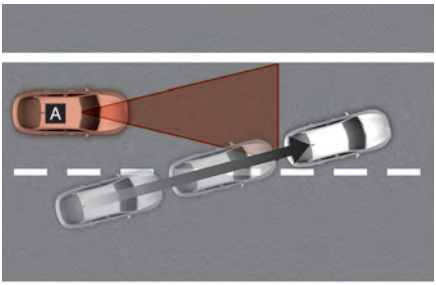

ODL3059047

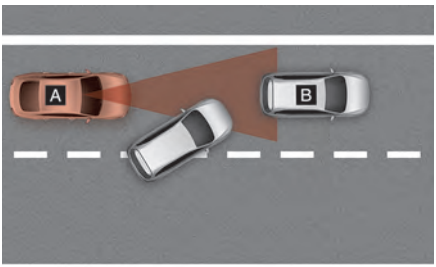

OCK050295

[A]: Your vehicle, [B]: Front vehicle

If a vehicle cuts in front of your vehicle, Leading Vehicle Departure Alert may not operate properly.
- When the vehicle ahead sharply steers

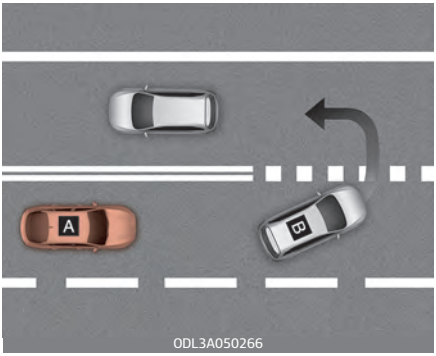

[A] : Your vehicle, [B] : Front vehicle

If the vehicle in front makes a sharp turn, such as to turn left or right or make a U- turn, etc., Leading Vehicle Departure Alert may not operate properly.

- When the vehicle ahead abruptly departures

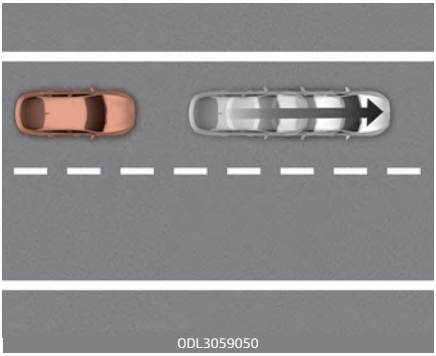

If the vehicle in front abruptly departures, Leading Vehicle Departure Alert may not operate properly.

- When a pedestrian or cyclist is between you and the vehicle ahead

If there is a pedestrian or cyclist in between you and the vehicle in front, Leading Vehicle Departure Alert may not operate properly.

- When in a parking lot

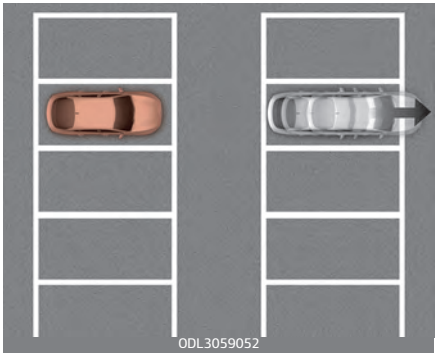

If a vehicle parked in front drives away from you, Leading Vehicle Departure Alert may warn you that the parked vehicle is driving away.

- When driving at a tollgate or intersection, etc.

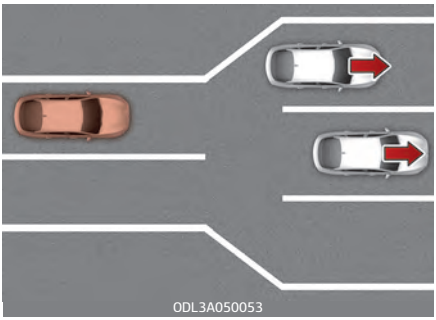
ODL3A050053

If you pass a tollgate or intersection with lots of vehicles or you drive where lanes are merged or divided frequently, Leading Vehicle Departure Alert may not operate properly.

⚠ CAUTION

For more details on the precautions of the front view camera, refer to "Forward Collision-Avoidance Assist (FCA) (Sensor fusion)" on page 5-65.

Blind-Spot View Monitor (BVM) (if equipped)

Left side

OCK040509N

Right side

OCK040508N

Blind-Spot View Monitor displays the rear blind spot area of the vehicle in the cluster when the turn signal is turned on to help safely change lanes.

⚠ WARNING

Vehicles may look closer than they actually are. Failure to visually confirm that it is safe to change lanes before doing so may result in an accident leading to serious injury.

* If your vehicle is equipped with an infotainment system, you can learn how to setup on the website via QR code in the infotainment quick reference guide.

Detecting sensor

OCK040555N

[1], [2]: SVM-left side/SVM-right side camera

(camera located at bottom of the mirror)

Refer to the picture above for the detailed location of the detecting sensors.

Function settings

Blind-Spot View

- With the ENGINE START/STOP button in the ON position, select 'Driver Assistance → Blind-Spot Safety → Blind-Spot View' from the Settings menu to turn on Blind-Spot View Monitor and deselect to turn off the function.

Function operation

Controller

Turn signal switch

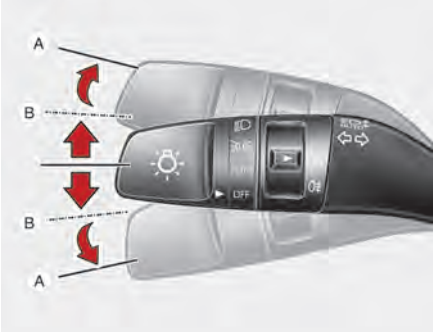

OCK040516

- Blind-Spot View Monitor displays the left or right side of the rear blind spot area of your vehicle in the instrument cluster when the left or right turn signal is on.

Blind-Spot View Monitor

Operating conditions

- The function is activated when the following steps are performed.
  - Turn signal is ON

Off conditions

- Turn signal is OFF
- Hazard warning flasher is ON
- Other warnings pops up and takes priority over Blind-Spot View Monitor

Function malfunction and limitations

Function malfunction

- When Blind-Spot View Monitor is not working properly, or the cluster display flickers, or the camera image does not display normally, have your vehicle inspected by an authorized Kia dealer.

⚠ WARNING

- A wide-angle lens is used for Blind-Spot View Monitor. There may be a difference between actual object distance and visual object distance due to correction of the image distortion. Pay attention to the road conditions and surroundings at all times.
- The camera may not work normally if the lens is covered with foreign material. Always keep the camera lens clean.

Smart Cruise Control (SCC)

Smart Cruise Control allows you to program the vehicle to maintain constant speed and distance detecting the vehicle ahead without depressing the accelerator or brake pedal.

Overtaking Acceleration Assist

While Smart Cruise Control is operating, if the function judges that the driver is determined to overtake the vehicle in front, acceleration will be assisted.

Detecting sensor

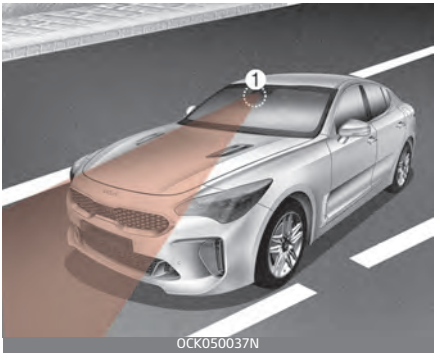

[1]: Front view camera, [2]: Front radar

The front view camera and front radar are used as a detecting sensor to detect front vehicles.

Refer to the picture above for the detailed location of the detecting sensor.

⚠ CAUTION

Always keep the front view camera and front radar in good condition to maintain optimal performance of Smart Cruise Control.

For more details on the precautions of the front view camera and front radar, refer to "Forward Collision-Avoidance Assist (FCA) (Sensor fusion)" on page 5-65.

Function settings

Setting

To turn on the function

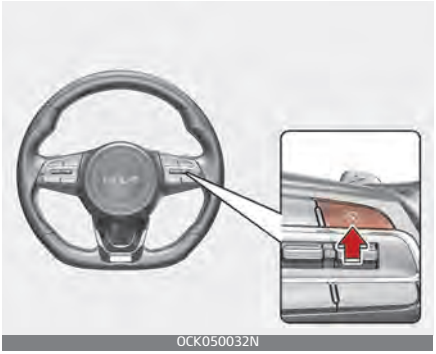

- Press the Driving Assist button to turn on the function. The

speed will be set to the current speed on the cluster.

- If there is no vehicle in front of you, the set speed will be maintained, but if there is a vehicle in front of you, the speed may decrease to maintain the distance to the vehicle ahead. If the vehicle ahead accelerates, your vehicle will travel at a steady cruising speed after accelerating to the set speed.

NOTICE

- If your vehicle speed is between 0~20 mph (0~30 km/h) when you press the Driving Assist button, the Smart Cruise Control speed will be set to 20 mph (30 km/h).
- The symbol of the Driving Assist button can be applied indifferent such as MODE or depending on the vehicle.

To set Vehicle Distance

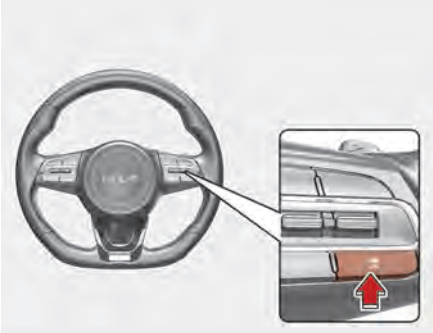

OCK050031N

Each time the Vehicle Distance button is pressed, the Vehicle Distance changes as follows:

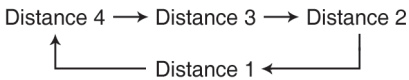

NOTICE

- If you drive at 56 mph (90 km/h), the distance is maintained as follows:
  - Distance 4 – approximately 172 ft. (52.5 m)
  - Distance 3 – approximately 130 ft. (40 m)
  - Distance 2 – approximately 106 ft. (32.5 m)
  - Distance 1 – approximately 82 ft. (25 m)
- The distance is set to the last set distance when the engine is restarted, or when the function was temporarily canceled.

To increase speed

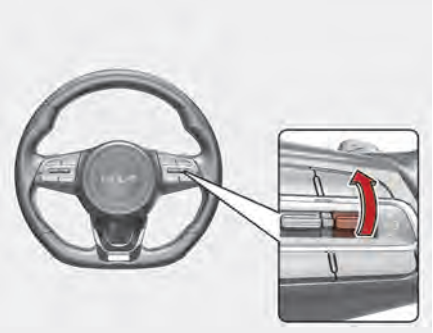

OCK050030N

- Push up the + switch, and release it immediately. The cruising speed will increase by 1 mph (1 km/h) each time the switch is operated in this manner.
- Push up the + switch, and hold it while monitoring the set speed on the cluster. The cruising speed will increase by 5 mph or 10 km/h each time the switch is operated in this manner. Release the switch when the desired speed is shown, and the vehicle will accelerate to that speed. You can set the speed to 120 mph (200 km/h).

⚠ WARNING

Check the driving condition before using the + switch. Driving speed may sharply increase when you push up and hold the + switch.

To decrease speed

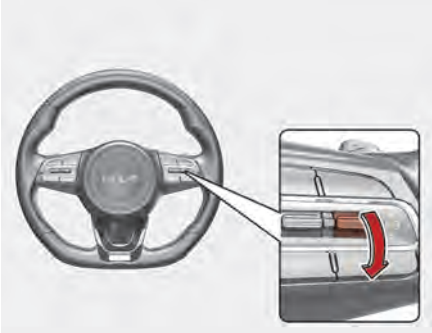

OCK050029N

- Push down the – switch, and release it immediately. The cruising speed will decrease by 1 mph (1 km/h) each time the switch is operated in this manner.
- Push down the – switch, and hold it while monitoring the set speed on the cluster. The cruising speed will decrease by 5 mph or 10 km/h each time the switch is operated in this manner.
- Release the switch at the speed you want to maintain. You can set the speed to 20 mph (30 km/h).

To temporarily cancel the function

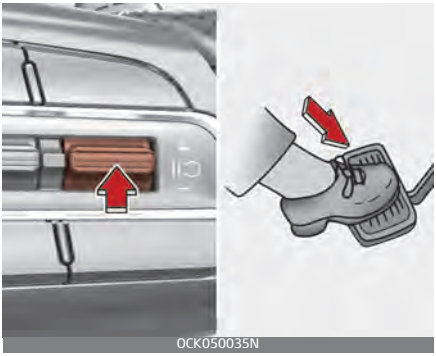
OCK050035N

Press the || ⟲ switch or depress the brake pedal to temporarily cancel Smart Cruise Control.

To resume the function

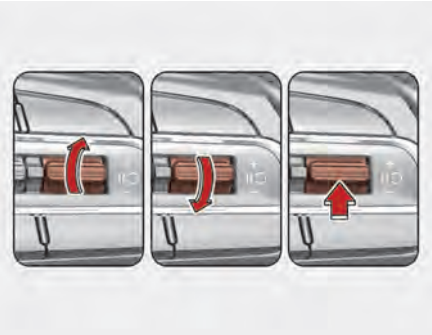
OCK050258N

To resume Smart Cruise Control after the function was canceled, push the +, – or || ⟲ switch.

If you push the + switch up or – switch down, vehicle speed will be set to the current speed on the cluster.

If you push the || ⟲ switch, vehicle speed will resume to the preset speed.

⚠ WARNING

Check the driving condition before press the || ⟲ switch. Driving speed may sharply increase or decrease when you press the || ⟲ switch.

To turn off the function

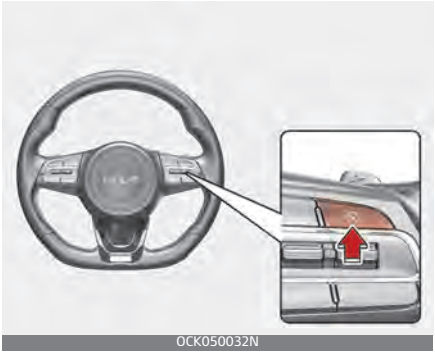
OCK050032N

Press the Driving Assist button to turn Smart Cruise Control off.

To adjust the sensitivity of smart cruise control

SCC Reaction

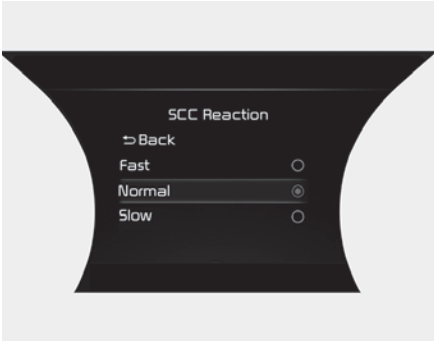

OCK050319L

The sensitivity of vehicle speed when following the front vehicle to maintain the set distance can be adjusted. Go to the "User Settings (LCD display) or Setup → Vehicle (Infotainment System screen) → Driver Assistance → SCC Reaction → Fast/Normal/Slow". You may select one of the three stages you prefer.

Warning Volume

OCK050303L

With the ENGINESTART/STOP button in the ON position, select 'Driver Assistance → Warning Volume' from the "User Settings (LCD display) or Setup → Vehicle (Infotainment System screen)" menu to change the Warning Volume to 'High', 'Medium', 'Low' for Smart Cruise Control.

If you change the Warning Volume, the Warning Volume of other Driver Assistance systems may change.

✻ NOTICE

If the engine is restarted, Warning Volume will maintain the last setting.

Function operating

Operating conditions

Smart Cruise Control will operate when the following conditions are satisfied.

Basic function

- The gear is in D (Drive)
- The driver's door is closed
- EPB (Electronic Parking Brake) is not applied
- Your vehicle speed is within the operating speed range
  5~120 mph (10~200 km/h): when there is no vehicle in front
  0~120 mph (0~200 km/h): when there is a vehicle in front
- ESC (Electronic Stability Control), TCS (Traction Control System) or ABS is on
- ESC (Electronic Stability Control), TCS (Traction Control System) or ABS is not controlling the vehicle
- Engine rpm is not in the red zone
- Forward Collision-Avoidance Assist brake control is not operating
- ISG system is not operating

NOTICE

At a stop, if there is vehicle in front of your vehicle, the function will turn on when the brake pedal is depressed.

Overtaking Acceleration Assist

Overtaking Acceleration Assist will operate when the turn signal indicator is turned on to the left (left-hand drive) or turned on to the right (right-hand drive) while Smart Cruise Control is operating, and the following conditions are satisfied:

- Your vehicle speed is above 40 mph (60 km/h)
- The hazard warning flasher is off
- A vehicle is detected in front of your vehicle
- Deceleration is not needed to maintain distance with the vehicle in front

WARNING

- When the turn signal indicator is turned on to the left (left-hand drive) or turned on to the right (right-hand drive) while there is a vehicle ahead, the vehicle may accelerate temporarily. Pay attention to the road conditions at all times.
- Regardless of your countries driving direction, Overtaking Acceleration Assist will operate when the conditions are satisfied. When using the function in countries with different driving direction, always check the road conditions at all times.

Basic function

Operating

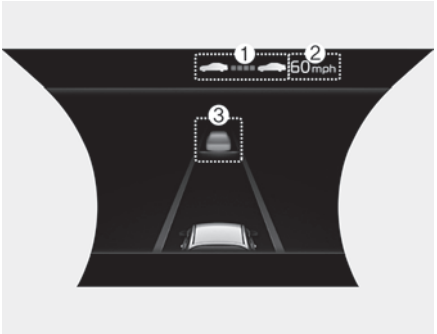

OCK050259N

Temporarily canceled

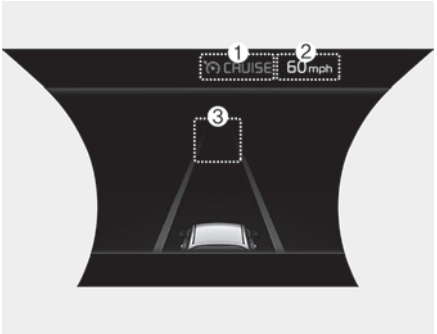

OCK050332N

You can see the status of the Smart Cruise Control operation in the Driving Assist view on the cluster. Refer to "Instrument cluster" on page 4-68.

Smart Cruise Control will be displayed as below depending on the status of the function.

- When operating

(1) Whether there is a vehicle ahead and the selected distance level are displayed.

(2) Set speed is displayed.

(3) Whether there is a vehicle ahead and the target vehicle distance are displayed.

- When temporarily canceled

(1) CRUISE indicator is displayed.

(2) The previous set speed is shaded.

NOTICE

- The actual distance with the front vehicle is displayed.
- The target distance may vary according to the vehicle speed and the set distance level. If vehicle speed is low, even though the vehicle distance have changed, the change of the target vehicle distance may be small.

To temporarily accelerate

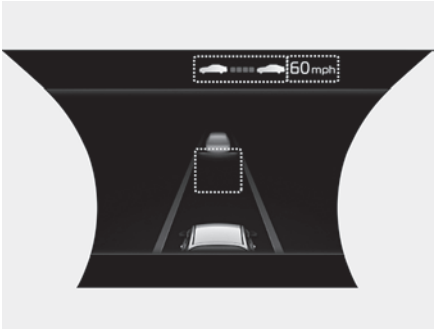

OCK050261N

If you want to speed up temporarily when Smart Cruise Control is on, depress the accelerator pedal for a certain amount. While depressing the accelerator pedal for a certain

amount, the set speed, distance level and target distance will blink on the cluster. However, if the accelerator pedal is insufficiently depressed, the vehicle may slow down.

⚠ WARNING

Be careful when accelerating temporarily, because the speed is not controlled automatically even if there is a vehicle in front of you.

Function temporarily canceled

OCK050353L

Smart Cruise Control will be temporarily canceled automatically when:

- The vehicle speed is above 130 mph (210 km/h)
- The vehicle is stopped for a certain period of time
- The accelerator pedal is continuously depressed for a certain period of time
- The conditions for Smart Cruise Control to operate is not satisfied

If the function is temporarily canceled, the 'Smart Cruise Control canceled' warning message will appear on the cluster, and an audible warning will sound to warn the driver.

If Smart Cruise Control is temporarily canceled while the vehicle is at a standstill with the function operating, EPB (Electronic Parking Brake) maybe applied.

⚠ WARNING

When the function is temporarily canceled, distance with the front vehicle will not be maintained. Always have your eyes on the road while driving, and if necessary, depress the brake pedal to reduce your driving speed in order to maintain a safe distance.

Function conditions not satisfied

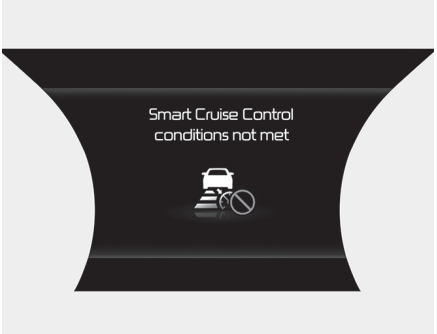

OCK050262L

If the Driving Assist button +, – or || switch is pushed when the function's operating conditions are

not satisfied, the 'Smart Cruise Control conditions not met' will appear on the cluster, and an audible warning will sound.

In traffic situation

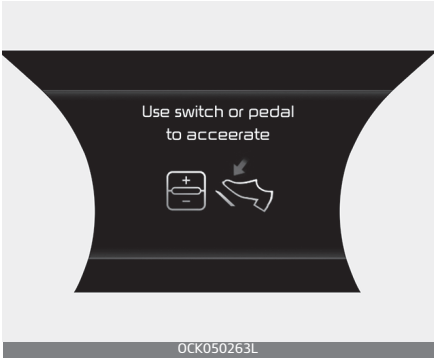

In traffic, your vehicle will stop if the vehicle ahead of you stops. Also, if the vehicle ahead of you starts moving, your vehicle will start as well. In addition, after the vehicle has stopped and a certain time have passed, the 'Use switch or pedal to accelerate' message will appear on the cluster. Depress the acceleratorpedal or push the + switch, – switch or || ↻ switch to start driving.

⚠ WARNING

While the message is displayed on the cluster, if there is no vehicle in front or the vehicle is far away from you, and the + switch, – switch or || ↻ switch is pushed, Smart Cruise Control will automatically cancel and the EPB will be applied. However, if the accelerator pedal is depressed, EPB will not be applied even though the function is canceled. Always pay attention to the road condition ahead.

Warning road conditions ahead

In the following situation, the 'Watch for surrounding vehicles' warning message will appear on the cluster, and an audible warning will sound to warn the driver of road conditions ahead.

The vehicle in front disappears when Smart Cruise Control is maintaining the distance with the vehicle ahead while driving in low speed.

⚠ WARNING

Always pay attention to vehicles or objects that may suddenly appear in front of you, and if necessary, depress the brake pedal to reduce

your driving speed in order to maintain a safe distance.

Collision warning

While Smart Cruise Control is operating, when the collision risk with the vehicle ahead is high, the 'Collision Warning' warning message will appear on the cluster, and an audible warning will sound to warn the driver. Always have your eyes on the road while driving, and if necessary, depress the brake pedal to reduce your driving speed in order to maintain a safe distance.

⚠ WARNING

- In the following situations, Smart Cruise Control may not warn the driver of a collision.
  - The distance from the front vehicle is near, or the vehicle speed of the other vehicle is faster or similar with your vehicle
  - The speed of the front vehicle is very slow or is at a standstill
  - The accelerator pedal is depressed right after Smart Cruise Control is turned on

⚠ WARNING

Take the following precautions when using Smart Cruise Control :

- Smart Cruise Control does not substitute for proper and safe driving. It is the responsibility of the driver to always check the speed and distance to the vehicle ahead.
- Smart Cruise Control may not recognize unexpected and sudden situations or complex driving situations, so always pay attention to driving conditions and control your vehicle speed.
- Keep Smart Cruise Control off when the function is not in use to avoid inadvertently setting a speed.
- Do not open the door or leave the vehicle when Smart Cruise Control is operating, even if the vehicle is stopped.
- Always be aware of the selected speed and vehicle distance distance.
- Keep a safe distance according to road conditions and vehicle speed. If the vehicle distance distance is

too close during high-speed driving, a serious collision may result.
- When maintaining distance with the vehicle ahead, if the front vehicle disappears, the function may suddenly accelerate to the set speed. Always be aware of unexpected and sudden situations from occurring.
- Vehicle speed may decrease on an upward slope and increase on a downward slope.
- Always be aware of situations such as when a vehicle cuts in suddenly.
- When you are towing a trailer or another vehicle, we recommend that Smart Cruise Control is turned off due to safety reasons.
- Turn off Smart Cruise Control when your vehicle is being towed.
- Smart Cruise Control may not operate normally if interfered by strong electromagnetic waves.
- Smart Cruise Control may not detect an obstacle in front and lead to a collision. Always look ahead cautiously to prevent unexpected and sudden situations from occurring.
- Vehicles moving in front of you with a frequent lane change may cause a delay in the function's reaction or may cause the function to react to a vehicle actually in an adjacent lane. Always drive cautiously to prevent unexpected and sudden situations from occurring.
- Always be aware of the surroundings and drive safely, even though a warning message does not appear or an audible warning does not sound.
- If any other function's warning message is displayed or warning sound is generated, Smart Cruise Control warning message may not be displayed and warning sound may not be generated.
- You may not hear the warning sound of Forward Collision-Avoidance Assist if the surrounding is noisy.
- The vehicle manufacturer is not responsible for any traffic violation or accidents caused by the driver.
- Always set the vehicle speed under the speed limit in your state.

NOTICE

- Smart Cruise Control may not operate in few seconds after the vehicle is started or the front view camera or front radar is initialized.
- You may hear a sound when the brake is controlled by Smart Cruise Control.

Function malfunction and limitations

Function malfunction

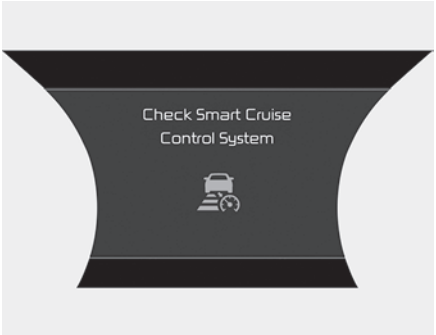

OCK050354L

The message will appear when Smart Cruise Control is not functioning normally. In this case, take your vehicle to an authorized Kia dealer and have the function checked.

Function disabled

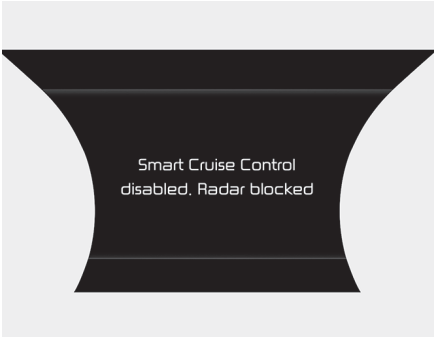

OCK050267L

When the front radar cover or sensor is covered with snow, rain, or foreign matters, it can reduce the detecting performance and temporarily limit or disable Smart Cruise Control.

If this occurs the 'SCC (Smart Cruise Control) disabled. Radar blocked' warning message, and warning lights will illuminate on the cluster.

The function will operate normally when such snow, rain or foreign matter is removed.

⚠ WARNING

Even though the warning message does not appear on the cluster, Smart Cruise Control may not properly operate.

⚠ CAUTION

Smart Cruise Control may not properly operate in an area (e.g. open terrain), where any substance are not detected after turning ON the engine.

Limitations of the function

Smart Cruise Control may not operate normally, or the function may operate unexpectedly under the following circumstances:

- The detecting sensor or the surroundings are contaminated or damaged
- Washer fluid is continuously sprayed, or the wiper is on

- The camera lens is contaminated due to tinted, filmed or coated windshield, damaged glass, or stuck of foreign matters (sticker, bug, etc.) on the glass
- Moisture is not removed or frozen on the windshield
- The field of view of the front view camera is obstructed by sun glare
- Street light or light from an oncoming vehicle is reflected on the wet road surface, such as a puddle in the road
- The temperature around the front view camera is high or low
- An object is placed on the dashboard
- The surrounding is very bright
- The surrounding is very dark, such as in a tunnel, etc.
- The brightness changes suddenly, for example when entering or exiting a tunnel
- The brightness outside is low, and the headlamps are not on or are not bright
- Driving in heavy rain or snow, or thick fog
- Driving through steam, smoke or shadow
- Only part of the vehicle is detected
- The vehicle in front has no tail lights, tail lights are located unusually, etc.
- The brightness outside is low, and the tail lamps are not on or are not bright
- The rear of the front vehicle is small or does not look normal (i.e. tilted, overturned, etc.)
- The front vehicle's ground clearance is low or high
- Your vehicle is being towed
- A vehicle suddenly cuts in front
- Driving through a tunnel or railroad bridge
- A material is near that reflects very well on the front radar, such as a guardrail, nearby vehicle, etc.
- The bumper around the front radar is impacted, damaged or the front radar is out of position
- The temperature around the front radar is high or low
- Driving in large areas where there are few vehicles or structures (i.e. desert, meadow, suburb, etc.)
- The vehicle in front is made of material that does not reflect on the front radar
- Driving near a highway (or motorway) interchange or tollgate
- Driving on a slippery surface due to snow, water puddle, ice, etc.
- Driving on a curved road
- The vehicle in front is detected late
- The vehicle in front is suddenly blocked by a obstacle
- The vehicle in front suddenly changes lane or suddenly reduces speed
- The vehicle in front is bent out of shape

- The front vehicle's speed is fast or slow
- With a vehicle in front, your vehicle changes lane at low speed
- The vehicle in front is covered with snow
- You are driving unstably
- You are on a roundabout and the vehicle in front is not detected
- You are continuously driving in a circle
- Driving in a parking lot
- Driving through a construction area, unpaved road, partial paved road, uneven road, speed bumps, etc.
- Driving on an incline road, curved road, etc.
- Driving through a roadside with trees or streetlights
- The adverse road conditions cause excessive vehicle vibrations while driving
- Your vehicle height is low or high due to heavy loads, abnormal tire pressure, etc.
- Driving through a narrow road where trees or grass or overgrown
- There is interference by electromagnetic waves, such as driving in an area with strong radio waves or electrical noise

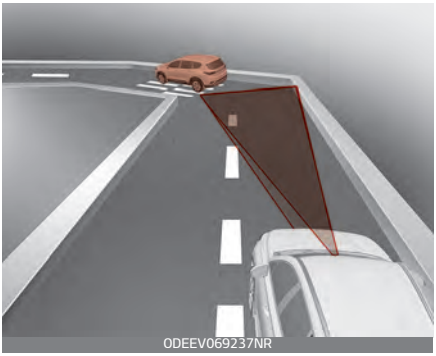

- **Driving on a curve**

On curves, Smart Cruise Control may not detect a vehicle in the same lane, and may accelerate to the set speed. Also, vehicle speed may rapidly decrease when the vehicle ahead is detected suddenly.

Select the appropriate set speed on curves and apply the brake pedal or accelerator pedal according to the road and driving conditions ahead.

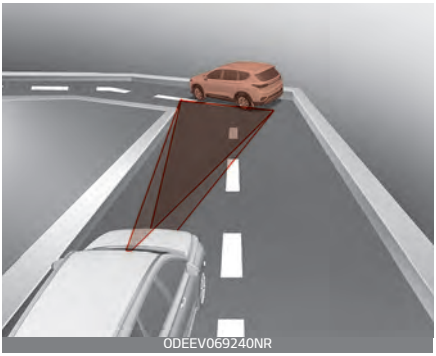

Your vehicle speed can be reduced due to a vehicle in the adjacent lane.

Apply the accelerator pedal and select the appropriate set speed.

Check to be sure that the road conditions permit safe operation of Smart Cruise Control.

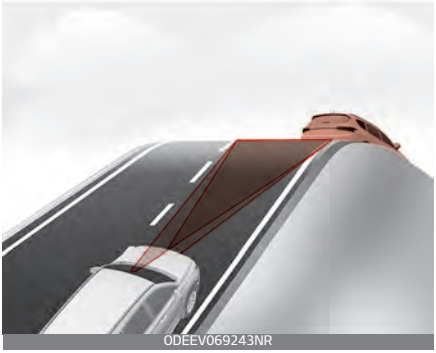

- **Driving on a slope**

During uphill or downhill driving, Smart Cruise Control may not detect a moving vehicle in your lane, and cause your vehicle to accelerate to the set speed. Also, vehicle speed will rapidly decrease when the vehicle ahead is detected suddenly.

Select the appropriate set speed on inclines and apply the brake pedal or accelerator pedal according to the road and driving conditions ahead.

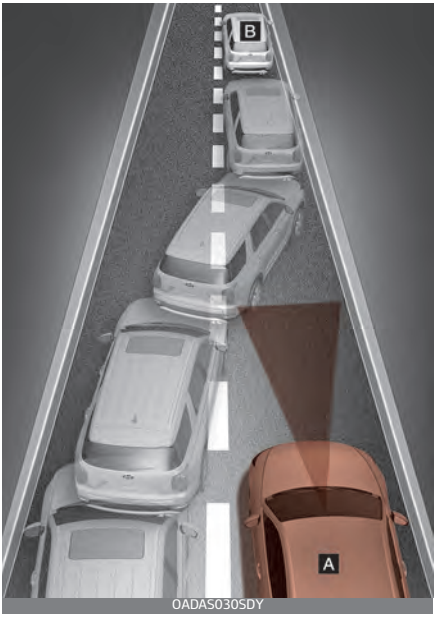

- **Changing lanes**

[A]: Your vehicle, [B]: Lane changing vehicle

When a vehicle moves into your lane from an adjacent lane, it cannot be detected by the sensor until it is in the sensor's detection range.

Smart Cruise Control may not immediately detect the vehicle when the vehicle changes lanes abruptly. In this case, you must maintain a safe braking distance, and if necessary, depress the brake pedal to reduce your driving speed in order to maintain a safe distance.

- **Detecting vehicle**

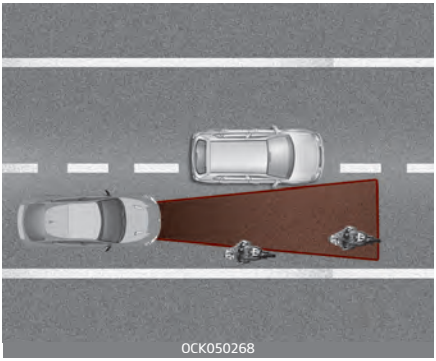

In the following cases, some vehicles in your lane cannot be detected by the sensor:

- Vehicles offset to one side
- Slow-moving vehicles or sudden-decelerating vehicles
- Oncoming vehicles
- Stopped vehicles
- Vehicles with small rear profile, such as trailers
- Narrow vehicles, such as motorcycles or bicycles
- Special vehicles
- Animals and pedestrians

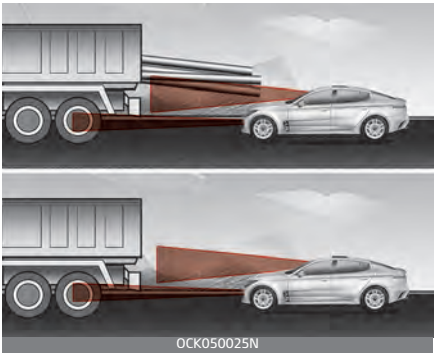

In the following cases, the vehicle in front cannot be detected by the sensor:

- Vehicles with higher clearance or vehicles carrying loads that stick out of the back of the vehicle
- Vehicles that has the front lifted due to heavy loads
- You are steering your vehicle
- Driving on narrow or sharply curved roads

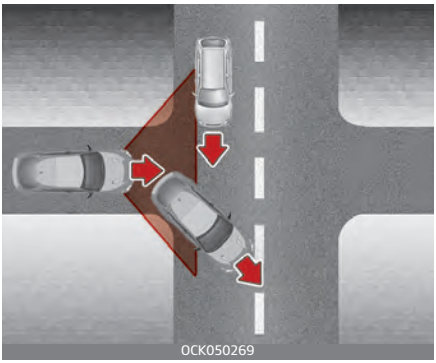

When a vehicle ahead disappears at an intersection, your vehicle may accelerate. Always pay attention to road and driving conditions while driving.

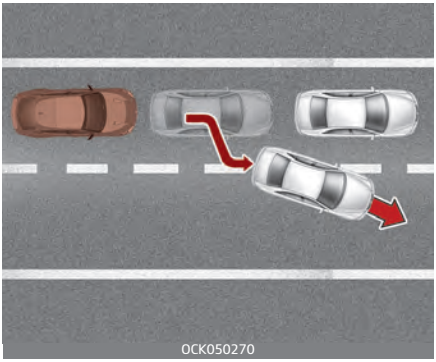

When a vehicle in front of you merges out of the lane, Smart Cruise Control may not immediately detect the new vehicle that is now in front of you. Always pay attention to road and driving conditions while driving.

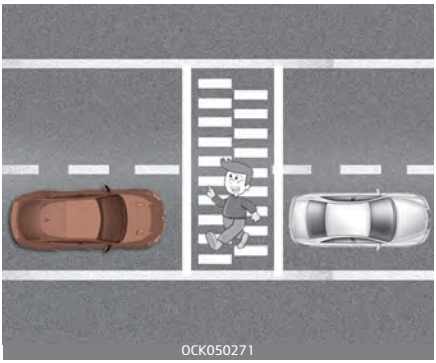

Always look out for pedestrian when your vehicle is maintaining a distance with the vehicle ahead.

This device complies with Part 15 of the FCC rules.

Operation is subject to the following three conditions:

1. This device may not cause harmful interference, and
2. This device must accept any interference received, including interference that may cause undesired operation.
3. Changes or modifications not expressly approved by the party responsible for compliance could void the user's authority to operate the device.

Radio frequency radiation exposure information:

This equipment complies with FCC radiation exposure limits set forth for an uncontrolled environment. This equipment should be installed and operated with minimum distance of 8 in (20 cm) between the radiator (antenna) and your body.

This transmitter must not be co-located or operating in conjunction with any other antenna or transmitter.

Navigation-based Smart Cruise Control (NSCC) (if equipped)

Navigation-based Smart Cruise Control will help automatically adjust vehicle speed when driving on highways (or motorways) with speed limits by using road information from the navigation system while Smart Cruise Control is operating.

✻ NOTICE

- Navigation-based Smart Cruise Control is available only on controlled access road of certain highways.
  * Controlled access road indicates roads with limited entrances and exits that allow uninterrupted high speed traffic flow. Only passenger cars and motorcycles are allowed on controlled access roads.
- Additional highways may be expanded by future navigation updates.

✻ NOTICE

Navigation-based Smart Cruise Control operates on main roads of highways (or motorways), and does not operate on interchanges or junctions.

Highway Curve Zone Auto Slowdown

If vehicle speed is high, Highway Curve Zone Auto Slowdown function will temporarily decelerate your vehicle to help you drive safely on a curve, based on the curve information from the navigation.

Set Speed Auto Change

Set Speed Auto Change function changes Smart Cruise Control set speed based on the speed limit information from the navigation.

Function settings

Setting

Highway Curve Zone Auto Slowdown

- With the ENGINE START/STOP button in the ON position, select "Driver Assistance → Driving Convenience → Highway Auto Speed Change" from the "User Settings

(LCD display) or Setup → Vehicle (Infotainment System screen)" to turn on Navigation-based Smart Cruise Control and deselect to turn off the function.

✻ NOTICE

When there is a problem with Navigation-based Smart Cruise Control, the function cannot be set from the "User Settings (LCD display) or Setup → Vehicle (Infotainment System screen)".

Function operation

Operating conditions

Navigation-based Smart Cruise Control is ready to operate if all of the following conditions are satisfied:

- Smart Cruise Control is operating
- Driving on main roads of highways (or motorways)

✻ NOTICE

For more details on how to operate Smart Cruise Control, refer to "Smart Cruise Control (SCC)" on page 5-112.

Display and control

When Navigation-based Smart Cruise Control operates, it will be displayed on the cluster as follows:

Function standby

OCK050272N

If the operating conditions are satisfied, the white (AUTO) indicator will illuminate.

Function operating

OCK050273N

If temporary deceleration is required in the standby state and Navigation-based Smart Cruise Control is operating, the green

(AUTO) symbol will illuminate on the cluster.

If the Set Speed Auto Change function operates, the green (AUTO) symbol and green set speed will illuminate on the cluster, and an audible alarm will sound.

WARNING

'Drive carefully' warning message will appear in the following circumstances:

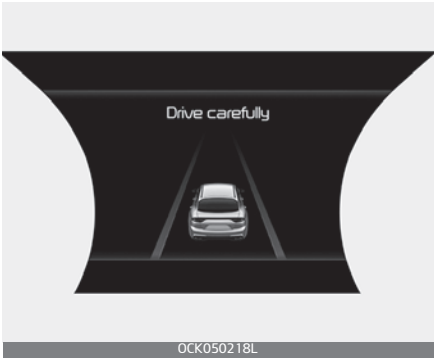

- Navigation-based Smart Cruise Control is not able to slow down your vehicle to a safe speed.

NOTICE

Highway Curve Zone Auto Slowdown and Set Speed Auto Change function uses the same (AUTO) symbol.

Highway Curve Zone Auto Slowdown

- Depending on the curve ahead on the highway (or motorway), the vehicle will decelerate, and after passing the curve, the vehicle will accelerate to Smart Cruise Control set speed.
- Vehicle deceleration time may differ depending on the vehicle speed and the degree of the curve on the road. The higher the driving speed, the faster the vehicle will decelerate.

Set Speed Auto Change

- Set Speed Auto Change function will operate when Smart Cruise Control set speed and the highway (or motorway) speed limit is matched.
- While Set Speed Auto Change function is operating, when the highway (or motorway) speed limit changes, Smart Cruise Control set speed automatically changes to the changed speed limit.
- If Smart Cruise Control set speed is adjusted different from the speed limit, Set Speed Auto Change function will be in the standby state.
- If Set Speed Auto Change function has changed to the standby state by driving on a road other than the highway (or motorway) main

road, Set Speed Auto Change function will operate again when you drive on the main road again. At this time, the set speed does not need to be adjusted.
- If Set Speed Auto Change function has changed to the standby state by depressing the brake pedal, press the (||↻) switch to restart the Highway Set Speed Auto Change function.
- Set Speed Auto Change function does not operate on highway interchanges or junctions.

✻ NOTICE

- Set Speed Auto Change function only operates based on the speed limits of the highway (or motorway), but it does not work with the speed cameras.
- When Set Speed Auto Change function is operating, the vehicle automatically accelerates or decelerates when the highway (or motorway) speed limit changes.
- If the speed limit is higher than the speed limit of the speed camera while Set Speed Auto Change function is operating, an audible warning may sound.
- The maximum set speed for Set Speed Auto Change function to operate is 90 mph (140 km/h).
- If the speed limit of a new road is not reflected in the navigation, Set Speed Auto Change function may not operate properly.
- If the speed unit is set to a unit other than the speed unit used in your state, Set Speed Auto Change function may not operate properly.

Limitations of the function

Navigation-based Smart Cruise Control may not operate normally under the following circumstances:
- The navigation is not working properly.
- The navigation is not updated to include the latest information about road curvature and changes.
- Speed limit and road information in the navigation is not updated
- The map information and the actual road is different because of real-time GPS data or map information error
- The navigation searches for a route while driving
- GPS signals are blocked in areas such as a tunnel
- A road that divides into two or more roads and joins again
- The driver goes off course the route set in the navigation
- The route to the destination is changed or canceled by resetting the navigation (including TPEG change)

- The navigation cannot detect the current vehicle position (ex: elevated roads including overpass adjacent to general roads or nearby roads exist in a parallel way)
- The vehicle enters a service station or rest area
- The speed limit of some sections changes depending on the road situations
- Android Auto or Car Play is operating
- The navigation is being updated while driving
- The navigation is being restarted while driving

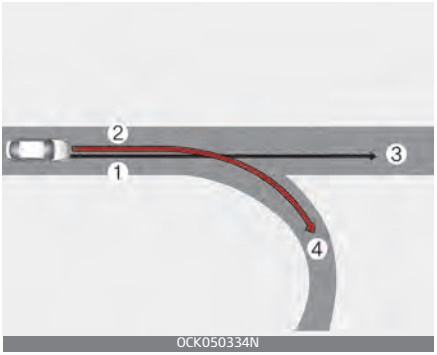

[1]: Driving route, [2]: Set route, [3]: Main road, [4]: Branch line

- When there is a difference between the navigation set route (branch line) and the driving route (main road), Highway Curve Zone Auto Slowdown function may not operate until the driving route is recognized as the main road.
- When the vehicle's driving route is recognized as the main road by maintaining the main road instead of the navigation set route, Highway Curve Zone Auto Slowdown function will operate. Depending on the distance to the curve and the current vehicle speed, vehicle deceleration may not be sufficient or may decelerate rapidly.

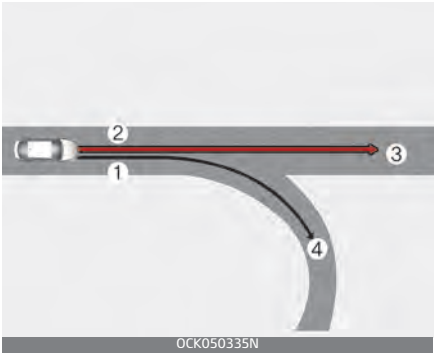

[1]: Driving route, [2]: Main road, [3]: Set route, [4]: Branch line

- When there is a difference between the navigation route (main road) and the driving route (branch line), Highway Curve Zone Auto Slowdown function may temporarily operate due to the navigation information of the highway curve section.
- When it is judged that you are driving out of the route by entering the highway interchange and junction, Highway Curve Zone Auto Slowdown function will not operate.

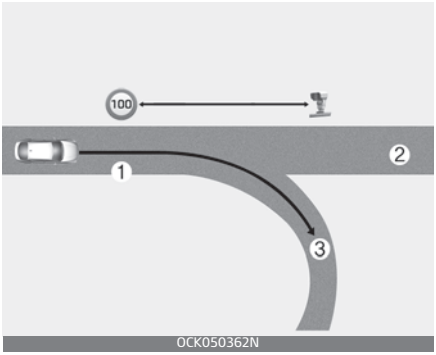

[1]: Driving route, [2]: Main road, [3]: Branch line

- If there is no destination set on the navigation, Highway Curve Zone Auto Slowdown function will operate based on the curve information on the main road.
- Even if you depart from the main road, Highway Curve Zone Auto Slowdown function may temporarily operate due to navigation information of the highway curve section.

WARNING

- Navigation-based Smart Cruise Control is not a substitute for safe driving practices, but a convenience function. Always have your eyes on the road, and it is the responsibility of the driver to avoid violating traffic laws.
- The navigation's speed limit information may differ from the actual speed limit information on the road. It is the driver's responsibility to check the speed limit on the actual driving road or lane.
- Highway Curve Zone Auto Slowdown and Set Speed Auto Change function will automatically cancel when you leave the main road of the highway. Always pay attention to road and driving conditions while driving.
- Navigation-based Smart Cruise Control may not operate due to the existence of leading vehicles and the driving conditions of the vehicle. Always pay attention to road and driving conditions while driving.
- When you are towing a trailer or another vehicle, we recommend that Navigation-based Smart Cruise Control is turned off due to safety reasons.

- After you pass through a tollgate on a highway, Navigation-based Smart Cruise Control operates based on the first lane. If you enter one of the other lanes, the function might not properly decelerate.
- The vehicle will accelerate if the driver depresses the accelerate pedal while Navigation-based Smart Cruise Control is operating, and function will not decelerate the vehicle. However, if the accelerator pedal is insufficiently depressed, the vehicle may slow down.
- If the driver accelerates and releases the accelerator pedal while Navigation-based Smart Cruise Control is operating, the vehicle may not decelerate sufficiently or may rapidly decelerate to a safe speed.
- If the curve is too large or too small, Navigation-based Smart Cruise Control may not operate.

NOTICE

- When the function is activated, the vehicle decelerates automatically before reaching the curved road according to its curvature, and the driving speed returns to the speed set by Smart Cruise Control after passing the curved section.
- The speed information on the cluster and navigation may differ.
- The time gap could occur between the navigation's guidance and when Navigation-based Smart Cruise Control operation starts and ends.
- Even if you are driving at a speed lower than Smart Cruise Control set speed, acceleration may be limited by the speeding cameras and curve sections ahead.
- If Navigation-based Smart Cruise Control is operating while leaving the main road to enter an interchange, junction, rest area, etc., the function may operate for a certain period of time.
- Deceleration by Navigation-based Smart Cruise Control may not be sufficient due to road conditions such as uneven road surfaces, narrow lanes, etc.

Lane Following Assist (LFA)

Lane Following Assist is designed to detect lane markings or vehicles on the road, and assists the driver's steering to help keep the vehicle between lanes.

✻ NOTICE

LFA stands for Lane Following Assist.

Detecting sensor

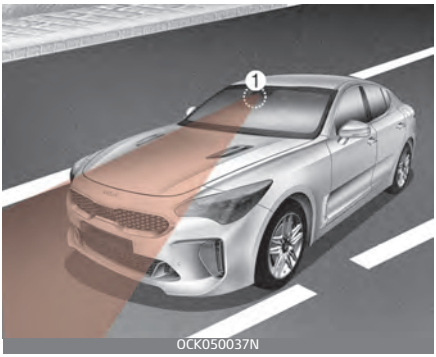

OCK050037N

[1]: Front view camera

The front view camera is used as a detecting sensor to detect lane markings and front vehicles.

Refer to the picture above for the detailed location of the detecting sensor.

⚠ CAUTION

For more details on the precautions of the front view camera, refer to "Forward Collision-Avoidance Assist (FCA) (Sensor fusion)" on page 5-65.

Function settings

Setting

Turning the function ON/OFF

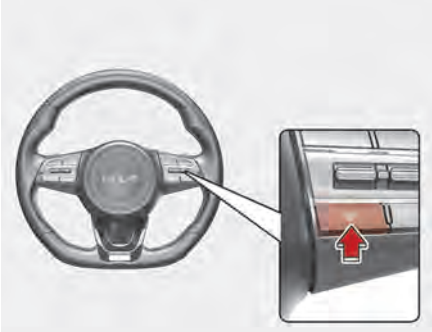
OCK050274N

With the ENGINE START/STOP button in the ON position, press the Lane Driving Assist button located on the steering wheel to turn on Lane Following Assist. The white or green ( ) indicator light will illuminate on the cluster.

Press the button again to turn off the function.

Warning Volume

OCK050303L

With the ENGINE START/STOP button in the ON position, select 'Driver Assistance → Warning Volume' from the 'User Setting (LCD display) or Setup → Vehicle (Infotainment System screen)' to change the Warning Volume to 'High', 'Medium' or 'Low' for Hands-off warning.

If you change the Warning Volume, the Warning Volume of other Driver Assistance functions may change.

NOTICE

If your vehicle is equipped with additional Infotainment System, please scan the QR code in a separately supplied Car Infotainment System Quick Reference Guide.

Function operation

Warning and control

Lane Following Assist

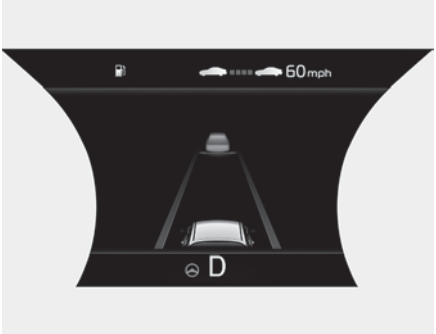

OCK050275N

If the vehicle ahead or both lane markings are detected and your vehicle speed is below 120 mph (200 km/h), the green ( ) indicator light will illuminate on the cluster, and the function will help the vehicle stay in lane by controlling the steering wheel.

CAUTION

When the steering wheel is not controlled, the green ( ) indicator light will blink and change to white.

Hands-off warning

OCK050228L

If the driver takes their hands off the steering wheel for several seconds, the 'Keep hands on steering wheel' warning message will appear and an audible warning will sound in stages.

- First stage: Warning message
- Second stage: Warning message (red steering wheel) and audible warning

OCK050277L

If the driver still does not have their hands on the steering wheel after the hands-off warning, the 'Lane Following Assist (LFA) canceled' warning message will appear and Lane Following Assist will be automatically canceled.

WARNING

- The steering wheel may not be assisted if the steering wheel is held very tight or the steering wheel is steered over a certain degree.
- Lane Following Assist does not operate at all times. It is the responsibility of the driver to safely steer the vehicle and to maintain the vehicle in its lane.
- The hands–off warning message may appear late depending on road conditions. Always have your hands on the steering wheel while driving.
- If the steering wheel is held very lightly the hands–off warning message may appear because the function may not recognize that the driver has their hands on the steering wheel.
- If you attach objects to the steering wheel, the hands-off warning may not work properly.

NOTICE

- For more details on setting the functions in the infotainment function, refer to "LCD display modes" on page 4-75.

- When both lane markings are detected, the lane lines on the cluster will change from gray to white.

Lane undetected

OCK050229N

Lane detected

OCK050230N

- If lane markings are not detected, steering wheel control by Lane Following Assist can be limited depending on whether a vehicle is in front or the driving conditions of the vehicle.
- Even though the steering is assisted by Lane Following Assist, the driver may control the steering wheel.
- The steering wheel may feel heavier or lighter when the steering wheel is assisted by the function than when it is not.

Function malfunction and limitations

Function malfunction

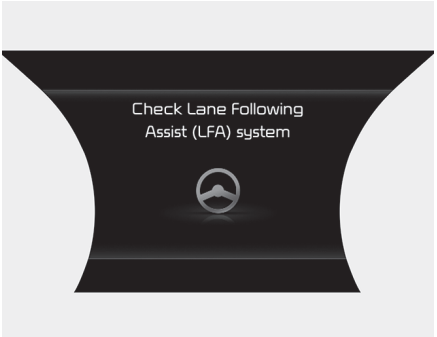

OCK050280L

When Lane Following Assist is not working properly, the 'Check Lane Following Assist (LFA) system' warning message will appear on the cluster (turns off after a certain time) and (⚠) warning light will illuminate.

In this case, have the function checked by an authorized Kia dealer.

Highway Driving Assist (HDA) (if equipped)

Highway Driving Assist is designed to detect vehicles and lanes ahead, and help maintain distance from the vehicle ahead, maintain the set speed, and keep the vehicle between lanes.

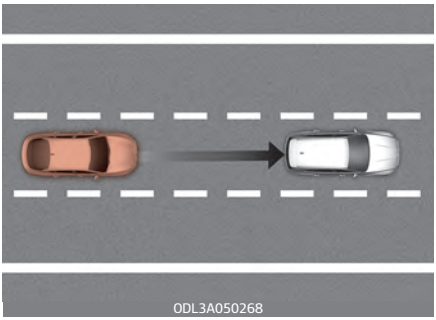

NOTICE

- HDA stands for Highway Driving Assist.
- Highway Driving Assist operates on main roads of highways (or motorways), and does not operate on interchanges or junctions.

NOTICE

- Highway Driving Assist is available only on controlled access road of certain highways.

* Controlled access road indicates roads with limited entrances and exits that allow uninterrupted high speed traffic flow. Only passenger cars and motorcycles are allowed on controlled access roads.

Available highway (Controlled access road)	
USA	Select Interstate Highway and U.S. (Federal) and State Highways
Canada	Select Provincial and Territorial Highways

- Additional highways may be expanded by future navigation updates.

Detecting sensors

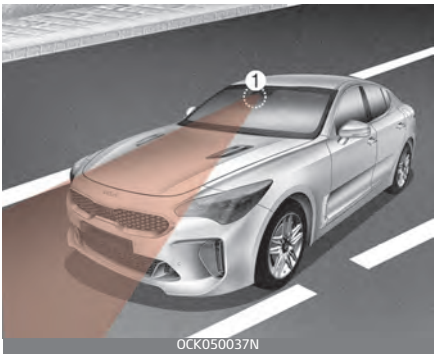

OCK050037N

OCK050023N

[1] : Front view camera, [2]: Front radar

Refer to the picture above for the detailed location of the detecting sensors.

⚠ CAUTION

For more details on the precautions of the detecting sensors, refer to "Forward Collision-Avoidance Assist (FCA) (Sensor fusion)" on page 5-65.

Function settings

Setting

OCK050333N

With the ENGINE START/STOP button in the ON position, select 'Driver Assistance → Driving Convenience' from the setting menu to set whether or not to use each function.

- If 'Highway Driving Assist' is selected, it helps maintain distance from the vehicle ahead, maintain the set speed, and keep the vehicle between lanes.

✻ NOTICE

- If there is a problem with the functions, the settings cannot be changed. We recommend that you have your vehicle inspected by an authorized Kia dealer.
- If the engine is restarted, the functions will maintain the last setting.

⚠ WARNING

For your safety, change the Settings after parking the vehicle at a safe location.

Warning Volume

OCK050303L

With the ENGINE START/STOP button in the ON position, select 'Driver Assistance → Warning Volume' from the "User Settings (LCD display) or Setup → Vehicle (Infotainment System screen)" to change the warning volume to 'High', 'Medium', 'Low' for Highway Driving Assist.

If you change the warning volume, the warning volume of other Driver Assistance systems may change.

Function operation

Function display and control

Operating

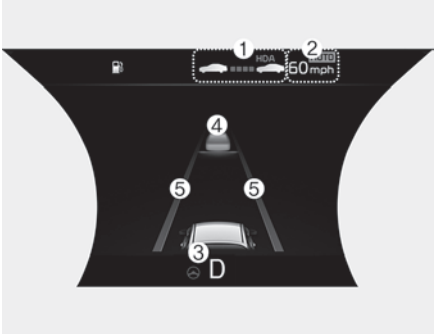

OCK050328N

Standby

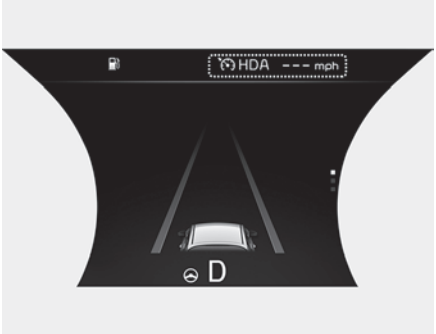

OCK050325N

Highway Lane Change function will be displayed as below depending on the status of the function.

1. Highway Driving Assist indicator, whether there is a vehicle ahead and the selected distance level are displayed.
   - Green (HDA): Operating state
   - White (HDA): Standby state
2. Set speed is displayed.

3. Lane Following Assist indicator displayed.
4. Whether there is a vehicle ahead and the selected distance level are displayed.
5. Whether the lane is detected or not is displayed.

For more details and limitations of Lane Following Assist, refer to "Lane Following Assist (LFA)" on page 5-136.

For more details and limitations of Smart Cruise Control, refer to "Smart Cruise Control (SCC)" on page 5-112.

Function operating

When entering or driving on the main roads of highways (or motorways), and satisfy all the following conditions for the function to operate.

- Lane Following Assist is operating
- Smart Cruise Control is operating

NOTICE

- When Smart Cruise Control is operating while driving on the main roads of highways (or motorways), Highway Driving Assist will operate.
- When entering the main roads of highways (or motorways), Highway Driving Assist will not turn on if Lane Following Assist is turned off even when Smart Cruise Control is operating.

Restarting after stopping

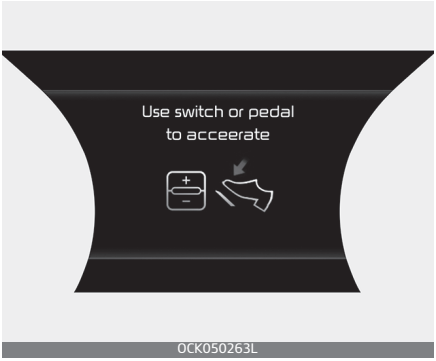

When Highway Driving Assist is operating, your vehicle will stop if the vehicle ahead of you stops. Also, if the vehicle ahead of you starts moving within 30 seconds after the stop, your vehicle will start as well. In addition, after the vehicle has stopped and 30 seconds have passed, the 'Use switch or pedal to accelerate' message will appear on the cluster. Depress the accelerator pedal or push the + switch, – switch or (||↻) switch to start driving.

Hands-off warning

OCK050228L

The hands-off warning appears when the function detects that the driver's hands are not on the steering wheel while HDA is in work.

- First warning: warning message
- Second warning: warning message with warning sound

OCK050322L

If the driver still does not have their hands on the steering wheel after the hands-off warning, the 'Highway Driving Assist (HDA) canceled' warning message will appear and Highway Driving will be automatically canceled.

Function standby

When Smart Cruise Control is temporarily canceled while Highway Driving Assist is operating, Highway Driving Assist will be in standby state. At this time, Lane Following Assist will operate normally.

Function malfunction and limitations

Function malfunction

OCK050323L

When Highway Driving Assist is not working properly, the 'Check Highway Driving Assist (HDA) system' warning message will appear, and the (⚠) warning light will illuminate on the cluster.

Have your vehicle inspected by an authorized Kia dealer.

⚠ WARNING

- The driver is responsible for controlling the vehicle for safe driving.
- Always have your hands on the steering wheel while driving.
- Highway Driving Assist is a supplemental function that assists the driver in driving the vehicle and is not a complete autonomous driving function. Always check road conditions, and if necessary, take appropriate actions to drive safely.
- Always have your eyes on the road, and it is the responsibility of the driver to avoid violating traffic laws. The vehicle manufacturer is not responsible for any traffic violation or accidents caused by the driver.
- Highway Driving Assist may not be able to determine all traffic situations. The function may not detect possible collisions due to limitations of the function. Always be aware of the limitations of the function. Obstacles such as vehicles, motorcycles, bicycles, pedestrians, unspecified objects or structures such as guardrails and tollgates, etc. that may collide with the vehicle may not be detected.
- Highway Driving Assist will turn off automatically under the following situations:
  - Driving on roads that the function does not operate, such as a rest area, intersection, junction, etc.
  - The navigation does not operate properly such as when the navigation is being updated or restarted
- Highway Driving Assist may inadvertently operate or turn off depending on road conditions (navigation information) and surroundings.
- Lane Following Assist may be temporarily disabled when the front view camera cannot detect lanes properly or the hands-off warning is on.
- You may not hear the warning sound of Highway Driving Assist if the surrounding is noisy.
- If the vehicle is driven at high speed above a certain speed at a curve, your vehicle may drive to one side or may depart from the driving lane.
- When you are towing a trailer or another vehicle, we recommend that Highway Driving Assist is turned off due to safety reasons.
- The hands–off warning message may appear early or late depending on how the steering wheel is held or road conditions. Always have your hands on the steering wheel while driving.

- For your safety, please read the owner's manual before using Highway Driving Assist.
- Highway Driving Assist will not operate when the engine is started, or when the detecting sensors or navigation is being initialized.

Limitations of the function

Highway Driving Assist and Highway Lane Change function may not operate normally, or may not operate under the following circumstances:

- The map information and the actual road is different because the navigation is not updated
- The map information and the actual road is different because of real-time GPS data or map information error
- The infotainment system is overloaded by performing functions such as route search, video playback, voice recognition, etc. are performing simultaneously
- GPS signals are blocked in areas such as a tunnel
- The driver goes off course or the route to the destination is changed or canceled by resetting the navigation
- The vehicle enters a service station or rest area
- Android Auto or Car Play is operating
- The navigation cannot detect the current vehicle position (ex: elevated roads including overpass adjacent to general roads or nearby roads exist in a parallel way)

⚠ CAUTION

For more details on the limitations of the front view camera, front radar, refer to "Forward Collision-Avoidance Assist (FCA) (Sensor fusion)" on page 5-65.

Rear Cross-Traffic Collision-Avoidance Assist (RCCA) (if equipped)

Rear Cross-Traffic Collision-Avoidance Assist is designed to detect vehicles approaching from the left and right side while your vehicle is reversing, and warning the driver that a collision is imminent with a warning message and an audible warning. Also, to help prevent collision braking assist is applied.

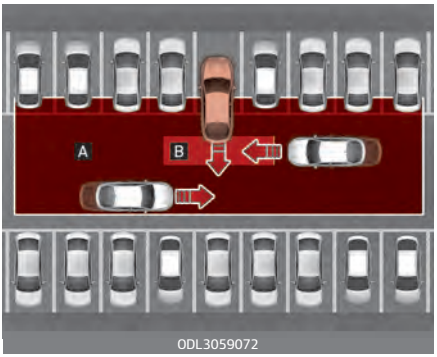

[A]: Rear Cross-Traffic Collision Warning operating range

[B]: Rear Cross-Traffic Collision-Avoidance Assist operating range

CAUTION

The time of warning may vary depending on vehicle speed of the approaching vehicle.

NOTICE

- RCCW stands for Rear Cross-Traffic Collision Warning.
- RCCA stands for Rear Cross-Traffic Collision-Avoidance Assist.
- In the following text, Rear Cross-Traffic Collision Warning and Rear Cross-Traffic Collision-Avoidance Assist will be referred as Rear Cross-Traffic Safety system.

Detecting sensor

[1]: Rear corner radar

Refer to the picture above for the detailed location of the detecting sensor.

CAUTION

For more details on the precautions of the rear corner radar, refer to "Blind-Spot Collision-Avoidance Assist (BCA) (if equipped)" on page 5-89.

Function settings

Setting

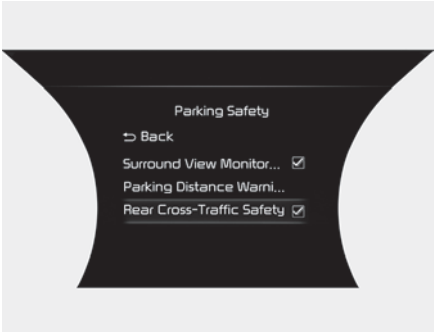

OCK050327L

Rear Cross-Traffic Safety

With the ENGINE START/STOP button in the ON position, select 'Driver Assistance → Parking Safety → Rear Cross-Traffic Safety' from the "User Settings (LCD display) or Setup → Vehicle (Infotainment System screen)" menu to turn on Rear Cross-Traffic Safety system and deselect to turn off the function.

⚠ WARNING

When the engine is restarted, Rear Cross-Traffic Safety system will always turn on. However, if 'Off' is selected after the engine is restarted, the driver should always be aware of the surroundings and drive safely.

✻ NOTICE

Settings for Rear Cross-Traffic Safety system include Rear Cross-Traffic Collision Warning and Rear Cross-Traffic Collision-Avoidance Assist.

✻ NOTICE

If the engine is restarted, Warning Timing and Warning Volume will maintain the last setting.

Warning Timing

OCK050305L

With the ENGINE START/STOP button in the ON position, select 'Driver Assistance → Warning Timing' from the "User Settings (LCD display) or Setup → Vehicle (Infotainment System screen)" menu to change the initial warning activation time for Rear Cross-Traffic Safety system.

When the vehicle is first delivered, warning timing is set to Normal. If you change the warning timing, the

warning time of other Driver Assist systems may change.

Always be aware before changing the warning timing.

Warning Volume

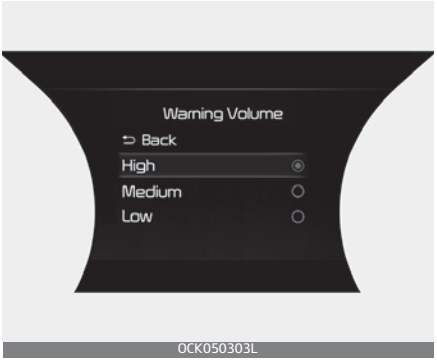

With the ENGINESTART/STOP button in the ON position, select 'Driver Assistance → Warning Volume' from the "User Settings (LCD display) or Setup → Vehicle (Infotainment System screen)" menu to change the Warning Volume to 'High', 'Medium', 'Low' for Rear Cross-Traffic Safety system.

If you change the Warning Volume, the Warning Volume of other Driver Assistance systems may change.

⚠ CAUTION

- The setting of the Warning Timing and Warning Volume applies to all functions of the Rear Cross-Traffic Safety system.
- Even though 'Normal' is selected for Warning Timing, if the vehicles from the left and right side approaches at high speed, the initial warning activation time may seem late.
- Select 'Late' for Warning Timing when traffic is light and when driving speed is slow.

✻ NOTICE

If your vehicle is equipped with additional Infotainment System, please scan the QR code in a separately supplied Car Infotainment System Quick Reference Guide.

Function operation

Function warning and control

Rear Cross-Traffic Safety system will warning and control the vehicle depending on collision level: 'Collision warning', 'Emergency braking' and 'Stopping vehicle and ending brake control'.

Collision warning

ODL3059191

OCK050282N

OCK040610L

- To warn the driver of an approaching vehicle from the rear left/right side of your vehicle, the warning light on the side view mirror (outside mirror) will blink and a warning will appear on the cluster. At the same time, an audible warning will sound.
- The function will operate when the following conditions are satisfied:
  - Your vehicle gear is shifted to R (Reverse)
  - Your vehicle speed is below 5 mph (8 km/h)
  - The approaching vehicle is within approximately 82 ft. (25 m) from the left and right side of your vehicle
  - The speed of the vehicle approaching from the left and right is above 3 mph (5 km/h)

NOTICE

If the operating conditions are satisfied, there will be a warning whenever the vehicle approaches from the left or right side even though your vehicle speed is 0 mph (0 km/h).

Emergency Braking

ODL3059191

OCK050286N

OCK040610L

- Your vehicle, the warning light on the side view mirror (outside mirror) will blink and a warning message will appear on the cluster. At the same time, an audible warning will sound.
- The function will operate when the following conditions are satisfied:
  - Your vehicle gear is shifted to R (Reverse)
  - Your vehicle speed is below 5 mph (8 km/h)
  - The approaching vehicle is within approximately 5 ft. (1.5 m) from the left and right side of your vehicle
  - The speed of the vehicle approaching from the left and right is above 3 mph (5 km/h)
- Emergency braking will be assisted to help prevent collision with approaching vehicles from the left and right.

WARNING

- Brake control will end when:
  - The approaching vehicle is out of the detecting range
  - The approaching vehicle passes behind your vehicle
  - The approaching vehicle does not drive toward your vehicle
  - The approaching vehicle speed slows down
  - The driver depresses the brake pedal with sufficient power

Stopping vehicle and ending brake control

- When the vehicle is stopped due to emergency braking, the 'Drive carefully' warning message will appear on the cluster.
- For your safety, the driver should depress the brake pedal immediately and check the surroundings.
- Brake control will end after the vehicle is stopped by emergency braking for approximately 2 seconds.
- During emergency braking, braking control by the function will automatically cancel when the driver excessively depresses the brake pedal.

⚠ WARNING

- For your safety, change the settings after parking the vehicle at a safe location.
- If any other function's warning message is displayed or audible warning is generated, Rear Cross-Traffic Safety system warning message may not be displayed and audible warning may not be generated.
- You may not hear the warning sound of Rear Cross-Traffic Safety system if the surrounding is noisy.
- Rear Cross-Traffic Safety system may not operate if the driver applies the brake pedal to avoid collision.
- During Rear Cross-Traffic Safety system operation, the vehicle may stop suddenly injuring passengers and shifting loose objects. Always have the seat belt on and keep loose objects secured.
- Even if there is a problem with Rear Cross-Traffic Safety system, the vehicle's basic braking performance will operate normally.

⚠ WARNING

- During emergency braking, braking control by the function will automatically cancel when the driver excessively depresses the accelerator pedal.
- Rear Cross-Traffic Safety system does not operate in all situations or cannot avoid all collisions.
- Rear Cross-Traffic Safety system may warn the driver late or may not warn the driver depend-

ing on the road and driving conditions.

- The driver should hold the responsibility to control the vehicle. Do not solely depend on Rear Cross-Traffic Safety system. Rather, maintain a safe braking distance, and if necessary, depress the brake pedal to reduce driving speed or to stop the vehicle.
- Never deliberately operate Rear Cross-Traffic Safety system on people, animal, objects, etc. It may cause serious injury or death.

⚠ CAUTION

The brake control may not operate properly depending on the status of ESC (Electronic Stability Control). There will only be a warning when:

- The ESC (Electronic Stability Control) warning light is on
- ESC (Electronic Stability Control) is engaged in a different function

✻ NOTICE

The driver must immediately depress the brake pedal and check vehicle surroundings.

- Brake control will end when the driver depresses the brake pedal with sufficient power.
- After shifting the gear to R (Reverse), braking control will operate once for left and right vehicle approach.

Function malfunction and limitations

Function malfunction

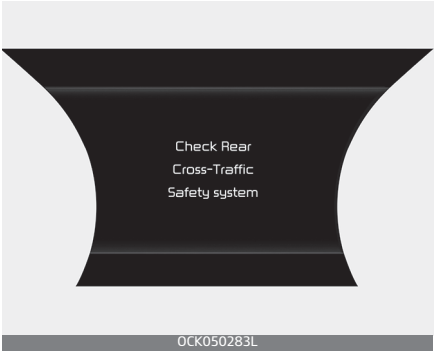

When Rear Cross-Traffic Safety system is not working properly, the 'Check Rear Cross-Traffic Safety system' warning message will appear on the cluster, and the function will turn off automatically or the function will be limited. In this case, have your vehicle inspected by an authorized Kia dealer.

OCK050317L

When the side view mirror (outside mirror) warning light is not working properly, the 'Check side view mirror warning light' warning message will appear on the cluster. In this case, have your vehicle inspected by an authorized Kia dealer.

Function disabled

OCK050284L

When the rear bumper around the rear corner radar or sensor is covered with foreign matters, such as snow or rain, or installing a trailer or carrier, it can reduce the detecting performance and temporarily limit or disable Rear Cross-Traffic Safety system.

If this occurs, the 'Rear Cross-Traffic Safety disabled. Radar blocked' warning message will appear on the cluster. It is not a malfunction.

The function will operate normally when such foreign matters or trailer, etc. is removed.

Always keep the rear view camera and rear ultrasonic sensors clean.

If the function does not operate normally after it is removed, have the function be inspected by an authorized Kia dealer.

⚠ WARNING

- Even though the warning message does not appear on the cluster, Rear Cross-Traffic Safety system may not properly operate.
- Rear Cross-Traffic Safety system may not properly operate in an area (e.g. open terrain), where any substance are not detected after turning ON the engine.

⚠ CAUTION

Turn off Rear Cross-Traffic Safety system to install a trailer, carrier, etc., and remove the trailer, carrier, etc. to use Rear Cross-Traffic Safety system.

Limitations of the function

Rear Cross-Traffic Safety system may not operate normally, or the function may operate unexpectedly under the following circumstances:

- Departing from where trees or grass is overgrown
- Departing from where roads are wet
- Speed of the approaching vehicle is fast or slow

Braking control may not work, driver's attention is required in the following circumstances:

- The vehicle severely vibrates while driving over a bumpy road, uneven road or concrete patch
- Driving on a slippery surface due to snow, water puddle, ice, etc.
- The tire pressure is low or a tire is damaged
- The brake is reworked

⚠ CAUTION

For more details on the limitations of the rear corner radar, refer to "Blind-Spot Collision-Avoidance Assist (BCA) (if equipped)" on page 5-89.

⚠ WARNING

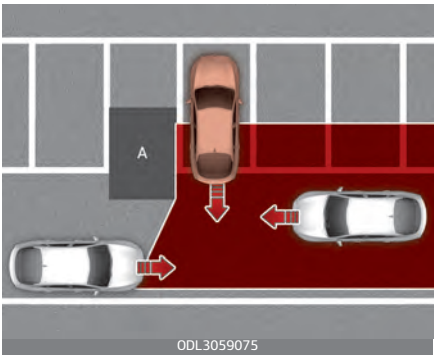

[A]: Structure

- Driving near a vehicle or structure

Rear Cross-Traffic Safety system may be limited when driving near a vehicle or structure, and may not detect the vehicle approaching from the left or right. If this occurs, the function may not warn the driver or control the brakes when necessary.

Always check your surroundings while backing up.

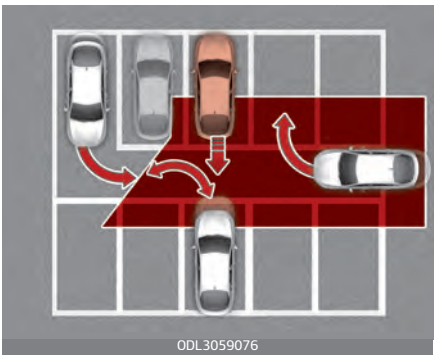

- When the vehicle is in a complex parking environment

Rear Cross-Traffic Safety system may detect vehicles which are parking or pulling out near your vehicle (e.g. a vehicle leaving beside your vehicle, a vehicle parking or pulling out in the rear area, a vehicle approaching your vehicle making a turn, etc.). If this occurs, the function may unnecessarily warn the driver and control the brake.

Always check your surroundings while backing up.

[A]: Vehicle

- When the vehicle is parked diagonally

Rear Cross-Traffic Safety system may be limited when backing up diagonally, and may not detect the vehicle approaching from the left or right. If this occurs, the function may not warn the driver or control the brakes when necessary.

Always check your surroundings while backing up.

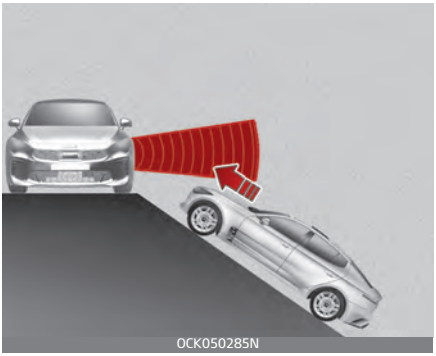

- When the vehicle is on or near a slope

Rear Cross-Traffic Safety system may be limited when the vehicle is on a uphill or downhill slope, or near it, and may not detect the vehicle approaching from the left or right. If this occurs, the function may not warn the driver or control the brakes when necessary.

Always check your surroundings while backing up.

⚠ WARNING

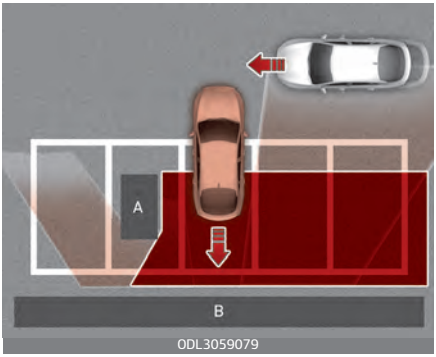

[A]: Structure, [B]: Wall

- Pulling into the parking space where there is a structure

Rear Cross-Traffic Safety system may detect vehicles passing by in front of you when parking backwards into a parking space with a wall or structure in the rear or side area. If this occurs, the function may unnecessarily warn the driver and control the brake.

Always check your surroundings while backing up.

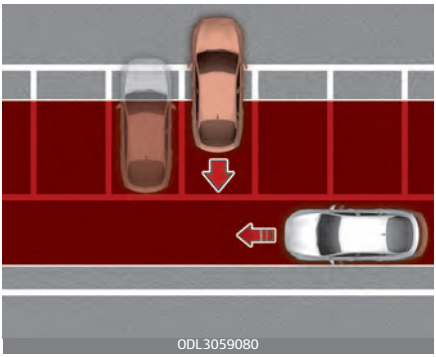

- When the vehicle is parked rearward

Rear Cross-Traffic Safety system may detect vehicles passing by behind you when parking backwards into a parking space. If this occurs, the function may unnecessarily warn the driver and control the brake.

Always check your surroundings while backing up.

⚠ WARNING

- When you are towing a trailer or another vehicle, we recommend that Rear Cross-Traffic Safety system is turned off due to safety reasons.
- Rear Cross-Traffic Safety system may not operate normally if interfered by strong electromagnetic waves.
- Rear Cross-Traffic Safety system may not operate for 3 seconds after the vehicle is started, or the rear corner radars are initialized.

This device complies with Part 15 of the FCC rules.

Operation is subject to the following two conditions:

1. This device may not cause harmful interference, and
2. This device must accept any interference received, including interference that may cause undesired operation.

Declaration of conformity (if equipped)

The radio frequency components (Front Radar) complies:

For United States and United States territories

OYB060040L

FCC ID
: 2ACDX-LRR-20
This device complies with Part 15 of the FCC Rules. Operation is subject to the following two conditions:
(1) this device may not cause harmful interference, and
(2) this device must accept any interference received, including interference that may cause undesired operation.

CAUTION TO USERS
Changes or modifications not expressly approved by the party responsible for compliance could void the user`s authority to operate the equipment.

OCK060055L

For Canada

Model: LRR-20
IC: 1198BA-LRR20

This device complies with Industry Canada licence-
exempt RSS standard(s). Operation is subject to the following two conditions:
(1) this device may not cause interference, and
(2) this device must accept any interference,
including interference that may cause undesired
operation of the device.
Le présent appareil est conforme aux CNR
d'Industrie Canada applicables aux appareils
radio exempts de licence. L'exploitation est autorisée
aux deux conditions suivantes:
(1) l'appareil ne doit pas produire de brouillage,
et
(2) l'utilisateur de l'appareil doit accepter tout
brouillage radioélectrique subi, même si le
brouillage est susceptible d'en compromettre
le fonctionnement.

OCK060056L

For Mexico

IFETEL : RCPMALR20-0336

"La operación de este equipo está sujeta a las siguientes dos condiciones:
(1) es posible que este equipo o dispositivo no cause interferencia perjudicial y
(2) este equipo o dispositivo debe aceptar cualquier interferencia, incluyendo la
que pueda causar su operación no deseada."
and RCPMALR20-0336

OCK060072L

The radio frequency components (Rear Corner Radar) complies:

For United States and United States territories

OYB060040L

This device complies with Part 15 of the FCC Rules. Operation is subject to the following two conditions:
(1) this device may not cause harmful interference, and
(2) this device must accept any interference received, including interference that may cause undesired operation.

CAUTION TO USERS
Changes or modifications not expressly approved by the party responsible for compliance could void the user`s authority to operate the equipment.

OYB060041L

For Canada

This Category II radiocommunication device complies with Industry Canada Standard RSS-310.
Ce dispositif de radiocommunication de catégorie II respecte la norme CNR-310 d'Industrie Canada .

This device complies with Industry Canada licence-exempt RSS standard(s). Operation is subject to the following two conditions:
(1) this device may not cause interference, and (2) this device must accept any interference, including interference that may cause undesired operation of the device.
Le présent appareil est conforme aux CNR d'Industrie Canada applicables aux appareils radio exempts de licence. L'exploitation est autorisée aux deux conditions suivantes :
(1) l'appareil ne doit pas produire de brouillage, et (2) l'utilisateur de l'appareil doit accepter tout brouillage radioélectrique subi, même si le brouillage est susceptible d'en compromettre le fonctionnement.

OCK060074L

For Mexico

IFETEL: RLVVAMB15-2026

"La operación de este equipo está sujeta a las siguientes dos condiciones:
(1) es posible que este equipo o dispositivo no cause interferencia perjudicial y (2) este equipo o dispositivo debe aceptar cualquier interferencia, incluyendo la que pueda causar su operación no deseada."

OCK060080L

Economical operation

Your vehicle's fuel economy depends mainly on your style of driving, where you drive and when you drive.

Each of these factors affects how many miles (kilometers) you can get from a gallon (liter) of fuel.To operate your vehicle as economically as possible, use the following driving suggestions to help save money in both fuel and repairs:

- Drive smoothly. Accelerate at a moderate rate. Don't make "jack-rabbit" starts or full-throttle shifts and maintain a steady cruising speed. Don't race between stoplights. Try to adjust your speed to the traffic so you don't have to change speeds unnecessarily. Avoid heavy traffic whenever possible. Always maintain a safe distance from other vehicles so you can avoid unnecessary braking. This also reduces brake wear.
- Drive at a moderate speed. The faster you drive, the more fuel your vehicle uses. Driving at a moderate speed, especially on the highway, is one of the most effective ways to reduce fuel consumption.
- Don't "ride" the brake pedal. This can increase fuel consumption and also increase wear on these components. In addition, driving with your foot resting on the

brake pedal may cause the brakes to overheat, which reduces their effectiveness and may lead to more serious consequences.

- Take care of your tires. Keep them inflated to the recommended pressure. Incorrect inflation, either too much or too little, results in unnecessary tire wear. Check the tire pressures at least once a month.
- Be sure that the wheels are aligned correctly. Improper alignment can result from hitting curbs or driving too fast over irregular surfaces. Poor alignment causes faster tire wear and may also result in other problems as well as greater fuel consumption.
- Keep your vehicle in good condition. For better fuel economy and reduced maintenance costs, maintain your vehicle in accordance with the maintenance schedule in section 7. If you drive your vehicle in severe conditions, more frequent maintenance is required (see section 7 for details).
- Keep your vehicle clean. For maximum service, your vehicle should be kept clean and free of corrosive materials. It is especially important that mud, dirt, ice, etc. not be allowed to accumulate on the underside of the vehicle. This extra weight can result in increased fuel consumption and also contribute to corrosion.
- Travel lightly. Don't carry unnecessary weight in your vehicle. Weight reduces fuel economy.
- Don't let the engine idle longer than necessary. If you are waiting (and not in traffic), turn off your engine and restart only when you're ready to go.
- Remember, your vehicle does not require extended warm-up. After the engine has started, allow the engine to run for 10 to 20 seconds prior to placing the vehicle in gear. In very cold weather, however, give your engine a slightly longer warmup period.
- Don't "lug" or "over-rev" the engine. Lugging is driving too slowly in a very high gear resulting in engine bucking. If this happens, shift to a lower gear. Over-revving is racing the engine beyond its safe limit. This can be avoided by shifting at the recommended speed.
- Use your air conditioning sparingly. The air conditioning system is operated by engine power so your fuel economy is reduced when you use it.
- Open windows at high speeds can reduce fuel economy.
- Fuel economy is less in crosswinds and headwinds. To help offset some of this loss, slow down when driving in these conditions.

Keeping a vehicle in good operating condition is important both for economy and safety. Therefore, have an authorized Kia dealer perform scheduled inspections and maintenance.

⚠ WARNING

Engine off during motion

Never turn the engine off to coast down hills or anytime the vehicle is in motion. The power steering and power brakes will not function properly without the engine running. In addition, turning off the ignition while driving could lead to out of working power driven steering wheel and hard to control steering wheel. Keep the engine on and downshift to an appropriate gear for an engine braking effect.

Special driving conditions

Hazardous driving conditions

When hazardous driving conditions are encountered such as water, snow, ice, mud, sand, or similar hazards, follow these suggestions:

- Drive cautiously and allow extra distance for braking.
- Avoid sudden braking or steering.
- When braking with non-ABS brakes pump the brake pedal with a light up-and-down motion until the vehicle is stopped.

Do not pump the brake pedal on a vehicle equipped with ABS.

- If stalled in snow, mud, or sand, use the second gear. Accelerate slowly to avoid spinning the drive wheels.
- Use sand, rock salt, or other non-slip material under the drive wheels to provide traction when stalled in ice, snow, or mud.

⚠ WARNING

Downshifting

Do not downshift with an automatic transmission while driving on slippery surfaces. The sudden change in tire speed could cause the tires to skid and result in an accident.

Rocking the vehicle

If it is necessary to rock the vehicle to free it from snow, sand, or mud, first turn the steering wheel right and left to clear the area around your front wheels. Then, shift back and forth between R (Reverse) and any forward gear in vehicles equipped with an Automatic Transmission. Do not race the engine, and spin the wheels as little as possible. If you are still stuck after a few tries, have the vehicle pulled out by a tow vehicle to avoid engine overheating and possible damage to the transmission.

⚠ WARNING

Sudden Vehicle Movement

Do not attempt to rock the vehicle if people or objects are nearby. The vehicle may suddenly move forward or backwards as it becomes unstuck.

⚠ CAUTION

Vehicle rocking

Prolonged rocking may cause engine overheating, transmission damage or failure, and tire damage.

⚠ CAUTION

Spinning tires

Do not spin the wheels, especially at speeds more than 35 mph (56 km/h). Spinning the wheels at high speeds when the vehicle is stationary could cause a tire to overheat which could result in tire damage that may injure bystanders.

The ESC system should be turned OFF prior to rocking the vehicle.

Smooth cornering

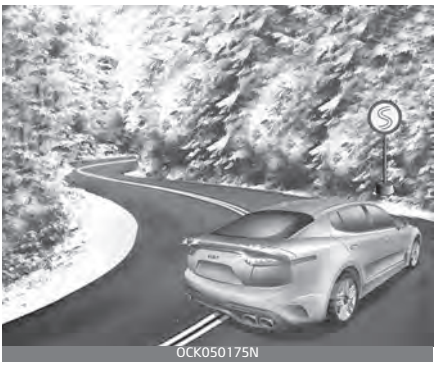

Avoid braking or gear changing in corners, especially when roads are wet. Ideally, corners should always be taken under gentle acceleration. If you follow these suggestions, tire wear will be held to a minimum.

Driving at night

Because night driving presents more hazards than driving in the daylight, here are some important tips to remember:

- Slow down and keep more distance between you and other vehicles, as it may be more difficult to see at night, especially in areas where there may not be any street lights.
- Adjust your mirrors to reduce the glare from other driver's headlights.
- Keep your headlights clean and properly aimed. (On vehicles not equipped with the automatic headlight aiming feature.) Dirty or improperly aimed headlights will make it much more difficult to see at night.
- Avoid staring directly at the headlights of oncoming vehicles. You could be temporarily blinded, and it will take several seconds for your eyes to readjust to the darkness.

Driving in the rain

Rain and wet roads can make driving dangerous, especially if you're not prepared for the slick pavement. Here are a few things to consider when driving in the rain:

- A heavy rainfall will make it harder to see and will increase the distance needed to stop your vehicle, so slow down.
- Keep your windshield wiping equipment in good shape. Replace your windshield wiper blades when they show signs of streaking or missing areas on the windshield.
- If your tires are not in good condition, making a quick stop on wet pavement can cause a skid and possibly lead to an accident. Be sure your tires are in good shape.
- Turn on your headlights to make it easier for others to see you.
- Driving too fast through large puddles can affect your brakes. If you must go through puddles, try to drive through them slowly.

- If you believe you may have gotten your brakes wet, apply them lightly while driving until normal braking operation returns.

Driving in flooded areas

Avoid driving through flooded areas unless you are sure the water is no higher than the bottom of the wheel hub. Drive through any water slowly. Allow adequate stopping distance because brake performance may be affected.

After driving through water, dry the brakes by gently applying them several times while the vehicle is moving slowly.

Driving off-road

Drive carefully off-road because your vehicle may be damaged by rocks or roots of trees. Become familiar with the off-road conditions where you are going to drive before you begin driving.

Highway driving

Tires

Adjust the tire inflation pressures to specification. Low tire inflation pressures will result in overheating and possible failure of the tires.

Avoid using worn or damaged tires which may result in reduced traction or tire failure.

Never exceed the maximum tire inflation pressure shown on the tires.

⚠ WARNING

Under/over inflated tires

Always check the tires for proper inflation before driving. Underinflated or overinflated tires can cause poor handling, loss of vehicle control, and sudden tire failure leading to accidents, injuries, and even death. For proper tire pressures, refer to "Tires and wheels" on page 8-4.

⚠ WARNING

Tire tread

Always check the tire tread before driving your vehicle. Worn-out tires can result in loss of vehicle control. Worn-out tires should be replaced as soon as possible. For further information and tread limits, refer to "Tires and wheels" on page 7-43.

Fuel, engine coolant and engine oil

High speed travel consumes more fuel than urban motoring. Do not forget to check both the engine coolant and engine oil.

Drive belt

A loose or damaged drive belt may result in overheating of the engine.

Winter driving

Severe weather conditions in the winter result in greater wear and other problems. To minimize the problems of winter driving, you should follow these suggestions:

⚠ WARNING

Driving with summer tires

Summer tires are equipped to provide the best driving performance on dry roads, varying according to specification.

Do not use summer tires at temperatures below 45°F (7°C) or when driving on snow or ice. At temperatures below 45°F (7°C), summer tires can lose elasticity, and therefore traction and braking power as well. Change the tires on your vehicle to winter or all-weather tires of the same size as the standard tires of the vehicle. Both types of tires are identified by the M+S (Mud and Snow) marking. Using summer tires at very cold temperatures could cause cracks to form, thereby damaging the tires permanently.

Snowy or icy conditions

To drive your vehicle in deep snow, it may be necessary to use snow tires or to install tire chains on your tires. If snow tires are needed, it is necessary to select tires equivalent in size

and type of the original equipment tires. Failure to do so may adversely affect the safety and handling of your vehicle. Furthermore, speeding, rapid acceleration, sudden brake applications, and sharp turns are potentially very hazardous practices.

During deceleration, use engine braking to the fullest extent. Sudden brake applications on snowy or icy roads may cause skids to occur. You need to keep sufficient distance between the vehicle in operation in front of your vehicle. Also, apply the brake gently. It should be noted that installing tire chains on the tire will provide a greater driving force, but will not prevent side skids.

Tire chains are not legal in all states. Check state laws before fitting tire chains.

Snow tires

If you mount snow tires on your vehicle, make sure they are radial tires of the same size and load range as the original tires. Mount snow tires on all four wheels to balance your vehicle’s handling in all weather conditions. Keep in mind that the traction provided by snow tires on dry roads may not be as high as your vehicle's original equipment tires.You should drive cautiously even when the roads are clear. Check with the tire dealer for maximum speed recommendations.

Do not install studded tires without first checking local, state and municipal regulations for possible restrictions against their use.

⚠ WARNING

Snow tire size

Snow tires should be equivalent in size and type to the vehicle's standard tires. Otherwise, the safety and handling of your vehicle may be adversely affected.

Tire chains

OCK050168

Since the sidewalls on some radial tires are thinner than other types of tires, they may be damaged by mounting certain types of tire chains on them. Therefore, the use of snow tires is recommended instead of tire chains. Do not mount tire chains on vehicles equipped with aluminum wheels; if unavoidable,

use AutoSock (fabric snow chain). Install the tire chain after reviewing the instructions provided with the tire chains.

Damage to your vehicle caused by improper tire chain use is not covered by your vehicle manufacturer’s warranty.

NOTICE

- Install AutoSock (fabric snow chain) on the rear tires for 2WD vehicles or for AWD vehicles. It should be noted that installing AutoSock (fabric snow chain) on the tires will provide a greater driving force, but will not prevent side skids.
- Do not install studded tires without first checking local and municipal regulations for possible restrictions against their use.

CAUTION

When using AutoSock (fabric snow chain):

- Wrong size chains or improperly installed chains can damage your vehicle's brake lines, suspension, body and wheels.
- To prevent body damage, retighten the chains after driving 0.3 ~ 0.6 miles (0.5 ~ 1.0 km).

NOTICE

If you hear noise caused by chains contacting the body, retighten the chain to prevent contact with the vehicle body.

Chain installation

When installing AutoSock (fabric snow chain), follow the manufacturer's instructions and mount them as tightly as possible. Drive slowly (less than 20 mph (30 km/h)) with chains installed. If you hear the chains contacting the body or chassis, stop and tighten them. If they still make contact, slow down until the noise stops.
Remove the AutoSock (fabric snow chain) as soon as you begin driving on cleared roads.
When mounting snow chains, park the vehicle on level ground away from traffic. Turn on the vehicle Hazard Warning flashers and place a triangular emergency warning device behind the vehicle if available. Always place the vehicle in P (Park), apply the parking brake and turn off the engine before installing snow chains.

- The use of chains may adversely affect vehicle handling.
- Do not exceed 20 mph (30 km/h) or the chain manufacturer’s recommended speed limit, whichever is lower.
- Drive carefully and avoid bumps, holes, sharp turns, and other road

hazards, which may cause the vehicle to bounce.
- Avoid sharp turns or locked-wheel braking.

⚠ CAUTION

Snow chains

- Chains that are the wrong size or improperly installed can damage your vehicle's brake lines, suspension, body and wheels.
- Stop driving and retighten the chains any time you hear them hitting the vehicle.

Use high quality ethylene glycol coolant

Your vehicle is delivered with high quality ethylene glycol coolant in the cooling system. It is the only type of coolant that should be used because it helps prevent corrosion in the cooling system, lubricates the water pump and prevents freezing. Be sure to replace or replenish your coolant in accordance with the maintenance schedule in section 7. Before winter, have your coolant tested to assure that its freezing point is sufficient for the temperatures anticipated during the winter.

Check battery and cables

Winter puts additional burdens on the battery system. Visually inspect the battery and cables as described in section 7. The level of charge in your battery can be checked by an authorized Kia dealer or a service station.

Change to "winter weight" oil if necessary

In some climates it is recommended that a lower viscosity "winter weight" oil be used during cold weather. Refer to "Recommended lubricants and capacities" on page 8-7. If you aren't sure what weight oil you should use, consult an authorized Kia dealer.

Check spark plugs and ignition system

Inspect your spark plugs as described in section 7 and replace them if necessary. Also check all ignition wiring and components to be sure they are not cracked, worn or damaged in any way.

To keep locks from freezing

To keep the locks from freezing, squirt an approved de-icer fluid or glycerine into the key opening. If a lock is covered with ice, squirt it with an approved de-icing fluid to remove the ice. If the lock is frozen inter-

nally, you may be able to thaw it out by using a heated key. Handle the heated key with care to avoid injury.

Use approved window washer anti-freeze in system

To keep the water in the window washer system from freezing, add an approved window washer anti-freeze solution in accordance with instructions on the container. Window washer anti-freeze is available from an authorized Kia dealer and most auto parts outlets. Do not use engine coolant or other types of anti-freeze as these may damage the paint finish.

Don’t let your parking brake freeze

Under some conditions your parking brake can freeze in the engaged position.This is most likely to happen when there is an accumulation of snow or ice around or near the rear brakes or if the brakes are wet. If there is a risk the parking brake may freeze, apply it only temporarily while you put the gear shift lever in P (Park, Automatic Transmission) and block the rear wheels so the vehicle cannot roll. Then release the parking brake.

Don't let ice and snow accumulate underneath

Under some conditions, snow and ice can build up under the fenders and interfere with the steering. When driving in severe winter conditions where this may happen, you should periodically check underneath the vehicle to be sure the movement of the front wheels and the steering components are not obstructed.

Carry emergency equipment

Depending on the severity of the weather, you should carry appropriate emergency equipment. Some of the items you may want to carry include tow straps or chains, flashlight, emergency flares, sand, shovel, jumper cables, window scraper, gloves, ground cloth, coveralls, blanket, etc.

TRAILER TOWING

We do not recommend using this vehicle for trailer towing.

Vehicle load limit

Tire and loading information label

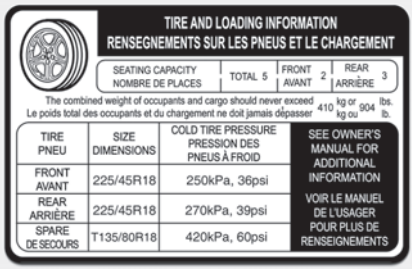

TIRE AND LOADING INFORMATION
RENSEGNEMENTS SUR LES PNEUS ET LE CHARGEMENT

SEATING CAPACITY / NOMBRE DE PLACES	TOTAL 5	FRONT / AVANT 2	REAR / ARRIÈRE 3

The combined weight of occupants and cargo should never exceed 410 kg or / kg ou 904 lbs. / lb.
Le poids total des occupants et du chargement ne doit jamais dépasser

TIRE / PNEU	SIZE / DIMENSIONS	COLD TIRE PRESSURE / PRESSION DES PNEUS À FROID	SEE OWNER'S MANUAL FOR ADDITIONAL INFORMATION / VOIR LE MANUEL DE L'USAGER POUR PLUS DE RENSEIGNEMENTS
FRONT / AVANT	225/45R18	250kPa, 36psi	
REAR / ARRIÈRE	225/45R18	270kPa, 39psi	
SPARE / DE SECOURS	T135/80R18	420kPa, 60psi	

OCK067038N

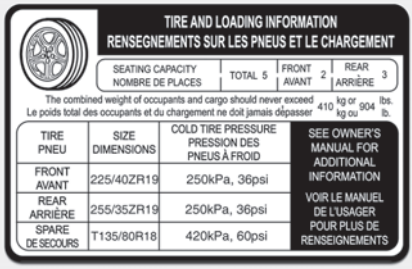

TIRE AND LOADING INFORMATION
RENSEGNEMENTS SUR LES PNEUS ET LE CHARGEMENT

SEATING CAPACITY / NOMBRE DE PLACES	TOTAL 5	FRONT / AVANT 2	REAR / ARRIÈRE 3

The combined weight of occupants and cargo should never exceed 410 kg or / kg ou 904 lbs. / lb.
Le poids total des occupants et du chargement ne doit jamais dépasser

TIRE / PNEU	SIZE / DIMENSIONS	COLD TIRE PRESSURE / PRESSION DES PNEUS À FROID	SEE OWNER'S MANUAL FOR ADDITIONAL INFORMATION / VOIR LE MANUEL DE L'USAGER POUR PLUS DE RENSEIGNEMENTS
FRONT / AVANT	225/40ZR19	250kPa, 36psi	
REAR / ARRIÈRE	255/35ZR19	250kPa, 36psi	
SPARE / DE SECOURS	T135/80R18	420kPa, 60psi	

OCK067039N

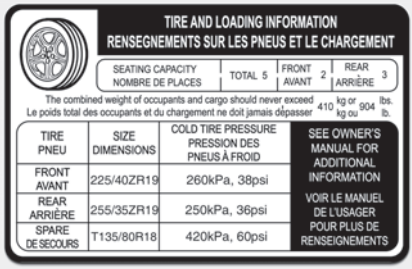

TIRE AND LOADING INFORMATION
RENSEGNEMENTS SUR LES PNEUS ET LE CHARGEMENT

SEATING CAPACITY / NOMBRE DE PLACES	TOTAL 5	FRONT / AVANT 2	REAR / ARRIÈRE 3

The combined weight of occupants and cargo should never exceed 410 kg or / kg ou 904 lbs. / lb.
Le poids total des occupants et du chargement ne doit jamais dépasser

TIRE / PNEU	SIZE / DIMENSIONS	COLD TIRE PRESSURE / PRESSION DES PNEUS À FROID	SEE OWNER'S MANUAL FOR ADDITIONAL INFORMATION / VOIR LE MANUEL DE L'USAGER POUR PLUS DE RENSEIGNEMENTS
FRONT / AVANT	225/40ZR19	260kPa, 38psi	
REAR / ARRIÈRE	255/35ZR19	250kPa, 36psi	
SPARE / DE SECOURS	T135/80R18	420kPa, 60psi	

OCK067040N

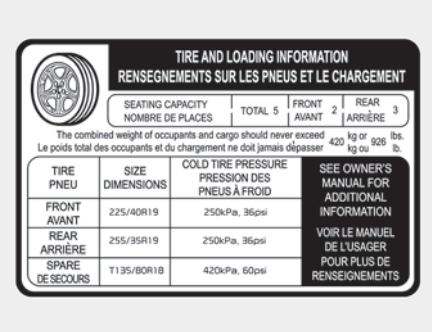

TIRE AND LOADING INFORMATION
RENSEGNEMENTS SUR LES PNEUS ET LE CHARGEMENT

SEATING CAPACITY NOMBRE DE PLACES	TOTAL 5	FRONT AVANT 2	REAR ARRIÈRE 3

The combined weight of occupants and cargo should never exceed 420 kg or 926 lbs.
Le poids total des occupants et du chargement ne doit jamais dépasser 420 kg ou 926 lb.

TIRE PNEU	SIZE DIMENSIONS	COLD TIRE PRESSURE PRESSION DES PNEUS À FROID	SEE OWNER'S MANUAL FOR ADDITIONAL INFORMATION VOIR LE MANUEL DE L'USAGER POUR PLUS DE RENSEIGNEMENTS
FRONT AVANT	225/40R19	250kPa, 36psi	
REAR ARRIÈRE	255/35R19	250kPa, 36psi	
SPARE DE SECOURS	T135/80R18	420kPa, 60psi	

OCK060045N

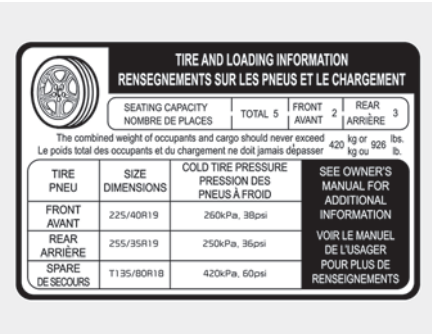

TIRE AND LOADING INFORMATION
RENSEGNEMENTS SUR LES PNEUS ET LE CHARGEMENT

SEATING CAPACITY NOMBRE DE PLACES	TOTAL 5	FRONT AVANT 2	REAR ARRIÈRE 3

The combined weight of occupants and cargo should never exceed 420 kg or 926 lbs.
Le poids total des occupants et du chargement ne doit jamais dépasser 420 kg ou 926 lb.

TIRE PNEU	SIZE DIMENSIONS	COLD TIRE PRESSURE PRESSION DES PNEUS À FROID	SEE OWNER'S MANUAL FOR ADDITIONAL INFORMATION VOIR LE MANUEL DE L'USAGER POUR PLUS DE RENSEIGNEMENTS
FRONT AVANT	225/40R19	260kPa, 38psi	
REAR ARRIÈRE	255/35R19	250kPa, 36psi	
SPARE DE SECOURS	T135/80R18	420kPa, 60psi	

OCK060046N

The label located on the driver's door sill gives the original tire size, cold tire pressures recommended for your vehicle, the number of people that can be in your vehicle and vehicle capacity weight.

Vehicle capacity weight:

904 lbs. (410 kg)

Vehicle capacity weight is the maximum combined weight of occupants and cargo. If your vehicle is equipped with a trailer, the combined weight includes the tongue load.

Seating capacity:

Total : 5 persons

(Front seat : 2 persons, Rear seat : 3 persons)

Seating capacity is the maximum number of occupants including a driver, your vehicle may carry.

However, the seating capacity may be reduced based upon the weight of all of the occupants, and the weight of the cargo being carried or towed.

Do not overload the vehicle as there is a limit to the total weight, or load limit including occupants and cargo, the vehicle can carry.

Towing capacity:

We do not recommend using this vehicle for trailer towing.

Cargo capacity:

The cargo capacity of your vehicle will increase or decrease depending on the weight and the number of occupants.

Steps for Determining Correct Load Limit –

(1) Locate the statement "The combined weight of occupants and cargo should never exceed XXX kg or XXX lbs." on your vehicle's placard.

(2) Determine the combined weight of the driver and passengers that will be riding in your vehicle.

(3) Subtract the combined weight of the driver and passengers from XXX kg or XXX lbs.

(4) The resulting figure equals the available amount of cargo and luggage load capacity. For example, if the "XXX" amount equals 1400 lbs. and there will be five 150 lb passengers in your vehicle, the amount of available cargo and luggage load capacity is 650 lbs.

(1400–750 (5 x 150) = 650 lbs.)

(5) Determine the combined weight of luggage and cargo being loaded on the vehicle. That weight may not safely exceed the available cargo and luggage load capacity calculated in Step 4.

(6) If your vehicle will be towing a trailer, load from your trailer will be transferred to your vehicle. Consult this manual to determine how this reduces the available cargo and luggage load capacity of your vehicle.

WARNING

Loose cargo

Do not travel with unsecured blunt objects in the passenger compartment of your vehicle (e.g. suit cases or unsecured child seats). These items may strike occupant during a sudden stop or crash.

Example 1

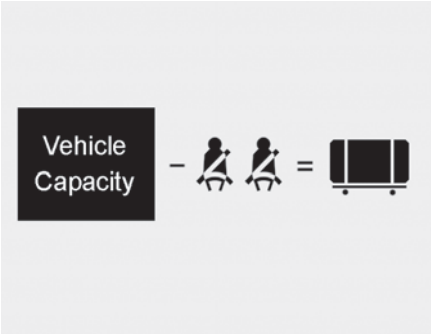

C190F01JM

Item	Description	Total
A	Vehicle Capacity Weight	849 lbs (385 kg)
B	Subtract Occupant Weight 150 lbs (68 kg) × 2	300 lbs (136 kg)
C	Available Cargo and Luggage weight	549 lbs (249 kg)

Example 2

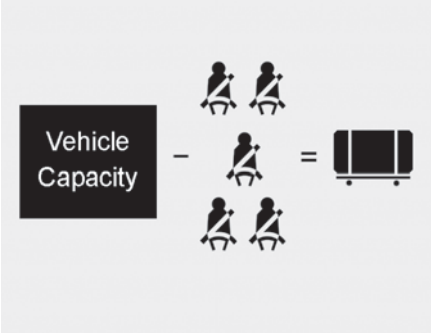

C190F02JM

Item	Description	Total
A	Vehicle Capacity Weight	849 lbs (385 kg)
B	Subtract Occupant Weight 150 lbs (68 kg) × 5	750 lbs (340 kg)
C	Available Cargo and Luggage weight	99 lbs (45 kg)

Example 3

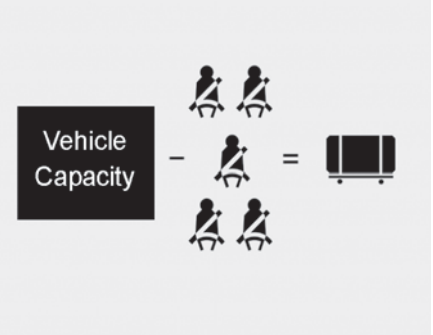

C190F03JM

Item	Description	Total
A	Vehicle Capacity Weight	849 lbs (385 kg)
B	Subtract Occupant Weight 161 lbs (73 kg) × 5	805 lbs (365 kg)
C	Available Cargo and Luggage weight	44 lbs (20 kg)

Refer to your vehicle’s tire and loading information label for specific information about your vehicle's capacity weight and seating positions. The combined weight of the driver, passengers and cargo should never exceed your vehicle's capacity weight.

Certification label

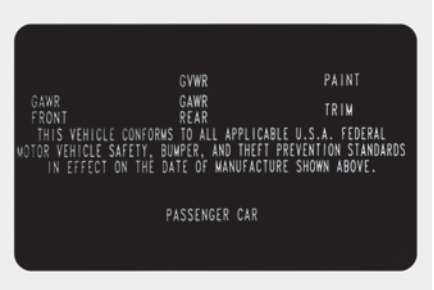

OJFA055280

The certification label is located on the driver's door sill at the center pillar.

This label shows the maximum allowable weight of the fully loaded vehicle. This is called the GVWR (Gross Vehicle Weight Rating). The GVWR includes the weight of the vehicle, all occupants, fuel and cargo.

This label also tells you the maximum weight that can be supported by the front and rear axles, called Gross Axle Weight Rating (GAWR).

To find out the actual loads on your front and rear axles, you need to go to a weigh station and weigh your vehicle.Your dealer can help you with this. Be sure to spread out your load equally on both sides of the centerline.

⚠ WARNING

Over loading

Never exceed the GVWR for your vehicle, the GAWR for either the front or rear axle and vehicle capacity weight. Exceeding these ratings can affect your vehicle's handling and braking ability.

The label will help you decide how much cargo and installed equipment your vehicle can carry.

If you carry items inside your vehicle – like suitcases, tools, packages, or anything else – they are moving as fast as the vehicle. If you have to stop or turn quickly, or if there is a crash, the items will keep going and can cause an injury if they strike the driver or a passenger.

⚠ WARNING

Over loading

Do not overload your vehicle. Overloading your vehicle can cause heat buildup in your vehicle's tires and possible tire failure, increased stopping distances and poor vehicle handling--all of which may result in a crash.

✻ NOTICE

Overloading your vehicle may cause damage. Repairs would not be covered by your warranty. Do not overload your vehicle.

Vehicle weight

This section will guide you in the proper loading of your vehicle and/or trailer, to keep your loaded vehicle weight within its design rating capability, with or without a trailer. Properly loading your vehicle will provide maximum return of the vehicle design performance. Before loading your vehicle, familiarize yourself with the following terms for determining your vehicle's weight ratings, with or without a trailer, from the vehicle's specifications and the compliance label:

Base curb weight

This is the weight of the vehicle including a full tank of fuel and all standard equipment. It does not include passengers, cargo, or optional equipment.

Vehicle curb weight

This is the weight of your new vehicle when you picked it up from your dealer plus any aftermarket equipment.

Cargo weight

This figure includes all weight added to the Base Curb Weight, including cargo and optional equipment.

GAW (Gross axle weight)

This is the total weight placed on each axle (front and rear) – including vehicle curb weight and all payload.

GAWR (Gross axle weight rating)

This is the maximum allowable weight that can be carried by a single axle (front or rear). These numbers are shown on the compliance label. The total load on each axle must never exceed its GAWR.

GVW (Gross vehicle weight)

This is the Base Curb Weight plus actual Cargo Weight plus passengers.

GVWR (Gross vehicle weight rating)

This is the maximum allowable weight of the fully loaded vehicle (including all options, equipment, passengers and cargo). The GVWR is shown on the certification label located on the driver’s door sill.

What to do in an emergency 6

Road warning **6-3**
• Hazard warning flasher 6-3
In case of an emergency while driving **6-4**
• If the engine stalls at a crossroad or crossing 6-4
• If you have a flat tire while driving 6-4
• If the engine stalls while driving 6-4
If the engine will not start **6-5**
• If engine doesn't turn over or turns over slowly 6-5
• If engine turns over normally but does not start 6-5
Emergency starting **6-6**
• Jump starting 6-6
• Push-starting 6-7
If the engine overheats **6-8**
Tire Pressure Monitoring System (TPMS) **6-10**
• Check tire pressure 6-10
• Low tire pressure telltale 6-12
• TPMS (Tire Pressure Monitoring System) malfunction indicator 6-13
• Changing a tire with TPMS 6-13
If you have a flat tire (with spare tire) **6-15**
• Jack and tools 6-15
• Removing and storing the spare tire 6-16
• Changing tires 6-17
• Jack label 6-23
If you have a flat tire (with Tire Mobility Kit) **6-25**
• Introduction 6-26
• Notes on the safe use of the Tire Mobility Kit 6-27
• Components of the Tire Mobility Kit (TMK) 6-28

6 What to do in an emergency

• Using the Tire Mobility Kit 6-29
• Distributing the sealant.....6-31
• Checking the tire inflation pressure 6-31
• Technical Data 6-32
Towing.....6-32
• Towing service.....6-32
• Removable towing hook 6-34
• Emergency towing 6-34

What to do in an emergency

Road warning

Hazard warning flasher

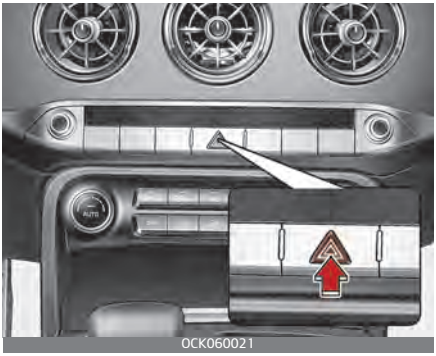

The hazard warning flasher serves as a warning to other drivers to exercise extreme caution when approaching, overtaking, or passing your vehicle.

It should be used whenever emergency repairs are being made or when the vehicle is stopped near the edge of a roadway.

Depress the flasher switch with the ENGINE START/STOP button in any position. The flasher switch is located in the center facia panel. All turn signal lights will flash simultaneously.

- The hazard warning flasher operates whether your vehicle is running or not.
- The turn signals do not work when the hazard flasher is on.
- Care must be taken when using the hazard warning flasher while the vehicle is being towed.

In case of an emergency while driving

If the engine stalls at a crossroad or crossing

If the engine stalls at a crossroad or crossing, set the shift lever in the N (Neutral) position and then push the vehicle to a safe place.

If you have a flat tire while driving

1. Take your foot off the accelerator pedal and let the vehicle slow down while driving straight ahead. Do not apply the brakes immediately or attempt to pull off the road as this may cause a loss of control. When the vehicle has slowed to such a speed that it is safe to do so, brake carefully and pull off the road. Drive off the road as far as possible and park on firm level ground. If you are on a divided highway, do not park in the median area between the two traffic lanes.
2. When the vehicle is stopped, turn on your emergency hazard flashers, set the parking brake and put the transmission in P.
3. Have all passengers get out of the vehicle. Be sure they all get out on the side of the vehicle that is away from traffic.
4. When changing a flat tire, follow the instruction provided later in this section.

If the engine stalls while driving

1. Reduce your speed gradually, keeping a straight line. Move cautiously off the road to a safe place.
2. Turn on your emergency flashers.
3. Try to start the engine again. If your vehicle will not start, contact an authorized Kia dealer or seek other qualified assistance.

NOTICE

If there was a check engine light and loss of power or stall and if safe to do so, wait at least 10 seconds to restart the vehicle after it stalls. This may reset the car so it will no longer run at low power (limp home) condition.

If the engine will not start

If engine doesn't turn over or turns over slowly

1. Be sure the shift lever is in N (Neutral) or P (Park) and the emergency brake is set.
2. Check the battery connections to be sure they are clean and tight.
3. Turn on the interior light. If the light dims or goes out when you operate the starter, the battery is discharged.
4. Check the starter connections to be sure they are securely tightened.
5. Do not push or pull the vehicle to start it. Refer to "Jump starting" on page 6-6.

⚠ WARNING

Push/pull start

Do not push or pull the vehicle to start it. Push or pull starting may cause the catalytic converter to overload and create a fire hazard.

If engine turns over normally but does not start

1. Check the fuel level.
2. With the ENGINE START/STOP button in the OFF position, check all connectors at the ignition coils and spark plugs. Reconnect any that may be disconnected or loose.
3. Check the fuel line in the engine compartment.
4. If the engine still does not start, call an authorized Kia dealer or seek other qualified assistance.

Emergency starting

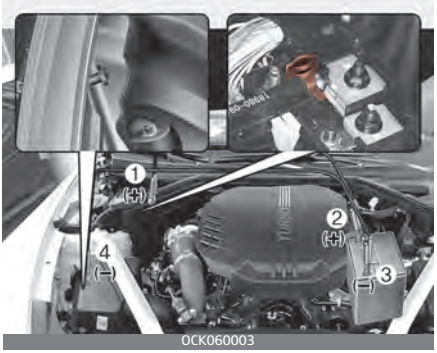

Connect cables in numerical order and disconnect in reverse order.

Jump starting

Jump starting can be dangerous if done incorrectly. Therefore, to avoid harm to yourself or damage to your vehicle or battery, follow these jump starting procedures. If in doubt, we strongly recommend that you have a competent technician or towing service jump start your vehicle.

⚠ CAUTION

Push/pull start to 12 Volt Battery

Use only a 12-volt jumper system. You can damage a 12-volt starting motor, ignition system, and other electrical parts beyond repair by use of a 24-volt power supply (either two 12-volt batteries in series or a 24-volt motor generator set).

⚠ WARNING

Battery

Never attempt to check the electrolyte level of the battery as this may cause the battery to rupture or explode.

⚠ WARNING

Frozen batteries

Do not attempt to jump start the vehicle if the discharged battery is frozen or if the electrolyte level is low as the battery may rupture or explode.

⚠ WARNING

Battery

Keep all flames or sparks away from the battery. The battery produces hydrogen gas which will explode if exposed to flame or sparks.

⚠ WARNING

Sulfuric acid risk

When jump starting your vehicle, be careful not to get acid on yourself, your clothing or on the vehicle. Automobile batteries contain sulfuric acid.This is poisonous and highly corrosive.

Jump starting procedure

1. Make sure the booster battery is 12-volt and that its negative terminal is grounded.
2. If the booster battery is in another vehicle, do not allow the vehicles to come in contact.
3. Turn off all unnecessary electrical loads.
4. Connect the jumper cables in the exact sequence shown in the illustration. First connect one end of a jumper cable to the positive terminal of the discharged battery (1), then connect the other end to the positive terminal of the booster battery (2).
   Proceed to connect one end of the other jumper cable to the negative terminal of the booster battery (3), then the other end to a solid, stationary, metallic point (for example, the engine lifting bracket) away from the battery (4). Do not connect it to or near any part that moves when the engine is cranked.
   Do not allow the jumper cables to contact anything except the correct battery terminals or the correct ground. Do not lean over the battery when making connections.

⚠ WARNING

Battery cables

Do not connect the jumper cable from the negative terminal of the booster battery to the negative terminal of the discharged battery. This can cause the discharged battery to overheat and crack, releasing battery acid.

Make sure to connect one end of the jumper cable to the negative terminal of the booster battery, and the other end to a metalic point, far away from the battery.

5. Start the engine of the vehicle with the booster battery and let it run at 2,000 rpm, then start the engine of the vehicle with the discharged battery.

If the cause of your battery discharging is not apparent, you should have your vehicle checked by an authorized Kia dealer.

Push-starting

Vehicles equipped with automatic transmission lock system cannot be push-started.

Follow the directions in this section for jump-starting.

⚠ WARNING

Tow starting vehicle

Never tow a vehicle to start it. When the engine starts, the vehicle can suddenly surge forward and could cause a collision with the tow vehicle.

If the engine overheats

If your temperature gauge indicates overheating, you experience a loss of power, or hear loud pinging or knocking, the engine will probably be too hot. If this happens, you should:

1. Pull off the road and stop as soon as it is safe to do so.
2. Place the shift lever in P and set the parking brake. If the air conditioning is on, turn it off.
3. If engine coolant is running out under the vehicle or steam is coming out from underneath the hood, stop the engine. Do not open the hood until the coolant has stopped running or the steaming has stopped. If there is no visible loss of engine coolant and no steam, leave the engine running and check to be sure the engine cooling fan is operating. If the fan is not running, turn the engine off.
4. Check to see if the water pump drive belt is missing. If it is not missing, check to see that it is tight. If the drive belt seems to be satisfactory, check for coolant leaking from the radiator, hoses or under the vehicle. (If the air conditioning had been in use, it is normal for cold water to be draining from it when you stop).

⚠ WARNING

Under the hood

While the engine is running, keep hair, hands and clothing away from moving parts such as the fan and drive belts to prevent injury.

5. If the water pump drive belt is broken or engine coolant is leaking out, stop the engine immediately and call the nearest authorized Kia dealer for assistance.

⚠ WARNING

Radiator cap

Do not remove the radiator cap when the engine is hot.This may result in coolant being blown out of the opening and cause serious burns.

6. If you cannot find the cause of the overheating, wait until the engine temperature has returned to normal. If coolant has been lost, carefully add coolant to the reservoir to bring the fluid level in the reservoir up to the halfway mark.
7. Proceed with caution, keeping alert for further signs of overheating. If overheating happens again, call an authorized Kia dealer for assistance.

Serious loss of coolant indicates there is a leak in the cooling system and this should be checked as soon as possible by an authorized Kia dealer.

Tire Pressure Monitoring System (TPMS)

1. Low tire pressure telltale/TPMS malfunction indicator

OCK060100N

2. Low tire pressure position telltale (Shown on the LCD display)

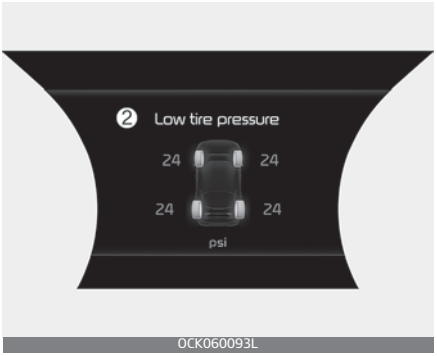

OCK060093L

Check tire pressure

- You can check the tire pressure in the information mode on the cluster.
  - Refer to "User settings mode (if equipped)" on page 4-79.
- Tire pressure is displayed 1~2 minutes later after driving.
- If tire pressure is not displayed when the vehicle is stopped, “Drive to display” message displays. After driving, check the tire pressure.
- You can change the tire pressure unit in the user settings mode on the cluster.
  - psi, kpa, bar (Refer to "User settings mode (if equipped)" on page 4-79.)

NOTICE

- The tire pressure may change due to factors such as parking condition, driving style, and altitude above sea level.
- Low tire pressure warning may sound when a tire’s pressure unit is equal or higher than nearby tires. This is a normal occurrence, which is due to the change in tire pressure along with tire temperature.
- The tire pressure shown on the dashboard may differ from the tire pressure measured by tire pressure gauge.

Each tire, including the spare (if provided), should be checked monthly when cold and inflated to the inflation pressure recommended by the vehicle manufacturer on the vehicle placard or tire inflation pressure label. (If your vehicle has tires of a different size than the size indicated

on the vehicle placard or tire inflation pressure label, you should determine the proper tire inflation pressure for those tires.)

As an added safety feature, your vehicle has been equipped with a tire pressure monitoring system (TPMS) that illuminates a low tire pressure telltale when one or more of your tires is significantly under-inflated. Accordingly, when the low tire pressure telltale illuminates, you should stop and check your tires as soon as possible, and inflate them to the proper pressure. Driving on a significantly under-inflated tire causes the tire to overheat and can lead to tire failure. Under-inflation also reduces fuel efficiency and tire tread life, and may affect the vehicle's handling and stopping ability.

Please note that the TPMS is not a substitute for proper tire maintenance, and it is the driver's responsibility to maintain correct tire pressure, even if under-inflation has not reached the level to trigger illumination of the TPMS low tire pressure telltale.

Your vehicle has also been equipped with a TPMS malfunction indicator to indicate when the system is not operating properly. The TPMS malfunction indicator is combined with the low tire pressure telltale. When the system detects a malfunction, the telltale will flash for approximately one minute and then remain continuously illuminated. This sequence will continue upon subsequent vehicle start-ups as long as the malfunction exists. When the malfunction indicator is illuminated, the system may not be able to detect or signal low tire pressure as intended. TPMS malfunctions may occur for a variety of reasons, including the installation of replacement or alternate tires or wheels on the vehicle that prevent the TPMS from functioning properly.

Always check the TPMS malfunction telltale after replacing one or more tires or wheels on your vehicle to ensure that the replacement or alternate tires and wheels allow the TPMS to continue to function properly.

NOTICE

If the TPMS, Low Tire Pressure indicator does not illuminate for 3 seconds when the ENGINE START/STOP button is turned to the ON, or engine is running, or if they remain illuminated after coming on for approximately 3 seconds, take your vehicle to your nearest authorized Kia dealer and have the system checked.

Low tire pressure telltale

Low tire pressure position information

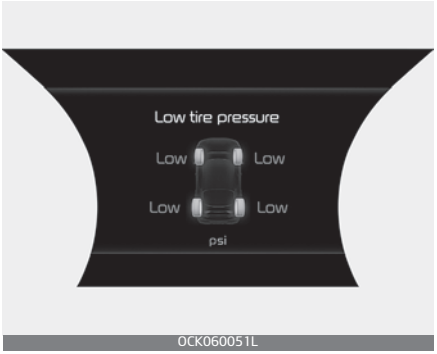

When the tire pressure monitoring system warning indicators are illuminated, one or more of your tires is significantly under-inflated.

If the telltale illuminates, immediately reduce your speed, avoid hard cornering and anticipate increased stopping distances. You should stop and check your tires as soon as possible.

Inflate the tires to the proper pressure as indicated on the vehicle's placard or tire inflation pressure label located on the driver's side center pillar outer panel. If you cannot reach a service station or if the tire cannot hold the newly added air, replace the low pressure tire with the spare tire.

Then the TPMS malfunction indicator and the Low Tire Pressure telltale may turn on and illuminate after restarting and about 20 minutes of continuous driving before you have the low pressure tire repaired and replaced on the vehicle.

In winter or cold weather, the low tire pressure telltale may be illuminated if the tire pressure was adjusted to the recommended tire inflation pressure in warm weather. It does not mean your TPMS is malfunctioning because the decreased temperature leads to a proportional lowering of tire pressure.

When you drive your vehicle from a warm area to a cold area or from a cold area to a warm area, or the outside temperature is greatly higher or lower, you should check the tire inflation pressure and adjust the tires to the recommended tire inflation pressure.

When filling tires with more air, conditions to turn off the low tire pressure telltale may not be met. This is because a tire inflator has a margin of error in performance. The low tire pressure telltale will be turned off if the tire pressure is above the recommended tire inflation pressure.

⚠ WARNING

Low pressure damage

Do not drive on low pressure tires. Significantly low tire pressure can cause the tires to overheat and fail making the vehicle unstable resulting in increased braking distances and a loss of vehicle control.

TPMS (Tire Pressure Monitoring System) malfunction indicator

The low tire pressure telltale will illuminate after it blinks for approximately one minute when there is a problem with the Tire Pressure Monitoring System. If the system is able to correctly detect an underinflation warning at the same time as system failure then it will illuminate both the TPMS malfunction and low tire pressure position telltales e.g. if Front Left sensor fails, the TPMS malfunction indicator illuminates, but if the Front Right, Rear Left, or Rear Right tire is under-inflated, the low tire pressure position telltales may illuminate together with the TPMS malfunction indicator.

Have the system checked by an authorized Kia dealer as soon as possible to determine the cause of the problem.

- The TPMS malfunction indicator may be illuminated if the vehicle is moving around electric power supply cables or radios transmitters such as at police stations, government and public offices, broadcasting stations, military installations, airports, or transmitting towers, etc. This can interfere with normal operation of the Tire Pressure Monitoring System (TPMS).
- The TPMS malfunction indicator may be illuminated if snow chains are used or some separate electronic devices such as notebook computer, mobile charger, remote starter or navigation etc., are used in the vehicle. This can interfere with normal operation of the Tire Pressure Monitoring System (TPMS).

Changing a tire with TPMS

If you have a flat tire, the Low Tire Pressure telltale will come on. Have the flat tire repaired by an authorized Kia dealer as soon as possible or replace the flat tire with the spare tire.

⚠ CAUTION

Repair Agents

Never use a puncture-repairing agent not approved by Kia to repair and/or inflate a low pressure tire. The sealant not approved by Kia may damage the tire pressure sensor.

Each wheel is equipped with a tire pressure sensor mounted inside the tire behind the valve stem. You must use TPMS specific wheels. It is recommended that you always have your tires serviced by an authorized Kia dealer.

Even if you replace the low pressure tire with the spare tire, the Low Tire Pressure telltale will remain on until the low pressure tire is repaired and placed on the vehicle.

After you replace the low pressure tire with the spare tire, the TPMS malfunction indicator may illuminate after a few minutes because the TPMS sensor mounted on the spare wheel is not initiated.

Once the low pressure tire is inflated again to the recommended pressure and installed on the vehicle or the TPMS sensor mounted on the replaced spare wheel is initiated by an authorized Kia dealer, the TPMS malfunction indicator and the low tire pressure telltale will turn off within a few minutes of driving.

If the indicator has not disappeared after a few minutes of driving, please visit an authorized Kia dealer.

If an original mounted tire is replaced with the spare tire, the TPMS sensor on the replaced spare wheel should be initiated and the TPMS sensor on the original mounted wheel should be deactivated. If the TPMS sensor on the original mounted wheel located in the spare tire carrier still activates, the tire pressure monitoring system may not operate properly. Have the tire with TPMS serviced or replaced by an authorized Kia dealer.

You may not be able to identify a low tire by simply looking at it. Always use a good quality tire pressure gauge to measure the tire's inflation pressure. Please note that a tire that is hot (from being driven) will have a higher pressure measurement than a tire that is cold (from sitting stationary for at least 3 hours and driven less than 1 mile (1.6 km) during that 3 hour period).

Allow the tire to cool before measuring the inflation pressure. Always be sure the tire is cold before inflating to the recommended pressure.

A cold tire means the vehicle has been sitting for 3 hours and driven for less than 1 mile (1.6 km) in that 3 hour period.

Never use tire sealant if your vehicle is equipped with a Tire Pressure Monitoring System. The liquid sealant not approved by Kia may damage the tire pressure sensors.

- The TPMS cannot alert you to severe and sudden tire damage caused by external factors such as nails or road debris.

- If you feel any vehicle instability, immediately take your foot off the accelerator, apply the brakes gradually and with light force, and slowly move to a safe position off the road.

NOTICE

Protecting TPMS

Tampering with, modifying, or disabling the Tire Pressure Monitoring System (TPMS) components may interfere with the system's ability to warn the driver of low tire pressure conditions and/or TPMS malfunctions. Tampering with, modifying, or disabling the Tire Pressure Monitoring System (TPMS) components may void the warranty for that portion of the vehicle.

This device complies with Part 15 of the FCC rules.

Operation is subject to the following two conditions:

1. This device may not cause harmful interference, and
2. This device must accept any interference received, including interference that may cause undesired operation.

If you have a flat tire (with spare tire)

Jack and tools

The jack and wheel lug nut wrench are stored in the luggage compartment.

Remove the panel indicated in the illustration.

1. Jack handle
2. Jack
3. Wheel lug nut wrench

Jacking instructions

The jack is provided for emergency tire changing only.

To prevent the jack from “rattling” while the vehicle is in motion, store it properly.

Follow jacking instructions to reduce the possibility of personal injury.

⚠ WARNING

Tire Jack

Do not place any portion of your body under a vehicle that is only supported by a jack since the vehicle can easily roll off the jack. Use vehicle support stands.

⚠ WARNING

Changing tires

Never attempt vehicle repairs in the traffic lanes of a public road or highway.

- Always move the vehicle completely off the road and onto the shoulder before trying to change a tire. The jack should be used on a firm level ground. If you cannot find a firm, level place off the road, call a towing service company for assistance.
- Be sure to use the correct front and rear jacking positions on the vehicle; never use the bumpers or any other part of the vehicle for jack support.
- Do not allow anyone to remain in the vehicle while it is on the jack.
- Make sure any children present are in a secure place away from the road and from the vehicle to be raised with the jack.

⚠ WARNING

Running vehicle on jack

Do not start or run the engine of the vehicle while the vehicle is on the jack as this may cause the vehicle to fall off the jack.

Removing and storing the spare tire

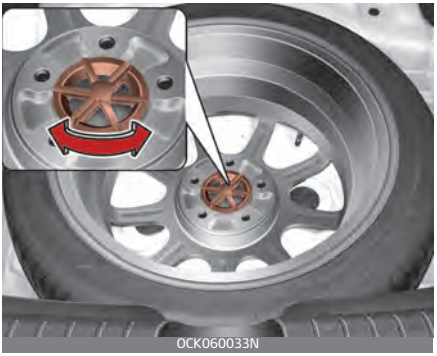

Turn the tire hold-down wing bolt counterclockwise.

Store the tire in the reverse order of removal.

To prevent the spare tire and tools from “rattling” while the vehicle is in motion, store them properly.

OCK060034N

If it is hard to loosen the tire hold-down wing bolt by hand, you can loosen it easily using the jack handle.

1. Put the jack handle (1) inside of the tire hold-down wing bolt.
2. Turn the tire hold-down wing bolt counterclockwise with the jack handle.

Use caution when utilizing the sharp jack handle.

WARNING

Touching luggage room floor surface

OCK070088L

Do not touch luggage room metal surface while the engine is operating or hot. Doing so could result in serious personal injury.

Turn the engine off and wait until it cools down or wear gloves to remove the spare tire from the luggage room.

Changing tires

1. Park on a level surface and apply the parking brake firmly.
2. Place the transmission shift lever in P (Park).
3. Activate the hazard warning flashers.

OCK060044N

4. Remove the wheel lug nut wrench, jack and spare tire from the vehicle.
5. Block both the front and rear of the wheel that is diagonally opposite from the jack position.

OCK060054N

WARNING

Jack location

To reduce the possibility of injury, be sure to use only the jack provided with the vehicle in the correct jack position; never use any other part of the vehicle for jack support.

WARNING

Changing a tire

- To prevent vehicle movement while changing a tire, always set the parking brake fully, and always block the wheel diagonally opposite the wheel being changed.
- We recommend that the wheels of the vehicle be blocked, and that no person remain in a vehicle that is being jacked.

6. Loosen the wheel lug nuts counterclockwise one turn each, but do not remove any nut until the tire has been raised off the ground.

OCK060026N

7. Place the jack at the front (1) or rear (2) jacking position closest to the tire you are changing. Place the jack at the designated locations under the frame. The jacking positions are plates welded to the frame with two tabs and a raised dot to line up with the jack.

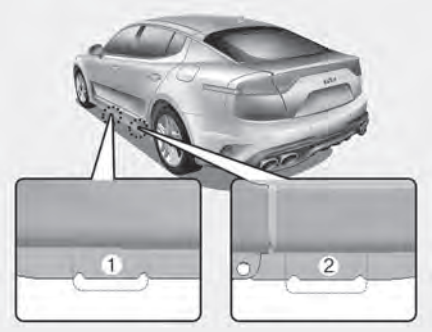

OCK060027N

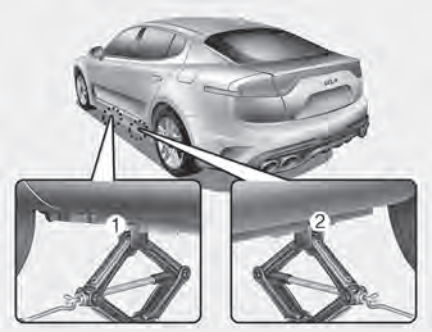

OCK060028N

8. Insert the wheel lug nut wrench into the jack and turn it clockwise, raising the vehicle until the tire just clears the ground. This measurement is approximately 1 in (30 mm).
   Before removing the wheel lug nuts, make sure the vehicle is stable and that there is no chance for movement or slippage.

OCK060029N

9. Loosen the wheel nuts and remove them with your fingers. Slide the wheel off the studs and lay it flat so it cannot roll away. To put the wheel on the hub, pick up the spare tire, line up the holes with the studs and slide the wheel onto them. If this is difficult, tip the wheel slightly and get the top hole in the wheel lined up with the top stud. Jiggle the wheel back and forth until the wheel can slide over the other studs.
   Wheels may have sharp edges. Handle them carefully to avoid possible severe injury. Before putting the wheel into place, be sure that there is nothing on the hub or wheel (such as mud, tar, gravel, etc.) that prevents the wheel from fitting solidly against the hub.

⚠ WARNING

Installing a wheel

Make sure the wheel makes good contact with the hub when installed. If the contact of the mounting surface between the wheel and hub is not good, the wheel nuts could come loose and cause the loss of a wheel. Loss of a wheel may result in loss of control of the vehicle.

10. To install the wheel, hold it on the studs, put the wheel nuts on the studs and tighten them finger tight. Jiggle the tire to be sure it is completely seated, then tighten the nuts as much as possible with your fingers again.
11. Insert the wrench into the jack and lower the vehicle to the ground by turning the wheel nut wrench counterclockwise.

Position the wrench as shown in the drawing and tighten the wheel nuts. Be sure the socket is seated completely over the nut. Do not stand on the wrench handle or use an extension pipe over the wrench handle. Go around the wheel, tightening every nut following the numerical sequence shown in the image until they are all tight. Double-check each nut for tightness. After changing wheels, have an authorized Kia dealer tighten the wheel nuts to their proper torque as soon as possible.

Wheel nut tightening torque:

79~94 lbf·ft

(11~13 kgf·m, 107~127 N·m)

If you have a tire gauge, remove the valve cap and check the air pressure. If the pressure is lower than recommended, drive slowly to the nearest service station and inflate to the correct pressure. If it is too high, adjust it until it is correct. Always reinstall the valve cap after checking or adjusting the tire pressure. If the cap is not replaced, dust and dirt may get into the tire valve and air may leak from the tire. If you lose a valve cap, buy another and install it as soon as possible.

After you have changed the wheels, always secure the flat tire in its place and return the jack and tools to their proper storage locations.

⚠ CAUTION

Reusing lug nuts

Make certain during wheel removal that the same nuts that were removed are reinstalled – or, if replaced, that nuts with metric threads and the same chamfer configuration are used. Your vehicle has metric threads on the wheel studs and nuts. Installation of a non-metric thread nut on a metric stud will not secure the wheel to the hub properly and will damage the stud so that it must be replaced.

Note that most lug nuts do not have metric threads. Be sure to use extreme care in checking for thread style before installing aftermarket lug nuts or wheels. If in doubt, consult an authorized Kia dealer.

⚠ WARNING

Wheel studs

If the studs are damaged, they may lose their ability to retain the wheel.This could lead to the loss of the wheel and a collision resulting in serious injuries.

To prevent the jack, wheel lug nut wrench and spare tire from rattling while the vehicle is in motion, store them properly.

Check the inflation pressures as soon as possible after installing the spare tire. Adjust it to the specified pressure, if necessary. Refer to "Tires and wheels" on page 7-43.

Important – use of compact spare tire

Your vehicle is equipped with a compact spare tire. This compact spare tire takes up less space than a regular-size tire. This tire is smaller than a conventional tire and is designed for temporary use only.

- You should drive carefully when the compact spare is in use. The compact spare should be replaced by the proper conventional tire and rim at the first opportunity.
- The operation of this vehicle is not recommended with more than one compact spare tire in use at the same time.

⚠ WARNING

Spare tire

The compact spare tire is for emergency use only. Do not operate your vehicle on this compact spare at speeds over 50 mph (80 km/h). The original tire should be repaired or replaced as soon as possible to avoid failure of the spare possibly leading to personal injury or death.

The compact spare should be inflated to 60 psi (420 kPa).

✻ NOTICE

Check the inflation pressure after installing the spare tire. Adjust it to the specified pressure, as necessary.

When using a compact spare tire, observe the following precautions:

- Under no circumstances should you exceed 50 mph (80 km/h); a higher speed could damage the tire.
- Ensure that you drive slowly enough for the road conditions to avoid all hazards. Any road hazard, such as a pothole or debris, could seriously damage the compact spare.
- Any continuous road use of this tire could result in tire failure, loss of vehicle control, and possible personal injury.
- Do not exceed the vehicle's maximum load rating or the load-carrying capacity shown on the sidewall of the compact spare tire.
- Avoid driving over obstacles. The compact spare tire diameter is smaller than the diameter of a conventional tire and reduces the ground clearance approximately 1 inch (25 mm), which could result in damage to the vehicle.
- Do not take this vehicle through an automatic vehicle wash while the compact spare tire is installed.
- Do not use tire chains on the compact spare tire. Because of the smaller size, a tire chain will not fit properly. This could damage the vehicle and result in loss of the chain.
- Do not use the compact spare tire on any other vehicle because this tire has been designed especially for your vehicle.
- The compact spare tire's tread life is shorter than a regular tire. Inspect your compact spare tire regularly and replace worn compact spare tires with the same size and design, mounted on the same wheel.
- The compact spare tire should not be used on any other wheels, nor should standard tires, snow tires, wheel covers or trim rings be used with the compact spare wheel. If such use is attempted, damage to these items or other vehicle components may occur.
- Do not use more than one compact spare tire at a time.
- Do not tow a trailer while the compact spare tire is installed.

Jack label

Example

Type A

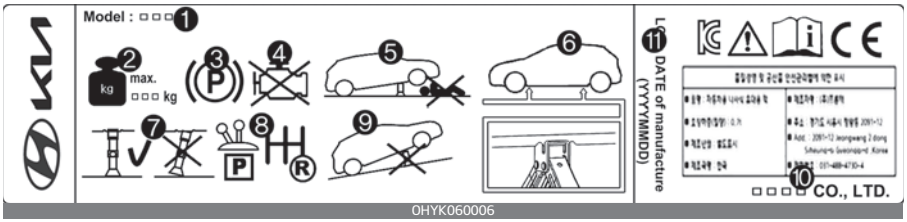

OHYK060006

Type B

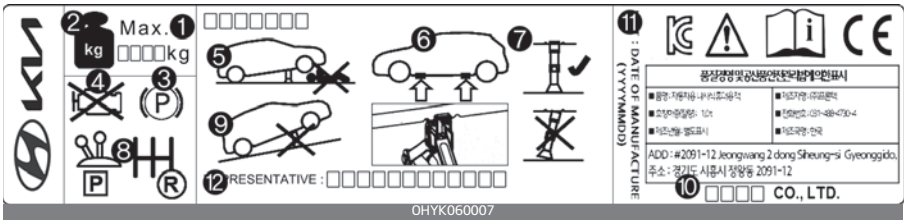

OHYK060007

Type C

OHYK064002

* The actual Jack label in the vehicle may differ from the illustration. For more detailed specifications, refer to the label attached to the jack.

1. Model Name
2. Maximum allowable load
3. When using the jack, set your parking brake.
4. When using the jack, stop the engine.
5. Do not get under a vehicle that is supported by a jack.
6. The designated locations under the frame
7. When supporting the vehicle, the base plate of jack must be vertical under the lifting point.
8. Move the shift lever to the P position on vehicles with automatic transmission.

9. The jack should be used on firm level ground.
10. Jack manufacturer
11. Production date
12. Representative company and address

If you have a flat tire (with Tire Mobility Kit) (if equipped)

Please read the instructions before using the Tire Mobility Kit.

1. Compressor
2. Sealant bottle

The Tire Mobility Kit is a temporary fix to the tire and the tire should be inspected by an authorized Kia dealer as soon as possible.

⚠ CAUTION

One sealant for one tire

When two or more tires are flat, do not use the Tire Mobility Kit because the canister of sealant in the Tire Mobility Kit only contains enough sealant for one flat tire.

⚠ WARNING

Speed with temporary fix

Do not exceed a speed of 50 mph (80 km/h) when driving with a tire sealed with the Tire Mobility Kit.

While driving, if you experience any unusual vibration, ride disturbance or noise, reduce your speed and drive with caution until you can safely pull off of the side of the road.

⚠ WARNING

Tire wall

Do not use the Tire Mobility Kit to repair large punctures or damage to the tire sidewalls. In these situations, the tire cannot be sealed completely and air will leak from the tire. This can result in tire failure.

⚠ WARNING

Temporary fix

Have your tire repaired as soon as possible.The tire may lose air pressure at any time after inflating with the Tire Mobility Kit.

⚠ CAUTION

- When replacing or repairing the tire after using tire sealant, make certain to remove the sealant attached to the inner part of the tire and wheel. If the sealant is not removed, noise and vibration may occur.
- If the TPMS warning light illuminates after using the Tire Mobility

Kit, have your vehicle inspected by an authorized Kia dealer.

- When repairing a flat tire with the Tire Mobility Kit (TMK), quickly remove the sealant on the tire pressure sensor and wheel. When installing the repaired tire and wheel, tighten the wheel nut to a torque value of 79~94 lbf·ft (11~13 kgf·m).

Introduction

With the Tire Mobility Kit (TMK) you stay mobile even after experiencing a tire puncture.

The system compressor and sealing compound effectively seal most punctures in a passenger car tire caused by nails or similar objects and reinflate the tire.

After you ensure that the tire is properly sealed, you can drive cautiously on the tire (up to 120 miles (200 km)) at a max. speed of 50 mph (80 km/h) in order to reach a vehicle or tire dealer to have the tire replaced.

It is possible that some tires, especially with larger punctures or damage to the sidewall, cannot be sealed completely.

Air pressure loss in the tire may adversely affect tire performance.

For this reason, you should avoid abrupt steering or other driving maneuvers, especially if the vehicle is heavily loaded or if a trailer is in use.

The Tire Mobility Kit is not designed or intended as a permanent tire repair method and is to be used for one tire only.

This instruction shows you step by step how to temporarily seal the puncture.

Refer to "Notes on the safe use of the Tire Mobility Kit" on page 6-27.

⚠ WARNING

Do not use the Tire Mobility Kit if a tire is severely damaged.
Only punctured areas located within the tread region of the tire can be sealed using the Tire Mobility Kit.

Notes on the safe use of the Tire Mobility Kit

- Park your car at the side of the road so that you can work with the Tire Mobility Kit away from moving traffic. Place your warning triangle in a prominent place to make passing vehicles aware of your location.
- To be sure your vehicle will not move, even when you're on fairly level ground, always set your parking brake.
- Only use the Tire Mobility Kit for sealing/inflation passenger car tires. Do not use on motorcycles, bicycles or any other type of tires.
- Do not remove any foreign objects such as nails or screws – that have penetrated the tire.
- Before using the Tire Mobility Kit, read the precautionary advice printed on the sealant bottle!
- Provided the car is outdoors, leave the engine running. Otherwise operating the compressor may eventually drain the car battery.
- Never leave the Tire Mobility Kit unattended while it is being used.
- Do not leave the compressor running for more than 10 min. at a time or it may overheat.
- Do not use the Tire Mobility Kit if the ambient temperature is below -22°F (-30°C).
- When the tire and wheel are damaged, do not use Tire Mobility Kit for your safety.

⚠ WARNING

- If sealant comes into contact with skin, wash the affected areas thoroughly. Seek medical attention if irritation develops and persists.
- If sealant comes into contact with the eyes, flush eyes with water for at least 15 minutes. Seek medical attention if irritation persists.
- If sealant is swallowed, call a physician or poison control center immediately.
  Exposure to the sealant for a long time may cause damage to the bodily tissues.

Components of the Tire Mobility Kit (TMK)

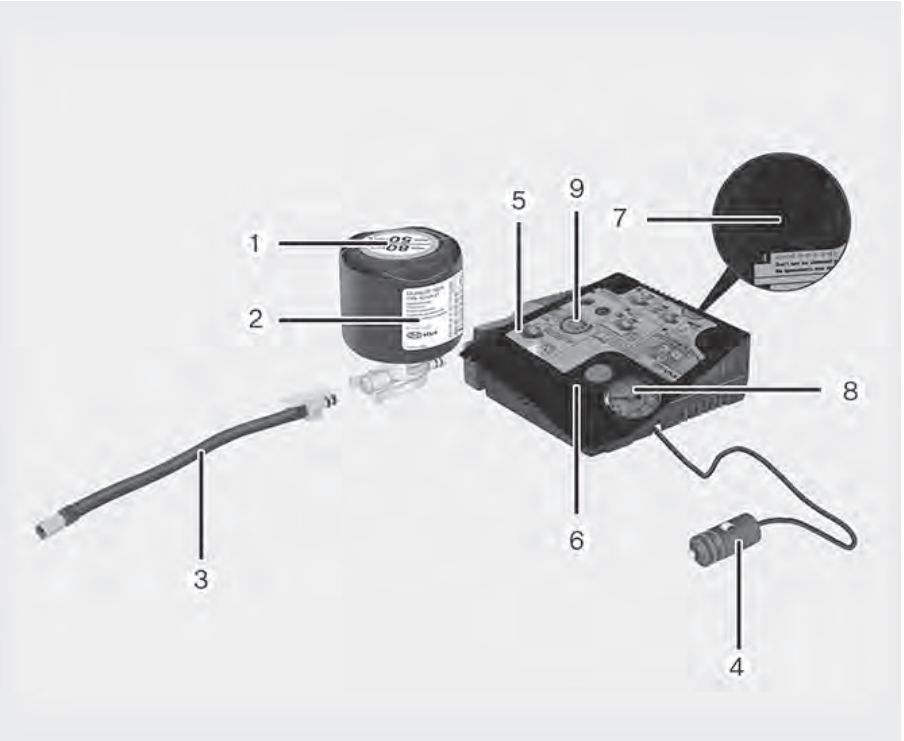

OCK060101N

1. Speed restriction label
2. Sealant bottle and label with speed restriction
3. Filling hose from sealant bottle to wheel
4. Connectors and cable for the power outlet direct connection
5. Holder for the sealant bottle
6. Compressor
7. On/off switch
8. Pressure gauge for displaying the tire inflation pressure
9. Button for reducing tire inflation pressure

Connectors and cable are stored in the compressor housing.

⚠ WARNING

Expired sealant

Do not use the tire sealant after the sealant has expired (after the expiration date on the sealant container). This can increase the risk of tire failure.

⚠ WARNING

Sealant

- Keep out of reach of children.
- Avoid contact with eyes.
- Do not swallow.

✻ NOTICE

The sealant container and insert hose (3) cannot be reused. Purchase an extra after use.

Using the Tire Mobility Kit

1. Detach the speed restriction label (1) from the sealant bottle (2), and place it in a highly visible place inside the vehicle such as on the steering wheel to remind the driver not to drive too fast.
2. Filling the sealant Strictly follow the specified sequence, otherwise the sealant may escape under high pressure.

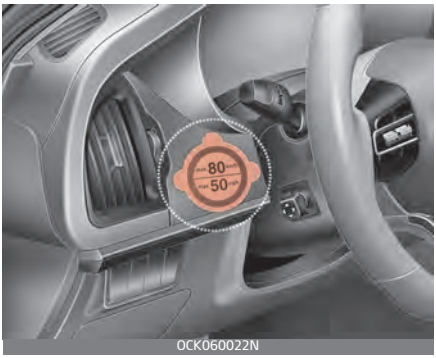

OCK060022N

⚠ CAUTION

Before using the Tire Mobility Kit, please read carefully the instruction attached on the sealant case.
Detach the speed limit label on the sealant case and put it on a highly visible place. Always drive within the speed limit.

3. Shake the sealant bottle.

OCK060102N

4. Connect the filling hose (3) onto the connector of the sealant bottle.

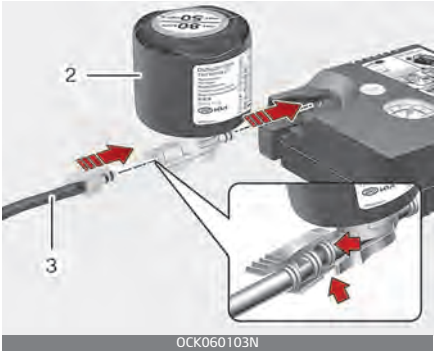

OCK060103N

5. Ensure that button (7) on the compressor is not pressed.

6. Unscrew the valve cap from the valve of the defective wheel and screw filling hose (3) of the sealant bottle onto the valve.

OCK060010N

7. Insert the sealant bottle into the housing (5) of the compressor so that the bottle is upright.
8. Ensure that the compressor is switched off.
9. Connect between compressor and the vehicle power outlet using the cable and connectors (4).

OCK060011

10. With the ENGINE START/STOP button position on: switch on the compressor and let it run for approximately 5~7 minutes to fill the sealant up to proper pressure (refer to the "Tires and wheels" on page 8-4). Be careful not to overinflate the tire and stay away from the tire when filling it. When the tire and wheel are damaged, do not use Tire Mobility Kit for your safety.

⚠ WARNING

Tire pressure

Do not attempt to drive your vehicle if the tire pressure is below 29 psi (200 kPa, 2 bar).

This could result in an accident due to sudden tire failure.

11. Switch off the compressor.
12. Detach the hose from the sealant bottle connector and from the tire valve.

Return the Tire Mobility Kit to its storage location in the vehicle.

⚠ WARNING

Carbon monoxide poisoning and suffocation is possible if the engine is left running in a poorly ventilated or unventilated location (such as inside a building).

Distributing the sealant

13. Immediately drive approximately 4 ~ 6 miles (7 ~ 10 km or, about 10 min) to evenly distribute the sealant in the tire.

⚠ CAUTION

Do not exceed a speed of 50 mph (80 km/h). If possible, do not fall below a speed of 12 mph (20 km/h).

While driving, if you experience any unusual vibration, ride disturbance or noise, reduce your speed and drive with caution until you can safely pull off of the side of the road. Call for road side service or towing.

When you use the Tire Mobility Kit, the wheel may be stained by sealant. Therefore, remove the tire pressure sensors and have your vehicle inspected by an authorized Kia dealer.

Checking the tire inflation pressure

1. After driving approximately 4 ~ 6 miles (7 ~ 10 km or about 10 minutes), stop at a suitable location.
2. Connect the filling hose (3) of the compressor (clip mounted side) directly and then connect the filling hose (3) (opposite side) to the tire valve.
3. Connect between compressor and the vehicle power outlet using the cable and connectors.
4. Adjust the tire inflation pressure to 29 psi (200 kPa). With the ENGINE START/STOP button ON position, proceed as follows.
   - **To increase the inflation pressure:** Switch on the compressor, position I. To check the current inflation pressure setting, briefly switch off the compressor.

⚠ WARNING

Do not let the compressor run for more than 10 minutes, otherwise the device will overheat and may be damaged.

   - **To reduce the inflation pressure:** Press the button (9) on the compressor.

⚠ WARNING

The tire inflation pressure must be at least 29 psi (200 kPa, 2 bar). If it is not, do not continue driving.

Call for road side service or towing.

Technical Data

System voltage: DC 12 V

Working voltage: DC 10 – 15 V

Amperage rating: max. 15 A ± 1A (at DC 12V operation)

Suitable for use at temperatures: -22 ~ +158°F (-30 ~ +70°C)

Max. working pressure: 87 psi (6 bar)

Size

Compressor: 6.3 x 5.9 x 2.2 in (161 x 150 x 55.8 mm)

Sealant bottle: 4.1 x 3.3 ø in (104 x 85 ø mm)

Compressor weight: 1.77 lbs ± 0.07 lbs (805 g ± 30 g)

Sealant volume: 18.3 cu. in (300 ml)

* Sealant and spare parts can be obtained and replaced at an authorized vehicle or tire dealer. Empty sealant bottles may be disposed of at home. Liquid residue from the sealant should be disposed of by your vehicle or tire dealer or in accordance with local waste disposal regulations.

Towing

Towing service

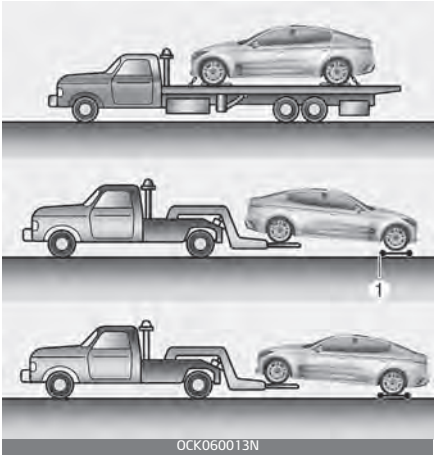

If emergency towing is necessary, we recommend having it done by an authorized Kia dealer or a commercial tow-truck service. Proper lifting and towing procedures are necessary to prevent damage to the vehicle. The use of wheel dollies(1) or flatbed is recommended.

On AWD vehicles, your vehicle must be towed with a wheel lift and dollies or flatbed equipment with all the wheels off the ground.

⚠ CAUTION

The AWD vehicle should never be towed with the wheels on the ground. This can cause serious damage to the transmission or the AWD system.

If any of the loaded wheels or suspension components are damaged or the vehicle is being towed with the front wheels on the ground, use a towing dolly under the front wheels.

When being towed by a commercial tow truck and wheel dollies are not used, the rear of the vehicle should always be lifted, not the front.

NOTICE

If the EPB does not release normally, take your vehicle to an authorized Kia dealer by loading the vehicle on a flatbed tow truck and have the system checked.

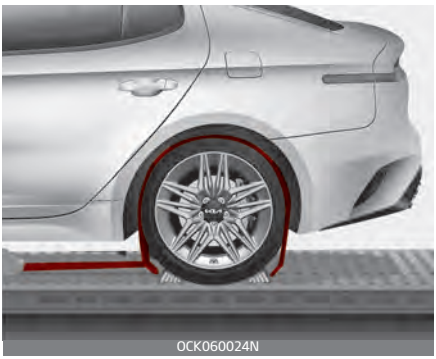
OCK060024N

- Ensure any metal parts on the tiedown straps do not contact painted surfaces or the face of the wheels.
- Do not place straps over the body panels or through the wheels.

CAUTION

Attaching straps to the chassis, suspension or other parts of the body can cause damage.

WARNING

Side and curtain Air bag

If your vehicle is equipped with side and curtain air bag, set the the ENGINE START/STOP button to ACC position when the vehicle is being towed.

The side and curtain air bag may deploy when the ignition is ON, and the rollover sensor detects the situation as a rollover.

CAUTION

Towing

OCK060014N

OCK060015N

- Do not tow the vehicle backwards with the rear wheels on the

ground as this may cause damage to the vehicle.
- Do not tow with sling-type equipment. Use wheel lift or flatbed equipment.

When towing your vehicle in an emergency without wheel dollies :
1. Set the ENGINE START/STOP button to ACC position.
2. Place the transmission shift lever in N (Neutral).
3. Release the parking brake.

⚠ CAUTION

Towing gear position

Failure to place the transmission shift lever in N (Neutral) may cause internal damage to the transmission.

Removable towing hook

OCK060017N

1. Open the liftgate, and remove the towing hook from the tool case.
2. Remove the hole cover pressing the right side part or lower part of the cover on the bumper.
3. Install the towing hook by turning it clockwise into the hole until it is fully secured.
4. Remove the towing hook and install the cover after use.

Emergency towing

Front

OCK060019N

Rear

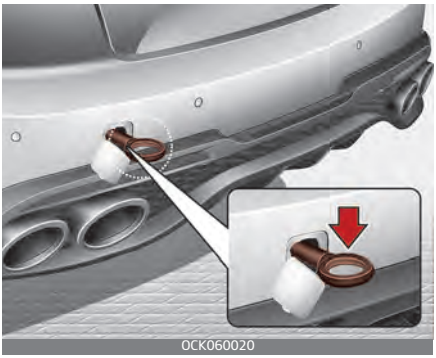
OCK060020

If towing is necessary, have it done by an authorized Kia dealer or a commercial tow truck service.

If towing service is not available in an emergency, your vehicle may be temporarily towed using a cable or chain secured to the emergency towing hook under the front (or rear) of the vehicle. Use extreme caution when towing the vehicle. A driver must be in the vehicle to steer it and operate the brakes.

Towing in this manner may be done only on hard-surfaced roads for a short distance and at low speed. Also, the wheels, axles, power train, steering and brakes must all be in good condition.

- Do not use the tow hooks to pull a vehicle out of mud, sand or other conditions from which the vehicle cannot be driven out under its own power.
- Avoid towing a vehicle heavier than the vehicle doing the towing.
- The drivers of both vehicles should communicate with each other frequently.
- Attach a towing strap to the tow hook.
- Use only a cable or chain specifically intended for use in towing vehicles. Securely fasten the cable or chain to the towing hook provided.
- Accelerate or decelerate the vehicle in a slow and gradual manner while maintaining tension on the tow rope or chain to start or drive the vehicle, otherwise tow hooks and the vehicle may be damaged.
- Before emergency towing, check if the hook is not broken or damaged.
- Fasten the towing cable or chain securely to the hook.
- Do not jerk the hook. Apply it steadily and with even force.
- To avoid damaging the hook, do not pull from the side or at a vertical angle. Always pull straight ahead.

⚠ CAUTION

Using a portion of the vehicle other than the tow hooks for towing may damage the body of your vehicle.

⚠ WARNING

Emergency Towing Precautions

Use extreme caution when towing the vehicle.

- Avoid sudden starts or erratic driving maneuvers which would place excessive stress on the emergency towing hook and towing cable or chain. The hook and towing cable or chain may break and cause serious injury or damage.
- If the disabled vehicle is unable to be moved, do not forcibly continue the towing. In this case, contact an authorized Kia dealer

or a commercial tow truck service for assistance.
- Tow the vehicle as straight ahead as possible.
- Keep away from the vehicle during towing.

- Use a towing strap less than 16 feet (5 m) long. Attach a white or red cloth (about 12 inches (30 cm) wide) in the middle of the strap for easy visibility.

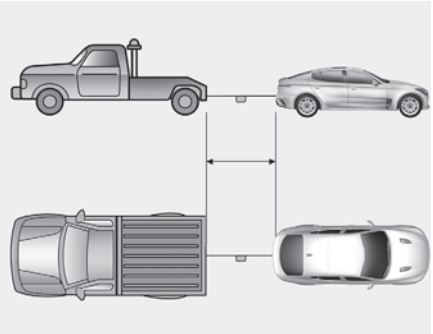
OCK060105N

- Drive carefully so that the towing strap is not loosened during towing.
- The driver must be in the vehicle for steering and braking operations when the vehicle is towed and passengers other than the driver must not be allowed to be on board.

Emergency towing precautions

- Turn the ENGINE START/STOP button to ACC position so the steering wheel isn't locked.
- Place the transmission shift lever in N (Neutral).
- Release the parking brake.
- Press the brake pedal with more force than normal since you will have reduced brake performance.
- More steering effort will be required because the power steering system will be disabled.
- If you are driving down a long hill, the brakes may overheat and brake performance will be reduced. Stop often and let the brakes cool off.
- To avoid serious damage to the automatic transmission, limit the vehicle speed to 10 mph (15 km/h) and drive less than 1 mile (1.5 km) when towing. (for Automatic transmission vehicle)
- If the car is being towed with all four wheels on the ground, it can be towed only from the front. Be sure that the transmission is in neutral. Be sure the steering is unlocked by placing the ENGINE START/STOP button to ACC position. A driver must be in the towed vehicle to operate the steering and brakes.

⚠ CAUTION

Automatic transmission

Before towing, check the automatic transmission for fluid leaks under your vehicle. If the automatic transmission fluid is leaking, flatbed equipment or a towing dolly must be used.

Maintenance 7

Engine compartment **7-4**
Maintenance services **7-5**
• Owner's responsibility 7-5
• Owner maintenance precautions 7-6
Owner maintenance **7-7**
• Owner maintenance schedule 7-7
Scheduled maintenance service **7-9**
Explanation of scheduled maintenance items **7-22**
Checking fluid levels **7-25**
Engine oil **7-26**
• Checking the engine oil level 7-26
• Changing the engine oil and filter 7-27
Engine Coolant **7-29**
• Checking the coolant level 7-29
• Changing the coolant 7-31
Brake fluid **7-32**
• Checking the brake fluid level 7-32
Washer fluid **7-33**
• Checking the washer fluid level 7-33
Air cleaner **7-34**
• Filter replacement 7-34
Climate control air filter **7-36**
• Filter inspection 7-36
Wiper blades **7-37**
• Blade inspection 7-37
• Blade replacement 7-38
Battery **7-39**

7 Maintenance

• Battery replacement 7-39
• For best battery service 7-40
• Recharging the battery 7-41
• Reset items 7-42
Tires and wheels 7-43
• Tire care 7-43
• Recommended cold tire inflation pressures 7-43
• Tire pressure 7-44
• Checking tire inflation pressure 7-44
• Tire rotation 7-45
• Wheel alignment and tire balance 7-46
• Flat Spots 7-46
• Tire replacement 7-47
• Wheel replacement 7-47
• Tire traction 7-48
• Tire maintenance 7-48
• Tire sidewall labeling 7-48
• Tire terminology and definitions 7-51
• All season tires 7-54
• Summer tires 7-54
• Snow tires 7-55
• Tire chains 7-55
• Radial-ply tires 7-55
• Low aspect ratio tire 7-56
Fuses 7-57
• Inner panel fuse replacement 7-59
• Engine compartment fuse replacement 7-61
• Fuse/relay panel description 7-62
Light bulbs 7-73
• Bulb replacement precaution 7-73

Maintenance 7

• Light bulb position (Front) 7-75
• Light bulb position (Rear) 7-75
• Light bulb position (Side) 7-76
• Headlamp (LED type) replacement 7-76
• Stop and tail lamp (LED type) bulb replacement 7-77
• Back up lamp (bulb type) bulb replacement 7-78
• Rear turn signal lamp (bulb type) bulb replacement 7-79
• Rear side marker (LED type) bulb replacement 7-80
• Rear turn signal lamp (LED type) bulb replacement 7-81
• High mounted stop lamp (LED type) bulb replacement 7-81
• License plate lamp (LED type) bulb replacement 7-82
• Side repeater lamp (LED type) bulb replacement 7-82
• Map lamp (LED type) bulb replacement 7-83
• Vanity mirror lamp (LED type) bulb replacement 7-83
• Room lamp (LED type) bulb replacement 7-84
• Glove box lamp (LED type) bulb replacement 7-84
• Luggage room lamp (LED type) bulb replacement 7-85

Appearance care 7-85

• Exterior care 7-85
• Interior care 7-90

Emission control system 7-93

• 1. Crankcase emission control system 7-93
• 2. Evaporative emission control (including ORVR: Onboard Refueling Vapor Recovery) system 7-93
• 3. Exhaust emission control system 7-94

California perchlorate notice 7-96

Maintenance

Engine compartment

Smartstream G2.5 FR T-GDi

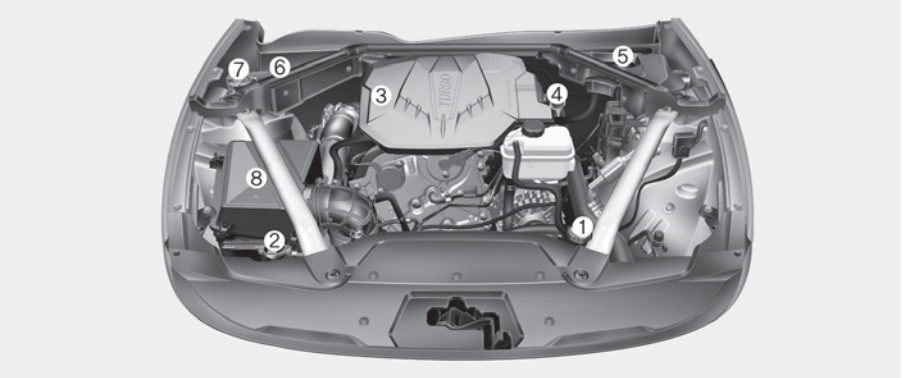

OCK070001N

(Gasoline) 3.3 T-GDi

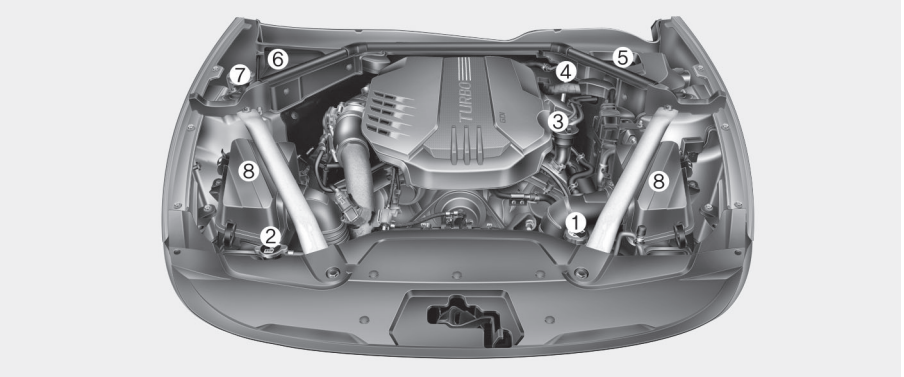

OCK077002

* The actual engine room in the vehicle may differ from the illustration.

* The battery is in the trunk.

1. Engine coolant reservoir
2. Radiator cap
3. Engine oil filler cap
4. Engine oil dipstick
5. Brake fluid reservoir
6. Fuse box
7. Windshield washer fluid reservoir
8. Air cleaner

Maintenance services

You should exercise the utmost care to prevent damage to your vehicle and injury to yourself whenever performing any maintenance or inspection procedures.

Should you have any doubts concerning the inspection or servicing of your vehicle, we strongly recommend that you have an authorized Kia dealer perform this work.

An authorized Kia dealer has factorytrained technicians and genuine Kia parts to service your vehicle properly. For expert advice and quality service, see an authorized Kia dealer.

Inadequate, incomplete or insufficient servicing may result in operational problems with your vehicle that could lead to vehicle damage, an accident, or personal injury.

Owner's responsibility

NOTICE

Maintenance Service and Record Retention are the owner's responsibility.

You should retain documents that show proper maintenance has been performed on your vehicle in accordance with the scheduled maintenance service charts shown on the following pages. You need this information to establish your compliance with the servicing and maintenance requirements of your vehicle warranties.

Detailed warranty information is provided in your Warranty & Consumer Information manual.

Repairs and adjustments required as a result of improper maintenance or a lack of required maintenance are not covered.

We recommend you have your vehicle maintained and repaired by an authorized Kia dealer. An authorized Kia dealer meets Kia's high service quality standards and receives technical support from Kia in order to provide you with a high level of service satisfaction.

NOTICE

NHTSA Safety Corrosion Alert

The National Highway Traffic Safety Administration (NHTSA) has issued a general warning to all vehicle owners of all brands regarding the risks associated with vehicle underbody corrosion. From your initial purchase, take the following steps to prevent unsafe corrosion damage to your vehicle:

- Wash the undercarriage of your vehicle regularly during the winter and whenever your vehicle has

been exposed to such salts or chemicals.
- Do a thorough washing of the undercarriage at the end of the winter.
- Use professional service technicians or governmental inspection stations to annually inspect for corrosion.
- Immediately seek an inspection of your vehicle if you become visually aware of corrosion flaking or scaling or if you become aware of a change in vehicle performance, such as soft or spongy brakes, fluids leaking, impairment of directional control, suspension noises or rattling metal straps. NHTSA further advises that after a vehicle is 7 years old, it is essential that you take these indicated maintenance steps to ensure that you protect yourself from unsafe corrosion conditions.

Owner maintenance precautions

Improper or incomplete service may result in problems. This section gives instructions only for the maintenance items that are easy to perform.

As explained earlier in this section, several procedures can be done only by an authorized Kia dealer with special tools.

NOTICE

Improper owner maintenance during the warranty period may affect warranty coverage. For details, read the separate Warranty & Consumer Information manual provided with the vehicle. If you're unsure about any servicing or maintenance procedure, have it done by an authorized Kia dealer.

WARNING

Maintenance work

Do not wear jewelry or loose clothing while working under the hood of your vehicle with the engine running.These could become entangled in moving parts. If you must run the engine while working under the hood, make certain that you remove all jewelry (especially rings, bracelets, watches, and necklaces) and all neckties, scarves, and similar loose clothing before getting near the engine or cooling fans.

⚠ WARNING

Touching metal parts

OCK070088L

Do not touch metal parts (including strut bars) while the engine is operating or hot. Doing so could result in serious personal injury. Turn the engine off and wait until the metal parts cool down to perform maintenance work on the vehicle.

Owner maintenance

The following lists are vehicle checks and inspections that should be performed by the owner or an authorized Kia dealer at the frequencies indicated to help ensure safe, dependable operation of your vehicle.

Any adverse conditions should be brought to the attention of your dealer as soon as possible.

These Owner Maintenance Checks are generally not covered by warranties and you may be charged for labor, parts and lubricants used.

Owner maintenance schedule

When you stop for fuel:

- Check the engine oil level.
- Check the coolant level in coolant reservoir.
- Check the windshield washer fluid level.
- Look for low or under-inflated tires.
- Check if the front of the radiator and condenser are clean and not blocked with leaves, dirt or insects etc. If any of the above parts are extremely dirty or you are not sure of their condition, take your vehicle to an authorized Kia dealer.

⚠ WARNING

Hot coolant

Be careful when checking your engine coolant level when the engine is hot. Scalding hot coolant and steam may blow out under pressure.

While operating your vehicle:

- Note any changes in the sound of the exhaust or any smell of exhaust fumes in the vehicle.
- Check for vibrations in the steering wheel. Notice any increased steering effort or looseness in the steering wheel, or change in its straight ahead position.
- Notice if your vehicle constantly turns slightly or "pulls" to one side when traveling on smooth, level road.
- When stopping, listen and check for unusual sounds, pulling to one side, increased brake pedal travel or "hard-to-push" brake pedal.
- If any slipping or changes in the operation of your transmission occurs, check the transmission fluid level.
- Check the automatic transmission P (Park) function.
- Check the parking brake.
- Check for fluid leaks under your vehicle (water dripping from the air conditioning system during or after use is normal).

At least monthly:

- Check the coolant level in the engine coolant reservoir.
- Check the operation of all exterior lights, including the stoplights, turn signals and hazard warning flashers.
- Check the inflation pressures of all tires including the spare for tires that are worn, show uneven wear, or are damaged.
- Check for loose wheel lug nuts.

At least once every 6 months:

- Check the radiator, heater and air conditioning hoses for leaks or damage.
- Check the windshield washer spray and wiper operation. Clean the wiper blades with clean cloth dampened with washer fluid.
- Check the headlight alignment.
- Check the muffler, exhaust pipes, shields and clamps.
- Check the lap/shoulder belts for wear and function.

At least once a year:

- Clean the body and door drain holes.
- Lubricate the door hinges and check the hood hinges.
- Lubricate the door and hood locks and latches.
- Lubricate the door rubber weatherstrips.
- Check the air conditioning system.
- Inspect and lubricate automatic transmission linkage and controls.
- Clean the battery and terminals.
- Check the brake fluid level.
- Visually inspect steering, suspension, and chassis components for damaged, loose, or missing parts or signs of wear.

Scheduled maintenance service

Follow the Normal Maintenance Schedule if the vehicle is usually operated where none of the following conditions apply. If any of the following conditions apply, follow the Maintenance Under Severe Usage Conditions.

- Repeated driving short distance of less than 5 miles (8 km) in normal temperature or less than 10 miles (16 km) in freezing temperature
- Extensive engine idling or low speed driving for long distances
- Driving on rough, dusty, muddy, unpaved, graveled or salt-spread roads
- Driving in areas using salt or other corrosive materials or in very cold weather
- Driving in heavy dust condition
- Driving in heavy traffic area
- Driving on uphill, downhill, or mountain road repeatedly
- Using for towing or camping, and driving with loading on the roof.
- Driving as a patrol car, taxi, other commercial use of vehicle towing
- Frequently driving under high speed or rapid acceleration/deceleration.
- Frequently driving in stop-and-go condition

If your vehicle operates under the following conditions, you should inspect, replace or refill more frequently or follow the 'Severe' Maintenance schedule. After the periods or distance shown in the chart, continue to follow the prescribed maintenance intervals.

Normal Maintenance Schedule – Turbo Models (For Smartstream G2.5 FR T-GDi)

The following maintenance services must be performed to ensure good emission control and performance. Keep receipts for all vehicle emission services to protect your warranty. Where both mileage and time are shown, the frequency of service is determined by whichever occurs first.

I: Inspect and if necessary, adjust, correct, clean or replace.
R: Replace or change.

Number of months or driving distance, whichever comes first														
Months		12	24	36	48	60	72	84	96	108	120	132	144	156
Miles×1,000		8	16	24	32	40	48	56	64	72	80	88	96	104
Km×1,000		13	26	39	52	65	78	91	104	117	130	143	156	169
Tire rotation		Rotate every 8,000 miles (13,000 km)												
Fuel additives *1		Add every 8,000 miles (13,000 km) or 12 months												
Engine oil and engine oil filter *2	Smartstream G2.5 FR T-GDi	R	R	R	R	R	R	R	R	R	R	R	R	R
Climate control air filter		I	R	I	R	I	R	I	R	I	R	I	R	I
Air cleaner filter (Engine)		I	I	R	I	I	R	I	I	R	I	I	R	I
Differential oil (rear) *3 *4	With LSD	–	–	–	–	R	–	–	–	–	R	–	–	–
Brake fluid		Inspect every 8,000 miles (13,000 km) or 12 months, replace every 48,000 miles (78,000 km) or 48 months												
Spark plugs *5	Smartstream G2.5 FR T-GDi	Replace every 48,000 miles (78,000 km)												
Coolant (Engine) *6		At first, replace at 120,000 miles (195,000 km) or 120 months. After that, replace every 24,000 miles (39,000 km) or 24 months												
Battery condition		I	I	I	I	I	I	I	I	I	I	I	I	I
Vacuum hoses														
Air conditioner refrigerant														
Exhaust system														
Brake lines, hoses and connections														
Brake discs and pads														
Suspension ball joints														
Steering gear rack, linkage and boots														
Air conditioner compressor														

Number of months or driving distance, whichever comes first														
Months		12	24	36	48	60	72	84	96	108	120	132	144	156
Miles×1,000		8	16	24	32	40	48	56	64	72	80	88	96	104
Km×1,000		13	26	39	52	65	78	91	104	117	130	143	156	169
Air intake hose	Smartstream G2.5 T-GDi	I	-	I	-	I	-	I	-	I	-	I	-	I
Parking brake		-	I	-	I	-	I	-	I	-	I	-	I	-
Drive shaft and boots														
Propeller shaft														
Vapor hose and fuel filler cap														
Fuel lines, hoses and connections														
Fuel tank air filter														
Cooling system		-	-	-	I	-	I	-	I	-	I	-	I	-
Differential oil (front) (AWD) *3		-	-	-	-	I	-	-	-	-	I	-	-	-
Differential oil (rear) *3	Without LSD													
Drive belts (Engine) *7		-	-	-	-	-	I	I	I	I	I	I	I	I
Automatic transmission fluid		No service required												
Transfer case oil (AWD) *8														

* 1: Fuel additives: Kia recommends that you use unleaded gasoline which has an octane rating of RON (Research Octane Number) 95/AKI (Anti Knock Index) 91 or higher.For customers who do not use good quality gasolines including fuel additives regularly, and have problems starting or the engine does not run smoothly, one bottle of additives should be added to the fuel tank at every 8,000miles (13,000km).Additives are available from an authorized Kia dealer. Do not mix with other additives.
* 2: Engine oil and engine oil filter: Check the engine oil level and leaks when stopping for fuel or before starting a long trip. As it is normal for engine oil to be consumed during driving, the engine oil level should be checked on regular basis. The engine oil change interval for normal operating conditions is based on the use of the recommended engine specification. If the recommended engine oil specification is not used, then replace the engine oil according to the maintenance schedule under severe operating conditions. Refer to "Recommended SAE viscosity number" on page 8-9.
* 3: Differential oil (rear, front) (AWD): Differential oil should be changed anytime they have been submerged in water.
* 4: Differential oil (rear) With LSD: When replacing differential oil with LSD, use only specified LSD oil.
* 5: Spark plug: For your convenience, it can be replaced prior to it's interval when you do maintenance of other items.
* 6: Coolant (Engine): When adding coolant, use only deionized water or soft water for your vehicle and never mix hard water in the coolant filled at the factory. An improper coolant mixture can result in serious malfunction or engine damage.

* 7: Drive belts (Engine): Inspect alternator, water pump and air conditioner drive belt and if necessary, repair or replace.Inspect drive belt tensioner, idler and alternator pulley and if necessary correct or replace.
* 8: Transfer case oil (AWD): Fluids should be changed anytime vehicle has been submerged in water.

- Fuel filter (gasoline engine): The fuel filter is considered to be maintenance free but periodic inspection is recommended for this maintenance schedule depends on fuel quality.
  - If there are some important safety matters like fuel flow restriction, surging, loss of power, hard starting problem etc, replace the fuel filter immediately regardless of maintenance schedule and consult an authorized Kia dealer for details.

Maintenance under severe usage conditions – Turbo Models (For Smart-stream G2.5 FR T-GDi)

The following items must be serviced more frequently on cars normally used under severe driving conditions. Refer to the chart below for the appropriate maintenance intervals.

R : Replace
I : Inspect and, after inspection, clean, adjust, repair or replace if necessary

Maintenance item		Maintenance operation	Maintenance intervals	Driving condition
Engine oil and engine oil filter	Smart-stream G2.5 FR T-GDi	R	Every 5,000 miles (8,000 km) or 6 months	A, B, C, D, E, F, G, H, I, J, K
Differential oil (rear)	With LSD	R	Every 36,000 miles (60,000 km)	C, E, G, H, I, J
	Without LSD	R	Every 72,000 miles (117,000 km)	C, E, G, H, I, J
Automatic transmission fluid		R	Every 56,000 miles (91,000 km)	A,C, E, F, G, H, I, K
Differential oil (front) (AWD)		R	Every 72,000 miles (117,000 km)	C, E, G, H, I, J
Climate control air filter		R	More frequently	C, E, G
Air cleaner filter		R	More frequently	C, E
Spark plugs		R	More frequently	A, B, F, G, H, I, K
Parking brake		I	More frequently	C, D, G, H
Brake discs, pads and calipers		I	More frequently	C, D, E, G, H, J,K
Suspension ball joints		I	More frequently	C, D, E, F, G, H, I, J
Steering gear rack, linkage and boots		I	More frequently	C, D, E, F, G, H, I
Drive shaft and boots		I	More frequently	C, D, E, F, G, H, I, J
Propeller shaft		I	More frequently	C, D, E, F, G, H, I, J
Transfer case oil (AWD)		No service required		

Severe driving conditions

- A: Repeatedly driving short distance of less than 5 miles (8 km) in normal temperature or less than 10 miles (16 km) in freezing temperature.
- B: Extensive engine idling or low speed driving for long distances.
- C: Driving on rough, dusty, muddy, unpaved, graveled or saltspread roads.
- D: Driving in areas using salt or other corrosive materials or in very cold weather
- E: Driving in heavy dust condition.
- F: Driving in heavy traffic area.
- G: Driving on uphill, downhill, or mountain roads repeatedly.
- H: Using for towing or camping, and driving with loading on the roof.
- I: Driving for patrol car, taxi, other commercial use of vehicle towing.
- J: Frequently driving under high speed or rapid acceleration/deceleration.
- K: Frequently driving in stop-and-go conditions.

Normal Maintenance Schedule – Turbo Models (For (Gasoline) 3.3 T-GDi)

The following maintenance services must be performed to ensure good emission control and performance. Keep receipts for all vehicle emission services to protect your warranty. Where both mileage and time are shown, the frequency of service is determined by whichever occurs first.

R : Replace or change.

I : Inspect and if necessary, adjust, correct, clean or replace.

Number of months or driving distance, whichever comes first																
Months		12	24	36	48	60	72	84	96	108	120	132	144	156	168	180
Miles×1,000		6	12	18	24	30	36	42	48	54	60	66	72	78	84	90
Km×1,000		10	20	30	40	50	60	70	80	90	100	110	120	130	140	150
Tire rotation		Rotate every 6,000 miles (10,000 km)														
Fuel additives *1		Add every 6,000 miles (10,000 km) or 12 months														
Engine oil and engine oil filter *2	(Gasoline) 3.3 T-GDi	R	R	R	R	R	R	R	R	R	R	R	R	R	R	R
Climate control air filter		I	R	I	R	I	R	I	R	I	R	I	R	I	R	I
Air cleaner filter (Engine)		-	I	-	R	-	I	-	R	-	I	-	R	-	I	-
Differential oil (rear) *3*4	With LSD	-	-	-	-	-	R	-	-	-	-	-	R	-	-	-
Spark plugs *5	(Gasoline) 3.3 T-GDi	Replace every 42,000 miles (70,000 km)														
Brake fluid		Inspect every 6,000 miles (10,000 km) or 12 months, Replace every 48,000 miles (80,000 km) or 48 months														
Coolant (Engine) *6		At first, replace at 120,000 miles (200,000 km) or 10 years : after that, replace every 30,000 miles (50,000 km) or 24 months														

Number of months or driving distance, whichever comes first																
Months		12	24	36	48	60	72	84	96	108	120	132	144	156	168	180
Miles×1,000		6	12	18	24	30	36	42	48	54	60	66	72	78	84	90
Km×1,000		10	20	30	40	50	60	70	80	90	100	110	120	130	140	150
Battery condition		I	I	I	I	I	I	I	I	I	I	I	I	I	I	I
Vacuum hose																
Air conditioner refrigerant																
Exhaust system																
Brake lines, hoses and connections																
Brakes disc and pads																
Suspension ball joints																
Steering gear rack, linkage and boots																
Air conditioner compressor																
Inter-cooler, in/out hose, air intake hose	(Gasoline) 3.3 T-GDi	I	–	I	–	I	–	I	–	I	–	I	–	I	–	I
Parking brake		–	I	–	I	–	I	–	I	–	I	–	I	–	I	–
Drive shaft and boots																
Propeller shaft																
Vapor hose, fuel filler cap																
Fuel lines, hoses and connections																
Fuel tank air filter																
Cooling system		–	–	–	I	–	I	–	I	–	I	–	I	–	I	–
Differential oil (front) (AWD)*3		–	–	–	–	–	I	–	–	–	–	–	I	–	–	–
Differential oil (rear)*3	Without LSD															

7

Number of months or driving distance, whichever comes first																
Months		12	24	36	48	60	72	84	96	108	120	132	144	156	168	180
Miles×1,000		6	12	18	24	30	36	42	48	54	60	66	72	78	84	90
Km×1,000		10	20	30	40	50	60	70	80	90	100	110	120	130	140	150
Valve clearance*7	(Gasoline) 3.3 T-GDi	Inspect every 60,000 miles (100,000 km) or 72 months														
Drive belts*8		At first, inspect at 60,000 miles (100,000 km) or 72 months, after that, inspect every 12,000 miles (20,000 km) or 24 months														
Automatic transmission fluid		No service required														
Transfer case oil (AWD)*9		No service required														

* 1: Fuel additives : Kia recommends that you use unleaded gasoline which has an octane rating of RON (Research Octane Number) 95/AKI (Anti Knock Index) 91 or higher.For customers who do not use good quality gasolines including fuel additives regularly, and have problems starting or the engine does not run smoothly, one bottle of additives should be added to the fuel tank at every 6,000 miles (10,000 km). Additives are available from an authorized Kia dealer. Do not mix with other additives.
* 2: Engine oil and engine oil filter : Check the engine oil level and leaks when stopping for fuel or before starting a long trip. As it is normal for engine oil to be consumed during driving, the engine oil level should be checked on regular basis. The engine oil change interval for normal operating conditions is based on the use of the recommended engine specification. If the recommended engine oil specification is not used, then replace the engine oil according to the maintenance schedule under severe operating conditions. Refer to "Recommended SAE viscosity number" on page 8-9.
* 3: Differential oil (rear, front) (AWD) : Differential oil should be changed anytime they have been submerged in water.
* 4: Differential oil (rear) With LSD : When replacing differential oil with LSD, use only specified LSD oil.
* 5: Spark plug : For your convenience, it can be replaced prior to it's interval when you do maintenance of other items.
* 6: Coolant (Engine) : When adding coolant, use only deionized water or soft water for your vehicle and never mix hard water in the coolant filled at the factory. An improper coolant mixture can result in serious malfunction or engine damage.
* 7: Valve clearance : Inspect for excessive valve noise and/or engine vibration and adjust if necessary. Have an authorized Kia dealer perform the operation.
* 8: Drive belts (Engine) : Inspect alternator, water pump and air conditioner drive belt and if necessary, repair or replace. Inspect drive belt tensioner, idler and alternator pulley and if necessary correct or replace.

* 9: Transfer case oil (AWD) : Fluids should be changed anytime vehicle has been submerged in water.

- Fuel filter (gasoline engine): The fuel filter is considered to be maintenance free but periodic inspection is recommended for this maintenance schedule depends on fuel quality.
  - If there are some important safety matters like fuel flow restriction, surging, loss of power, hard starting problem etc, replace the fuel filter immediately regardless of maintenance schedule and consult an authorized Kia dealer for details.

Maintenance Under Severe Usage Conditions – Turbo Models (For (Gasoline) 3.3 T-GDi)

The following items must be serviced more frequently on cars normally used under severe driving conditions. Refer to the chart below for the appropriate maintenance intervals.

R : Replace

I : Inspect and, after inspection, clean, adjust, repair or replace if necessary

Maintenance item		Maintenance operation	Maintenance intervals	Driving condition
Engine oil and engine oil filter	(Gasoline) 3.3 T-GDi	R	Every 3,000 miles (5,000 km) or 6 months	A, B, C, D, E, F, G, H, I, J, K
Differential oil (rear)	With LSD	R	Every 36,000 miles (60,000 km)	C, E, G, H, I, J
	Without LSD	R	Every 72,000 miles (120,000 km)	C, E, G, H, I, J
Automatic transmission fluid		R	Every 60,000 miles (100,000 km)	A,C, E, F, G, H, I, K
Differential oil (front) (AWD)		R	Every 72,000 miles (120,000 km)	C, E, G, H, I, J
Climate control air filter		R	More frequently	C, E, G
Spark plugs		R	More frequently	A, B, F, G, H, I, K
Air cleaner filter		I	More frequently	C, E
Parking brake		I	More frequently	C, D, G, H
Brake discs, pads and calipers		I	More frequently	C, D, E, G, H, J, K
Suspension ball joints		I	More frequently	C, D, E, F, G, H, I, J
Steering gear rack, linkage and boots		I	More frequently	C, D, E, F, G, H, I
Drive shafts and boots		I	More frequently	C, D, E, F, G, H, I, J
Propeller shaft		I	More frequently	C, D, E, F, G, H, I, J
Transfer case oil (AWD)		No service required		

Severe driving conditions

- A: Repeatedly driving short distance of less than 5 miles (8 km) in normal temperature or less than 10 miles (16 km) in freezing temperature.
- B: Extensive engine idling or low speed driving for long distances.
- C: Driving on rough, dusty, muddy, unpaved, graveled or saltspread roads.
- D: Driving in areas using salt or other corrosive materials or in very cold weather.
- E: Driving in heavy dust condition.
- F: Driving in heavy traffic area.
- G: Driving on uphill, downhill, or mountain road repeatedly.
- H: Using for towing or camping, and driving with loading on the roof.
- I: Driving as a patrol car, taxi, other commercial use or vehicle towing.
- J: Frequently driving under high speed or rapid acceleration/deceleration.
- K: Frequently driving in stop-and-go conditions

Explanation of scheduled maintenance items

Engine oil and filter

The engine oil and filter should be changed at the intervals specified in the maintenance schedule. If the vehicle is being driven in severe conditions, more frequent oil and filter changes are required.

Drive belts

Inspect all drive belts for evidence of cuts, cracks, excessive wear or oil saturation and replace if necessary. Drive belts should be checked periodically for proper tension and adjusted as necessary.

Fuel filter (for gasoline)

Kia gasoline vehicle is equipped a lifetime fuel filter that integrated with the fuel tank. Regular maintenance or replacement is not needed but depends on fuel quality. If there are some important safety matters like fuel flow restriction, surging, loss of power, hard starting problem etc, fuel filter inspection or replace is needed.

The fuel filter be Inspected or replaced by an authorized Kia dealer.

Fuel lines, fuel hoses and connections

Check the fuel lines, fuel hoses and connections for leakage and damage. Have an authorized Kia dealer replace any damaged or leaking parts immediately.

Vapor hose and fuel filler cap

The vapor hose and fuel filler cap should be inspected at those intervals specified in the maintenance schedule. Make sure that a new vapor hose or fuel filler cap is correctly replaced.

Vacuum crankcase ventilation hoses

Inspect the surface of hoses for evidence of heat and/or mechanical damage. Hard and brittle rubber, cracking, tears, cuts, abrasions, and excessive swelling indicate deterioration. Particular attention should be paid to examine those hose surfaces nearest to high heat sources, such as the exhaust manifold.

Inspect the hose routing to assure that the hoses do not come in contact with any heat source, sharp edges or moving component which might cause heat damage or mechanical wear. Inspect all hose connections, such as clamps and couplings, to make sure they are secure, and that no leaks are pres-

ent. Hoses should be replaced immediately if there is any evidence of deterioration or damage.

Air cleaner filter

A Genuine Kia air cleaner filter is recommended when the filter is replaced.

Spark plugs

Make sure to install new spark plugs of the correct heat range.

When assembling parts, be sure to wipe the inside and outside of the boot bottom of the ignition coil and the insulator of the spark plug with a soft cloth to prevent contamination of the spark plug insulator.

Valve clearance (if equipped)

Inspect excessive valve noise and/or engine vibration and adjust if necessary. An authorized Kia dealer should perform the operation.

Cooling system

Check the cooling system components, such as the radiator, coolant reservoir, hoses and connections for leakage and damage. Replace any damaged parts.

Coolant

The coolant should be changed at the intervals specified in the maintenance schedule.

Automatic transmission fluid

Automatic transmission fluid should not be checked under normal usage conditions.

But in severe conditions, the fluid should be changed at an authorized Kia dealer in accordance to the scheduled maintenance at the beginning of this chapter.

NOTICE

Automatic transmission fluid color is basically red.

As the vehicle is driven, the automatic transmission fluid will begin to look darker.

It is normal condition and you should not judge the need to replace the fluid based upon the changed color.

CAUTION

Use only specified automatic transmission fluid. The use of a non-specified fluid could result in a transmission malfunction and failure. (Refer to "Recommended lubricants and capacities" on page 8-7.)

Brake hoses and lines

Visually check for proper installation, chafing, cracks, deterioration and any leakage. Replace any deteriorated or damaged parts immediately.

NOTICE

NHTSA Safety Corrosion Alert

NHTSA has warned all vehicle owners of all brands that they must maintain their vehicles in a manner which will prevent brake hose and brake line failures due to corrosion when such vehicles are exposed to winter road salt and related chemicals. While serious corrosion conditions typically only manifest themselves as safety issues after 7 years of vehicle use, the corrosion process starts immediately and thus underbody cleaning maintenance must commence from your vehicle's first exposure to road salts and chemicals. NHTSA urges vehicle owners to take the following steps to prevent corrosion:

1. Wash the undercarriage of your vehicle regularly throughout the winter and do a thorough washing in the spring to remove road salt and other de-icing chemicals.
2. Monitor the brake system for signs of corrosion by having regular professional inspections and watching for signs of problems, including loss of brake fluid, unusual leaks and soft or spongy feel in the brake pedal.
3. Replace the entire brake pipe assembly if you find severe corrosion that causes scaling or flaking of brake components.

Brake fluid

Check the brake fluid level in the brake fluid reservoir. The level should be between “MIN” and “MAX” marks on the side of the reservoir. Use only hydraulic brake fluid conforming to DOT 4 specification.

Parking brake

Inspect the parking brake system including the parking brake pedal and cables.

Brake discs, pads and calipers

Check the pads for excessive wear, discs for run out and wear, and calipers for fluid leakage.

Exhaust pipe and muffler

Visually inspect the exhaust pipes, muffler and hangers for cracks, deterioration, or damage. Start the engine and listen carefully for any exhaust gas leakage. Tighten connections or replace parts as necessary.

Suspension mounting bolts

Check the suspension connections for looseness or damage. Retighten to the specified torque.

Steering gear box, linkage & boots/ lower arm ball joint

With the vehicle stopped and engine off, check for excessive free-play in the steering wheel.

Check the linkage for bends or damage. Check the dust boots and ball joints for deterioration, cracks, or damage. Replace any damaged parts.

Drive shafts and boots

Check the drive shafts, boots and clamps for cracks, deterioration, or damage. Replace any damaged parts and, if necessary, repack the grease.

Air conditioning refrigerant

Check the air conditioning lines and connections for leakage and damage.

Checking fluid levels

When checking engine oil, engine coolant, brake fluid, and washer fluid, always be sure to clean the area around any filler plug, drain plug, or dipstick before checking or draining any lubricant or fluid. This is especially important in dusty or sandy areas and when the vehicle is used on unpaved roads. Cleaning the plug and dipstick areas will prevent dirt and grit from entering the engine and other mechanisms that could be damaged.

Engine oil

Checking the engine oil level

Engine oil is used for lubricating, cooling, and operating various hydraulic components in the engine. Engine oil consumption while driving is normal, and it is necessary to check and refill the engine oil regularly. Also, check and refill the oil level within the recommended maintenance schedule to prevent deterioration of oil performance. Check the engine oil following the below procedure.

Smartstream G2.5 FR T-GDi

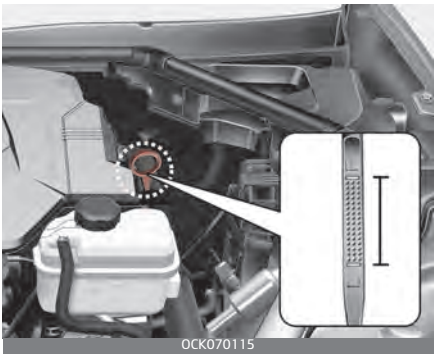

(Gasoline) 3.3 T-GDi

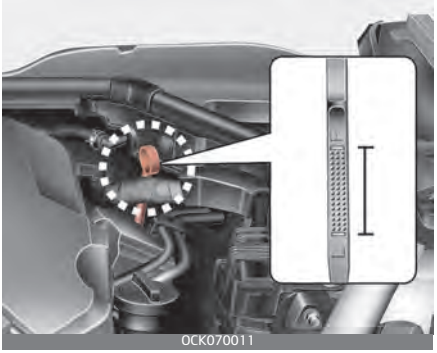

1. Be sure the vehicle is on level ground.
2. Start the engine and allow it to reach normal operating temperature.
3. Turn the engine off and wait for about 15 minutes (with oil filler cap and dipstick detached) for the oil to return to the oil pan.
4. Pull the dipstick out, wipe it clean, and reinsert it fully.

WARNING

Radiator hose

Be very careful not to touch the radiator hose when checking or adding the engine oil as it may be hot enough to burn you.

5. Pull the dipstick out again and check the level. Check if the oil level is between the F-L line, and if it is below the L line, add enough oil to bring the level to F line.

⚠ CAUTION

Replacing engine oil

Do not overfill the engine oil. It may damage the engine.

Smartstream G2.5 FR T-GDi

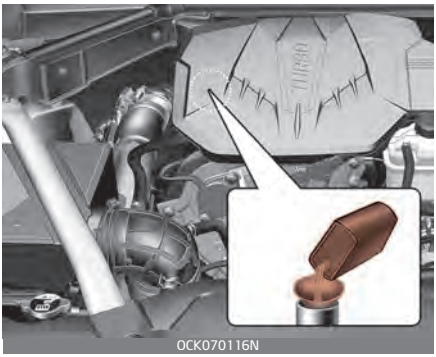

(Gasoline) 3.3 T-GDi

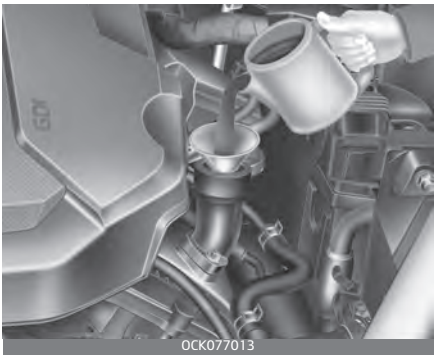

* (For Smartstream G2.5 FR T-GDi) After removing the engine cover, fill up the engine oil.

Use a funnel to help prevent oil from being spilled on engine components.

Use only the specified engine oil. (Refer to "Recommended lubricants and capacities" on page 8-7.)

- Do not spill engine oil when adding or changing engine oil. Wipe off spilled oil immediately.
- The engine oil consumption may increase while you break in a new vehicle and it will be stabilized after driving 4,000 miles (6,000 km).
- The engine oil consumption can be affected by driving habits, climate conditions, traffic conditions, oil quality, etc. Therefore, it is recommended that you inspect the engine oil level regularly and refill it if necessary.

Changing the engine oil and filter

Have engine oil and filter changed by an authorized Kia dealer according to the Maintenance Schedule at the beginning of this chapter.

- If the maintenance schedule to replace engine oil is exceeded, the engine oil performance may deteriorate, and the engine condition may be affected. Therefore, replace the engine oil according to the maintenance schedule.
- To keep the engine in optimal condition, use the recommended engine oil and filter. If the recommended engine oil and filter are not used replace it according to the maintenance schedule under severe usage conditions.
- The purpose of the maintenance schedule for engine oil replace-

ment is to prevent oil deterioration and it is irrelevant to oil consumption. Check and refill engine oil regularly.

WARNING

Used engine oil

Used engine oil may cause irritation or cancer of the skin if left in contact with the skin for prolonged periods of time. Always protect your skin by washing your hands thoroughly with soap and warm water as soon as possible after handling used oil.

NOTICE

- When the oil pressure is low due to insufficient engine oil, the Engine Oil Pressure ( ) warning light will illuminate. In addition, the enhanced engine protection system, which limits the engine's power is activated and the Malfunction Indicator Lamp ( ) will illuminate when the vehicle is driven in this state continuously. When oil pressure is restored, the Engine Oil Pressure warning light will turn off and the engine power will no longer be limited. (For Smartstream G2.5 FR T-GDi)

CAUTION

The engine oil is very hot immediately after the vehicle has been driven and can cause burns during replacement. Replace the engine oil after the engine oil has cooled down.

Engine Coolant

The high-pressure cooling system has a reservoir filled with year round antifreeze coolant. The reservoir is filled at the factory.

Check the antifreeze protection and coolant level at least once a year: at the beginning of the winter season, and before traveling to a colder climate.

⚠ CAUTION

Radiator cap

Never attempt to remove the radiator cap while the engine is operating or hot. Doing so might lead to cooling system and engine damage.

Checking the coolant level

⚠ WARNING

Removing radiator cap

Never attempt to remove the radiator cap while the engine is operating or hot. Doing so might lead to cooling system and engine damage and could result in serious personal injury from escaping hot coolant or steam.

- Turn the engine off and wait until it cools down. Use extreme care when removing the radiator cap. Wrap a thick towel around it, and turn it counterclockwise slowly to the first stop. Step back while the pressure is released from the cooling system.
  When you are sure all the pressure has been released, press down on the cap, using a thick towel, and continue turning counterclockwise to remove it.
- Even if the engine is not operating, do not remove the radiator cap or the drain plug while the engine and radiator are hot. Hot coolant and steam may still blow out under pressure, causing serious injury.

⚠ WARNING

Cooling fan

Use caution when working near the blade of the cooling fan. The electric motor (cooling fan) is controlled by engine coolant temperature, refrigerant pressure and vehicle speed. It can operate even when the engine is not running.

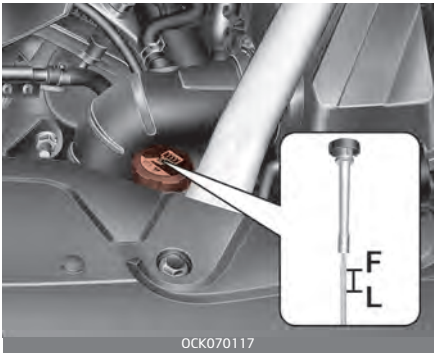

OCK070117

Check the condition and connections of all cooling system hoses and heater hoses. Replace any swollen or deteriorated hoses.

The coolant level should be filled between F and L marks on the coolant level gauge when the engine is cool.

If the coolant level is low, add enough specified coolant to provide protection against freezing and corrosion. Bring the level to F, but do not overfill. If frequent additions are required, see an authorized Kia dealer for a cooling system inspection.

✻ NOTICE

Make sure the coolant cap is properly closed after refill of coolant. Otherwise the engine could be overheated while driving.

1. Check if the radiator cap label is on straight.

Engine room front view

OJA070150L

2. Make sure that the tiny protrusions inside the coolant cap are securely interlocked.

Engine room rear view

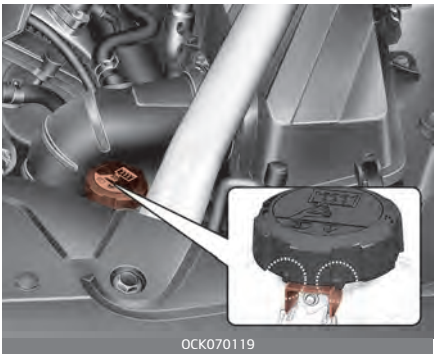
OCK070119

Recommended engine coolant

- When adding coolant, use only deionized water or soft water for your vehicle and never mix hard water in the coolant filled at the factory. An improper coolant mixture can result in serious malfunction or engine damage.

- The engine in your vehicle has aluminum engine parts and must be protected by an ethylene-glycol with phosphate based coolant to prevent corrosion and freezing.
- DO NOT USE alcohol or methanol coolant or mix them with the specified coolant.
- Do not use a solution that contains more than 60% antifreeze or less than 35% antifreeze. This would reduce the effectiveness of the solution.

For mixture percentage, refer to the following table.

Ambient Temperature	Mixture Percentage (volume)	
	Antifreeze	Water
5°F (-15°C)	35	65
-13°F (-25°C)	40	60
-31°F (-35°C)	50	50
-49°F (-45°C)	60	40

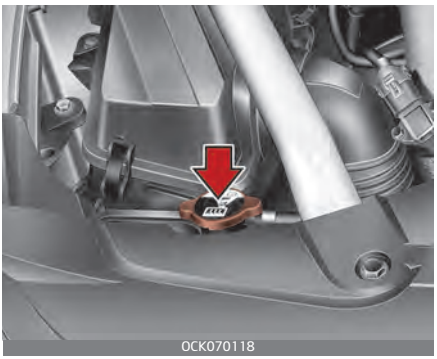

WARNING

Radiator cap

Do not remove the radiator cap when the engine and radiator are hot. Scalding hot coolant and steam may blow out under pressure which may result in serious injury.

Changing the coolant

Have the coolant changed by an authorized Kia dealer according to the Maintenance Schedule at the beginning of this chapter.

CAUTION

Put a thick cloth or fabric around the radiator cap before refilling the coolant in order to prevent the coolant from overflowing into engine parts such as the generator.

Brake fluid

Checking the brake fluid level

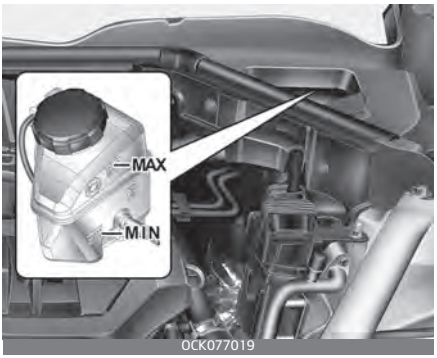

Check the fluid level in the reservoir periodically. The fluid level should be between MAX (Maximum) and MIN (Minimum) marks on the side of the reservoir.

Before removing the reservoir cap and adding brake fluid, clean the area around the reservoir cap thoroughly to prevent brake fluid contamination.

⚠ CAUTION

Proper fluid

Only use brake fluid in brake system. Small amounts of improper fluids (such as engine oil) can cause damage to the brake system.

Periodically check that the fluid level in the brake fluid reservoir is between MIN and MAX. The level will fall with accumulated mileage. This is a normal condition associated with the wear of brake linings. If the fluid level is excessively low, have the brake system checked by an authorized Kia dealer.

Use only the specified brake fluid. (Refer to "Recommended lubricants and capacities" on page 8-7.)

Never mix different types of fluid.

In the event the brake system requires frequent additions of fluid, the vehicle should be inspected by an authorized Kia dealer.

When changing and adding brake fluid, handle it carefully. Do not let it come in contact with your eyes. If brake fluid should come in contact with your eyes, immediately flush them with a large quantity of fresh tap water. Have your eyes examined by a doctor as soon as possible.

⚠ CAUTION

Brake fluid

Do not allow brake fluid to contact the vehicle's body paint, as paint damage will result.

Brake fluid, which has been exposed to open air for an extended time should never be used as its quality cannot be guaranteed. It should be disposed of properly.

⚠ CAUTION

To maintain your vehicle's best brake and ABS/ESC performance, use Kia genuine brake fluid as in the specification. (Classification : SAE J1704 DOT4 LV, ISO4925 CLASS-6, FMVSS116 DOT-4)

Washer fluid

Checking the washer fluid level

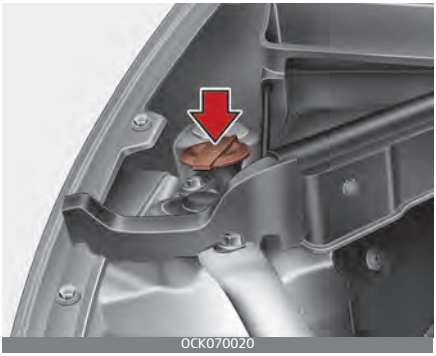

If washer fluid is insufficient, the warning message will be popped up on LCD display.

In this case, add washer fluid to the reservoir tank.

Plain water may be used if washer fluid is not available. However, use washer solvent with antifreeze characteristics in cold climates to prevent freezing.

⚠ WARNING

Flammable fluid

Do not allow the washer fluid to come in contact with open flames or sparks.The windshield washer fluid reservoir is flammable under certain circumstances. This can result in a fire.

⚠ WARNING

Coolant

- Do not use radiator coolant or antifreeze in the washer fluid reservoir.
- Radiator coolant can severely obscure visibility when sprayed on the windshield and may cause loss of vehicle control.

⚠ WARNING

Windshield fluid

Do not drink the windshield washer fluid. The windshield washer fluid is poisonous to humans and animals.

Air cleaner

Filter replacement

Smartstream G2.5 FR T-GDi

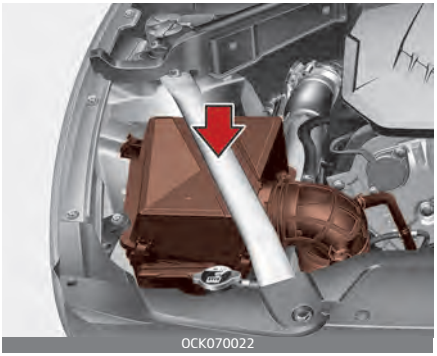

(Gasoline) 3.3 T-GDi (Passenger side)

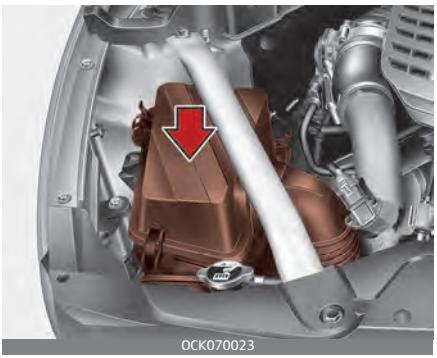

The air filter must be replaced when necessary, and should not be washed.

Have the air cleaner filter inspected or replaced by an authorized Kia dealer.

(Gasoline) 3.3 T-GDi (Driver side)

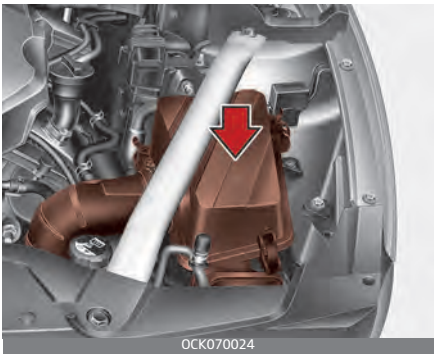

Replace the filter according to the Maintenance Schedule.

If the vehicle is operated in extremely dusty or sandy areas, replace the element more often than the usual recommended intervals. (Refer to "Maintenance under severe usage conditions - Turbo Models (For Smartstream G2.5 FR T-GDi)" on page 7-14.), "Maintenance Under Severe Usage Conditions - Turbo Models (For (Gasoline) 3.3 T-GDi)" on page 7-20.)

⚠ CAUTION

Air filter maintenance

- Do not drive with the air cleaner removed; this will result in excessive engine wear.
- When removing the air cleaner filter, be careful that dust or dirt does not enter the air intake, or damage may result.
- Use a Kia genuine part. Use of a non-genuine part could damage the air flow sensor.

Climate control air filter

Filter inspection

The climate control air filter should be replaced according to the Maintenance Schedule. If the vehicle is operated in severely air-polluted cities or on dusty rough roads for a long period, it should be inspected more frequently and replaced earlier. When you replace the climate control air filter, replace it performing the following procedure, and be careful to avoid damaging other components.

1. Open the glove box and remove the stoppers on both sides.

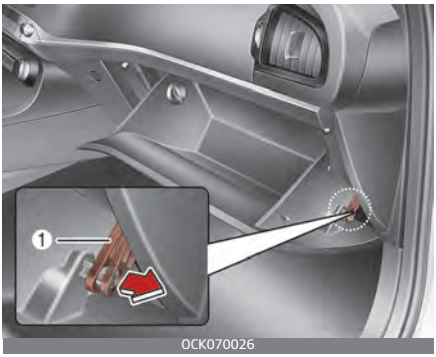

2. With the glove box open, pull the support strap (1).

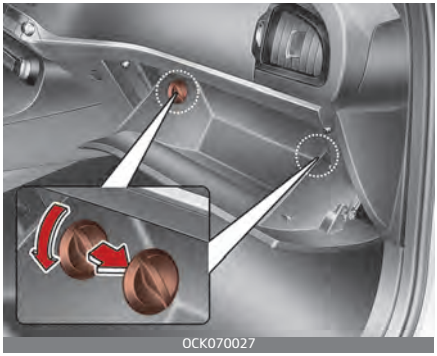

3. Remove the climate control air filter cover while pressing the lock on the left side of the cover.

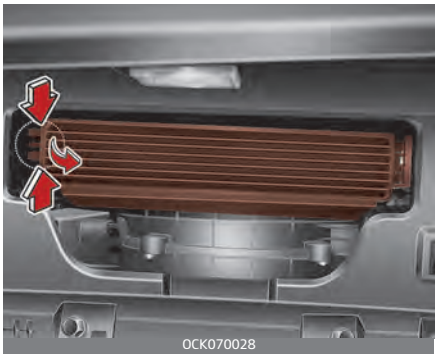

4. Replace the climate control air filter.

5. Reassemble in the reverse order of disassembly.

When replacing the climate control air filter install it properly. Otherwise, the system may produce noise and the effectiveness of the filter may be reduced.

Wiper blades

Blade inspection

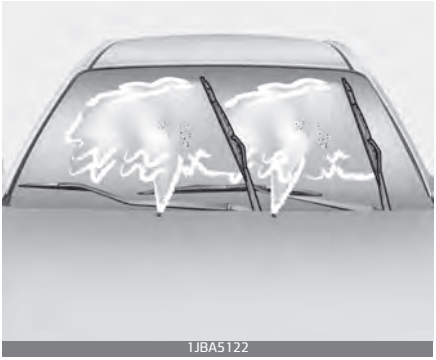

Commercial hot waxes applied by automatic car washes have been known to make the windshield difficult to clean.

Contamination of either the windshield or the wiper blades with foreign matter can reduce the effectiveness of the windshield wipers. Common sources of contamination are insects, tree sap, and hot wax treatments used by some commercial car washes. If the blades are not wiping properly, clean both the window and the blades with a good cleaner or mild detergent, and rinse thoroughly with clean water.

✻ NOTICE

Wiper blades

To prevent damage to the wiper blades, do not use gasoline, kerosene, paint thinner, or other solvents on or near them.

Blade replacement

When the wipers no longer clean adequately, the blades may be worn or cracked, and require replacement.

To prevent damage to the wiper arms or other components, do not attempt to move the wipers manually.

The use of a non-specified wiper blade could result in wiper malfunction and failure.

Front windshield wiper blade

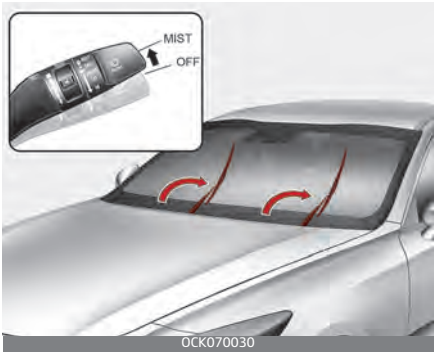

OCK070030

For your convenience, move the windshield wiper blades to the service position as follows;

After turning off the engine, move the wiper switch to the single wiping (MIST) position within 20 seconds and hold the switch more than 2 seconds until the wiper blade is in the fully up position.

⚠ CAUTION

Wiper arms

Do not allow the wiper arm to fall against the windshield, since it may chip or crack the windshield.

1. Raise the wiper arm.
2. Lift up the wiper blade clip (1). Then pull down the blade assembly (2) and remove it.

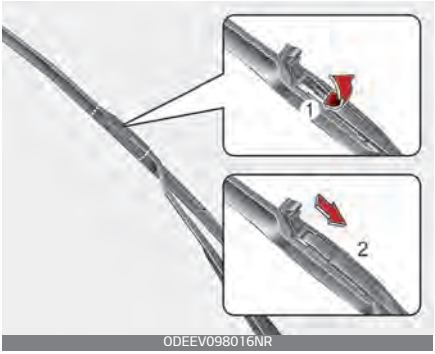

ODEEV098016NR

3. Install the new blade assembly.

ODEEV098017NR

4. Return the wiper arm on the windshield.
5. Turn ignition to the ON position and wiper arms will return to the normal operating position.

Battery

Battery replacement

OCK070031

The battery is in the trunk under the compartment cover.

When replacing the battery, disconnect the negative (–) cable (1) and remove the positive (+) battery fuse box (2).

Remove the battery mounting bracket (3).

WARNING

Touching metal surfaces in the trunk under the compartment cover

OCK070103N

Do not touch metal surfaces in the trunk under the compartment cover while the engine is operating or hot. Doing so could result in serious personal injury.

Turn the engine off and wait until it cools down or wear gloves to replace the battery from the luggage room.

For best battery service

- Keep the battery securely mounted.
- Keep the battery top clean and dry.
- Keep the terminals and connections clean, tight, and coated with petroleum jelly or terminal grease.
- Rinse any spilled electrolyte from the battery immediately with a solution of water and baking soda.
- If the vehicle is not going to be used for an extended time, disconnect the battery cables.

WARNING

Risk of explosion

Keep lit cigarettes and all other flames or sparks away from the battery.

The battery contains hydrogen -- a highly combustible gas which will explode if it comes in contact with a flame or spark.

Keep batteries out of the reach of children because batteries contain highly corrosive SULFURIC ACID and electrolytes. Do not allow battery acid to contact your skin, eyes, clothing or paint finish.

Wear eye protection when charging or working near a battery. Always provide ventilation when working in an enclosed space.

Always read the following instructions carefully when handling a battery.

If any electrolyte gets into your eyes, flush your eyes with clean water for at least 15 minutes and get immediate medical attention.

If electrolyte gets on your skin, thoroughly wash the contacted area. If you feel pain or burning sensation, get medical attention immediately.

An inappropriately disposed battery can be harmful to the environment and human health. Dispose the battery according to your local law(s) or regulation.

The battery contains lead. Do not dispose of it after use. Please return the battery to an authorized Kia dealer to be recycled.

Never attempt to recharge the battery when the battery cables are connected.

WARNING

Risk of electrocution

Never touch the electrical ignition system while the vehicle is running. This system works with high voltage which can shock you.

WARNING

Recharging Battery

Never attempt to recharge the battery when the battery cables are connected.

WARNING

Battery lead compound

Battery posts, terminals, and related accessories contain lead and lead compounds. Wash hands after handling.

NOTICE

If you connect unauthorized electronic devices to the battery, the battery may be discharged. Never use unauthorized devices.

Recharging the battery

Your vehicle has a maintenance-free, calcium-based battery.

- If the battery becomes discharged in a short time (because, for example, the headlamps or interior lamps were left on while the vehicle was not in use), recharge it by slow charging (trickle) for 10 hours.
- If the battery gradually discharges because of high electric load while the vehicle is being used, recharge it at 20-30A for two hours.

When recharging the battery, observe the following precautions:

- The battery must be removed from the vehicle and placed in an area with good ventilation.

- Do not allow cigarettes, sparks, or flame near the battery.
- Watch the battery during charging, and stop or reduce the charging rate if the battery cells begin gassing (boiling) violently or if the temperature of the electrolyte of any cell exceeds 120°F (49°C).
- Wear eye protection when checking the battery during charging.
- Disconnect the battery charger in the following order.
  1. Turn off the battery charger main switch.
  2. Unhook the negative clamp from the negative battery terminal.
  3. Unhook the positive clamp from the positive battery terminal.
- Before performing maintenance or recharging the battery, turn off all accessories and stop the engine.
- The negative battery cable must be removed first and installed last when the battery is disconnected.

⚠ CAUTION

AGM battery (if equipped)

- Absorbent Glass Mat (AGM) batteries are maintenance free and have the AGM battery serviced by a professional workshop. Kia recommends to visit an authorized Kia dealer.
  For charging your AGM battery, use only fully automatic battery chargers that are specially developed for AGM batteries.
- When replacing the AGM battery, use parts for replacement from a professional workshop.Kia recommends to visit an authorized Kia dealer.
- Do not open or remove the cap on top of the battery. This may cause leaks of internal electrolyte that could result in severe injury.

Reset items

Items should be reset after the battery has been discharged or the battery has been disconnected.

- Auto up/down window
- Sunroof
- Trip computer
- Climate control system
- Driver position memory system

Tires and wheels

Tire care

For proper maintenance, safety, and maximum fuel economy, you must always maintain recommended tire inflation pressures and stay within the load limits and weight distribution recommended for your vehicle.

Recommended cold tire inflation pressures

All tire pressures (including the spare) should be checked when the tires are cold. “Cold Tires” means the vehicle has not been driven for at least three hours or driven less than 1 mile (1.6 km).

Recommended pressures must be maintained for the best ride, top vehicle handling, and minimum tire wear.

For recommended inflation pressure refer to "Tires and wheels" on page 8-4.

All specifications (sizes and pressures) can be found on a label attached to the driver’s side center pillar.

⚠ WARNING

Checking the tire inflation pressure

Inflate your tires consistent with the instructions provided in this manual.

Regularly check the tire inflation pressure, and correct it as needed: at least twice a month and before a long trip.

If you fail to observe this precaution, you may be driving on tires with incorrect tire pressures, a condition that may not only compromise your vehicle's driving stability, but also lead to tire damage and the risk of an accident.

This risk is much higher on hot days and when driving for long periods at high speeds.

- Underinflation also results in excessive wear, poor handling and reduced fuel economy. Wheel deformation also is possible. Keep your tire pressures at the proper levels. If a tire frequently needs refilling, have it checked by an authorized Kia dealer.
- Overinflation produces a harsh ride, excessive wear at the center of the tire tread, and a greater possibility of damage from road hazards.
- Warm tires normally exceed recommended cold tire pressures by 4 to 6 psi (28 to 41 kPa). Do not release air from warm tires to adjust the pressure or the tires will be underinflated.
- Be sure to reinstall the tire inflation valve caps. Without the valve cap, dirt or moisture could get into the valve core and cause air leakage. If a valve cap is missing, install a new one as soon as possible.

Tire pressure

Always observe the following:

- Check tire pressure when the tires are cold. (After vehicle has been parked for at least three hours or hasn't been driven more than 1 mile (1.6 km) since startup.)
- Check the pressure of your spare tire each time you check the pressure of other tires.
- Never overload your vehicle. Be careful not to overload a vehicle luggage rack if your vehicle is equipped with one.

⚠ WARNING

Tire Inflation

Overinflation or underinflation can reduce tire life, adversely affect vehicle handling, and lead to sudden tire failure. This could result in loss of vehicle control and potential injury.

Checking tire inflation pressure

Check your tires once a month or more.

Also, check the tire pressure of the spare tire.

How to check

Use a good quality gauge to check tire pressure. You can not tell if your tires are properly inflated simply by looking at them. Radial tires may look properly inflated even when they're underinflated.

Check the tire's inflation pressure when the tires are cold. – "Cold" means your vehicle has been sitting for at least three hours or driven no more than 1 mile (1.6 km).

Remove the valve cap from the tire valve stem. Press the tire gauge

firmly onto the valve to get a pressure measurement. If the cold tire inflation pressure matches the recommended pressure on the tire and loading information label, no further adjustment is necessary. If the pressure is low, add air until you reach the recommended amount.

If you overfill the tire, release air by pushing on the metal stem in the center of the tire valve. Recheck the tire pressure with the tire gauge. Be sure to put the valve caps back on the valve stems. They help prevent leaks by keeping out dirt and moisture.

- Inspect your tires frequently for proper inflation as well as wear and damage. Always use a tire pressure gauge.
- Tires with too much or too little pressure wear unevenly causing poor handling, loss of vehicle control, and sudden tire failure leading to accidents, injuries, and even death. The recommended cold tire pressure for your vehicle can be found in this manual and on the tire label located on the driver's side center pillar.
- Remember to check the pressure of your spare tire. Kia recommends that you check the spare every time you check the pressure of the other tires on your vehicle.

Tire rotation

To equalize tread wear, it is recommended that the tires be rotated every 8,000 miles (13,000km) (for SmartstreamG2.5 T-GDi), 6,000 miles (10,000 km) (for (Gasoline) 3.3 T-GDi) or sooner if irregular wear develops.

During rotation, check the tires for correct balance.

When rotating tires, check for uneven wear and damage. Abnormal wear is usually caused by incorrect tire pressure, improper wheel alignment, out of- balance wheels, severe braking or severe cornering. Look for bumps or bulges in the tread or side of tire. Replace the tire if you find either of these conditions. Replace the tire if fabric or cord is visible. After rotation, be sure to bring the front and rear tire pressures to specification and check lug nut tightness.

Refer to "Tires and wheels" on page 8-4.

18inch tire

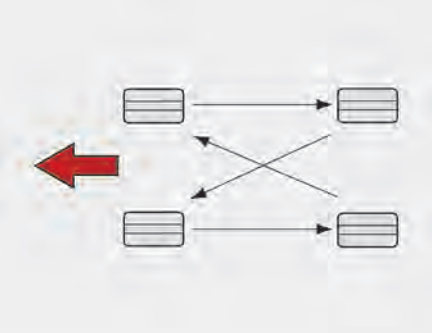

OJA070097

19inch tire

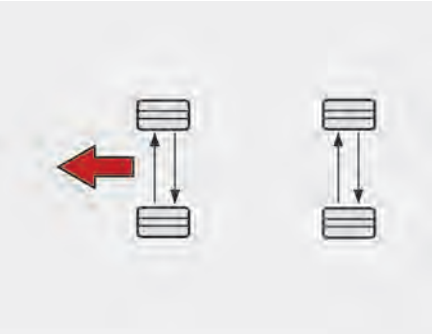

OCK070133

Disc brake pads should be inspected for wear whenever tires are rotated.

Rotate radial tires that have an asymmetric tread pattern only from front to rear and not from right to left.

WARNING

Mixing tires

- Do not use the compact spare tire (if equipped) for tire rotation.
- Do not mix bias ply and radial ply tires under any circumstances. This may cause unusual handling characteristics.

Wheel alignment and tire balance

The wheels on your vehicle were aligned and balanced carefully at the factory to give you the longest tire life and best overall performance.

In most cases, you will not need to have your wheels aligned again. However, if you notice unusual tire wear or your vehicle pulling one way or the other, the alignment may need to be reset.

If you notice your vehicle vibrating when driving on a smooth road, your wheels may need to be rebalanced.

CAUTION

Wheel weight

Improper wheel weights can damage your vehicle's aluminum wheels. Use only approved wheel weights.

Flat Spots

If a vehicle is parked/not operated for a long period of time, tires may develop “flat spots”. Once the vehicle is driven again, these flat spots may cause a vibration which typically disappears gradually as the tires warm up and regain their original shape. To minimize tire flat

spots developing during periods of extended storage, inflate the tires to the maximum pressure as indicated on the tire's sidewall. When the vehicle is made ready to drive again, lower the tire pressure to the recommended levels as shown on the Tire and Loading Information label in the driver's side center pillar for your vehicle (Refer to "Tire specification and pressure label" on page 8-11).

Tire replacement

If the tire is worn evenly, a tread wear Indicator (A) will appear as a solid band across the tread. This shows there is less than 1/16 inch (1.6 mm) of tread left on the tire. Replace the tire when this happens.

Do not wait for the band to appear across the entire tread before replacing the tire.

The ABS (Anti-lock Brake System) works by comparing the speed of the wheels. The tire size affects wheel speed. When replacing tires, all 4 tires must use the same size originally supplied with the vehicle. Using tires of a different size can cause the ABS and ESC (Electronic Stability Control) to work irregularly.

NOTICE

We recommend that when replacing tires, use the same which were originally supplied with the vehicle. If not, driving performance could be altered.

Compact spare tire replacement

A compact spare tire has a shorter tread life than a regular size tire. Replace it when you can see the tread wear indicator bars on the tire. The replacement compact spare tire should be the same size and design tire as the one provided with your new vehicle and should be mounted on the same compact spare tire wheel. The compact spare tire is not designed to be mounted on a regular size wheel, and the compact spare tire wheel is not designed for mounting a regular size tire.

Wheel replacement

When replacing the metal wheels for any reason, make sure the new wheels are equivalent to the original

factory units in diameter, rim width and offset.

A wheel that is not the correct size may adversely affect wheel and bearing life, braking and stopping abilities, handling characteristics, ground clearance, body-to-tire clearance, snow chain clearance, speedometer and odometer calibration, headlight aim and bumper height.

⚠ CAUTION

Wheel

Wheels that do not meet Kia's specifications may fit poorly and result in damage to the vehicle or unusual handling and poor vehicle control.

Tire traction

Tire traction can be reduced if you drive on worn tires, tires that are improperly inflated or on slippery road surfaces. Tires should be replaced when tread wear indicators appear. Slow down whenever there is rain, snow or ice on the road, to reduce the possibility of losing control of the vehicle.

Tire maintenance

In addition to proper inflation, correct wheel alignment helps to decrease tire wear. If you find a tire is worn unevenly, have your dealer check the wheel alignment.

When you have new tires installed, make sure they are balanced. This will increase vehicle ride comfort and tire life. Additionally, a tire should always be rebalanced if it is removed from the wheel.

Tire sidewall labeling

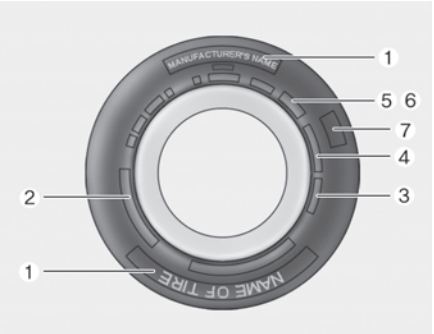

OJF085008L

This information identifies and describes the fundamental characteristics of the tire and also provides the tire identification number (TIN) for safety standard certification. The TIN can be used to identify the tire in case of a recall.

1. Manufacturer or brand name

Manufacturer or Brand name is shown.

2. Tire size designation

A tire's sidewall is marked with a tire size designation. You will need this

information when selecting replacement tires for your car. The following explains what the letters and numbers in the tire size designation mean.

Example tire size designation:

(These numbers are provided as an example only; your tire size designator could vary depending on your vehicle.)

P205/55R16 89H

P – Applicable vehicle type (tires marked with the prefix "P" are intended for use on passenger vehicles or light trucks; however, not all tires have this marking).

205 – Tire width in millimeters.

55 – Aspect ratio. The tire's section height as a percentage of its width.

R – Tire construction code (Radial).

16 – Rim diameter in inches.

89 – Load Index, a numerical code associated with the maximum load the tire can carry.

H – Speed Rating Symbol. See the speed rating chart in this section for additional information.

Wheel size designation

Wheels are also marked with important information that you need if you ever have to replace one. The following explains what the letters and numbers in the wheel size designation mean.

Example wheel size designation:

6.0JX16

6.0 – Rim width in inches.

J – Rim contour designation.

16 – Rim diameter in inches.

Tire speed ratings

The chart below lists many of the different speed ratings currently being used for passenger vehicles. The speed rating is part of the tire size designation on the sidewall of the tire. This symbol corresponds to that tire's designed maximum safe operating speed.

Speed Rating Symbol	Maximum Speed
S	112 mph (180 km/h)
T	118 mph (190 km/h)
H	130 mph (210 km/h)
V	149 mph (240 km/h)
W	168 mph (270 km/h)
Y	186 mph (300 km/h)
Z	Above 149 mph (240 km/h)

3. Checking tire life (TIN : Tire Identification Number)

Any tires that are over 6 years old, based on the manufacturing date, (including the spare tire) should be replaced by new ones. You can find the manufacturing date on the tire sidewall (possibly on the inside of the wheel), displaying the DOT Code.

The DOT Code is a series of numbers on a tire consisting of numbers and English letters. The manufacturing date is designated by the last four digits (characters) of the DOT code.

DOT : XXXX XXXX 0000

The front part of the DOT means a plant code number, tire size and tread pattern and the last four numbers indicate week and year manufactured.

For example:

DOT XXXX XXXX 1621 represents that the tire was produced in the 16th week of 2021.

⚠ WARNING

Tire age

Replace tires within the recommended time frame. Failure to replace tires as recommended can result in sudden tire failure, which could lead to a loss of control and an accident.

4. Tire ply composition and material

The number of layers or plies of rubber- coated fabric in the tire. Tire manufacturers also must indicate the materials in the tire, which include steel, nylon, polyester, and others. The letter "R" means radial ply construction; the letter "D" means diagonal or bias ply construction; and the letter "B" means belted-bias ply construction.

5. Maximum permissible inflation pressure

This number is the greatest amount of air pressure that should be put in the tire. Do not exceed the maximum permissible inflation pressure. Refer to the Tire and Loading Information label for recommended inflation pressure.

6. Maximum load rating

This number indicates the maximum load in kilograms and pounds that can be carried by the tire. When replacing the tires on the vehicle, always use a tire that has the same load rating as the factory installed tire.

7. Uniform Tire Quality Grading

Quality grades can be found where applicable on the tire sidewall between tread shoulder and maximum section width.

For example:

Treadwear 200

Traction AA

Temperature A

Tread wear

The tread wear grade is a comparative rating based on the wear rate of the tire when tested under controlled conditions on a specified government test course. For example, a tire graded 150 would wear one-and-ahalf times (1½) as well on the government course as a tire graded 100.
The relative performance of tires depends upon the actual conditions of their use, however, and may depart significantly from the norm due to variations in driving habits, service practices and differences in road characteristics and climate.
Tires degrade over time, even when they are not being used. Regardless of the remaining tread, we recommend that tires be replaced after approximately six (6) years of normal service. Heat caused by hot climates or frequent high loading conditions can accelerate the aging process.
These grades are molded on the side-walls of passenger vehicle tires. The tires available as standard or optional equipment on your vehicles may vary with respect to grade.

Traction - AA, A, B & C

The traction grades, from highest to lowest, are AA, A, B and C. Those grades represent the tires ability to stop on wet pavement as measured under controlled conditions on specified government test surfaces of asphalt and concrete. A tire marked C may have poor traction performance.
The traction grade assigned to this tire is based on straight-ahead braking traction tests, and does not include acceleration, cornering, hydroplaning, or peak traction characteristics.

Temperature -A, B & C

The temperature grades are A (the highest), B and C representing the tire's resistance to the generation of heat and its ability to dissipate heat when tested under controlled conditions on a specified indoor laboratory test wheel.
Sustained high temperature can cause the material of the tire to degenerate and reduce tire life, and excessive temperature can lead to sudden tire failure. The grade C corresponds to a level of performance which all passenger car tires must meet under the Federal Motor Vehicle Safety Standard No. 109. Grades B and A represent higher levels of performance on the laboratory test wheel than the minimum required by law.

Tire terminology and definitions

Air Pressure: The amount of air inside the tire pressing outward on the tire. Air pressure is expressed in kilopascal (kPa) or pounds per square inch (psi).

Accessory Weight: This means the combined weight of optional acces-

sories. Some examples of optional accessories are, automatic transmission, power seats, and air conditioning.

Aspect Ratio: The relationship of a tire's height to its width.

Belt: A rubber coated layer of cords that is located between the plies and the tread. Cords may be made from steel or other reinforcing materials.

Bead: The tire bead contains steel wires wrapped by steel cords that hold the tire onto the rim.

Bias Ply Tire: A pneumatic tire in which the plies are laid at alternate angles less than 90 degrees to the centerline of the tread.

Cold Tire Pressure: The amount of air pressure in a tire, measured in kilopascals (kPa) or pounds per square inch (psi) before a tire has built up heat from driving.

Curb Weight: This means the weight of a motor vehicle with standard and optional equipment including the maximum capacity of fuel, oil and coolant, but without passengers and cargo.

DOT Markings: A code molded into the sidewall of a tire signifying that the tire is in compliance with the U.S. Department of Transportation motor vehicle safety standards. The DOT code includes the Tire Identification Number (TIN), an alphanumeric designator which can also identify the tire manufacturer, production plant, brand and date of production.

GVWR: Gross Vehicle Weight Rating

GAWR FRT: Gross Axle Weight Rating for the Front Axle.

GAWR RR: Gross Axle Weight Rating for the Rear axle.

Intended Outboard Sidewall: The side of an asymmetrical tire, that must always face outward when mounted on a vehicle.

Kilopascal (kPa): The metric unit for air pressure.

Light truck(LT) tire: A tire designated by its manufacturer as primarily intended for use on lightweight trucks or multipurpose passenger vehicles.

Load Index: An assigned number ranging from 1 to 279 that corresponds to the load carrying capacity of a tire.

Load ratings: The maximum load that a tire is rated to carry for a given inflation pressure.

Maximum Inflation Pressure: The maximum air pressure to which a cold tire may be inflated. The maximum air pressure is molded onto the sidewall.

Maximum Load Rating: The load rating for a tire at the maximum permissible inflation pressure for that tire.

Maximum Loaded Vehicle Weight: The sum of curb weight; accessory weight; vehicle capacity weight; and production options weight.

Normal Occupant Weight: The number of occupants a vehicle is designed to seat multiplied by 150 lbs. (68kg).

Occupant Distribution: Designated seating positions.

Outward Facing Sidewall: The side of a asymmetrical tire that has a particular side that faces outward when mounted on a vehicle. The outward facing sidewall bears white lettering or bears manufacturer, brand, and/or model name molding that is higher or deeper than the same moldings on the inner facing sidewall.

Passenger (P-Metric) Tire: A tire used on passenger cars and some light duty trucks and multipurpose vehicles.

Ply: A layer of rubber-coated parallel cords

Pneumatic tire: A mechanical device made of rubber, chemicals, fabric and steel or other materials, that, when mounted on an automotive wheel, provides the traction and contains the gas or fluid that sustains the load.

Production options weight: The combined weight of installed regular production options weighing over 5 lb.(2.3 kg) in excess of the standard items which they replace, not previously considered in curb weight or accessory weight, including heavy duty brakes, ride levelers, roof rack, heavy duty battery, and special trim.

Recommended Inflation Pressure: Vehicle manufacturer's recommended tire inflation pressure and shown on the tire placard.

Radial Ply Tire: A pneumatic tire in which the ply cords that extend to the beads are laid at 90 degrees to the centerline of the tread.

Rim: A metal support for a tire and upon which the tire beads are seated.

Sidewall: The portion of a tire between the tread and the bead.

Speed Rating: An alphanumeric code assigned to a tire indicating the maximum speed at which a tire can operate.

Traction: The friction between the tire and the road surface. The amount of grip provided.

Tread: The portion of a tire that comes into contact with the road.

Treadwear Indicators: Narrow bands, sometimes called "wear bars," that show across the tread of a tire when only 1/16 inch of tread remains.

UTQGS: Uniform Tire Quality Grading Standards, a tire information system that provides consumers with ratings for a tire's traction, temperature and treadwear. Ratings are determined by tire manufacturers using government testing procedures. The ratings are molded into the sidewall of the tire.

Vehicle Capacity Weight: The number of designated seating positions multiplied by 150 lbs. (68kg) plus the rated cargo and luggage load.

Vehicle Maximum Load on the Tire: Load on an individual tire due to curb and accessory weight plus maximum occupant and cargo weight.

Vehicle Normal Load on the Tire: Load on an individual tire that is determined by distributing to each axle its share of the curb weight, accessory weight, and normal occupant weight and driving by 2.

Vehicle Placard: A label permanently attached to a vehicle showing the original equipment tire size and recommended inflation pressure.

All season tires

Kia specifies all season tires on some models to provide good performance for use all year round, including snowy and icy road conditions. All season tires are identified by ALL SEASON and/or M+S (Mud and Snow) on the tire sidewall. Snow tires have better snow traction than all season tires and may be more appropriate in some areas.

Summer tires

Kia specifies summer tires on some models to provide superior performance on dry roads. Summer tire performance is substantially reduced in snow and ice. Summer tires do not have the tire traction rating M+S (Mud and Snow) on the tire side wall. If you plan to operate your vehicle in snowy or icy conditions, Kia recommends the use of snow tires or all season tires on all four wheels.

⚠ WARNING

Do not use summer tires at temperatures below 45°F (7°C) or when driving on snow or ice. At temperatures below 45°F (7°C), summer tires can lose elasticity, and therefore traction and braking power as well. Change the tires on your vehicle to winter or all-weather tires of the same size as the standard tires

of the vehicle. Both types of tires are identified by the M+S (Mud and Snow) marking. Using summer tires at very cold temperatures could cause cracks to form, thereby damaging the tires permanently.

Snow tires

If you equip your car with snow tires, they should be the same size and have the same load capacity as the original tires. Snow tires should be installed on all four wheels; otherwise, poor handling may result.

Snow tires should carry 4 psi (28 kPa) more air pressure than the pressure recommended for the standard tires on the tire label on the driver's side of the center pillar, or up to the maximum pressure shown on the tire sidewall, whichever is less.

Do not drive faster than 75 mph (120 km/h) when your vehicle is equipped with snow tires.

Tire chains

Tire chains, if necessary, should be installed on the rear wheels.

Be sure that the chains are installed in accordance with the manufacturer's instructions.

To minimize tire and chain wear, do not continue to use tire chains when they are no longer needed.

- When driving on roads covered with snow or ice, drive at less than 20 mph (30 km/h).
- Use AutoSock fabric snow chain.
- If you hear noise caused by chains contacting the body, retighten the chain to avoid contact with the vehicle body.
- To prevent body damage, retighten the chains after driving 0.3~0.6 miles (0.5~1.0 km).

Radial-ply tires

Radial-ply tires provide improved tread life, road hazard resistance and smoother high speed ride. The radial- ply tires used on this vehicle are of belted construction and are selected to complement the ride and handling characteristics of your vehicle.

Radial-ply tires have the same load carrying capacity as bias-ply or bias belted tires of the same size and use the same recommended inflation pressure. Mixing of radial-ply tires with bias-ply or bias belted tires is not recommended. Any combinations of radial-ply and bias-ply or bias belted tires when used on the same vehicle will seriously deteriorate vehicle handling. The best rule to follow is: identical radial-ply

tires should always be used as a set of four.

Longer wearing tires can be more susceptible to irregular tread wear. It is very important to follow the tire rotation interval shown in this section to achieve the tread life potential of these tires.

Cuts and punctures in radial-ply tires are repairable only in the tread area, because of sidewall flexing. Consult your tire dealer for radial-ply tire repairs.

Low aspect ratio tire (if equipped)

Low aspect ratio tires, whose aspect ratio is lower than 50, are provided for sporty looks.

Because the low aspect ratio tires are optimized for handling and braking, it may be more uncomfortable to ride in and there is more noise compare with normal tires.

⚠ CAUTION

Because the sidewall of the low aspect ratio tire is shorter than the normal, the wheel and tire of the low aspect ratio tire is easier to be damaged. So, follow the instructions below.

- When driving on a rough road or off road, drive cautiously because tires and wheels may be damaged. And after driving, inspect tires and wheels.
- When passing over a pothole, speed bump, manhole, or curb stone, drive slowly so that the tires and wheels are not damaged.
- If the tire is impacted, we recommend that you inspect the tire condition or contact an authorized Kia dealer.
- To prevent damage to the tire, inspect the tire condition and pressure every 1,900 miles (3,000 km).
- It is not easy to recognize the tire damage with your own eyes. But if there is the slightest hint of tire damage, even though you cannot see it, have the tire checked or replaced because the tire damage may cause air leakage from the tire.
- If the tire is damaged by driving on a rough road, off road, pothole, manhole, or curb stone, it will not be covered by the warranty.
- You can find out the tire information on the tire sidewall.

Fuses

Blade type / Cartridge type / Multi fuse / Fusible link

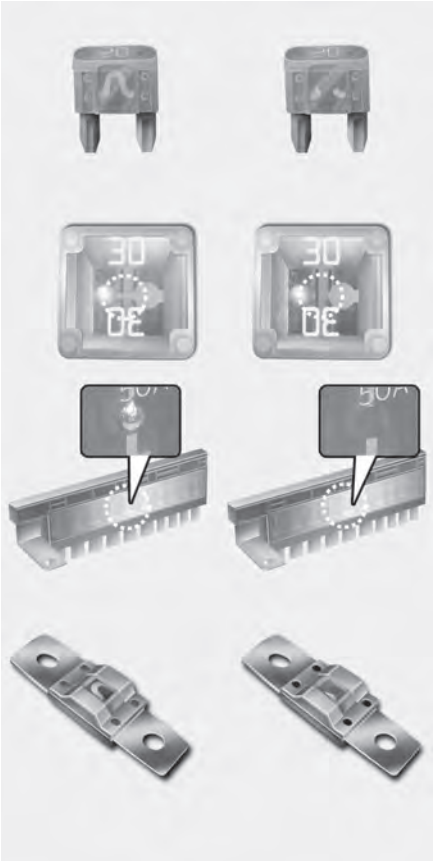

OCK077071

* Left side : Normal , Right side : Blown

A vehicle's electrical system is protected from electrical overload damage by fuses.

This vehicle has 4 (or 5) fuse panels, one located in the driver's side panel bolster, the other in the engine compartment near the battery.

If any of your vehicle's lights, accessories, or controls do not work, check the appropriate circuit fuse. If a fuse has blown, the element inside the fuse will melt.

If the electrical system does not work, first check the driver's side fuse panel.

Always replace a blown fuse with one of the same rating.

If the replacement fuse blows, this indicates an electrical problem. Avoid using the system involved and immediately consult an authorized Kia dealer.

Three kinds of fuses are used: blade type for lower amperage rating, cartridge type, and multi fuse for higher amperage ratings.

WARNING

Fuse replacement

- Never replace a fuse with anything but another fuse of the same rating.
- A higher capacity fuse could cause damage and possibly a fire.
- Never install a wire or aluminum foil instead of the proper fuse – even as a temporary repair. It may cause extensive wiring damage and a possible fire.

- Do not arbitrarily modify or add-on electric wiring to the vehicle.

⚠ CAUTION

Do not use a screwdriver or any other metal object to remove fuses because it may cause a short circuit and damage the system.

✻ NOTICE

- When replacing fuse, turn the ignition "OFF" and turn off switches of all electrical devices then remove battery (-) terminal.
- The actual fuse/relay panel label may differ from equipped items.

⚠ WARNING

Electrical Fire

Always ensure replacements fuses and relays are securely fastened when installed. Failure to do so can result in a vehicle fire.

⚠ CAUTION

- When replacing a blown fuse or relay, make sure the new fuse or relay fits tightly into the clips. Failure to tightly install the fuse or relay may cause damage to the wiring and electric systems.
- Do not remove fuses, relays and terminals fastened with bolts or nuts.The fuses, relays and terminals may not be fastened correctly which may cause vehicle damage.

⚠ CAUTION

- Do not input any other objects except fuses or relays into fuse/relay terminals such as a driver or wiring. It may cause contact failure and system malfunction.
- Do not plug in screwdrivers or aftermarket wiring into the terminal originally designed for fuse and relays only. The electrical system and wiring of the vehicle interior may be damaged or burned due to contact failure.
- If you directly connect the wire on the taillight or replace the bulb which is over the regulated capacity to install trailers etc., the inner junction block can get burned.

⚠ CAUTION

Visually inspect the battery cap to ensure it is securely closed. If the battery cap is not securely closed, moisture may enter the system and damage the electrical components.

⚠ WARNING

Electrical wiring repairs

All electrical repairs should be performed by authorized Kia dealerships using approved Kia parts. Using other wiring components, especially when retrofitting AVN or theft alarm system, remote engine control, car phone or radio may cause vehicle damage and increase the risk of a vehicle fire.

✻ NOTICE

Remodeling Prohibited

Do not rewire your vehicle in any way as doing so may affect the performance of several safety features in your vehicle. Rewiring your vehicle may also void your warranty and cause you to be responsible for any subsequent vehicle damage which may result.

✻ NOTICE

Window tinting precaution

Window tint (especially metallic film) might cause communication disorder or poor radio reception, and malfunction of the automatic lighting system due to excessive change of illumination inside the vehicle. The solution used might also flow into electric, electronic devices causing disorder and failure.

Inner panel fuse replacement

1. Turn the ignition switch and all other switches off.
2. Open the fuse panel cover.

If the switch is located in the "OFF" position, a caution indicator will be displayed in the cluster.

3. Pull the suspected fuse straight out. Use the removal tool provided on the engine compartment fuse panel cover.

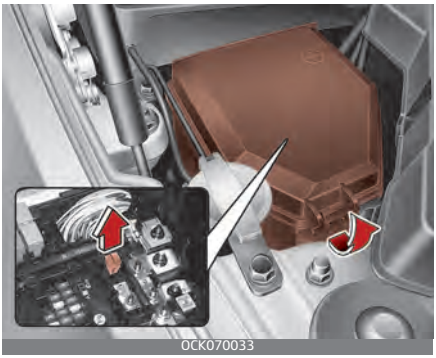

4. Check the removed fuse; replace it if it is blown.
   Spare fuses are provided in the engine compartment fuse panel.

5. Push in a new fuse of the same rating, and make sure it fits tightly in the clips.

If it fits loosely, consult an authorized Kia dealer.

If you do not have a spare, use a fuse of the same rating from a circuit you may not need for operating the vehicle, such as the power outlet fuse.

If the head lamp, turn signal lamp, stop signal lamp, fog lamp, DRL, tail lamp, HMSL do not work and the fuses are OK, check the fuse panel in the engine compartment. If a fuse is blown, it must be replaced.

NOTICE

If the headlamp, fog lamp, turn signal lamp, or tail lamp malfunction even without any problem to the lamps, have the vehicle checked by an authorized Kia dealer for assistance.

Fuse switch

Always set the fuse switch to the ON position before using the vehicle.

If you move the switch to the OFF position, some items such as audio and digital clock must be reset and transmitter (or smart key) may not work properly. When the switch is Off, the caution indicator will be displayed on the instrument cluster.

Always place the fuse switch in the ON position while driving the vehicle.

If the switch is located in the “OFF” position, a caution indicator will be displayed in the cluster.

CAUTION

Fuse Panel Covers

The contact points of the switches may wear out with excessive use. Please refrain from excessive use of the switches (except for long-term parking for over 1 month).

Engine compartment fuse replacement

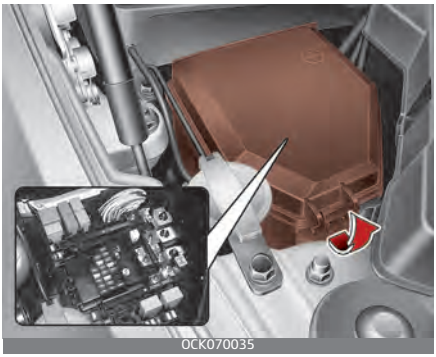
OCK070035

1. Turn the ignition switch and all other switches off.
2. Remove the fuse panel cover by pressing the tab and pulling the cover up. When the blade type fuse is disconnected, remove it by using the clip designed for changing fuses located in the engine compartment fuse box. Upon removal, securely insert reserve fuse of the same rating.
3. Check the removed fuse; replace it if it is blown. To remove or insert the fuse, use the fuse puller in the engine compartment fuse panel.
4. Push in a new fuse of the same rating, and make sure it fits tightly in the clips. If it fits loosely, consult an authorized Kia dealer.

⚠ CAUTION

Always securely install the fuse panel cover in the engine compartment to protect against electrical failure which may occur from water contact. Listen for the audible clicking sound to ensure fuse panel cover is securely fastened.

Multi fuse

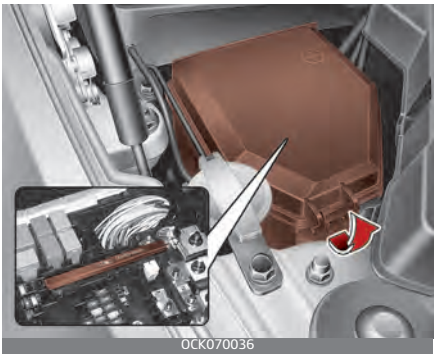
OCK070036

If the multi fuse is blown, it must beremoved as follows:

1. Turn off the engine.
2. Disconnect the negative battery cable.
3. Remove the nuts shown in the picture above.
4. Replace the fuse with a new one of the same rating.
5. Reverse these steps to reinstall the multi fuse.

✻ NOTICE

Do not disassemble nor assemble the multi fuse when it is secured with nuts and bolts. Incorrect or partial assembly torque may cause a fire. Have the vehicle checked by an authorized Kia dealer.

Main fuse

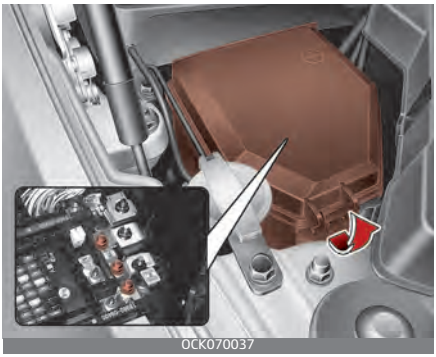
OCK070037

If the main fuse is blown, it must be removed as follows:

1. Turn off the engine.
2. Disconnect the negative battery cable.
3. Remove the nuts shown in the picture above.
4. Replace the fuse with a new one of the same rating.
5. Reverse these steps to reinstall the main fuse.

NOTICE

The electronic system may not function correctly even when the engine compartment and internal fuse box's individual fuses are not disconnected. In such case the cause of the problem may be disconnection of the main fuse.

Since the main fuse is designed more intricately than other parts, have the vehicle checked by an authorized Kia dealer.

Fuse/relay panel description

Driver's side fuse panel

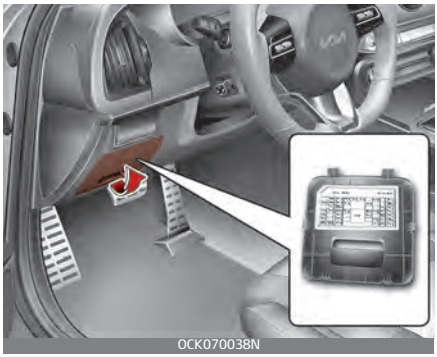
OCK070038N

Engine compartment fuse panel

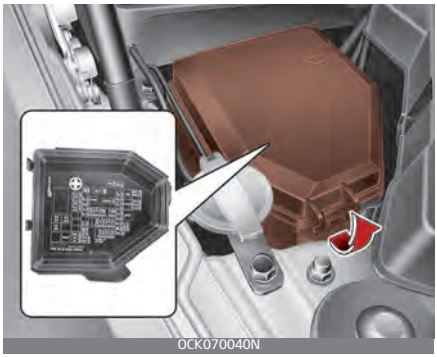
OCK070040N

Rear fuse box panel

OCK070043

Battery box fuse panel

Inside the fuse/relay panel covers, you can find the fuse/relay label describing fuse/relay name and capacity.

NOTICE

Not all fuse panel descriptions in this manual may be applicable to your vehicle. It is accurate at the time of printing. When you inspect the fuse panel in your vehicle, refer to the fuse panel label.

Driver's side fuse panel

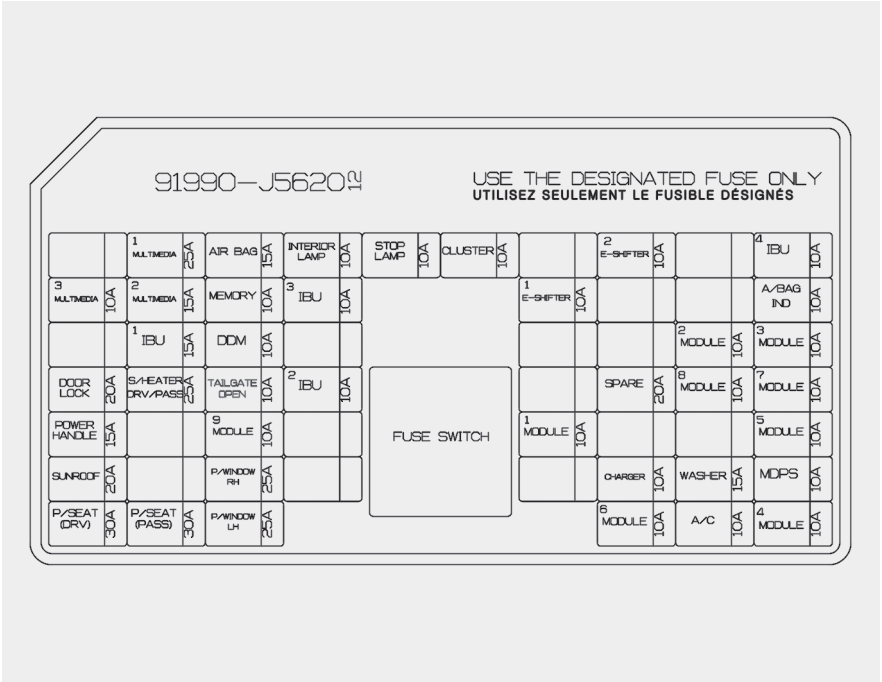

OCK070039N

Instrument panel (Driver's side fuse panel)

Fuse Name	Fuse rating	Circuit Protected
MULTI MEDIA 1	25A	Low DC-DC Converter (Audio)
AIR BAG	15A	SRS (Supplemental Restraint System) Control Module, Passenger Occupant Detection Sensor
ROOM LAMP	10A	Overhead Console Lamp, Room Lamp, Vanity Lamp Switch Left Handle side/Right Handle side, Luggage Lamp Left Handle side/Right Handle side, Glove Box Lamp, Driver/Passenger Door Lamp, Driver/Passenger Foot Lamp
STOP LAMP	10A	IBU, Stop Lamp Switch
CLUSTER	10A	Instrument Cluster, Head-Up Display
E-SHIFTER 2	10A	Electronic Auto Transmission Shift Lever (IG1)

Fuse Name	Fuse rating	Circuit Protected
IBU 4	10A	IBU (IG1)
MULTI MEDIA 3	10A	Instrument Cluster, Head-Up Display, Air Conditioner Switch, Wireless Charger
MULTI MEDIA 2	15A	Audio or A/V & Navigation Head Unit
MEMORY	10A	Air Conditioner Control Module, Air Conditioner Switch, Security Indicator, Head-Up Display
IBU 3	10A	IBU (B+)
E-SHIFTER 1	10A	Electronic Auto Transmission Shift Lever (B+)
AIR BAG IND	10A	Instrument Cluster, Passenger/Rear Seat Belt Reminder Indigator
IBU 1	15A	IBU (B+)
DRIVER DOOR MODULE	10A	Driver Door Module, Driver/Passenger Power Outside Mirror
MODULE 2	10A	IBU (IG2)
MODULE 3	10A	Auto Transmission Shift Lever Switch, Driver Door Module, Stop Lamp Switch
DOOR LOCK	20A	Door Lock Relay, Door Unlock Relay
SEAT HEATER	25A	Front Air Ventilation Seat Control Module, Front Seat Warmer Control Module
TAILGATE	10A	Tail Gate Lid Relay, Fuel Lid Relay, Crash Pad Switch
IBU 2	10A	IBU (B+ (ESCL)), Rain Sensor
MODULE 8	10A	Cooling Fan Controller (BLDC Motor)
MODULE 7	10A	IBU, AWD (All Wheel Drive) ECM (Electronic Control Module), Auto Transmission Shift Lever Indicator, Console Switch (Front/Upper), SVM (Surround View Monitor), Crash Pad Switch, Steering Angle Sensor, Steering Tilt & Telescopic Module, ESC (Electronic Stability Control) Unit, Multi-Function Camera Unit, Front Radar
POWER HANDLE	15A	Steering Tilt & Telescopic Module
MODULE 9	10A	Driver Air Lumbar Control Unit
MODULE 1	10A	Data Link Connector, Console Switch (Upper), Driver/Passenger/Door Mood Lamp, Mood Lamp (Garnish), Mood Lamp Monitor, Hazard Switch, Mood Lamp Unit

Fuse Name	Fuse rating	Circuit Protected
MODULE 5	10A	Air Conditioner Control Module, Air Conditioner Switch, Audio, A/V & Navigation Head Unit, Data Link Connect, Head Lamp Left Handle side/Right Handle side, Low DC-DC Converter (Audio/AMP (Amplifier)), Electro Chromic Mirror, AMP (Amplifier), Driver Integrated memory system Control Module, Front Air Ventilation Seat Control Module, Front/Rear Seat Warmer Control Module, Wireless Charger
SUNROOF	20A	Sunroof Control Unit (Glass)
PASSENGER POWER WINDOW	25A	Passenger Safety Power Window Module, Rear Safety Power Window Module Right Handle side, Rear Door Module Right Handle side
CHARGER	10A	Front/Rear USB Charger, Front Power Outlet (Cigar)
WASHER	15A	Multifunction Switch
MDPS	10A	MDPS (Motor Driven Power Steering) Unit
DRIVER POWER SEAT	30A	Driver Integrated memory system Control Module, Driver Seat Manual Switch
PASSENGER POWER SEAT	30A	Passenger Seat Manual Switch
DRIVER POWER WINDOW	25A	Driver Power Window Module, Rear Power Window Module Left Handle side, Rear Safety Power Window Module Left Handle side
MODULE 6	10A	IBU, Low DC-DC Converter (Audio/AMP (Amplifier)), Electronic Auto Transmission Shift Lever (SBW (Shift By Wire)), Engine Room Junction Block (Power Outlet Relay)
A/C	10A	Air Conditioner Control Module, Air Conditioner Switch, Engine Room Junction Block (Blower Relay)
MODULE 4	10A	Head Lamp Left Handle side/Right Handle side, AFS Control Unit

Engine compartment fuse panel

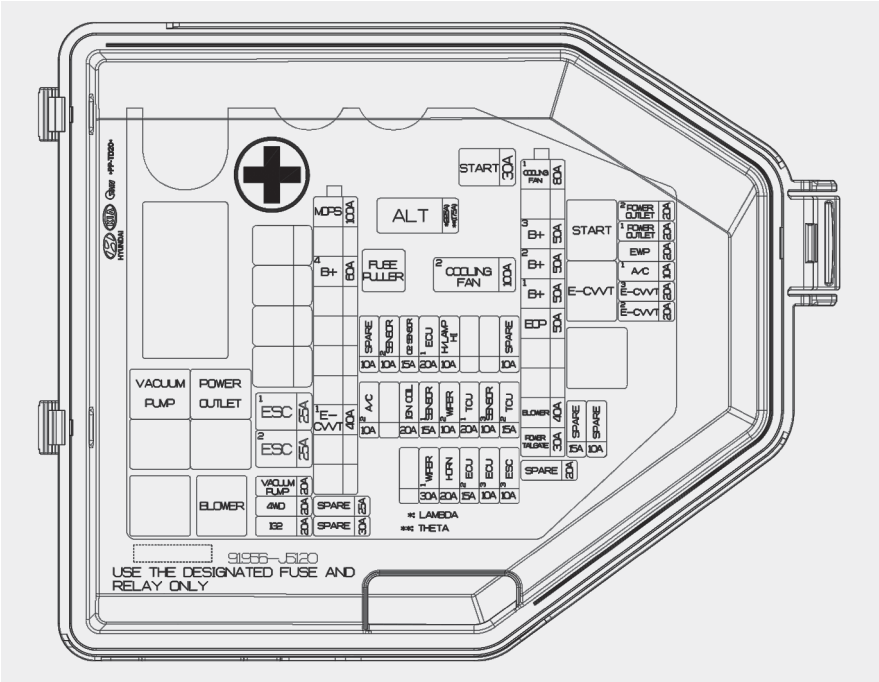

OCK070041N

Engine room compartment fuse panel

Fuse Name	Fuse rating	Circuit Protected
ALT	175A 250A	Alternator, Multi Fuse - C/FAN1/B+4/B+3/B+2/B+1/ EOP/BLOWER/POWER TAIL GATE
START	30A	Start Relay
C/FAN 2	100A	[BLDC (Brushless Direct Current) Motor & (Gasoline) 3.3 T-GDi]] Cooling Fan Controller
C/FAN 1	80A	[BLDC (Brushless Direct Current) Motor Smartstream G2.5 FR T-GDi] Cooling Fan Controller
B+3	50A	Instrument Panel Junction Block (Fuse - STOP LAMP/ Leak Current Autocut Device (Fuse - INTERIOR LAMP, DDM, IBU3, MEMORY, MULTI MEDIA1, MULTI MEDIA2, MULTI MEDIA3))

Fuse Name	Fuse rating	Circuit Protected
B+2	50A	Instrument Panel Junction Block (Fuse - DOOR LOCK / POWER HANDLE/SUNROOF/DRIVER POWER SEAT/ PASSENGER POWER SEAT)
B+1	50A	Instrument Panel Junction Block (Fuse - SEAT HEATER/TAIL GATE/MODULE 9/PASSENGER POWER WINDOW/DRIVER POWER WINDOW)
EOP	50A	Electric Oil Pump
ESC 1	25A	ESC (Electronic Stability Control) Control Module
ESC 2	25A	ESC (Electronic Stability Control) Control Module
BLOWER	40A	Blower Relay
POWER TAIL-GATE	30A	Power Tail Gate Module
MDPS	100A	MDPS (Motor Driven Power Steering) Unit
B+4	60A	Engine Control Relay, Fuse - HORN / WIPER1 / H/ BEAM H/LAMP / B/ALARM)
E-CVVT 1	40A	[Smartstream G2.5 FR T-GDi] E-CVVT Relay
VACUUM PUMP	20A	[(Gasoline) 2.0 FR T-GDi, (Gasoline) 3.3 T-GDi] Vacuum Pump Relay
AWD	20A	AWD (All Wheel Drive) ECM (Electronic Control Mod-ule)
IG 2	20A	IG2 Relay
POWER OUTLET 2	20A	Rear Power Outlet
POWER OUTLET 1	20A	Front Power Outlet #1
A/C 1	10A	Air Conditioner Control Module
E-CVVT 3	20A	[Smartstream G2.5 FR T-GDi] ECM (Engine Control Module)
E-CVVT 2	20A	[Smartstream G2.5 FR T-GDi] ECM (Engine Control Module)
ESC 3	10A	ESC (Electronic Stability Control) Control Module
ECU 3	10A	ECM (Engine Control Module)
ECU 2	15A	ECM (Engine Control Module)
HORN	20A	Horn Relay
WIPER 1	30A	Wiper Power Relay

Fuse Name	Fuse rating	Circuit Protected
TCU 2	15A	TCM (Transmission Control Module), Electronic Oil Pump
O2S ENSOR	15A	[Smartstream G2.5 FR T-GDi] Oxygen Sensor (UP/DOWN) [(Gasoline) 3.3 T-GDi] Oxygen Sensor #1/#2/#3/#4
TCU 1	20A	TCM (Transmission Control Module)
WIPER 2	10A	ECM (Engine Control Module), IBU, Wiper Motor, Front Wiper (Low) Relay
SENSOR 1	15A	Fuel pump relay [Smartstream G2.5 FR T-GDi] Injector #1/#2/#3/#4
IGN COIL	20A	[Smartstream G2.5 FR T-GDi] Ignition Coil #1/#2/#3/#4 [(Gasoline) 3.3 T-GDi] Ignition Coil #1/#2/#3/#4/#5/#6
H/BEAM H/LAMP	10A	Head Lamp (High) Relay
ECU 1	20A	ECM (Engine Control Module)
SENSOR 2	10A	Recirculation Valve Control Solenoid Valve, Purge Control Solenoid Valve, Canister Close Valve[Smartstream G2.5 FR T-GDi] Variable Oil Pump, Oil Control Valve, Air Conditioner Relay [(Gasoline) 3.3 T-GDi] Electronic Thermostat, Oil Pressure Solenoid Valve, Oil Control Valve #1/#2/#3/#4 (Intake/Exhaust), Variable Exhaust Flap Actuator LH/RH
EWP	20A	Electric Water Pump
A/C 2	10A	Air Conditioner Relay

Relay

Relay Name	Type
Vacuum Pump Relay	ISO HC MICRO
Power Outlet Relay	ISO HC MICRO
Blower Relay	ISO HC MICRO
Start Relay	ISO HC MICRO
E-CVVT Relay	ISO MICRO

Rear fuse box panel

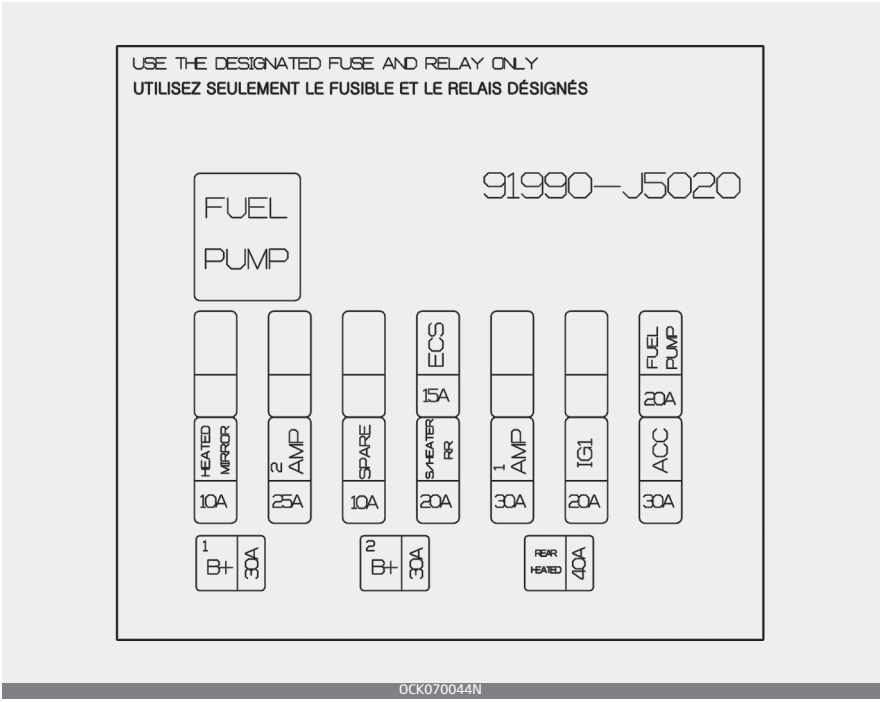

OCK070044N

Rear fuse box panel

Fuse Name	Fuse rating	Circuit Protected
ECS	15A	ECS (Electronic Control Suspension) Unit
REAR S/HEAT	20A	Rear Seat Warmer Control Module
HEAT MIRROR	10A	Air Conditioner Switch, Driver/Passenger Power Outside Mirror
FUEL PUMP	20A	Fuel Pump Relay
REAR HEATED	40A	Rear Heated Relay
AMP 2	25A	AMP (Amplifier) (MOBIS/PREMIUM)
AMP 1	30A	Low DC-DC Converter (AMP (Amplifier))
IG 1	15A	IG1 Relay
ACC	30A	Instrument Panel Junction Block ((Fuse - POWER OUTLET/ CHARGER/ MODULE6)
B+1	30A	Instrument Panel Junction Block (Fuse - IBU1/IBU2/ IPS2/IPS5/IPS6/IPS8/IPS9/IPS10))
B+2	30A	Instrument Panel Junction Block (Fuse - E-SHIFTER/ MODULE1/IPS1/IPS4/IPS7)

Battery box fuse panel

OCK070046

Battery box fuse panel

Fuse Name	Fuse rating	Circuit Protected
B+1	100A	Rear Sub Junction Block (Fuse - FUEL PUMP / REAR HEATED/ AMP1)
B+2	80A	Rear Sub Junction Block (DCU Relay, Fuse - ECS1 / REAR S/HEAT / IG1)
START	40A	Engine Room Junction Block (Power Outlet Relay), Fuse -START / ECU2 / TCU1)
AMS	10A	Battery Sensor

Light bulbs

Bulb replacement precaution

Please keep extra bulbs on hand with appropriate wattage ratings in case of emergencies.

Refer to "Bulb wattage" on page 8-3.

When changing lamps, first turn off the engine at a safe place, firmly apply the parking brake and detach the battery's negative (-) terminal.

⚠ WARNING

Working on the lights

Prior to working on the light, firmly apply the parking brake, ensure that the ignition switch is turned to the LOCK position and turn off the lights to avoid sudden movement of the vehicle burns to your skin or fingers, or an electric shock.

Use only bulbs of the specified wattage.

⚠ CAUTION

Light replacement

Be sure to replace the burned out bulb with one of the same wattage rating. Otherwise, it may cause damage to the fuse or electric wiring system.

⚠ CAUTION

Headlamp Lens

To prevent damage, do not clean the headlamp lens with chemical solvents or strong detergents.

- **Lamp part malfunction due to net-work failure**

The headlamp, taillight, and fog light may light up when the head lamp switch is turned ON, and not light up when the taillight or for light switch is turned ON. This may be cause by network failure or vehicle electrical control system malfunction. If there is a problem, we recommend the system be serviced by an authorized Kia dealer.

- **Lamp part malfunction due to electrical control system stabilization**

A normally functioning lamp may flicker momentarily. This momentary occurrence is due to the stabilization function of the vehicle's electrical control system. If the lamp stops flickering after a few moments, the vehicle does not require service.

However, if the lamp goes out after the momentary flickering, or the flickering continues, we recommend the system be serviced by an authorized Kia dealer.

✻ NOTICE

- If the light bulb or lamp connector is removed while the lamp is still on, the fuse box's electronic system may log it as a malfunction. Therefore, a lamp malfunction incident may be recorded as a Diagnostic Trouble Code (DTC) in the fuse box.
- It is normal for an operating lamp to flicker momentarily. This is due to a stabilization function of the vehicle's electronic control device. If the lamp lights up normally after momentarily blinking, then it is functioning as normal. However, if the lamp continues to flicker several times or turns off completely, there may be an error in the vehicle's electronic control device. Please have the vehicle checked by an authorized Kia dealer immediately.

✻ NOTICE

You can find moisture inside the lens of lamps after a car wash or driving in the rain. It is a natural event caused by the temperature difference between the inside and the outside of the lamp and does not mean a problem with its functions. The moisture inside the lamp would disappear if you drive the vehicle with the headlamp turned on, however, the level at which the moisture is removed may differ depending on the size/location/condition of the lamp. If the moisture continues to stay inside the lamp, we recommend that you have the vehicle checked by an authorized Kia dealer.

If you don't have the necessary tools, the correct bulbs and the expertise, consult an authorized Kia dealer. In many cases, it is difficult to replace vehicle light bulbs because other parts of the vehicle must be removed before you can get to the bulb. This is especially true if you have to remove the headlamp assembly to get to the bulb(s).

Removing/installing the headlamp assembly can result in damage to the vehicle.

If non-genuine parts or substandard bulbs are used, it may lead to blowing a fuse or other wiring damages.

Do not install extra lamps or LEDs to the vehicle. If additional lights are installed, it may lead to lamp malfunctions and flickering. Additionally, the fuse box and other wiring may be damaged.

Light bulb position (Front)

Head lamp - Type A

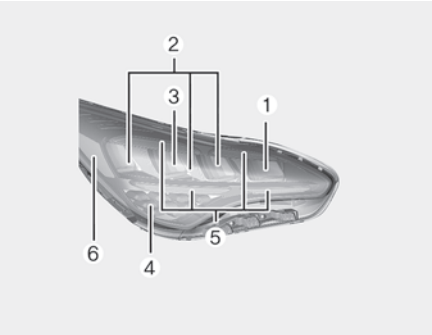

OCK070123N

Head lamp - Type B

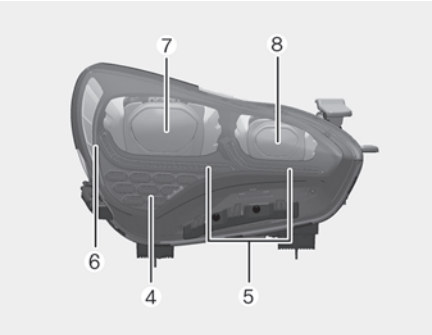

OCK070048N

1. Headlamp (High) (LED type)
2. Headlamp (Low) (LED type)
3. Headlamp (High assist) (LED type)
4. Front turn signal lamp (LED type)
5. Day time running lamp /Position lamp (LED type)
6. Side marker (LED type)
7. Headlamp (Low/High) (LED type)
8. Headlamp (Low/High assist) (LED type)

Light bulb position (Rear)

Rear combination lamp - Type A

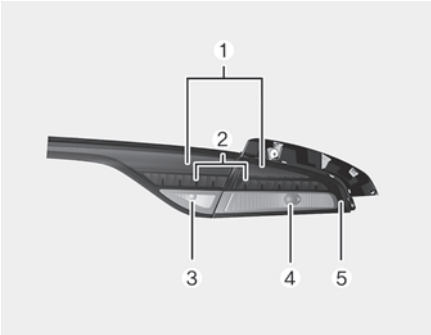

OCK070122N

Rear combination lamp - Type B

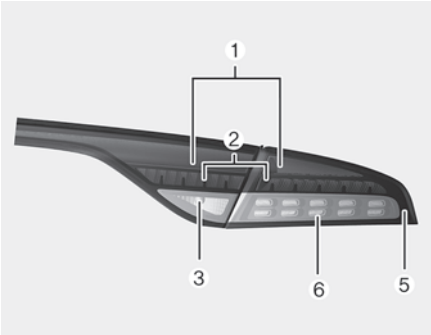

OCK070121N

High mounted stop lamp

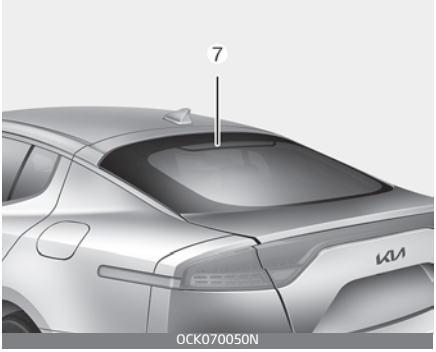

OCK070050N

License plate lamp

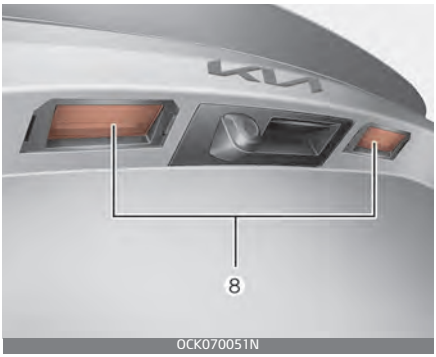

1. Stop and tail lamp (LED type)
2. Stop lamp (LED type)
3. Back-up lamp (bulb type)
4. Rear turn signal lamp (bulb type)
5. Side marker (LED type)
6. Rear turn signal lamp (LED type)
7. High mounted stop lamp (LED type)
8. License plate lamp (LED type)

Light bulb position (Side)

Side repeater lamp

1. Side repeater lamp (LED type)

Headlamp (LED type) replacement

Head lamp - Type A

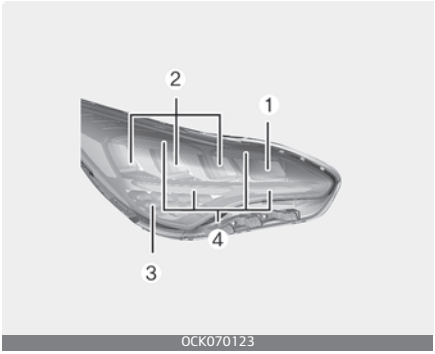

If the High beam lamp (1), Low beam lamp (2), High beam assist lamp (3), Front turn signal lamp (4), Day time running lamp/Position lamp (5) or Side maker (6) does not operate, have the vehicle checked by an authorized Kia dealer.

The LED lamps cannot be replaced as a single unit because it is an integrated unit. The LED lamps has to be replaced with the unit.

A skilled technician should check or repair the head lamp (LED), for it may damage related parts of the vehicle.

Head lamp – Type B

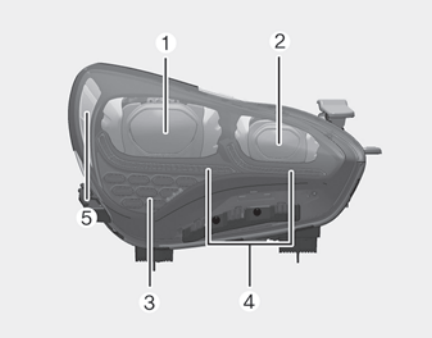

OCK077100L

If the Low/High beam lamp(1), Low/High beam assist lamp (2), Front turn signal lamp (3), Day time running lamp/Position lamp (4) or Side marker (5) does not operate, have the vehicle checked by an authorized Kia dealer.

The LED lamps cannot be replaced as a single unit because it is an integrated unit. The LED lamps has to be replaced with the unit.

A skilled technician should check or repair the head lamp (LED), for it may damage related parts of the vehicle.

Stop and tail lamp (LED type) bulb replacement

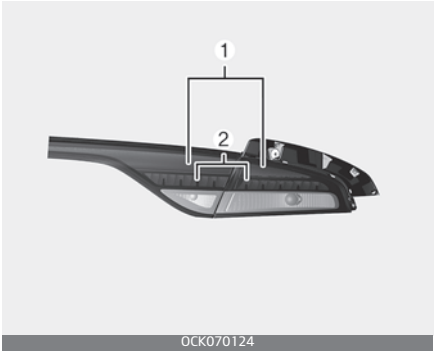

OCK070124

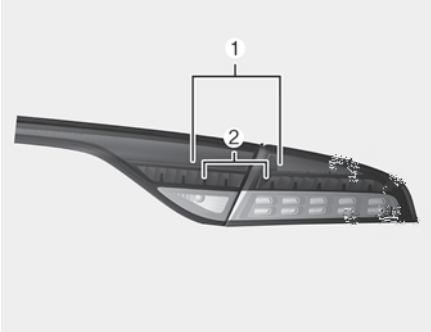

OCK070125

If the stop and tail lamp (LED) (1,2), does not operate, have the vehicle checked by an authorized Kia dealer.

The LED lamps cannot be replaced as a single unit because it is an integrated unit. The LED lamps has to be replaced with the unit.

A skilled technician should check or repair the stop and tail lamp (LED), for it may damage related parts of the vehicle.

Back up lamp (bulb type) bulb replacement

1. Open the tailgate.
2. Remove the service cover of both side (drive side and passenger side).

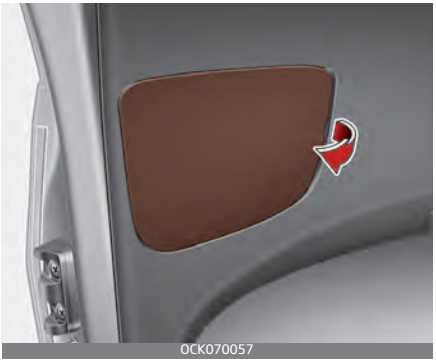
OCK070057

3. Remove the nuts from rear combination lamp of both side (drive side and passenger side).
4. Disconnect the connector from rear combination lamp of both side (drive side and passenger side).
5. Remove the rear combination lamp assembly from the body of the vehicle.

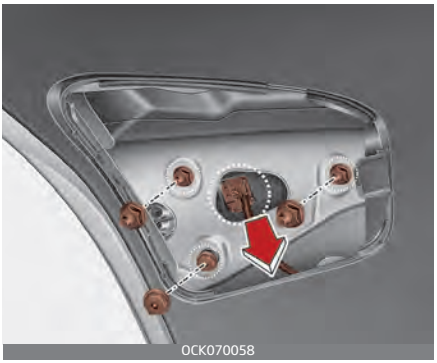
OCK070058

OCK070127

6. Remove the socket from the assembly by turning the socket counterclockwise until the tabs on the socket align with the slots on the assembly.
7. Remove the bulb from the socket by pressing it in and rotating it counterclockwise until the tabs on the bulb align with the slots in the socket. Pull the bulb out of the socket.

OCK070060

8. Insert a new bulb by inserting it into the socket and rotating it until it locks into place.
9. Install the socket in the assembly by aligning the tabs on the socket

with the slots in the assembly. Push the socket into the assembly and turn the socket clockwise.

10. Install the rear combination lamp assembly to the body of the vehicle.
11. Install the service cover by putting it into the service hole.

Rear turn signal lamp (bulb type) bulb replacement

1. Open the tailgate.
2. Open the service cover.

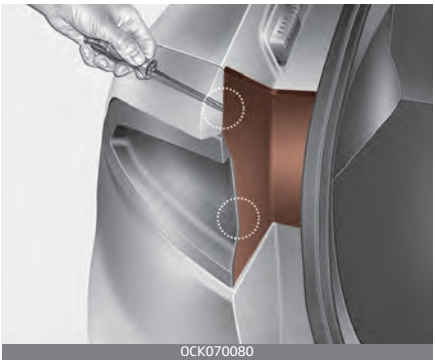
OCK070080

3. Loosen the lower light assembly retaining screw with a cross-tip screwdriver or spanner.

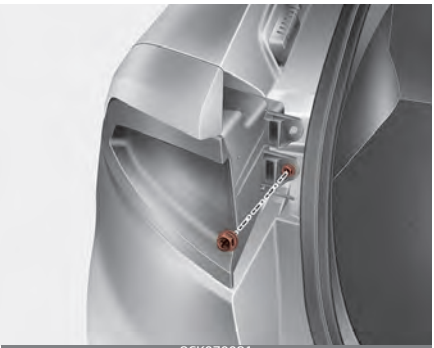
OCK070081

4. Remove the garnish (1) on the top of the rear combination lamp and loosen the 1 screw (2) on the top.

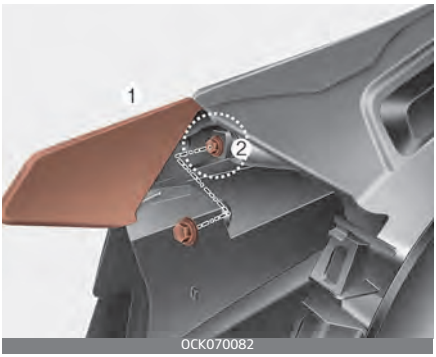

OCK070082

5. Remove the rear combination lamp assembly from the body of the vehicle.

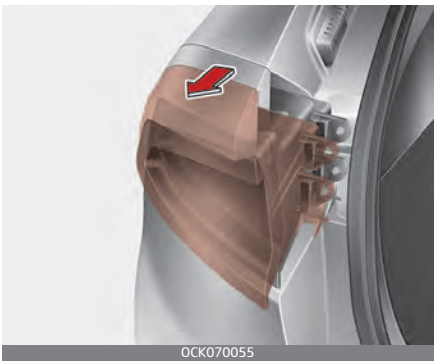
OCK070055

6. Disconnect the rear combination lamp connector.
7. Remove the socket from the assembly by turning the socket counterclockwise until the tabs on the socket align with the slots on the assembly.

OCK070056

8. Remove the bulb from the socket by pressing it in and rotating it counterclockwise until the tabs on the bulb align with the slots in the socket. Pull the bulb out of the socket.
9. Insert a new bulb by inserting it into the socket and rotating it until it locks into place.
10. Install the socket in the assembly by aligning the tabs on the socket with the slots in the assembly. Push the socket into the assembly and turn the socket clockwise.
11. Install the rear combination lamp assembly to the body of the vehicle.
12. Install the service cover.

Rear side marker (LED type) bulb replacement

OCK070126N

If the rear side marker (LED) (1) does not operate, have the vehicle checked by an authorized Kia dealer.

The LED lamps cannot be replaced as a single component because they are part of an integrated unit. The LED lamps have to be replaced with the unit.

A skilled technician should check or repair the rear side marker (LED), for it may damage related parts of the vehicle.

Rear turn signal lamp (LED type) bulb replacement

OCK070126

If the rear turn signal lamp (LED) (1), does not operate, have the vehicle checked by an authorized Kia dealer.

The LED lamps cannot be replaced as a single unit because it is an integrated unit. The LED lamps has to be replaced with the unit.

A skilled technician should check or repair the rear turn signal lamp (LED), for it may damage related parts of the vehicle.

High mounted stop lamp (LED type) bulb replacement

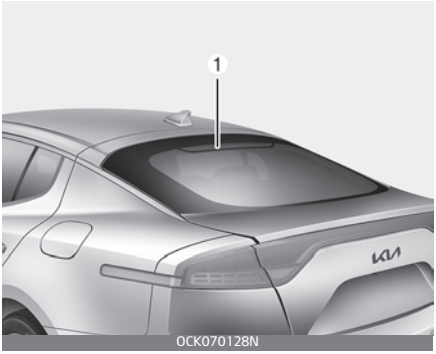

OCK070128N

If the high mounted stop lamp (LED) (1) does not operate, have the vehicle checked by an authorized Kia dealer.

The LED lamps cannot be replaced as a single component because they are part of an integrated unit. The LED lamps have to be replaced with the unit.

A skilled technician should check or repair the high mounted stop lamp (LED), for it may damage related parts of the vehicle.

License plate lamp (LED type) bulb replacement

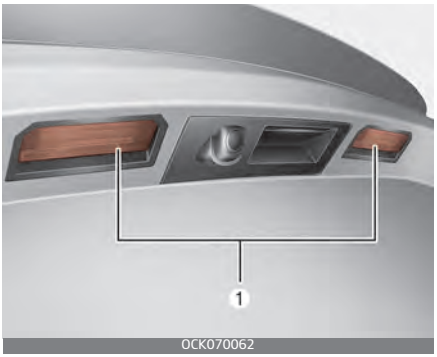

If the license plate lamp (LED) (1) does not operate, have the vehicle checked by an authorized Kia dealer.

The LED lamps cannot be replaced as a single component because they are part of an integrated unit. The LED lamps have to be replaced with the unit.

A skilled technician should check or repair the license plate lamp (LED), for it may damage related parts of the vehicle.

Side repeater lamp (LED type) bulb replacement

If the side repeater lamp (LED) (1) does not operate, have the vehicle checked by an authorized Kia dealer.

The LED lamps cannot be replaced as a single component because they are part of an integrated unit. The LED lamps have to be replaced with the unit.

A skilled technician should check or repair the side repeater lamp (LED), for it may damage related parts of the vehicle.

Map lamp (LED type) bulb replacement

If the map lamp (LED) (1) does not operate, have the vehicle checked by an authorized Kia dealer.

The LED lamps cannot be replaced as a single component because they are part of an integrated unit. The LED lamps have to be replaced with the unit.

A skilled technician should check or repair the map lamp (LED), for it may damage related parts of the vehicle.

Vanity mirror lamp (LED type) bulb replacement

If the vanity mirror lamp (LED) (1) does not operate, have the vehicle checked by an authorized Kia dealer.

The LED lamps cannot be replaced as a single component because they are part of an integrated unit. The LED lamps have to be replaced with the unit.

A skilled technician should check or repair the vanity mirror lamp (LED), for it may damage related parts of the vehicle.

Room lamp (LED type) bulb replacement

If the room lamp (LED) (1) does not operate, have the vehicle checked by an authorized Kia dealer.

The LED lamps cannot be replaced as a single component because they are part of an integrated unit. The LED lamps have to be replaced with the unit.

A skilled technician should check or repair the room lamp (LED), for it may damage related parts of the vehicle.

Glove box lamp (LED type) bulb replacement

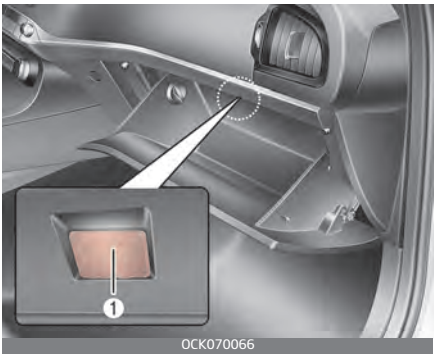

If the glove box lamp (LED) (1) does not operate, have the vehicle checked by an authorized Kia dealer.

The LED lamps cannot be replaced as a single component because they are part of an integrated unit. The LED lamps have to be replaced with the unit.

A skilled technician should check or repair the glove box lamp (LED), for it may damage related parts of the vehicle.

Luggage room lamp (LED type) bulb replacement

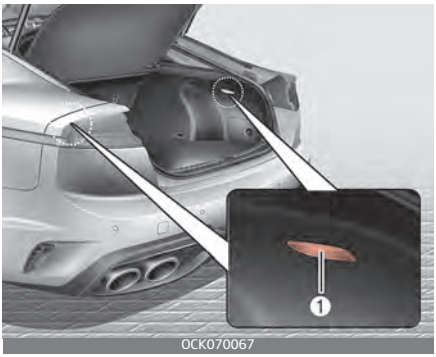

If the luggage room lamp (LED) (1) does not operate, have the vehicle checked by an authorized Kia dealer.

The LED lamps cannot be replaced as a single component because they are part of an integrated unit. The LED lamps have to be replaced with the unit.

A skilled technician should check or repair the luggage room lamp (LED), for it may damage related parts of the vehicle.

Appearance care

Exterior care

Exterior general caution

It is very important to follow the label directions when using any chemical cleaner or polish. Read all warning and caution statements that appear on the label.

✻ NOTICE

If you park the vehicle around a stainless signboard or windshield building etc., the plastic exterior trim (bumper, spoiler, garnish, lamp, outside mirror etc.) may be damaged by reflected sunlight from the external structure. To avoid damaging the plastic exterior trim, park the vehicle away from the areas where the reflected light may occur or use a vehicle cover (Depending on the vehicle, the type of exterior trim applied such as spoiler may differ).

Finish maintenance

Washing

To help protect your vehicle's finish from rust and deterioration, wash it thoroughly and frequently at least once a month with lukewarm or cold water.

If you use your vehicle for off-road driving, you should wash it after each off-road trip. Pay special attention to the removal of any accumulation of salt, dirt, mud, and other foreign materials. Make sure the drain holes in the lower edges of the doors and rocker panels are kept clear and clean.

Insects, tar, tree sap, bird droppings, industrial pollution and similar deposits can damage your vehicle's finish if not removed immediately.

Even prompt washing with plain water may not completely remove all these deposits. A mild soap, safe for use on painted surfaces, may be used.

After washing, rinse the vehicle thoroughly with lukewarm or cold water. Do not allow soap to dry on the finish.

After washing the vehicle, test the brakes while driving slowly to see if they have been affected by water. If braking performance is impaired, dry the brakes by applying them lightly while maintaining a slow forward speed.

High-pressure washing

- When using high-pressure washers, make sure to maintain sufficient distance from the vehicle. Insufficient clearance or excessive pressure can lead to component damage or water penetration.
- Do not spray the camera, sensors or its surrounding area directly with a high pressure washer. Shock applied from high pressure water may cause the device to not operate normally.
- Do not bring the nozzle tip close to boots (rubber or plastic covers) or connectors as they may be damaged if they come into contact with high pressure water.

⚠ CAUTION

Wet engine

- Water washing in the engine compartment including high pressure water washing may cause the failure of electrical circuits located in the engine compartment.
- Never allow water or other liquids to come in contact with electrical/electronic components inside the vehicle as this may damage them.

Waxing

Wax the vehicle when water will no longer bead on the paint.

Always wash and dry the vehicle before waxing. Use a good quality liquid or paste wax, and follow the manufacturer's instructions. Wax all metal trim to protect it and to maintain its luster.

Removing oil, tar, and similar materials with a spot remover will usually strip the wax from the finish. Be sure to re-wax these areas even if the rest of the vehicle does not yet need waxing.

Do not apply wax on embossed unpainted unit, as it may tarnish the unit.

⚠ CAUTION

Drying vehicle

- Wiping dust or dirt off the body with a dry cloth will scratch the finish.
- Do not use steel wool, abrasive cleaners, acid detergents or strong detergents containing high alkaline or caustic agents on chrome-plated or anodized aluminum parts. This may result in damage to the protective coating and cause discoloration or paint deterioration.

Finish damage repair

Deep scratches or stone chips in the painted surface must be repaired promptly. Exposed metal will quickly rust and may develop into a major repair expense.

If your vehicle is damaged and requires any metal repair or replacement, be sure the body shop applies anti-corrosion materials to the parts repaired or replaced.

Bright-metal maintenance

- To remove road tar and insects, use a tar remover, not a scraper or other sharp object.
- To protect the surfaces of bright metal parts from corrosion, apply a coating of wax or chrome preservative and rub to a high luster.
- During winter weather or in coastal areas, cover the bright metal parts with a heavier coating of wax or preservative. If necessary, coat the parts with non-corrosive petroleum jelly or other protective compound.

Underbody maintenance

Road salt and other corrosive chemicals are used in cold weather states to melt snow and prevent ice accumulation. If these chemicals are not regularly removed, they will corrode the vehicle underbody and over time damage fuel lines, the fuel tank

retention system, the vehicle suspension, the exhaust system, and even the body frame. The National Highway Traffic Safety Administration has warned all vehicle owners of all brands of the need to take the following steps:

- Wash the undercarriage of your vehicle regularly during the winter and whenever your vehicle has been exposed to such salts or chemicals.
- Do a thorough washing of the undercarriage at the end of the winter.
- Use professional service technicians or governmental inspection stations to annually inspect for corrosion.
- Immediately seek an inspection of your vehicle if you become visually aware of corrosion flaking or scaling or if you become aware of a change in vehicle performance, such as soft or spongy brakes, fluids leaking, impairment of directional control, suspension noises or rattling metal straps.

Aluminum wheel maintenance

The aluminum wheels are coated with a clear protective finish.

- Do not use any abrasive cleaner, polishing compound, solvent, or wire brushes on aluminum wheels. They may scratch the finish.
- Clean the wheel when it has cooled.
- Use only a mild soap or neutral detergent, and rinse thoroughly with water. Also, be sure to clean the wheels after driving on salted roads. This helps prevent corrosion.
- Avoid washing the wheels with highspeed vehicle wash brushes.
- Do not use any alkaline or acid detergents It may damage and corrode the aluminum wheels coated with a clear protective finish.

Corrosion protection

Protecting your vehicle from corrosion

By using the most advanced design and construction practices to combat corrosion, we produce vehicles of the highest quality. However, this is only part of the job. To achieve the long-term corrosion resistance your vehicle can deliver, the owner's cooperation and assistance is also required.

Common causes of corrosion

The most common causes of corrosion on your vehicle are:

- Road salt, dirt and moisture that is allowed to accumulate underneath the vehicle.

- Removal of paint or protective coatings by stones, gravel, abrasion or minor scrapes and dents which leave unprotected metal exposed to corrosion.

High-corrosion areas

If you live in an area where your vehicle is regularly exposed to corrosive materials, corrosion protection is particularly important. Some of the common causes of accelerated corrosion are road salts, dust control chemicals, ocean air and industrial pollution.

Moisture breeds corrosion

Moisture creates the conditions in which corrosion is most likely to occur. For example, corrosion is accelerated by high humidity, particularly when temperatures are just above freezing. In such conditions, the corrosive material is kept in contact with the vehicle's surface by moisture that evaporates slowly.

Mud is particularly corrosive because it dries slowly and holds moisture in contact with the vehicle. Although the mud appears to be dry, it can still retain the moisture and promote corrosion.

High temperatures can also accelerate corrosion of parts that are not properly ventilated so the moisture can be dispersed. For all these reasons, it is particularly important to keep your vehicle clean and free of mud or accumulations of other materials. This applies not only to the visible surfaces but particularly to the underside of the vehicle.

To help prevent corrosion

You can help prevent corrosion from beginning by observing the following:

Keep your vehicle clean

The best way to prevent corrosion is to keep your vehicle clean and free of corrosive materials. Attention to the underside of the vehicle is particularly important.

- If you live in a high-corrosion area — where road salts are used, near the ocean, areas with industrial pollution, acid rain, etc.—, you should take extra care to prevent corrosion. In winter, hose off the underside of your vehicle at least once a month and be sure to clean the underside thoroughly when winter is over.
- When cleaning underneath the vehicle, give particular attention to the components under the fenders and other areas that are hidden from view. Do a thorough job; just dampening the accumulated mud rather than washing it away will accelerate corrosion rather than prevent it. Water under high pressure and steam

are particularly effective in removing accumulated mud and corrosive materials.

- When cleaning lower door panels, rocker panels and frame members, be sure that drain holes are kept open so that moisture can escape and not be trapped inside to accelerate corrosion.

Keep your garage dry

Don't park your vehicle in a damp, poorly ventilated garage. This creates a favorable environment for corrosion. This is particularly true if you wash your vehicle in the garage or drive it into the garage when it is still wet or covered with snow, ice or mud. Even a heated garage can contribute to corrosion unless it is well ventilated so moisture is dispersed.

Keep paint and trim in good condition

Scratches or chips in the finish should be covered with "touch-up" paint as soon as possible to reduce the possibility of corrosion. If bare metal is showing through, the attention of a qualified body and paint shop is recommended.
Bird droppings : Bird droppings are highly corrosive and may damage painted surfaces in just a few hours. Always remove bird droppings as soon as possible.

Don't neglect the interior

Moisture can collect under the floor mats and carpeting and cause corrosion. Check under the mats periodically to be sure the carpeting is dry. Use particular care if you carry fertilizers, cleaning materials or chemicals in the vehicle.
These should be carried only in proper containers and any spills or leaks should be cleaned up, flushed with clean water and thoroughly dried.

Interior care

Interior general precautions

Prevent chemicals such as perfume, cosmetic oil, sun cream, hand cleaner, and air freshener from contacting the interior parts because they may cause damage or discoloration. If they do contact the interior parts, wipe them off immediately. If necessary, use a vinyl cleaner, see product instructions for correct usage.

⚠ CAUTION

Electrical components

Never allow water or other liquids to come in contact with electrical/electronic components inside the vehicle as this may damage them.

⚠ CAUTION

Leather

When cleaning leather products (steering wheel, seats etc.), use

neutral detergents or low alcohol content solutions. If you use high alcohol content solutions or acid/alkaline detergents, the color of the leather may fade or the surface may get stripped off.

Taking care of leather seats

- Vacuum the seat periodically to remove dust and sand on the seat. It will prevent abrasion or damage of the leather and maintain its quality.
- Wipe the natural leather seat cover often with dry or soft cloth.
- Sufficient use of a leather protective may prevent abrasion of the cover and helps maintain the color.
  Be sure to read the instructions and consult a specialist when using leather coating or protective agents.
- Leather with bright colors (beige, cream beige) is easily contaminated and clear in appearance. Clean the seats frequently.
- Avoid wiping with wet cloth. It may cause the surface to crack.

Cleaning the leather seats

- Remove all contaminations instantly. Refer to instructions below for removal of each contaminant.
- Cosmetic products (sunscreen, foundation, etc.)
  - Apply cleansing cream on a cloth and wipe the contaminated point. Wipe off the cream with a wet cloth and remove water with a dry cloth.
- Beverages (coffee, soft drink, etc.)
  - Apply a small amount of neutral detergent and wipe until contaminations do not smear.
- Oil
  - Remove oil instantly with absorbable cloth and wipe with stain remover for natural leather only.
- Chewing gum
  - Harden the gum with ice and remove gradually.

Fabric seat cover using precautions (if equipped)

Please clean the fabric seats regularly with a vacuum cleaner in consideration of fabric material characteristics. If they are heavily soiled with beverage stains, etc., use a suitable interior cleaner.To prevent damage to seat covers, wipe off the seat covers down to the seams with a large wiping motion and moderate pressure using a soft sponge or microfiber cloth.

Velcro closures on clothing or sharp objects may cause snagging or scratches on the surface of the seats. Make sure not to rub such objects against the surface.

Cleaning the upholstery and interior trim

Vinyl

Remove dust and loose dirt from vinyl with a whisk broom or vacuum cleaner. Clean vinyl surfaces with a vinyl cleaner.

Fabric

Remove dust and loose dirt from fabric with a whisk broom or vacuum cleaner. Clean with a mild soap solution recommended for upholstery or carpets. Remove fresh spots immediately with a fabric spot cleaner. If fresh spots do not receive immediate attention, the fabric can be stained and its color can be affected. Also, its fire-resistant properties can be reduced if the material is not properly maintained.

Using anything but recommended cleaners and procedures may affect the fabric's appearance and fire resistant properties.

Cleaning the lap/shoulder belt webbing

Clean the belt webbing with any mild soap solution recommended for cleaning upholstery or carpet. Follow the instructions provided with the soap. Do not bleach or re-dye the webbing because this may weaken it.

Cleaning the interior window glass

If the interior glass surfaces of the vehicle become fogged (that is, covered with an oily, greasy or waxy film), they should be cleaned with a glass cleaner. Follow the directions on the glass cleaner container.

⚠ CAUTION

Rear window

Do not scrape or scratch the inside of the rear window. This may result in damage of the rear window defroster grid.

Emission control system

The emission control system of your vehicle is covered by a written limited warranty. Please see the warranty information contained in the Warranty & Consumer Information manual in your vehicle.

Your vehicle is equipped with an emission control system to meet all applicable emission regulations.

There are three emission control systems, as follows.

1. Crankcase emission control system
2. Evaporative emission control system
3. Exhaust emission control system

In order to assure the proper function of the emission control systems, it is recommended that you have your vehicle inspected and maintained by an authorized Kia dealer in accordance with the maintenance schedule in this manual.

Caution for the Inspection and Maintenance Test (With Electronic Stability Control (ESC) system)

- **To prevent the vehicle from misfiring during dynamometer testing, turn the Electronic Stability Control (ESC) system off by pressing the ESC switch.**
- **After dynamometer testing is completed, turn the ESC system back on by pressing the ESC switch again.**

1. Crankcase emission control system

The positive crankcase ventilation system is employed to prevent air pollution caused by blow-by gases being emitted from the crankcase. This system supplies fresh filtered air to the crankcase through the air intake hose. Inside the crankcase, the fresh air mixes with blow-by gases, which then pass through the PCV valve into the induction system.

2. Evaporative emission control (including ORVR: Onboard Refueling Vapor Recovery) system

The Evaporative Emission Control System is designed to prevent fuel vapors from escaping into the atmosphere.

(The ORVR system is designed to allow the vapors from the fuel tank to be loaded into a canister while refueling at the gas station, preventing the escape of fuel vapors into the atmosphere.)

Canister

Fuel vapors generated inside the fuel tank are absorbed and stored in the onboard canister. When the engine is running, the fuel vapors absorbed in the canister are drawn

into the surge tank through the purge control solenoid valve.

Purge Control Solenoid Valve (PCSV)

The purge control solenoid valve is controlled by the Engine Control Module (ECM); when the engine coolant temperature is low during idling, the PCSV closes so that evaporated fuel is not taken into the engine. After the engine warms up during ordinary driving, the PCSV opens to introduce evaporated fuel to the engine.

3. Exhaust emission control system

The Exhaust Emission Control System is a highly effective system which controls exhaust emissions while maintaining good vehicle performance.

Engine exhaust gas precautions (carbon monoxide)

- Carbon monoxide can be present with other exhaust fumes. Therefore, if you smell exhaust fumes of any kind inside your vehicle, have it inspected and repaired immediately. If you ever suspect exhaust fumes are coming into your vehicle, drive it only with all the windows fully open. Have your vehicle checked and repaired immediately.

⚠ WARNING

Exhaust

Engine exhaust gases contain carbon monoxide (CO). Though colorless and odorless, it is dangerous and could be lethal if inhaled. Follow the instructions on this page to avoid CO poisoning.

- Do not operate the engine in confined or closed areas (such as garages) any more than what is necessary to move the vehicle in or out of the area.
- When the vehicle is stopped in an open area for more than a short time with the engine running, adjust the ventilation system (as needed) to draw outside air into the vehicle.
- Never sit in a parked or stopped vehicle for any extended time with the engine running.
- When the engine stalls or fails to start, excessive attempts to restart the engine may cause damage to the emission control system.

Operating precautions for catalytic converters (if equipped)

⚠ WARNING

Catalytic converter

Keep away from the catalytic converter and exhaust system while the vehicle is running or immediately thereafter. The exhaust and catalytic systems are very hot and may burn you.

⚠ WARNING

Fire

- Do not park, idle or drive the vehicle over or near flammable objects, such as grass, vegetation, paper, leaves, etc. A hot exhaust system can ignite flammable items under your vehicle.
- Also, do not remove the heat sink around the exhaust system, do not seal the bottom of the vehicle or do not coat the vehicle for corrosion control. It may present a fire risk under certain conditions.

Your vehicle is equipped with a catalytic converter emission control device.

Therefore, the following precautions must be observed:

- Use only UNLEADED FUEL for gasoline engines.
- Do not operate the vehicle when there are signs of engine malfunction, such as misfire or a noticeable loss of performance.
- Do not misuse or abuse the engine. Examples of misuse are coasting with the ignition off and descending steep grades in gear with the ignition off.
- Do not operate the engine at high idle speed for extended periods (5 minutes or more).
- Do not modify or tamper with any part of the engine or emission control system. All inspections and adjustments must be made by an authorized Kia dealer.
- Avoid driving with an extremely low fuel level. Running out of fuel could cause the engine to misfire, damaging the catalytic converter.

Failure to observe these precautions could result in damage to the catalytic converter and to your vehicle. Additionally, such actions could void your warranties.

California perchlorate notice

Perchlorate Material–special handling may apply, See www.dtsc.ca.gov/hazardouswaste/perchlorate.

Notice to California Vehicle Dismantlers:

Perchlorate containing materials, such as air bag inflators, seatbelt pretensioners and keyless remote entry batteries, must be disposed of according to Title 22 California Code of Regulations Chapter 67384.10 (a).

Specifications, Consumer information and Reporting safety defects

8

Dimensions **8-2**
Engine **8-2**
Bulb wattage **8-3**
Tires and wheels **8-4**
Gross vehicle weight **8-6**
Luggage volume **8-6**
Air conditioning system **8-6**
Recommended lubricants and capacities **8-7**
Vehicle Identification Number (VIN) **8-10**
Vehicle certification label **8-11**
Tire specification and pressure label **8-11**
Engine number **8-12**
Refrigerant label **8-12**
Consumer assistance (U.S. only) **8-13**
- Toll free consumer assistance 8-13
- Emergency roadside assistance 8-13
- Trip interruption 8-14
- Registering your vehicle in a foreign country 8-14

Electrical equipment (U.S. only) **8-15**
- Installation of a mobile two-way radio system 8-15

Reporting safety defects (U.S. only) **8-16**
Online factory authorized manuals (U.S. only) **8-17**
- Service manual 8-17
- Electrical troubleshooting manual 8-17
- Owner's manual 8-17

Specifications, Consumer information and Reporting safety defects

Dimensions

Item			Length (mm)
Overall length			4,830
Overall width			1,870
Overall height			1,400
Tread	Front	225/45R18	1,596
		225/40R19	1,596
		225/40ZR19	1,596
	Rear	225/45R18	1,647
		255/35R19	1,619
		255/35ZR19	1,619
Wheelbase			2,905

Engine

Item	Gasoline Engine	
	Smartstream G2.5 FR T-GDi	(Gasoline) 3.3 T-GDi
Displacement [cu.in (cc)]	152. 3 (2,497)	203.94 (3,342)
Bore x Stroke [in. (mm)]	3.5 x 4 (88.5 x 101.5)	3.62 x 3.30 (92 x 83.8)
Firing order	1-3-4-2	1-2-3-4-5-6
No. of cylinders	4. In-line	6, V-type

Bulb wattage

Light Bulb			Wattage (W)	Bulb type
Front	Headlamps (High)	Type A	LED	LED
	Headlamps (Low)		LED	LED
	Headlamp (High assist)		LED	LED
	Headlamps (Low/ High)	Type B	LED	LED
	Headlamps (Low/ High assist)		LED	LED
	Front turn signal lamps		LED	LED
	Day time running lamp /Position lamp		LED	LED
	Side Marker lamps		LED	LED
	Side Repeater lamps		LED	LED
Rear	Rear Stop/Tail lamps (Inside/Outside)		LED	LED
	Rear Stop lamps (Inside/Outside)		LED	LED
	Back-up lamps		16W	W16W
	Side Marker lamps		LED	LED
	Rear turn signal lamps (Outside)	Type A	21W	PY21W
		Type B	LED	LED
	High mounted stop lamp		LED	LED
	License plate lamps		LED	LED
Interior	Map lamps		LED	LED
	Vanity mirror lamp		LED	LED
	Room lamps		LED	LED
	Glove box lamp		LED	LED
	Luggage room lamp		LED	LED

Tires and wheels

Item	Tire size	Wheel size	Load Capacity		Speed capacity		Inflation pressure [bar (psi, kPa)]				Wheel lug nut torque kgf·m (lbf·ft, N·m)
							Normal load*1		Maximum load or Over 100 mph (160 km/h)		
			LI*2	lbs (kg)	SS*3	mph (km/h)	Front	Rear	Front	Rear	
Full size tire	225/45R18	8.0J X 18	95	1,521 (690)	V	149 (240)	2.5 (36, 250)	2.7 (39, 270)	2.6 (38, 260)	2.7 (39, 270)	11~13 (79 ~ 94, 107 ~ 127)
	225/40R19	8.0J X 19	93	1,433 (650)	W	167 (270)	2.5 (36, 250)	-	2.6 (38, 260)	-	
							2.6 *4 (38, 260)	-	2.6 (38, 260)	-	
	255/35R19	8.5J X 19	96	1,565 (710)	W	167 (270)	-	2.5 (36, 250)	-	2.7 (39, 270)	
	225/40ZR19	8.0J X 19	93	1,433 (650)	Y	186 (300)	2.5 (36, 250)	-	2.6 (38, 260)	-	
							2.6*4 (38, 260)	-	2.6 (38, 260)	-	
	255/35ZR19	8.5J X 19	96	1,565 (710)	Y	186 (300)	-	2.5 (36, 250)	-	2.7 (39, 270)	
Compact spare tire (if equipped)	T135/80R18	4.0T X 18	104	1,984 (900)	M	80 (130)	4.2 (60, 420)	4.2 (60, 420)	4.2 (60, 420)	4.2 (60, 420)	

*1. Normal load : Up to 3 persons
*2. Load Index
*3. Speed Symbol
*4. It is applied to (Gasoline) 3.3 T-GDi AWD vehicle.

⚠ CAUTION

When replacing tires, use the same size originally supplied with the vehicle.

Using tires of a different size can damage the related parts or make them work irregularly.

✻ NOTICE

- It is permissible to add 3 psi (21 kPa) to the standard tire pressure specification if colder temperatures are expected soon.
  Tires typically loose 1 psi (7 kPa) for every 12°F (-11°C) temperature drop. If extreme temperature variations are expected, recheck your tire pressure as nec-

essary to keep them properly inflated.

- We recommend that when replacing tires, use the same originally supplied with the vehicles. If not, that affects driving performance.
- When driving in high altitude grades, it is natural for the atmospheric pressure to decrease. Therefore, please check the tire pressure and add more air when necessary.
  Additionally required tire air pressure per km above sea level: 1.5 psi (10.5 kPa)/km
- Speeds above 100 mph (160 km/h)
  In order to drive at maximum speeds in excess of 100 mph (160 km/h), please observe, and, if necessary, adjust tire pressures for speeds exceeding 100 mph (160 km/h) from the above table. Otherwise tire damage and accidents could occur.

Gross vehicle weight

ITEM		lbs (kg)
Smartstream G2.5 FR T-GDi	2WD	4,850 (2,200)
	AWD	5,027 (2,280)
(Gasoline) 3.3 T-GDi	2WD	5,027 (2,280)
	AWD	5,137 (2,330)

Luggage volume

ITEM	Volume
SAE	23.31 cu ft (660 L)

Air conditioning system

ITEM		Weight of volume	Classification
Refrigerant	R-1234yf oz. (g)	20.1 ± 0.9 (570 ± 25g)	R-1234yf
Compressor lubricant oz. (g)		3.5 ± 0.4 (100 ± 10g)	FD46XG (IDEMITSU)

We recommend that you contact an authorized Kia dealer for more details.

Recommended lubricants and capacities

To help achieve proper engine and powertrain performance and durability, use only lubricants of the proper quality.

The correct lubricants also help promote engine efficiency that results in improved fuel economy.

These lubricants and fluids are recommended for use in your vehicle.

Lubricant			Volume	Classification
Engine oil *1 *2 (drain and refill) Recommends TOTAL QUARTZ	Smartstream G2.5 FR T-GDi		2WD: 6.76 US qt. (6.4 L) 4WD: 6.34 US qt. (6.0 L)	Full synthetic SAE 0W-30, API SN PLUS/SP or ILSAC GF-6*3
	(Gasoline) 3.3 T-GDi		7.29 US qt. (6.9 L)	Full synthetic SAE 5W-30 ACEA A5/B5*3
Automatic transmission fluid	Smartstream G2.5 FR T-GDi		9.72 US qt. (9.2 L)	GS ATF SP-IV-RR KIA genuine ATF SP-IV-RR
	(Gasoline) 3.3 T-GDi			
Coolant	Smart-stream G2.5 FR T-GDi	Engine coolant	10.03 US qt. (9.5 L)	Mixture of antifreeze and distilled water (Ethylene glycol base coolant for aluminum radiator)
		Water cooled type Inter cooler	2.85 US qt. (2.7 L)	
	Gasoline) 3.3 T-GDi		12.25 US qt. (11.6 L)	
Brake fluid*4			0.42 US qt. (0.395 L)	SAE J1704 DOT-4LV, ISO4925 CLASS-6, FMVSS116 DOT-4
Rear differential oil (without LSD)*5	Smartstream G2.5 FR T-GDi		1.27 US qt. (1.2 L)	HYPOID GEAR OIL API GL-5 SAE 75W/85 (SK HK SYN GEAR OIL 75W85)
	(Gasoline) 3.3 T-GDi		1.37 US qt. (1.3 L)	
Rear differential oil (with LSD)*5 *6	Smartstream G2.5 FR T-GDi		1.37 US qt. (1.3 L)	HYPOID GEAR OIL API GL-5 SAE 75W/85 (SK HK JL SYN LSD GEAR OIL 75W85 FM PLUS or equivalent)
	(Gasoline) 3.3 T-GDi		1.48 US qt. (1.4 L)	

Lubricant		Volume	Classification
Front differential oil (AWD)*5		0.74 US qt. (0.7 L)	HYPOID GEAR OIL API GL-5 SAE 75W/85 (SK HK SYN GEAR OIL 75W85)
Transfer oil (AWD)	Gear/ Clutch	0.60 US qt. (0.57 L)	SHELL TF 0870B
	Actuator	0.26 US qt. (0.25 L)	
Fuel		15 US gal. (60 L)	Refer to "Fuel requirements" on page 1-2.

*1. Refer to the recommended SAE viscosity numbers on the next page.
*2. Engine oils labeled Energy Conserving Oil are now available. Along with other additional benefits, they contribute to fuel economy by reducing the amount of fuel necessary to overcome engine friction. Often, these improvements are difficult to measure in everyday driving, but in a year's time, they can offer significant cost and energy savings.
*3. Requires <API SN PLUS/SP(ILSAC Latest) Full synthetic> grade engine oil for 2.5 FR T-GDi and <API Latest (ILSAC Latest) or ACEA A5/B5 Full synthetic> grade engine oil for 3.3 T-GDi.
*4. To maintain your vehicle's best brake and ABS/ESC performance, use Kia genuine brake fluid as in the specification.
*5. Regardless of oil change intervals, replace oil immediately if Rear-Differential or Front-Differential is submerged.
*6. Be sure to inject oil for exclusive use of LSD when replacing Rear Differential (for LSD) Oil.

Recommended SAE viscosity number

Engine oil viscosity (thickness) has an effect on fuel economy and cold weather operating (engine start and engine oil flowability). Lower viscosity engine oils can provide better fuel economy and cold weather performance; however, higher viscosity engine oils are required for satisfactory lubrication in hot weather. Using oils of any viscosity other than those recommended could result in engine damage. When choosing an oil, consider the range of temperature your vehicle will be operated in before the next oil change. Proceed to select the recommended oil viscosity from the chart.

Temperature Range for SAE Viscosity Numbers										
Temperature	°C	-30	-20	-10	0	10	20	30	40	50
	(°F)	-10	0	20	40	60	80	100	120	
Gasoline Engine Oil	Smartstream G2.5 FR T-GDi	0W-30								
	(Gasoline) 3.3 T-GDi*1		10W-30							
		5W-30, 5W-40								

*1 : For better fuel economy, it is recommended to use the engine Oil of a viscosity grade SAE 5W-30 (ACEA A5/B5 or API Latest (or ILSAC Latest)). However, if the engine oil is not available in your country, select the proper engine oil using the engine oil viscosity chart.

An engine oil displaying this API Certification Mark conforms to the international Lubricant Specification Advisory Committee (ILSAC). It is recommended to only use engine oils that uphold this API Certification Mark.

Vehicle Identification Number (VIN)

Frame number

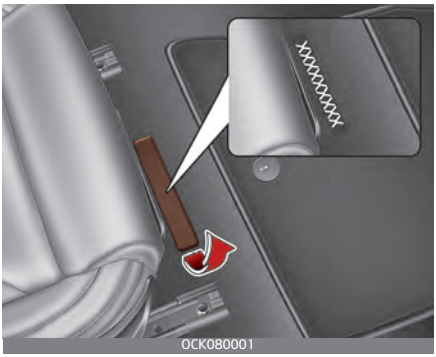

The vehicle identification number (VIN) is the number used in registering your vehicle and in all legal matters pertaining to its ownership, etc.

The number is punched under driver or front passenger seat.

To check the number, open the cover.

VIN label

The VIN is also on a plate attached to the top of the dashboard. The number on the plate can easily be seen through the windshield from outside.

Vehicle certification label

The vehicle certification label attached on the driver’s side center pillar gives the vehicle identification number (VIN).

Tire specification and pressure label

The tires supplied on your new vehicle are chosen to provide the best performance for normal driving.

The tire label located on the driver's side center pillar gives the tire pressures recommended for your vehicle.

Engine number

Smartstream G2.5 FR T-GDi

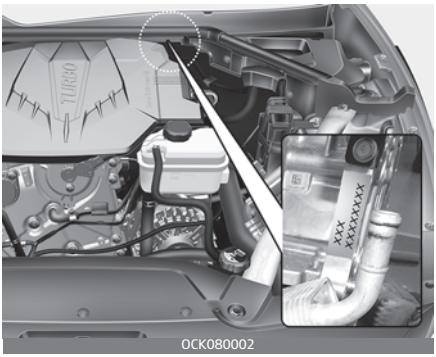

OCK080002

(Gasoline) 3.3 T-GDi

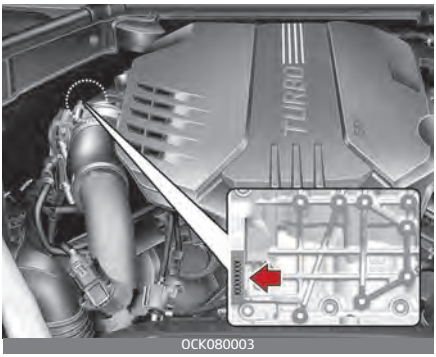

OCK080003

The engine number is stamped on the engine block as shown in the drawing.

Refrigerant label

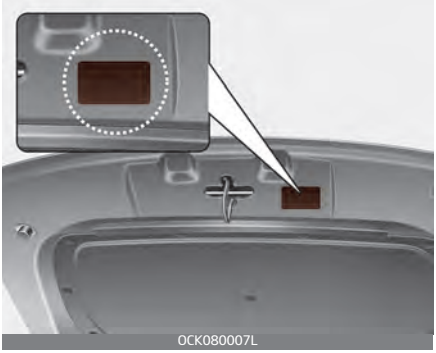
OCK080007L

The refrigerant label is located on the underside of the hood.

* For more details, refer to "Air Conditioning refrigerant label" on page 4-146.

Consumer assistance (U.S. only)

Roadside Assistance is provided on all new current model year Kia Vehicles from the date the vehicle is delivered to the first retail buyer or otherwise put into use (inservice date), whichever is earlier, for a period of 60 months or 60,000 miles, whichever is earlier, subject to the terms, conditions and exclusions set forth in the Kia Warranty and Consumer Information Manual applicable to your model year vehicle.

KMA reserves the right to limit or deny services or other benefits to any owner or driver when, in KMA's judgment, the claims and/or service requests are excessive in frequency or type of occurrence.

Toll free consumer assistance

Kia's toll-free Consumer Assistance hot line is staffed from 5:00 AM to 6:00 PM PST, Monday through Friday and is accessible by dialing 1-800-333-4Kia (4542).

For more information regarding assistance available, please refer to your Kia Warranty & Consumer Information Manual.

Emergency roadside assistance

Kia's toll free Roadside Assistance hot line is staffed 24 hours a day, 365 days a year and is accessible by dialing 1-800-333-4Kia (4542).

Please note that you must provide your Vehicle Identification Number (VIN) to verify coverage at the time of your call. The VIN can be found on the dash of your vehicle on the driver's side, on the door jamb of the driver's door, your vehicle's registration or proof of insurance card.

Kia utilizes a network of over 30,000 roadside assistance providers. Should you accidentally run out of fuel, require a battery jump, or need help changing a tire, a Kia Roadside Assistance Representative will dispatch someone to deliver a small quantity of gas, change a flat tire with your inflated spare, or arrange a battery jump to allow you to proceed to your destination. We have access to a network of over 10,000 locksmiths to help you should you become locked out of your Kia.

In the event that mechanical difficulty renders your vehicle undriveable due to a warranty-related concern, Kia's Roadside Assistance Representative will arrange to transport your vehicle to the nearest Kia dealer or to an authorized Kia alternative service location.

Your vehicle must be accessible to our dispatch transport vehicle, as determined by our driver, to receive this service.

✻ NOTICE

Roadside Assistance benefits are not available for any Kia vehicle that has ever been or should be issued a "salvage" title or similar "branded" title under any state's law or has been declared a "total loss" or equivalent by a financial institution or insurance company.

Trip interruption

Trip interruption expense benefits are provided in the event that a warranty-related disablement occurs more than 150 miles from your home, and the repairs require more than 24 hours to complete. Reasonable reimbursement is included for meals, lodging, or rental vehicle expenses. Trip interruption coverage is limited to $100 per day subject to a three day maximum limit per incident. You must contact the Kia Roadside Assistance Center to obtain pre-authorization of expenses. Once the Kia Roadside Assistance Center gives authorization for trip interruption benefits, they will assist you in making the necessary arrangements. Insurance deductibles, expenses, and claims paid by your insurance company or other providers are not eligible for reimbursement.

Fleet vehicles are excluded from reimbursement under Kia's Trip Interruption Policy.

Registering your vehicle in a foreign country

If you plan to register your vehicle in a foreign country, you should confirm that it conforms to the regulations in that country. Even if you successfully register the vehicle in a foreign country, you may experience the following problems and should therefore consider the possibility of having to deal with them:

1. The fuel specified for your vehicle may be unavailable. If other than the specified fuel is used, it could cause damage to the engine, the fuel injection system, and other fuel-related parts which may not be covered under your New Vehicle Emissions Limited Warranty.
2. We must, therefore, clearly state that when you leave the country in which you purchased your Kia new and register it in another country, problems arising from the use of fuel other than the specified fuel are not subject to manufacturer's warranty. Because vehicles like yours may not be marketed in the new country of registration, parts, servicing techniques and tools necessary to maintain and repair your vehicle may be unavailable.

Even if vehicles like yours are sold there, mechanical specifications required by the government may vary enough from the country of purchase to cause additional problems.

3. There may not be an Authorized Kia Dealer in the area in which you plan to register your vehicle. You may additionally experience difficulty in obtaining services in a foreign country for any number of reasons.

Further, we cannot assume any responsibility for problems that result from unsatisfactory service or lack of service outside of the United States.

Electrical equipment (U.S. only)

The electrical system of your vehicle is designed to perform under all reasonably expected operating conditions. However, before any additional electrical equipment is installed in your vehicle, consult an Authorized Kia Dealer, in order to ensure that you do not void your warranty.

Certain electrical equipment, or the way in which it is installed, may adversely affect the operation of your vehicle, including such systems as the engine control system, the audio system and the electrical charging system and thus potentially void all or part of your warranty.

We assume no responsibility for any expense you may incur or for any malfunction of your vehicle or any of its components or systems that may result from the installation of additional electrical equipment that is not supplied, or recommended for installation by, Kia.

Installation of a mobile two-way radio system

If a mobile two-way radio system is installed improperly, or if an excessively powerful type of system is used, other electronic systems may be adversely affected. To avoid damage to your vehicle, consult an

Authorized Kia Dealer concerning the proper equipment and installation.

Kia motor vehicles are designed and manufactured to meet or exceed all applicable safety standards.

For your safety, however, we strongly urge you to read and follow all directions in this Owner's Manual, particularly the information under the headings "NOTICE", "CAUTION" and "WARNING".

If, after reading this manual, you have any questions regarding the operation of your vehicle, safety issues and defects please contact your Kia's toll-free Consumer Assistance hot line as below:

National Consumer Affairs Manager

Kia Motors America, Inc.

P.O. Box 52410

Irvine, CA 92619-2410

1-800-333-4Kia (4542)

Reporting safety defects (U.S. only)

Reporting Safety Defects.

If you believe that your vehicle has a defect which could cause a crash or could cause injury or death, you should immediately inform the National Highway Traffic Safety Administration (NHTSA) in addition to notifying Kia Motors America, Inc.

If NHTSA receives similar complaints, it may open an investigation, and if it finds that a safety defect exists in a group of vehicles, it may order a recall and remedy campaign. However, NHTSA cannot become involved in individual problems between you, your dealer, or Kia Motors America, Inc.

To contact NHTSA, you may call the Vehicle Safety Hotline toll-free at 1-888-327-4236 (TTY: 1-800-424-9153); go to http://www.safercar.gov; download the SaferCar mobile application; or write to: Administrator, NHTSA, 1200 New Jersey Ave. SE., Washington, DC 20590.You can also obtain other information about motor vehicle safety from http://www.safercar.gov.

Online factory authorized manuals (U.S. only)

The following publications are available on www.KiaTechinfo.com

Service manual

This manual covers maintenance and recommended procedures for repair to engine and chassis components. It is written for the Journeyman mechanic, but is simple enough for most mechanically inclined owners to understand.

Electrical troubleshooting manual

This manual complements the Service Manual by providing indepth troubleshooting information for each electrical circuit in your vehicle.

Owner's manual

This manual describes the overall features and operating procedures for the vehicle.

Abbreviation A

ABBREVIATION

ABS
Anti-lock Brake System

BCA
Blind-Spot Collision-Avoidance Assist

BCW
Blind-Spot Collision Warning

BVM
Blind-Spot View Monitor

CC
Cruise Control

CRS
Child Restraint System

DAW
Driver Attention Warning

DRL
Daytime Running Light

EBD
Electronic Brake force Distribution

ECM
Electric Chromic Mirror

EPS
Electronic Power Steering

ESC
Electronic Stability Control

ESS
Emergency Stop Signal

FCA
Forward Collision-Avoidance Assist

HAC
Hill-start Assist Control

HBA
High Beam Assist

HMSL
High Mounted Stop Lamp

HUD
Head-Up Display

LATCH
Lower Anchors and Tether for Children

LFA
Lane Following Assist

LKA
Lane Keeping Assist

MDPS
Motor Driven Power Steering

MIL
Malfunction Indicator Lamp

MSLA
Manual Speed Limit Assist

ODS
Occupant Detection System

PCA-R
Reverse Parking Collision-Avoidance Assist

PDW
Reverse Parking Distance Warning

RCCA
Rear Cross-Traffic Collision-Avoidance Assist

RCCW

Rear Cross-Traffic Collision Warning

RVM

Rear View Monitor

SCC

Smart Cruise Control

SRS

Supplemental Restraint System

SRSCM

SRS Control Module

SVM

Surround View Monitor

TBT

Turn By Turn

TCS

Traction Control System

TIN

Tire Identification Number

TPMS

Tire Pressure Monitoring System

VIN

Vehicle Identification Number

VSM

Vehicle Stability Management

Index I

Index

A

air bag - advanced supplemental restraint system 3-43
adding equipment to or modifying your air bag-equipped vehicle 3-68
air bag collision sensorsconditions of the air bag) 3-63
air bag inflation conditions 3-64
air bag warning label 3-68
air bag warning light 3-46
curtain air bag 3-61
driver's and passenger's front air bag 3-56
how does the air bag system operate? 3-44
occupant detection system (ODS) 3-49
side air bag 3-59
SRS Care 3-67
why didn't my air bag deploy in a collision? (Inflation and non-inflation conditions of the air bag) 3-62
air cleaner 7-34
filter replacement 7-34
air conditioning system 8-6
all wheel drive (AWD) 5-36
emergency precautions 5-38
using all wheel drive (AWD) 5-36
appearance care 7-85
exterior care 7-85
interior care 7-90
automatic climate control system 4-148
automatic heating and air conditioning 4-149
automatic transmission 5-15
automatic transmission operation 5-15
launch control 5-20
automatic transmission (shift-by-wire) 5-22
automatic transmission operation 5-22
launch Control 5-32
LCD display messages 5-28

B

battery 7-39
battery replacement 7-39
for best battery service 7-40
recharging the battery 7-41
reset items 7-42
blind-spot collision-avoidance assist (BCA) 5-89
function malfunction and limitations 5-97
function operation 5-94
function settings 5-92
limitations of the function 5-98
blind-spot view monitor (BVM) 5-109
function malfunction and limitations 5-111
function operation 5-110
function settings 5-110
brake fluid 7-32
checking the brake fluid level 7-32
brake system 5-41
anti-lock brake system (ABS) 5-51
auto hold 5-48
brake assist system (BAS) 5-60
electronic control suspension (ECS) 5-60
electronic parking brake 5-43
electronic stability control (ESC) 5-53
hill-start assist control (HAC) 5-58
low vacuum assist (LVA) 5-61
power brakes 5-41
vehicle stability management (VSM) 5-57
bulb wattage 8-3

C

california perchlorate notice 7-96
child restraint system (CRS) 3-33
children always in the rear 3-33
installing a child restraint system (CRS) 3-36
selecting a child restraint system (CRS) 3-34
cimate control system 4-143
air conditioning refrigerant label 4-146
climate control air filter 4-145
system operation 4-143
climate control air filter 7-36
filter inspection 7-36
consumer assistance (U.S. only) 8-13
curtain air bag 3-61

D

declaration of conformity 4-176, 5-158
defroster 4-142
rear window defroster 4-142
dimensions 8-2
door locks 4-17
child-protector rear door locks 4-20
door lock/unlock features 4-20
from inside the vehicle 4-18
from outside the vehicle 4-17
rear occupant alert (ROA) system 4-21
with central door lock switch 4-19
drive mode integrated control system 5-62
driver attention warning (DAW) 5-102
function malfunction and limitations 5-107
function operation 5-104
function settings 5-103
limitations of the function 5-107
driver's seat belt warning 3-24

E

economical operation 5-160
electrical equipment (U.S. only) 8-15
emergency starting 6-6
jump starting 6-6
emission control system 7-93
engine 8-2
engine compartment 7-4
engine coolant 7-29
changing the coolant 7-31
checking the coolant level 7-29
engine number 8-12
engine oil 7-26
changing the engine oil and filter 7-27
checking the engine oil level 7-26
ENGINE START/STOP button 5-8

F

forward collision-avoidance assist (FCA) (sensor fusion) 5-65
function malfunction and limitations 5-74
function operation 5-69
function settings 5-67
limitations of the function 5-75
forward/reverse parking distance warning (PDW) 4-122
detecting sensor 4-122
function malfunction and limitations 4-125
function operation 4-123
function settings 4-123
front passenger's seat belt warning 3-24
fuel filler door 4-43
closing 4-44
emergency fuel filler door release 4-

44
opening 4-43
fuel requirements 1-2
fuses 7-57
battery box fuse panel 7-72
engine compartment fuse replacement 7-61
engine room compartment fuse panel 7-67
fuse switch 7-60
fuse/relay panel description 7-62
inner panel fuse replacement 7-59
instrument panel (driver's side fuse panel) 7-64
rear fuse box panel 7-71

G

gross vehicle weight 8-6

H

head up display (HUD) 4-105
description 4-105
head up display information 4-106
head up display ON/OFF 4-106
head up display setting 4-107
heated steering wheel 4-53
high beam assist (HBA) 4-130
highway driving assist (HDA) 5-140
fnction settings 5-141
function malfunction and limitations 5-144
function operation 5-142
limitations of the function 5-146
hood 4-42
closing 4-42
opening 4-42

I

if the engine overheats 6-8
if the engine will not start 6-5
if you have a flat tire (with spare tire) 6-15
jack and tools 6-15
jack label 6-23
removing and storing the spare tire 6-16
if you have a flat tire (with tire mobility kit) 6-25
components of the tire mobility kit (TMK) 6-28
using the tire mobility kit 6-29
important safety precautions 3-3
in case of an emergency while driving 6-4
infotainment system 4-175
antenna 4-175
USB port 4-175
instrument cluster 4-68
gauges 4-70
instrument cluster control 4-69
LCD display control 4-69
interior features 4-164
air ventilation seat 4-166
coat hook 4-173
cup holder 4-164
floor mat anchor (s) 4-173
luggage net (holder) 4-174
power outlet 4-168
seat warmer 4-165
sun visor 4-167
USB charger 4-169
wireless smart phone charging system 4-169
interior light 4-138
automatic turn off function 4-138
door courtesy lamp (front seat) 4-140
glove box lamp 4-140
liftgate room lamp 4-140
map lamp 4-139
room lamp 4-140
vanity mirror lamp 4-141
ISG (idle stop and go) system 5-11

auto start 5-13
auto stop 5-12
condition of ISG system operation 5-13
ISG system deactivation 5-14
ISG system malfunction 5-14

L

lane following assist (LFA) 5-136
function malfunction and limitations 5-139
function operation 5-137
function settings 5-136
lane keeping assist (LKA) 5-82
function malfunction and limitations 5-87
function operation 5-85
function settings 5-83
limitations of the function 5-87
LCD display 4-75
driving assist mode 4-77
information 4-78
LCD display modes 4-75
master warning mode 4-78
sport mode 4-76
trip computer mode 4-76
trip information (trip computer) 4-87
trip modes 4-88
turn by turn mode 4-76
user settings mode 4-79
warning messages 4-90
liftgate 4-26
emergency liftgate safety release 4-32
non-powered liftgate 4-26
power liftgate 4-27
light bulbs 7-73
back up lamp (bulb type) bulb replacement 7-78
glove box lamp (LED type) bulb replacement 7-84
headlamp (LED type) replacement 7-76
high mounted stop lamp (LED type) bulb replacement 7-81
license plate lamp (LED type) bulb replacement 7-82
luggage room lamp (LED type) bulb replacement 7-85
map lamp (LED type) bulb replacement 7-83
rear side marker (LED type) bulb replacement 7-80
rear turn signal lamp (bulb type) bulb replacement 7-79
rear turn signal lamp (LED type) bulb replacement 7-81
room lamp (LED type) bulb replacement 7-84
side repeater lamp (LED type) bulb replacement 7-82
stop and tail lamp (LED type) bulb replacement 7-77
vanity mirror lamp (LED type) bulb replacement 7-83
lighting 4-127
battery saver function 4-127
daytime running light 4-128
dynamic bending light (DBL) 4-135
headlight (headlamp) escort function 4-127
headlight leveling device 4-135
high beam assist (HBA) 4-130
high beam operation 4-130
lighting control 4-128
turn signals and lane change signals 4-134
limited slip differential (LSD) 5-40
luggage volume 8-6

M

maintenance schedule - turbo models (for (Gasoline) 3.3 T-GDi) 7-16
maintenance schedule - turbo models (for Smartstream G2.5 FR

T-GDi) 7-11
mirror - inside rearview 4-54
electrochromic mirror (ECM) 4-55
electrochromic mirror (ECM) with homelink® system 4-55
mirror - outside rearview 4-65
adjusting outside rearview mirror 4-65
folding the outside rearview mirror 4-67
reverse parking aid function 4-66

N

navigation-based smart cruise control (NSCC) 5-129
function operation 5-130
function settings 5-129
limitations of the function 5-132

O

online factory authorized manuals (U.S. only) 8-17
owner maintenance schedule 7-7

P

power liftgate 4-27
closing the liftgate 4-29
how to reset the power liftgate 4-31
opening the liftgate 4-29
power window lock button 4-40

R

rear cross-traffic collision-avoidance assist (RCCA) 5-147
function malfunction and limitations 5-153
function operation 5-149
function settings 5-148
limitations of the function 5-155
rear cross-traffic safety 5-148
rear occupant alert (ROA) system 4-21
rear view monitor (RVM) 4-107
detecting sensor 4-108
function malfunction and limitations 4-110
function operation 4-109
function settings 4-108
recommended lubricants and capacities 8-7
recommended SAE viscosity number 8-9
refrigerant label 8-12
remote keyless entry system operations 4-10
battery replacement 4-13
immobilizer system 4-14
liftgate unlock 4-11
lock 4-10
panic alarm 4-11
precautions 4-12
remote start 4-11
unlock 4-10
remote window opening system 4-41
reporting safety defects (U.S. only) 8-16
reverse parking distance warning (PDW) 4-118
detecting sensor 4-119
function malfunction and precautions 4-121
function operation 4-120
function settings 4-120
types of warning sound and indicator 4-121
risk of burns when parking or stopping vehicle 1-6
road warning 6-3
hazard warning flasher 6-3

S

safe exit warning (SEW) 4-22
function operation 4-24
function settings 4-23
seat 3-5
driver position memory system (for power seat) 3-12
front seat adjustment - manual (for passenger's seat) 3-8
front seat adjustment - power 3-9
rear seat adjustment 3-17
seatback pocket 3-17
seat belt warning 3-24
seat belts 3-22
care of seat belts 3-32
driver's seat belt warning 3-24
front passenger's seat belt warning 3-24
lap/shoulder belt 3-25
pre-tensioner seat belt 3-28
seat belt restraint system 3-22
seat belt warning 3-24
seats
headrest (for front seat) 3-14
side air bag 3-59
smart cruise control (SCC) 5-112
function malfunction and limitations 5-123
function operating 5-117
function settings 5-112
limitations of the function 5-123
to adjust the sensitivity of smart cruise control 5-116
to turn off the function 5-115
smart key 4-7
functions 4-7
liftgate unlocking 4-9
locking 4-8
unlocking 4-8
smart liftgate 4-33
how to deactivate the smart liftgate 4-35
how to use the smart liftgate 4-33
special driving conditions 5-162
steering wheel 4-51
electric power steering (EPS) 4-51
heated steering wheel 4-53
horn 4-54
tilt and telescopic steering 4-52
storage compartments 4-162
center console storage 4-163
glove box 4-163
sunroof 4-47
surround view monitor (SVM) 4-112
detecting sensor 4-112
function malfunction and limitations 4-117
function operation 4-114
function settings 4-113

T

the eco-coasting system 5-34
eco-coasting operation conditions 5-35
the eco-coasting system release conditions 5-35
theft-alarm system 4-15
tire pressure monitoring system (TPMS) 6-10
tire specification and pressure label 8-11
tires and wheels 7-43, 8-4
checking tire inflation pressure 7-44
recommended cold tire inflation pressures 7-43
tire care 7-43
tire pressure 7-44
tire replacement 7-47
tire rotation 7-45
tire sidewall labeling 7-48
towing 6-32
emergency towing 6-34
emergency towing precautions 6-35
removable towing hook 6-34

trailer towing 5-171
trip information (trip computer) 4-87
accumulated driving information mode 4-88
auto stop time 4-89
drive Info display 4-89
since refueling 4-88

U

user settings mode 4-79

V

vehicle break-in process 1-5
vehicle certification label 8-11
vehicle data collection and event data recorders 1-6
vehicle identification number (VIN) 8-10
vehicle load limit 5-171
vehicle modifications 1-5
vehicle settings (for infotainment system equipped vehicle) 4-87
vehicle weight 5-176

W

warning and indicator lights 4-95
indicator Lights 4-102
warning lights 4-95
warning messages 4-90
washer fluid 7-33
checking the washer fluid level 7-33
welcome system 4-141
escort welcome 4-142
interior light 4-142
welcome light 4-141
windows 4-37
auto up/down window (driver's and front passenger's side) 4-39
opening and closing 4-38
power window lock button 4-40
remote window opening system 4-41
windshield defrosting and defogging 4-156
activate upon washer fluid use 4-160
auto defogging system 4-158
automatic climate control system 4-156
automatic ventilation 4-159
defogging logic 4-157
operation tips 4-157
recirculation mode plus 4-161
remote start 4-162
smart ventilation 4-161
sunroof inside air recirculation 4-161
winter driving 5-166
wiper blades 7-37
blade inspection 7-37
blade replacement 7-38
wipers and washers 4-136
front windshield washers 4-137
wireless smart phone charging system 4-169

2021 KIA MOTORS AMERICA. INC.

" Printed with soy-based ink on recycled paper. We support a healthy planet and better tomorrow."

Movement that inspires