2019 VERSA NOTE

OWNER'S MANUAL
and MAINTENANCE INFORMATION

For your safety, read carefully and keep in this vehicle.

CALIFORNIA PROPOSITION 65 WARNING

⚠WARNING

Operating, servicing and maintaining a passenger vehicle or off-highway motor vehicle can expose you to chemicals including engine exhaust, carbon monoxide, phthalates, and lead, which are known to the State of California to cause cancer and birth defects or other reproductive harm. To minimize exposure, avoid breathing exhaust, do not idle the engine except as necessary, service your vehicle in a well-ventilated area and wear gloves or wash your hands frequently when servicing your vehicle. For more information go to www.P65Warnings.ca.gov/passenger-vehicle.

FOREWORD

This manual was prepared to help you understand the operation and maintenance of your vehicle so that you may enjoy many miles (kilometers) of driving pleasure. Please read through this manual before operating your vehicle.

A separate Warranty Information Booklet explains details about the warranties covering your vehicle. The "Maintenance and schedules" section of this manual explains details about maintaining and servicing your vehicle. Additionally, a separate Customer Care/Lemon Law Booklet (U.S. only) will explain how to resolve any concerns you may have with your vehicle, and clarify your rights under your state's lemon law.

When you require any service or have any questions, a NISSAN dealer will be glad to assist you with the extensive resources available to them.

In addition to factory-installed options, your vehicle may also be equipped with additional accessories installed prior to delivery. It is recommended that you visit a NISSAN dealer for details concerning the particular accessories with which your vehicle is equipped. It is important that you familiarize yourself with all disclosures, warnings, cautions and instructions concerning proper use of such accessories prior to operating the vehicle and/or accessory. It is recommended that you visit a NISSAN dealer for details concerning the particular accessories with which your vehicle is equipped.

READ FIRST—THEN DRIVE SAFELY

Before driving your vehicle, please read this Owner's Manual carefully. This will ensure familiarity with controls and maintenance requirements assisting you in the safe operation of your vehicle.

⚠ WARNING

IMPORTANT SAFETY INFORMATION REMINDERS!

Follow these important driving rules to help ensure a safe and comfortable trip for you and your passengers!

- **NEVER drive under the influence of alcohol or drugs.**
- **ALWAYS observe posted speed limits and never drive too fast for conditions.**
- **ALWAYS give your full attention to driving and avoid using vehicle features or taking other actions that could distract you.**
- **ALWAYS use your seat belts and appropriate child restraint systems. Preteen children should be seated in the rear seat.**

- **ALWAYS provide information about the proper use of vehicle safety features to all occupants of the vehicle.**
- **ALWAYS review this Owner's Manual for important safety information.**

MODIFICATION OF YOUR VEHICLE

This vehicle should not be modified. Modification could affect its performance, safety, emissions or durability and may even violate governmental regulations. In addition, damage or performance problems resulting from modifications may not be covered under NISSAN warranties.

⚠ WARNING

Installing an aftermarket On-Board Diagnostic (OBD) plug-in device that uses the port during normal driving, for example remote insurance company monitoring, remote vehicle diagnostics, telematics or engine reprogramming, may cause interference or damage to vehicle systems. We do not recommend or endorse the use of any aftermarket OBD plug-in devices, unless specifically approved by NISSAN. The vehicle warranty may not cover damage caused by any aftermarket plug-in device.

This manual includes information for all features and equipment available on this model. Features and equipment in your vehicle may vary depending on model, trim level, options selected, order, date of production, region or availability. Therefore, you may find information about features or equipment that are not included or installed on your vehicle.

All information, specifications and illustrations in this manual are those in effect at the time of printing. NISSAN reserves the right to change specifications, performance, design or component suppliers without notice and without obligation. From time to time, NISSAN may update or revise this manual to provide Owners with the most accurate information currently available. Please carefully read and retain with this manual all revision updates sent to you by NISSAN to ensure you have access to accurate and up-to-date information regarding your vehicle. Current versions of vehicle Owner's Manuals and any updates can also be found in the Owner section of the NISSAN website at **https://owners.nissanusa.com/nowners/navigation/manualsGuide**. If you have questions concerning any information in your Owner's Manual, contact NISSAN Con-

sumer Affairs. For contact information, refer to the NISSAN CUSTOMER CARE PROGRAM page in this Owner's Manual.

IMPORTANT INFORMATION ABOUT THIS MANUAL

You will see various symbols in this manual. They are used in the following ways:

⚠ WARNING

This is used to indicate the presence of a hazard that could cause death or serious personal injury. To avoid or reduce the risk, the procedures must be followed precisely.

⚠ CAUTION

This is used to indicate the presence of a hazard that could cause minor or moderate personal injury or damage to your vehicle. To avoid or reduce the risk, the procedures must be followed carefully.

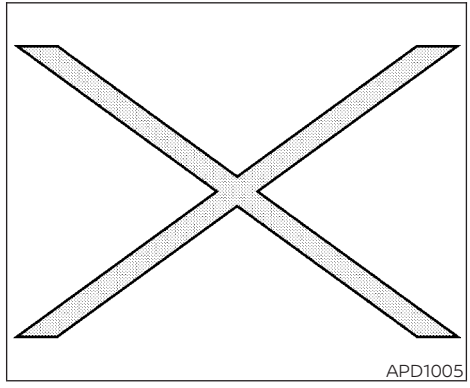

If you see this symbol, it means **"Do not do this"** or **"Do not let this happen."**

If you see a symbol similar to these in an illustration, it means the arrow points to the front of the vehicle.

Arrows in an illustration that are similar to these indicate movement or action.

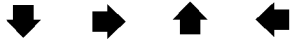

Arrows in an illustration that are similar to these call attention to an item in the illustration.

CALIFORNIA PERCHLORATE ADVISORY

Some vehicle parts, such as lithium batteries, may contain perchlorate material. The following advisory is provided: "Perchlorate Material – special handling may apply. For additional information, refer to www.dtsc.ca.gov/hazardouswaste/perchlorate/".

Bluetooth®

BLUETOOTH® is a trademark owned by Bluetooth SIG, Inc. and licensed to Visteon.

© Nissan Mexicana, S. A. de C. V.

All rights reserved. No part of this Owner's Manual may be reproduced or stored in a retrieval system, or transmitted in any form, or by any means, electronic, mechanical, photocopying, recording or otherwise, without the prior written permission of Nissan Mexicana, S. A. de C. V.

NISSAN CUSTOMER CARE PROGRAM

NISSAN CARES . . .

Both NISSAN and your NISSAN dealer are dedicated to serving all your automotive needs. Your satisfaction with your vehicle and your NISSAN dealer are our primary concerns. Your NISSAN dealer is always available to assist you with all your automobile sales and service needs.

However, if there is something that your NISSAN dealer cannot assist you with or you would like to provide NISSAN directly with comments or questions, please contact the NISSAN Consumer Affairs Department using our toll-free number:

For U.S. customers
1-800-NISSAN-1
(1-800-647-7261)

For Canadian customers
1-800-387-0122

The Consumer Affairs Department will ask for the following information:

- Your name, address, and telephone number
- Vehicle identification number (attached to the top of the instrument panel on the driver's side)
- Date of purchase
- Current odometer reading
- Your NISSAN dealer's name
- Your comments or questions

OR

You can write to NISSAN with the information at:

For U.S. customers
Nissan North America, Inc.
Consumer Affairs Department
P.O. Box 685003
Franklin, TN 37068-5003
or via e-mail at:
nnaconsumeraffairs@nissan-usa.com

For Canadian customers
Nissan Canada Inc.
5290 Orbitor Drive
Mississauga, Ontario L4W 4Z5
or via e-mail at:
information.centre@nissancanada.com

If you prefer, visit us at:
www.nissanusa.com (for U.S. customers)
or
www.nissan.ca (for Canadian customers)

We appreciate your interest in NISSAN and thank you for buying a quality NISSAN vehicle.

Table of Contents

Illustrated table of contents	0
Safety—Seats, seat belts and supplemental restraint system	1
Instruments and controls	2
Pre-driving checks and adjustments	3
Monitor, climate, audio, phone and voice recognition systems	4
Starting and driving	5
In case of emergency	6
Appearance and care	7
Do-it-yourself	8
Maintenance and schedules	9
Technical and consumer information	10
Index	11

0 Illustrated table of contents

Air bags, seat belts and child restraints 0-2
Exterior front 0-3
Exterior rear 0-4
Passenger compartment. 0-5
Instrument panel. 0-6
Engine compartment check locations 0-8
Warning and indicator lights. 0-9

AIR BAGS, SEAT BELTS AND CHILD RESTRAINTS

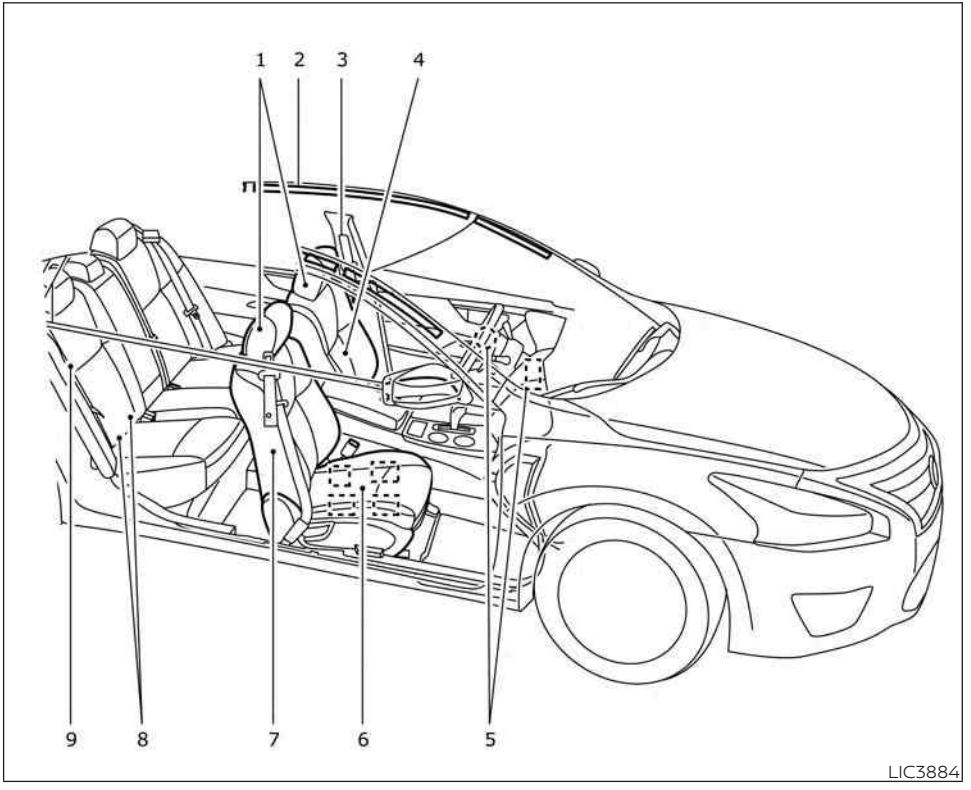

1. Head restraints/headrests (P. 1-6)
2. Roof-mounted curtain side-impact and rollover supplemental air bag (P. 1-44)
3. Front seat belt with pretensioner(s) and shoulder height adjuster (P. 1-10, 1-44)
4. Seats (P. 1-2)
5. Supplemental air bags (P. 1-44)
6. Occupant classification sensor (weight sensor) (P. 1-44)
7. Front seat-mounted side-impact supplemental air bag (P. 1-44)
8. LATCH (Lower Anchors and Tethers for CHildren) system (P. 1-23)
9. Rear seat belts (P. 1-10)

Refer to the page number indicated in parentheses for operating details.

EXTERIOR FRONT

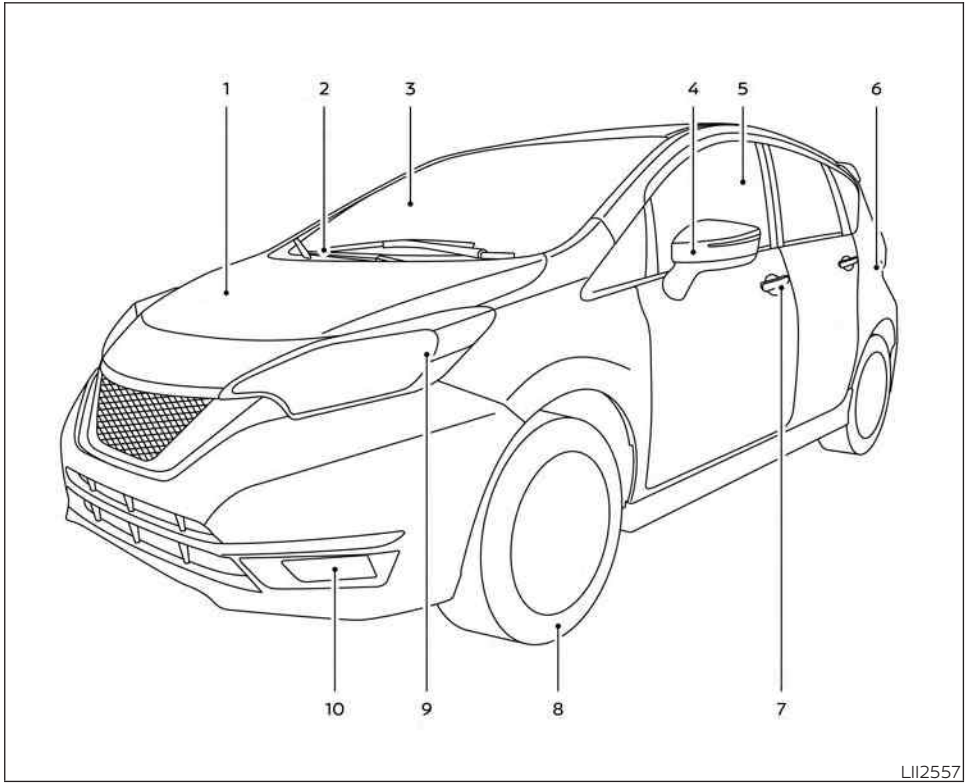

1. Engine hood (P. 3-26)
2. Wiper and washer switch (P. 2-26)
3. Windshield (P. 8-16)
4. Mirrors (P. 3-32)
5. Power windows (if so equipped) (P. 2-41)
6. Fuel-filler door (P. 3-28)
   Fuel-filler cap (P. 3-28)
   Recommended fuel (P. 10-2)
7. Door locks (P. 3-5)
   NISSAN Intelligent Key®
   (if so equipped) (P. 3-12)
   Keys (P. 3-2)
8. Tire pressure (P. 8-30)
   Flat tire (P. 6-3)
   Tire chains (P. 8-30)
9. Headlight and turn signal switch (P. 2-28)
   Daytime Running Lights (DRL) system (if so equipped) (P. 2-28)
   Replacing bulbs (P. 8-25)
10. Fog light switch (if so equipped) (P. 2-28)

Refer to the page number indicated in parentheses for operating details.

EXTERIOR REAR

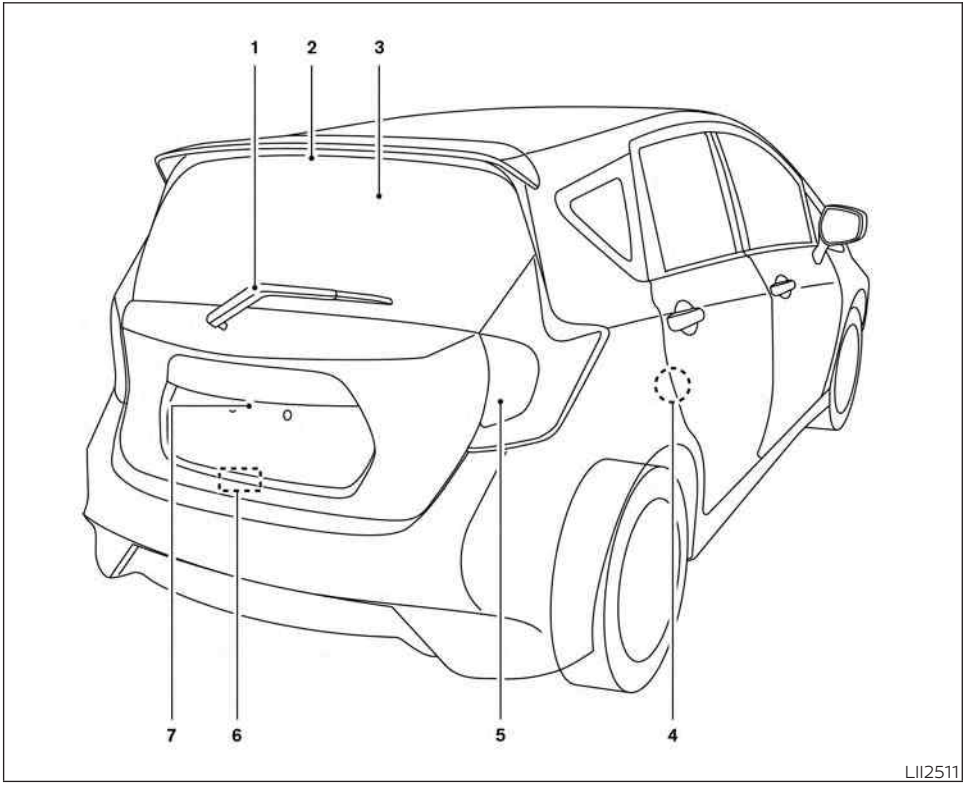

1. Rear wiper and washer switch (P. 2-26)
2. Rear window washer nozzle (P. 2-26)
3. Rear window defroster switch (P. 2-28)
4. Child safety rear door lock (P. 3-5)
5. Replacing bulbs (P. 8-25)
6. Interior hatch release (P. 3-27)
7. Rear hatch opener (P. 3-27)
   Rearview camera (if so equipped) (P. 4-8)

Refer to the page number indicated in parentheses for operating details.

PASSENGER COMPARTMENT

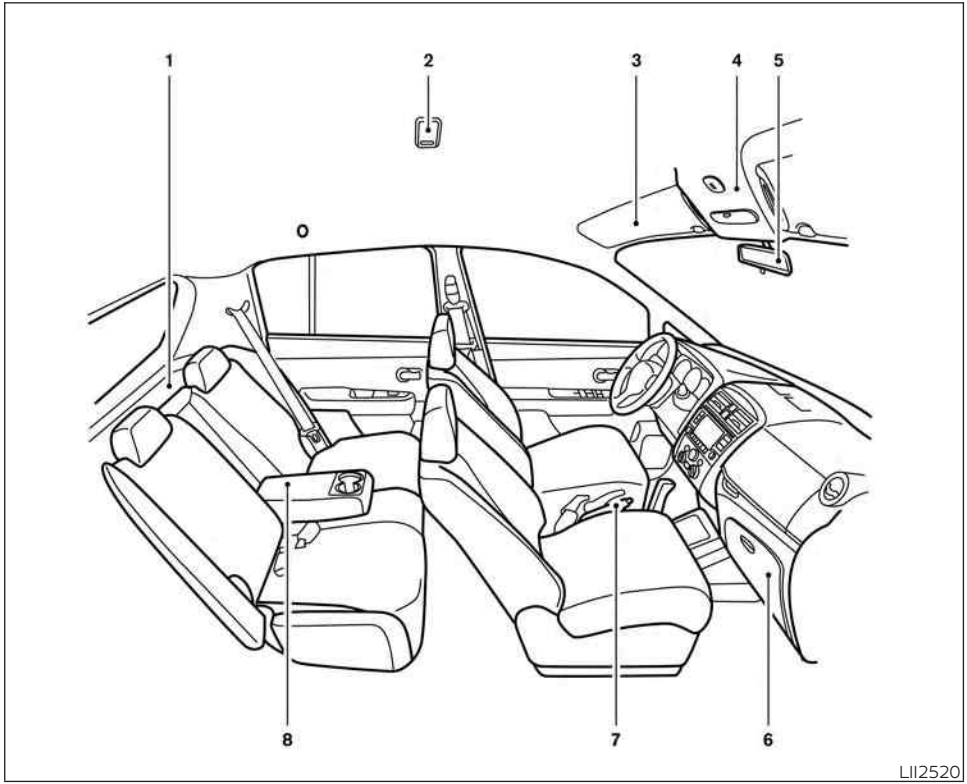

1. Cargo cover (if so equipped) (P. 2-35)
2. Interior lights (P. 2-43)
3. Sun visors (P. 3-31)
4. Map lights (P. 2-44)
5. Rearview mirror (P. 3-32)
6. Glove box (P. 2-35)
7. Parking brake (P. 5-23)
8. Rear armrest (if so equipped) (P. 1-2)

Refer to the page number indicated in parentheses for operating details.

INSTRUMENT PANEL

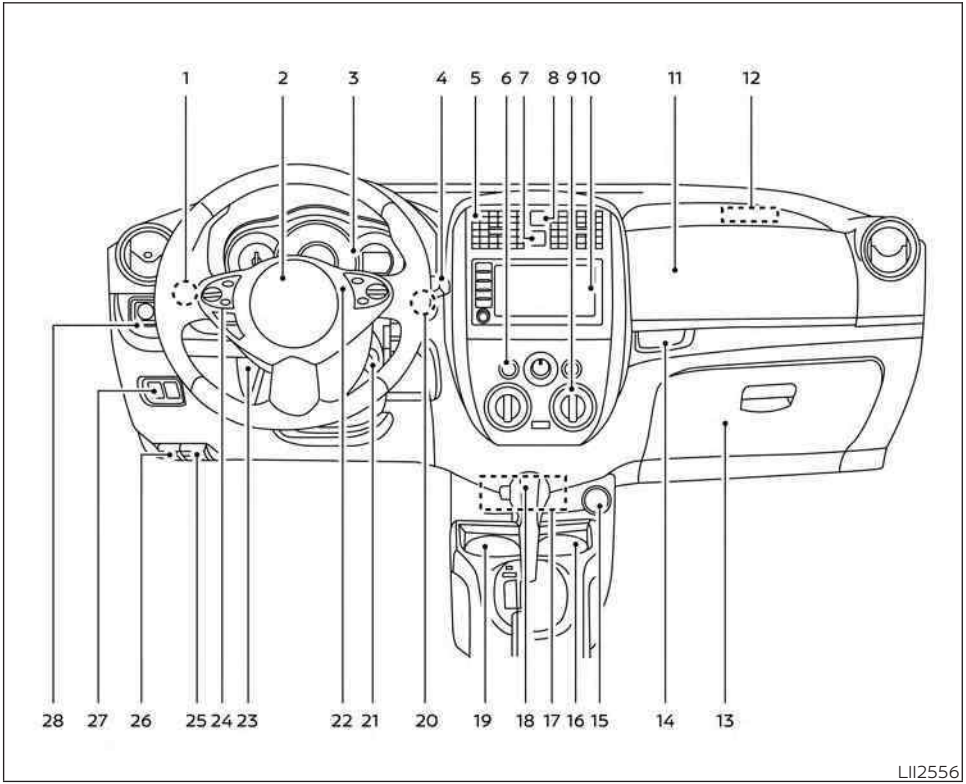

1. Headlight/fog light (if so equipped)/turn signal switch (P. 2-28)
2. Driver's supplemental air bag (P. 1-44)
   Horn (P. 2-32)
3. Meters and gauges (P. 2-3)
   Trip computer control switches (if so equipped) (P. 2-3)
4. Wiper and washer switch (P. 2-26)
5. Vents (P. 4-14)
6. Rear window and outside mirror (if so equipped) defroster switch (P. 2-28)
7. Hazard warning flasher switch (P. 6-2)
8. Front passenger air bag status light (P. 1-44)
9. Climate control (P. 4-15)
10. Audio system (P. 4-23)
11. Upper glove box (P. 2-35)
12. Passenger's supplemental air bag (P. 1-44)
13. Lower glove box (P. 2-35)
14. Upper glove box release handle (P. 2-35)
15. Power outlet (P. 2-34)
16. Cup holders (P. 2-35)

17. USB connection port (if so equipped) (P. 4-23)
    AUX IN jack (if so equipped) (P. 4-23)
18. Shift lever (P. 5-17)
19. Cup holders (P. 2-35)
20. Push-button ignition switch (if so equipped) (P. 5-11)
21. Ignition switch (if so equipped) (P. 5-9)
22. Cruise control switches (if so equipped) (P. 5-24)
23. Tilt steering (P. 3-31)
24. Bluetooth® Hands-Free Phone System (P. 4-2, 4-46)
    Audio control switches (P. 4-23)
    Trip computer control switches (if so equipped) (P. 2-3)
25. Hood release lever (P. 3-26)
26. Fuel-filler door release lever (P. 3-28)
27. Vehicle Dynamic Control (VDC) OFF switch (P. 2-33)
28. Outside mirror control switch (P. 3-33)

Refer to the page number indicated in parentheses for operating details.

ENGINE COMPARTMENT CHECK LOCATIONS

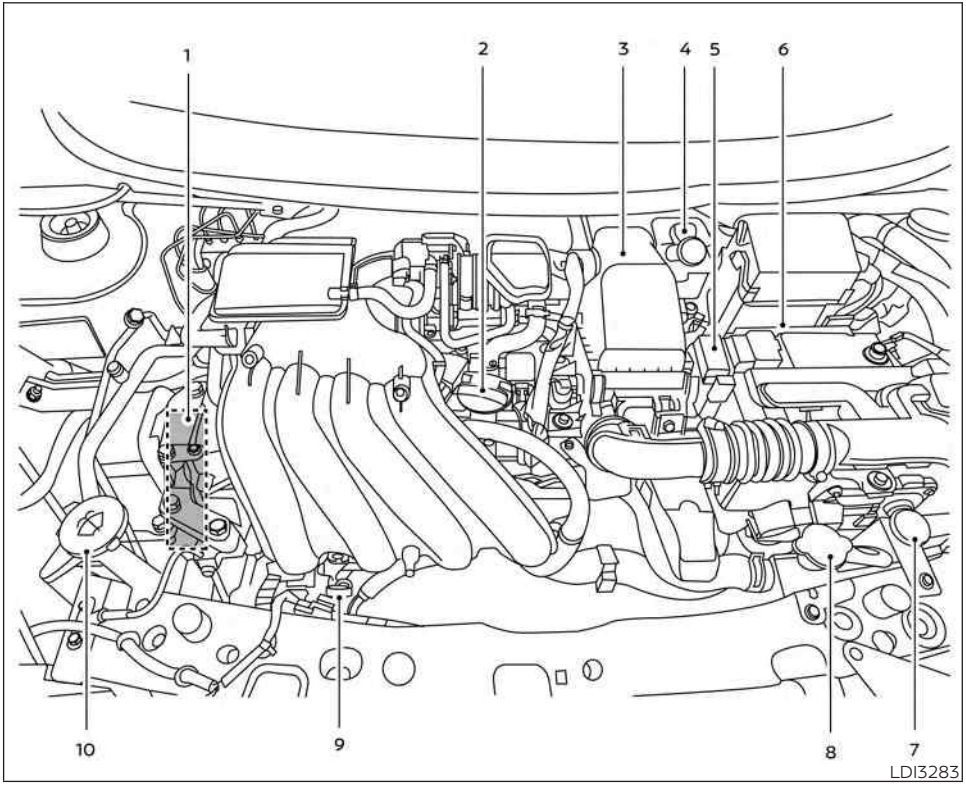

HR16DE engine

1. Drive belt location (P. 8-14)
2. Engine oil filler cap (P. 8-6)
3. Air cleaner (P. 8-16)
4. Brake and clutch (if so equipped) fluid reservoir (P. 8-9)
5. Fusible link (P. 8-19)
6. Battery (P. 8-12)
7. Engine coolant reservoir (P. 8-4)
8. Radiator cap (P. 8-4)
9. Engine oil dipstick (P. 8-6)
10. Windshield-washer fluid reservoir (P. 8-10)

Refer to the page number indicated in parentheses for operating details.

WARNING AND INDICATOR LIGHTS

Warning light	Name	Page
ABS or	Anti-lock Braking System (ABS) warning light	2-15
BRAKE or	Brake warning light	2-15
	Charge warning light	2-16
	Door open warning light	2-16
	Engine oil pressure warning light	2-16
	High temperature warning light (red) (if so equipped)	2-16

Warning light	Name	Page
	Low fuel warning light	2-17
	Low tire pressure warning light (if so equipped)	2-17
	Low windshield-washer fluid warning light (if so equipped)	2-19
KEY	NISSAN Intelligent Key® warning light (if so equipped)	2-19
P SHIFT	P position selecting warning light (if so equipped)	2-19
PS	Power steering warning light	2-19
	Seat belt warning light and chime	2-20

Warning light	Name	Page
	Supplemental air bag warning light	2-20

Indicator light	Name	Page
P	Continuously Variable Transmission (CVT) position indicator light (if so equipped)	2-21
CRUISE	CRUISE indicator light (if so equipped)	2-21
	Engine start operation indicator light (if so equipped)	2-21
	Front fog light indicator light (if so equipped)	2-21

Indicator light	Name	Page
	Front passenger air bag status light	2-21
	High beam indicator light (blue)	2-21
	Malfunction Indicator Light (MIL)	2-21
O/D OFF	Overdrive OFF indicator light (if so equipped)	2-22
	Security indicator light (if so equipped)	2-22
SET	SET indicator light (if so equipped)	2-23
	Side light and headlight indicator light (green) (if so equipped)	2-23

Indicator light	Name	Page
	Slip indicator light	2-22
	Turn signal/ hazard indicator lights	2-23
OFF	Vehicle Dynamic Control (VDC) OFF indicator light	2-23

1 Safety—Seats, seat belts and supplemental restraint system

Seats 1-2
Front manual seat adjustment 1-3
Folding rear seat 1-4
Center armrest (if so equipped) 1-5
Armrest (if so equipped for driver's side only) 1-6
Head restraints/headrests 1-6
Adjustable head restraint/headrest components 1-7
Non-adjustable head restraint/headrest components 1-7
Remove 1-8
Install 1-8
Adjust 1-9
Seat belts 1-10
Precautions on seat belt usage 1-10
Seat belt warning light 1-13
Pregnant women 1-13
Injured persons 1-13
Three-point type seat belt with retractor 1-13
Seat belt extenders 1-19
Seat belt maintenance 1-19
Child safety 1-20
Infants 1-21
Small children 1-21
Larger children 1-21
Child restraints 1-23
Precautions on child restraints 1-23
LATCH (Lower Anchors and Tethers for CHildren) system 1-25
Rear-facing child restraint installation using LATCH 1-28
Rear-facing child restraint installation using the seat belts 1-30
Forward-facing child restraint installation using LATCH 1-32
Forward-facing child restraint installation using the seat belts 1-36
Booster seats 1-41
Supplemental Restraint System (SRS) 1-44
Precautions on SRS 1-44
Supplemental air bag warning labels 1-63
Supplemental air bag warning light 1-63

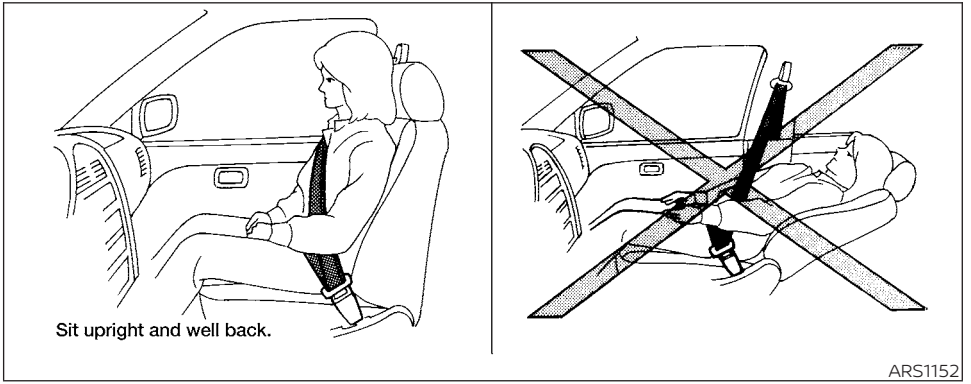

⚠ WARNING

- **Do not ride in a moving vehicle when the seatback is reclined. This can be dangerous. The shoulder belt will not be against your body. In an accident, you could be thrown into it and receive neck or other serious injuries. You could also slide under the lap belt and receive serious internal injuries.**

- **For the most effective protection when the vehicle is in motion, the seat should be upright. Always sit well back and upright in the seat with both feet on the floor and adjust the seat properly. For additional information, refer to "Precautions on seat belt usage" in this section.**
- **After adjustment, gently rock in the seat to make sure it is securely locked.**

- **Do not leave children unattended inside the vehicle. They could unknowingly activate switches or controls or make the vehicle move. Unattended children could become involved in serious accidents.**
- **To help avoid risk of injury or death through unintended operation of the vehicle and/or its systems, do not leave children, people who require the assistance of others or pets unattended in your vehicle. Additionally, the temperature inside a closed vehicle on a warm day can quickly become high enough to cause a significant risk of injury or death to people and pets.**
- **Do not adjust the driver's seat while driving so full attention may be given to vehicle operation. The seat may move suddenly and could cause loss of control of the vehicle.**
- **The seatback should not be reclined any more than needed for comfort. Seat belts are most effective when the passenger sits well back and straight up in the seat. If the seatback is reclined, the risk of sliding under the lap belt and being injured is increased.**

⚠ CAUTION

When adjusting the seat positions, be sure not to contact any moving parts to avoid possible injuries and/or damage.

FRONT MANUAL SEAT ADJUSTMENT

Your vehicle seats can be adjusted manually. For additional information about adjusting the seats, refer to the steps outlined in this section.

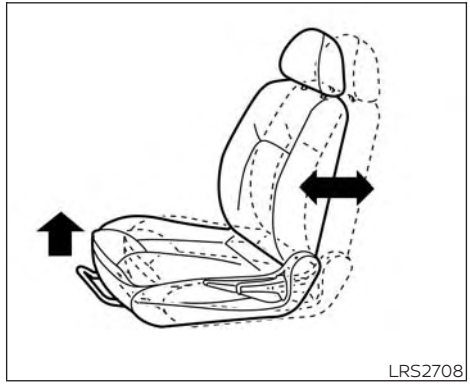

Forward and backward

Pull the center of the bar up and hold it while you slide the seat forward or backward to the desired position. Release the bar to lock the seat in position.

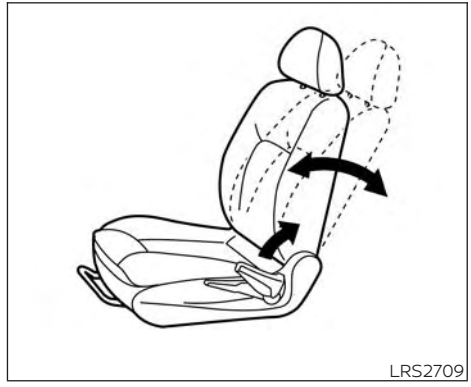

Reclining

To recline the seatback, pull the lever up and lean back. To bring the seatback forward, pull the lever up and lean your body forward. Release the lever to lock the seatback in position.

The reclining feature allows adjustment of the seatback for occupants of different sizes for added comfort and to help obtain proper seat belt fit. For additional information, refer to "Precautions on seat belt usage" in this section. Also, the seatback can be reclined to allow occupants to rest when the vehicle is stopped and the shift

lever is in P (Park) or N (Neutral) position with the parking brake fully applied.

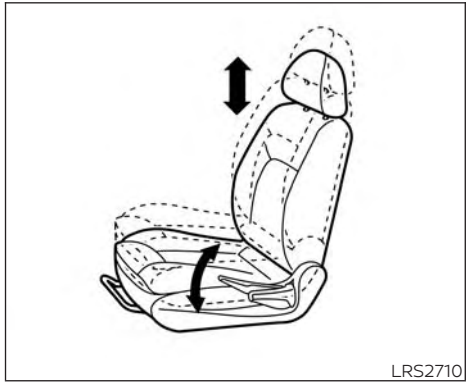

Seat lifter (if so equipped for driver's seat)

Pull up or push down the adjusting lever to adjust the seat height until the desired position is achieved.

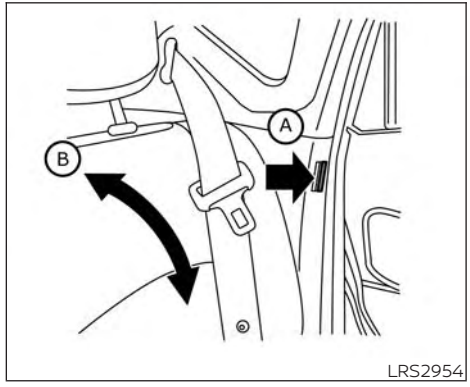

FOLDING REAR SEAT

1. Ensure the rear outboard seat belt tongue is properly stowed in the rear trim slot next to the door Ⓐ before moving the rear seatback Ⓑ in order to prevent the outboard seat belt from getting caught behind the rear seatback.

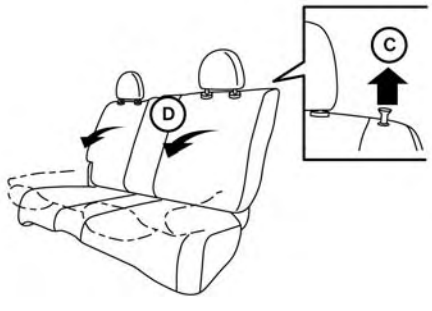

LRS2701

2. Pull the knob Ⓒ and fold Ⓓ the rear seatback down.

⚠ WARNING

- **Never allow anyone to ride in the cargo area or on the rear seat when it is in the fold-down position. Use of these areas by passengers without proper restraints could result in serious injury or death in an accident or sudden stop.**
- **Properly secure all cargo with ropes or straps to help prevent it from sliding or shifting. Do not place cargo higher than the seatbacks. In a sudden stop or collision, unsecured cargo could cause personal injury.**
- **When returning the seatbacks to the upright position, be certain they are completely secured in the latched position. If they are not completely secured, passengers may be injured in an accident or sudden stop.**

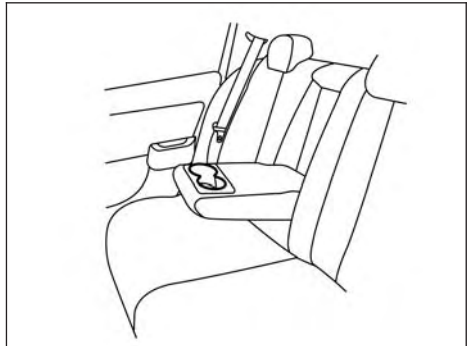
LRS2733

CENTER ARMREST (if so equipped)

Pull the armrest down as shown.

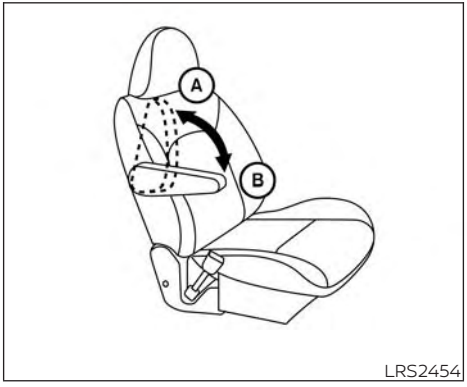

ARMREST (if so equipped for driver's side only)

To use the armrest, pull it down as shown.

Ⓐ Stowed position

Ⓑ Resting position

⚠ WARNING

Head restraints/headrests supplement the other vehicle safety systems. They may provide additional protection against injury in certain rear end collisions. Adjustable head restraints/headrests must be adjusted properly, as specified in this section. Check the adjustment after someone else uses the seat. Do not attach anything to the head restraint/headrest stalks or remove the head restraint/headrest. Do not use the seat if the head restraint/headrest has been removed. If the head restraint/headrest was removed, reinstall and properly adjust the head restraint/headrest before an occupant uses the seating position. Failure to follow these instructions can reduce the effectiveness of the head restraints/headrests. This may increase the risk of serious injury or death in a collision.

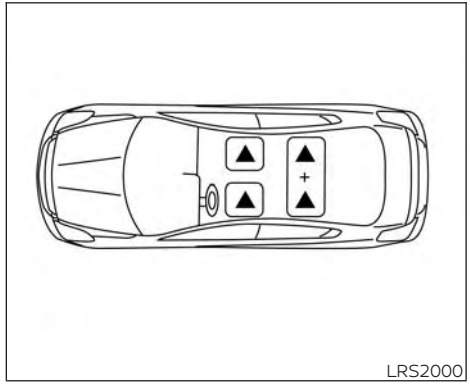

The illustration shows the seating positions equipped with head restraints/headrests.

▲ Indicates the seating position is equipped with a head restraint.

■ Indicates the seating position is equipped with a headrest.

+ Indicates the seating position is not equipped with a head restraint or headrest (if applicable).

- Your vehicle is equipped with a head restraint/headrest that may be integrated, adjustable or non-adjustable.

- Adjustable head restraints/headrests have multiple notches along the stalk(s) to lock them in a desired adjustment position.
- The non-adjustable head restraints/headrests have a single locking notch to secure them to the seat frame.
- Proper Adjustment:
  - For the adjustable type, align the head restraint/headrest so the center of your ear is approximately level with the center of the head restraint/headrest.
  - If your ear position is still higher than the recommended alignment, place the head restraint/headrest at the highest position.
- If the head restraint/headrest has been removed, ensure that it is reinstalled and locked in place before riding in that designated seating position.

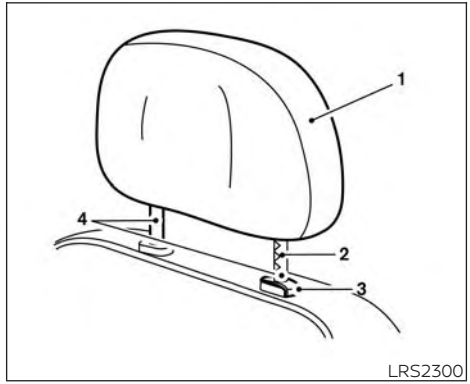

ADJUSTABLE HEAD RESTRAINT/ HEADREST COMPONENTS

1. Removable head restraint/headrest
2. Multiple notches
3. Lock knob
4. Stalks

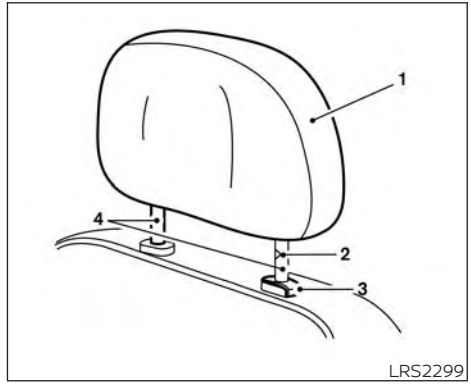

NON-ADJUSTABLE HEAD RESTRAINT/HEADREST COMPONENTS

1. Removable head restraint/headrest
2. Single notch
3. Lock knob
4. Stalks

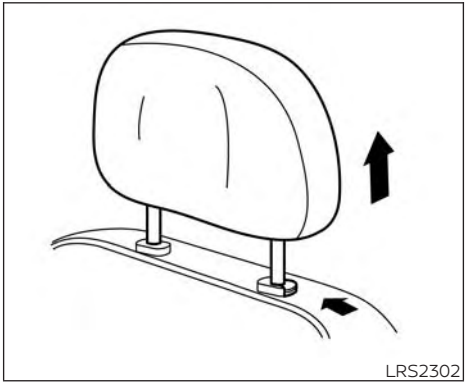

REMOVE

Use the following procedure to remove the head restraint/headrest:

1. Pull the head restraint/headrest up to the highest position.
2. Push and hold the lock knob.
3. Remove the head restraint/headrest from the seat.
4. Store the head restraint/headrest properly in a secure place so it is not loose in the vehicle.
5. Reinstall and properly adjust the head restraint/headrest before an occupant uses the seating position.

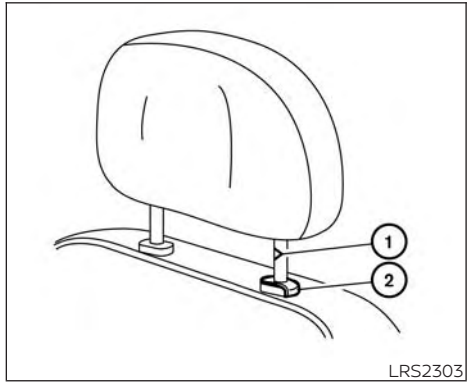

INSTALL

1. Align the head restraint/headrest stalks with the holes in the seat. Make sure that the head restraint/headrest is facing the correct direction. The stalk with the notch (notches) ① must be installed in the hole with the lock knob ②.
2. Push and hold the lock knob and push the head restraint/headrest down.
3. Properly adjust the head restraint/headrest before an occupant uses the seating position.

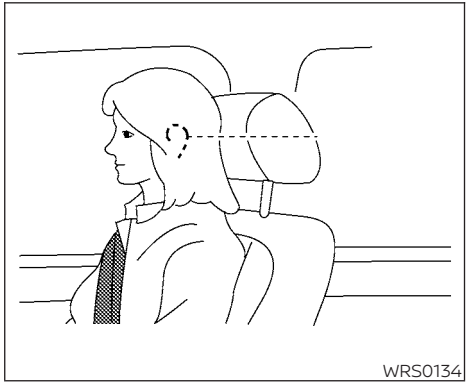

ADJUST

For adjustable head restraint/headrest

Adjust the head restraint/headrest so the center is level with the center of your ears. If your ear position is still higher than the recommended alignment, place the head restraint/headrest at the highest position.

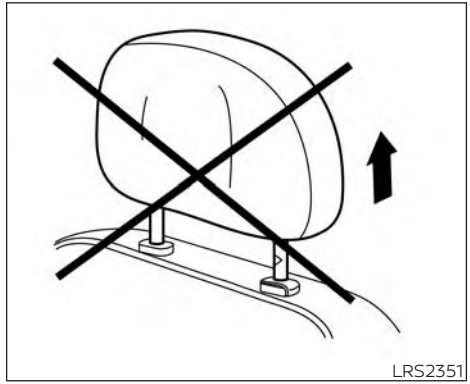

For non-adjustable head restraint/headrest

Make sure the head restraint/headrest is positioned so the lock knob is engaged in the notch before riding in that designated seating position.

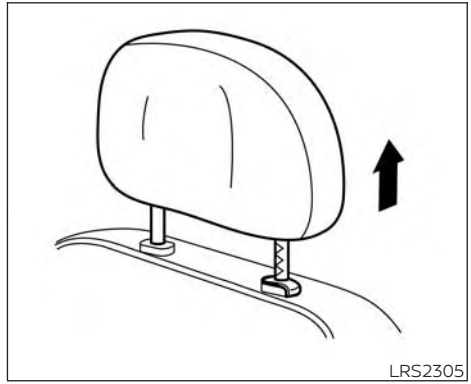

Raise

To raise the head restraint/headrest, pull it up.

Make sure the head restraint/headrest is positioned so the lock knob is engaged in the notch before riding in that designated seating position.

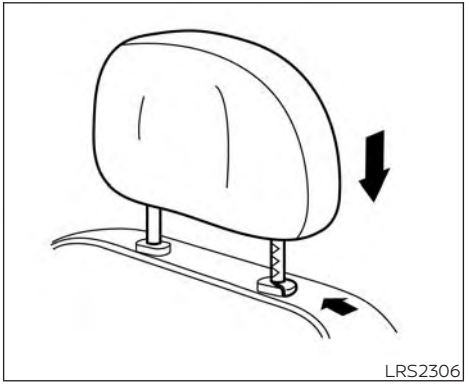
LRS2306

Lower

To lower, push and hold the lock knob and push the head restraint/headrest down.

Make sure the head restraint/headrest is positioned so the lock knob is engaged in the notch before riding in that designated seating position.

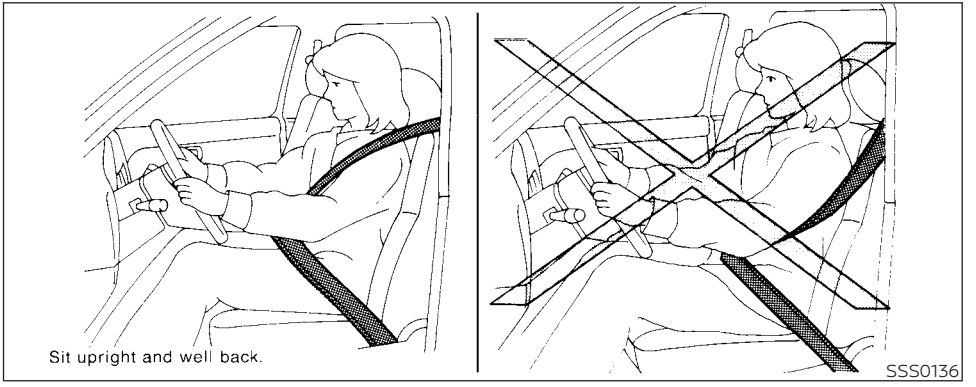

PRECAUTIONS ON SEAT BELT USAGE

If you are wearing your seat belt properly adjusted and you are sitting upright and well back in your seat with both feet on the floor, your chances of being injured or killed in a collision and/or the severity of injury may be greatly reduced. NISSAN strongly encourages you and all of your passengers to buckle up every time you drive, even if your seating position includes a supplemental air bag.

Most U.S. states and Canadian provinces or territories specify that seat belts be worn at all times when a vehicle is being driven.

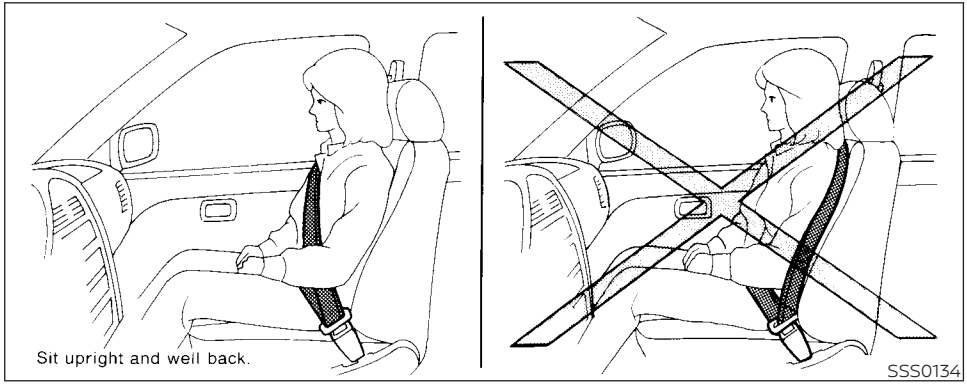

⚠ WARNING

- **Every person who drives or rides in this vehicle should use a seat belt at all times. Children should be in the rear seats and in an appropriate restraint.**

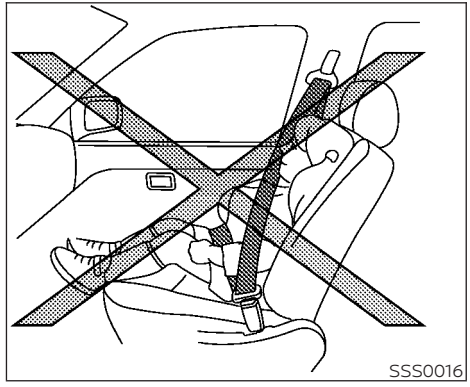

⚠ WARNING

- **The seat belt should be properly adjusted to a snug fit. Failure to do so may reduce the effectiveness of the entire restraint system and increase the chance or severity of injury in an accident. Serious injury or death can occur if the seat belt is not worn properly.**

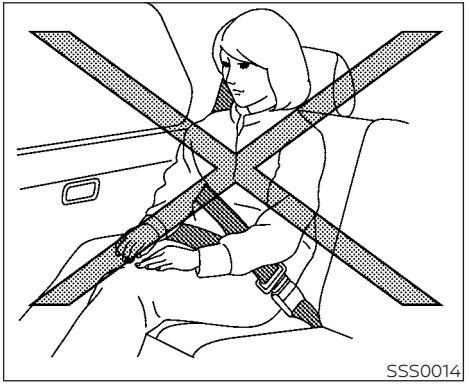

⚠ WARNING

- **Always route the shoulder belt over your shoulder and across your chest. Never put the belt behind your back, under your arm or across your neck. The belt should be away from your face and neck, but not falling off your shoulder.**
- **Position the lap belt as low and snug as possible AROUND THE HIPS, NOT THE WAIST. A lap belt worn too high could increase the risk of internal injuries in an accident.**
- **Be sure the seat belt tongue is securely fastened to the proper buckle.**
- **Do not wear the seat belt inside out or twisted. Doing so may reduce its effectiveness.**
- **Do not allow more than one person to use the same seat belt.**
- **Never carry more people in the vehicle than there are seat belts.**
- **If the seat belt warning light glows continuously while the ignition is turned ON with all doors closed and all seat belts fastened, it may indicate a malfunction in the system. Have the system checked. It is recommended that you visit a NISSAN dealer for this service.**
- **No changes should be made to the seat belt system. For example, do not modify the seat belt, add material, or install devices that may change the seat belt routing or tension. Doing so may affect the operation of the seat belt system. Modifying or tampering with the seat belt system may result in serious personal injury.**
- **Once seat belt pretensioner(s) have activated, they cannot be reused and must be replaced together with the retractor. It is recommended that you visit a NISSAN dealer for this service.**
- **All seat belt assemblies, including retractors and attaching hardware, should be inspected after any collision. It is recommended that you visit a NISSAN dealer for this service. NISSAN recommends that all seat belt assemblies in use during a collision be replaced unless the collision was minor and the belts show no damage and continue to operate properly. Seat belt assemblies not in use during a collision should also be inspected and replaced if either damage or improper operation is noted.**
- **All child restraints and attaching hardware should be inspected after any collision. Always follow the restraint manufacturer's inspection instructions and replacement recommendations. The child restraints should be replaced if they are damaged.**

SEAT BELT WARNING LIGHT

Both the driver's and passenger's front seats are equipped with a seat belt warning light. The warning light, located on the instrument panel, will show the status of the driver and passenger seat belt.

NOTE:

The front passenger seat belt warning light will not light up if the seat is not occupied.

For additional information, refer to "Warning lights, indicator lights and audible reminders" in the "Instruments and controls" section of this manual.

PREGNANT WOMEN

NISSAN recommends that pregnant women use seat belts. The seat belt should be worn snug and always position the lap belt as low as possible around the hips, not the waist. Place the shoulder belt over your shoulder and across your chest. Never run the lap/shoulder belt over your abdominal area. Contact your doctor for specific recommendations.

INJURED PERSONS

NISSAN recommends that injured persons use seat belts. Check with your doctor for specific recommendations.

THREE-POINT TYPE SEAT BELT WITH RETRACTOR

⚠ WARNING

- **Every person who drives or rides in this vehicle should use a seat belt at all times.**
- **Do not ride in a moving vehicle when the seatback is reclined. This can be dangerous. The shoulder belt will not be against your body. In an accident, you could be thrown into it and receive neck or other serious injuries. You could also slide under the lap belt and receive serious internal injuries.**
- **For the most effective protection when the vehicle is in motion, the seat should be upright. Always sit well back and upright in the seat with both feet on the floor and adjust the seat belt properly.**

- **Do not allow children to play with the seat belts. Most seating positions are equipped with Automatic Locking Retractor (ALR) mode seat belts. If the seat belt becomes wrapped around a child's neck with the ALR mode activated, the child can be seriously injured or killed if the seat belt retracts and becomes tight. This can occur even if the vehicle is parked. Unbuckle the seat belt to release the child. If the seat belt cannot be unbuckled or is already unbuckled, release the child by cutting the seat belt with a suitable tool (such as a knife or scissors) to release the seat belt.**

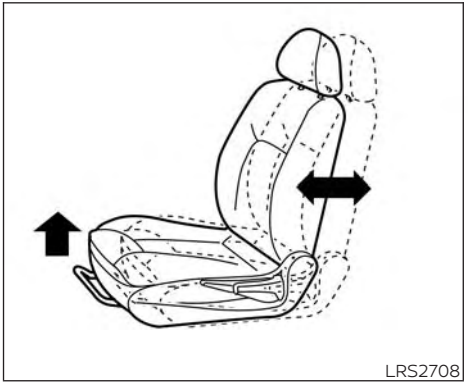
LRS2708

Fastening the seat belts

1. Adjust the seat. For additional information, refer to "Seats" in this section.

LRS3087

2. Slowly pull the seat belt out of the retractor and insert the tongue into the buckle Ⓐ until you hear and feel the latch engage.

   - **The retractor is designed to lock during a sudden stop or on impact. A slow pulling motion permits the seat belt to move, and allows you some freedom of movement in the seat.**
   - **If the seat belt cannot be pulled from its fully retracted position, firmly pull the belt and release it. Then smoothly pull the belt out of the retractor.**

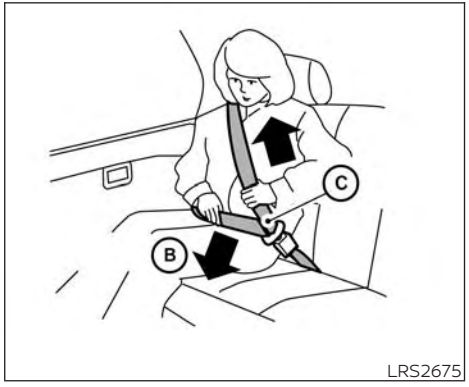

3. Position the lap belt portion **low and snug on the hips** Ⓑ as shown.
4. Pull the shoulder belt portion toward the retractor to take up extra slack Ⓒ. Be sure the shoulder belt is routed over your shoulder and across your chest.

The front passenger seat and the rear seating positions' three-point seat belts have two modes of operation:

- Emergency Locking Retractor (ELR)
- Automatic Locking Retractor (ALR)

The ELR mode allows the seat belt to extend and retract to allow the driver and passengers some freedom of movement in the seat. The ELR locks the seat belt when the vehicle slows down rapidly or during certain impacts.

The ALR mode (child restraint mode) locks the seat belt for child restraint installation.

When the ALR mode is activated, the seat belt cannot be extended again until the seat belt tongue is detached from the buckle and fully retracted. The seat belt returns to the ELR mode after the seat belt fully retracts. For additional information, refer to "Child restraints" in this section.

The ALR mode should be used only for child restraint installation. During normal seat belt use by an occupant, the ALR mode should not be activated. If it is activated, it may cause uncomfortable seat belt tension. It can also change the operation of the front passenger air bag. For additional information, refer to "Supplemental air bag warning light" in this section.

⚠ WARNING

When fastening the seat belts, be certain that the seatbacks are completely secured in the latched position. If they are not completely secured, passengers may be injured in an accident or sudden stop.

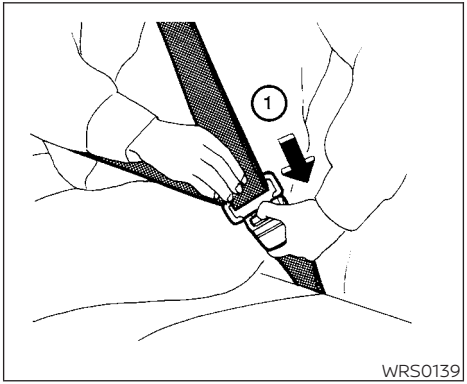

Unfastening the seat belts

To unfasten the seat belt, press the button on the buckle ①. The seat belt automatically retracts.

Checking seat belt operation

Seat belt retractors are designed to lock seat belt movement by two separate methods:

- When the seat belt is pulled quickly from the retractor
- When the vehicle slows down rapidly

To increase your confidence in the seat belts, check the operation as follows:

- Grasp the shoulder belt and pull forward quickly. The retractor should lock and restrict further belt movement.

If the retractor does not lock during this check, get the system checked. It is recommended that you visit a NISSAN dealer for this service, or to learn more about seat belt operation.

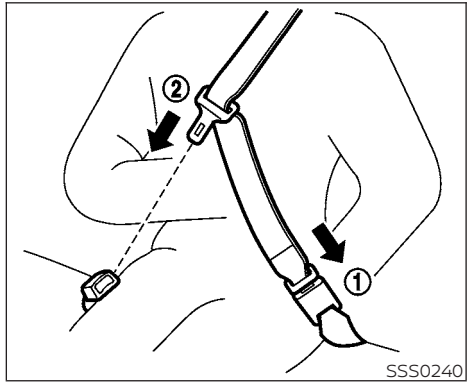

Center of the rear bench seat

The center seat belt has a connector tongue ① and a seat belt tongue ②. Both the connector tongue and the seat belt tongue must be securely latched for proper seat belt operation.

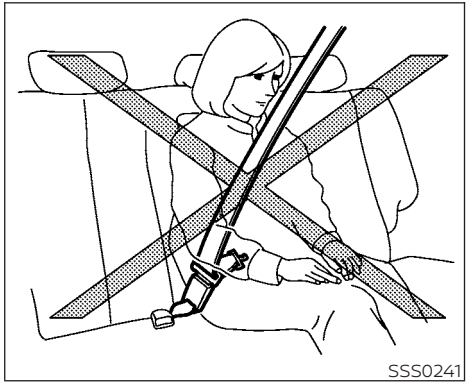

⚠ WARNING

- **Always fasten the connector tongue and the seat belt in the order shown.**
- **Always make sure both the connector tongue and the seat belt tongue are secured when using the seat belt or installing a child restraint. Do not use the seat belt or child restraint with only the seat belt tongue attached. This could result in serious personal injury in case of an accident or a sudden stop.**

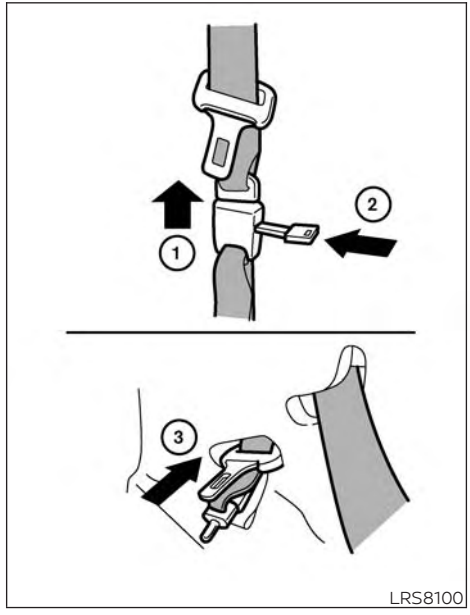

Stowing the center seat belt

When folding down the rear seat, the rear center seat belt can be retracted into a stowed position.

1. Hold the connector tongue ① so that the seat belt does not retract suddenly when the tongue is released from the connector buckle. Release the connector tongue by inserting a suitable tool such as a key ② into the connector buckle.
2. Retract the seat belt and store the seat belt tongue on the stowed position ③.

⚠ WARNING

Do not unfasten the rear center seat belt connector except when folding down the rear seat.

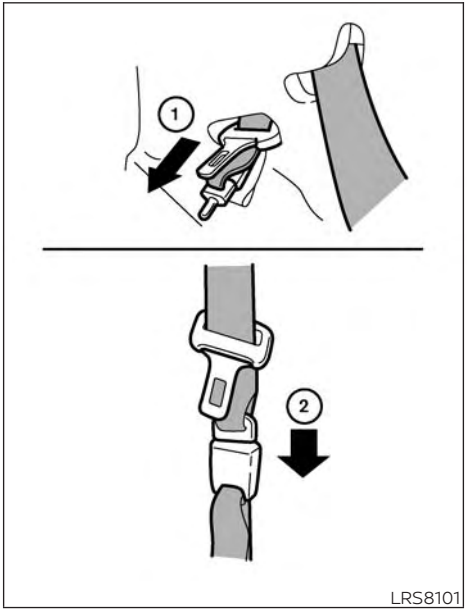

Attaching the center seat belt

Always be sure the center seat belt connector tongue and connector buckle are attached. Disconnect only when folding down the rear seat.

To connect the buckle:

1. Pull the seat belt tongue and connector tongue from the stowed position ①.
2. Pull the seat belt and secure the connector buckle until it clicks ②.

The center seat belt connector tongue can be attached only into the rear center seat belt connector buckle.

To fasten the seat belt, refer to "Fastening the seat belts" in this section.

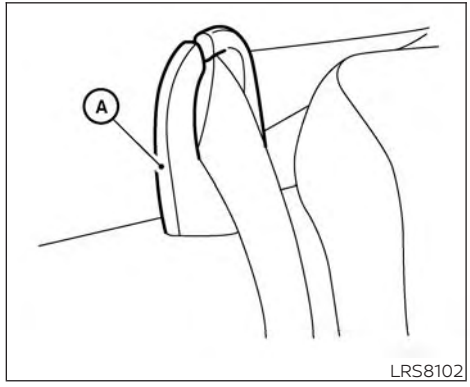

⚠ WARNING

- **When attaching the rear center seat belt connector, be certain that the seatbacks are completely secured in the latched position and the rear center seat belt connector is completely secured.**
- **If the rear center seat belt connector and the seatbacks are not secured in the correct position, serious personal injury may result in an accident or sudden stop.**
- **Make sure to wear the rear center seat belt with the seat belt passing through the path Ⓐ.**

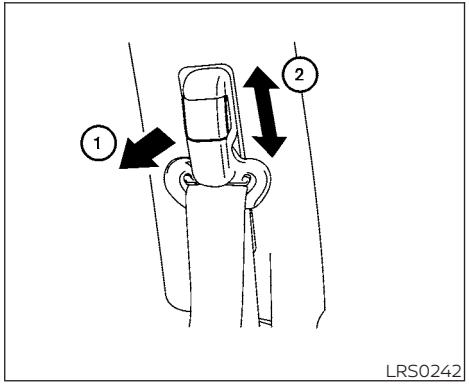

Shoulder belt height adjustment (front seats)

The shoulder belt anchor height should be adjusted to the position best for you. For additional information, refer to "Precautions on seat belt usage" in this section. To adjust, pull out the adjustment button ① and move the shoulder belt anchor to the desired position ②, so the belt passes over the center of the shoulder. The belt should be away from your face and neck, but not falling off your shoulder. Release the adjustment button to lock the shoulder belt anchor into position.

⚠ WARNING

- **After adjustment, release the adjustment button and try to move the shoulder belt anchor up and down to make sure it is securely fixed in position.**
- **The shoulder belt anchor height should be adjusted to the position best for you. Failure to do so may reduce the effectiveness of the entire restraint system and increase the chance or severity of injury in an accident.**

SEAT BELT EXTENDERS

If, because of body size or driving position, it is not possible to properly fit the lap/shoulder belt and fasten it, an extender that is compatible with the installed seat belts is available for purchase. The extender adds approximately 8 in (200 mm) of length and may be used for either the driver or front passenger seating position. It is recommended that you visit a NISSAN dealer for assistance with purchasing an extender if an extender is required.

⚠ WARNING

- **Only NISSAN seat belt extenders, made by the same company which made the original equipment seat belts, should be used with NISSAN seat belts.**
- **Adults and children who can use the standard seat belt should not use an extender. Such unnecessary use could result in serious personal injury in the event of an accident.**
- **Never use seat belt extenders to install child restraints. If the child restraint is not secured properly, the child could be seriously injured or killed in a collision or a sudden stop.**

SEAT BELT MAINTENANCE

- **To clean the seat belt webbing,** apply a mild soap solution or any solution recommended for cleaning upholstery or carpet. Then wipe with a cloth and allow the seat belts to dry in the shade. Do not allow the seat belts to retract until they are completely dry.

- **If dirt builds up in the shoulder belt guide of the seat belt anchors,** the seat belts may retract slowly. Wipe the shoulder belt guide with a clean, dry cloth.
- **Periodically check to see that the seat belt and the metal components,** such as buckles, tongues, retractors, flexible wires and anchors, work properly. If loose parts, deterioration, cuts or other damage on the webbing is found, the entire seat belt assembly should be replaced.

⚠ WARNING

Do not allow children to play with the seat belts. Most seating positions are equipped with Automatic Locking Retractor (ALR) mode seat belts. If the seat belt becomes wrapped around a child's neck with the ALR mode activated, the child can be seriously injured or killed if the seat belt retracts and becomes tight. This can occur even if the vehicle is parked. Unbuckle the seat belt to release the child. If the seat belt cannot be unbuckled or is already unbuckled, release the child by cutting the seat belt with a suitable tool (such as a knife or scissors) to release the seat belt.

Children need adults to help protect them. They need to be properly restrained.

In addition to the general information in this manual, child safety information is available from many other sources, including doctors, teachers, government traffic safety offices, and community organizations. Every child is different, so be sure to learn the best way to transport your child.

There are three basic types of child restraint systems:

- Rear-facing child restraints
- Forward-facing child restraints
- Booster seats

The proper restraint depends on the child's size. Generally, infants up to about 1 year and less than 20 lbs. (9 kg) should be placed in rear-facing child restraints. Forward-facing child restraints are available for children who outgrow rear-facing child restraints and are at least 1 year old. Booster seats are used to help position a vehicle lap/shoulder belt on a child who can no longer use a forward-facing child restraint.

⚠ WARNING

Infants and children need special protection. The vehicle's seat belts may not fit them properly. The shoulder belt may come too close to the face or neck. The lap belt may not fit over their small hip bones. In an accident, an improperly fitting seat belt could cause serious or fatal injury. Always use appropriate child restraints.

All U.S. states and Canadian provinces or territories require the use of approved child restraints for infants and small children. For additional information, refer to "Child restraints" in this section.

A child restraint may be secured in the vehicle by using either the LATCH (Lower Anchors and Tethers for CHildren) system or with the vehicle seat belt. For additional information, refer to "Child restraints" in this section.

NISSAN recommends that all pre-teens and children be restrained in the rear seat. Studies show that children are safer when properly restrained in the rear seat than in the front seat.

This is especially important because your vehicle has a supplemental restraint system (air bag system) for the front passenger. For additional information, refer to "Supplemental Restraint System (SRS)" in this section.

INFANTS

Infants up to at least 1 year old should be placed in a rear-facing child restraint. NISSAN recommends that infants be placed in child restraints that comply with Federal Motor Vehicle Safety Standards or Canadian Motor Vehicle Safety Standards. You should choose a child restraint that fits your vehicle and always follow the manufacturer's instructions for installation and use.

SMALL CHILDREN

Children that are over 1 year old and weigh at least 20 lbs. (9 kg) should remain in a rear-facing child restraint as long as possible up to the height or weight limit of the child restraint. Children who outgrow the height or weight limit of the rear-facing child restraint and are at least 1 year old should be secured in a forward-facing child restraint with a harness. Refer to the manufacturer's instructions for minimum and maximum weight and height recommendations. NISSAN recommends that small children be placed in child restraints that comply with Federal Motor Vehicle Safety Standards or Canadian Motor Vehicle Safety Standards. You should choose a child restraint that fits your vehicle and always follow the manufacturer's instructions for installation and use.

LARGER CHILDREN

Children should remain in a forward-facing child restraint with a harness until they reach the maximum height or weight limit allowed by the child restraint manufacturer.

Once a child outgrows the height or weight limit of the harness-equipped forward-facing child restraint, NISSAN recommends that the child be placed in a commercially available booster seat to obtain proper seat belt fit. For a seat belt to fit properly, the booster seat should raise the child so that the shoulder belt is properly positioned across the chest and the top, middle portion of the shoulder. The shoulder belt should not cross the neck or face and should not fall off the shoulder. The lap belt should lie snugly across the lower hips or upper thighs, not the abdomen. A booster seat can only be used in seating positions that have a three-point type seat belt. The booster seat should fit the vehicle seat and have a label certifying that it complies with Federal Motor Vehicle Safety Standards or Canadian Motor Vehicle Safety Standards.

A booster seat should be used until the child can pass the seat belt fit test below:

- Are the child's back and hips against the vehicle seatback?
- Is the child able to sit without slouching?
- Do the child's knees bend easily over the front edge of the seat with feet flat on the floor?
- Can the child safely wear the seat belt (lap belt low and snug across the hips and shoulder belt across mid-chest and shoulder)?
- Is the child able to use the properly adjusted head restraint/headrest?
- Will the child be able to stay in position for the entire ride?

LRS2690

If you answered no to any of these questions, the child should remain in a booster seat using a three-point type seat belt.

NOTE:

Laws in some communities may follow different guidelines. Check local and state regulations to confirm your child is using the correct restraint system before traveling.

⚠ WARNING

Never let a child stand or kneel on any seat and do not allow a child in the cargo area. The child could be seriously injured or killed in a sudden stop or collision.

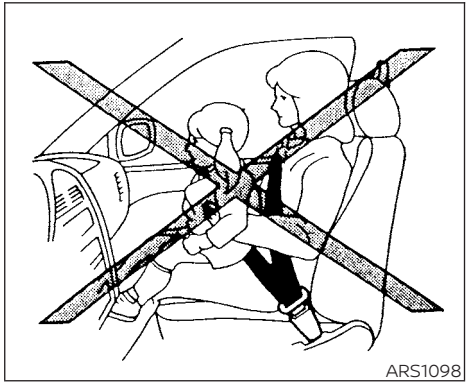
ARS1098

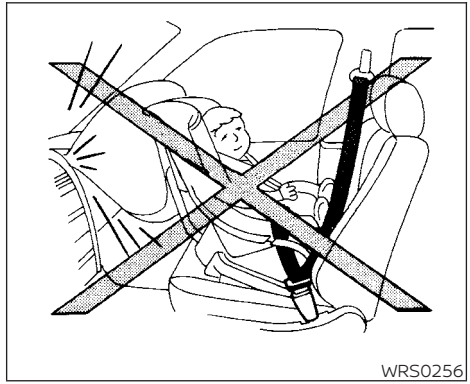
WRS0256

PRECAUTIONS ON CHILD RESTRAINTS

⚠ WARNING

- **Failure to follow the warnings and instructions for proper use and installation of child restraints could result in serious injury or death of a child or other passengers in a sudden stop or collision:**
  - **The child restraint must be used and installed properly. Always follow all of the child restraint manufacturer's instructions for installation and use.**
  - **Infants and children should never be held on anyone's lap. Even the strongest adult cannot resist the forces of a collision.**
  - **Do not put a seat belt around both a child and another passenger.**
  - **NISSAN recommends that all child restraints be installed in the rear seat. Studies show that children are safer when properly restrained in the rear seat than in the front seat. If you must install a forward-facing child restraint in the front seat, refer to "Forward-facing child restraint installation using the seat belts" in this section.**
  - **Even with the NISSAN Advanced Air Bag System, never install a rear-facing child restraint in the front seat. An inflating air bag could seriously injure or kill a child. A rear-facing child restraint must only be used in the rear seat.**

- **Be sure to purchase a child restraint that will fit the child and vehicle. Some child restraints may not fit properly in your vehicle.**
- **Child restraint anchorages are designed to withstand only loads imposed by correctly fitted child restraints. Under no circumstances are they to be used to attach adult seat belts, or other items or equipment to the vehicle. Doing so could damage the child restraint anchorages. The child restraint will not be properly installed using the damaged anchorage, and a child could be seriously injured or killed in a collision.**
- **Never use the anchor points for adult seat belts or other items.**
- **A child restraint with a top tether strap should not be used in the front passenger seat.**
- **Keep seatbacks as upright as possible after fitting the child restraint.**
- **Infants and children should always be placed in an appropriate child restraint while in the vehicle.**

- **When the child restraint is not in use, keep it secured with the LATCH system or a seat belt. In a sudden stop or collision, loose objects can injure occupants or damage the vehicle.**

⚠ CAUTION

A child restraint in a closed vehicle can become very hot. Check the seating surface and buckles before placing a child in the child restraint.

This vehicle is equipped with a universal child restraint anchor system, referred to as the LATCH (Lower Anchors and Tethers for CHildren) system. Some child restraints include rigid or webbing-mounted attachments that can be connected to these anchors. For additional information, refer to "LATCH (Lower Anchors and Tethers for CHildren) system" in this section.

If you do not have a LATCH compatible child restraint, the vehicle seat belts can be used.

Several manufacturers offer child restraints for infants and children of various sizes. When selecting any child restraint, keep the following points in mind:

- Choose only a restraint with a label certifying that it complies with Federal Motor Vehicle Safety Standard 213 or Canadian Motor Vehicle Safety Standard 213.
- Check the child restraint in your vehicle to be sure it is compatible with the vehicle's seat and seat belt system.
- If the child restraint is compatible with your vehicle, place your child in the child restraint and check the various adjustments to be sure the child restraint is compatible with your child. Choose a child restraint that is designed for your child's height and weight. Always follow all recommended procedures.
- If the combined weight of the child and child restraint is less than 65 lbs. (29.5 kg), you may use the LATCH anchors to install the child restraint (not both at the same time).
- If the combined weight of the child and child restraint is greater than 65 lbs. (29.5 kg), use the vehicle's seat belt (not the lower anchors) to install the child restraint.
- Be sure to follow the child restraint manufacturer's instructions for installation.

All U.S. states and Canadian provinces or territories require that infants and small children be restrained in an approved child restraint at all times while the vehicle is being operated. Canadian law requires the top tether strap on forward-facing child restraints be secured to the designated anchor point on the vehicle.

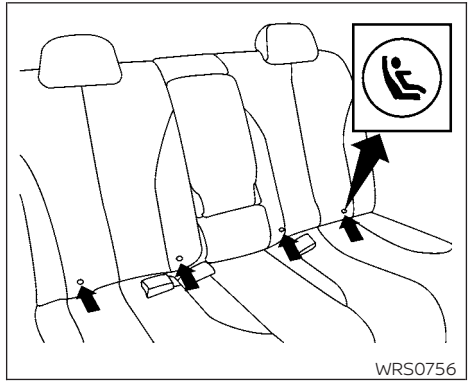

LATCH system lower anchor locations

LATCH (Lower Anchors and Tethers for CHildren) SYSTEM

Your vehicle is equipped with special anchor points that are used with LATCH system compatible child restraints. This system may also be referred to as the ISOFIX or ISOFIX compatible system. With this system, you do not have to use a vehicle seat belt to secure the child restraint unless the combined weight of the child and child restraint exceeds 65 lbs. (29.5 kg). If the combined weight of the child and child restraint is greater than 65 lbs. (29.5 kg), use the vehicle's seat belt (not the lower anchors) to install the child restraint. Be sure to follow the child restraint manufacturer's instructions for installation.

The LATCH anchor points are provided to install child restraints in the rear outboard seating positions only. Do not attempt to install a child restraint in the center position using the LATCH anchors.

LATCH lower anchor

⚠ WARNING

Failure to follow the warnings and instructions for proper use and installation of child restraints could result in serious injury or death of a child or other passengers in a sudden stop or collision:

- **Attach LATCH system compatible child restraints only at the locations shown in the illustration.**
- **Do not secure a child restraint in the center rear seating position using the LATCH lower anchors. The child restraint will not be secured properly.**

- **Inspect the lower anchors by inserting your fingers into the lower anchor area. Feel to make sure there are no obstructions over the anchors such as seat belt webbing or seat cushion material. The child restraint will not be secured properly if the lower anchors are obstructed.**

Child restraint anchorages are designed to withstand only those loads imposed by correctly fitted child restraints. Under no circumstances are they to be used to attach adult seat belts, or other items or equipment to the vehicle. Doing so could damage the child restraint anchorages. The child restraint will not be properly installed using the damaged anchorage, and a child could be seriously injured or killed in a collision.

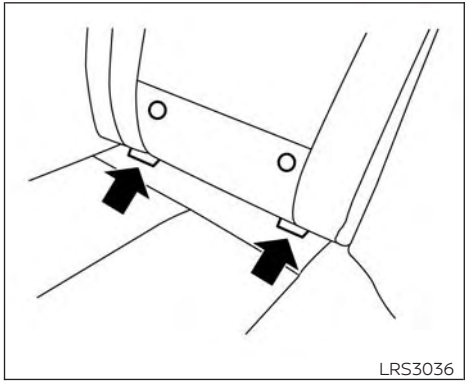

LATCH lower anchor location

LATCH lower anchor location

The LATCH lower anchors are located as shown. A label is attached to the seatback to help you locate the LATCH lower anchors.

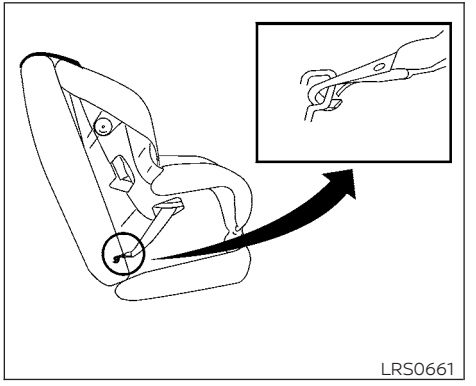

LATCH webbing-mounted attachment

Installing child restraint LATCH lower anchor attachments

LATCH compatible child restraints include two rigid or webbing-mounted attachments that can be connected to two anchors located at certain seating positions in your vehicle. With this system, you do not have to use a vehicle seat belt to secure the child restraint. Check your child restraint for a label stating that it is compatible with LATCH. This information may also be in the instructions provided by the child restraint manufacturer.

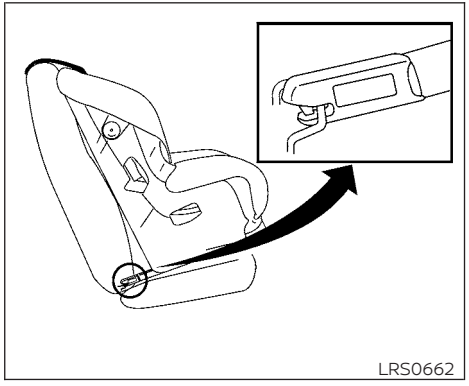

LATCH rigid-mounted attachment

When installing a child restraint, carefully read and follow the instructions in this manual and those supplied with the child restraint.

Top tether anchor

⚠ WARNING

If the cargo cover (if so equipped) contacts the top tether strap when it is attached to the top tether anchor, remove the cargo cover from the vehicle or secure it on the cargo floor below its attachment location. If the cargo cover is not removed, it may damage the top tether strap during a collision. A child could be seriously injured or killed in a collision if the child restraint top tether strap is damaged.

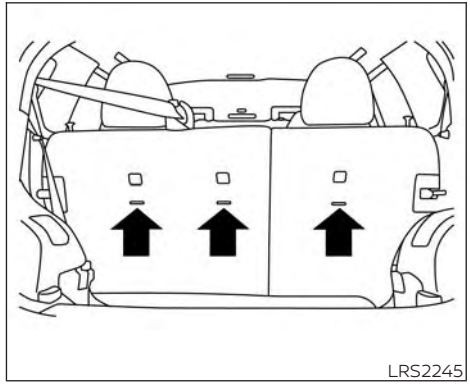

Top tether anchor point locations

Anchor points are located on the back of the rear seats.

⚠ WARNING

Child restraint anchorages are designed to withstand only those loads imposed by correctly fitted child restraints. Under no circumstances are they to be used to attach adult seat belts, or other items or equipment to the vehicle. Doing so could damage the child restraint anchorages. The child restraint will not be properly installed using the damaged anchorage, and a child could be seriously injured or killed in a collision.

REAR-FACING CHILD RESTRAINT INSTALLATION USING LATCH

For additional information, refer to all Warnings and Cautions in the "Child safety" and "Child restraints" sections of this manual before installing a child restraint.

Do not use the lower anchors if the combined weight of the child and the child restraint exceeds 65 lbs. (29.5 kg). If the combined weight of the child and the child restraint is greater than 65 lbs. (29.5 kg), use the vehicle's seat belt (not the lower anchors) to install the child restraint. Be sure to follow the child restraint manufacturer's instructions for installation.

Follow these steps to install a rear-facing child restraint using the LATCH system:

1. Position the child restraint on the seat. Always follow the child restraint manufacturer's instructions.

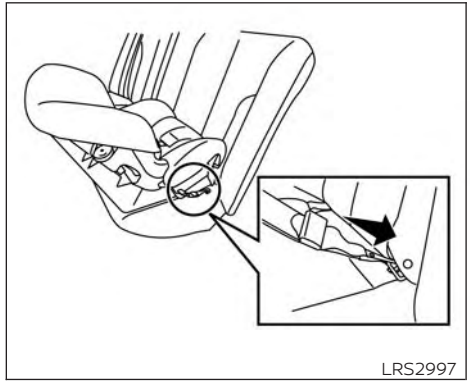

Rear-facing webbing-mounted – step 2

2. Secure the child restraint anchor attachments to the LATCH lower anchors. Check to make sure the LATCH attachment is properly attached to the lower anchors.

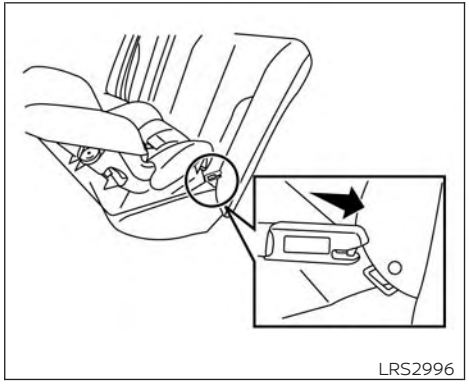

Rear-facing rigid-mounted – step 2

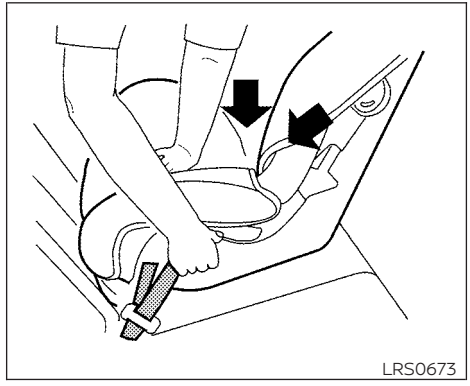

Rear-facing – step 3

3. For child restraints that are equipped with webbing-mounted attachments, remove any additional slack from the anchor attachments. Press downward and rearward firmly in the center of the child restraint with your hand to compress the vehicle seat cushion and seatback while tightening the webbing of the anchor attachments.

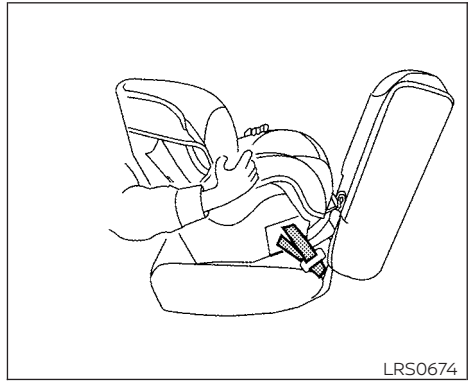

Rear-facing – step 4

4. After attaching the child restraint, test it before you place the child in it. Push it from side to side while holding the child restraint near the LATCH attachment path. The child restraint should not move more than 1 inch (25 mm), from side to side. Try to tug it forward and check to see if the LATCH attachment holds the restraint in place. If the restraint is not secure, tighten the LATCH attachment as necessary, or put the restraint in another seat and test it again. You may need to try a different child restraint or try installing by using

the vehicle seat belt (if applicable). Not all child restraints fit in all types of vehicles.

5. Check to make sure the child restraint is properly secured prior to each use. If the child restraint is loose, repeat steps 1 through 4.

REAR-FACING CHILD RESTRAINT INSTALLATION USING THE SEAT BELTS

⚠ WARNING

- **The three-point seat belt with Automatic Locking Retractor (ALR) must be used when installing a child restraint. Failure to use the ALR mode will result in the child restraint not being properly secured. The restraint could tip over or be loose and cause injury to a child in a sudden stop or collision. Also, it can change the operation of the front passenger air bag. For additional information, refer to "Front passenger air bag and status light" in this section.**
- **When installing a child restraint system in the rear center position, both the center seat belt connector tongue and buckle tongue must be secured. For additional information, refer to "Attaching the center seat belt" in this section.**

For additional information, refer to all Warnings and Cautions in the "Child safety" and "Child restraints" sections of this manual before installing a child restraint.

Do not use the lower anchors if the combined weight of the child and the child restraint exceeds 65 lbs. (29.5 kg). If the combined weight of the child and the child restraint is greater than 65 lbs. (29.5 kg), use the vehicle's seat belt (not the lower anchors) to install the child restraint. Be sure to follow the child restraint manufacturer's instructions for installation.

Follow these steps to install a rear-facing child restraint using the vehicle seat belts in the rear seats:

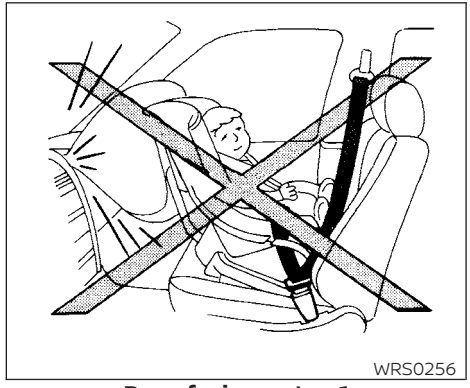

Rear-facing – step 1

1. **Child restraints for infants must be used in the rear-facing direction and therefore must not be used in the front seat.** Position the child restraint on the seat. Always follow the child restraint manufacturer's instructions.

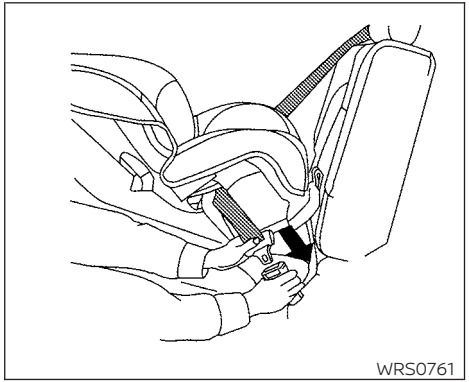

Rear-facing – step 2

2. Route the seat belt tongue through the child restraint and insert it into the buckle until you hear and feel the latch engage. Be sure to follow the child restraint manufacturer's instructions for belt routing.

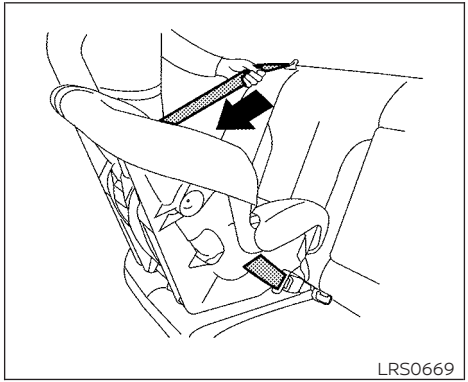

Rear-facing – step 3

3. Pull the shoulder belt until the belt is fully extended. At this time, the seat belt retractor is in the ALR mode (child restraint mode). It reverts to the ELR mode when the seat belt is fully retracted.

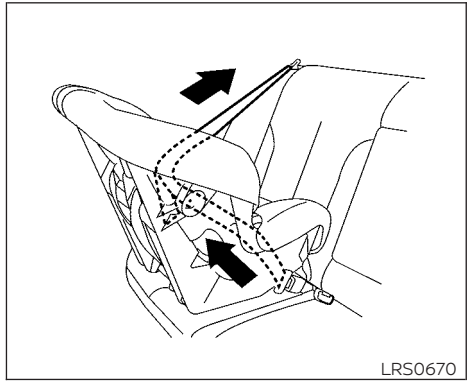

Rear-facing – step 4

4. Allow the seat belt to retract. Pull up on the shoulder belt to remove any slack in the belt.

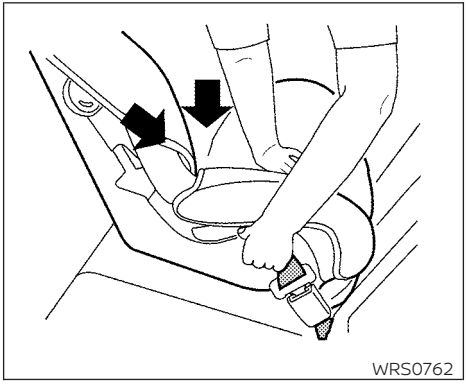

Rear-facing – step 5

5. Remove any additional slack from the seat belt; press downward and rearward firmly in the center of the child restraint to compress the vehicle seat cushion and seatback while pulling up on the seat belt.

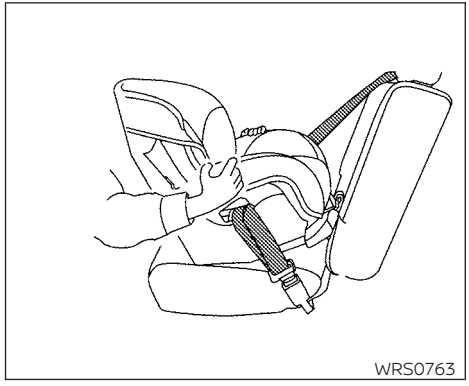

Rear-facing – step 6

6. After attaching the child restraint, test it before you place the child in it. Push it from side to side while holding the child restraint near the seat belt path. The child restraint should not move more than 1 inch (25 mm), from side to side. Try to tug it forward and check to see if the belt holds the restraint in place. If the restraint is not secure, tighten the seat belt as necessary, or put the restraint in another seat and test it again. You may need to try a different child restraint. Not all child restraints fit in all types of vehicles.
7. Check to make sure that the child restraint is properly secured prior to each use. If the seat belt is not locked, repeat steps 1 through 6.

After the child restraint is removed and the seat belt fully retracted, the ALR mode (child restraint mode) is canceled.

FORWARD-FACING CHILD RESTRAINT INSTALLATION USING LATCH

For additional information, refer to all Warnings and Cautions in the "Child safety" and "Child restraints" sections of this manual before installing a child restraint.

Do not use the lower anchors if the combined weight of the child and the child restraint exceeds 65 lbs. (29.5 kg). If the combined weight of the child and the child restraint is greater than 65 lbs. (29.5 kg) use the vehicle's seat belt (not the lower anchors) to install the child restraint. Be sure to follow the child restraint manufacturer's instructions for installation.

Follow these steps to install a forward-facing child restraint using the LATCH system:

1. Position the child restraint on the seat. Always follow the child restraint manufacturer's instructions.

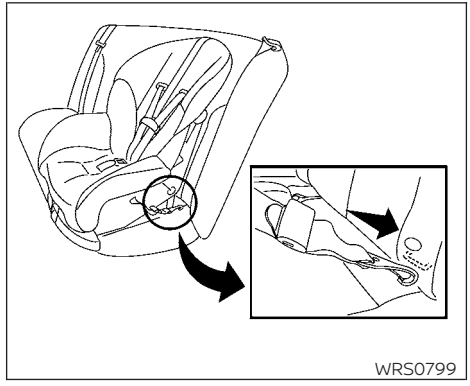

Forward-facing webbing-mounted – step 2

2. Secure the child restraint anchor attachments to the LATCH lower anchors. Check to make sure the LATCH attachment is properly attached to the lower anchors.

   If the child restraint is equipped with a top tether strap, route the top tether strap and secure the tether strap to the tether anchor point. For additional information, refer to "Installing top tether strap" in this section. Do not install child restraints that require the use of a top tether strap in seating positions that do not have a top tether anchor.

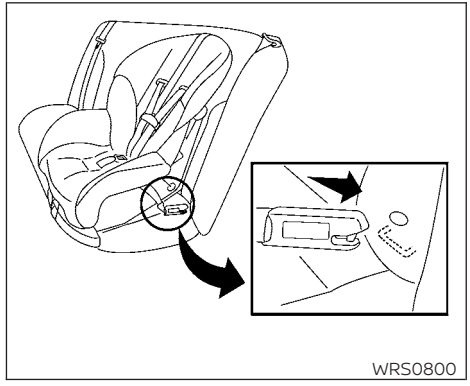

Forward-facing rigid-mounted – step 2

3. The back of the child restraint should be secured against the vehicle seatback.

   If necessary, adjust or remove the head restraint/headrest to obtain the correct child restraint fit. If the head restraint/headrest is removed, store it in a secure place. **Be sure to reinstall the head restraint/headrest when the child restraint is removed.** For additional information, refer to "Head restraints/headrests" in this section for head restraint/headrest adjustment information.

If the seating position does not have an adjustable head restraint/headrest and it is interfering with the proper child restraint fit, try another seating position or a different child restraint.

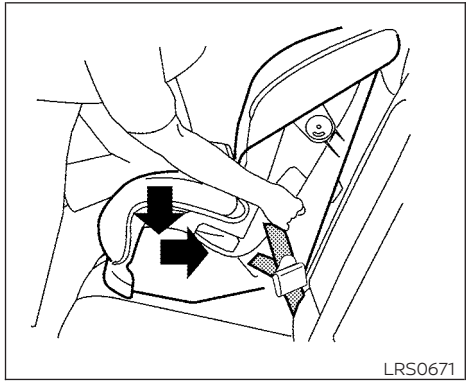

Forward-facing – step 4

4. For child restraints that are equipped with webbing-mounted attachments, remove any additional slack from the anchor attachments. Press downward and rearward firmly in the center of the child restraint with your knee to compress the vehicle seat cushion and seatback while tightening the webbing of the anchor attachments.

5. Tighten the tether strap according to the manufacturer's instructions to remove any slack.

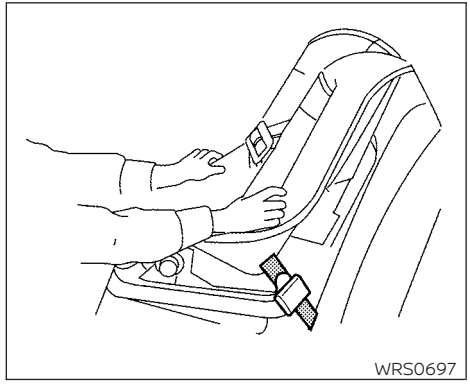

Forward-facing – step 6

6. After attaching the child restraint, test it before you place the child in it. Push it from side to side while holding the child restraint near the LATCH attachment path. The child restraint should not move more than 1 inch (25 mm), from side to side. Try to tug it forward and check to see if the LATCH attachment holds the restraint in place. If the restraint is not secure, tighten the LATCH attachment as necessary, or put the restraint in another seat and test it again. You may need to try a different child restraint. Not all child restraints fit in all types of vehicles.

7. Check to make sure the child restraint is properly secured prior to each use. If the child restraint is loose, repeat steps 1 through 6.

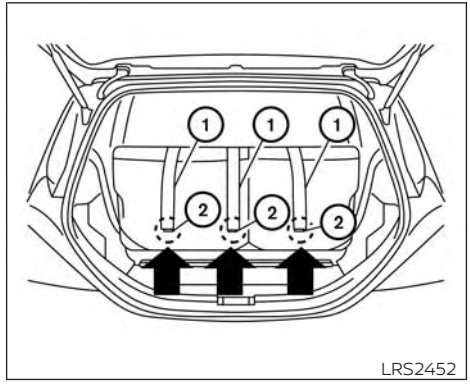

Rear seats

① Top tether strap

② Anchor point

Installing top tether strap

The child restraint top tether strap must be used when installing the child restraint with the LATCH lower anchor attachments.

First, secure the child restraint with the LATCH lower anchors (rear outboard positions only).

Rear bench seat

OUTBOARD SEATING POSITIONS

1. Remove the head restraint/headrest and store it in a secure place. Be sure to reinstall the head restraint/headrest when the child restraint is removed. For additional information, refer to "Head restraints/headrests" in this section.
2. Position the top tether strap as shown.
3. Secure the tether strap to the tether anchor point as shown.
4. Tighten the tether strap according to the manufacturer's instructions to remove any slack.

If you have any questions when installing a top tether strap, it is recommended that you visit a NISSAN dealer for this service.

⚠ WARNING

Child restraint anchorages are designed to withstand only those loads imposed by correctly fitted child restraints. Under no circumstances are they to be used to attach adult seat belts, or other items or equipment to the vehicle. Doing so could damage the child restraint anchorages. The child restraint will not be properly installed using the damaged anchorage, and a child could be seriously injured or killed in a collision.

FORWARD-FACING CHILD RESTRAINT INSTALLATION USING THE SEAT BELTS

⚠ WARNING

- **The three-point seat belt with Automatic Locking Retractor (ALR) must be used when installing a child restraint. Failure to use the ALR mode will result in the child restraint not being properly secured. The restraint could tip over or be loose and cause injury to a child in a sudden stop or collision. Also, it can change the operation of the front passenger air bag. For additional information, refer to "Front passenger air bag and status light" in this section.**
- **When installing a child restraint system in the rear center position, both the center seat belt connector tongue and buckle tongue must be secured. For additional information, refer to "Attaching the center seat belt" in this section.**

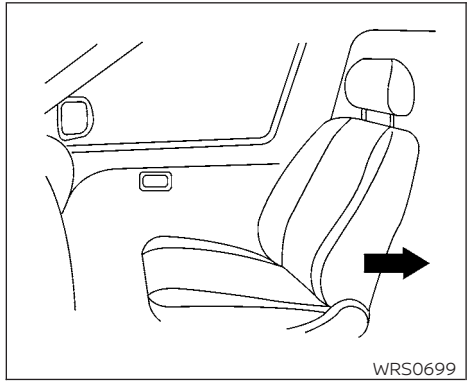

Forward-facing (front passenger seat) – step 1

Refer to all Warnings and Cautions in the "Child safety" and "Child restraints" sections before installing a child restraint.

Do not use the lower anchors if the combined weight of the child and the child restraint exceeds 65 lbs. (29.5 kg). If the combined weight of the child and the child restraint is greater than 65 lbs. (29.5 kg) use the vehicle's seat belt (not the lower anchors) to install the child restraint. Be sure to follow the child restraint manufacturer's instructions for installation.

Follow these steps to install a forward-facing child restraint using the vehicle seat belt in the rear seats or in the front passenger seat:

1. **If you must install a child restraint in the front seat, it should be placed in a forward-facing direction only. Move the seat to the rearmost position. Child restraints for infants must be used in the rear-facing direction and, therefore, must not be used in the front seat.**

2. Position the child restraint on the seat. Always follow the child restraint manufacturer's instructions.

   The back of the child restraint should be secured against the vehicle seatback.

   If necessary, adjust or remove the head restraint/headrest to obtain the correct child restraint fit. If the head restraint/headrest is removed, store it in a secure place. **Be sure to reinstall the head restraint/headrest when the child restraint is removed.** For additional information, refer to "Head restraints/headrests" in this section for head restraint/headrest adjustment, removal and installation information.

If the seating position does not have an adjustable head restraint/headrest and it is interfering with the proper child restraint fit, try another seating position or a different child restraint.

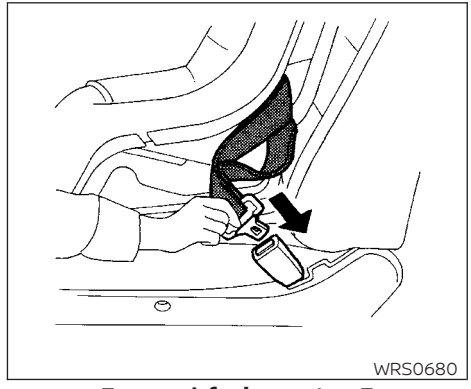

Forward-facing – step 3

3. Route the seat belt tongue through the child restraint and insert it into the buckle until you hear and feel the latch engage. Be sure to follow the child restraint manufacturer's instructions for belt routing.

   If the child restraint is equipped with a top tether strap, route the top tether strap and secure the tether strap to the tether anchor point (rear seat installation only). For additional information, refer to "Installing top tether strap" in this section.

Do not install child restraints that require the use of a top tether strap in seating positions that do not have a top tether anchor.

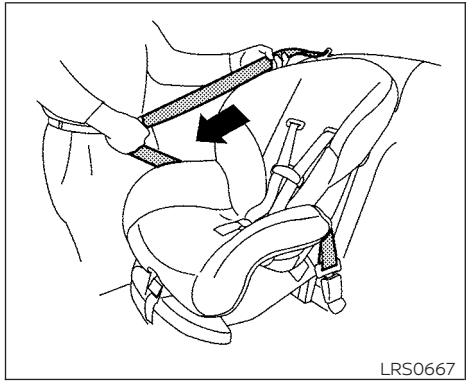

Forward-facing – step 4

4. Pull the shoulder belt until the belt is fully extended. At this time, the seat belt retractor is in the Automatic Locking Retractor (ALR) mode (child restraint mode). It reverts to Emergency Locking Retractor (ELR) mode when the seat belt is fully retracted.

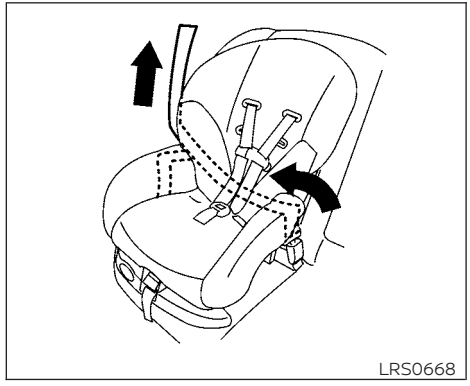

Forward-facing – step 5

5. Allow the seat belt to retract. Pull up on the shoulder belt to remove any slack in the belt.

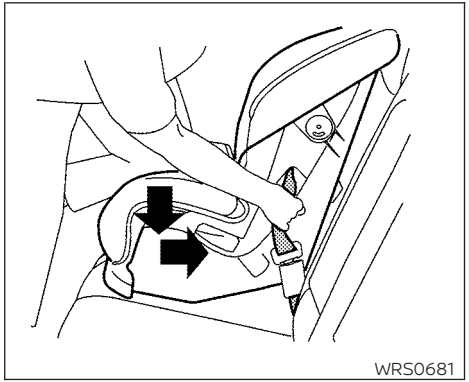

Forward-facing – step 6

6. Remove any additional slack from the seat belt; press downward and rearward firmly in the center of the child restraint with your knee to compress the vehicle seat cushion and seatback while pulling up on the seat belt.

7. Tighten the tether strap according to the manufacturer's instructions to remove any slack.

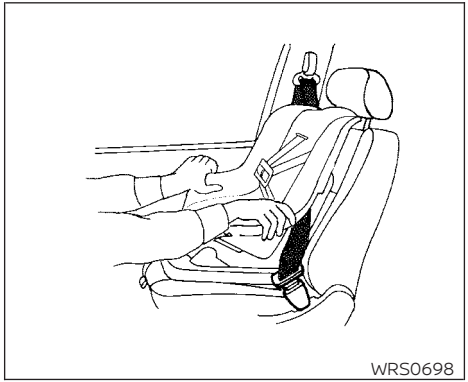

Forward-facing – step 8

8. After attaching the child restraint, test it before you place the child in it. Push it from side to side while holding the child restraint near the seat belt path. The child restraint should not move more than 1 inch (25 mm), from side to side. Try to tug it forward and check to see if the belt holds the restraint in place. If the restraint is not secure, tighten the seat belt as necessary, or put the restraint in another seat and test it again. You may need to try a different child restraint. Not all child restraints fit in all types of vehicles.

9. Check to make sure the child restraint is properly secured prior to each use. If the seat belt is not locked, repeat steps 2 through 8.

Forward-facing – step 10

10. If the child restraint is installed in the front passenger seat, place the ignition switch in the ON position. The front passenger air bag status light should illuminate. If this light is not illuminated, refer to "Front passenger air bag and status light" in this section. **Move the child restraint to another seating position.** Have the system checked. It is recommended that you visit a NISSAN dealer for this service.

After the child restraint is removed and the seat belt is fully retracted, the ALR mode (child restraint mode) is canceled.

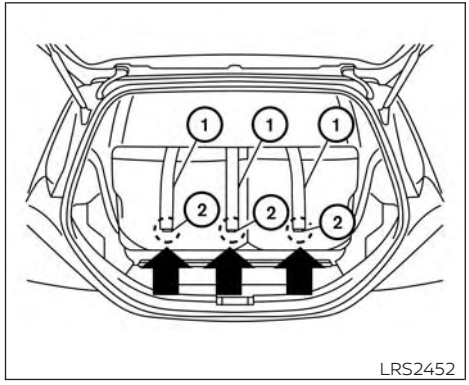

Rear seats

① Top tether strap

② Anchor point

Installing top tether strap

The child restraint top tether strap must be used when installing the child restraint with seat belts.

First, secure the child restraint with the seat belt.

Rear bench seat

OUTBOARD SEATING POSITIONS

1. Remove the head restraint/headrest and store it in a secure place. Be sure to reinstall the head restraint/headrest when the child restraint is removed. For additional information, refer to "Head restraints/headrests" in this section.
2. Position the top tether strap as shown.
3. Secure the tether strap to the tether anchor point as shown.
4. Tighten the tether strap according to the manufacturer's instructions to remove any slack.

CENTER SEATING POSITION

1. Position the top tether strap as shown.
2. Secure the tether strap to the tether anchor point as shown.
3. Tighten the tether strap according to the manufacturer's instructions to remove any slack.

If you have any questions when installing a top tether strap, it is recommended that you visit a NISSAN dealer for this service.

⚠ WARNING

Child restraint anchorages are designed to withstand only those loads imposed by correctly fitted child restraints. Under no circumstances are they to be used to attach adult seat belts, or other items or equipment to the vehicle. Doing so could damage the child restraint anchorages. The child restraint will not be properly installed using the damaged anchorage, and a child could be seriously injured or killed in a collision.

BOOSTER SEATS

For additional information on installing a booster seat in your vehicle, follow the instructions outlined in this section.

Precautions on booster seats

⚠ WARNING

If a booster seat and seat belt are not used properly, the risk of a child being injured or killed in a sudden stop or collision greatly increases:

- **Make sure the shoulder portion of the belt is away from the child's face and neck and the lap portion of the belt does not cross the stomach.**
- **Make sure the shoulder belt is not behind the child or under the child's arm.**
- **A booster seat must only be installed in a seating position that has a lap/shoulder belt.**

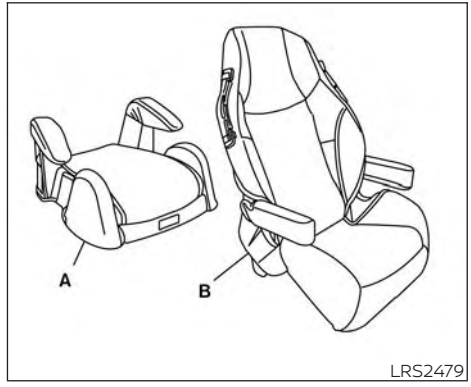

A. Low back booster seat

B. High back booster seat

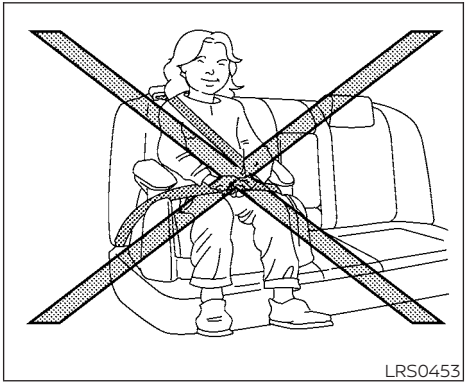
LRS0453

Booster seats of various sizes are offered by several manufacturers. When selecting any booster seat, keep the following points in mind:

- Choose only a booster seat with a label certifying that it complies with Federal Motor Vehicle Safety Standard 213 or Canadian Motor Vehicle Safety Standard 213.
- Check the booster seat in your vehicle to be sure it is compatible with the vehicle's seat and seat belt system.

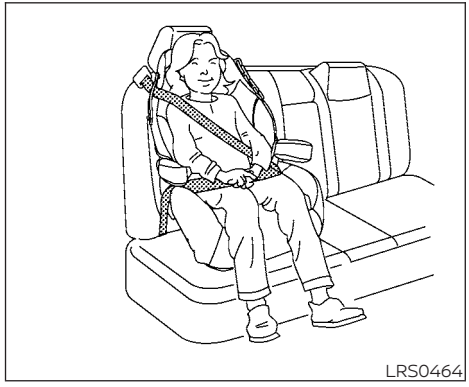
LRS0464

- Make sure the child's head will be properly supported by the booster seat or vehicle seat. The seatback must be at or above the center of the child's ears. For example, if a low back booster seat is chosen, the vehicle seatback must be at or above the center of the child's ears. If the seatback is lower than the center of the child's ears, a high back booster seat should be used.
- If the booster seat is compatible with your vehicle, place the child in the booster seat and check the various adjustments to be sure the booster seat is compatible with the child. Always follow all recommended procedures.

All U.S. states and Canadian provinces or territories require that infants and small children be restrained in an approved child restraint at all times while the vehicle is being operated.

The instructions in this section apply to booster seat installation in the rear seats or the front passenger seat.

Booster seat installation

⚠ WARNING

To avoid injury to child, do not use the lap/shoulder belt in the Automatic Locking Retractor (ALR) mode when using a booster seat with the seat belts.

For additional information, refer to all Warnings and Cautions in the "Child safety", "Child restraints" and "Booster seats" sections of this manual before installing a child restraint.

Follow these steps to install a booster seat in the rear seat or in the front passenger seat:

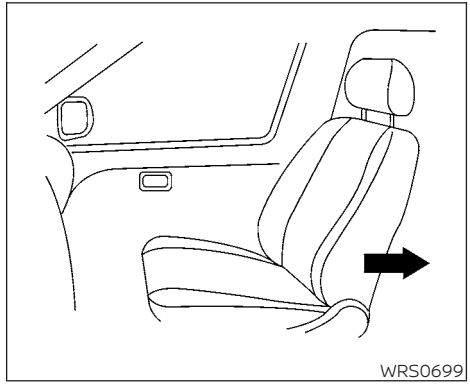

1. **If you must install a booster seat in the front seat, move the seat to the rearmost position.**
2. Position the booster seat on the seat. Only place it in a front-facing direction. Always follow the booster seat manufacturer's instructions.

Front passenger position

3. The booster seat should be positioned on the vehicle seat so that it is stable.

   If necessary, adjust or remove the head restraint/headrest to obtain the correct booster seat fit. If the head restraint/headrest is removed, store it in a secure place. **Be sure to reinstall the head restraint/headrest when the booster seat is removed.** For additional information, refer to "Head restraints/headrests" in this section.

If the seating position does not have an adjustable head restraint/headrest and it is interfering with the proper booster seat fit, try another seating position or a different booster seat.

4. Position the lap portion of the seat belt low and snug on the child's hips. Be sure to follow the booster seat manufacturer's instructions for adjusting the seat belt routing.
5. Pull the shoulder belt portion of the seat belt toward the retractor to take up extra slack. Be sure the shoulder belt is positioned across the top, middle portion of the child's shoulder. Be sure to follow the booster seat manufacturer's instructions for adjusting the seat belt routing.
6. Follow the warnings, cautions and instructions for properly fastening a seat belt shown in "Three-point type seat belt with retractor" in this section.

WRS0475

7. If the booster seat is installed in the front passenger seat, place the ignition switch in the ON position. The front passenger air bag status light may or may not illuminate, depending on the size of the child and the type of booster seat being used. For additional information, refer to "Front passenger air bag and status light" in this section.

PRECAUTIONS ON SRS

This SRS section contains important information concerning the following systems:

- Driver and front passenger supplemental front-impact air bag (NISSAN Advanced Air Bag System)
- Front seat-mounted side-impact supplemental air bag
- Roof-mounted curtain side-impact and rollover supplemental air bag
- Seat belt with pretensioner(s) (front seats)

Supplemental front-impact air bag system

The NISSAN Advanced Air Bag System can help cushion the impact force to the head and chest of the driver and front passenger in certain frontal collisions.

Front seat-mounted side-impact supplemental air bag system

This system can help cushion the impact force to the chest area of the driver and front passenger in certain side-impact collisions. The side air bags are designed to inflate on the side where the vehicle is impacted.

Roof-mounted curtain side-impact and rollover supplemental air bag system

This system can help cushion the impact force to the head of occupants in the outboard seating positions in certain side-impact or rollover collisions. In a side impact, the curtain air bags are designed to inflate on the side where the vehicle is impacted. In a rollover, curtain air bags are designed to inflate and remain inflated for a short time.

These supplemental restraint systems are designed to **supplement** the crash protection provided by the driver and front passenger seat belts and are **not a substitute** for them. Seat belts should always be correctly worn and the occupant seated a suitable distance away from the steering wheel, instrument panel and door finishers. For additional information, refer to "Seat belts" in this section.

The supplemental air bags operate only when the ignition switch is placed in the ON position.

After placing the ignition switch in the ON position, the supplemental air bag warning light illuminates. The supplemental air bag warning light will turn off after about 7 seconds if the system is operational.

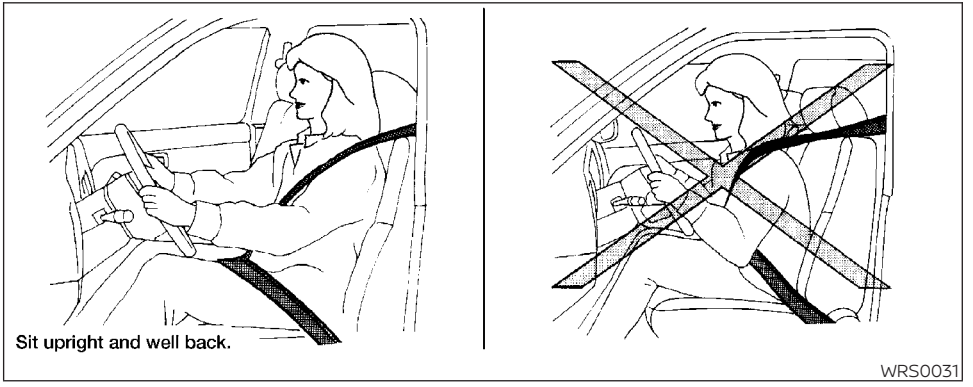

⚠ WARNING

- **The front air bags ordinarily will not inflate in the event of a side impact, rear impact, rollover, or lower severity frontal collision. Always wear your seat belts to help reduce the risk or severity of injury in various kinds of accidents**
- **The front passenger air bag will not inflate if the passenger air bag status light is lit or if the front passenger seat is unoccupied. For additional information, refer to "Front passenger air bag and status light" in this section.**
- **The seat belts and the front air bags are most effective when you are sitting well back and upright in the seat. The front air bags inflate with great force. Even with the NISSAN Advanced Air Bag System, if you are unrestrained, leaning forward, sitting sideways or out of position in any way, you are at greater risk of injury or death in a crash. You may also receive serious or fatal injuries from the front air bag if you are up against it when it inflates. Always sit back against the seatback and as far away as practical from the steering wheel or instrument panel. Always properly use the seat belts.**
- **The driver and front passenger seat belt buckles are equipped with sensors that detect if the seat belts are fastened. The NISSAN Advanced Air Bag System monitors the severity of a collision and seat belt usage, then inflates the air bags as needed. Failure to properly wear seat belts can increase the risk or severity of injury in an accident.**
- **The front passenger seat is equipped with an occupant classification sensor (weight sensor) that turns the front passenger air bag OFF under some conditions. This sensor is only used in this seat. Failure to be properly seated and wearing the seat belt can increase the risk or severity of injury in an accident. For additional information, refer to "Front passenger air bag and status light" in this section.**
- **Keep hands on the outside of the steering wheel. Placing them inside the steering wheel rim could increase the risk that they are injured when the front air bag inflates.**

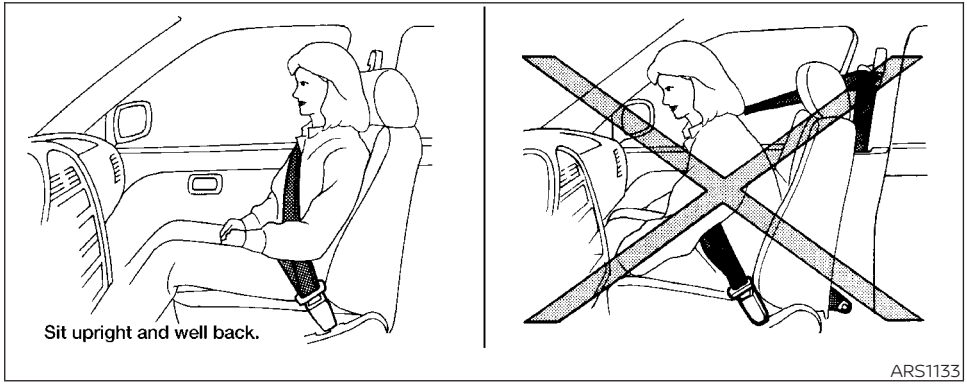

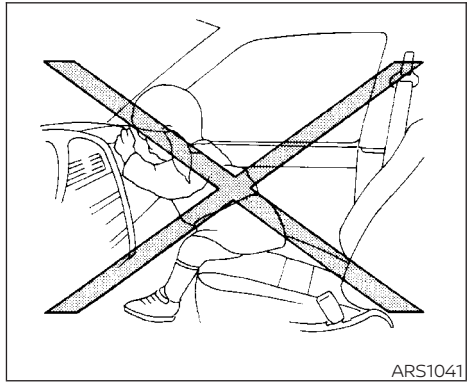

⚠ WARNING

- **Never let children ride unrestrained or extend their hands or face out of the window. Do not attempt to hold them in your lap or arms. Some examples of dangerous riding positions are shown in the illustrations.**

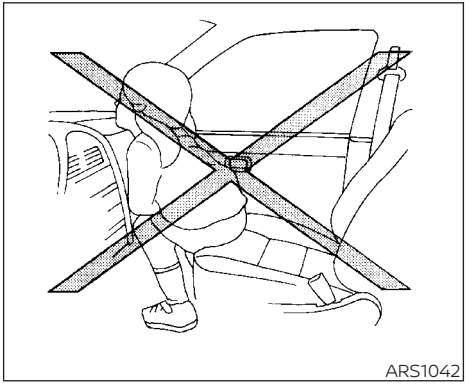
ARS1042

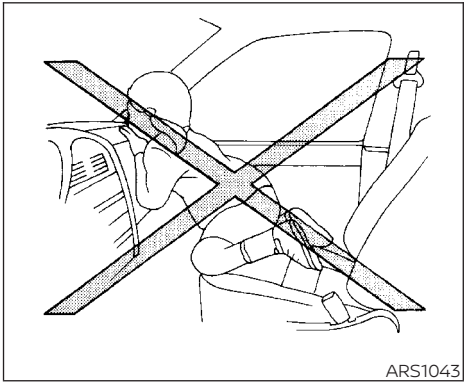
ARS1043

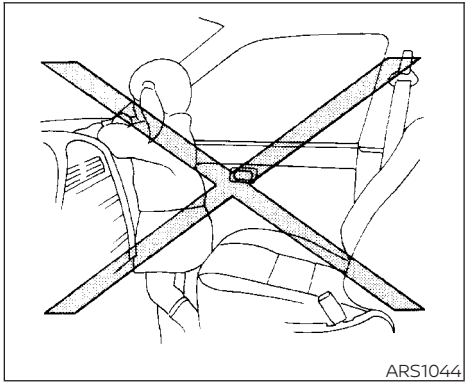
ARS1044

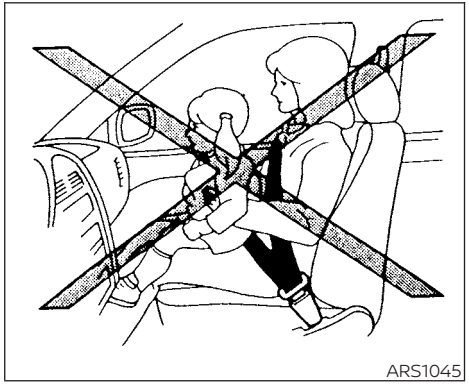

ARS1045

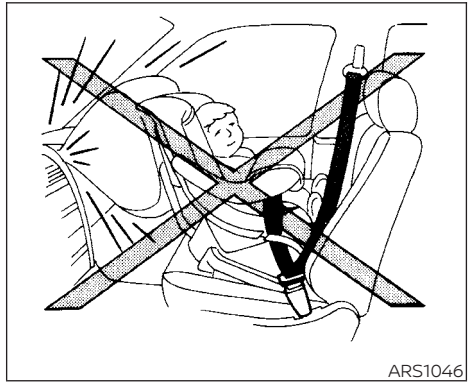

ARS1046

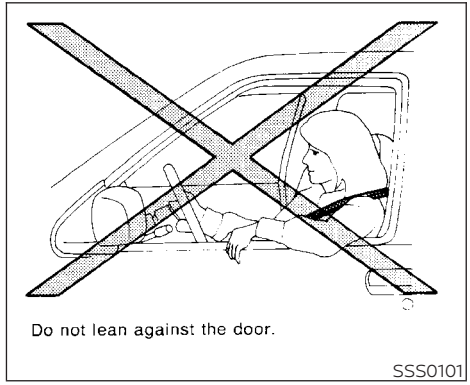

SSS0101

⚠ WARNING

- **Children may be severely injured or killed when the front air bags, side air bags or curtain air bags inflate if they are not properly restrained. Pre-teens and children should be properly restrained in the rear seat, if possible.**
- **Even with the NISSAN Advanced Air Bag System, never install a rear-facing child restraint in the front seat. An inflating front air bag could seriously injure or kill your child. For additional information, refer to "Child restraints" in this section.**

⚠ WARNING

Front seat-mounted side-impact supplemental air bags and roof-mounted curtain side-impact and roll-over supplemental air bags:

- **The side air bags and curtain air bags ordinarily will not inflate in the event of a frontal impact, rear impact, or lower severity side collision. Always wear your seat belts to help reduce the risk or severity of injury in various kinds of accidents.**

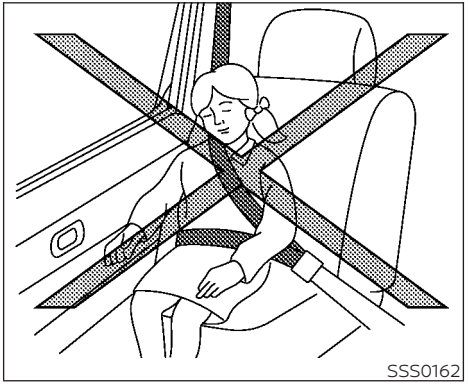
SSS0162

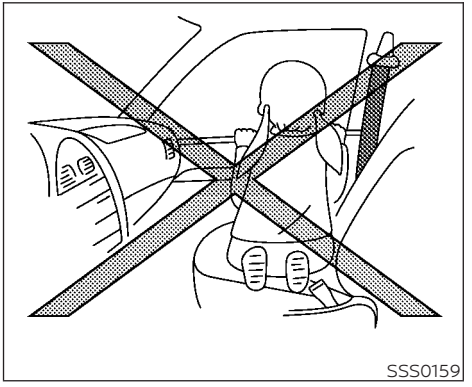
SSS0159

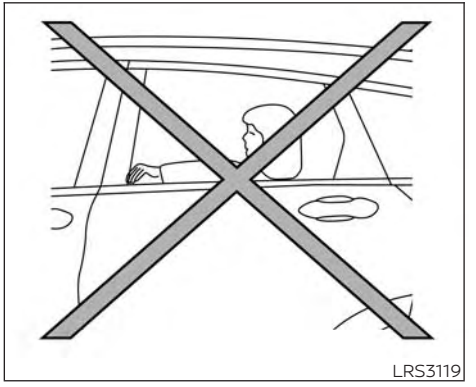
LRS3119

⚠ WARNING

- **The seat belts, the side air bags and curtain air bags are most effective when you are sitting well back and upright in the seat with both feet on the floor. The side air bag and curtain air bag inflate with great force. Do not allow anyone to place their hand, leg or face near the side air bag on the side of the seatback of the front seat or near the side roof rails. Do not allow anyone sitting in the front seats or rear outboard seats to extend their hand out of the window or lean against the door. Some examples of dangerous riding positions are shown in the previous illustrations.**

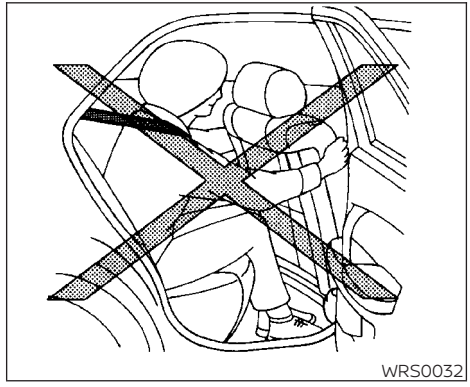

⚠ WARNING

- **When sitting in the rear seat, do not hold onto the seatback of the front seat. If the side air bag inflates, you may be seriously injured. Be especially careful with children, who should always be properly restrained. Some examples of dangerous riding positions are shown in the illustrations.**
- **Do not use seat covers on the front seatbacks. They may interfere with side air bag inflation.**

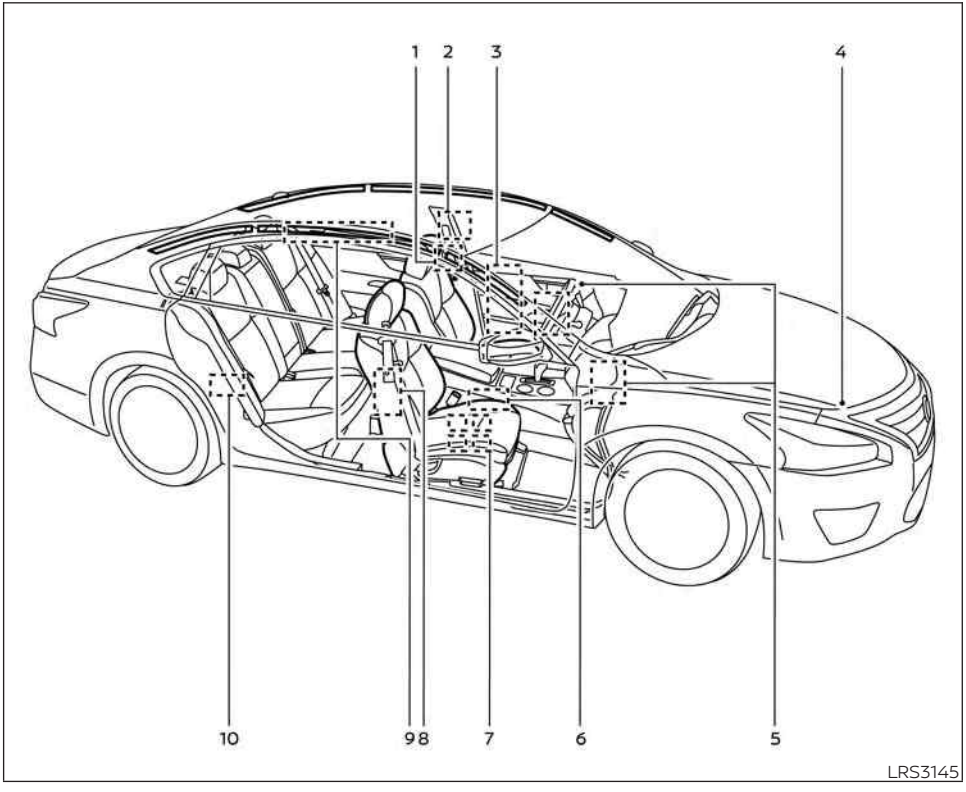

NISSAN Advanced Air Bag System (front seats)

1. Seat belt with pretensioner(s)
2. Shoulder belt height adjustment (front seats)
3. Front door satellite sensor (driver's side shown; front passenger side similar)
4. Crash zone sensor
5. Supplemental front-impact air bag modules
6. Air bag Control Unit (ACU)
7. Occupant classification sensor (weight sensor – located in front passenger cushion frame)
8. Front seat-mounted side-impact supplemental air bag modules
9. Roof-mounted curtain side-impact and rollover supplemental air bag
10. Side satellite sensors

⚠ WARNING

To ensure proper operation of the passenger's NISSAN Advanced Air Bag System, please observe the following items.

- **Do not allow a passenger in the rear seat to push or pull on the seatback pocket.**
- **Do not place heavy loads heavier than 9.1 lbs. (4 kg) on the seatback, head restraint/headrest or in the seatback pocket.**
- **Make sure that there is nothing pressing against the rear of the seatback, such as a child restraint installed in the rear seat or an object stored on the floor.**
- **Make sure that there is no object placed under the front passenger seat.**
- **Make sure that there is no object placed between the seat cushion and center console or between the seat cushion and the door.**
- **If a forward-facing child restraint is installed in the front passenger seat, do not position the front passenger seat so the child restraint contacts the instrument panel. If the child restraint does contact the instrument panel, the system may determine the seat is occupied and the passenger air bag may deploy in a collision. Also the front passenger air bag status light may not illuminate. For additional information, refer to "Child restraints" in this section.**
- **Confirm the operating condition with the front passenger air bag status light.**
- **If you notice that the front passenger air bag status light is not operating as described later in this section, get the occupant classification system checked. It is recommended that you visit a NISSAN dealer for this service.**
- **Until you have confirmed with a dealer that your front passenger seat occupant classification system is working properly, position the occupants in the rear seating positions.**
- **Do not position the front passenger seat so it contacts the rear seat. If the front seat does contact the rear seat, the air bag system may determine a sensor malfunction has occurred and the front passenger air bag status light may illuminate and the supplemental air bag warning light may flash.**

This vehicle is equipped with the NISSAN Advanced Air Bag System for the driver and front passenger seats. This system is designed to meet certification requirements under U.S. regulations. It is also permitted in Canada. **However, all of the information, cautions and warnings in this manual still apply and must be followed.**

The driver supplemental front-impact air bag is located in the center of the steering wheel. The front passenger supplemental front-impact air bag is mounted in the dashboard above the glove box. The front air bags are designed to inflate in higher severity frontal collisions, although they may inflate if the forces in another type of collision are similar to those of a higher severity frontal impact. They may not inflate in certain frontal collisions. Vehicle

damage (or lack of it) is not always an indication of proper front air bag system operation.

The NISSAN Advanced Air Bag System monitors information from the crash zone sensor, the Air bag Control Unit (ACU), seat belt buckle sensors and occupant classification sensor (weight sensor). Inflator operation is based on the severity of a collision and seat belt usage for the driver. For the front passenger, the occupant classification sensors are also monitored. Based on information from the sensors, only one front air bag may inflate in a crash, depending on the crash severity and whether the front occupants are belted or unbelted. Additionally, the front passenger air bag may be automatically turned OFF under some conditions, depending on the weight detected on the front passenger seat and how the seat belt is used. If the front passenger air bag is OFF, the front passenger air bag status light will be illuminated (if the seat is unoccupied, the light will not be illuminated, but the air bag will be off). For additional information, refer to "Front passenger air bag and status light" in this section. One front air bag inflating does not indicate improper performance of the system.

If you have any questions about your air bag system, it is recommended that you visit a NISSAN dealer. If you are considering modification of your vehicle due to a disability, you may also contact NISSAN. Contact information is contained in the front of this Owner's Manual.

When a front air bag inflates, a fairly loud noise may be heard, followed by the release of smoke. This smoke is not harmful and does not indicate a fire. Care should be taken to not inhale it, as it may cause irritation and choking. Those with a history of a breathing condition should get fresh air promptly.

Front air bags, along with the use of seat belts, help to cushion the impact force on the face and chest of the front occupants. They can help save lives and reduce serious injuries. However, an inflating front air bag may cause facial abrasions or other injuries. Front air bags do not provide restraint to the lower body.

Even with NISSAN air bags, seat belts should be correctly worn and the driver and front passenger seated upright as far as practical away from the steering wheel or instrument panel. The front air bags inflate quickly in order to help protect the front occupants. Because of this, the force of the front air bag inflating can increase the risk of injury if the occupant is too close to, or is against, the front air bag module during inflation.

The front air bags deflate quickly after a collision.

The front air bags operate only when the ignition switch is placed in the ON position.

After placing the ignition switch in the ON position, the supplemental air bag warning light illuminates. The supplemental air bag warning light will turn off after about 7 seconds if the system is operational.

Front passenger air bag and status light

⚠ WARNING

The front passenger air bag is designed to automatically turn OFF under some conditions. Read this section carefully to learn how it operates. Proper use of the seat, seat belt and child restraints is necessary for most effective protection. Failure to follow all instructions in this manual concerning the use of seats, seat belts and child restraints can increase the risk or severity of injury in an accident.

Status light

The front passenger seat is equipped with an occupant classification sensor (weight sensor) that turns the front passenger air bag on or off depending on the weight applied to the front passenger seat. The status of the front passenger air bag (ON or OFF) is indicated by the front passenger air bag status light which is located on the instrument panel.

After the ignition switch is placed in the "ON" position, the front passenger air bag status light on the instrument panel illuminates for about 7 seconds and then turns off or remains illuminated depending on the front passenger seat occupied status. The light operates as follows:

- Unoccupied front passenger's seat: The light is OFF and the front passenger air bag is OFF and will not inflate in a crash.
- Front passenger seat occupied by a small adult, child or child restraint as outlined in this section: The light illuminates to indicate that the front passenger air bag is OFF and will not inflate in a crash.
- Occupied front passenger seat and the passenger meets the conditions as outlined in this section: The light is OFF to indicate that the front passenger air bag is operational.

In addition to the above, certain objects placed on the front passenger seat may also cause the light to operate as described above depending on their weight.

For additional information, refer to "Normal operation" and "Troubleshooting" in this section.

Front passenger air bag

The front passenger air bag is designed to automatically turn OFF when the vehicle is operated under some conditions as described below in accordance with U.S. regulations. If the front passenger air bag is OFF, it will not inflate in a crash. The driver air bag and other air bags in your vehicle are not part of this system.

The purpose of the regulation is to help reduce the risk of injury or death from an inflating air bag to certain front passenger seat occupants, such as children, by requiring the air bag to be automatically turned OFF. Certain sensors are used to meet the requirements.

The occupant classification sensor in this vehicle is a weight sensor. It is designed to detect an occupant and objects on the seat by weight. For example, if a child is in the front passenger seat, the NISSAN Advanced Air Bag System is designed to turn the front passenger air bag OFF in accordance with the regulations. Also, if a child restraint of the type specified in the regulations is on the seat, its weight and the child's weight can be detected and cause the air bag to turn OFF.

Front passenger seat adult occupants who are properly seated and using the seat belt as outlined in this manual should not cause the front passenger air bag to be automatically turned OFF. For small adults it may be turned OFF, however if the occupant takes his/her weight off the seat cushion (for example, by not sitting upright, by sitting on an edge of the seat, or by otherwise being out of position), this could cause the sensor to turn the air bag OFF. Always be sure to be seated and wearing the seat belt properly for the most effective protection by the seat belt and supplemental air bag.

NISSAN recommends that pre-teens and children be properly restrained in a rear seat. NISSAN also recommends that appropriate child restraints and booster seats be properly installed in a rear seat. If this is not possible, the occupant classification sensor is designed to operate as described above to turn the front passenger air bag OFF for specified child restraints as required by the regulations. Failing to properly secure child restraints and to use the ALR mode may allow the restraint to tip or move in a collision or sudden stop. This can also result in the passenger air bag inflating in a crash instead of being OFF. For additional information, refer to "Child restraints" in this section.

If the front passenger seat is not occupied, the front passenger air bag is designed not to inflate in a crash. However, heavy objects placed on the seat could result in air bag inflation, because of the object's weight detected by the occupant classification sensor. Other conditions could also result in air bag inflation, such as if a child is standing on the seat, or if two children are on the seat, contrary to the instructions in this manual. Always be sure that you and all vehicle occupants are seated and restrained properly.

Using the front passenger air bag status light, you can monitor when the front passenger air bag is automatically turned OFF with the seat occupied. The light will not illuminate when the front passenger seat is unoccupied.

If an adult occupant is in the seat but the front passenger air bag status light is illuminated (indicating that the air bag is OFF), it could be that the person is a small adult, or is not sitting on the seat properly or not using the seat belt properly.

If a child restraint must be used in the front seat, the front passenger air bag status light may or may not be illuminated, depending on the size of the child and the type of child restraint being used. If the air bag status light is not illuminated (indicating that the air bag might inflate in a crash), it could be that the child restraint or seat belt is not being used properly. Make sure that the child restraint is installed properly, the seat belt is used properly and the occupant is positioned properly. If the air bag status light is still not illuminated, reposition the occupant or child restraint in a rear seat.

If the front passenger air bag status light will not illuminate even though you believe that the child restraint, the seat belts and the occupant are properly positioned, the system may be sensing an unoccupied seat (in which case the air bag is OFF). A

NISSAN dealer can check that the system is OFF by using a special tool. However, until you have confirmed with a dealer that your air bag is working properly, reposition the occupant or child restraint in a rear seat.

The NISSAN Advanced Air Bag System and front passenger air bag status light will take a few seconds to register a change in the front passenger seat status. This is normal system operation and does not indicate a malfunction.

If a malfunction occurs in the front passenger air bag system, the supplemental air bag warning light , located in the meter and gauges area of the instrument panel, will blink. Have the system checked. It is recommended that you visit a NISSAN dealer for this service.

Normal operation

In order for the occupant classification sensor system to classify the front passenger based on weight, please follow the precautions and steps outlined below:

Precautions

- Make sure that there are no objects weighing over 9.1 lbs. (4 kg) hanging on the seat or placed in the seatback pocket.
- Make sure that a child restraint or other object is not pressing against the rear of the seatback.
- Make sure that a rear passenger is not pushing or pulling on the back of the front passenger seat.
- Make sure that the front passenger seat or seatback is not forced back against an object on the seat or floor behind it.
- Make sure that there is no object placed under the front passenger seat.

Steps

1. Adjust the seat as outlined in the "Seats" section of this manual. Sit upright, leaning against the seatback, and centered on the seat cushion with your feet comfortably extended to the floor.
2. Make sure there are no objects on your lap.
3. Fasten the seat belt as outlined in the "Seat belts" section of this manual.
4. Remain in this position for 30 seconds allowing the system to classify the front passenger before the vehicle is put into motion.
5. Ensure proper classification by checking the front passenger air bag status light.

NOTE:

This vehicle's occupant classification sensor system locks the classification during driving so it is important that you confirm that the front passenger is properly classified prior to driving. Also, the occupant classification sensor system may recalculate the weight of the occupant when the vehicle comes to a stop (i.e. stop light, stop sign, etc.), so front passenger seat occupants should continue to remain seated as outlined above.

Troubleshooting

If you think the front passenger air bag status light is incorrect:

1. If the light is ON with no front passenger and no objects on the front passenger seat:

This may be due to the following conditions that may be interfering with the weight sensors:

- An object weighing over 9.1 lbs. (4 kg) hanging on the seat or placed in the seatback pocket.

- A child restraint or other object pressing against the rear of the seatback.
- A rear passenger pushing or pulling on the back of the front passenger seat.
- Forcing the front seat or seatback against an object on the seat or floor behind it.
- An object placed under the front passenger seat.
- An object placed between the seat cushion and center console or between the seat cushion and the door.

If the vehicle is moving, please come to a stop when it is safe to do so. Check and correct any of the above conditions. Restart the vehicle and wait 1 minute.

NOTE:

A system check will be performed during which the front passenger air bag status light will remain lit for about 7 seconds initially.

If the light is still ON after this, the vehicle should be checked as soon as possible. It is recommended that you visit a NISSAN dealer for this service.

2. If the light is ON with an adult occupying the front passenger seat:

- Occupant is a small adult — the air bag light is functioning as intended. The front passenger air bag is suppressed.

However, if the occupant is not a small adult, then this may be due to the following conditions that may be interfering with the weight sensors:

- Occupant is not sitting upright, leaning against the seatback, and centered on the seat cushion with his/her feet comfortably extended to the floor.
- A child restraint or other object pressing against the rear of the seatback.
- A rear passenger pushing or pulling on the back of the front passenger seat.
- Forcing the front seat or seatback against an object on the seat or floor behind it.
- An object placed under the front passenger seat.
- An object placed between the seat cushion and center console or between the seat cushion and the door.

If the vehicle is moving, please come to a stop when it is safe to do so. Check and correct any of the above conditions. Restart the vehicle and wait 1 minute.

NOTE:

A system check will be performed during which the front passenger air bag status light will remain lit for about 7 seconds initially.

If the light is still ON after this, the person should be advised not to ride in the front passenger seat and the vehicle should be checked as soon as possible. It is recommended that you visit a NISSAN dealer for this service.

3. If the light is OFF with a small adult, child or child restraint occupying the front passenger seat.

   This may be due to the following conditions that may be interfering with the weight sensors:

- Small adult or child is not sitting upright, leaning against the seatback, and centered on the seat cushion with his/her feet comfortably extended to the floor.

- The child restraint is not properly installed, as outlined in the "Child restraints" section of this manual.
- An object weighing over 9.1 lbs. (4 kg) hanging on the seat or placed in the seatback pocket.
- A child restraint or other object pressing against the rear of the seatback.
- A rear passenger pushing or pulling on the back of the front passenger seat.
- Forcing the front seat or seatback against an object on the seat or floor behind it.
- An object placed under the front passenger seat.
- An object placed between the seat cushion and center console.

If the vehicle is moving, please come to a stop when it is safe to do so. Check and correct any of the above conditions. Restart the vehicle and wait 1 minute.

NOTE:

A system check will be performed during which the front passenger air bag status light will remain lit for about 7 seconds initially.

If the light is still OFF after this, the small adult, child or child restraint should be repositioned in the rear seat and the vehicle should be checked as soon as possible. It is recommended that you visit a NISSAN dealer for this service.

Other supplemental front-impact air bag precautions

⚠ WARNING

- **Do not place any objects on the steering wheel pad or on the instrument panel. Also, do not place any objects between any occupant and the steering wheel or instrument panel. Such objects may become dangerous projectiles and cause injury if the front air bags inflate.**
- **Immediately after inflation, several front air bag system components will be hot. Do not touch them; you may severely burn yourself.**
- **No unauthorized changes should be made to any components or wiring of the supplemental air bag system. This is to prevent accidental inflation of the supplemental air bag or damage to the supplemental air bag system.**
- **Do not make unauthorized changes to your vehicle's electrical system, suspension system or front end structure. This could affect proper operation of the front air bag system.**
- **Tampering with the front air bag system may result in serious personal injury. Tampering includes changes to the steering wheel and the instrument panel assembly by placing material over the steering wheel pad and above the instrument panel or by installing additional trim material around the air bag system.**
- **Removing or modifying the front passenger seat may affect the function of the air bag system and result in serious personal injury.**

- **Modifying or tampering with the front passenger seat may result in serious personal injury. For example, do not change the front seats by placing material on the seat cushion or by installing additional trim material, such as seat covers, on the seat that are not specifically designed to assure proper air bag operation. Additionally, do not stow any objects under the front passenger seat or the seat cushion and seatback. Such objects may interfere with the proper operation of the occupant classification sensor (weight sensor).**
- **No unauthorized changes should be made to any components or wiring of the seat belt system. This may affect the front air bag system. Tampering with the seat belt system may result in serious personal injury.**
- **It is recommended that you visit a NISSAN dealer for work on and around the front air bag. It is also recommended that you visit a NISSAN dealer for installation of electrical equipment. The Supplemental Restraint System (SRS) wiring harnesses* should not be modified or disconnected. Unauthorized electrical test equipment and probing devices should not be used on the air bag system.**
- **A cracked windshield should be replaced immediately by a qualified repair facility. A cracked windshield could affect the function of the supplemental air bag system.**

***The SRS wiring harness connectors are yellow and orange for easy identification.**

When selling your vehicle, we request that you inform the buyer about the front air bag system and guide the buyer to the appropriate sections in this Owner's Manual.

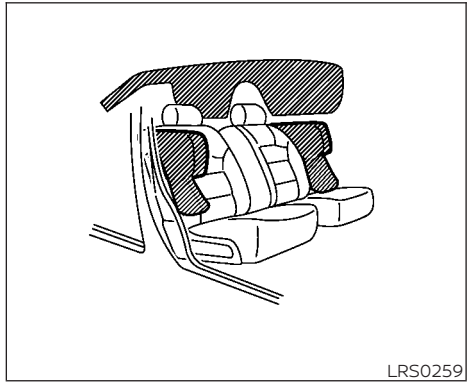

Front seat-mounted side-impact supplemental air bag and roof-mounted curtain side-impact and rollover supplemental air bag systems

The side air bags are located in the outside of the seatback of the front seats. The curtain air bags are located in the side roof rails. **All of the information, cautions, and warnings in this manual apply and must be followed.** The side air bags and curtain air bags are designed to inflate in higher severity side collisions, although they may inflate if the forces in another type of colli-

sion are similar to those of a higher severity side impact. They are designed to inflate on the side where the vehicle is impacted. They may not inflate in certain side collisions.

Curtain air bags are also designed to inflate in certain types of rollover collisions or near rollovers. As a result, certain vehicle movements (for example, during severe off-roading) may cause the curtain air bags to inflate.

Vehicle damage (or lack of it) is not always an indication of proper side air bag and curtain air bag operation.

When the side air bags and curtain air bags inflate, a fairly loud noise may be heard, followed by release of smoke. This smoke is not harmful and does not indicate a fire. Care should be taken not to inhale it, as it may cause irritation and choking. Those with a history of a breathing condition should get fresh air promptly.

Side air bags, along with the use of seat belts, help to cushion the impact force on the chest of the front occupants. Curtain air bags help to cushion the impact force to the head of occupants in the front and rear outboard seating positions. They can help save lives and reduce serious injuries. However, an inflating side air bag or curtain air bag may cause abrasions or other injuries. Side air bags and curtain air bags do not provide restraint to the lower body.

The seat belts should be correctly worn and the driver and passenger seated upright as far as practical away from the side air bag. Rear seat passengers should be seated as far away as practical from the door finishers and side roof rails. The side air bags and curtain air bags inflate quickly in order to help protect the occupants. Because of this, the force of the side air bags and curtain air bags inflating can increase the risk of injury if the occupant is too close to, or is against, these air bag modules during inflation. The side air bag will deflate quickly after the collision is over.

The curtain air bags will remain inflated for a short time.

The side air bags and curtain air bags operate only when the ignition switch is in the ON or START position.

After placing the ignition switch in the ON position, the supplemental air bag warning light illuminates. The supplemental air bag warning light will turn off after about 7 seconds if the system is operational.

⚠ WARNING

- **Do not place any objects near the seatback of the front seats. Also, do not place any objects (an umbrella, bag, etc.) between the front door finisher and the front seat. Such objects may become dangerous projectiles and cause injury if a side air bag inflates.**
- **Right after inflation, several side air bag and curtain air bag system components will be hot. Do not touch them; you may severely burn yourself.**
- **No unauthorized changes should be made to any components or wiring of the side air bag and curtain air bag systems. This is to prevent damage to or accidental inflation of the side air bag and curtain air bag systems.**
- **Do not make unauthorized changes to your vehicle's electrical system, suspension system or side panel. This could affect proper operation of the curtain air bag systems.**

- **Tampering with the side air bag system may result in serious personal injury. For example, do not change the front seats by placing material near the seatbacks or by installing additional trim material, such as seat covers, around the side air bag.**
- **It is recommended that you visit a NISSAN dealer for work around and on the side air bag and curtain air bag system. It is also recommended that you visit a NISSAN dealer for installation of electrical equipment. The SRS wiring harnesses* should not be modified or disconnected. Unauthorized electrical test equipment and probing devices should not be used on the side air bag or curtain air bag systems.**

*** The SRS wiring harness or connectors are yellow or orange for easy identification.**

When selling your vehicle, we request that you inform the buyer about the side air bag and curtain air bag systems and guide the buyer to the appropriate sections in this Owner's Manual.

Seat belt with pretensioner(s) (front seats)

⚠ WARNING

- **The pretensioner(s) cannot be reused after activation. They must be replaced together with the retractor and buckle as a unit.**
- **If the vehicle becomes involved in a collision but pretensioner(s) are not activated, be sure to have the pretensioner system checked and, if necessary, replaced. It is recommended that you visit a NISSAN dealer for this service.**
- **No unauthorized changes should be made to any components or wiring of the pretensioner system. This is to prevent damage to or accidental activation of the pretensioner(s). Tampering with the pretensioner system may result in serious personal injury.**
- **It is recommended that you visit a NISSAN dealer for work around and on the pretensioner system. It is also recommended that you visit a NISSAN dealer for installation of electrical equipment. Unauthorized electrical test equipment and probing devices should not be used on the pretensioner system.**
- **If you need to dispose of the pretensioner(s) or scrap the vehicle, it is recommended that you visit a NISSAN dealer for this service. Incorrect disposal procedures could cause personal injury.**

The pretensioner system may activate with the supplemental air bag system in certain types of collisions. Working with the seat belt retractor, the pretensioner(s) help tighten the seat belt when the vehicle becomes involved in certain types of collisions, helping to restrain front seat occupants.

The pretensioner(s) are encased with the seat belt retractor. These seat belts are used the same way as conventional seat belts.

When pretensioner(s) activate, smoke is released and a loud noise may be heard. This

smoke is not harmful and does not indicate a fire. Care should be taken not to inhale it, as it may cause irritation and choking. Those with a history of a breathing condition should get fresh air promptly.

After the pretensioner(s') activation, load limiters allow the seat belt to release webbing (if necessary) to reduce forces against the chest.

The supplemental air bag warning light is used to indicate malfunctions in the pretensioner(s) system. For additional information, refer to "Supplemental air bag warning light" in this section. If the operation of the supplemental air bag warning light indicates there is a malfunction, have the system checked. It is recommended that you visit a NISSAN dealer for this service.

When selling your vehicle, we request that you inform the buyer about the pretensioner system and guide the buyer to the appropriate sections in this Owner's Manual.

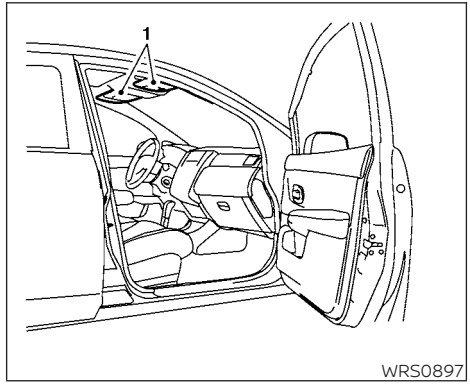

1. SRS Air Bag Warning Labels (located on the sun visors)

SUPPLEMENTAL AIR BAG WARNING LABELS

Warning labels about the supplemental front-impact air bag system are placed in the vehicle as shown in the illustration.

⚠ WARNING

Do not use a rear-facing child restraint on a seat protected by an air bag in front of it. If the air bag deploys, it may cause serious injury or death.

SUPPLEMENTAL AIR BAG WARNING LIGHT

The supplemental air bag warning light, displaying in the instrument panel, monitors the circuits for the air bag systems, pretensioner(s) and all related wiring. When the ignition switch is placed in the ON position, the supplemental air bag warning light illuminates for about 7 seconds and then turns off. This means the system is operational.

If any of the following conditions occur, the front air bag, side air bag, curtain air bag and pretensioner systems need servicing:

- The supplemental air bag warning light remains on after approximately 7 seconds.
- The supplemental air bag warning light flashes intermittently.
- The supplemental air bag warning light does not come on at all.

Under these conditions, the front air bag, side air bag, curtain air bag or pretensioner systems may not operate properly. They must be checked and repaired. It is recommended that you visit a NISSAN dealer for this service.

⚠ WARNING

If the supplemental air bag warning light is on, it could mean that the front air bag, side air bag, curtain air bag and/or pretensioner systems will not operate in an accident. To help avoid injury to yourself or others, have your vehicle checked as soon as possible. It is recommended that you visit a NISSAN dealer for this service.

Repair and replacement procedure

The front air bags, side air bags, curtain air bags and pretensioner(s) are designed to inflate on a one-time-only basis. As a reminder, unless it is damaged, the supplemental air bag warning light remains illuminated after inflation has occurred. These systems should be repaired and/or replaced as soon as possible. It is recommended that you visit a NISSAN dealer for this service.

When maintenance work is required on the vehicle, the front air bags, side air bags, curtain air bags, pretensioner(s) and related parts should be pointed out to the person performing the maintenance. The ignition switch should always be placed in the LOCK position when working under the hood or inside the vehicle.

⚠ WARNING

- **Once a front air bag, side air bag or curtain air bag has inflated, the air bag module will not function again and must be replaced. Additionally, the activated pretensioner(s) must also be replaced. The air bag module and pretensioner(s) should be replaced. It is recommended that you visit a NISSAN dealer for this service. However, the air bag module and pretensioner(s) cannot be repaired.**
- **The front air bag, side air bag, curtain air bag systems and the pretensioner system should be inspected if there is any damage to the front end or side portion of the vehicle. It is recommended that you visit a NISSAN dealer for this service.**
- **If you need to dispose of the supplemental air bag or pretensioner systems or scrap the vehicle, it is recommended that you visit a NISSAN dealer. Incorrect disposal procedures could cause personal injury.**

- **If there is an impact to your vehicle from any direction, your Occupant Classification Sensor (OCS) should be checked to verify it is still functioning correctly. It is recommended that you visit a NISSAN dealer for this service. The OCS should be checked even if no air bags deploy as a result of the impact. Failure to verify proper OCS function may result in an improper air bag deployment resulting in injury or death.**

MEMO

2 Instruments and controls

Instrument panel 2-2
Meters and gauges 2-3
Speedometer and odometer 2-5
Tachometer 2-8
Engine coolant temperature gauge 2-9
Fuel gauge 2-10
Trip computer 2-11
Service interval reminder (if so equipped) 2-13
Warning lights, indicator lights and audible reminders 2-14
Checking lights 2-15
Warning lights 2-15
Indicator lights 2-20
Audible reminders 2-23
Security system (if so equipped) 2-24
NISSAN Vehicle Immobilizer System 2-24
Wiper and washer switch 2-26
Switch operation 2-26
Rear switch operation 2-27
Rear window and outside mirror (if so equipped) defroster switch 2-28
Headlight and turn signal switch 2-28
Headlight control switch 2-28
Daytime Running Lights (DRL) system (Canada only) 2-29
Instrument brightness control 2-30
Turn signal switch 2-31
Fog light switch (if so equipped) 2-31
Horn 2-32
Heated seat switches (if so equipped) 2-32
Vehicle Dynamic Control (VDC) OFF switch 2-33
Power outlets 2-34
Storage 2-35
Front-door pockets 2-35
Seatback pocket 2-35
Storage tray 2-36
Glove box 2-36
Upper glove box 2-37
Cup holders 2-37
Divide-n-hide® adjustable floor (if so equipped) 2-39
Cargo cover (if so equipped) 2-40
Windows 2-41
Power windows (if so equipped) 2-41
Manual windows (if so equipped) 2-43
Interior lights 2-43
Map light 2-44
Luggage compartment light 2-45

INSTRUMENT PANEL

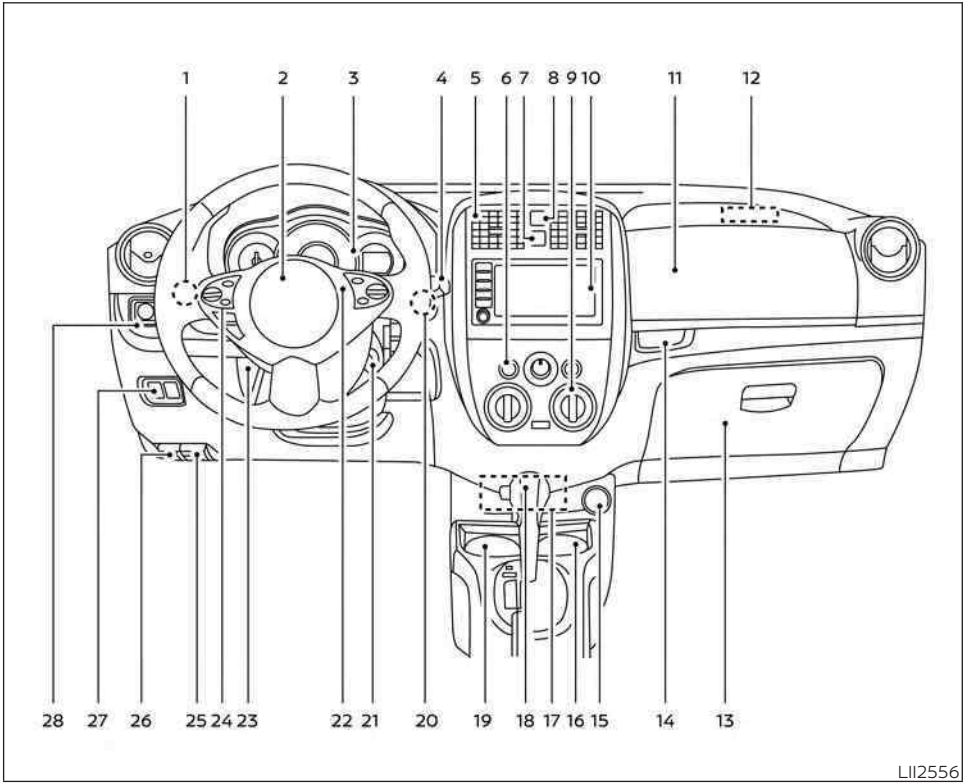

1. Headlight/fog light (if so equipped)/turn signal switch (P. 2-28)
2. Driver's supplemental air bag (P. 1-44)
   Horn (P. 2-32)
3. Meters and gauges (P. 2-3)
   Trip computer control switches (if so equipped) (P. 2-3)
4. Wiper and washer switch (P. 2-26)
5. Vents (P. 4-14)
6. Rear window and outside mirror (if so equipped) defroster switch (P. 2-28)
7. Hazard warning flasher switch (P. 6-2)
8. Front passenger air bag status light (P. 1-44)
9. Climate control (P. 4-15)
10. Audio system (P. 4-23)
11. Upper glove box (P. 2-35)
12. Passenger's supplemental air bag (P. 1-44)
13. Lower glove box (P. 2-35)
14. Upper glove box release handle (P. 2-35)
15. Power outlet (P. 2-34)
16. Cup holders (P. 2-35)

17. USB connection port (if so equipped) (P. 4-23)
    AUX IN jack (if so equipped) (P. 4-23)
18. Shift lever (P. 5-17)
19. Cup holders (P. 2-35)
20. Push-button ignition switch (if so equipped) (P. 5-11)
21. Ignition switch (if so equipped) (P. 5-9)
22. Cruise control switches (if so equipped) (P. 5-24)
23. Tilt steering (P. 3-31)
24. Bluetooth® Hands-Free Phone System (P. 4-2, 4-46)
    Audio control switches (P. 4-23)
    Trip computer control switches (if so equipped) (P. 2-3)
25. Hood release lever (P. 3-26)
26. Fuel-filler door release lever (P. 3-28)
27. Vehicle Dynamic Control (VDC) OFF switch (P. 2-33)
28. Outside mirror control switch (P. 3-33)

Refer to the page number indicated in parentheses for operating details.

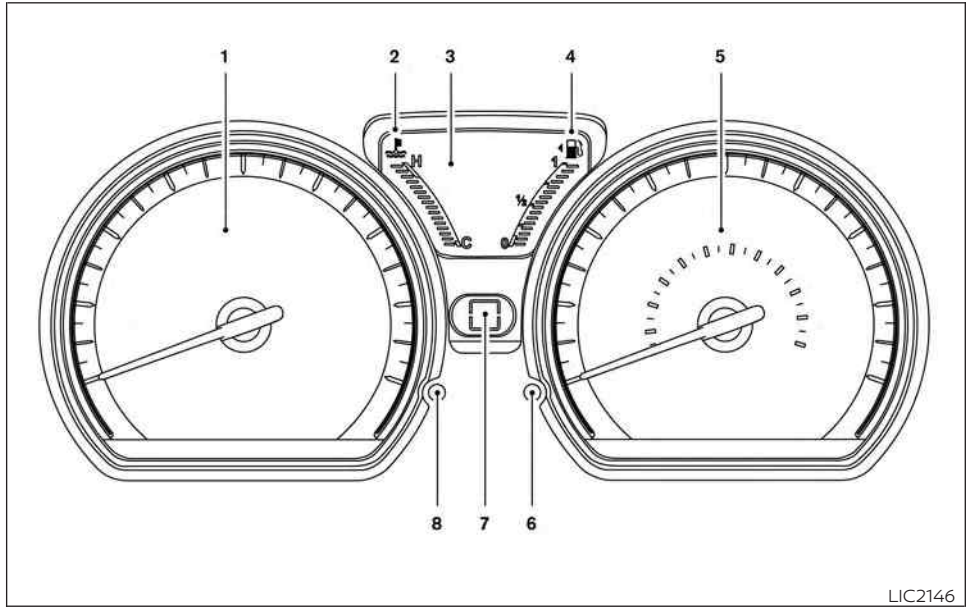

Type A (if so equipped)

1. Tachometer
2. Temperature gauge
3. Odometer
   Twin trip odometer
   Trip computer
4. Fuel gauge
5. Speedometer
6. Trip odometer reset switch
   Trip computer mode

7. Continuously Variable Transmission (CVT) position indicator (CVT models only)
8. Instrument brightness control

⚠ CAUTION

- **To clean the meter lens, use a soft cloth, dampened with water. Never use a rough cloth, alcohol, benzine, thinner or any kind of solvent or paper towel with a chemical cleaning agent. They will scratch or cause discoloration to the lens.**
- **Do not spray any liquid such as water on the meter lens. Spraying liquid may cause the system to malfunction.**

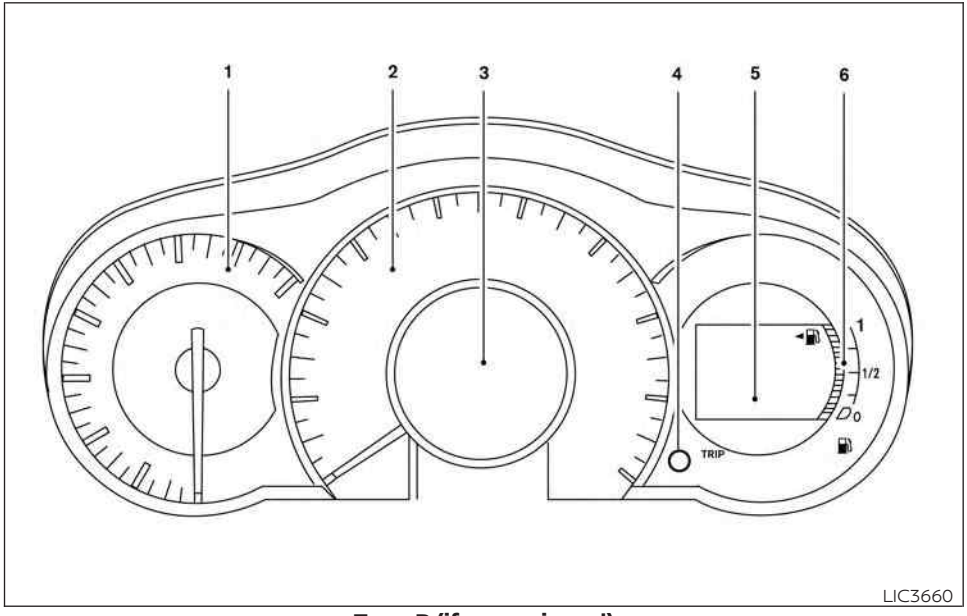

Type B (if so equipped)

1. Tachometer
2. Speedometer
3. Trip computer
   Outside Air Temperature (if so equipped)
4. Trip odometer reset switch
   Instrument brightness control

5. Continuously Variable Transmission (CVT) position indicator (CVT models only)
   Odometer
   Twin trip odometer
6. Fuel gauge

⚠ CAUTION

- **To clean the meter lens, use a soft cloth, dampened with water. Never use a rough cloth, alcohol, benzine, thinner or any kind of solvent or paper towel with a chemical cleaning agent. They will scratch or cause discoloration to the lens.**
- **Do not spray any liquid such as water on the meter lens. Spraying liquid may cause the system to malfunction.**

SPEEDOMETER AND ODOMETER

This vehicle is equipped with a speedometer and odometer. The speedometer is located on the right side of the meter cluster. The odometer is located within the trip computer.

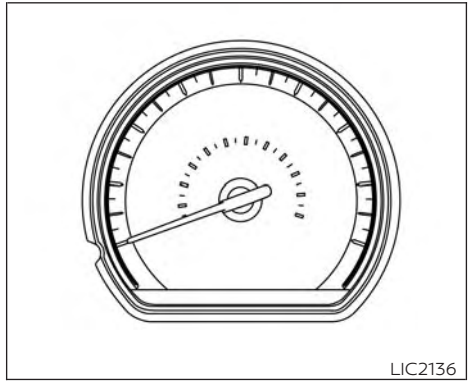

Type A (if so equipped)

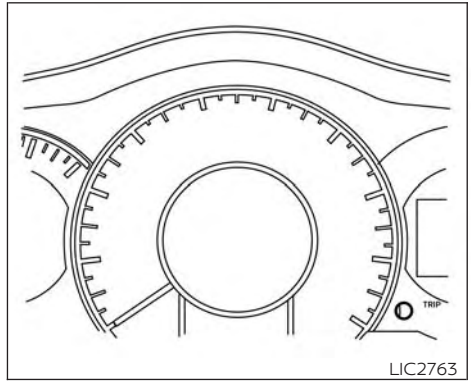

Type B (if so equipped)

Speedometer

The speedometer indicates vehicle speed.

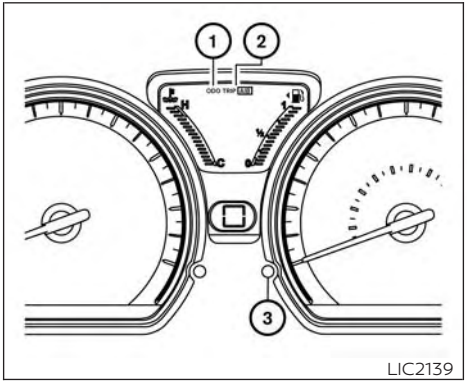

Type A (if so equipped)

Odometer/Twin trip odometer

The odometer/twin trip odometer is displayed when the ignition switch is placed in the ON position.

The odometer ① records the total distance the vehicle has been driven.

The twin trip odometer ② records the distance of individual trips.

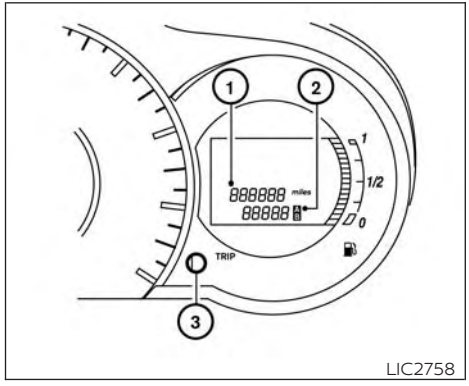

Type B (if so equipped)

Changing the display

Press the change button ③ to change the display as follows:

Type A (if so equipped) : Odometer (ODO) → Trip A → Trip B → Instant fuel consumption → Average fuel consumption → DTE (cruising range) → Outside Air Temperature (if so equipped) → Odometer (ODO)

Type B (if so equipped) : Trip A → Trip B → Trip A

Resetting the trip odometer

Press the change/reset button ③ for more than 1 second to reset the currently displayed trip odometer to zero.

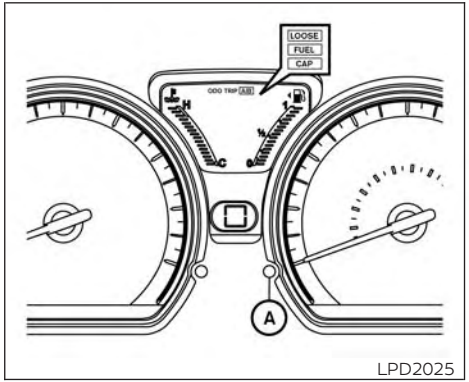

LPD2025

Type A (if so equipped)

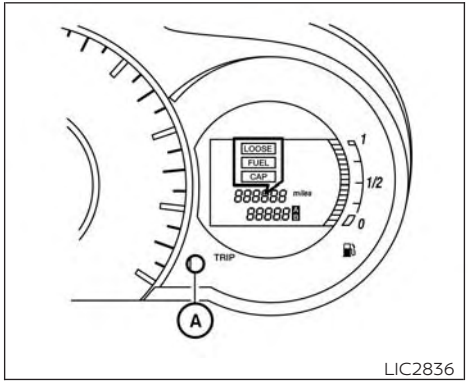

LIC2836

Type B (if so equipped)

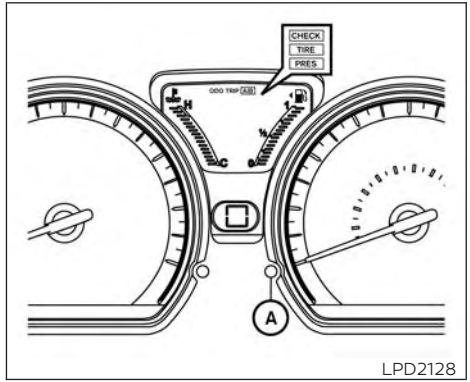

LPD2128

Type A (if so equipped)

Loose fuel cap warning message

Push the reset button Ⓐ for more than 1 second to reset the LOOSE FUEL CAP warning message after the fuel cap has been tightened. For additional information, refer to "Fuel-filler cap" in the "Pre-driving checks and adjustments" section of this manual.

Check tire pressure warning message (if so equipped)

The CHECK TIRE PRES (pressure) warning message is displayed when the low tire pressure warning light is illuminated and low tire pressure is detected. Check and adjust the tire pressure to the recommended COLD tire pressure shown on the Tire and Loading Information label.

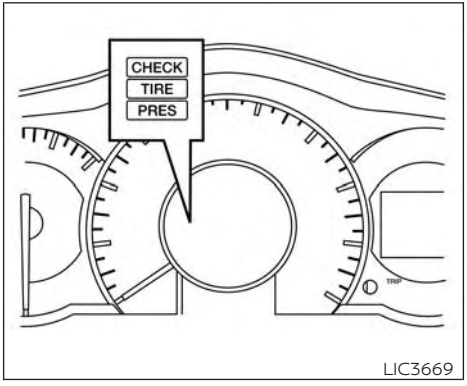

Type B (if so equipped)

Type A (if so equipped): The CHECK TIRE PRES warning message can be turned off using the reset button Ⓐ on the meter, the low tire pressure warning light will not be turned off.

Type B (if so equipped): The CHECK TIRE PRES warning message is displayed when the low tire pressure warning light is illuminated and low tire pressure is detected. Check and adjust the tire pressure to the recommended COLD tire pressure shown on the tire and Loading Information label.

The low tire pressure warning light remains illuminated until the tires are inflated to the recommended COLD tire pressure.

Type A Only (if so equipped): The CHECK TIRE PRES warning message is displayed each time the ignition switch is placed in the ON position as long as the low tire pressure warning light remains illuminated.

For additional information, refer to "Low tire pressure warning light" in this section, "Tire Pressure Monitoring System (TPMS)" in the "Starting and driving" section and "Wheels and tires" in the "Do-it-yourself" section of this manual.

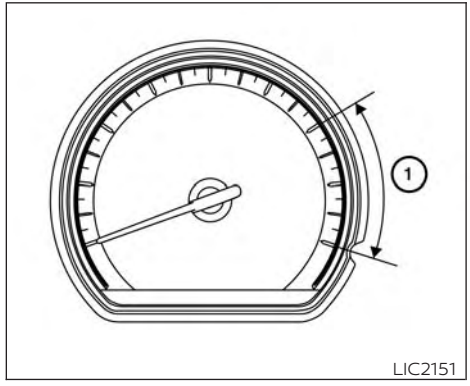

Type A (if so equipped)

TACHOMETER

The tachometer indicates engine speed in revolutions per minute (rpm).

Do not rev the engine into the red zone ①.

⚠ CAUTION

When engine speed approaches the red zone, shift to a higher gear or reduce engine speed. Operating the engine in the red zone may cause serious engine damage.

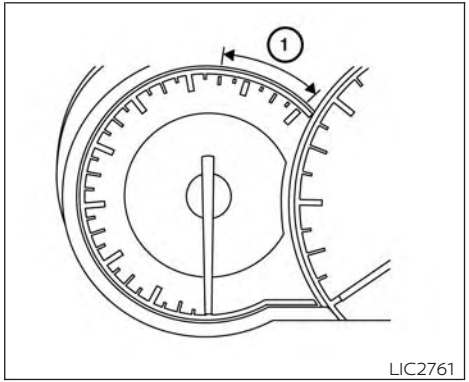

Type B (if so equipped)

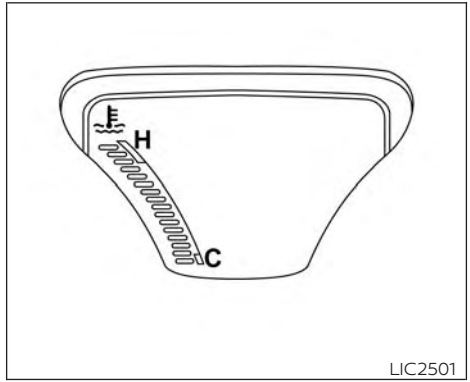

Type A (if so equipped)

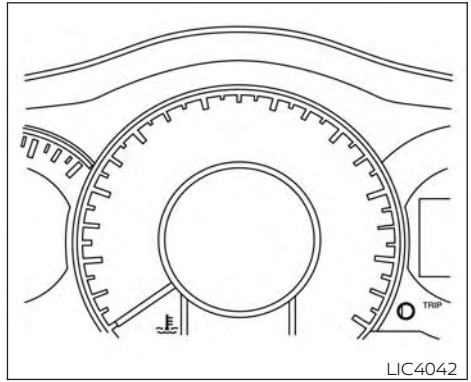

Type B (if so equipped)

ENGINE COOLANT TEMPERATURE GAUGE

NOTE:

The ignition switch must be placed in the ON position for the gauge to give a reading.

Type A (if so equipped): The gauge indicates the engine coolant temperature. The engine coolant temperature will vary with the outside air temperature and driving conditions.

Type B (if so equipped): Engine coolant temperature monitoring is performed by the high temperature warning light. For additional information, refer to "High temperature warning light (red)" in this section.

⚠ CAUTION

If the gauge indicates a coolant temperature near the hot (H) end of the normal range, reduce vehicle speed to decrease the temperature. If the gauge is over the normal range, stop the vehicle as soon as safely possible. If the engine is overheated, continued operation of the vehicle may seriously damage the engine. For additional information, refer to "If your vehicle overheats" in the "In case of emergency" section of this manual.

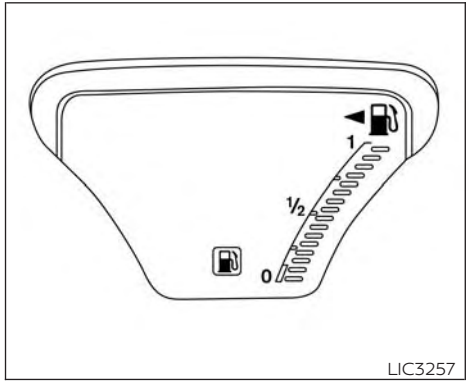

Type A (if so equipped)

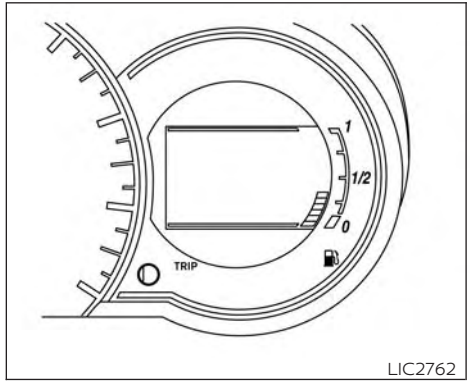

Type B (if so equipped)

FUEL GAUGE

The gauge indicates the **approximate** fuel level in the tank when the ignition switch is placed in the ON position.

The gauge may move slightly during braking, turning, acceleration, or going up or down hills.

The low fuel warning light will turn on when the amount of fuel in the tank is getting low.

Refill the fuel tank before the gauge registers 0 (Empty).

The ◀⛽ indicates that the fuel-filler door is located on the driver's side of the vehicle.

⚠ CAUTION

- **If the vehicle runs out of fuel, the check engine light may come on. Refuel as soon as possible. After a few driving trips, the light should turn off. If the light remains on after a few driving trips, have the vehicle inspected. It is recommended that you visit a NISSAN dealer for this service.**
- **For additional information, refer to "Malfunction Indicator Light (MIL)" in this section.**

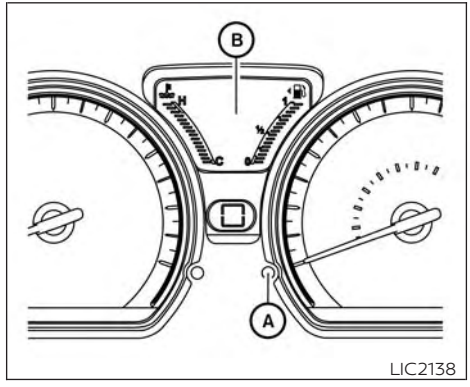

Type A (if so equipped)

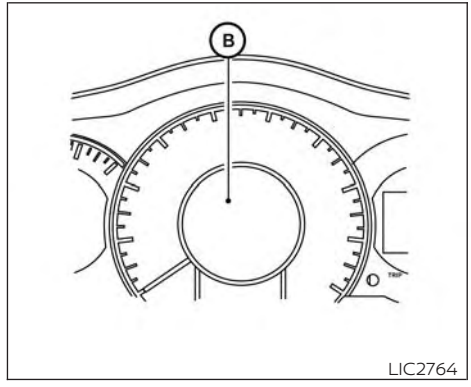

Type B (if so equipped)

TRIP COMPUTER

Type A (if so equipped): When the ignition switch is placed in the ON position, modes of the trip computer can be selected by pushing the trip computer change button Ⓐ on the instrument panel located near the speedometer.

The following modes can be selected in the display Ⓑ:

- Odometer
- Trip A
- Trip B
- Instant fuel consumption
- Average fuel consumption
- Distance to empty
- Outside air temperature (if so equipped)

Type B (if so equipped): When the ignition switch is placed in the ON position, modes of the trip computer can be selected by pushing the menu button on the steering wheel.

The following modes can be selected in the display (B):

- Instant fuel consumption
- Average fuel consumption
- Distance to empty
- Average speed
- Travel time
- Outside air temperature (if so equipped)

Instant fuel consumption

The instant fuel consumption mode shows the instant fuel economy. The display updates instantly when driving.

Average fuel consumption (mpg or l (liter)/100km)

The average fuel consumption mode shows the average fuel consumption since the last reset. Resetting is done by pressing the trip or change button for more than approximately 1 second. The display is updated every 30 seconds. At about the first 1/3 mi (500 m) after a reset, the display shows (----).

Distance to empty

The distance to empty mode provides you with an estimation of the distance that can be driven before refueling. The range is constantly being calculated, based on the amount of fuel in the fuel tank and the actual fuel consumption.

The distance to empty includes a low range warning feature: when the fuel level is low, the distance to empty is automatically selected and the digits blink in order to draw the driver's attention. Press the trip computer change/reset button if you wish to return to the mode that was selected before the warning occurred.

When the fuel level drops even lower, the distance to empty will display (----).

Average speed

The average speed mode shows the average vehicle speed since the last reset. Resetting is done by pushing the menu button on the steering wheel for longer than 1 second.

Travel time

The travel time mode (elapsed time) shows the time since the last reset. The displayed time can be reset by pushing the menu button on the steering wheel for longer than 1 second.

Trip computer reset

Type A (if so equipped): Pushing the change button for more than 3 seconds will reset all modes except Trip A and Distance To Empty (DTE).

Type B (if so equipped): Pushing the menu button ❑ on the steering wheel for more than 3 seconds will reset average fuel economy, average speed and travel time.

Outside air temperature (ICY-°F or °C) (if so equipped)

The outside air temperature is displayed in °F or °C.

The outside air temperature mode includes a low temperature warning feature: below 37°F (3°C), the outside air temperature mode is automatically selected and ICY will illuminate in order to draw the driver's attention. Press the trip or change button to toggle to the next mode, if desired. The ICY indicator will remain illuminated as long as the temperature remains below 39°F (4°C).

The ambient temperature sensor is located in front of the radiator. The sensor may be affected by road or engine heat, wind directions and other driving conditions. The display may differ from the actual ambient temperature or the temperature displayed on various signs or billboards.

SERVICE INTERVAL REMINDER (if so equipped)

When the ignition switch is placed in the ON position, a wrench symbol and the distance to oil change information will illuminate on the display for approximately 5 seconds. The wrench symbol and distance to oil change switch to oil display status. The oil display status then switches to the odometer and twin trip odometer information mode that was displayed before the ignition switch was placed in the ACC, OFF or LOCK position.

The oil level display status provides specific information regarding your approximate engine oil level.

If the oil level is sufficient, "Oil Good" is displayed for approximately 10 seconds. If the oil level is low, "Oil Lo" blinks for approximately 30 seconds in order to draw your attention to necessary action.

Quickly push and release the trip odometer reset switch on the instrument panel located near the speedometer during the "Oil Good" or "Oil Lo" mode to display an approximate oil level indication.

In case of low engine oil level, refer to "Engine oil" in the "Do-it-yourself" section for the proper engine oil refilling procedure.

Oil change schedule set up (if so equipped)

It is possible to adjust the interval distance to oil change by pushing the trip odometer reset switch on the instrument panel located near the speedometer for 3 seconds while the wrench symbol and distance to oil change are displayed. The symbol and distance display will start flashing and the display shows the current interval. Push the switch to increase the interval distance. Each step increases the interval distance by 500 mi (1,000 km). The interval distance can be set up to 18,000 mi (30,000 km) after which the display returns to zero.

If no further action is made, the display returns to oil display status indication and the new interval is set.

If the interval distance is set to 0, the display will skip the distance to oil change information and wrench symbol display mode and will directly display the oil display status ("Oil Good" or "Oil Lo"). In order to return to the distance to oil change information and wrench symbol display mode, push the trip computer change button on the instrument panel located near the speedometer for approximately 3 seconds after the ignition switch has been turned to the ON position, and adjust the distance to oil change schedule as previously described.

For additional information, refer to "Standard maintenance" in the "Maintenance and schedules" section of this manual.

⚠ CAUTION

- **The oil level should be checked regularly. Operating with insufficient amount of oil level can damage the engine and such damage is not covered by the warranty.**
- **NISSAN recommends checking the oil level every 3,000 mi (5,000 km).**

WARNING LIGHTS, INDICATOR LIGHTS AND AUDIBLE REMINDERS

ABS or (ABS) Anti-lock Braking System (ABS) warning light	P SHIFT P position selecting warning light (if so equipped)	Malfunction Indicator Light (MIL)
BRAKE or (!) Brake warning light	PS Power steering warning light	O/D OFF Overdrive OFF indicator light (if so equipped)
Charge warning light	Seat belt warning light and chime	Security indicator light (if so equipped)
Door open warning light	Supplemental air bag warning light	SET SET indicator light (if so equipped)
Engine oil pressure warning light	P Continuously Variable Transmission (CVT) position indicator light (if so equipped)	Side light and headlight indicator light (green) (if so equipped)
High temperature warning light (red) (if so equipped)	CRUISE CRUISE indicator light (if so equipped)	Slip indicator light
Low fuel warning light	Engine start operation indicator light (if so equipped)	Turn signal/hazard indicator lights
Low tire pressure warning light (if so equipped)	Front fog light indicator light (if so equipped)	OFF Vehicle Dynamic Control (VDC) OFF indicator light
Low windshield-washer fluid warning light (if so equipped)	OFF 2 Front passenger air bag status light	
KEY NISSAN Intelligent Key® warning light (if so equipped)	High beam indicator light (blue)	

CHECKING LIGHTS

With all doors closed, apply the parking brake, fasten the seat belts and place the ignition switch in the ON position without starting the engine. The following lights (if so equipped) will come on:

BRAKE or , , , , PS

The following lights (if so equipped) will come on briefly and then go off:

ABS or , (red), , O/D OFF ,

, , , , , KEY

If any light does not come on or operate in a way other than described, it may indicate a burned-out bulb and/or a system malfunction. Have the system checked. It is recommended that you visit a NISSAN dealer for this service.

WARNING LIGHTS

This vehicle has various warning lights that may illuminate to indicate a potential problem. For additional information, refer to the specific light in this section.

ABS or Anti-lock Braking System (ABS) warning light

When the ignition switch is placed in the ON position, the ABS warning light illuminates and then turns off. This indicates the ABS is operational.

If the ABS warning light illuminates while the engine is running or while driving, it may indicate the ABS is not functioning properly. Have the system checked. It is recommended that you visit a NISSAN dealer for this service.

If an ABS malfunction occurs, the anti-lock function is turned off. The brake system then operates normally but without anti-lock assistance. For additional information, refer to "Brake system" in the "Starting and driving" section of this manual.

BRAKE or Brake warning light

This light functions for both the parking brake and the foot brake systems.

Parking brake indicator

When the ignition switch is placed in the ON position, the light comes on when the parking brake is applied.

Low brake fluid warning light

When the ignition switch is placed in the ON position, the light warns of a low brake fluid level. If the light comes on while the engine is running with the parking brake not applied, stop the vehicle and perform the following:

1. Check the brake fluid level. Add brake fluid as necessary. For additional information, refer to "Brake fluid" in the "Do-it-yourself" section of this manual.
2. If the brake fluid level is correct, have the warning system checked. It is recommended that you visit a NISSAN dealer for this service.

⚠ WARNING

- **Your brake system may not be working properly if the warning light is on. Driving could be dangerous. If you judge it to be safe, drive carefully to the nearest service station for repairs. Otherwise, have your vehicle towed because driving it could be dangerous.**
- **Pressing the brake pedal with the engine stopped and/or a low brake fluid level may increase your stopping distance and braking will require greater pedal effort as well as pedal travel.**
- **If the brake fluid level is below the MINIMUM or MIN mark on the brake fluid reservoir, do not drive until the brake system has been checked. It is recommended that you visit a NISSAN dealer for this service.**

Charge warning light

If this light comes on while the engine is running, it may indicate the charging system is not functioning properly. Turn the engine off and check the drive belt. If the belt is loose, broken, missing, or if the light remains on, have your vehicle serviced immediately. It is recommended that you visit a NISSAN dealer for this service.

⚠ CAUTION

Do not continue driving if the drive belt is loose, broken or missing.

Door open warning light

This light comes on when any of the doors are not closed securely while the ignition switch is in the ON position.

Engine oil pressure warning light

This light warns of low engine oil pressure. If the light flickers or comes on during normal driving, pull off the road in a safe area, stop the engine **immediately** and call a NISSAN dealer or other authorized repair shop.

The engine oil pressure warning light is not designed to indicate a low oil level. Use the dipstick to check the oil level. For additional information, refer to "Engine oil" in the "Do-it-yourself" section of this manual.

⚠ CAUTION

Running the engine with the engine oil pressure warning light on could cause serious damage to the engine almost immediately. Such damage is not covered by the NISSAN New Vehicle Limited Warranty. Turn off the engine as soon as it is safe to do so.

High temperature warning light (red) (if so equipped)

When the ignition switch is placed in the ON position, the high temperature warning light illuminates and then turns off. This indicates that the high temperature sensor in the engine coolant system is operational.

When driving, the high temperature warning light may turn off. This indicates that the engine coolant temperature is within the normal range.

⚠ CAUTION

If the high temperature warning light illuminates while the engine is running, it may indicate the engine temperature is extremely high. Stop the vehicle safely as soon as possible. If the vehicle is overheated, continuing vehicle operation may seriously damage the engine. For additional information, refer to "If your vehicle overheats" in the "In case of emergency" section of this manual.

Low fuel warning light

This light comes on when the fuel level in the fuel tank is getting low. Refuel as soon as it is convenient, preferably before the fuel gauge reaches 0 (Empty). **There will be a small reserve of fuel in the tank when the fuel gauge reaches 0 (Empty), showing no more fuel bars.**

Low tire pressure warning light (if so equipped)

Your vehicle is equipped with a Tire Pressure Monitoring System (TPMS) that monitors the tire pressure of all tires except the spare.

The low tire pressure warning light warns of low tire pressure or indicates that the TPMS is not functioning properly.

After the ignition switch is placed in the ON position, this light illuminates for about 1 second and turns off.

Low tire pressure warning

If the vehicle is being driven with low tire pressure, the warning light will illuminate.

A CHECK TIRE PRES (pressure) warning message is also displayed in the odometer.

When the low tire pressure warning light illuminates, you should stop and adjust the tire pressure of all four tires to the recommended COLD tire pressure shown on the Tire and Loading Information label located in the driver's door opening. The low tire pressure warning light does not automatically turn off when the tire pressure is adjusted. After the tire is inflated to the recommended pressure, the vehicle must be driven at speeds above 16 mph (25 km/h) to activate the TPMS and turn off the low tire pressure warning light. Use a tire pressure gauge to check the tire pressure.

The low tire pressure warning light remains illuminated until the tires are inflated to the recommended COLD tire pressure. The CHECK TIRE PRES warning message is displayed each time the ignition switch is placed in the ON position as long as the low tire pressure warning light remains illuminated.

For additional information, refer to "Check tire pressure warning message" in this section and "Tire Pressure Monitoring System (TPMS)" in the "Starting and driving" section and in the "In case of emergency" section of this manual.

TPMS malfunction

If the TPMS is not functioning properly, the low tire pressure warning light will flash for approximately 1 minute when the ignition switch is placed in the ON position. The light will remain on after 1 minute. Have the system checked. It is recommended that you visit a NISSAN dealer for this service. The "CHECK TIRE PRES" warning does not appear if the low tire pressure warning light illuminates to indicate a TPMS malfunction.

For additional information, refer to "Tire Pressure Monitoring System (TPMS)" in the "Starting and driving" section and "Tire pressure" in the "Do-it-yourself" section of this manual.

⚠ WARNING

- **Radio waves could adversely affect electric medical equipment. Those who use a pacemaker should contact the electric medical equipment manufacturer for the possible influences before use.**
- **If the light does not illuminate with the ignition switch placed in the ON position, have the vehicle checked as soon as possible. It is recommended that you visit a NISSAN dealer for this service.**
- **If the light illuminates while driving, avoid sudden steering maneuvers or abrupt braking, reduce vehicle speed, pull off the road to a safe location and stop the vehicle as soon as possible. Driving with under-inflated tires may permanently damage the tires and increase the likelihood of tire failure. Serious vehicle damage could occur and may lead to an accident and could result in serious personal injury or death. Check the tire pressure for all four tires. Adjust the tire pressure to the recommended COLD tire pressure show on the Tire and Loading Information label located in the driver's door opening to turn the low tire pressure warning light off. If the light still illuminates while driving after adjusting the tire pressure, a tire may be flat or the TPMS may be malfunctioning. If you have a flat tire, replace it with a spare tire as soon as possible. If no tire is flat and all tires are properly inflated, have the vehicle checked. It is recommended that you visit a NISSAN dealer for this service.**
- **When replacing a wheel without the TPMS such as the spare tire, the TPMS will not function and the low tire pressure warning light will flash for approximately 1 minute. The light will remain on after 1 minute. Have your tires replaced and/or TPMS system reset as soon as possible. It is recommended that you visit a NISSAN dealer for these services.**
- **Replacing tires with those not originally specified by NISSAN could affect the proper operation of the TPMS.**

⚠ CAUTION

- **The TPMS is not a substitute for the regular tire pressure check. Be sure to check the tire pressure regularly.**
- **If the vehicle is being driven at speeds of less than 16 mph (25 km/h), the TPMS may not operate correctly.**
- **Be sure to install the specified size of tires to the four wheels correctly.**

Low windshield-washer fluid warning light (if so equipped)

This light comes on when the windshield-washer fluid is at a low level. Add windshield-washer fluid as necessary. For additional information, refer to "Windshield-washer fluid" in the "Do-it-yourself" section of this manual.

NISSAN Intelligent Key® warning light (if so equipped)

The Intelligent Key warning light illuminates green when the ignition switch can be turned. The Intelligent Key warning light illuminates red when the ignition switch cannot be turned.

The Intelligent Key warning light blinks yellow if the Intelligent Key is taken outside of the vehicle while the ignition switch is placed in the ACC or ON position.

- If the Intelligent Key warning light blinks, make sure of the location of the Intelligent Key as soon as possible. The Intelligent Key should be carried by the driver while operating the vehicle.
- The Intelligent Key warning light turns off about 10 seconds after the Intelligent Key is brought inside the vehicle.

The Intelligent Key warning light blinks green indicating that the Intelligent Key battery is almost discharged.

For additional information, refer to "NISSAN Intelligent Key®" in the "Pre-driving checks and adjustments" section of this manual.

P position selecting warning light (if so equipped)

The light blinks red and the warning buzzer sounds if you are outside of the vehicle with the Intelligent Key and the engine is off, but the shift lever is not in the P (Park) position.

When the warning light blinks, place the ignition switch in the ON position, move the shift lever to the P (Park) position, then place the ignition switch in the LOCK position.

Power steering warning light

WARNING

- **If the engine is not running or is turned off while driving, the power assist for the steering will not work. Steering will be harder to operate.**
- **When the power steering warning light illuminates with the engine running, there will be no power assist for the steering. You will still have control of the vehicle, but the steering will be harder to operate. Have the power steering system checked. It is recommended that you visit a NISSAN dealer for this service.**

When the ignition switch is placed in the ON position, the power steering warning light illuminates. After starting the engine, the power steering warning light turns off. This indicates the power steering is operational.

If the power steering warning light illuminates while the engine is running, it may indicate the power steering is not functioning properly and may need servicing. Have the power steering checked. It is recommended that you visit a NISSAN dealer for this service.

When the power steering warning light illuminates with the engine running, there will be no power assist for the steering, but you will still have control of the vehicle. At this time, greater steering effort is required to operate the steering wheel, especially in sharp turns and at low speeds.

For additional information, refer to "Power steering" in the "Starting and driving" section of this manual.

Seat belt warning light and chime

The light and chime remind you to fasten your seat belts. The light illuminates whenever the ignition switch is placed in the ON or START position and remains illuminated until the driver's seat belt is fastened. At the same time, the chime sounds for about 6 seconds unless the driver's seat belt is securely fastened.

The seat belt warning light may also illuminate if the front passenger's seat belt is not fastened when the front passenger's seat is occupied. For 7 seconds after the ignition switch is placed in the ON position, the system does not activate the warning light for the front passenger.

For additional information, refer to "Seat belts" in the "Safety—Seats, seat belts and supplemental restraint system" section of this manual.

Supplemental air bag warning light

When the ignition switch is placed in the ON or START position, the supplemental air bag warning light illuminates for about 7 seconds and then turns off. This means the system is operational.

If any of the following conditions occur, the front air bag, side air bag, curtain air bag, and pretensioner seat belt systems need servicing:

- The supplemental air bag warning light remains on after approximately 7 seconds.
- The supplemental air bag warning light flashes intermittently.
- The supplemental air bag warning light does not come on at all.

It is recommended that you visit a NISSAN dealer for these services.

Unless checked and repaired, the supplemental restraint system (air bag system) and/or the pretensioner(s) may not function properly. For additional information, refer to "Supplemental Restraint System (SRS)" in the "Safety—Seats, seat belts and supplemental restraint system" section of this manual.

⚠ WARNING

If the supplemental air bag warning light is on, it could mean that the front air bag, side air bag, curtain air bag, and/or pretensioner systems will not operate in an accident. To help avoid injury to yourself or others, have your vehicle checked as soon as possible. It is recommended that you visit a NISSAN dealer for this service.

INDICATOR LIGHTS

This vehicle has various indicator lights that may illuminate to indicate a system status. For additional information, refer to the specific light in this section.

Continuously Variable Transmission (CVT) position indicator light (if so equipped)

When the ignition switch is placed in the ON position, the indicator light shows the shift lever position. For additional information, refer to "Driving the vehicle" in the "Starting and driving" section of this manual.

CRUISE indicator light (if so equipped)

The light comes on when the cruise control ON/OFF switch is pushed. The light goes out when the ON/OFF switch is pushed again. When the CRUISE indicator light comes on, the cruise control system is operational. For additional information, refer to "Cruise control" in the "Starting and driving" section of this manual.

Engine start operation indicator light (if so equipped)

For vehicles equipped with push button ignition this indicator illuminates when the ignition switch is in the LOCK, OFF, ACC or ON position with the shift lever in the P (Park) position.

This indicator means that the engine will start by pushing the push-button ignition switch with the brake pedal depressed.

Front fog light indicator light (if so equipped)

The front fog light indicator light illuminates when the front fog lights are on. For additional information, refer to "Fog light switch" in this section.

Front passenger air bag status light

The front passenger air bag status light will be lit and the passenger front air bag will be off depending on how the front passenger seat is being used.

For additional information, refer to "Front passenger air bag and status light" in the "Safety — Seats, seat belts and supplemental restraint system" section of this manual.

High beam indicator light (blue)

This blue light comes on when the headlight high beams are on and goes out when the low beams are selected.

The high beam indicator light also comes on when the passing signal is activated.

Malfunction Indicator Light (MIL)

If this indicator light comes on steady or blinks while the engine is running, it may indicate a potential emission control malfunction.

The may also come on steady if the fuel-filler cap is loose or missing or if the vehicle runs out of fuel. Check to make sure the fuel-filler cap is installed and closed tightly and that the vehicle has at least 3 gal (11.4 L) of fuel in the fuel tank.

After a few driving trips, the light should turn off if no other potential emission control system malfunction exists.

If this indicator light comes on steady for 20 seconds and then blinks for 10 seconds when the engine is not running, it indicates that the vehicle is not ready for an emission control system inspection/maintenance test. For additional information, refer to "Readiness for Inspection/Maintenance (I/M) test" in the "Technical and consumer information" section of this manual.

Operation

The MIL will come on in one of two ways:

- MIL on steady — An emission control system malfunction has been detected. Check the fuel-filler cap. If the LOOSE FUEL CAP warning message is displayed in the odometer, and the fuel-filler cap is loose or missing, tighten or install the cap and continue to drive the vehicle. The light should turn off after a few driving trips. If the light does not turn off after a few driving trips, have the vehicle inspected. It is recommended that you visit a NISSAN dealer for this service. You do not need to have your vehicle towed to the dealer.
- MIL blinking — An engine misfire has been detected which may damage the emission control system. To reduce or avoid emission control system damage:
  - do not drive at speeds above 45 mph (72 km/h);
  - avoid hard acceleration or deceleration;
  - avoid steep uphill grades;
  - if possible, reduce the amount of cargo being hauled.

The MIL may stop blinking and come on steady. Have the vehicle inspected. It is recommended that you visit a NISSAN dealer for this service. You do not need to have your vehicle towed to the dealer.

CAUTION

Continued vehicle operation without having the emission control system checked and repaired as necessary could lead to poor driveability, reduced fuel economy, and possible damage to the emission control system.

Overdrive OFF indicator light (if so equipped)

The overdrive OFF indicator light illuminates when the overdrive OFF mode is selected.

For additional information, refer to "Driving the vehicle" in the "Starting and driving" section of this manual.

Security indicator light (if so equipped)

For vehicles without Intelligent Key: This light blinks whenever the ignition switch is placed in the LOCK, OFF or ACC position.

For vehicles with Intelligent Key: This light blinks when the ignition switch is placed in the LOCK position with the key removed from the ignition switch.

The blinking security indicator light indicates that the security systems equipped on the vehicle are operational.

For additional information, refer to "Security systems" in this section.

SET indicator light (if so equipped)

This light comes on while the vehicle speed is controlled by the cruise control system. If the light blinks while the engine is running, it may indicate the cruise control system is not functioning properly. Have the system checked. It is recommended that you visit a NISSAN dealer for this service.

For additional information, refer to "Cruise control" in the "Starting and driving" section of this manual.

Side light and headlight indicator light (green) (if so equipped)

The side light and headlight indicator light illuminates when the side light or headlight position is selected. For additional information, refer to "Headlight and turn signal switch" in this section.

Slip indicator light

This indicator will blink when the Vehicle Dynamic Control (VDC) system is operating, thus alerting that the vehicle is nearing its traction limits. The road surface may be slippery.

Turn signal/hazard indicator lights

The appropriate light flashes when the turn signal switch is activated.

NOTE:

In case of a turn signal light bulb malfunction, the turn signal will flash at a higher frequency when the turn signal switch is activated.

Both lights flash when the hazard switch is turned on.

For additional information, refer to "Lights" in the "Do-it-yourself" section of this manual.

Vehicle Dynamic Control (VDC) OFF indicator light

This indicator light comes on when the VDC OFF switch is pushed to off. This indicates the VDC system is not operating.

Push the VDC OFF switch again or restart the engine and the system will operate normally. For additional information, refer to "Vehicle Dynamic Control (VDC) system" in the "Starting and driving" section of this manual.

The VDC light also comes on when you place the ignition switch in the ON position. The light will turn off after about 2 seconds if the system is operational. If the light stays on or comes on along with the indicator light while you are driving, have the VDC system checked. It is recommended that you visit a NISSAN dealer for this service.

While the VDC system is operating, you might feel a slight vibration or hear the system working when starting the vehicle or accelerating, but this is normal.

AUDIBLE REMINDERS

Brake pad wear warning

The disc brake pads have audible wear warnings. When a disc brake pad requires replacement, it makes a high pitched scraping sound when the vehicle is in motion, whether or not the brake pedal is depressed. Have the brakes checked as soon as possible if the warning sound is heard.

Key reminder chime

A chime sounds if the driver's door is opened while the key is left in the ignition switch. Remove the key and take it with you when leaving the vehicle.

Light reminder chime

With the ignition switch placed in the OFF position, a chime sounds when the driver's door is opened if the headlights or parking lights are on.

Turn the headlight control switch off before leaving the vehicle.

NISSAN Intelligent Key® door buzzer (if so equipped)

The Intelligent Key door buzzer sounds if any one of the following improper operations is found.

- The ignition switch is not returned to the LOCK position when locking the doors.
- The Intelligent Key is left inside the vehicle when locking the doors.
- The Intelligent Key is taken outside the vehicle when operating the vehicle.
- Any doors are not closed securely when locking the doors.

When the buzzer sounds, be sure to check both the vehicle and the Intelligent Key. For additional information, refer to "NISSAN Intelligent Key®" in the "Pre-driving checks and adjustments" section.

Parking brake reminder chime

A chime sounds if the parking brake is set and the vehicle is driven. The chime will stop if the parking brake is released or the vehicle speed returns to zero.

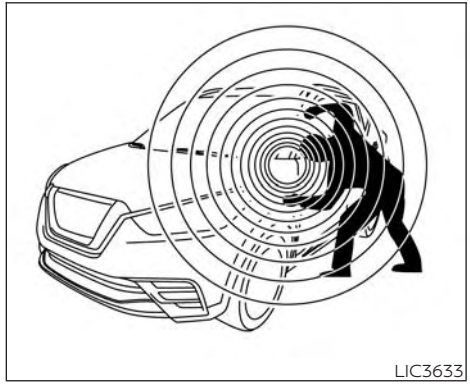

Your vehicle has one type of security system:

- NISSAN Vehicle Immobilizer System

NISSAN VEHICLE IMMOBILIZER SYSTEM

The NISSAN Vehicle Immobilizer System will not allow the engine to start without the use of a registered key.

If the engine fails to start using a registered key (for example, when interference is caused by another registered key, an automated toll road device or automatic payment device on the key ring), restart the engine using the following procedures:

1. Leave the ignition switch in the ON position for approximately 5 seconds.
2. Place the ignition switch in the OFF or LOCK position and wait approximately 10 seconds.
3. Repeat steps 1 and 2.
4. Restart the engine while holding the device (which may have caused the interference) separate from the registered key.

If the no start condition re-occurs, NISSAN recommends placing the registered key on a separate key ring to avoid interference from other devices.

Never leave these keys in the vehicle.

FCC Notice:

For USA:

This device complies with Part 15 of the FCC Rules. Operation is subject to the following two conditions: (1) This device may not cause harmful interference, and (2) this device must accept any interference received, including interference that may cause undesired operation.

NOTE:

Changes or modifications not expressly approved by the party responsible for compliance could void the user's authority to operate the equipment.

For Canada:

This device complies with Industry Canada licence-exempt RSS standard(s). Operation is subject to the following two conditions: (1) this device may not cause interference, and (2) this device must accept any interference received, including interference that may cause undesired operation of the device.

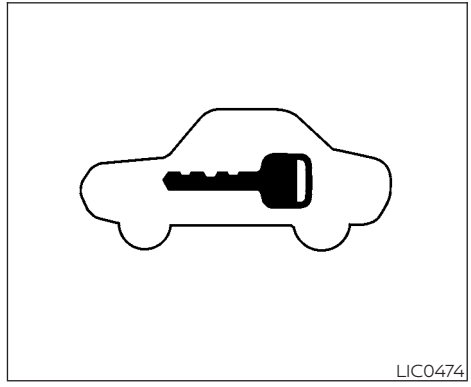

Security indicator light

For vehicles without Intelligent Key: This light blinks whenever the ignition switch is placed in the LOCK, OFF or ACC position.

For vehicles with Intelligent Key: This light blinks when the ignition switch is placed in the LOCK position with the key removed from the ignition switch.

This function indicates the NISSAN Vehicle Immobilizer System is operational.

If the NISSAN Vehicle Immobilizer System is malfunctioning, the light will remain on while the ignition switch is placed in the ON position.

If the light still remains on and/or the engine will not start, seek service for the NISSAN Vehicle Immobilizer System as soon as possible. Please bring all registered keys that you have. It is recommended that you visit a NISSAN dealer for this service.

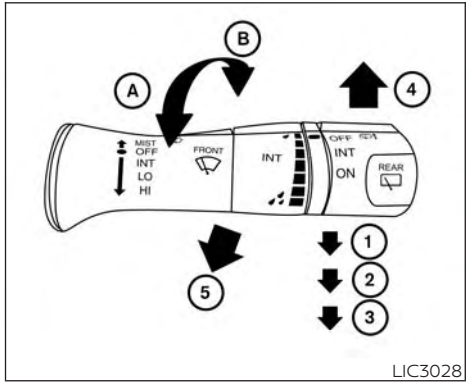

SWITCH OPERATION

⚠ WARNING

In freezing temperatures the washer solution may freeze on the windshield and obscure your vision which may lead to an accident. Warm the windshield with the defroster before you wash the windshield.

⚠ CAUTION

- **Do not operate the washer continuously for more than 30 seconds.**
- **Do not operate the washer if the reservoir is empty.**
- **Do not fill the windshield-washer fluid reservoir with washer fluid concentrates at full strength. Some methyl alcohol based washer fluid concentrates may permanently stain the grille if spilled while filling the windshield-washer fluid reservoir.**
- **Pre-mix windshield-washer fluid concentrates with water to the manufacturer's recommended levels before pouring the fluid into the windshield-washer fluid reservoir. Do not use the windshield-washer fluid reservoir to mix the windshield-washer fluid concentrate and water.**

The windshield wiper and washer operates when the ignition switch is in the ON position.

Push the lever down to operate the wiper at the following speed:

① Intermittent (INT) — intermittent operation can be adjusted (if so equipped) by turning the knob toward Ⓐ (Slower) or Ⓑ (Faster).

② Low (LO) — continuous low speed operation

③ High (HI) — continuous high speed operation

Push the lever up ④ to have one sweep operation (MIST) of the wiper.

Pull the lever toward you ⑤ to operate the washer. The wiper will also operate several times.

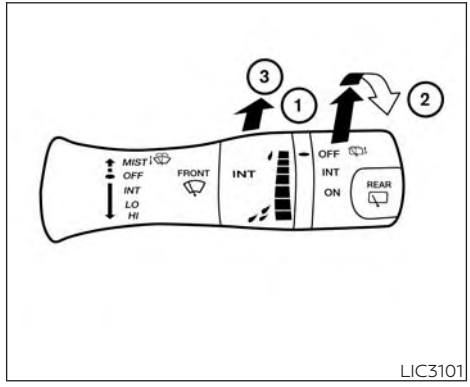

REAR SWITCH OPERATION

The rear window wiper and washer operate when the ignition switch is placed in the ON position.

Turn the switch clockwise from the OFF position to operate the wiper.

① Intermittent (INT) – intermittent operation (not adjustable)

② ON – continuous low speed operation

Push the switch forward ③ to operate the washer. The wiper will also operate several times.

⚠ WARNING

In freezing temperatures the washer solution may freeze on the window and obscure your vision. Warm the rear window with the defroster before you wash the rear window.

⚠ CAUTION

- **Do not operate the washer continuously for more than 30 seconds.**
- **Do not operate the washer if the windshield-washer fluid reservoir is empty.**
- **Do not fill the windshield-washer fluid reservoir with windshield-washer fluid concentrates at full strength. Some methyl alcohol based windshield-washer fluid concentrates may permanently stain the grille if spilled while filling the windshield-washer fluid reservoir.**

- **Pre-mix windshield-washer fluid concentrates with water to the manufacturer's recommended levels before pouring the fluid into the windshield-washer fluid reservoir. Do not use the windshield-washer fluid reservoir to mix the windshield-washer fluid concentrate and water.**

REAR WINDOW AND OUTSIDE MIRROR (if so equipped) DEFROSTER SWITCH

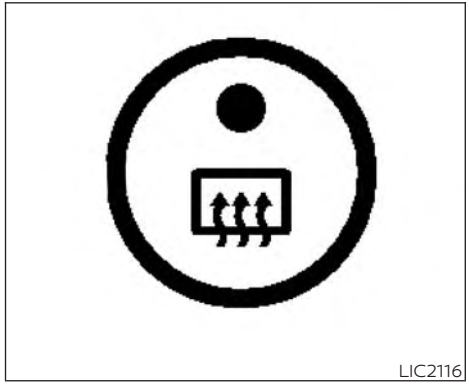

To defrost the rear window glass and outside mirrors (if so equipped), start the engine and push the rear window defroster switch on. The rear window defroster indicator light on the switch comes on. Push the switch again to turn the defroster off.

The rear window defroster automatically turns off after approximately 15 minutes.

⚠ CAUTION

When cleaning the inner side of the rear window, be careful not to scratch or damage the rear window defroster.

HEADLIGHT AND TURN SIGNAL SWITCH

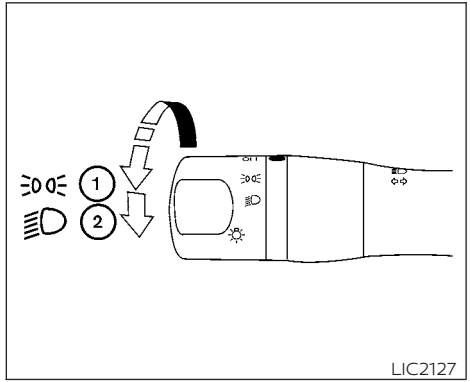

Type A (if so equipped)

HEADLIGHT CONTROL SWITCH

Lighting

① Rotate the switch to the position, and the front parking, tail, license plate, and instrument panel lights will come on.

② Rotate the switch to the position, and the headlights will come on and all the other lights remain on.

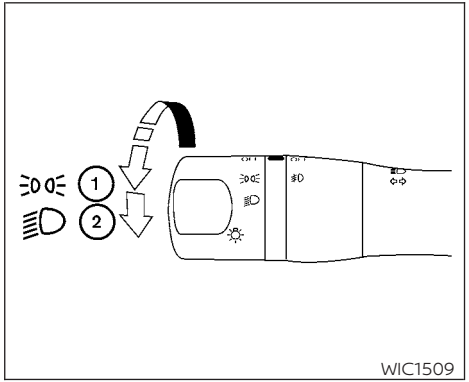

Type B (if so equipped)

⚠ CAUTION

Use the headlights with the engine running to avoid discharging the vehicle battery.

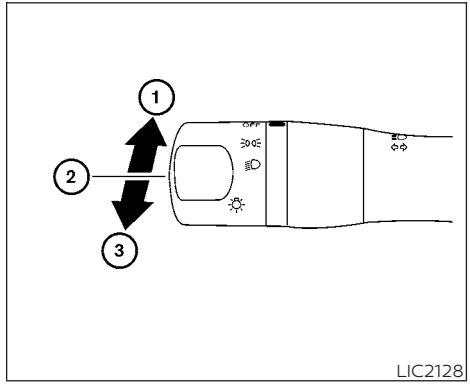

Headlight beam select

① To select the high beam function, engage the headlights, then push the lever forward. The high beam lights come on and the indicator light illuminates (blue). For additional information, refer to "Headlight control switch" in this section.

② Pull the lever back to return to the low beam.

③ Pulling and releasing the lever flashes the headlight high beams on and off, the headlights need not be on for this function.

Battery saver system

If the ignition switch is placed in the OFF position while the headlight switch is in the or position, the headlights will turn off after a period of time.

⚠ CAUTION

Even though the battery saver feature automatically turns off the headlights after a period of time, you should turn the headlight switch to the OFF position when the engine is not running to avoid discharging the vehicle battery.

DAYTIME RUNNING LIGHTS (DRL) SYSTEM (Canada only)

The daytime running lights automatically illuminate when the engine is started with the parking brake released. The daytime running lights operate with the headlight switch in the OFF position or in the position. Turn the headlight switch to the position for full illumination when driving at night.

If the parking brake is applied before the engine is started, the daytime running lights do not illuminate. The daytime running lights illuminate when the parking brake is released. The daytime running lights will remain on until the ignition switch is placed in the OFF position or the headlight switch is turned to the position.

WARNING

When the daytime running light system is active, tail lights on your vehicle are not on. It is necessary at dusk to turn on your headlights. Failure to do so could cause an accident injuring yourself and others.

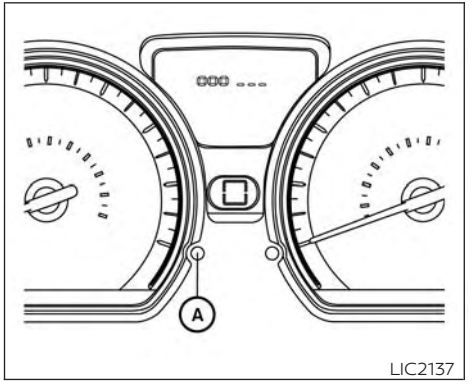

Type A (if so equipped)

INSTRUMENT BRIGHTNESS CONTROL

The instrument brightness control operates when the vehicle is in the ON position.

Type A (if so equipped):

Press the control Ⓐ to adjust the brightness of instrument panel lights when driving at night.

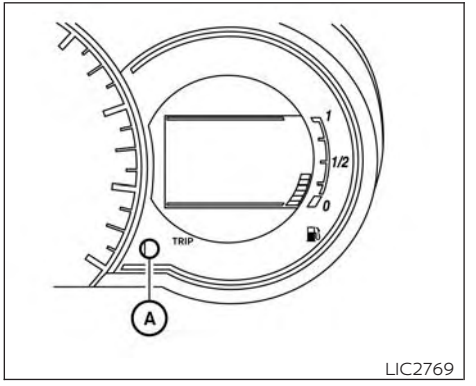

Type B (if so equipped)

Type B (if so equipped):

Turn the knob Ⓐ left continuously for illumination to decrease and turn the knob right continuously for illumination to increase.

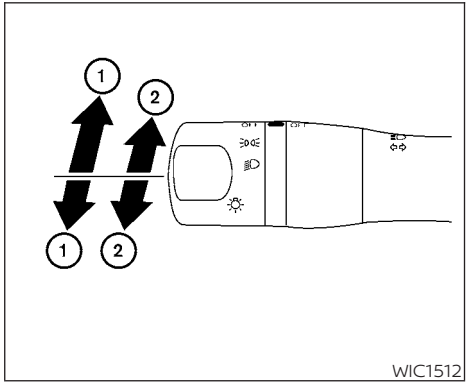

TURN SIGNAL SWITCH

Turn signal

① Move the lever up or down to signal the turning direction. When the turn is completed, the turn signal cancels automatically.

Lane change signal

② Move the lever up or down until the turn signal begins to flash, but the lever does not latch, to signal a lane change. Hold the lever until the lane change is completed.
Move the lever up or down until the turn signal begins to flash, but the lever does not latch, and release the lever. The turn signal will automatically flash three times.

Choose the appropriate method to signal a lane change based on road and traffic conditions.

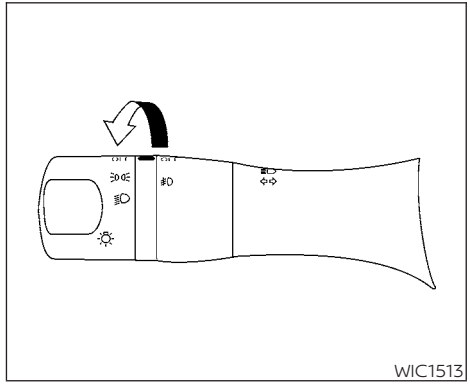

FOG LIGHT SWITCH (if so equipped)

To turn the fog lights on, turn the headlight switch to the position, then turn the fog light switch to the position.
To turn the fog lights off, turn the fog light switch to the OFF position.

The headlights must be on and the low beams selected for the fog lights to operate. The fog lights automatically turn off when the high beam headlights are selected.

HORN

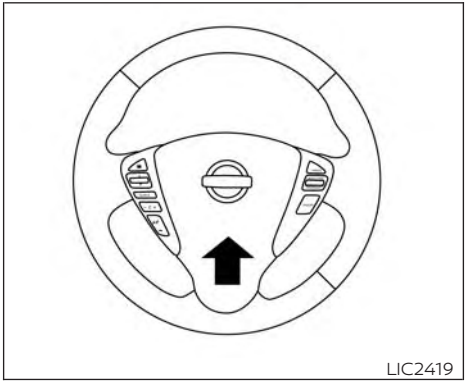

Type A (if so equipped)

To sound the horn, push near the horn icon(s) on the steering wheel.

⚠ WARNING

Do not disassemble the horn. Doing so could affect proper operation of the supplemental front air bag system. Tampering with the supplemental front air bag system may result in serious personal injury.

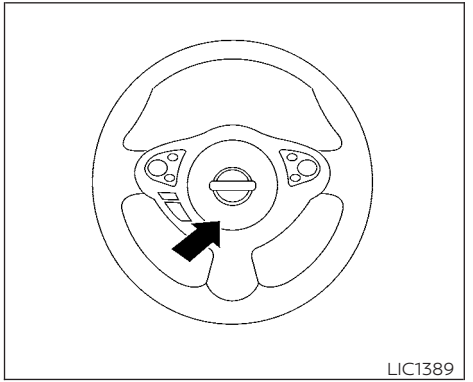

Type B (if so equipped)

HEATED SEAT SWITCHES (if so equipped)

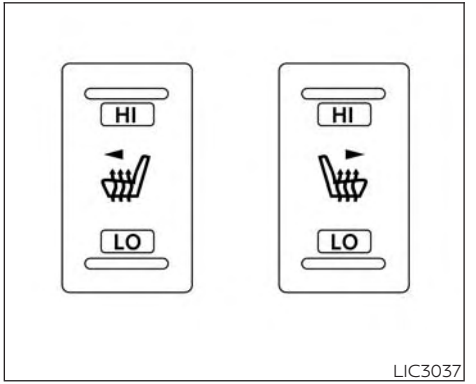

⚠ WARNING

Do not use or allow occupants to use the seat heater if you or the occupants cannot monitor elevated seat temperatures or have an inability to feel pain in body parts in contact with the seat. Use of the seat heater by such people could result in serious injury.

⚠ CAUTION

- **The battery could run down if the seat heater is operated while the engine is not running.**
- **Do not use the seat heater for extended periods or when no one is using the seat.**
- **Do not put anything on the seat which insulates heat, such as a blanket, cushion or seat cover, etc. Otherwise, the seat may become overheated.**
- **Do not place anything hard or heavy on the seat or pierce it with a pin or similar object. This may result in damage to the heater.**
- **Any liquid spilled on the heated seat should be removed immediately with a dry cloth.**
- **When cleaning the seat, never use gasoline, benzine, thinner, or any similar materials.**
- **If any malfunctions are found or the heated seat does not operate, turn the switch off and have the system checked. It is recommended that you visit a NISSAN dealer for this service.**

The front seats are warmed by built-in heaters.

1. Start the engine.
2. Select the switch that corresponds to the seat you wish to heat, the switches are located on the center console. Push the LO or HI position of the switch, as desired. The indicator light on the switch will illuminate.

   The heater is controlled by a thermostat, automatically turning the heater on and off. The indicator light will remain on as long as the switch is on.
3. When the seat is warmed or before you leave the vehicle, be sure to turn the switch off.

VEHICLE DYNAMIC CONTROL (VDC) OFF SWITCH

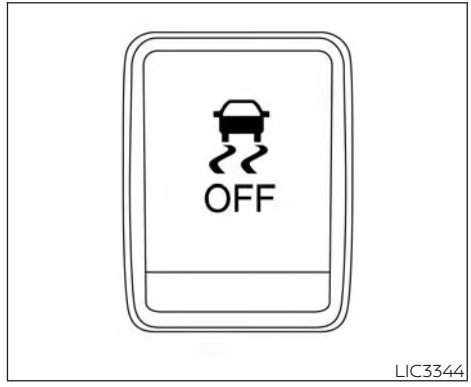

The vehicle should be driven with the VDC system on for most driving conditions.

If the vehicle is stuck in mud or snow, the VDC system reduces the engine output to reduce wheel spin. The engine speed will be reduced even if the accelerator is depressed to the floor. If maximum engine power is needed to free a stuck vehicle, turn the VDC system off.

To turn off the VDC system, push the VDC OFF switch. The indicator will come on.

Push the VDC OFF switch again or restart the engine to turn on the system. For additional information, refer to "Vehicle Dynamic Control (VDC) system" in the "Starting and driving" section of this manual.

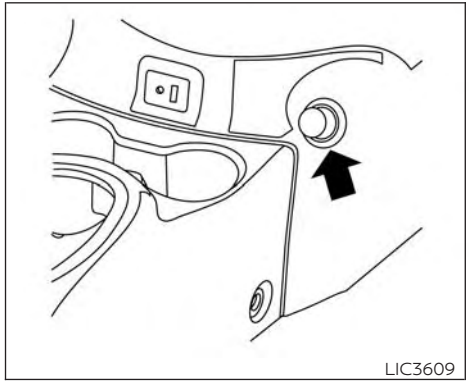

Instrument panel

The power outlets are for powering electrical accessories such as cellular telephones. The outlets are rated at 12 volt, 120W (10A) maximum.

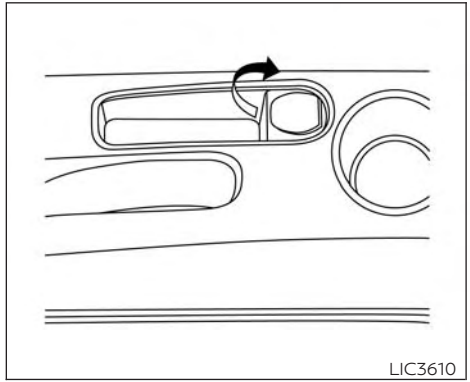

Console (if so equipped)

⚠ CAUTION

- **The outlet and plug may be hot during or immediately after use.**
- **Only certain power outlets are designed for use with a cigarette lighter unit. Do not use any other power outlet for an accessory lighter. It is recommended that you visit a NISSAN dealer for additional information**
- **Do not use with accessories that exceed a 12 volt, 120W (10A) power draw.**

- **Do not use double adapters or more than one electrical accessory.**
- **Use power outlets with the engine running to avoid discharging the vehicle battery.**
- **Avoid using power outlets when the air conditioner, headlights or rear window defroster is on.**
- **Before inserting or disconnecting a plug, be sure the electrical accessory being used is turned off.**
- **Push the plug in as far as it will go. If good contact is not made, the plug may overheat or the internal temperature fuse may open.**
- **When not in use, be sure to close the cap. Do not allow water or any other liquid to contact the outlet.**

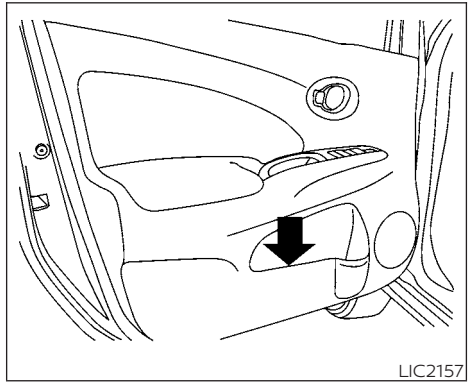

FRONT-DOOR POCKETS

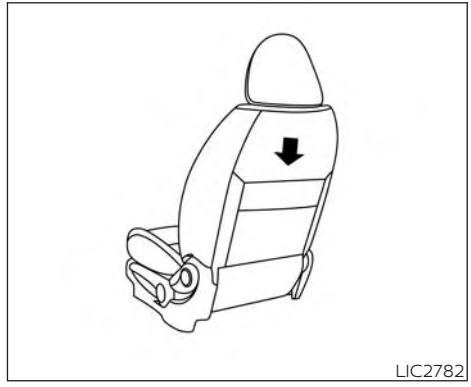

SEATBACK POCKET

The seatback pocket is located on the back of the front passenger seat. The pocket can be used to store maps.

⚠ WARNING

To ensure proper operation of the passenger's NISSAN Advanced Air Bag System, please observe the following items:

- **Do not allow a passenger in the rear seat to push or pull on the seatback pocket or head restraint/headrest.**
- **Do not place heavy loads heavier than 9.1 lbs. (4 kg) on the seatback, head restraint/headrest, or in the seatback pocket.**

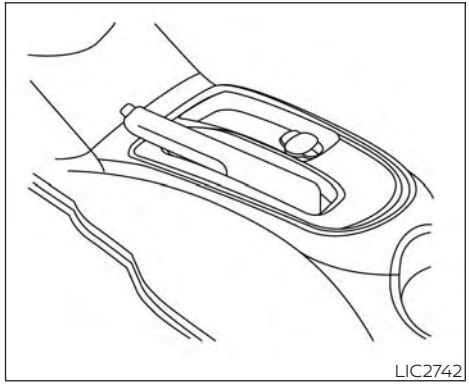

STORAGE TRAY

⚠ WARNING

Do not place sharp objects in the trays to help prevent injury in an accident or sudden stop.

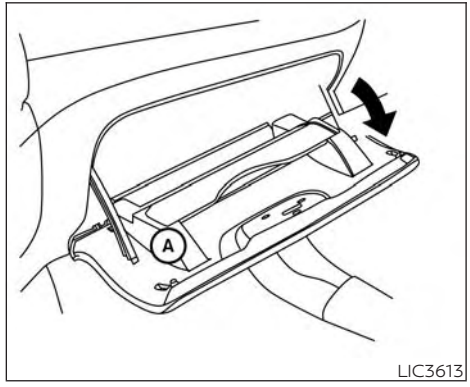

GLOVE BOX

Open the glove box by pulling the handle.

Use pocket on glove box lid Ⓐ to store and hide small objects.

⚠ WARNING

Keep glove box lid closed while driving to help prevent injury in an accident or a sudden stop.

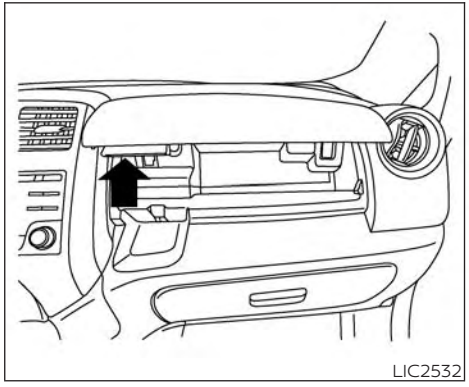

UPPER GLOVE BOX

Open the upper glove box by pulling the handle.

⚠ WARNING

Keep glove box lid closed while driving to help prevent injury in an accident or a sudden stop.

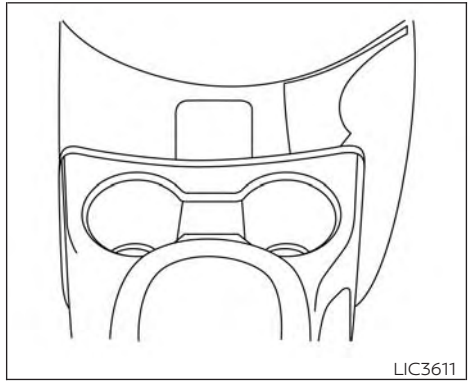

Front

CUP HOLDERS

⚠ WARNING

Avoid abrupt starting and braking when the cup holder is being used to prevent spilling the drink. If the liquid is hot, it can scald you or your passenger.

⚠ CAUTION

Use only soft cups in the cup holder. Hard objects can injure you in an accident.

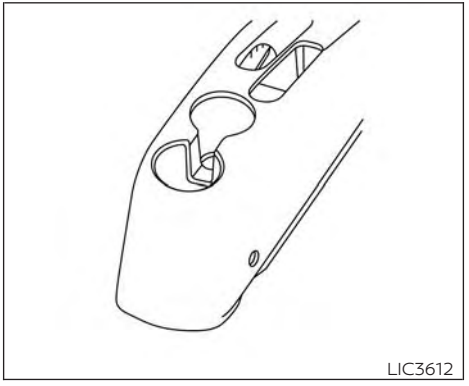

Rear – console

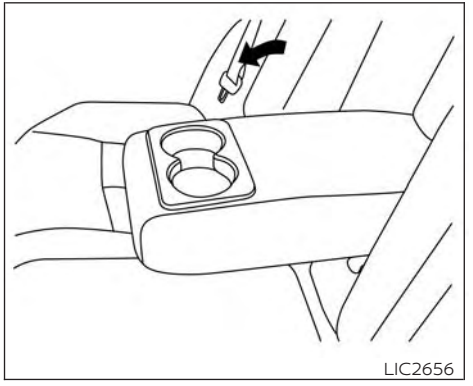

Rear – armrest (if so equipped)

Lower the rear center armrest to access the cup holders.

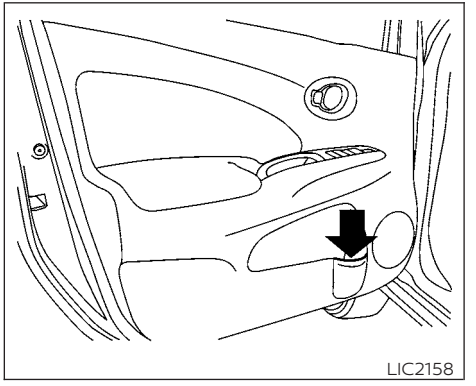

Bottle holder

⚠ CAUTION

- **Do not use bottle holder for any other objects that could be thrown about in the vehicle and possibly injure people during sudden braking or an accident.**
- **Do not use bottle holder for open liquid containers.**

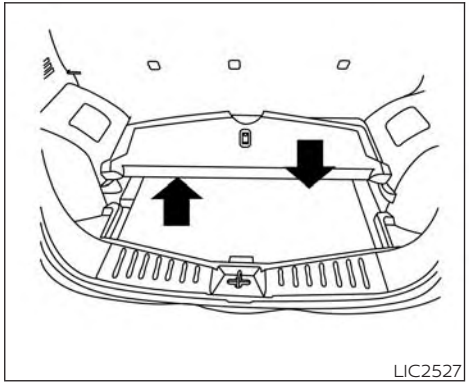

DIVIDE-N-HIDE® ADJUSTABLE FLOOR (if so equipped)

⚠ WARNING

Do not put objects heavier than 110 lbs. (50 kg) on the load floor.

To lower:

1. Lift and open the panel.
2. Move the load floor along the upper trim panel channels toward the rear of vehicle until it reaches the end of the slot.
3. Move the load floor along the lower trim panel channels toward the front of the vehicle until the latches lock it into place.
4. Lift and close the panel.

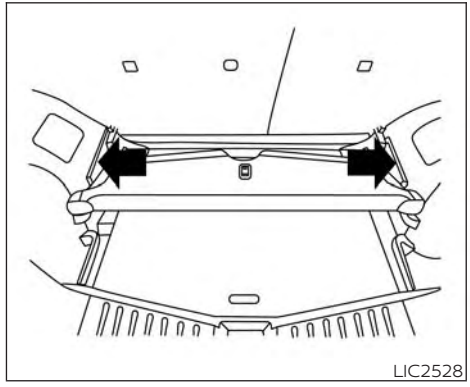

To raise:

1. Lift and open the panel
2. Move the load floor along the lower trim panel channels toward the rear of the vehicle until it reaches the end of the slot.
3. Move the load floor along the upper trim panel channels toward the front of the vehicle until the latches lock it into place.
4. Lift and close the panel.

CARGO COVER (if so equipped)

⚠WARNING

- **Never put anything on the cargo cover, no matter how small. Any object on it could cause an injury in an accident or sudden stop.**
- **Do not put objects heavier than 44 lbs. (20 kg) on the cargo cover for long periods of time.**
- **Do not leave the cargo cover in the vehicle with it disengaged from the holder.**
- **Properly secure all cargo with ropes or straps to help prevent it from sliding or shifting. Do not place cargo higher than the seatbacks. In a sudden stop or collision, unsecured cargo could cause personal injury.**
- **Your child could be seriously injured or killed in a collision if the child restraint top tether strap is damaged.**
- **Properly secure cargo and do not allow it to contact the top tether strap when it is attached to the top tether anchor. Cargo that is not properly secured or cargo that contacts the top tether strap may damage the top tether strap during a collision. If the cargo cover contacts the top tether strap when it is attached to the top tether anchor, remove the cargo cover from the vehicle or secure it on the cargo floor below its attachment location. If the cargo cover is not removed, it may damage the top tether strap during a collision. Your child could be seriously injured or killed in a collision if the child restraint top tether strap is damaged.**

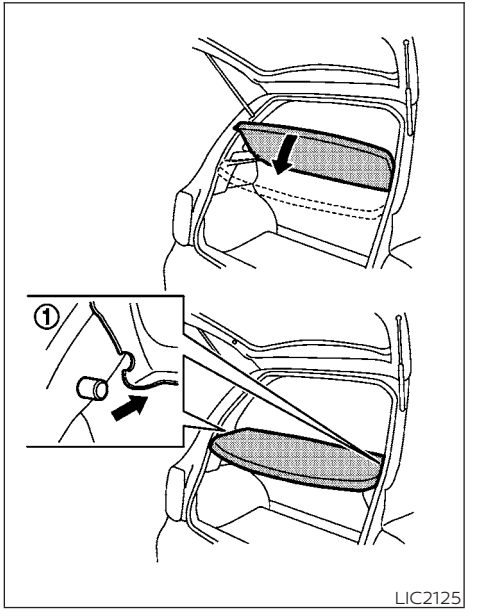

The cargo cover keeps the luggage compartment contents hidden from the outside.

To remove the cargo cover:

- Remove the straps from the rear hatch.
- Remove the cargo cover holders① from the rear pillar.
- Lower the cargo cover down against the seatback, rotate and remove from the cargo area.

POWER WINDOWS (if so equipped)

⚠ WARNING

- **Make sure that all passengers have their hands, etc., inside the vehicle while it is in motion and before closing the windows. Use the window lock switch to prevent unexpected use of the power windows.**
- **To help avoid risk of injury or death through unintended operation of the vehicle and/or its systems, including entrapment in windows or inadvertent door lock activation, do not leave children, people who require the assistance of others or pets unattended in your vehicle. Additionally, the temperature inside a closed vehicle on a warm day can quickly become high enough to cause a significant risk of injury or death to people and pets.**

The power windows operate when the ignition switch is placed in the ON position or for a period of time after the ignition switch is placed in the OFF position. If the driver's or passenger's door is opened during this period of time, the power to the windows is canceled.

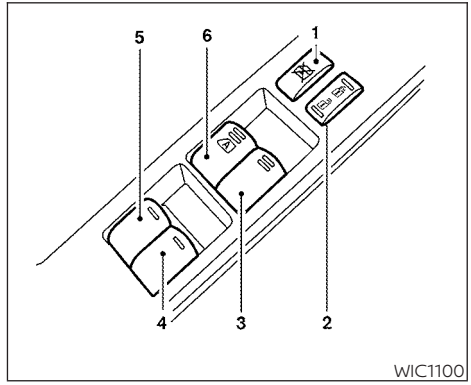

1. Window lock button
2. Power door lock switch
3. Front passenger's side window switch
4. Right rear passenger's window switch
5. Left rear passenger's window switch
6. Driver's side automatic switch

Driver's side power window switch

The driver's side control panel is equipped with switches to open or close the front and rear passenger windows.

To open a window, push the switch and hold it down. To close a window, pull the switch and hold it up. To stop the opening or closing function at any time, simply release the switch.

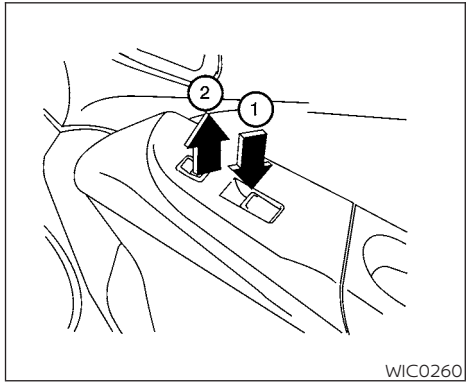

Front passenger's power window switch

The passenger's window switch operates only the corresponding passenger's window. To open the window, push the switch and hold it down ①. To close the window, pull the switch up ②.

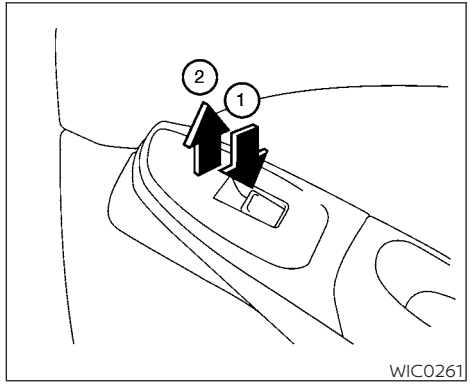

Rear power window switch

The rear power window switches open or close only the corresponding windows. To open the window, push the switch and hold it down ①. To close the window, pull the switch up ②.

Locking passengers' windows

When the window lock switch is depressed, only the driver's side window can be opened or closed. Push it again to cancel the window lock function.

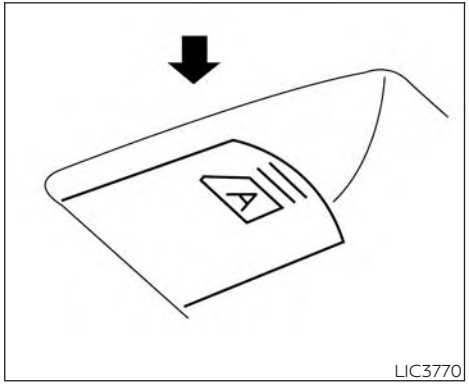

Automatic operation

To fully open a window equipped with automatic operation, push the window switch down to the second detent and release it; it need not be held. The window automatically opens all the way. To stop the window, lift the switch up while the window is opening.

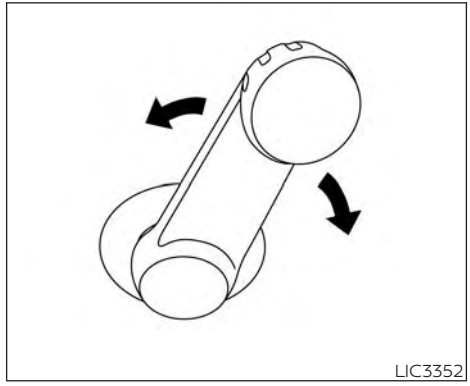

MANUAL WINDOWS (if so equipped)

The side windows can be opened or closed by turning the hand crank on each door.

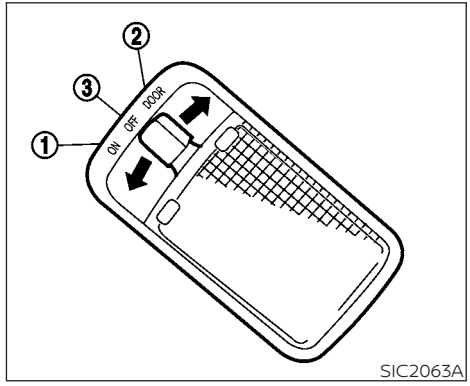

The interior light has a three-position switch and operates regardless of ignition switch position.

When the switch is in the ON position ①, the interior lights illuminate, regardless of door position. The lights will go off after a period of time unless the ignition switch is placed in the ACC or ON position.

When the switch is in the DOOR position ②, the interior lights will stay on for a period of time when:

- The doors are unlocked by the key fob, a key or the power door lock switch while all doors are closed and the ignition switch is placed in the OFF position.
- The driver's door is opened and then closed while the key is removed from the ignition switch.
- The key is removed from the ignition switch while all doors are closed.

The lights will turn off while the timer is activated when:

- The driver's door is locked by the key fob, a key, or the power door lock switch.
- The ignition switch is placed in the ON position.

When the switch is in the OFF position ③, the interior lights do not illuminate, regardless of door position.

The lights will turn off automatically after a period of time while doors are open to prevent the battery from becoming discharged.

⚠ CAUTION

Do not use for extended periods of time with the engine stopped. This could result in a discharged battery.

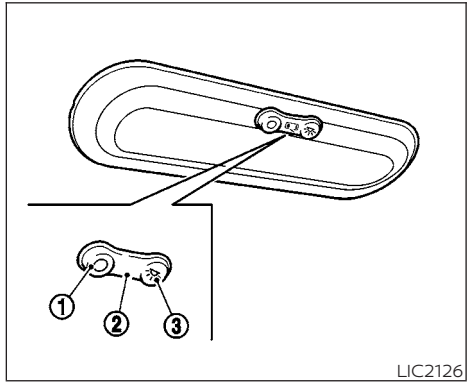

LIC2126

MAP LIGHT

The map light has a three-position switch and operates regardless of ignition switch position.

When the switch is in the ON position ③, the map light illuminates, regardless of door position. The light will go off after a period of time unless the ignition switch is placed in the ACC or ON position.

When the switch is in the DOOR position ②, the map light will stay on for a period of time when:

- The doors are unlocked by the key fob (if so equipped), a key or the power door lock switch while all doors are closed and the ignition switch is placed in the OFF position.
- The driver's door is opened and then closed while the key is removed from the ignition switch.
- The key is removed from the ignition switch while all doors are closed.

The light will turn off while the timer is activated when:

- The driver's door is locked by the key fob (if so equipped), a key, or the power door lock switch.
- The ignition switch is placed in the ON position.

When the switch is in the OFF position ①, the map light does not illuminate, regardless of door position.

The light will turn off automatically after a period of time while doors are open to prevent the battery from becoming discharged.

⚠ CAUTION

Do not use for extended periods of time with the engine stopped. This could result in a discharged battery.

The light illuminates when the rear hatch is opened. When the rear hatch is closed, the light will turn off.

The light also illuminates with other interior lights when the interior light switch is in the DOOR position. For additional information, refer to "Interior lights" in this section.

The lights will turn off automatically after a period of time while doors are open to prevent the battery from becoming discharged.

MEMO

3 Pre-driving checks and adjustments

Keys 3-2
NISSAN Intelligent Key® (if so equipped) 3-3
NISSAN Vehicle Immobilizer System keys (if so equipped) 3-5
Doors 3-5
Locking with key 3-6
Locking with inside lock knob 3-7
Locking with power door lock switch (if so equipped) 3-7
Automatic door locks (if so equipped) 3-7
Child safety rear door lock 3-8
Remote keyless entry system (models without NISSAN Intelligent Key®) (if so equipped) 3-8
How to use remote keyless entry system 3-9
NISSAN Intelligent Key® (if so equipped) 3-12
Operating range 3-14
Door locks/unlocks precaution 3-14
NISSAN Intelligent Key® operation 3-15
How to use the remote keyless entry function 3-18
Warning lights and audible reminders 3-21
Warning signals 3-22
Troubleshooting guide (Continuously Variable Transmission only) 3-24
Troubleshooting guide (manual transmission only) 3-25
Hood 3-26
Rear hatch 3-27
Opening the rear hatch 3-27
Rear hatch release 3-28
Fuel-filler door 3-28
Opener operation 3-28
Fuel-filler cap 3-29
Steering wheel 3-31
Tilt operation 3-31
Sun visors 3-31
Vanity mirrors (if so equipped) 3-32
Mirrors 3-32
Rearview mirror 3-32
Outside mirrors 3-33

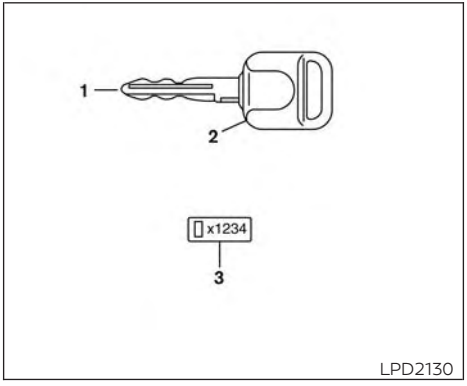

Type A (if so equipped)

1. Master key
2. Transponder chip (if so equipped)
3. Key number plate

A key number plate is supplied with your keys. Record the key number and keep it in a safe place (such as your wallet), not in the vehicle. If you lose your keys, it is recommended that you visit a NISSAN dealer for duplicates by using the key number. NISSAN does not record key numbers so it is very important to keep track of your key number plate.

A key number is only necessary when you have lost all keys and do not have one to make a duplicate. If you still have a key, it can be duplicated without knowing the key number.

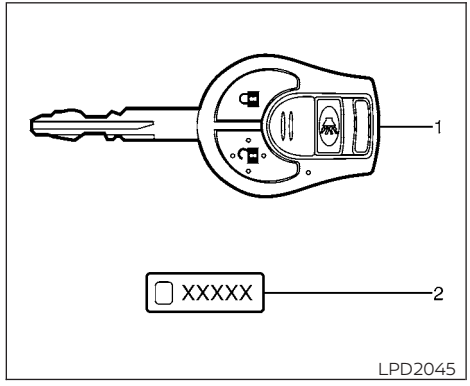

Type B (if so equipped)

1. Integrated door lock key fob
2. Key number plate

⚠ CAUTION

Do not leave the ignition key inside the vehicle when you leave the vehicle.

A key number plate is supplied with your keys. Record the key number and keep it in a safe place (such as your wallet), not in the vehicle. If you lose your keys, it is recommended that you visit a NISSAN dealer for duplicates by using the key number.

NISSAN does not record key numbers so it is very important to keep track of your key number plate.

A key number is only necessary when you have lost all keys and do not have one to duplicate from. If you still have a key, it can be duplicated without knowing the key number.

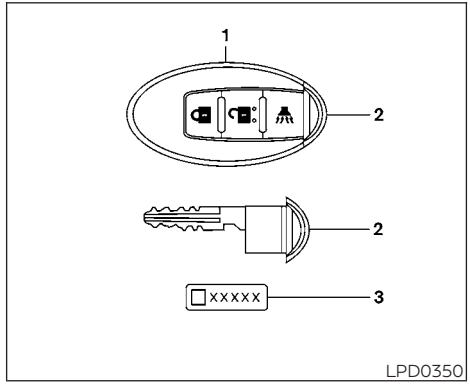

1. Two Intelligent Keys
2. Mechanical keys (inside Intelligent Keys)
3. Key number plate

NISSAN INTELLIGENT KEY® (if so equipped)

Your vehicle can only be driven with the Intelligent Keys which are registered to your vehicle's Intelligent Key system components and NISSAN Vehicle Immobilizer System components.

Never leave these keys in the vehicle.

As many as four Intelligent Keys can be registered and used with one vehicle. The new keys must be registered prior to use with the Intelligent Key system and NISSAN Vehicle Immobilizer System of your vehicle. It is recommended that you visit a NISSAN dealer for this service. Since the registration process requires erasing all memory in the Intelligent Key components when registering new keys, be sure to take all Intelligent Keys that you have to the NISSAN dealer.

A key number plate is supplied with your keys. Record the key number and keep it in a safe place (such as your wallet), not in the vehicle. If you lose your keys, it is recommended that you visit a NISSAN dealer for duplicates by using the key number. NISSAN does not record key numbers so it is very important to keep track of your key number plate.

A key number is only necessary when you have lost all keys and do not have one to duplicate from. If you still have a key, it can be duplicated without knowing the key number.

⚠ CAUTION

Listed below are conditions or occurrences which will damage the Intelligent Key:

- **Do not allow the Intelligent Key, which contains electrical components, to come into contact with water or salt water. This could affect the system function.**
- **Do not drop the Intelligent Key.**
- **Do not strike the Intelligent Key sharply against another object.**
- **Do not change or modify the Intelligent Key.**
- **Wetting may damage the Intelligent Key. If the Intelligent Key gets wet, immediately wipe until it is completely dry.**
- **Do not place the Intelligent Key for an extended period in an area where temperatures exceed 140°F (60°C).**
- **Do not attach the Intelligent Key with a key holder that contains a magnet.**
- **Do not place the Intelligent Key near equipment that produces a magnetic field, such as a TV, audio equipment and personal computers.**

If an Intelligent Key is lost or stolen, NISSAN recommends erasing the ID code of that Intelligent Key from the vehicle. This may prevent the unauthorized use of the Intelligent Key to operate the vehicle. For information regarding the erasing procedure, it is recommended that you visit a NISSAN dealer.

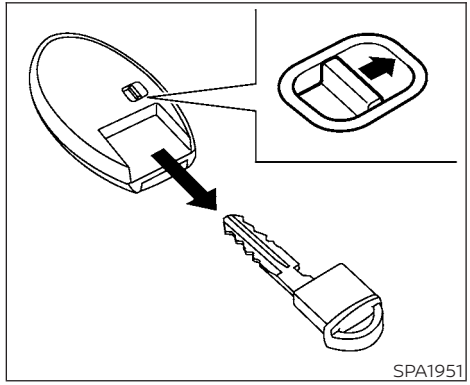

Mechanical key

The Intelligent Key contains the mechanical key, which can be used in case of a discharged battery.

To remove the mechanical key, release the lock knob on the back of the Intelligent Key.

To install the mechanical key, firmly insert it into the Intelligent Key until the lock knob returns to the lock position.

The mechanical key can be used for operation in the same way as an ordinary key.

⚠ CAUTION

Always carry the mechanical key installed in the Intelligent Key slot.

For additional information, refer to "Doors" in this section and "Storage" in the "Instruments and controls" section of this manual.

NISSAN VEHICLE IMMOBILIZER SYSTEM KEYS (if so equipped)

You can only drive your vehicle using the keys which are registered to the NISSAN Vehicle Immobilizer System components in your vehicle.

A mechanical key can be used for all the locks.

Never leave the keys in the vehicle.

Additional or replacement keys:

If you still have a key, the key number is not necessary when you need extra NISSAN Vehicle Immobilizer System keys. Your existing key can be duplicated without knowing the key number. As many as four NISSAN Vehicle Immobilizer System keys can be used with one vehicle. You should bring all NISSAN Vehicle Immobilizer System keys that you have to a NISSAN dealer for registration. This is because the registration process will erase the memory of all key codes previously registered into the NISSAN Vehicle Immobilizer System. After the registration process, these components will only recognize keys coded into the NISSAN Vehicle Immobilizer System during registration. Any key that is not given to the dealer at the time of registration will no longer be able to start your vehicle.

⚠ CAUTION

Do not allow the immobilizer system key, which contains an electrical transponder, to come into contact with water or salt water. This could affect system function.

When the doors are locked using one of the following methods, the doors cannot be opened using the inside or outside door handles. The doors must be unlocked to open the doors.

⚠ WARNING

- **Always have the doors locked while driving. Along with the use of seat belts, this provides greater safety in the event of an accident by helping to prevent persons from being thrown from the vehicle. This also helps keep children and others from unintentionally opening the doors, and will help keep out intruders.**
- **Before opening any door, always look for and avoid oncoming traffic.**

- **To help avoid risk of injury or death through unintended operation of the vehicle and/or its systems, including entrapment in windows and/or inadvertent door lock activation, do not leave children, people who require the assistance of others and/or pets unattended in your vehicle. Additionally, the temperature inside a closed vehicle on a warm day can quickly become high enough to cause a significant risk of injury or death to people and pets.**

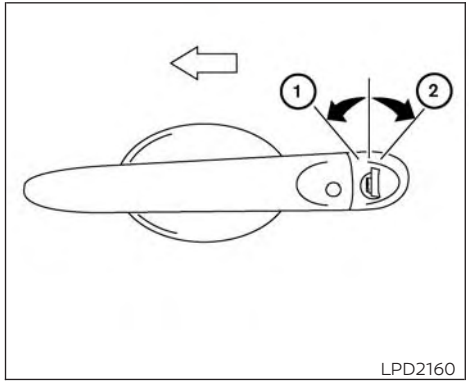

Driver's side

LOCKING WITH KEY

To lock or unlock the vehicle, turn the key as shown.

Manual

To lock a door, turn the key toward the front of the vehicle ①. To unlock, turn the key toward the rear of the vehicle ②.

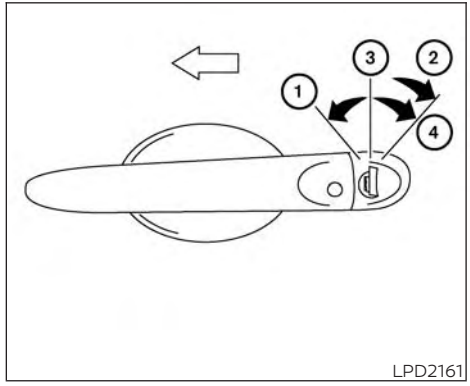

Selective open (if so equipped)

The power door lock system allows you to lock or unlock all doors at the same time.

Turning the key toward the front ① of the vehicle locks all doors.

Turning the key one time toward the rear ② of the vehicle unlocks that door. From that position, returning the key to neutral ③ (where the key can only be removed and inserted) and turning it toward the rear again within 5 seconds unlocks all doors ④.

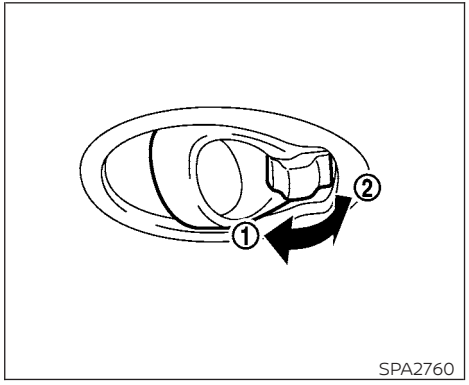

Inside lock

LOCKING WITH INSIDE LOCK KNOB

To lock the door without the key, close the door and move the inside lock knob to the lock position ①.

To unlock the door without the key, move the inside lock knob to the unlock position ②.

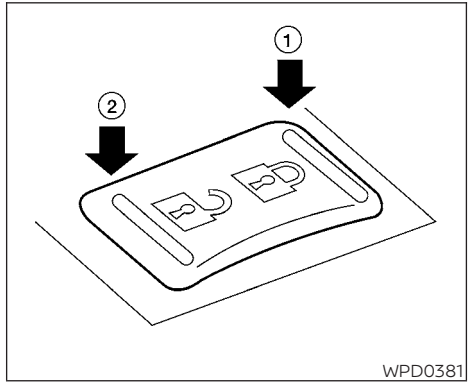

LOCKING WITH POWER DOOR LOCK SWITCH (if so equipped)

To lock all the doors without a key, push the door lock switch (driver's or front passenger's side) to the lock position ①. When locking the door this way, be certain not to leave the key inside the vehicle.

To unlock all the doors without a key, push the door lock switch (driver's or front passenger's side) to the unlock position ②.

Lockout protection

When the power door lock switch is moved to the lock position and any door is open, all doors will lock and unlock automatically. With the Intelligent Key left in the vehicle and any door is open, all doors will unlock automatically and a chime will sound after the door is closed.

These functions help to prevent the Intelligent Key from being accidentally locked inside the vehicle.

AUTOMATIC DOOR LOCKS (if so equipped)

- All doors lock automatically when the vehicle speed reaches 15 mph (24 km/h).
- Continuously Variable Transmission (CVT) (if so equipped)
  - All doors unlock automatically when the transmission is placed in the P (Park) position.
- Manual transmission (if so equipped)
  - All doors unlock automatically when the ignition is placed in the off position.

- Vehicles not equipped with Intelligent Key (if so equipped)
  - All doors unlock automatically when the transmission is placed in the P (Park) position (if so equipped), the ignition is turned to the OFF position or when the key is removed from the ignition.

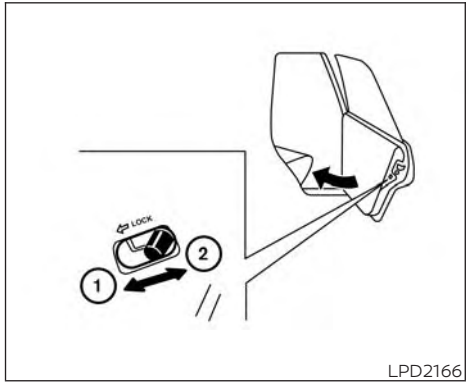

LPD2166

CHILD SAFETY REAR DOOR LOCK

Child safety locks help prevent the rear doors from being opened accidentally, especially when small children are in the vehicle.

The child safety lock levers are located on the edge of the rear doors.

When the lever is in the unlock position ②, the door can be opened from the outside or the inside.

When the lever is in the LOCK position ①, the door can be opened only from the outside.

REMOTE KEYLESS ENTRY SYSTEM (models without NISSAN Intelligent Key®) (if so equipped)

⚠ WARNING

- **Radio waves could adversely affect electric medical equipment. Those who use a pacemaker should contact the electric medical equipment manufacturer for the possible influences before use.**
- **The remote keyless entry key fob transmits radio waves when the buttons are pressed. The FAA advises radio waves may affect aircraft navigation and communication systems. Do not operate the remote keyless entry key fob while on an airplane. Make sure the buttons are not operated unintentionally when the unit is stored for a flight.**

It is possible to lock/unlock all doors, turn the interior lights on, and activate the panic alarm by using the key fob from outside the vehicle.

Be sure to remove the key from the vehicle before locking the doors.

The key fob can operate at a distance of approximately 33 ft (10 m) from the vehicle. The effective distance depends on the conditions around the vehicle.

As many as five key fobs can be used with one vehicle. For information concerning the purchase and use of additional key fobs, it is recommended that you visit a NISSAN dealer.

The key fob will not function when:

- The battery is discharged.
- The distance between the vehicle and the key fob is over 33 ft (10 m).

The panic alarm will not activate when the key is in the ignition switch.

⚠ CAUTION

Listed below are conditions or occurrences which will damage the key fob:

- **Do not allow the key fob, which contains electrical components, to come into contact with water or salt water. This could affect the system function.**
- **Do not drop the key fob.**
- **Do not strike the key fob sharply against another object.**
- **Do not change or modify the key fob.**
- **Wetting may damage the key fob. If the key fob gets wet, immediately wipe until it is completely dry.**
- **Do not place the key fob for an extended period in an area where temperatures exceed 140°F (60°C).**
- **Do not attach the key fob with a key holder that contains a magnet.**
- **Do not place the key fob near equipment that produces a magnetic field, such as a TV, audio equipment and personal computers.**

If a key fob is lost or stolen, NISSAN recommends erasing the ID code of that key fob. This will prevent the key fob from unauthorized use to unlock the vehicle. For information regarding the erasing procedure, it is recommended that you visit a NISSAN dealer.

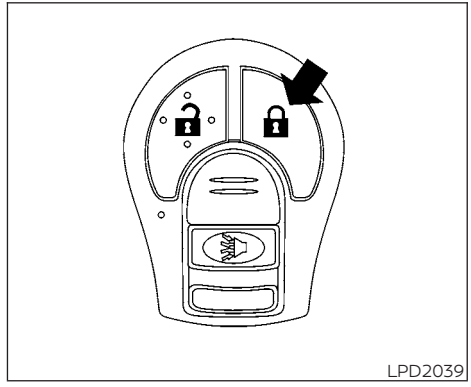
LPD2039

HOW TO USE REMOTE KEYLESS ENTRY SYSTEM

Locking doors

1. Close all windows.
2. Remove the key from the ignition switch.
3. Close all doors and the rear hatch.

4. Press the button on the key fob. All the doors lock. The hazard warning lights flash twice and the horn beeps once to indicate all doors are locked.
   - When the button is pressed with all doors locked, the hazard warning lights flash twice and the horn beeps once as a reminder that the doors are already locked.
   - If a door is open and you press the button, the doors will lock but the horn will not beep and the hazard lights will not flash.

The horn may or may not beep. For additional information, refer to "Silencing the horn beep feature" in this section.

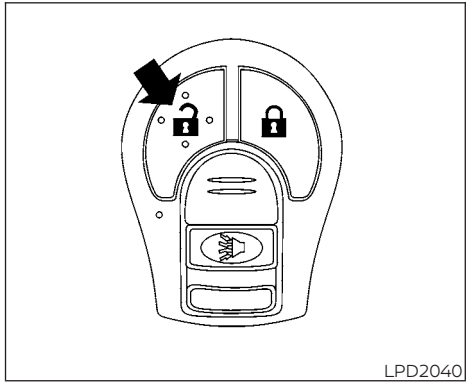

Unlocking doors

Press the button on the key fob once.

- Only the driver's door unlocks.
- The hazard warning lights flash once if all doors are completely closed with the ignition switch in any position except the ON position.
- The interior light turns on and the light timer activates for a period of time when the interior light switch is in the DOOR position with the ignition switch in any position except the ON position.

Press the button on the key fob again within 5 seconds.

- All doors and the rear hatch unlock.
- The hazard warning lights flash once if all doors are completely closed.

The interior lights can be turned off without waiting by inserting the key into the ignition switch and placing the ignition in the ON or START (if so equipped) position, locking the doors with the key fob or pushing the interior light switch to the OFF position.

Auto relock

When the button on the key fob is pressed, all doors will lock automatically within 1 minute unless one of the following operations is performed:

- Any door is opened.
- The ignition is placed in the ON or START (if so equipped) position.

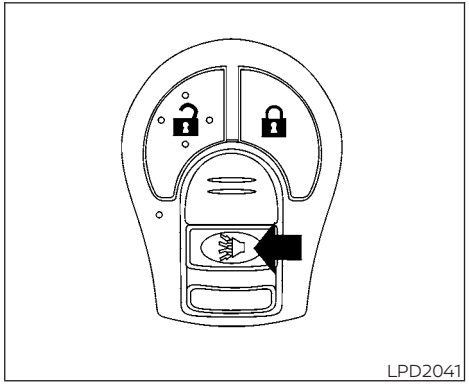

LPD2041

Using the panic alarm

If you are near your vehicle and feel threatened, you may activate the panic alarm to call attention by pressing and holding the button on the key fob for **longer than 0.5 seconds.**

The panic alarm and headlights will stay on for a period of time.

The panic alarm stops when:

- It has run for a period of time.
- Any button is pressed on the key fob.

Using the interior light (if so equipped)

Press the button on the key fob once to turn on the interior lights.

For additional information, refer to "Interior lights" in the "Instruments and controls" section of this manual.

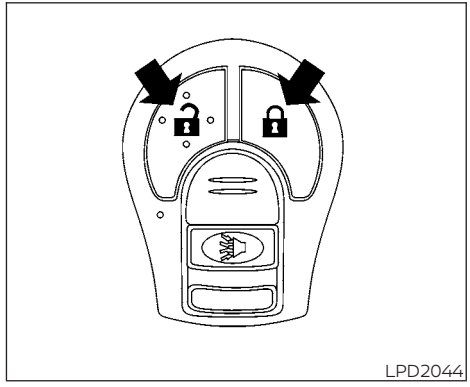

LPD2044

Silencing the horn beep feature

If desired, the horn beep feature can be deactivated using the key fob.

To deactivate: Press and hold the and buttons **for at least 2 seconds.**

The hazard warning lights will flash three times to confirm that the horn beep feature has been deactivated.

To activate: Press and hold the and buttons **for at least 2 seconds once more.**

The hazard warning lights will flash once and the horn will sound once to confirm that the horn beep feature has been reactivated.

Deactivating the horn beep feature does not silence the horn if the alarm is triggered.

NISSAN INTELLIGENT KEY® (if so equipped)

⚠ WARNING

- **Radio waves could adversely affect electric medical equipment. Those who use a pacemaker should contact the electric medical equipment manufacturer for the possible influences before use.**
- **The Intelligent Key transmits radio waves when the buttons are pressed. The FAA advises the radio waves may affect aircraft navigation and communication systems. Do not operate the Intelligent Key while on an airplane. Make sure the buttons are not operated unintentionally when the unit is stored for a flight.**

The Intelligent Key can operate all the door locks using the remote control function or pushing the request switch on the vehicle without taking the key out from a pocket or purse. The operating environment and/or conditions may affect the Intelligent Key operation.

Be sure to read the following before using the Intelligent Key.

⚠ CAUTION

- **Be sure to carry the Intelligent Key with you when operating the vehicle.**
- **Never leave the Intelligent Key in the vehicle when you leave the vehicle.**

The Intelligent Key is always communicating with the vehicle as it receives radio waves. The Intelligent Key transmits weak radio waves. Environmental conditions may interfere with the operation of the Intelligent Key under the following operating conditions:

- When operating near a location where strong radio waves are transmitted, such as a TV tower, power station and broadcasting station.
- When in possession of wireless equipment, such as a cellular telephone, transceiver, or a CB radio.
- When the Intelligent Key is in contact with or covered by metallic materials.
- When any type of radio wave remote control is used nearby.
- When the Intelligent Key is placed near an electric appliance such as a personal computer.

- When the vehicle is parked near a parking meter.

In such cases, correct the operating conditions before using the Intelligent Key function or use the mechanical key.

Although the life of the battery varies depending on the operating conditions, the battery's life is approximately two years. If the battery is discharged, replace it with a new one.

When the Intelligent Key battery is low, the Intelligent Key system warning light (KEY) will blink green for about 30 seconds after the ignition switch is placed in the ON position.
Since the Intelligent Key is continuously receiving radio waves, if the key is left near equipment which transmits strong radio waves, such as signals from a TV and personal computer, the battery life may become shorter.

When the battery is discharged, firmly apply the foot brake and touch the ignition switch with the Intelligent Key. Then push the ignition switch while depressing the brake pedal within 10 seconds after the chime sound. For additional information, refer to "Push-button ignition switch" in the "Starting and driving" section of this manual.

For additional information, refer to "Battery replacement" in the "Do-it-yourself" section of this manual.

As many as four Intelligent Keys can be registered and used with one vehicle. For information about the purchase and use of additional Intelligent Keys, it is recommended that you visit a NISSAN dealer.

⚠ CAUTION

Listed below are conditions or occurrences which will damage the Intelligent Key:

- **Do not allow the Intelligent Key, which contains electrical components, to come into contact with water or salt water. This could affect the system function.**
- **Do not drop the Intelligent Key.**
- **Do not strike the Intelligent Key sharply against another object.**
- **Do not change or modify the Intelligent Key.**
- **Wetting may damage the Intelligent Key. If the Intelligent Key gets wet, immediately wipe until it is completely dry.**
- **If the outside temperature is below 14°F (-10°C) the battery of the Intelligent Key may not function properly.**
- **Do not place the Intelligent Key for an extended period in an area where temperatures exceed 140°F (60°C).**
- **Do not attach the Intelligent Key with a key holder that contains a magnet.**
- **Do not place the Intelligent Key near equipment that produces a magnetic field, such as a TV, audio equipment and personal computers.**

If an Intelligent Key is lost or stolen, NISSAN recommends erasing the ID code of that Intelligent Key from the vehicle. This may prevent the unauthorized use of the Intelligent Key to operate the vehicle. For information regarding the erasing procedure, it is recommended that you visit a NISSAN dealer.

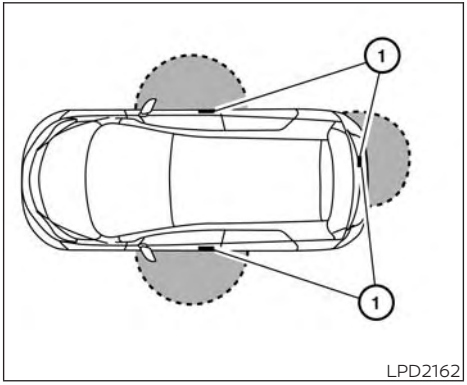

LPD2162

OPERATING RANGE

The Intelligent Key functions can only be used when the Intelligent Key is within the specified operating range from the request switch ①.

When the Intelligent Key battery is discharged or strong radio waves are present near the operating location, the Intelligent Key operating range becomes narrower, and the Intelligent Key may not function properly.

The operating range is within 31.50 in (80 cm) from each request switch ①.

If the Intelligent Key is too close to the door glass, handle or rear bumper, the request switches may not function.

When the Intelligent Key is within the operating range, it is possible for anyone, even someone who does not carry the Intelligent Key, to push the request switch to lock/unlock the doors.

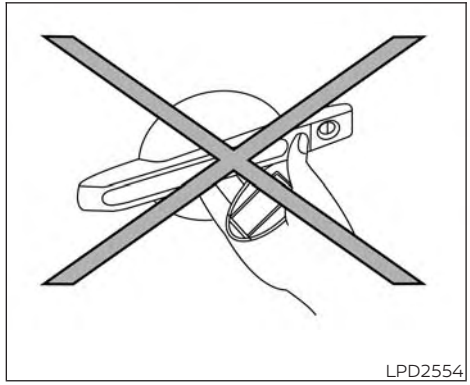
LPD2554

DOOR LOCKS/UNLOCKS PRECAUTION

- Do not push the door handle request switch with the Intelligent Key held in your hand as illustrated. The close distance to the door handle will cause the Intelligent Key system to have difficulty recognizing that the Intelligent Key is outside the vehicle.
- After locking with the door handle request switch, verify the doors are securely locked by testing them.

- To prevent the Intelligent Key from being left inside the vehicle, make sure you carry the Intelligent Key with you and then lock the doors.
- Do not pull the door handle before pushing the door handle request switch. The door will be unlocked but will not open. Release the door handle once and pull it again to open the door.

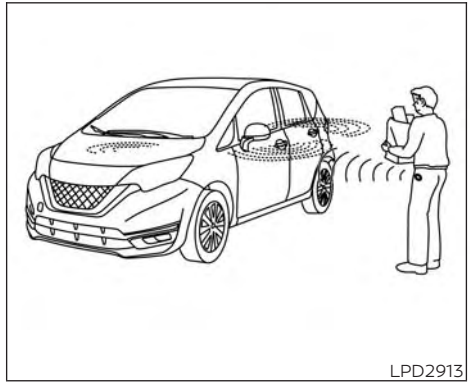
LPD2913

NISSAN INTELLIGENT KEY® OPERATION

You can lock or unlock the doors without taking the key out of your pocket or bag.

When you carry the Intelligent Key with you, you can lock or unlock all doors by pushing the door handle request switch or rear hatch request switch within the range of operation.

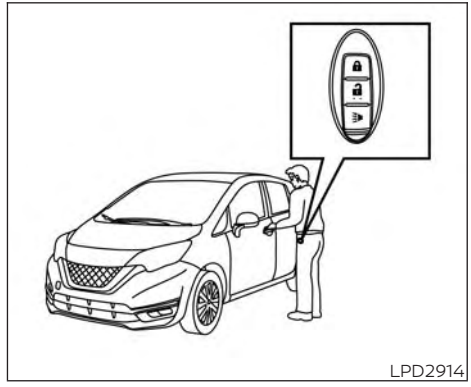
LPD2914

Locking doors

1. Place the ignition switch to the LOCK position.
2. Close all doors and the rear hatch.
3. Push any door handle request switch ① or the rear hatch request switch ② while carrying the Intelligent Key with you.
4. All doors and the rear hatch will lock.
5. The hazard warning lights flash twice and the horn beeps once.

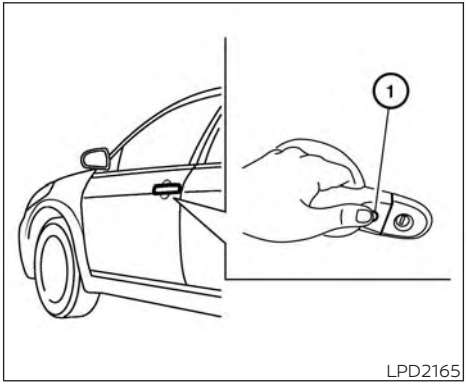

LPD2165

NOTE:

- **Doors lock with the door handle request switch or rear hatch request switch while the ignition switch is pushed in.**
- **Doors lock with the door handle request switch or the rear hatch request switch while the ignition switch is not in the LOCK position.**

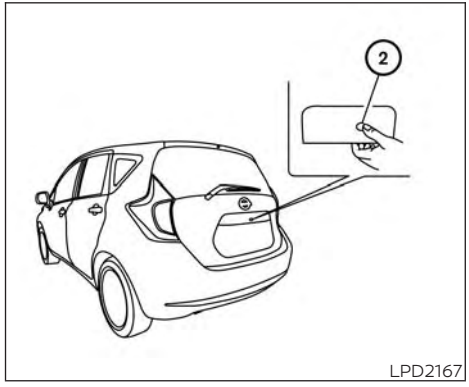

LPD2167

- **Doors do not lock with the door handle request switch or the rear hatch request switch with the Intelligent Key inside the vehicle and a beep sounds to warn you. However, when an Intelligent Key is inside the vehicle, doors can be locked with another Intelligent Key.**

⚠ CAUTION

- **After locking the doors using the request switch, make sure that the doors have been securely locked by operating the door handles or the rear hatch opener switch.**
- **When locking the doors using the request switch, make sure to have the Intelligent Key in your possession before operating the request switch to prevent the Intelligent Key from being left in the vehicle.**
- **The request switch is operational only when the Intelligent Key has been detected by the Intelligent Key system.**

Lockout protection

To prevent the Intelligent Key from being accidentally locked inside the vehicle, lockout protection is equipped with the Intelligent Key.

When the driver's side door is open, the doors are locked, and then the Intelligent Key is put inside the vehicle and all the doors are closed; the lock will automatically unlock and the door chime sounds.

NOTE:

The doors may not lock when the Intelligent Key is in the same hand that is operating the request switch to lock the door. Put the Intelligent Key in a purse, pocket or your other hand.

⚠ CAUTION

The lockout protection may not function under the following conditions:

- **When the Intelligent Key is placed on top of the instrument panel.**
- **When the Intelligent Key is placed on top of the rear parcel shelf.**
- **When the Intelligent Key is placed on the cargo cover.**
- **When the Intelligent Key is placed inside the glove box or a storage bin.**
- **When the Intelligent Key is placed inside the door pockets.**
- **When the Intelligent Key is placed on or under the spare tire area.**
- **When the Intelligent Key is placed inside or near metallic materials.**

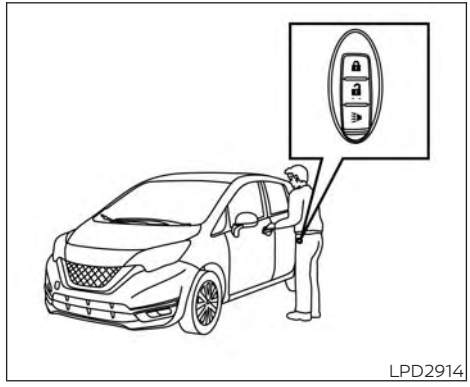
LPD2914

Unlocking doors

1. Carry the Intelligent Key.

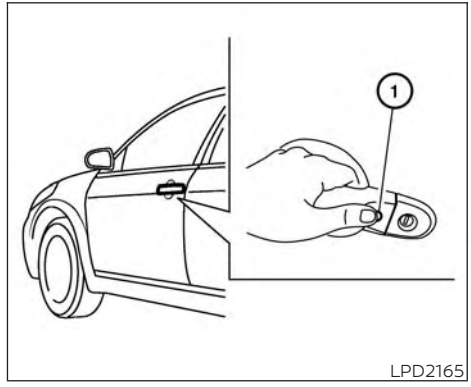

LPD2165

2. Push the door handle request switch ① or the rear hatch request switch ②.
3. The hazard warning lights flash once and the horn beeps once.
4. Push the door handle request switch ① again within 1 minute to unlock all doors and the rear hatch.

If a door handle is pulled while unlocking the doors, that door may not be unlocked. Returning the door handle to its original position will unlock the door. If the door does not unlock after returning the door handle, push the door handle request switch to unlock the door.

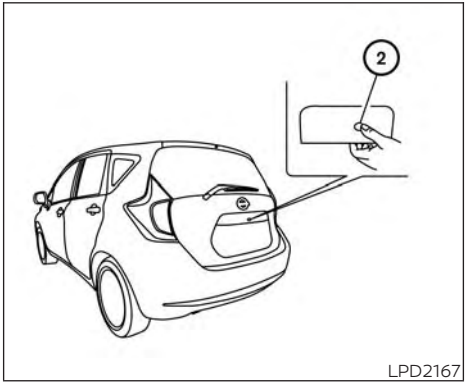

All doors and the rear hatch will be locked automatically unless one of the following operations is performed within 1 minute after pushing the request switch.

- Opening any doors or the rear hatch.
- Engaging the ignition switch from the locked position.

The interior light illuminates for a period of time when a door is unlocked and the room light switch is in the DOOR position.

The interior light can be turned off without waiting by performing one of the following operations.

- Placing the ignition switch to the ON position.
- Locking the doors with the remote control.
- Switching the room light switch to the OFF position.

HOW TO USE THE REMOTE KEYLESS ENTRY FUNCTION

The remote keyless entry function can operate all door locks using the remote keyless function of the Intelligent Key. The remote keyless function can operate at a distance of 33 ft (10 m) away from the vehicle. The operating distance depends upon the conditions around the vehicle.

The remote keyless entry function may not function under the following conditions:

- When the Intelligent Key is not within the operational range.
- When the doors or the rear hatch are open or not closed securely.
- When the Intelligent Key battery is low or discharged.

⚠ CAUTION

When locking the doors using the Intelligent Key, be sure not to leave the key in the vehicle.

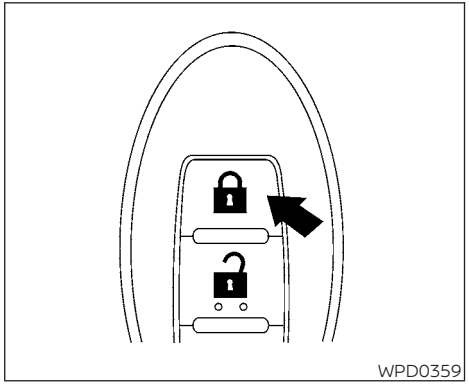

Locking doors

1. Place the ignition switch in the LOCK position.
2. Close all doors and the rear hatch.
3. Press the button on the Intelligent Key.
4. The hazard warning lights flash twice and the horn beeps once.
5. All doors and the rear hatch will be locked.

CAUTION

After locking the doors using the Intelligent Key, be sure that the doors have been securely locked by operating the door handles.

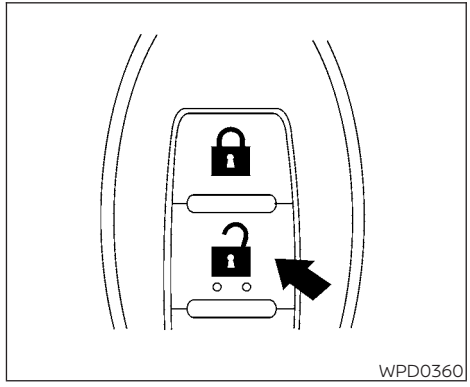

Unlocking doors

1. Press the button on the Intelligent Key.
2. The hazard warning lights flash once.
3. Press the button again within 1 minute to unlock all doors and the rear hatch.

All doors and the rear hatch will be locked automatically unless one of the following operations is performed within 1 minute after pressing the button.

- Opening any doors or the rear hatch.
- Engaging the ignition switch from the lock position.

The interior light illuminates for a period of time when a door is unlocked and the room light switch is in the DOOR position.

The light can be turned off without waiting by performing one of the following operations.

- Placing the ignition switch in the ACC or ON position.
- Locking the doors with the remote control.
- Switching the room light switch in the OFF position.

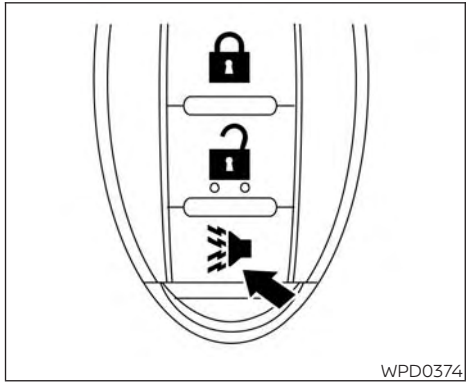

Using the panic alarm

If you are near your vehicle and feel threatened, you may activate the panic alarm to call attention by pressing and holding the button on the Intelligent Key for **longer than 0.5 seconds.**

The panic alarm and headlights will stay on for a period of time.

The panic alarm stops when:

- It has run for a period of time, or
- Any button is pressed on the Intelligent Key.
- The request switch on the driver or passenger door or rear hatch has been pushed and the Intelligent Key is in range of the door handle.

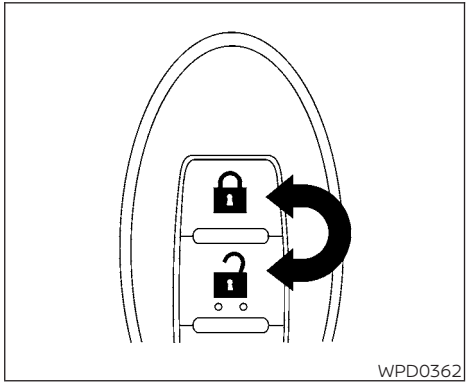

Silencing the horn beep feature

If desired, the horn beep feature can be deactivated using the Intelligent Key.

To deactivate: Press and hold the and buttons **for at least 2 seconds.** The hazard warning lights will flash three times to confirm that the horn beep feature has been deactivated.

To activate: Press and hold the and buttons **for at least 2 seconds once more.**

The hazard warning lights will flash once and the horn will sound once to confirm that the horn beep feature has been reactivated.

Deactivating the horn beep feature does not silence the horn if the alarm is triggered.

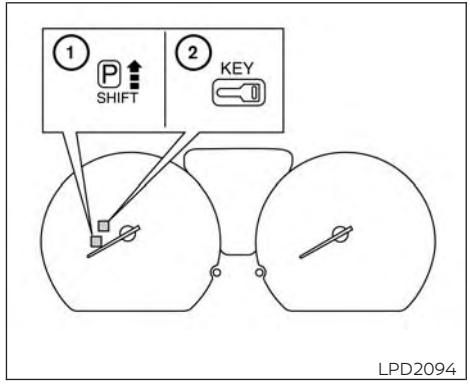

Type A (if so equipped)

① P (Park) position selecting warning light (if so equipped)

② NISSAN Intelligent Key® warning light

WARNING LIGHTS AND AUDIBLE REMINDERS

The Intelligent Key is equipped with a function that is designed to minimize improper operations and to help prevent the vehicle from being stolen. The warning chime sounds and the warning light illuminates when improper operations are detected.

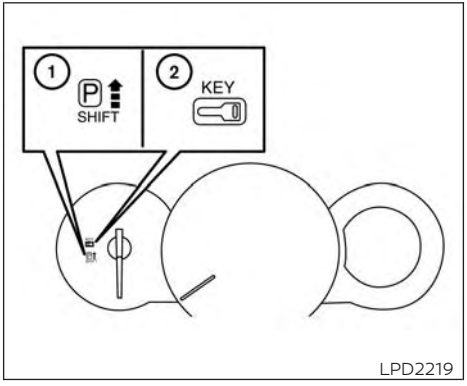

Type B (if so equipped)

① P (Park) position selecting warning light (if so equipped)

② NISSAN Intelligent Key® warning light

⚠ CAUTION

When the buzzer sounds and the warning light illuminates, be sure to check both the vehicle and the Intelligent Key.

WARNING SIGNALS

To help prevent the vehicle from moving unexpectedly by erroneous operation of the Intelligent Key or to help prevent the vehicle from being stolen, a chime or buzzer sounds from inside and outside the vehicle and a warning is displayed in the instrument panel.

When a chime or beep sounds or a warning is displayed, be sure to check the vehicle and the Intelligent Key.

For additional information, refer to the "Troubleshooting guide" in this section and "Warning lights, indicator lights and audible reminders" in the "Instruments and controls" section of this manual.

Audible reminder and warning when locking the doors

When the chime or buzzer sounds from inside and outside the vehicle, check for the following:

- The ignition switch is placed in the LOCK position.
- The Intelligent Key is not left inside the vehicle.
- The shift lever is in the P (Park) (Continuously Variable Transmission models) or N (Neutral) (manual transmission models) position with the parking brake fully applied.

Audible reminder and warning when the engine stops

When the P (Park) position selecting warning light (P SHIFT) (if so equipped) in the instrument panel illuminates red:

- Make sure the shift lever is in the P (Park) (Continuously Variable Transmission models) or N (Neutral) (manual transmission models) position with the parking brake fully applied.

When the chime sounds intermittently:

- Make sure the shift lever is in the P (Park) (Continuously Variable Transmission models) or N (Neutral) (manual transmission models) position with the parking brake fully applied and the ignition switch is placed in the LOCK position.

If the chime sounds continuously when the driver's door is opened, check the following:

- The shift lever is placed in the P (Park) (Continuously Variable Transmission models) or N (Neutral) (manual transmission models) position with the parking brake fully applied and the ignition switch is placed in the LOCK position.
- The warning chime may stop when one of the following is performed:
  - Returning the ignition switch to the LOCK position.
  - Closing the doors.

Alarm and warning when the engine starts

When the Intelligent Key system warning light (KEY) is yellow and the outside buzzer sounds, make sure the Intelligent Key is inside the vehicle.

Warning for low battery power

When the Intelligent Key battery is low, the Intelligent Key system warning light (KEY) will blink green for about 30 seconds after the ignition switch is placed in the ON position. This warning is to let you know that the battery of the Intelligent Key will run down soon. Replace it with a new one. For additional information, refer to "Battery replacement" in the "Do-it-yourself" section of this manual.

It is recommended that you visit a NISSAN dealer for battery replacement.

Preventing the Intelligent Key from being left in the vehicle

If you lock all doors using the power door lock switch with the Intelligent Key in the vehicle, all of the doors unlock immediately and the buzzer will warn you when the door is closed.

TROUBLESHOOTING GUIDE (Continuously Variable Transmission only)

Symptom		Possible Cause	Remedy
When pushing the ignition switch to stop the engine	The P (Park) warning light in the instrument panel illuminates and the inside chime sounds continuously.	The shift lever is not in the P (Park) position.	Make sure that the shift lever is in the P (Park) position.
When opening the driver's door	A warning chime sounds continuously.	The ignition switch is in the ACC position.	Place the ignition switch in the OFF position.
When pushing the door handle request switch to lock the door	The outside chime sounds for a few seconds.	The Intelligent Key is inside the vehicle.	Be sure to carry the Intelligent Key with you.
When closing the doors	The P (Park) warning light in the instrument panel illuminates and the outside chime sounds continuously.	The ignition switch is in the ACC or OFF position and the shift lever is not in the P (Park) position.	Make sure that the shift lever is in the P (Park) position and place the ignition switch in the OFF position.
	The outside chime sounds for approximately 3 seconds and all doors unlock.	The Intelligent Key is in the vehicle.	Be sure to carry the Intelligent Key with you.
When pressing the 1 button on the Intelligent Key to the lock the door	The outside chime sounds for a few seconds and all the doors unlock.	The Intelligent Key is inside the vehicle.	Be sure to carry the Intelligent Key with you.

TROUBLESHOOTING GUIDE
(manual transmission only)

Symptom		Possible Cause	Remedy
When the parking brake is fully applied	The inside warning chime sounds continuously.	The ignition switch is in the ACC or ON position.	Place the ignition switch in the OFF position.
When opening the driver's door	A warning chime sounds continuously.	The ignition switch is in the ON position.	Place the ignition switch in the OFF position.
When pushing the door handle request switch to lock the door	The outside chime sounds for a few seconds.	The Intelligent Key is inside the vehicle.	Be sure to carry the Intelligent Key with you.
When closing the doors	The key warning light in the instrument panel blinks in yellow, the outside chime sounds three times and the inside warning chime sounds for approximately 3 seconds.	The ignition switch is in the ACC position.	Place the ignition switch in the OFF position.
	The outside chime sounds for approximately 3 seconds and all doors unlock.	The Intelligent Key is in the vehicle.	Be sure to carry the Intelligent Key with you.
When pushing the ignition switch to start the engine	The key warning light in the instrument panel blinks in green.	The battery charge is low.	Replace the battery with a new one. For additional information, refer to "Battery replacement" in the "Do-it-yourself" section of this manual.

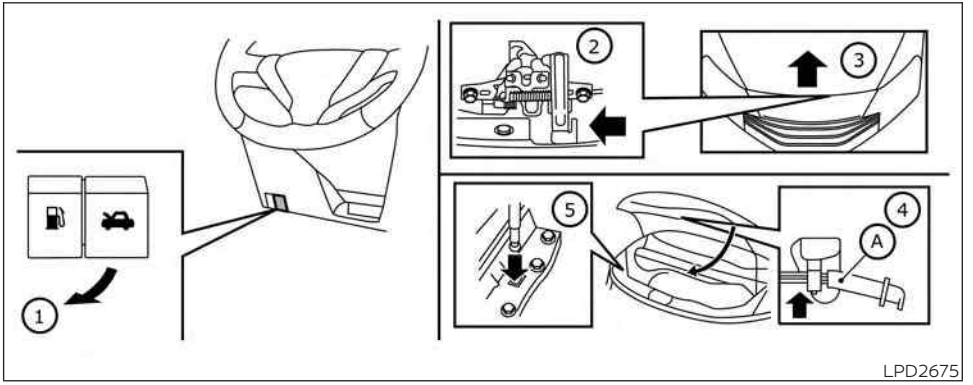

1. Pull the hood lock release handle ① located below the instrument panel until the hood springs up slightly.
2. Locate the lever ② in between the hood and grille and push the lever sideways with your fingertips.
3. Raise the hood ③.
4. Remove the support rod ④ and insert it into the slot ⑤.

Hold the coated parts Ⓐ when removing or resetting the support rod. Avoid direct contact with the metal parts, as they may be hot immediately after the engine has been stopped.

When closing the hood, return the support rod to its original position, lower the hood to approximately 12 in (30 cm) above the latch and release it. This allows proper engagement of the hood latch.

⚠ WARNING

- **Make sure the hood is completely closed and latched before driving. Failure to do so could cause the hood to fly open and result in an accident.**
- **If you see steam or smoke coming from the engine compartment, to avoid injury do not open the hood.**

⚠ WARNING

The rear hatch must be closed securely before driving. An open rear hatch could allow dangerous exhaust gases to be drawn inside the vehicle. For additional information, refer to "Exhaust gas (carbon monoxide)" in the "Starting and driving" section of this manual.

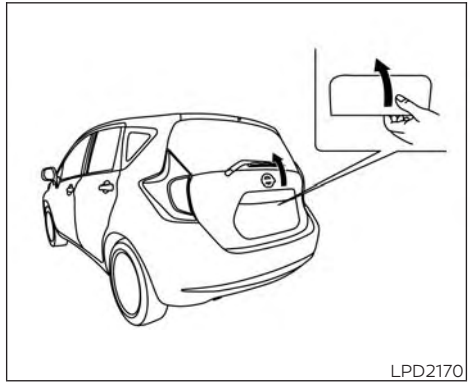

OPENING THE REAR HATCH

To open the rear hatch, unlock it with one of the following operations, then pull the handle.

- Push the power door lock switch to the unlock position.
- Unlock all doors using the key.
- Press the 🔓 button on the key fob (if so equipped) twice. For additional information, refer to "Remote keyless entry system (models without NISSAN Intelligent Key®)" in this section.
- Push the rear hatch request switch or door handle request switch (if so equipped) twice. For additional information, refer to "NISSAN Intelligent Key®" in this section.
- Press the 🔓 button on the Intelligent Key (if so equipped) twice. For additional information, refer to "NISSAN Intelligent Key®" in this section.

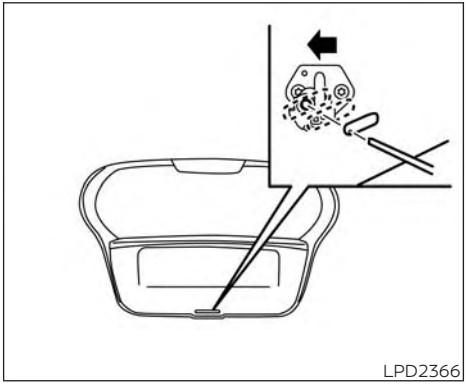
LPD2366

REAR HATCH RELEASE

The rear hatch release mechanism allows the rear hatch to be opened in the event of a discharged battery.

To release the rear hatch from the inside of the vehicle, perform the following operations:

1. Fold the rear seats down. For additional information, refer to "Folding rear seat" in the "Safety—Seats, seat belts and supplemental restraint system" section of this manual.
2. Insert a suitable tool in the access opening. Move the release lever to the left (passenger side). The rear hatch will be unlatched.
3. Use the exterior rear hatch handle to open.

NOTE:

If you had to open the rear hatch using this lever, have your vehicle checked. It is recommended that you visit a NISSAN dealer for this service as soon as possible.

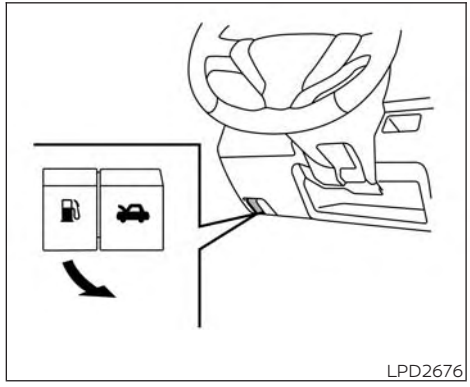
LPD2676

OPENER OPERATION

The fuel-filler door release is located below the instrument panel. To open the fuel-filler door, pull the release. To lock, close the fuel-filler door securely.

FUEL-FILLER CAP

⚠ WARNING

- **Gasoline is extremely flammable and highly explosive under certain conditions. You could be burned or seriously injured if it is misused or mishandled. Always stop the engine and do not smoke or allow open flames or sparks near the vehicle when refueling.**
- **Do not attempt to top off the fuel tank after the fuel pump nozzle shuts off automatically. Continued refueling may cause fuel overflow, resulting in fuel spray and possibly a fire.**
- **Use only an original equipment type fuel-filler cap as a replacement. It has a built-in safety valve needed for proper operation of the fuel system and emission control system. An incorrect cap can result in a serious malfunction and possible injury. It could also cause the Malfunction Indicator Light (MIL) to come on.**
- **Never pour fuel into the throttle body to attempt to start your vehicle.**
- **Do not fill a portable fuel container in the vehicle or trailer. Static electricity can cause an explosion of flammable liquid, vapor or gas in any vehicle or trailer. To reduce the risk of serious injury or death when filling portable fuel containers:**
  - **Always place the container on the ground when filling.**
  - **Do not use electronic devices when filling.**
  - **Keep the pump nozzle in contact with the container while you are filling it.**
  - **Use only approved portable fuel containers for flammable liquid.**

⚠ CAUTION

- **Do not use a fuel containing more than 15% ethanol in your vehicle. For additional information, refer to "Fuel recommendation" in the "Technical and consumer information" section of this manual.**
- **The LOOSE FUEL CAP warning message will be displayed/warning will appear if the fuel-filler cap is not properly tightened. It may take a few driving trips for the message to be displayed. Failure to tighten the fuel-filler cap properly after the LOOSE FUEL CAP warning message is displayed/warning appears may cause the Malfunction Indicator Light (MIL) to illuminate.**
- **Failure to tighten the fuel-filler cap properly may cause the Malfunction Indicator Light (MIL) to illuminate. If the light illuminates because the fuel-filler cap is loose or missing, tighten or install the cap and continue to drive the vehicle. The light should turn off after a few driving trips. If the light does not turn off after a few driving trips, have the vehicle inspected. It is recommended that you visit a NISSAN dealer for this service.**
- **For additional information, refer to "Malfunction Indicator Light (MIL)" in the "Instruments and controls" section of this manual.**

- **If fuel is spilled on the vehicle body, flush it away with water to avoid paint damage.**

NOTE:

Changing ignition switch status during the refueling process may cause a delay in fuel gauge response.

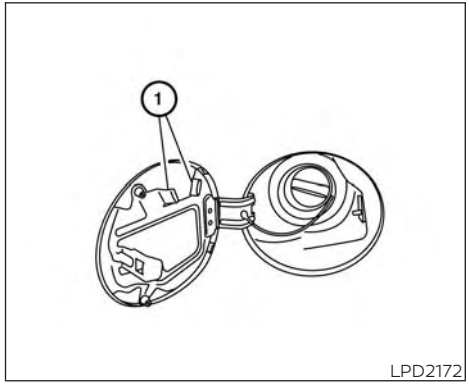

LPD2172

To remove the fuel-filler cap:

1. Turn the fuel-filler cap counterclockwise to remove.
2. Put the fuel-filler cap on the cap holder ① while refueling.

To install the fuel-filler cap:

1. Insert the fuel-filler cap straight into the fuel-filler tube.
2. Turn the fuel-filler cap clockwise until click is heard.

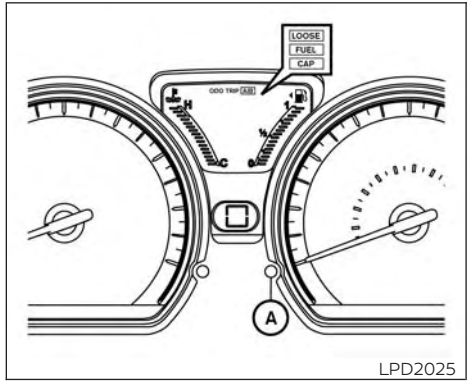

LPD2025

Type A (if so equipped)

LOOSE FUEL CAP warning message

The LOOSE FUEL CAP warning will appear in the trip computer when the fuel-filler cap is not tightened correctly after the vehicle has been refueled. It may take a few driving trips for the message to be displayed. To turn off the warning message, perform the following:

1. Remove and install the fuel-filler cap as previously described as soon as possible.

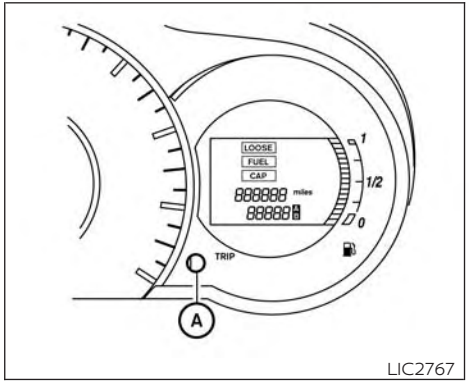

LIC2767

Type B (if so equipped)

2. Tighten the fuel-filler cap until click is heard.
3. Press the loose fuel cap warning reset button Ⓐ in the meter for about 1 second to turn off the LOOSE FUEL CAP warning after tightening the fuel-filler cap.

STEERING WHEEL

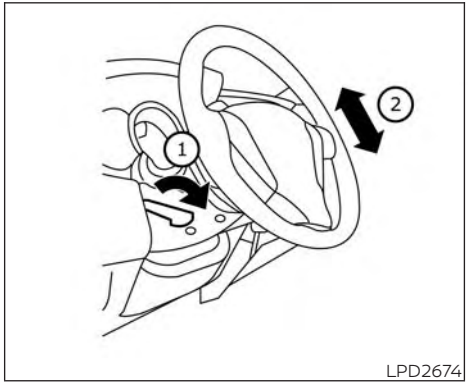

LPD2674

TILT OPERATION

Push the lock lever ① down and adjust the steering wheel up or down ② to the desired position.

Pull the lock lever ① up to lock the steering wheel in place.

⚠ WARNING

Do not adjust the steering wheel while driving. You could lose control of your vehicle and cause an accident.

SUN VISORS

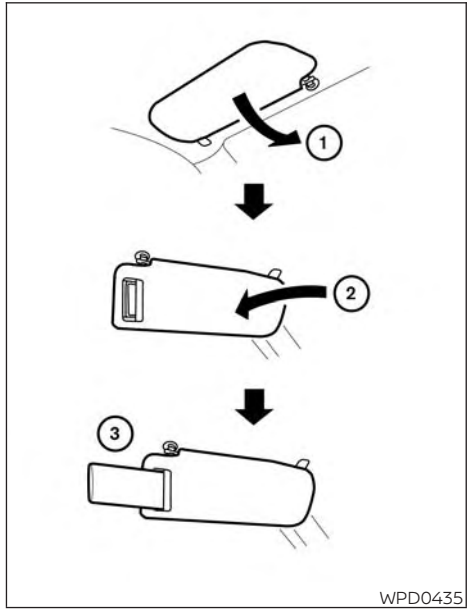

WPD0435

1. To block glare from the front, swing down the sun visor ①.
2. To block glare from the side, remove the sun visor from the center mount and swing the visor to the side ②.

3. Slide the extension ③ sun visor (if so equipped) in or out as needed.

⚠ CAUTION

- **Do not store the sun visor before returning the extension to its original position.**
- **Do not pull the extension sun visor forcibly downward.**

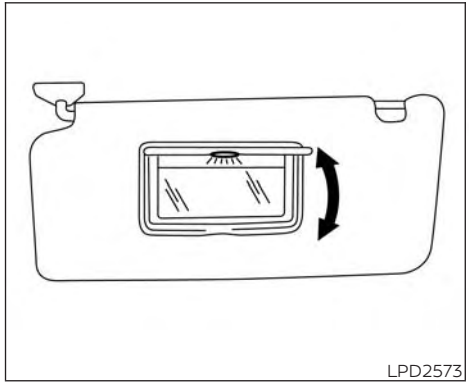

VANITY MIRRORS (if so equipped)

To access the vanity mirror, pull the sun visor down and flip open the mirror cover. Some vanity mirrors are illuminated and turn on when the mirror cover is open.

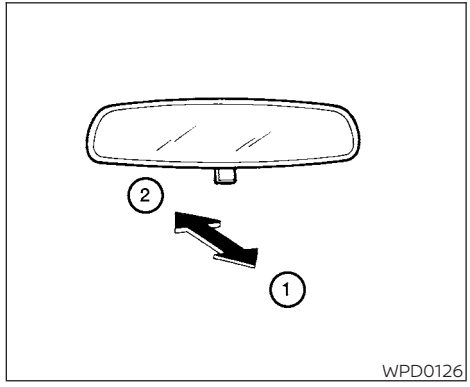

REARVIEW MIRROR

The night position ① reduces glare from the headlights of vehicles behind you at night.

Use the day position ② when driving in daylight hours.

⚠ WARNING

Use the night position only when necessary, because it reduces rear view clarity.

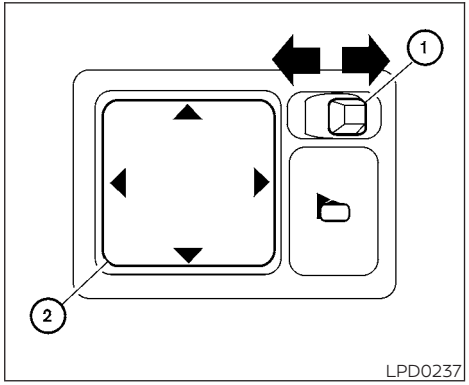

OUTSIDE MIRRORS

⚠ WARNING

- **Do not adjust the mirrors while driving. You could lose control of your vehicle and cause an accident.**
- **Objects viewed in the outside mirror on the passenger side are closer than they appear. Be careful when moving to the right. Using only this mirror could cause an accident. Use the inside mirror or glance over your shoulder to properly judge distances to other objects.**

The outside mirror remote control only operates when the ignition switch is placed in the ACC or ON position.

Move the small switch ① to select the right or left mirror. Adjust each mirror to the desired position using the large switch ②. Move the small switch ① to the center (neutral) position to prevent accidentally moving the mirror.

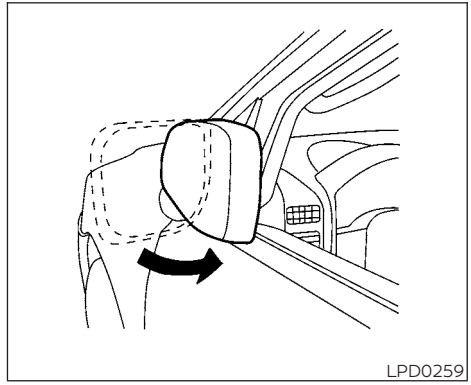

Manual folding outside mirrors

Pull the outside mirror toward the door to fold it.

Heated mirrors (if so equipped)

Some outside mirrors can be heated to defrost, defog, or de-ice for improved visibility. For additional information, refer to "Rear window and outside mirror defroster switch" in the "Instruments and controls" section of this manual.

4 Monitor, climate, audio, phone and voice recognition systems

NissanConnect® Owner's Manual (if so equipped) 4-2
Control panel buttons 4-3
How to use the touch-screen 4-3
How to use the MENU button 4-5
(brightness control) button 4-7
How to use the VOL (volume) knob / PUSH (power) button 4-7
Selecting menu from launch bar 4-7
RearView Monitor (if so equipped) 4-8
RearView Monitor system operation 4-9
How to read the displayed lines 4-10
Difference between predicted and actual distances 4-10
Adjusting the screen 4-12
RearView Monitor system limitations 4-13
System maintenance 4-14
Vents 4-14
Heater and air conditioner (manual) 4-15
Controls 4-16
Heater operation 4-17
Air conditioner operation 4-18
Air flow charts 4-19
Servicing air conditioner 4-23
Audio system 4-23
Radio 4-23
FM radio reception 4-23
AM radio reception 4-24
Audio operation precautions 4-24
FM/AM radio 4-26
USB (Universal Serial Bus) connection port 4-31
iPod®* player operation 4-34
Bluetooth® streaming audio 4-37
Steering Wheel Switch for audio control 4-41
Antenna 4-42
Siri® Eyes Free 4-42
Requirements 4-43
Operating Siri® Eyes Free 4-43
Troubleshooting guide 4-45
Car phone or CB radio 4-46
Bluetooth® Hands-Free Phone System 4-46
Regulatory information 4-48
Using the system 4-49
Indicators 4-50
Control buttons 4-51

Connecting procedure 4-52
Voice commands 4-53
Phone display screen. 4-55
Making a call 4-56
Receiving a call 4-57
During a call 4-57
Ending a call. 4-57
Text messaging (if so equipped) 4-58
Bluetooth® connections screen 4-61
Phone and text message settings 4-62

NISSANCONNECT® OWNER'S MANUAL (if so equipped)

Refer to the NissanConnect® Owner's Manual that includes the following information.

- NissanConnect® Services
- Audio system
- Apple CarPlay™
- Android Auto™
- Bluetooth® Hands-Free Phone system
- Viewing information
- Other settings
- Voice Recognition
- General system information

⚠ WARNING

- **Positioning of the heating or air conditioning controls and display controls should not be done while driving in order that full attention may be given to the driving operation.**
- **Do not disassemble or modify this system. If you do, it may result in accidents, fire, or electrical shock.**
- **Do not use this system if you notice any abnormality, such as a frozen screen or lack of sound. Continued use of the system may result in accident, fire or electric shock.**
- **In case you notice any foreign object in the system hardware, spill liquid on it, or notice smoke or smell coming from it, stop using the system immediately. Ignoring such conditions may lead to accidents, fire or electrical shock. It is recommended that you visit a NISSAN dealer for servicing.**

CONTROL PANEL BUTTONS

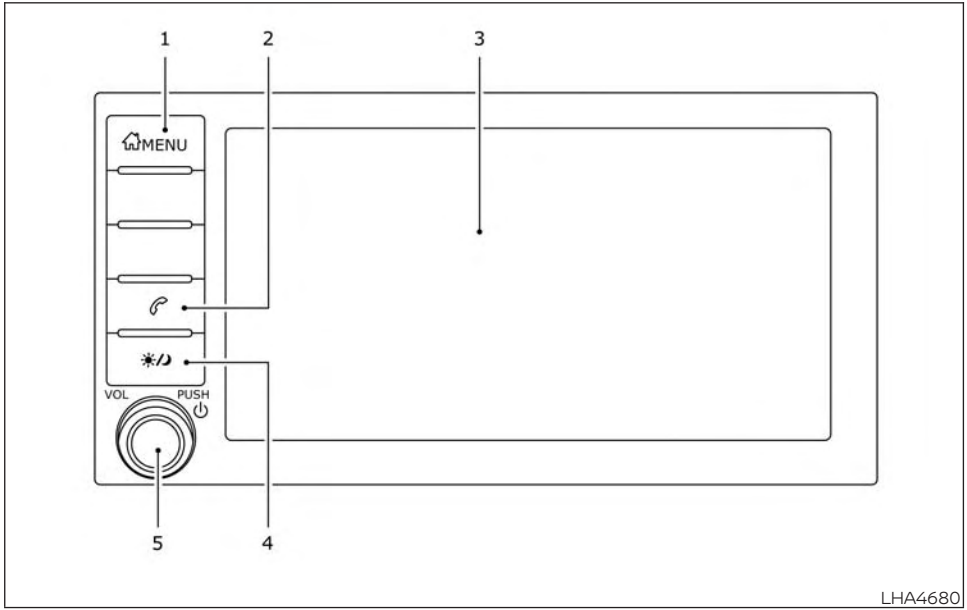

1. MENU button
2. button*
3. Display screen
4. (brightness control) button
5. VOL (volume) knob / PUSH (power) button

* For additional information regarding the Bluetooth® Hands-Free Phone System control button, refer to "Bluetooth® Hands-Free Phone System" in this section.

When you use this system, make sure the engine is running.

If you use the system with the engine not running for a long time, it will discharge the battery, and the engine will not start.

Reference symbols:

"Example" — Words marked in quotes refer to a key shown only on the display. These keys can be selected by touching the screen.

HOW TO USE THE TOUCH-SCREEN

⚠ CAUTION

- **The glass display screen may break if it is hit with a hard or sharp object. If the glass screen breaks, do not touch it. Doing so could result in an injury.**
- **To clean the display, never use a rough cloth, alcohol, benzine, thinner or any kind of solvent or paper towel with a chemical cleaning agent. They will scratch or deteriorate the panel.**
- **Do not splash any liquid such as water or car fragrance on the display. Contact with liquid will cause the system to malfunction.**

To help ensure safe driving, some functions cannot be operated while driving.

The on-screen functions that are not available while driving will be "grayed out" or muted.

⚠WARNING

- **ALWAYS give your full attention to driving.**
- **Avoid using vehicle features that could distract you. If distracted, you could lose control of your vehicle and cause an accident.**

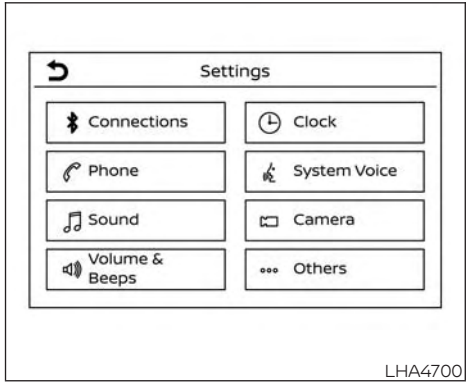

Touch-screen operation

Menu Item		Result
Selecting the item		Touch an item to select. To select the "Phone" key, touch the "Phone" key on the screen. Touch the " ⮌ " key to return to the previous screen.
Adjusting the item		Touch the "+" key or the "—" key to adjust the settings of an item. Touch the up arrow to scroll up the page one item at a time. Touch the down arrow to scroll down the page one item at a time.
Inputting characters		Touch the number key. There are some options available when inputting characters.
	123	Touch to manually enter numbers.
	OK	Completes the character input.

Touch-screen maintenance

If you clean the display screen, use a dry, soft cloth. If additional cleaning is necessary, use a small amount of neutral detergent with a soft cloth. Never spray the screen with water or detergent. Dampen the cloth first and then wipe the screen.

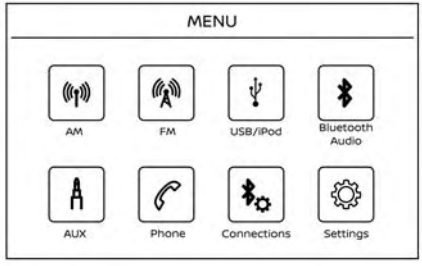

LHA4706

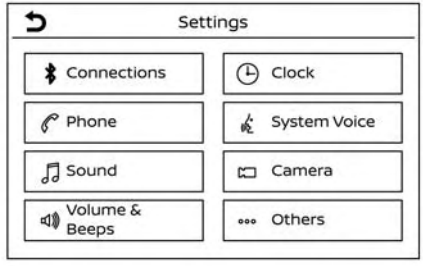

LHA4700

HOW TO USE THE MENU BUTTON

To select and/or adjust several functions, features and modes that are available for your vehicle:

1. Press the MENU button.
2. Touch the "Settings" key.
3. Touch the desired item.

Menu item			Result
Settings			Touch to change the following steps.
	Connections		Touch this key to select either Bluetooth® phone, Bluetooth® audio or USB audio options. For additional information, refer to “USB connections screen” and “Bluetooth® connections screen” in this section.
	Phone		For additional information, refer to “Bluetooth® Hands-Free Phone System” in this section.
	Sound		For additional information, refer to “Audio system” in this section.
	Volume & Beeps		For additional information, refer to “Volume & beeps” in this section.
	Clock		Touch this key to adjust clock settings.
		On-screen Clock	Touch to toggle ON or OFF the clock display on the upper right corner of the display screen.
		Clock Format	Touch to set the clock to 12 hours or 24 hours formats.
		Daylight Savings Time	Touch to adjusts the daylight saving time to ON or OFF.
		Set Clock Manually	Touch to adjust the clock manually; then touch to change between AM and PM, the hour and the minutes.
	System Voice		For additional information, refer to “Settings” in this section.
	Camera		Touch this key to change the camera settings.
	Others		Touch this key to select and/or adjust various functions of this system. A screen with additional options will appear.
		Display	Touch this key to adjust the appearance of the display. For additional information, refer to “Adjusting the screen” in this section.
		Language	Touch this key to change the language on the display.
		OSS Licenses	Touch this key to display software licensing information.
		Return All Settings To Default	Touch this key to return all settings to default and to clear the memory.

☼/☽ (brightness control) BUTTON

To change the display brightness, press the ☼/☽ button. Pressing the button again will change the display to the day or the night display.

Press and hold the ☼/☽ button for more than 2 seconds to turn the display off. Press and hold the button again to turn the display on.

HOW TO USE THE VOL (volume) KNOB / PUSH ⏻ (power) BUTTON

Press the PUSH ⏻ (power) button to turn audio function on and off. Turn the VOL (volume) knob to adjust audio volume.

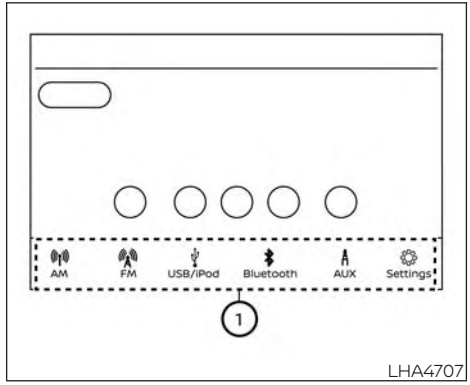

SELECTING MENU FROM LAUNCH BAR

Various system functions can be accessed by touching the items on the Launch Bar ① which is displayed on most of the main menu screens (the Launch Bar does not appear on some screens such as settings screens, camera screens, etc.)

Touch the keys on the Launch Bar to display the corresponding menu screens.

The following menu items are available on the Launch Bar:

- AM
- FM
- USB/iPod
- Bluetooth
- AUX
- Settings

REARVIEW MONITOR (if so equipped)

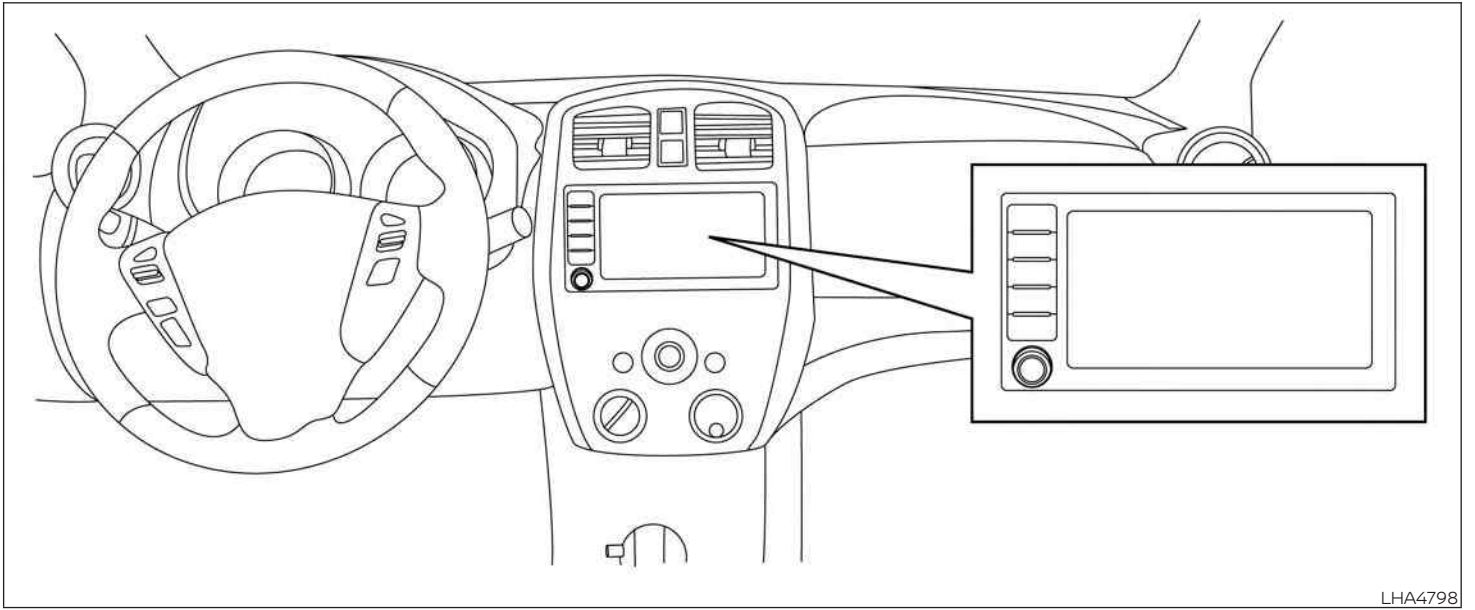

⚠ WARNING

- **Failure to follow the warnings and instructions for proper use of the RearView Monitor system could result in serious injury or death.**
- **RearView Monitor is a convenience feature and is not a substitute for proper backing. Always turn and look out the windows and check mirrors to be sure that it is safe to move before operating the vehicle. Always back up slowly.**
- **The system is designed as an aid to the driver in showing large stationary objects directly behind the vehicle, to help avoid damaging the vehicle.**
- **The distance guide line and the vehicle width line should be used as a reference only when the vehicle is on a level paved surface. The distance viewed on the monitor is for reference only and may be different than the actual distance between the vehicle and displayed objects.**

⚠ CAUTION

Do not scratch the camera lens when cleaning dirt or snow from the front of the camera.

The RearView Monitor system automatically shows a rear view of the vehicle when the shift lever is shifted into the R (Reverse) position. The radio can still be heard while the RearView Monitor is active.

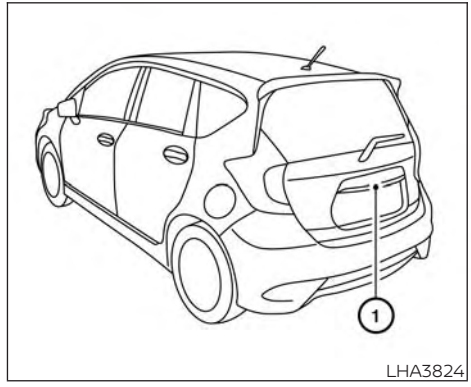

To display the rear view, the RearView Monitor system uses a camera located next to the trunk handle ①.

REARVIEW MONITOR SYSTEM OPERATION

With the ignition switch in the ON position, move the shift lever to the R (Reverse) position to operate the RearView Monitor.

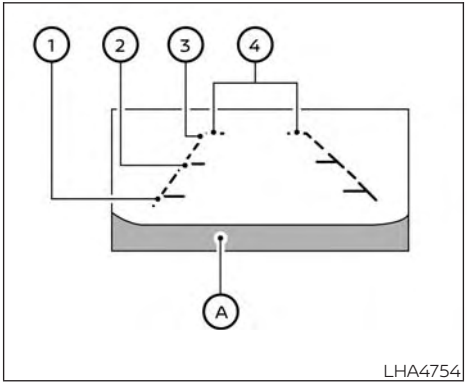

HOW TO READ THE DISPLAYED LINES

Guiding lines which indicate the vehicle width and distances to objects with reference to the vehicle body line Ⓐ are displayed on the monitor.

Distance guide lines

Indicate distances from the vehicle body.

- Red line ①: approx. 1.5 ft (0.5 m)
- Yellow line ②: approx. 3 ft (1 m)
- Green line ③: approx. 7 ft (2 m)

Vehicle width guide lines ④

Indicate the vehicle width when backing up.

DIFFERENCE BETWEEN PREDICTED AND ACTUAL DISTANCES

The displayed guidelines and their locations on the ground are for approximate reference only. Objects on uphill or downhill surfaces or projecting objects will be actually located at distances different from those displayed in the monitor relative to the guidelines (refer to illustrations). When in doubt, turn around and view the objects as you are backing up, or park and exit the vehicle to view the positioning of objects behind the vehicle.

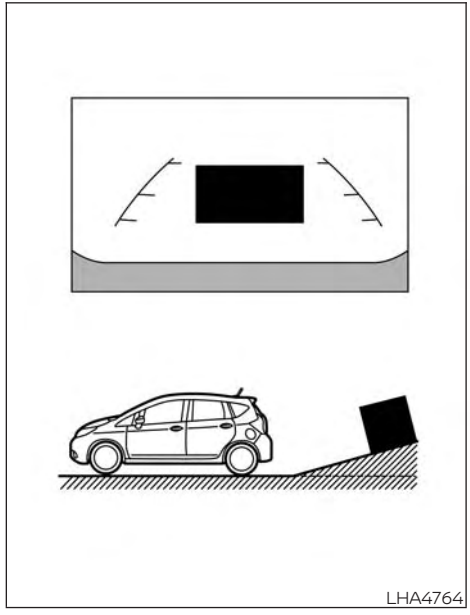

Backing up on a steep uphill

When backing up the vehicle up a hill, the distance guide lines and the vehicle width guide lines are shown closer than the actual distance. Note that any object on the hill is further than it appears on the monitor.

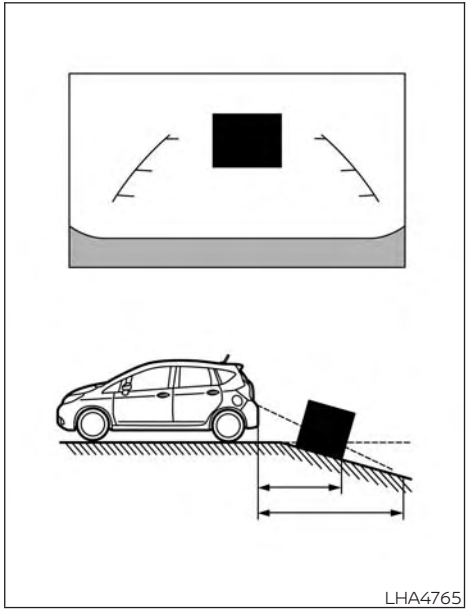

Backing up on a steep downhill

When backing up the vehicle down a hill, the distance guide lines and the vehicle width guide lines are shown farther than the actual distance. Note that any object on the hill is closer than it appears on the monitor.

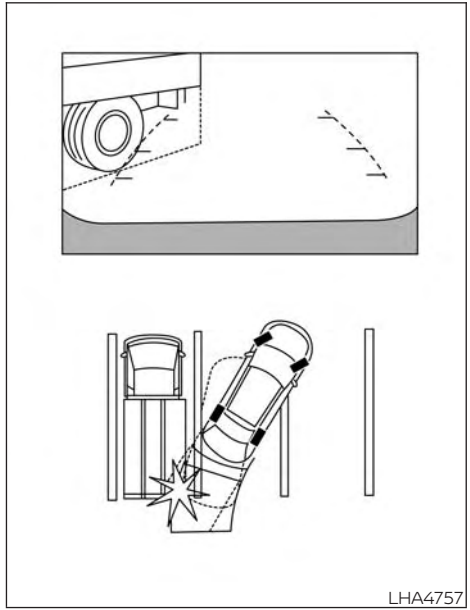

Backing up near a projecting object

The vehicle may seem to nearly clear the object in the display. However, the vehicle may hit the object if it projects over the actual backing up course.

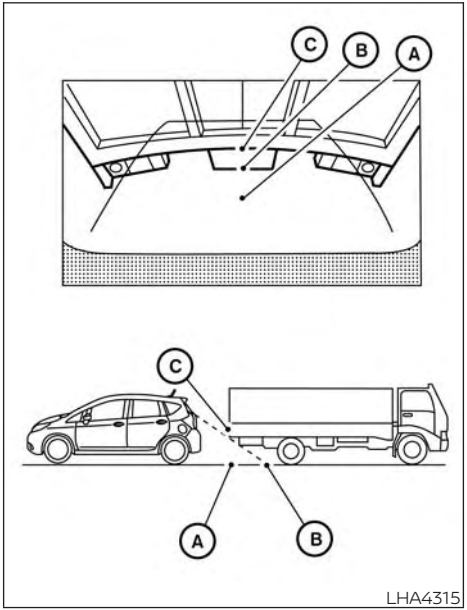

Backing up behind a projecting object

The position Ⓒ is shown farther than the position Ⓑ in the display. However, the position Ⓒ is actually at the same distance as the position Ⓐ. The vehicle may hit the object when backing up to the position Ⓐ if the object projects over the actual backing up course.

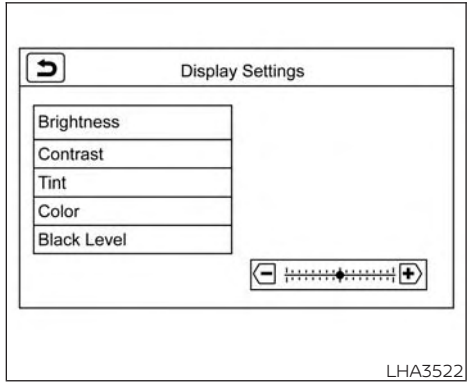

ADJUSTING THE SCREEN

The procedure for adjusting the display settings of the screen differs depending on the type of screen present on the vehicle.

1. While on the main menu screen, touch the "Settings" key.
2. Touch the "Camera" key.
3. Touch the "Brightness", "Contrast", "Tint" "Color", or "Black Level" key.
4. Adjust the item by touching the "+" or "-" key on the touch-screen display.

NOTE:

Do not adjust any of the display settings of the RearView Monitor while the vehicle is moving. Make sure the parking brake is firmly applied.

REARVIEW MONITOR SYSTEM LIMITATIONS

⚠ WARNING

Listed below are the system limitations for RearView Monitor. Failure to operate the vehicle in accordance with these system limitations could result in serious injury or death.

- **The system cannot completely eliminate blind spots and may not show every object.**
- **Underneath the bumper and the corner areas of the bumper cannot be viewed on the RearView Monitor because of its monitoring range limitation. The system will not show small objects below the bumper, and may not show objects close to the bumper or on the ground.**
- **Objects viewed in the RearView Monitor differ from actual distance because a wide-angle lens is used.**
- **Objects in the RearView Monitor will appear visually opposite compared to when viewed in the rearview and outside mirrors.**
- **Use the displayed lines as a reference. The lines are highly affected by the number of occupants, fuel level, vehicle position, road conditions and road grade.**
- **Make sure that the rear hatch is securely closed when backing up.**
- **Do not put anything on the rearview camera. The rearview camera is installed above the license plate.**
- **When washing the vehicle with high pressure water, be sure not to spray it around the camera. Otherwise, water may enter the camera unit causing water condensation on the lens, a malfunction, fire or an electric shock.**
- **Do not strike the camera. It is a precision instrument. Otherwise, it may malfunction or cause damage resulting in a fire or an electric shock.**

The following are operating limitations and do not represent a system malfunction:

- When the temperature is extremely high or low, the screen may not clearly display objects.
- When strong light directly shines on the camera, objects may not be displayed clearly.
- Vertical lines may be seen in objects on the screen. This is due to strong reflected light from the bumper.
- The screen may flicker under fluorescent light.
- The colors of objects on the RearView Monitor may differ somewhat from the actual color of objects.
- Objects on the monitor may not be clear in a dark environment.
- There may be a delay when switching between views.
- If dirt, rain or snow accumulate on the camera, RearView Monitor may not display objects clearly. Clean the camera.
- Do not use wax on the camera lens. Wipe off any wax with a clean cloth dampened with a diluted mild cleaning agent, then wipe with a dry cloth.

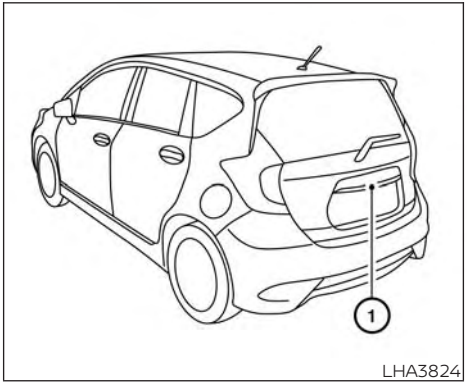

SYSTEM MAINTENANCE

⚠ CAUTION

- **Do not use alcohol, benzine or thinner to clean the camera. This will cause discoloration.**
- **Do not damage the camera as the monitor screen may be adversely affected.**

If dirt, rain or snow accumulates on the camera ①, the RearView Monitor may not display objects clearly. Clean the camera by wiping it with a cloth dampened with a diluted mild cleaning agent and then wiping it with a dry cloth.

VENTS

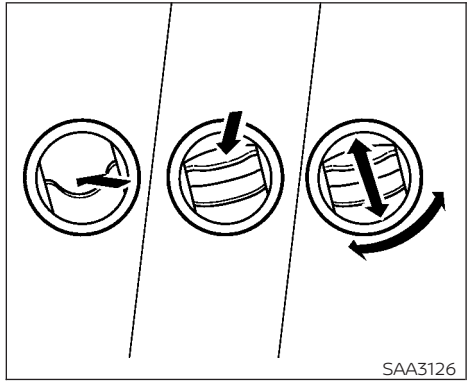

Side vents

Adjust the air flow direction of the vents by opening, closing or rotating.

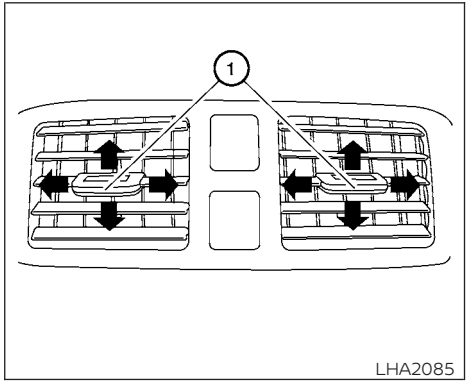

Center vents

Adjust the air flow direction of the vents by moving the slide as indicated ①.

⚠ WARNING

- **The air conditioner cooling function operates only when the engine is running.**
- **Do not leave children or adults who would normally require the assistance of others alone in your vehicle. Pets should also not be left alone. They could accidentally injure themselves or others through inadvertent operation of the vehicle. Also, on hot, sunny days, temperatures in a closed vehicle could quickly become high enough to cause severe or possibly fatal injuries to people or animals.**
- **Do not use the recirculation mode for long periods as it may cause the interior air to become stale and the windows to fog up.**

NOTE:

- **Odors from inside and outside the vehicle can build up in the air conditioner unit. Odor can enter the passenger compartment through the vents.**
- **When parking, set the heater and air conditioner controls to turn off air recirculation to allow fresh air into the passenger compartment. This should help reduce odors inside the vehicle.**

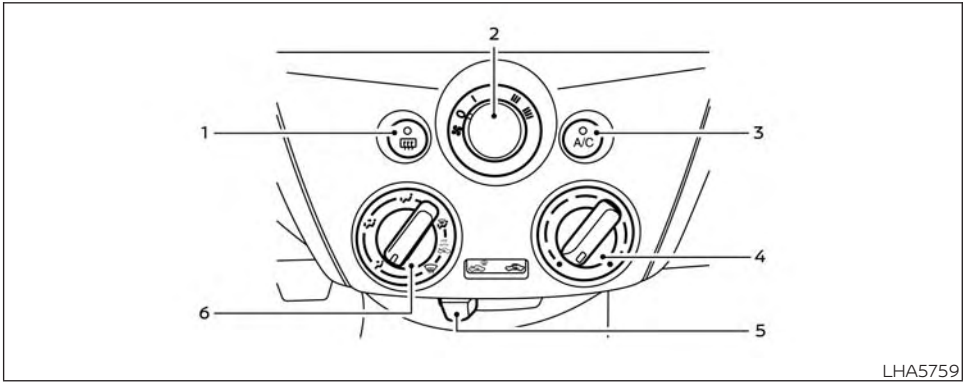

1. Rear window and outside mirror (if so equipped) defroster switch
2. Fan speed control dial
3. A/C (air conditioner) button
4. Temperature control dial
5. Air intake lever (air recirculation and fresh air)
6. Air flow control dial

CONTROLS

Fan speed control dial

The fan speed control dial turns the fan on and off, and controls fan speed.

Air flow control dial

The air flow control dial allows you to select the air flow outlets.

— Air flows from center and side vents.

— Air flows from center and side vents and foot outlets.

— Air flows mainly from foot outlets.

— Air flows from defroster outlets and foot outlets.

— Air flows mainly from defroster outlets.

Temperature control dial

The temperature control dial allows you to adjust the temperature of the outlet air. To lower the temperature, turn the dial to the left. To increase the temperature, turn the dial to the right.

Fresh air

Move the air intake lever to the position. The air flow is drawn from outside the vehicle.

Air recirculation

Move the air intake lever to the position to recirculate air inside the vehicle.

Use the selection:

- when driving on a dusty road.
- to prevent traffic fumes from entering passenger compartment.
- for maximum cooling when using the air conditioner.

A/C (air conditioner) button

Start the engine, turn the fan speed control dial to the desired position and press the A/C button to turn on the air conditioner. The indicator light comes on when the air conditioner is operating. To turn off the air conditioner, press the A/C button again.

The air conditioner cooling function operates only when the engine is running.

Rear window and outside mirror (if so equipped) defroster switch

For additional information, refer to "Rear window and outside mirror (if so equipped) defroster switch" in the "Instruments and controls" section of this manual.

HEATER OPERATION

Heating

This mode is used to direct heated air to the foot outlets. Some air also flows from the defrost outlets.

1. Move the air intake lever to the position for normal heating.
2. Turn the air flow control dial to the position.
3. Turn the fan speed control dial to the desired position.
4. Turn the temperature control dial to the desired position between the middle and the hot position.

Ventilation

This mode directs outside air to the side and center vents.

1. Move the air intake lever to the position.
2. Turn the air flow control dial to the position.
3. Turn the fan speed control dial to the desired position.
4. Turn the temperature control dial to the desired position.

Defrosting or defogging

This mode directs the air to the defrost outlets to defrost/defog the windows.

1. Move the air intake lever to the position.
2. Turn the air flow control dial to the position.
3. Turn the fan speed control dial to the desired position.
4. Turn the temperature control dial to the desired position between the middle and the hot position.

- To quickly remove ice or fog from the windows, turn the fan control dial to the maximum position and the temperature control dial to the full hot position.
- For additional information on how to optimize defogging performance, refer to the advice label on the sun visor.

When the or position is selected, press the A/C button to turn on the air conditioner for better performance. This will dehumidify the air and help defog the windows.

Bi-level heating

This mode directs cooler air from the side and center vents and warmer air from the floor outlets. When the temperature control dial is moved to the full hot or full cool position, the air between the vents and the floor outlets is the same temperature.

1. Move the air intake lever to the position.

2. Turn the air flow control dial to the position.
3. Turn the fan speed control dial to the desired position.
4. Turn the temperature control dial to the desired position.

Heating and defogging

This mode heats the interior and defogs the windshield.

1. Move the air intake lever to the position.
2. Turn the air flow control dial to the position.
3. Turn the fan speed control dial to the desired position.
4. Turn the temperature control dial to the desired position between the middle and the hot position.

- When or are selected, the air conditioner turns on (the A/C indicator light may not illuminate). This will dehumidify the air and help defog the windows.

Operating tips

Clear snow and ice from the wiper blades and air inlet in front of the windshield. This improves heater operation.

AIR CONDITIONER OPERATION

Start the engine, turn the fan speed control dial to the desired position, and press the A/C button to activate the air conditioner. When the air conditioner is on, cooling and dehumidifying functions are added to the heater operation.

The air conditioner cooling function operates only when the engine is running.

Cooling

This mode is used to cool and dehumidify the air.

1. Move the air intake lever to the position.
2. Turn the air flow control dial to the position.
3. Turn the fan speed control dial to the desired position.
4. Press the A/C button. The indicator light comes on.
5. Turn the temperature control dial to the desired position.

- For quick cooling when the outside temperature is high, move the air intake lever to the position. Be sure to return to the position for normal cooling.

Dehumidified heating

This mode is used to heat and dehumidify the air.

1. Move the air intake lever to the position.
2. Turn the air flow control dial to the position.
3. Turn the fan speed control dial to the desired position.
4. Press the A/C button. The indicator light comes on.
5. Turn the temperature control dial to the desired position.

Dehumidified defogging

This mode is used to defog the windows and dehumidify the air.

1. Move the air intake lever to the position.

2. Turn the air flow control dial to the position.
3. Turn the fan speed control dial to the desired position.
4. Turn the temperature control dial to the desired position.

Operating tips

- Keep the windows closed while the air conditioner is in operation.
- After parking in the sun, drive for 2 or 3 minutes with the windows open to vent hot air from the passenger compartment. Then, close the windows. This allows the air conditioner to cool the interior more quickly.
- **The air conditioning system should be operated for approximately 10 minutes at least once a month. This helps prevent damage to the system due to lack of lubrication.**
- A visible mist may be seen coming from the ventilators in hot, humid conditions as the air is cooled rapidly. This does not indicate a malfunction.
- **If the engine coolant temperature gauge indicates engine coolant temperature over the normal range, turn the air conditioner off. For additional information, refer to "If your vehicle overheats" in the "In case of emergency" section of this manual.**

AIR FLOW CHARTS

The following charts show the button and dial positions for **MAXIMUM AND QUICK** heating, cooling or defrosting. **The air intake lever should always be in the position for heating and defrosting.**

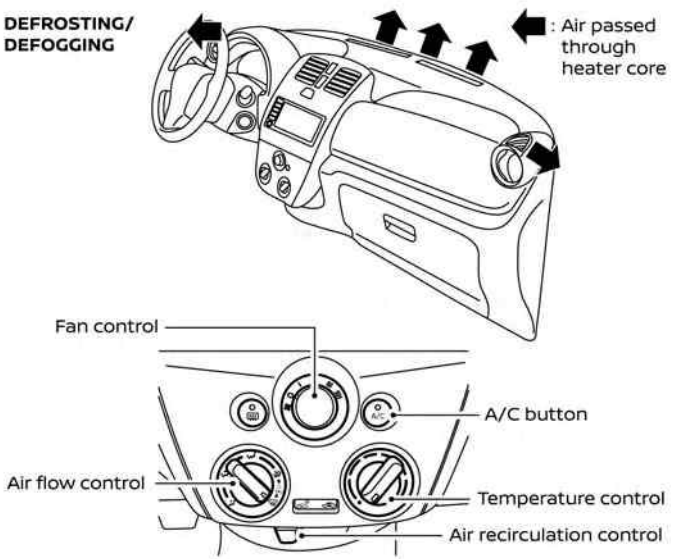

Fan control	Air recirculation control	A/C button	Temp. control	Air flow control
4		ON	HOT (RIGHT)	

LHA4968

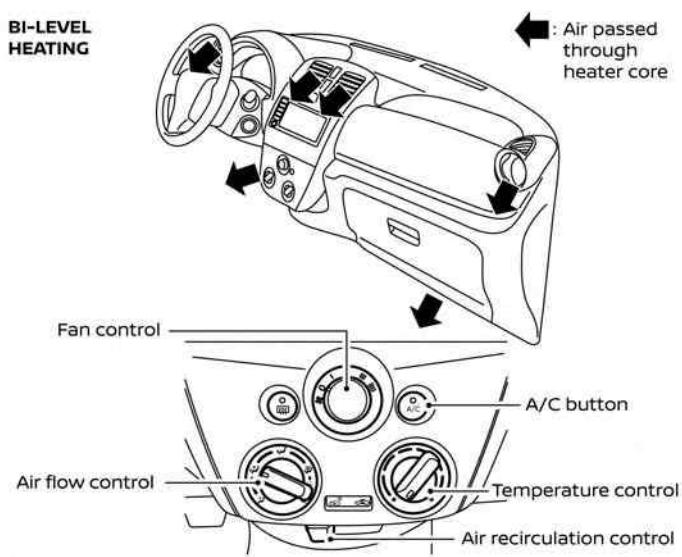

Fan control	Air recirculation control	A/C button	Temp. control	Air flow control
4		OFF	HOT (RIGHT)	

LHA4969

HEATING

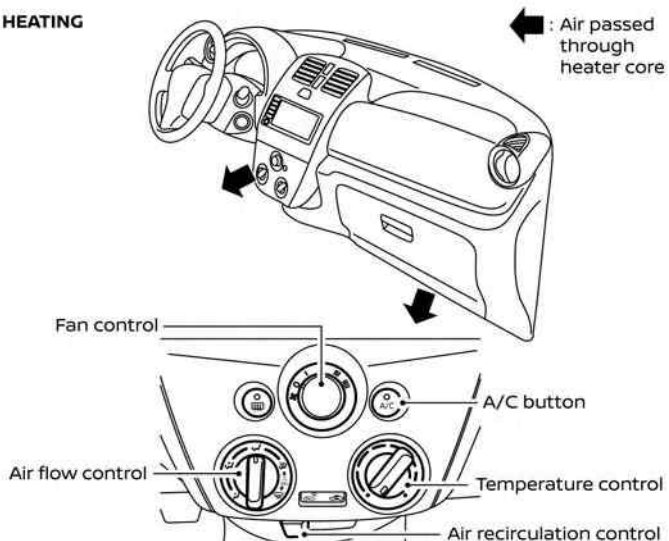

Fan control	Air recirculation control	A/C button	Temp. control	Air flow control
4		OFF	HOT (RIGHT)	

LHA4970

HEATING & DEFROSTING/ DEFOGGING

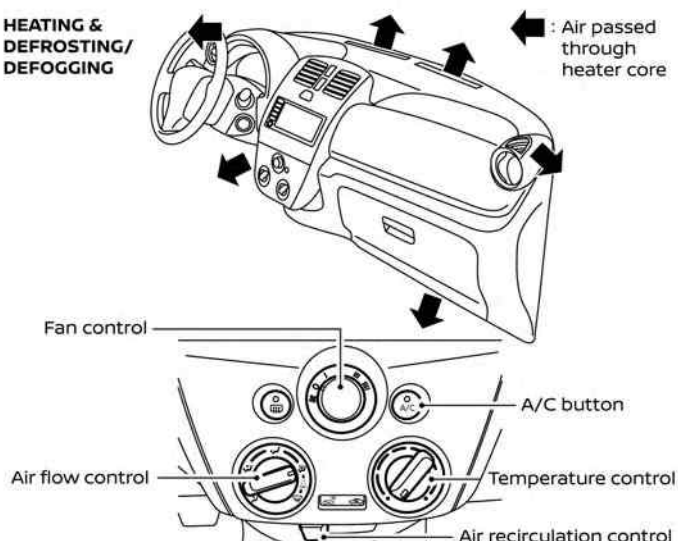

Fan control	Air recirculation control	A/C button	Temp. control	Air flow control
4		AUTO ON	HOT (RIGHT)	

LHA4971

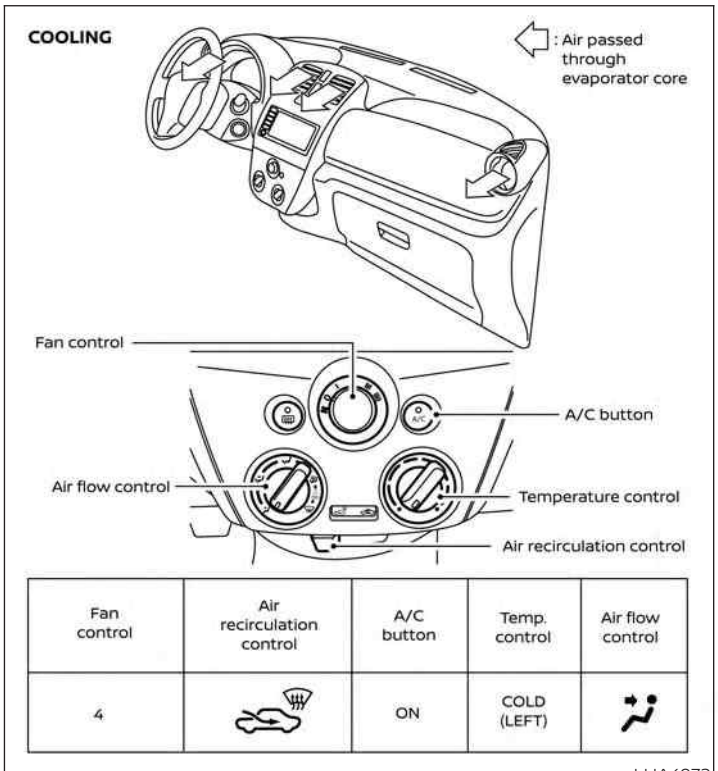

Fan control	Air recirculation control	A/C button	Temp. control	Air flow control
4		ON	COLD (LEFT)	

SERVICING AIR CONDITIONER

The air conditioner system in your NISSAN vehicle is charged with a refrigerant designed with the environment in mind.
This refrigerant does not harm the earth's ozone layer.

Special charging equipment and lubricant is required when servicing your NISSAN air conditioner. Using improper refrigerants or lubricants will cause severe damage to your air conditioner system. For additional information, refer to "Air conditioner system refrigerant and oil recommendations" in the "Technical and consumer information" section of this manual.

It is recommended that you visit a NISSAN dealer to service your "environmentally friendly" air conditioning system.

⚠ WARNING

The air conditioner system contains refrigerant under high pressure. To avoid personal injury, any air conditioner service should be done only by an experienced technician with proper equipment.

AUDIO SYSTEM

RADIO

With the ignition placed in the ACC or ON position, press the PUSH ⏻ (power) or ON•OFF button to turn the radio on. If you listen to the radio with the engine not running, the ignition should be placed in the ACC position.
Radio reception is affected by station signal strength, distance from radio transmitter, buildings, bridges, mountains and other external influences. Intermittent changes in reception quality normally are caused by these external influences.

Using a cellular phone in or near the vehicle may influence radio reception quality.

Radio reception

Your NISSAN radio system is equipped with state-of-the-art electronic circuits to enhance radio reception. These circuits are designed to extend reception range, and to enhance the quality of that reception.

However, there are some general characteristics of both FM and AM radio signals that can affect radio reception quality in a moving vehicle, even when the finest equipment is used. These characteristics are completely normal in a given reception area and do not indicate any malfunction in your NISSAN radio system.

Reception conditions will constantly change because of vehicle movement. Buildings, terrain, signal distance and interference from other vehicles can work against ideal reception. Described below are some of the factors that can affect your radio reception.

Some cellular phones or other devices may cause interference or a buzzing noise to come from the audio system speakers. Storing the device in a different location may reduce or eliminate the noise.

FM RADIO RECEPTION

Range: FM range is normally limited to 25 – 30 mi (40 – 48 km), with monaural (single channel) FM having slightly more range than stereo FM. External influences may sometimes interfere with FM station reception even if the FM station is within 25 mi (40 km). The strength of the FM signal is directly related to the distance between the transmitter and receiver. FM signals follow a line-of-sight path, exhibiting many of the same characteristics as light. For example, they will reflect off objects.

Fade and drift: As your vehicle moves away from a station transmitter, the signals will tend to fade and/or drift.

Static and flutter: During signal interference from buildings, large hills or due to antenna position (usually in conjunction with increased distance from the station transmitter), static or flutter can be heard. This can be reduced by adjusting the treble control to reduce treble response.

Multipath reception: Because of the reflective characteristics of FM signals, direct and reflected signals reach the receiver at the same time. The signals may cancel each other, resulting in momentary flutter or loss of sound.

AM RADIO RECEPTION

AM signals, because of their low frequency, can bend around objects and skip along the ground. In addition, the signals can be bounced off the ionosphere and bent back to earth. Because of these characteristics, AM signals are also subject to interference as they travel from transmitter to receiver.

Fading: Occurs while the vehicle is passing through freeway underpasses or in areas with many tall buildings. It can also occur for several seconds during ionospheric turbulence even in areas where no obstacles exist.

Static: Caused by thunderstorms, electrical power lines, electric signs and even traffic lights.

AUDIO OPERATION PRECAUTIONS

USB (Universal Serial Bus) connection port

⚠ WARNING

Do not connect, disconnect or operate the USB device while driving. Doing so can be a distraction. If distracted you could lose control of your vehicle and cause an accident or serious injury.

⚠ CAUTION

- **Do not force the USB device into the USB port. Inserting the USB device tilted or up-side-down into the port may damage the port. Make sure that the USB device is connected correctly into the USB port.**
- **Do not grab the USB port cover (if so equipped) when pulling the USB device out of the port. This could damage the port and the cover.**
- **Do not leave the USB cable in a place where it can be pulled unintentionally. Pulling the cable may damage the port.**

The vehicle is not equipped with a USB device. USB devices should be purchased separately as necessary.

This system cannot be used to format USB devices. To format a USB device, use a personal computer.

In some jurisdictions, the USB device for the front seats plays only sound without images for regulatory reasons, even when the vehicle is parked.

This system supports various USB memory devices, USB hard drives and iPod® players. Some USB devices may not be supported by this system.

- Partitioned USB devices may not play correctly.

- Some characters used in other languages (Chinese, Japanese, etc.) may not appear properly in the display. Using English language characters with a USB device is recommended.

General notes for USB use:

- For additional information, refer to your device manufacturer's owner information regarding the proper use and care of the device.

Notes for iPod® use:

iPod® is a trademark of Apple Inc., registered in the U.S. and other countries.

- Improperly plugging in the iPod® may cause a checkmark to be displayed on and off (flickering). Always make sure that the iPod® is connected properly.
- An iPod® nano (1st Generation) may remain in fast forward or rewind mode if it is connected during a seek operation. In this case, please manually reset the iPod®.
- An iPod® nano (2nd Generation) will continue to fast-forward or rewind if it is disconnected during a seek operation.
- An incorrect song title may appear when the Play Mode is changed while using an iPod® nano (2nd Generation).
- Audiobooks may not play in the same order as they appear on an iPod®.
- Large video files cause slow responses in an iPod®. The vehicle center display may momentarily black out, but will soon recover.
- If an iPod® automatically selects large video files while in the shuffle mode, the vehicle center display may momentarily black out, but will soon recover.

Bluetooth® streaming audio

- Some Bluetooth® audio devices may not be recognized by the in-vehicle audio system.
- It is necessary to set up the wireless connection between a compatible Bluetooth® audio device and the in-vehicle Bluetooth® module before using the Bluetooth® audio.
- Operating procedure of the Bluetooth® audio will vary depending on the devices. Make sure how to operate your audio device before using it with this system.
- The Bluetooth® audio may be stopped under the following conditions:
  - Receiving a call on the Bluetooth® Hands-Free Phone System.
  - Checking the connection to the hands-free phone.
- Do not place the Bluetooth® audio device in an area surrounded by metal or far away from the in-vehicle Bluetooth® module to prevent tone quality degradation and wireless connection disruption.
- While an audio device is connected through the Bluetooth® wireless connection, the battery power of the device may discharge quicker than usual.
- This system supports the Bluetooth® Audio Distribution Profile (A2DP, AVRCP).

Bluetooth®

BLUETOOTH® is a trademark owned by Bluetooth SIG, Inc. and licensed to Panasonic.

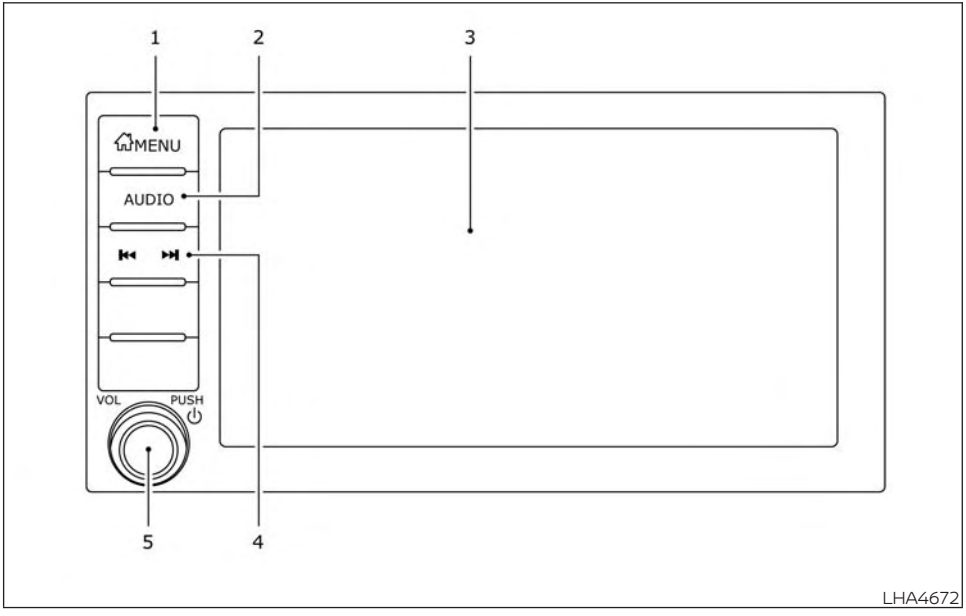

FM/AM RADIO

1. MENU button
2. AUDIO button
3. Display screen
4. ⏮ / ⏭ (SEEK/TRACK) buttons
5. VOL (volume) knob / PUSH ⏻ (power) button

For additional information, refer to "Audio operation precautions" regarding all operation precautions in this section.

Audio main operation

VOL (volume) knob / PUSH ⏻ (power) button

Place the ignition switch in the ON position and press the PUSH ⏻ (power) button while the system is off to call up the mode (radio, AUX, Bluetooth® audio, USB or iPod®) that was playing immediately before the system was turned off.

To turn the system off, press the PUSH ⏻ (power) button.

Turn the VOL (volume) knob to adjust the volume.

This vehicle may be equipped with Speed Sensitive Volume. When this feature is active, the audio volume changes as the driving speed changes.

MENU button

Press the MENU button to show the Menu screen. Touch the "Settings" key on the display, then touch the "Sound" key.

Sound Settings		
	Bass	Adjusts the bass to the desired level.
	Treble	Adjusts the treble to the desired level.
	Balance	Adjusts the balance to the desired level. Balance adjusts the sound level between the left and right speakers.
	Fade	Adjusts the fade to the desired level. Fade adjusts the sound level between the front and rear speakers.
	Speed Sensitive Volume	Adjusts the speed sensitive volume function, which increases the volume of the audio system as the speed of the vehicle increases. Set to "OFF" to disable the feature. The higher the setting, the more the volume increases in relation to vehicle speed.

Bass, treble, balance, fade and Speed Sensitive Volume can be adjusted by touching "-"/"+" , "L"/"R", or "R"/"F" keys.

AUDIO button

Push to display the audio screen. When this button is pushed while the audio screen is not displayed, the last audio source played will play.

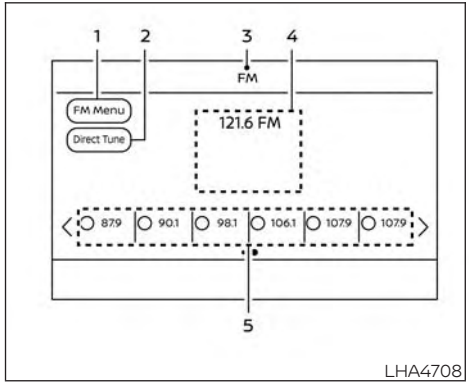

AM/FM radio screen

1. "AM Menu" / "FM Menu" key
   Touch to display the radio menu screen.
2. Direct Tune
   Touch to manually enter a station.
3. Audio source indicator
   Indicates the currently selected audio source.
4. Reception information display
   Reception information currently available such as frequency, station name, etc. is displayed.
5. Preset list
   To listen to a preset station, touch the corresponding station from the preset list. If displayed, touch the "**<**" or "**>**" keys to scroll the preset list.

AM radio operation

Press the MENU button and touch the "AM" key or press the AUDIO button and select AM on the bottom of the Launch Bar to bring up the AM display screen.

If another audio source is playing when the "AM" key is pressed, the audio source playing will automatically be turned off and the last radio station played will begin playing.

AM Menu

Touch the "AM Menu" key to display the AM Menu screen options:

- SCAN: To scan tune the stations, touch the "AM Menu" key on the radio screen and then touch the "SCAN" key. The stations will be tuned from low to high frequencies and stop at each broadcasting station for several seconds. Touching the "SCAN" key again during this period of several seconds will stop tuning and the radio will remain tuned to that station.

- Refresh: Touch the "Refresh" key to scan and update the station list displayed on the right side of the AM Menu screen.

(SEEK/TRACK) buttons

Press the ⏮ or ⏭ buttons to tune from low to high or high to low frequencies and to stop at the next broadcasting station.

1 to 6 station memory operations

Up to six stations can be registered in the preset list.

1. Select the AM radio band.
2. Tune to the station you wish to store.
3. Touch and hold one of the preset numbers in the preset list.

The information such as frequency will be displayed on the preset list.

To select and listen to the preset stations, push ▲ or ▼ on the steering wheel briefly or touch a preferred station on the preset list on the radio screen.

FM radio operation

Press the MENU button and touch the "FM" key or press the AUDIO button and select FM on the bottom of the Launch Bar to bring up the FM display screen.

If another audio source is playing when the "FM" key is pressed, the audio source playing will automatically be turned off and the last radio station played will begin playing.

The FM stereo indicator (STEREO) is shown on the screen during FM stereo reception. When the stereo broadcast signal is weak, the radio automatically changes from stereo to monaural reception.

FM Menu

Touch the "FM Menu" key to display the FM Menu screen options:

- SCAN: To scan tune the stations, touch the "FM Menu" key on the radio screen and then touch the "SCAN" key. The stations will be tuned from low to high frequencies and stop at each broadcasting stations for several seconds. Touching the "SCAN" key again during this period of several seconds will stop tuning and the radio will remain tuned to that station.
- Refresh: Touch the "Refresh" key to update the station list displayed on the right side of the FM Menu screen.
- RDS Info: Radio station and song information can be displayed on the FM display screen.

(SEEK/TRACK) buttons

Press the ⏮ or ⏭ buttons to tune from low to high or high to low frequencies and to stop at the next broadcasting station.

1 to 12 Station memory operations

Up to 12 stations can be registered in the preset list.

1. Select the FM radio band.
2. Tune to the station you wish to store.
3. Touch and hold one of the preset numbers in the preset list.

The information such as frequency will be displayed on the preset list.

To select and listen to the preset stations, push ▲ or ▼ on the steering wheel briefly or touch a preferred station on the preset list on the radio screen.

Auxiliary (AUX) devices operation

Connecting auxiliary devices

Connect an AUX device into the AUX input jack located on the center console below the heater and air conditioner controls.

The AUX input jack accepts any standard analog audio input such as from a portable cassette player, CD player, MP3 player or phone.

Insert a 1/8 in (3.5 mm) stereo mini plug in the audio input jack. If a cable with a mono plug is used, the audio output may not function normally.

Activation and playing

Turn on the AUX device. Connect an AUX cable to the AUX device and the AUX input jack. Select AUX mode from the audio source menu screen or by pressing the Source button on the steering wheel.

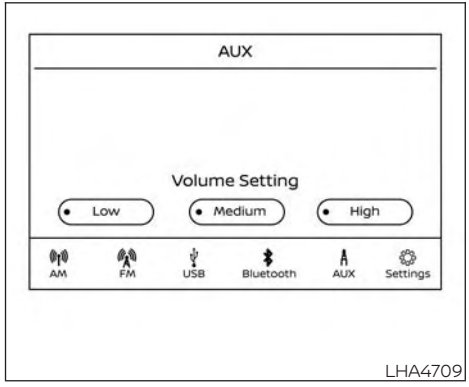

AUX screen

- Audio source indicator
  Indicates that the AUX source is currently playing.
- "Volume Setting" keys
  Touch one of the keys to select the sound output gain from Low, Medium and High.
- AUX from Launch Bar
  Touch to change from another source to AUX.

Additional features

For additional information, refer to "iPod® player operation" in this section.

For additional information, refer to "USB (Universal Serial Bus) connection port" in this section.

For additional information, refer to "Bluetooth® streaming audio" in this section.

Microsoft (WMA) Obligation of Labeling

Additional Obligation of Labeling

This product is protected by certain intellectual property rights of Microsoft Corporation and third parties. Use or distribution of such technology outside of this product is prohibited without a license from Microsoft or an authorized Microsoft subsidiary and third parties.

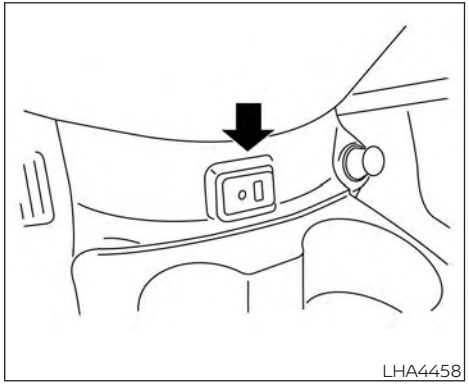

USB (Universal Serial Bus) CONNECTION PORT

Connecting a device to the USB connection port

⚠ WARNING

Do not connect, disconnect, or operate the USB device while driving. Doing so can be a distraction. If distracted you could lose control of your vehicle and cause an accident or serious injury.

⚠ CAUTION

- **To avoid damage and loss of function when using a USB device, note the following precautions.**
- **Do not force the USB device into the USB port. Inserting the USB device tilted or up-side-down into the port may damage the port. Make sure that the USB device is connected correctly into the USB port.**
- **Do not grab the USB port cover (if so equipped) when pulling the USB device out of the port. This could damage the port and the cover.**
- **Do not leave the USB cable in a place where it can be pulled unintentionally. Pulling the cable may damage the port.**

For additional information, refer to your device manufacturer's owner information regarding the proper use and care of the device.

The USB port is located on the center console beneath the heater and air conditioner controls. Insert the USB device into the connection port.

When a compatible storage device is plugged into the connection port, compatible audio files on the storage device can be played through the vehicle's audio system. The port is illuminated for better visibility when the headlight switch is in the ON position.

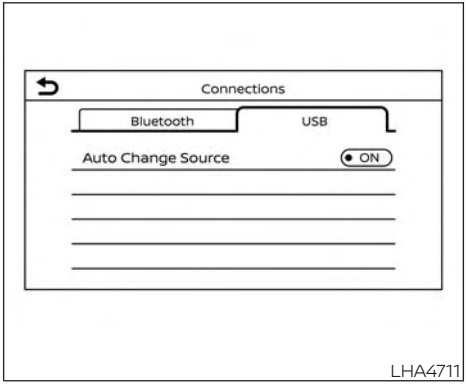

USB connections screen

Press the MENU button and touch the "Connections" key or press the "Settings" key and touch the "Connections" key to change USB settings.

- Auto Change Source
  Touch ON or OFF to change the audio source settings for USB memory devices or an iPod® connected through a USB cable.

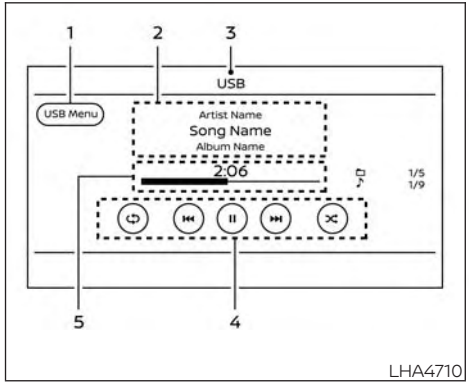

USB screen

1. "USB Menu" key
   Touch to switch to the USB Menu screen.
2. Track information
   Track information such as the song name, artist name and album name are displayed.
3. Audio source indicator
   Indicates the currently selected audio source.
4. USB operation keys
   Touch to control USB playback functions
5. Play time and progress bar
   The play time of the track is displayed. The bar indicates the progress in playing a track.

USB operation keys

Touch to control USB playback functions.

Keys	Description
	Each time " " key is touched, the repeat mode changes.
	Touch to return to the beginning of the current track. Touch again to select the previous track. Touch and hold to rewind the current track.
	Touch to play the track.
	Touch to pause the track.
	Touch to select the next track. Touch and hold to fast-forward the track.
	Each time " " key is touched, the random mode changes.

USB memory device player operation

Activation and playing

Connecting the USB memory device into the port will start playing the USB memory.

USB memory device can also be played by touching the "USB" key on the Menu screen or by touching USB on the Launch Bar.

To pause playing the USB memory device touch the " ⏸ " key. To resume playing, touch the " ▶ " key.

Skipping tracks

To skip the tracks, push the ⏮ or ⏭ buttons on the control panel or touch the " ⏮ " or " ⏭ " keys on the screen repeatedly until the preferred track is selected.

NOTE:

Depending on the condition, skipping to the previous track may require pushing the button or touching the key twice. Pushing the button or touching the key once may only restart the current track from the beginning.

Fast-forwarding/rewinding

To rewind or fast-forward the track, push and hold the ⏮ or ⏭ buttons on the control panel or touch and hold the " ⏮ " or " ⏭ " keys on the screen.

Changing play mode

Repeat mode

Touch the " 🔁 " key on the USB screen to change the repeat mode.
The following modes are available:
All: Repeat all

1 Folder: Repeat folder/sub-folder

1 Track: Repeat track

Random mode

Touch the " 🔀 " key on the screen to change the random mode as follows:
No text displayed: Random off

All: Repeat all

1 Folder: Repeat folder/sub-folder

USB menu

Touch the "USB Menu" key on the USB screen to display the USB Menu screen.

"Now Playing" key	Touch to display the USB screen.
"Folder List" key	Touch to display the folder list. Touch an item on the list to select the folder. The sub-folder or track list will be displayed. Select a sub-folder or track from the list.
"Album Artwork"	Touch to run on/off the album artwork display on the USB screen.

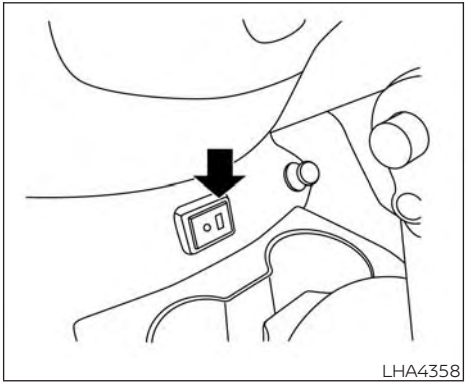

iPod®* PLAYER OPERATION

Connecting iPod®

⚠ WARNING

Do not connect, disconnect, or operate the USB device while driving. Doing so can be a distraction. If distracted you could lose control of your vehicle and cause an accident or serious injury.

⚠ CAUTION

- **Do not force the USB device into the USB port. Inserting the USB device tilted or up-side-down into the port may damage the port. Make sure that the USB device is connected correctly into the USB port.**
- **Do not grab the USB port cover (if so equipped) when pulling the USB device out of the port. This could damage the port and the cover.**
- **Do not leave the USB cable in a place where it can be pulled unintentionally. Pulling the cable may damage the port.**

For additional information, refer to your device manufacturer's owner information regarding the proper use and care of the device.

To connect an iPod® to the vehicle so that the iPod® can be controlled with the audio system controls and display screen, use the USB connection port located on the center console below the heater and air conditioner controls. Connect the iPod®-specific end of the cable to the iPod® and the USB end of the cable to the USB connection port on the vehicle. If your iPod® supports charging via a USB connection, its battery will be charged while connected to the vehicle with the ignition switch in the ON position. The port is illuminated for better visibility when the headlight switch is in the ON position.

While connected to the vehicle, the iPod® can only be operated by the vehicle audio controls.

To disconnect the iPod® from the vehicle, remove the USB end of the cable from the USB connection port on the vehicle, then remove the cable from the iPod®.

* iPod® is a trademark of Apple Inc., registered in the U.S. and other countries.

Compatibility

The following models are compatible:

- iPod® Classic 5th generation (firmware version 1.3.0 or later)
- iPod® Classic 6th generation (firmware version 2.0.1 or later)
- iPod® Classic 7th generation (firmware version 2.0.4 or later)
- iPod® Shuffle 1st generation
- iPod® Shuffle 2nd generation

- iPod® Shuffle 3rd generation
- iPod® Shuffle 4th generation
- iPod® Touch 1st generation (firmware version 4.2.1 or later)*
- iPod® Touch 2nd generation (firmware version 4.2.1 or later)*
- iPod® Touch 3rd generation (firmware version 5.1 or later)
- iPod® Touch 4th generation (firmware version 5.1 or later)
- iPod® Touch 5th generation (firmware version 5.1 or later)
- iPod® Touch 6th generation (firmware version 5.1 or later)
- iPod® nano - 1st generation (firmware version 1.3.1 or later)
- iPod® nano - 2nd generation (firmware version 1.1.3 or later)
- iPod® nano - 3rd generation (firmware version 1.1.3 or later)
- iPod® nano - 4th generation (firmware version 1.0.4 or later)
- iPod® nano - 5th generation (firmware version 1.0.2 or later)
- iPod® nano - 6th generation (firmware version 1.1 or later)
- iPod® nano - 7th generation (firmware version 1.1 or later)
- iPhone® 3G (firmware version 4.2.1 or later)
- iPhone® 3GS (firmware version 5.1 or later)
- iPhone® 4 (firmware version 5.1 or later)
- iPhone® 5 (firmware version 5.1 or later)
- iPhone® 5C (firmware version 5.1 or later)
- iPhone® 5S (firmware version 5.1 or later)
- iPhone® 6 (firmware version 5.1 or later)
- iPhone® 6 Plus (firmware version 5.1 or later)
- iPhone® 6S (firmware version 5.1 or later)
- iPhone® 6S Plus (firmware version 5.1 or later)
- iPhone® SE (firmware version 5.1 or later)
- iPhone® 7 (firmware version 5.1 or later)
- iPhone® 7 Plus (firmware version 5.1 or later)
- iPhone® 8 (firmware version 5.1 or later)
- iPhone® 8 Plus (firmware version 5.1 or later)
- iPhone® X (firmware version 5.1 or later)
- iPad® 2
- iPad® 3rd generation
- iPad® 4th generation
- iPad® 5th generation
- iPad® Mini
- iPad® Mini 2
- iPad® Mini 3
- iPad® Mini 4
- iPad® Air
- iPad® Air 2
- iPad® Pro (9.7 inch)
- iPad® Pro (10.5 inch)
- iPad® Pro (12.9 inch)
- iPad® Pro (12.9 inch) 2nd generation

* Some features of this iPod® may not be fully functional.

Make sure that your iPod® firmware is updated to the version indicated above.

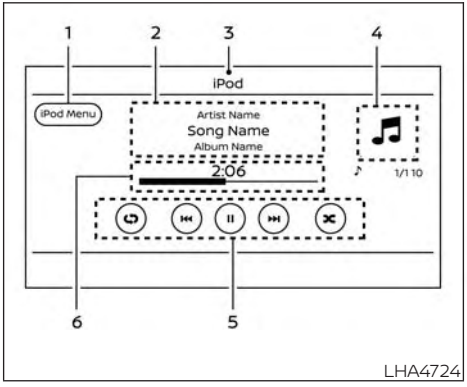

iPod screen

1. "iPod Menu" key
   Touch to switch to the iPod Menu screen.
2. Track information
   Track information such as the song name, artist name and album name are displayed.
3. Audio source indicator
   Indicates the currently selected audio source.
4. Album artwork
   An image of the album artwork is displayed when available if the setting is turned on.
5. iPod® operation keys
   Touch to control iPod® playback functions
6. Play time and progress bar
   The play time of the track is displayed. The bar indicates the progress in playing a track.

iPod® operation keys

Touch to control iPod® playback functions.

Keys	Description
⟲	Each time " ⟲ " key is touched, the repeat mode changes.
⏮	Touch to return to the beginning of the current track. Touch again to select the previous track. Touch and hold to rewind the current track.
▶	Touch to play the track.
⏸	Touch to pause the track.
⏭	Touch to select the next track. Touch and hold to fast-forward the track.
⤮	Each time " ⤮ " key is touched, the random mode changes.

iPod® memory device player operation

Activation and playing

Connecting the iPod® to the vehicle via USB cable will activate the iPod® mode.

The iPod® can also be played by touching the "iPod" key on the Menu screen or by touching iPod on the Launch Bar.

Skipping tracks

To skip the tracks, push the ⏮ or ⏭ buttons on the control panel or touch the " ⏮ " or " ⏭ " keys on the screen repeatedly until the preferred track is selected.

NOTE:

Depending on the condition, skipping to the previous track may require pushing the button or touching the key twice. Pushing the button or touching the key once may only restart the current track from the beginning.

Fast-forwarding/rewinding

To rewind or fast-forward the track, push and hold the ⏮ or ⏭ buttons on the control panel or touch and hold the " ⏮ " or " ⏭ " keys on the screen,

Changing play mode

Repeat mode

Touch the "⟲" key on the iPod® screen to change the repeat mode. The following modes are available.
No text displayed: Repeat off

All: Repeat all

One: Repeat track

Random mode

Touch the "⤮" key on the screen to change the random mode as follows.
No text displayed: Random off

Songs: Random play

iPod® Menu

Touch the "iPod Menu" key on the iPod® screen to display the iPod® Menu screen.

"Now Playing" key	Touch to display the USB screen.
"Folder List" key (if so equipped)	Touch to display the folder list. Touch an item on the list to select the folder. The sub-folder or track list will be displayed. Select a sub-folder or track from the list.
"Album Artwork" key	Touch to run on/off the album artwork display on the USB screen.
"Playlists" key	Touch to display the list according to the selected item.
"Artists" key	
"Albums" key	
"Songs" key	
"Podcasts" key	
"Genres" key	
"Composers" key	
"Audiobooks" key	
"iTunes Radio" key	

BLUETOOTH® STREAMING AUDIO

If you have a compatible Bluetooth® audio device that is capable of playing audio files, the device can be connected to the vehicle's audio system so that the audio files on the device play through the vehicle's speakers. For additional information, refer to "FM/AM radio" in this section.

NOTE:

For additional information, refer to the cellular phone Owner's Manual.

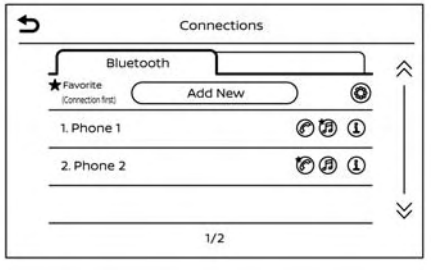

LHA4726

Connecting procedure

NOTE:

The connecting procedure must be performed when the vehicle is stationary. If the vehicle starts moving during the procedure, the procedure will be canceled.

To connect a phone to the Bluetooth® Hands-Free Phone System:

Manual Connecting Procedure

1. Press the MENU button on the control panel.
2. Touch the "Connections" key on the screen.
3. In the Bluetooth tab, touch the "Add New" key to connect a phone.
4. When a compatible phone is found a message with a PIN appears on the screen.
5. Verify the PIN is correct and accept the connection.

Menu Item		Result
Bluetooth		Allows user to switch Bluetooth® on and off. Bluetooth® must be turned on in order to connect a device.
	ON	Turns Bluetooth® functionality on. To turn off, touch the "ON" key again. The indicator light will go off.
Favorite (Connection first)		Allows user to toggle "Phone" and "Audio" favorite settings on and off.
PIN		Allows user to customize the PIN to a four digit number.

Automatic Connecting Procedure

If no phone is connected to the system, press and hold the button on the steering wheel for less than 1.5 seconds. After the prompt, speak "Add Phone", the system will announce "transferring to the add phone settings menu". The system will start the pairing procedure. When a compatible phone is found, a message with a PIN appears on the screen. Operate the Bluetooth® phone to complete the connection process. For additional information, refer to "Bluetooth® connections screen" in this section.

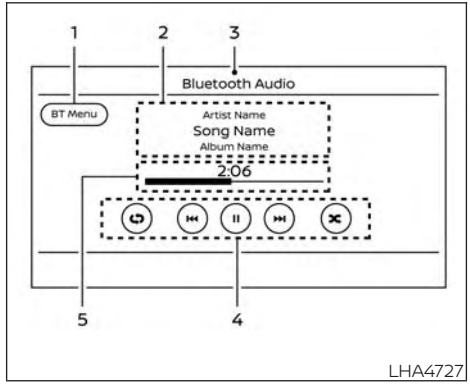

Bluetooth® screen

1. "BT Menu" key
   Depending on the Bluetooth® version supported by the connected device, either the "BT Menu" key or "Connections" key is displayed.
2. Track information
   Track information such as the song name, artist name and album name are displayed.
3. Audio source indicator
   Indicates the currently selected audio source.
4. Bluetooth® audio operation keys
   Touch to control Bluetooth® audio playback functions
5. Play time and progress bar
   The play time of the track is displayed. The bar indicates the progress in playing a track.

Bluetooth® operation keys

Touch to control Bluetooth® playback functions.

Keys	Description
	Each time " " key is touched, the repeat mode changes.
	Touch to return to the beginning of the current track. Touch again to select the previous track. Touch and hold to rewind the current track.
▶	Touch to play the track.
❚❚	Touch to pause the track.
	Touch to select the next track. Touch and hold to fast-forward the track.
	Each time " " key is touched, the random mode changes.

Bluetooth® audio operation

The ability to pause, change tracks, fast forward, rewind, randomize and repeat music may be different between devices. Some or all of these functions may not be supported on each device.

NOTE:

Depending on the Bluetooth® audio device that is connected, it may not be possible to perform audio operations or a delay may occur before music is played back.

Activation and playing

A Bluetooth® audio device can be played by touching the "Bluetooth" key on the Menu screen or by touching Bluetooth on the Launch Bar.

To pause playing the Bluetooth® audio, touch the " ⏸ " key. Touch the " ▶ " key to resume playing.

Changing folders

To change folders, touch the "BT Menu" key.

Fast-forwarding/rewinding

To fast-forward or rewind the track, push and hold the ⏮ or ⏭ buttons on the control panel or touch the " ⏮ " or " ⏭ " keys on the screen.

Changing play mode

Repeat mode

Touch the " 🔁 " key on the screen to change the repeat mode.

Random mode

Touch the " 🔀 " key on the screen to change the random mode.

NOTE:

Available repeat/random modes change depending on the connected device.

BT Menu

Touch the "BT Menu" key on the Bluetooth® audio screen to display the Bluetooth® audio menu screen.

The following items are available.

"Now Playing" key	Touch to display the Bluetooth® audio screen.
"Current List" key*	A list of track in the currently selected folder is displayed.
"Connections" key	Touch to display the connections screen.
"Folder List" key*	Touch to display the folder list. Touch an item on the list to select the folder.

*: displayed only when available.

NOTE:

Depending on the connected device, the "BT Menu" key may not be displayed.

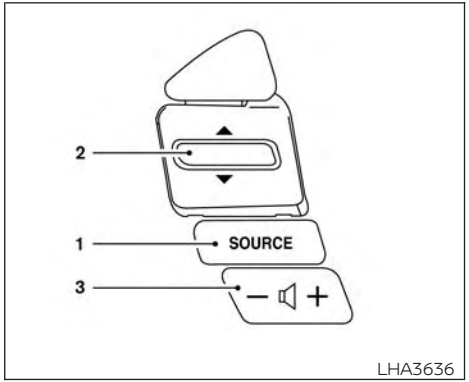

Type A (if so equipped)

STEERING WHEEL SWITCH FOR AUDIO CONTROL

1. SOURCE switch
2. Tuning switch
3. Volume control switch

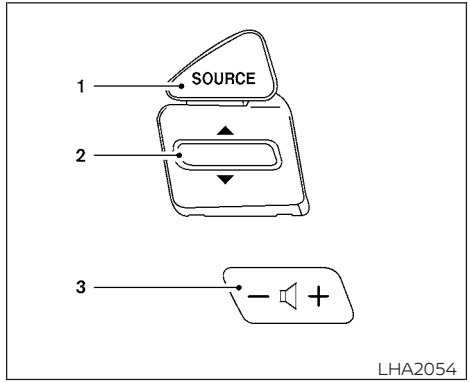

Type B (if so equipped)

SOURCE switch

Push the SOURCE switch to change the mode in the following sequence:

AM → FM → USB/iPod®* → Bluetooth® Audio* → AUX* → AM.

* These modes are only available when compatible media storage is inserted into the device or connected to the system.

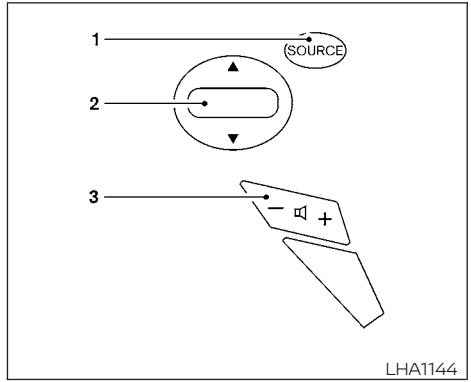

Type C (if so equipped)

Volume control switches

Push the volume control switch to increase or decrease the volume.

▲▼ Tuning switch

For most audio sources, pressing the switches for more than 1.5 seconds provides a different function than pressing for less than 1.5 seconds.

AM and FM:

- Push the ▲▼ switch for less than 1.5 seconds to increase or decrease the preset station.
- Push the ▲▼ switch for more than 1.5 seconds to seek up or down to the next station.

iPod®:

- Push the ▲▼ switch for less than 1.5 seconds to increase or decrease the track number.
- Hold the ▲▼ switch for 1.5 seconds to fast forward or rewind the track being played.

USB:

- Push the ▲▼ switch for less than 1.5 seconds to increase or decrease the track number.
- Hold the ▲▼ switch for 1.5 seconds to fast forward or rewind the track being played.

Bluetooth® Audio:

- Push the ▲▼ switch for less than 1.5 seconds to skip ahead or back to the next song.
- Hold the ▲▼ switch for 1.5 seconds to fast forward or rewind the track being played.

ANTENNA

The antenna cannot be shortened, but can be removed. When you need to remove the antenna, turn the antenna rod counterclockwise.

To install the antenna rod, turn the antenna rod clockwise and hand tighten.

⚠ CAUTION

- **Always properly tighten the antenna rod during installation or the antenna rod may break during vehicle operation.**
- **Be sure that the antenna is removed before the vehicle enters an automatic car wash.**

SIRI® EYES FREE

Apple Siri® Eyes Free personal assistant can be accessed from the vehicle. Siri Eyes Free can be accessed in Siri Eyes Free mode to reduce user distraction. In this mode, Siri Eyes Free is available for interaction by voice control. After connecting a compatible Apple device by using Bluetooth®, Siri Eyes Free can be activated from the button on the steering wheel.

Siri® is a trademark of Apple Inc., registered in the U.S. and other countries.

- Some Siri Eyes Free functions, such as displaying pictures or opening apps, may not be available while driving.
- For getting best results, always update your device to the latest software version.
- Keep the interior of the vehicle as quiet as possible. Close the windows to eliminate the surrounding noises (traffic noises, vibration sounds, etc.), which may prevent the system from recognizing the voice commands correctly.
- For functions that can be used in Siri Eyes Free, please refer to the Apple website.

REQUIREMENTS

Siri® is only available on the iPhone® 4S or later. Devices released before iPhone® 4S are not supported by the Siri® Eyes Free system. Visit www.apple.com/ios/siri for details about device compatibility.

Siri must be enabled on the phone. Please check phone settings.

If the device has a lock screen, Siri must be accessible from the lock screen. Please check phone settings.

For best results, always update your device to the latest software version.

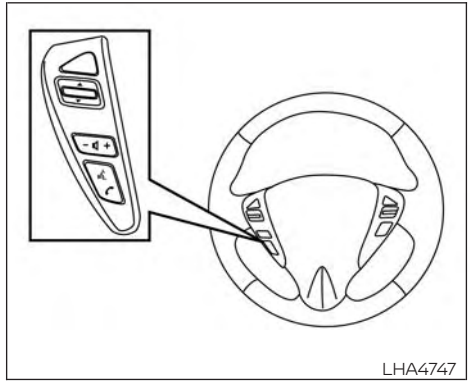

Type A (if so equipped)

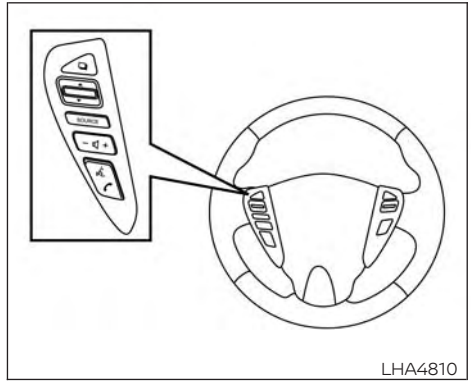

Type B (if so equipped)

OPERATING SIRI® EYES FREE

1. Push button for more than 1.5 seconds.
2. Speak your command and then listen to the Siri® Eyes Free reply.

After starting Siri Eyes Free, push the button again within 5 seconds of the end of the Siri Eyes Free announcement to extend the session.

Example 1 – Playing music

1. Push button for more than 1.5 seconds.
2. Say "Play (artist name, song name, etc.)".
3. Your vehicle will automatically change to Bluetooth® Audio or iPod® mode* when the music starts playing. Mode selection is determined by the phone.

* If the iPhone® is also connected with the USB cable.

If the audio track does not start playing automatically after Siri Eyes Free ends, try changing the track or audio source to resume playback.

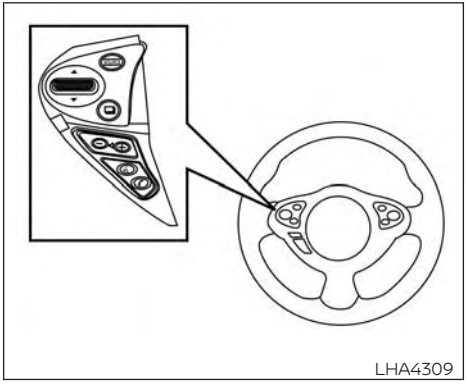

Type C (if so equipped)

NOTE:

For best results, use the native music app. Performance of music control function while using Podcasts, Audiobook or other 3rd party music apps may vary and is controlled by the iPhone®.

Example 2 – Replying to text messages

1. If a compatible iPhone® is connected and "Show Notifications" of the iPhone® settings is enabled, the vehicle will display a notification for new incoming text messages.
2. After reading the message, push or push and hold the button to reply using Siri Eyes Free.
3. After a beep sounds, say "Text message" or a similar command to reply using Siri Eyes Free.

TROUBLESHOOTING GUIDE

Symptom	Cause and Countermeasure
Cannot access Siri® Eyes Free from switch on the steering wheel	Check if a Bluetooth® connection is established between the iPhone® and the system.
	Check if Siri® is enabled on the device. On your phone, go to Siri® setting.
	Check that Siri can be accessed from the device lock screen. This can be set in the settings menu of your phone.
Audio Source does not change automatically to iPod® or Bluetooth® Audio mode	For best results, use the native Music app. Performance of music control function while using Podcasts, Audiobook or other 3rd party music apps may vary.
	For best results, play media already stored on your device. Streaming music or playback from cloud storage may degrade performance.
	Switch the source manually by pressing the AUX or MEDIA button on the vehicle audio system or the SOURCE select switch on the steering wheel.
Play, pause, next track, previous track or play timer does not work	For best results, use the native Music app. Performance of music control function while using Podcasts, Audiobook or other 3rd party music apps may vary and is controlled by the device.
Cannot hear any music/ audio being played back from a connected iPhone®	Check that the audio source is set to Bluetooth® Audio or iPod® mode. A USB connection is required for iPod® mode.
Cannot receive text message notifications on the vehicle audio system	Check if “Send Notifications” is enabled on your phone. On the phone, go to Bluetooth® settings. Find the device name, like “My Car”. Press the INFO button. Turn on “Show Notifications”.
Cannot reply to text message notifications by Siri Eyes Free	After receiving an incoming text message, follow on-screen guidance. Push the button for more than 1.5 seconds on the steering wheel for Siri Eyes Free. After Siri Eyes Free starts, say “Text Message”.

CAR PHONE OR CB RADIO

When installing a CB, ham radio or car phone in your vehicle, be sure to observe the following precautions; otherwise, the new equipment may adversely affect the engine control system and other electronic parts.

⚠ WARNING

- **A cellular phone should not be used for any purpose while driving so full attention may be given to vehicle operation. Some jurisdictions prohibit the use of cellular phones while driving.**
- **If you must make a call while your vehicle is in motion, the hands free cellular phone operational mode is highly recommended. Exercise extreme caution at all times so full attention may be given to vehicle operation.**
- **If you are unable to devote full attention to vehicle operation while talking on the phone, pull off the road to a safe location and stop your vehicle.**

⚠ CAUTION

- **Keep the antenna as far away as possible from the electronic control modules.**
- **Keep the antenna wire more than 8 in (20 cm) away from the electronic control system harnesses. Do not route the antenna wire next to any harness.**
- **Adjust the antenna standing-wave ratio as recommended by the manufacturer.**
- **Connect the ground wire from the CB radio chassis to the body.**
- **For additional information, it is recommended that you visit a NISSAN dealer for servicing.**

BLUETOOTH® HANDS-FREE PHONE SYSTEM

⚠ WARNING

- **Use a phone after stopping your vehicle in a safe location. If you have to use a phone while driving, exercise extreme caution at all times so full attention may be given to vehicle operation.**
- **If you are unable to devote full attention to vehicle operation while talking on the phone, pull off the road to a safe location and stop your vehicle.**

⚠ CAUTION

To avoid discharging the vehicle battery, use a phone after starting the engine.

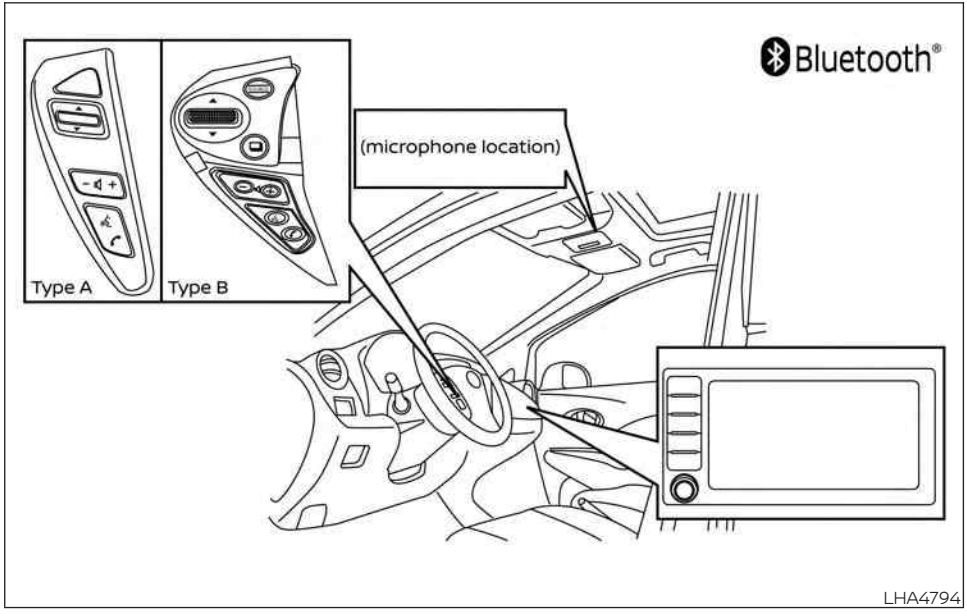

Your NISSAN is equipped with the Bluetooth® Hands-Free Phone System. If you have a compatible Bluetooth® enabled cellular phone, you can set up the wireless connection between your cellular phone and the in-vehicle phone module. With Bluetooth® wireless technology, you can make or receive a hands-free telephone call with your cellular phone in the vehicle.

Once your cellular phone is connected to the in-vehicle phone module, no other phone connecting procedure is required. Your phone is automatically connected with the in-vehicle phone module when the ignition switch is placed in the ACC or ON position with the previously connected cellular phone turned on and carried in the vehicle.

NOTE:

Some devices require the user to accept connections to other Bluetooth® devices. If your phone does not connect automatically to the system, consult the phone's Owner's Manual for details on device operation.

You can connect up to six different Bluetooth® cellular phones to the in-vehicle phone module. However, you can talk on only one cellular phone at a time.

Before using the Bluetooth® Hands-Free Phone System, refer to the following notes.

- Set up the wireless connection between a compatible cellular phone and the in-vehicle phone module before using the hands-free phone system.

- Some Bluetooth® enabled cellular phones may not be recognized or work properly. Please visit www.nissanusa.com/bluetooth or www.nissan.ca/bluetooth for a recommended phone list and connecting instructions.
- You will not be able to use a hands-free phone under the following conditions:
  - Your vehicle is outside of the cellular service area.
  - Your vehicle is in an area where it is difficult to receive a cellular signal; such as in a tunnel, in an underground parking garage, near a tall building or in a mountainous area.
  - Your cellular phone is locked to prevent it from being dialed.
- When the radio wave condition is not ideal or ambient sound is too loud, it may be difficult to hear the other person's voice during a call.
- Do not place the cellular phone in an area surrounded by metal or far away from the in-vehicle phone module to prevent tone quality degradation and wireless connection disruption.
- While a cellular phone is connected through the Bluetooth® wireless connection, the battery power of the cellular phone may discharge quicker than usual. The Bluetooth® Hands-Free Phone System cannot charge cellular phones.
- Some cellular phones or other devices may cause interference or a buzzing noise to come from the audio system speakers. Storing the device in a different location may reduce or eliminate the noise.
- For additional information, refer to the cellular phone Owner's Manual regarding the telephone charges, cellular phone antenna and body, etc.

REGULATORY INFORMATION

FCC Regulatory information

- CAUTION: Changes or modifications not expressly approved by the party responsible for compliance could void the user's authority to operate the equipment.
  This transmitter must not be co-located or operated in conjunction with any other antenna or transmitter.
- NOTE: This device complies with part 15 of the FCC Rules. Operation is subject to the following two conditions:
  1. This device may not cause interference and
  2. This device must accept any interference received, including interference that may cause undesired operation.
- WARNING: This equipment complies with FCC radiation exposure limits set forth for an uncontrolled environment and meets the FCC radio frequency (RF) Exposure Guidelines. This equipment has very low levels of RF energy that is deemed to comply without maximum permissive exposure evaluation (MPE).
  But it is desirable that it should be installed and operated keeping the radiator at least 20cm or more away from person's body.

IC Regulatory information

- NOTE: This device complies with Industry Canada's license-exempt RSSs. Operation is subject to the following two conditions:
  1. This device may not cause interference; and

2. This device must accept any interference, including interference that may cause undesired operation of the device.

– REMARQUE: Le présent appareil est conforme aux CNR d'Industrie Canada applicables aux appareils radio exempts de licence. L'exploitation est autorisée aux deux conditions suivantes:

1. l'appareil ne doit pas produire de brouillage;
2. l'utilisateur de l'appareil doit accepter tout brouillage radioélectrique subi, même si le brouillage est susceptible d'en compromettre le fonctionnement.

– WARNING: This equipment complies with IC radiation exposure limits set forth for an uncontrolled environment and meets RSS-102 of the IC radio frequency (RF) Exposure rules. This equipment has very low levels of RF energy that is deemed to comply without maximum permissive exposure evaluation (MPE).
But it is desirable that it should be installed and operated keeping the radiator at least 20cm or more away from person's body.

– ATTENTION: Cet équipement est conforme aux limites d'exposition aux rayonnements énoncées pour un environnement non contrôlé et respecte les règles d'exposition aux fréquences radioélectriques (RF) CNR-102 de l'IC. Cet équipement émet une énergie RF très faible qui est considérée comme conforme sans évaluation de l'exposition maximale autorisée (MPE).
Cependant, il est souhaitable qu'il devrait être installé et utilisé en gardant une distance de 20 cm ou plus entre le radiateur et le corps humain.

Bluetooth®

BLUETOOTH® is a trademark owned by Bluetooth SIG, Inc. and licensed to Panasonic.

USING THE SYSTEM

The system allows hands-free operation of the Bluetooth® Hands-Free Phone System.

If the vehicle is in motion, some commands may not be available so full attention may be given to vehicle operation.

Initialization

When the ignition switch is placed in the ON position, NISSAN Voice Recognition is initialized, which takes a few seconds. If the button is pressed before the initialization completes, the system will announce "There is no phone connected" and will not react to voice commands.

Operating tips

To get the best performance out of the NISSAN Voice Recognition System, observe the following:

- Keep the interior of the vehicle as quiet as possible. Keep all vents pointed away from the microphone and close the windows to eliminate surrounding noises (traffic noises, vibration sounds, etc.), which may prevent the system from recognizing voice commands correctly.
- Wait until the tone sounds before speaking a command. Otherwise, the command will not be received properly.
- Start speaking a command within 5 seconds after the tone sounds.
- Speak in a natural voice without pausing between words.

- For calling contacts by name, please say both the first and last name of the contact for better recognition.

.Giving voice commands

To operate NISSAN Voice Recognition, press the button located on the steering wheel for less than 1.5 seconds. After the tone sounds, speak a command. The command given is picked up by the microphone, and voice feedback is given when the command is accepted.

- If a command is not recognized, the system announces, "Please say or select a command from the displayed list." Make sure the command is said exactly as prompted by the system and repeat the command in a clear voice.
- If you want to go back to the previous command, you can say "Go back" or "Correction" any time the system is waiting for a response.
- You can cancel a command when the system is waiting for a response by saying, "Cancel" or "Quit." The system announces "Exit" and ends the Voice Recognition session. You can also press and hold the button on the steering wheel for 1.5 seconds at any time to end the Voice Recognition session. Whenever the Voice Recognition session is canceled, a double beep is played to indicate you have exited the system.
- If you want to adjust the volume of the voice feedback, push the (+ or -) volume control switches on the steering wheel while being provided with feedback. You can also use the radio volume control knob.

Voice Prompt Interrupt

In most cases you can interrupt the voice feedback to speak the next command by pressing the button on the steering wheel. After interrupting the system, wait for a beep before speaking your command.

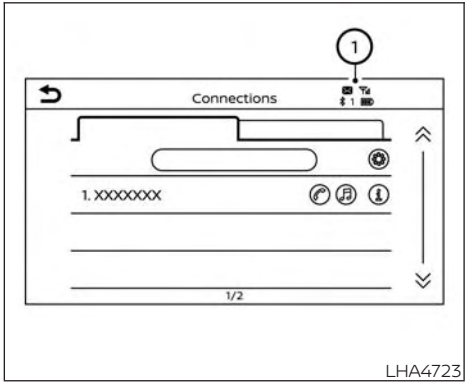

LHA4723

INDICATORS

When a cellular phone is connected through the Bluetooth® wireless connection, indicators ① for the phone and text messaging are displayed on the top of the screen.

Indicator	Description
	Indicates there are unread received messages.
1	Indicates the Bluetooth® device that is currently connected.
	Indicates the strength of the signal the Bluetooth® device is receiving.
	Indicates the amount of remaining Bluetooth® device battery.

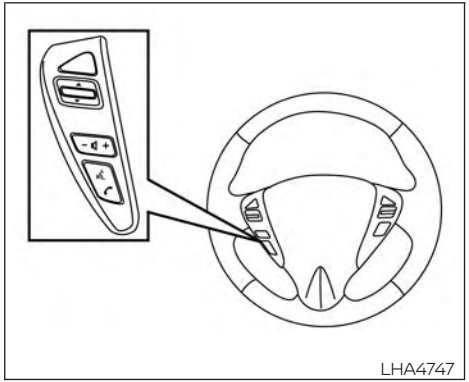

Type A (if so equipped)

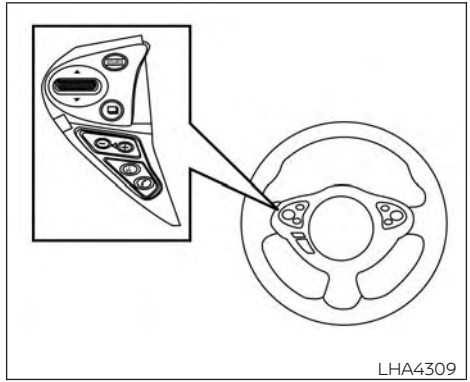

Type B (if so equipped)

CONTROL BUTTONS

The control buttons for the Bluetooth® Hands-Free Phone System are located on the steering wheel.

VOICE COMMAND BUTTON

Press and hold the button for less than 1.5 seconds to initiate the Voice Recognition session. To exit the Voice Recognition session press and hold the for less than 1.5 seconds. For additional information, refer to "Voice prompt interrupt" in this section.

You can use the button to interrupt the system feedback and give a command at once.

If an iPhone® is connected, Siri® can be accessed by pressing the button for more than 1.5 seconds. For additional information, refer to "Siri® Eyes Free" in this section.

PHONE BUTTON

To answer an incoming call or to end a call press the button.

To reject a call press and hold the button.

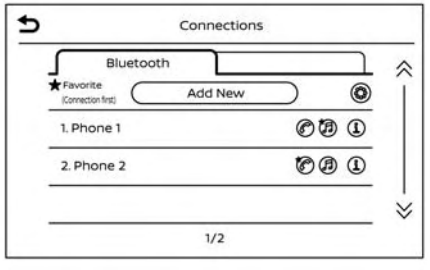

LHA4726

CONNECTING PROCEDURE

NOTE:

The connecting procedure must be performed when the vehicle is stationary. If the vehicle starts moving during the procedure, the procedure will be canceled.

To connect a phone to the Bluetooth® Hands-Free Phone System:

Manual Connecting Procedure

1. Press the MENU button on the control panel.
2. Touch the "Connections" key on the screen.
3. In the Bluetooth tab, touch the "Add New" key to connect a phone.
4. When a compatible phone is found a message with a PIN appears on the screen.
5. Verify the PIN is correct and accept the connection.
6. To access the Bluetooth® settings menu touch the " " key on the Connections screen. The following options are available:

Menu Item		Result
Bluetooth		Allows user to switch Bluetooth® on and off. Bluetooth® must be turned on in order to connect a device.
	ON	Turns Bluetooth® functionality on. To turn off, touch the "ON" key again. The indicator light will go off.
Favorite (Connection first)		Allows user to toggle "Phone" and "Audio" favorite settings on and off.
PIN		Allows user to customize the PIN to a four digit number.

NOTE:

Some cellular phones may require you to accept certain permissions in order to enable features on your Bluetooth® system. During the Bluetooth® pairing process, please check your cellular phone's display for a pop-up with the request to grant phonebook access.
Granting phonebook access permission will allow your contacts to be downloaded to the vehicle's Bluetooth® system. A pop-up may display on your cellular phone stating that the Bluetooth® system would like to access your contacts and call history. Please select "Allow" or Yes" to grant this permission.

Automatic Connecting Procedure

If no phone is connected to the system, press and hold the button on the steering wheel for less than 1.5 seconds. After the prompt, speak "Add Phone", the system will announce "transferring to the add phone settings menu". The system will start the pairing procedure. When a compatible phone is found, a message with a PIN appears on the screen. Operate the Bluetooth® phone to complete the connection process. For additional information, refer to "Bluetooth® connections screen" in this section.

VOICE COMMANDS

Voice commands can be used to operate the Bluetooth® Hands-Free Phone System. Press and hold the button for less than 1.5 seconds to bring up the phone command menu. The commands available are:

- Call <name>
- Dial <number>
- Recent Calls
- Read/Send Text (if so equipped)
- Siri® (if so equipped)
- Voice Assistant (if so equipped)
- Phonebook
- Quick Dial
- Redial
- Select Phone
- Add Phone
- Call <name> Mobile
- Call <name> Home
- Call <name> Office
- Call <name> Main
- Call <name> Other
- Settings

"Call <name>"

Speak this command to make a call to a contact that is stored in the phonebook. Say "Call" followed by a phonebook name to initiate a call. If the system does not recognize the name it will display a list of similar names. After the prompt, speak or touch an item number from the displayed list to place the call.

"Dial <number>"

Speak this command to make a call with a spoken phone number. After the prompt, say "Dial" followed by a 7 to 10 digit phone number. The system will repeat the number back. Say "Dial" to initiate the call or "Correction" to re-enter the phone number.

"Recent Calls"

The following commands are available under "Recent Calls":

- Incoming Calls
  Speak this command to list the last 20 incoming calls to the vehicle. If the call is from an entry in the phonebook, the name will be displayed. Otherwise, the phone number of the incoming call will be displayed.
  When prompted, speak or touch the item number on the screen to place the call. Select the "Next" key to move through the list of incoming calls.
- Outgoing Calls
  Speak this command to list the last 20 outgoing calls from the vehicle. If the call was to an entry in the phonebook, the name will be displayed. Otherwise, the phone number of the outgoing call will be displayed.
  When prompted, speak or touch the item number on the screen to place the call. Select the "Next" key to move through the list of outgoing calls.
- Missed Calls
  Speak this command to list the last 20 missed calls to the vehicle. If the call is from an entry in the phonebook, the name will be displayed. Otherwise, the phone number of the missed call will be displayed.
  When prompted, speak or touch the item number on the screen to place the call. Select the "Next" key to move through the list of missed calls.

"Read Text/Send Text" (if so equipped)

Speak this command to access text messaging functions. For additional information, refer to "Text messaging" in this section.

"Phonebook through voice command"

Speak "Phonebook" to view a list of quick steps to access entries stored in the phonebook. Commands are organized by the phone number type selected in the cellular device. For additional information, refer to the cellular phone's owner's manual.

The following commands are available:

- <Say a Contact Name>
- <Say a Contact Name> Main
- <Say a Contact Name> Home
- <Say a Contact Name> Mobile
- <Say a Contact Name> Office
- <Say a Contact Name> Other

For additional information on manually selecting phonebook entries, refer to "Making a call" in this section.

"Quick dial"

Speak this command to access the Quick dial menu. After the prompt, speak or select an item number on the displayed list to place the call. For additional information, refer to "Making a call" in this section.

"Redial"

Speak this command to call the last number dialed. After the prompt, say "Redial" to dial the number of the last outgoing call. The system will display "Redialing <name/number>". The name of the phonebook entry will be displayed if it is available, otherwise the number being redialed will be displayed.

"Select Phone"

Speak this command to access the Connections menu. For additional information, refer to "Bluetooth® connections screen" in this section.

"Add Phone"

Speak this command to access the Connections menu. For additional information, refer to "Bluetooth® connections screen" in this section.

"Settings"

Speak this command to access the System Voice settings menu. The system will exit Voice Recognition mode. Touch one of the following options on the screen to change the settings.

- Beep Only for Opening Prompt
  By touching the "ON" key, the indicator light will illuminate, the system voice will turn off and only a tone will sound when the Bluetooth® Hands-Free Phone System is activated. To turn the system voice back on, touch the "ON" key again, the indicator light will turn off.
- Best Match List
  When the system doesn't recognize a phonebook name or dial number, it will provide a list of similar sounding results. To turn this off, touch the "ON" button, the indicator light will turn off. To turn on, touch the "ON" key again, the indicator light will turn on.

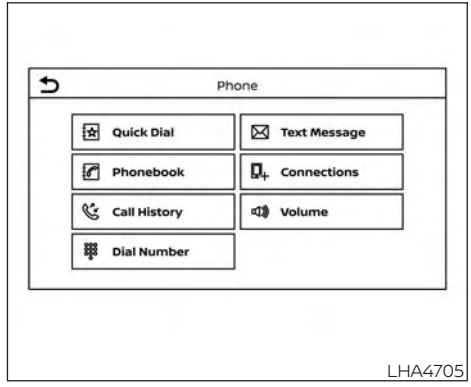

PHONE DISPLAY SCREEN

The Phone screen can be displayed by pressing the button on the control panel.
The following options are displayed:

- Quick Dial
  Displays the Quick Dial screen. For additional information, refer to "Quick dial" in this section.
- Phonebook
  Displays the Phonebook screen. For additional information, refer to "Making a call" in this section.

- Call History
  Displays the Call History screen. For additional information, refer to "Making a call" in this section.
- Dial Number
  Displays the Dial Number screen. For additional information, refer to "Making a call" in this section.
- Text Message
  Displays the received message screen. For additional information, refer to "Text messaging" in this section.
- Connections
  Displays the Connections screen. For additional information, refer to "Bluetooth® connections screen" in this section.
- Volume
  Displays the volume adjustment screen. For additional information, refer to "Volume & beeps" in this section.

MAKING A CALL

To make a call press the button on the control panel. Touch an option from menu screen:

- Phonebook
  Select a person and the phone number you wish to call from the phonebook. Depending on the device, the phonebook will be downloaded from the cellular phone automatically when it is connected. If the automatic download does not take place, the phone number must be transferred to the hands-free phone system from the cellular phone prior to using this method. For additional information, refer to "Phone and text message settings" in this section.
- Call History
  Select a phonebook name or phone number from the recent incoming, outgoing or missed calls tabs. Touch a phonebook name or phone number listed to initiate the call.
- Dial Number
  Enter the phone number manually using the keypad displayed on the screen. Press the "OK" key on the screen to initiate the call.

For additional options to make a call, refer to "Voice commands" in this section.

Quick Dial

Quick Dial entries can be used to quickly make a call. The system allows up to 20 entries to be stored. To set up a quick dial press the button on the control panel. Touch the "Quick Dial" key to display a list of quick dial entries. Touch the "Edit" key to edit current entries or touch the "Add New" key to make a new entry. Two methods are given to create a quick dial entry:

- Touch the "Copy from Call History" key to save a phone number from the Incoming, Outgoing or Missed call history lists. Select the person or phone number from the menu to be added. A registration menu will display the Entry #, phone number, phone number type stored in the cellular phone and Voice Tag. Select the "OK" key.
- Touch the "Copy from Phonebook" key to save a number from the phonebook. Use the scroll keys on the side to move up and down through the menu. Select a person to be added. A menu will display the Entry #, phone number, phone number type stored in the cellular phone and Voice Tag. Select the "OK" key.

Voice tag

A voice tag can be recorded for each of the registered Quick Dial numbers and can be used to dial the number by speaking it. On the Quick Dial registration screen, touch the "Voice Tag" key. Select a relationship from the list or create a new voice tag. To record a new voice tag touch the "Customize" key on the screen. Speak a name after the prompt. Touch the "Play" key to play the recorded voice tag then touch "Store" to save it.

RECEIVING A CALL

When a call is received by the phone connected to the vehicle's Bluetooth® Hands-Free Phone System, the call information is displayed on the control panel display.

Press the button on the steering wheel or touch the " Answer" key on the screen to accept the call. To reject the call touch the " Decline" key on the screen.

If the user is not able to answer the call right away, touch the "Hold Call" key displayed on the screen. A message will be played for the caller: "I'm not able to take a call right now." The user may then accept the call when available or reject the call.

To reject a call, press and hold the button on the steering wheel.

DURING A CALL

While a call is active the following options will appear on the control panel display:

- Mute
  Touch this key to mute or unmute the system.
- Dial Number
  Touch this key to dial digits during the phone call.
- Use Handset
  Touch this key to transfer the call to the handset. To transfer the call back from the handset to the Bluetooth® Hands-Free Phone System, press the button on the control panel then select the "Transfer Hands-free" key on the screen.
- Switch Call
  This option will only be available when a second call is active.

  If supported by the phone, the Bluetooth® Hands-Free Phone System allows for call waiting functionality. If a call is received while another call is already active, a message will be displayed on the screen. Press the button on the steering wheel or touch the " Answer" key on screen to accept the incoming call. Touch the " Decline" key on the screen to reject the second call.

While a call is active, press the button on the steering wheel to access additional options. Speak one of the following commands:

- "Send Digits"
  Speak this command followed by the digits to enter digits during the phone call.
- "Switch call"
  Speak this command to hold the second call and switch back to the original call.

ENDING A CALL

To end an active call, press the button on the steering wheel or touch the " Hang up" key on the screen.

TEXT MESSAGING (if so equipped)

⚠WARNING

- **Laws in some jurisdictions may restrict the use of "Text-to-Speech". Check local regulations before using this feature.**
- **Laws in some jurisdictions may restrict the use of some of the applications and features, such as social networking and texting. Check local regulations for any requirements.**
- **Use the text messaging feature after stopping your vehicle in a safe location. If you have to use the feature while driving, exercise extreme caution at all times so full attention may be given to vehicle operation.**
- **If you are unable to devote full attention to vehicle operation while using the text messaging feature, pull off the road to a safe location and stop your vehicle.**

NOTE:

This feature is automatically disabled if the connected device does not support the Message Access Profile (MAP). For additional information, refer to the phone's Owner's Manual for details and instructions.

NOTE:

Many phones may require special permission to enable text messaging. Check the phone's screen during Bluetooth® pairing. For some phones, you may need to enable 'Notifications' in the phone's Bluetooth® menu for text messages to appear on the headunit. For additional information, refer to your phone's Owner's manual. Text message integration requires that the phone support MAP (Message Access Profile) for both receiving and sending text messages. Some phones may not support all text messaging features. Please refer to www.nissanusa.com/bluetooth or www.nissan.ca/bluetooth for compatibility information, as well as your device's Owner's manual.

The system allows for the sending and receiving of text messages through the vehicle interface.

The availability of the text message function may vary depending on the cellular phone.

When the cellular phone connected to the vehicle receives a text message, a notification will appear on the control panel display. To check the message, touch the "Read" key. Touch the "Ignore" key to save the message to be checked later.

Access text messaging through the vehicles Bluetooth® Hands-Free Phone or through the vehicles control panel.

Text messaging using Bluetooth® Hands-Free Phone System (if so equipped)

Sending a text message (if so equipped)

1. Press and hold the button on the steering wheel for less than 1.5 seconds.
2. Say "Send Text" after the tone.
3. The system will provide a list of available commands in order to determine the recipient of the text message. Choose from the following:
   - Phonebook
   - Quick Dial

- Incoming Calls
- Outgoing Calls
- Missed Calls
- Dial

4. Once a recipient is chosen, the system prompts for which message to send. Nine predefined messages are available. To choose one of the predefined messages, speak one of the following after the tone:
   - "Driving, can't text"
   - "Call me"
   - "On my way"
   - "Running late"
   - "Okay"
   - "Yes"
   - "No"
   - "Where are you?"
   - "When?"

Reading a received text message

1. Press and hold the button on the steering wheel for less than 1.5 seconds.
2. Say "Read Text" after the tone.

The display will show a list of 20 messages with the sender and delivery time. Touch the "Next" key on the screen to view all messages. To view a text message press the button on the steering wheel and speak the number item list on the screen. The following options will be available:

- Play
  Speak this command to have the system say the message.
- Reply
  Speak this command to send a text message response to the sender of the text message.
- Call
  Speak this command to call the sender.
- Previous
  Speak this command to move to the previous text message (if available).
- Next
  Speak this command to move to the next text message (if available).

Siri® Eyes Free (if so equipped)

If a connected phone is equipped with Siri®, it can also be used to create custom messages that are sent through the phone. For additional information, refer to "Siri® Eyes Free" in this section.

NOTE:

Text messages are only displayed if the vehicle speed is less than 5 mph (8 km/h).

NOTE:

For Apple iPhones®, text messages can only be sent through Siri.

Text messaging using the control panel

Display received message list

1. Press the button on the control panel.
2. Touch the "Text Message" key on the screen
3. Touch an item on the list to read or reply to the message.

Up to 100 messages can be stored in the message list.

Received message screen

Touching the "Read" key on the incoming message notification screen or selecting a message from the message list will show the details of the received message on the display.

Available actions:

- Prev.
  Touch this key to read the previous message.
- Next
  Touch this key to read the next message.
- Play/Stop
  Touch the "Play" key to have the hands-free phone system read out the received message. Touch the "Stop" key to stop reading.
- Call
  If the sender of the message is registered in the phonebook, touch the "Call" key to make a call to the sender.
- Reply
  A reply message can be selected from the predefined list.

Sending a text message (if so equipped)

This function may not be supported depending on the cellular phone.

1. Press the button on the control panel.
2. Touch the "Text Message" key on the screen.
3. Touch the "Create Message" key on the screen.

The following items are available:

Available item		Action
To	Enter Number by Keypad	Enter the phone number of the recipient using the keypad. Touch the "OK" key to confirm.
	Quick Dial	Select a recipient from the quick dial list.
	Phonebook	Select a recipient from the phonebook.
	Call History	Select a recipient/phone number from call history.
Select Text		Touch to display a list of predefined text messages.
Send		Touch to send the message.

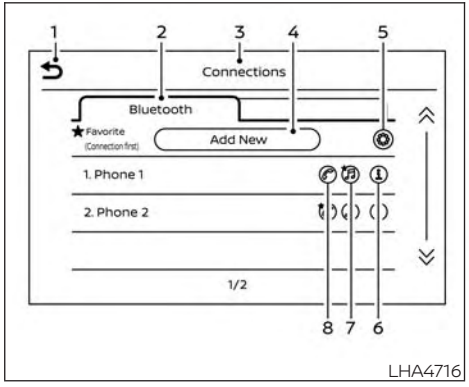

BLUETOOTH® CONNECTIONS SCREEN

1. " ⮌ " (back) key
2. Bluetooth tab
3. Connections screen
4. "Add New" key
5. " ⚙ " (settings) key
6. " ℹ " (info) key
7. " ♫ " (Bluetooth® Audio connection) key
8. " ☎ " (Bluetooth® Hands-Free Phone System connection) key

Access the Connections screen to change settings and view Bluetooth® information. To access the Connections screen press the ⌂ MENU button on the control panel. Touch the "Connections" key on the screen then select the Bluetooth tab.

The paired phone will be added to the list on the Bluetooth® connections screen.

Touching the name of another device on the list will switch the connected device.

⮌ (back) key

Touch the " ⮌ " key to go back to the previous screen.

Connecting Bluetooth®

For additional information on connecting a cellular phone or device to the Bluetooth® Hands-Free Phone System, refer to "Connecting procedure" in this section.

NOTE:

Some cellular phones or other devices may cause interference or a buzzing noise to come from the audio system speakers. Storing the device in a different location may reduce or eliminate the noise.

Bluetooth tab

This tab will display up to 6 Bluetooth® devices. If 6 devices are already connected, one of the devices must be deleted before another device can be connected.

"Add New" key

Touch the this key on the screen to connect a new Bluetooth® device. For additional information, refer to "Connecting procedure" in this section.

" ⚙ " (Bluetooth® settings) key

Touch the " ⚙ " key on the screen to display a list of options.

- **Bluetooth**
  Touch this key to turn the Bluetooth® connection on or off
- **Favorite (Connection first)**
  Touch this key to change which device will be connected first when multiple devices are connected to the vehicle.
  Turn the " ☎ " key on or off to make the device a favorite connection.
  Turn the " ♫ " key on or off to make the device a favorite connection.

- **Pin**
  Touch this key to customize the PIN code. Input a four digit number then touch the "OK" key. The new PIN will be set.

" ⓘ " (info) key

Touch the " ⓘ " key on the screen to display the information of the cellular phone or to delete the device.
Touch the "Delete" key to remove a paired device then select "Yes" when a message appears.

" ✆ " (Bluetooth® Hands-Free Phone System connection) key

A list of connected devices will be displayed on the screen. Touch the " ✆ " key next to the name to connect a device to the Hands-Free Phone System. If the phone is listed as a favorite, a star will appear on the icon. Select the key again to disconnect the device. The device will not be removed from the list. For additional information on removing a device, refer to " ⓘ (info) key" in this section.

" ♫ " (Bluetooth® Audio connection) key

A list of connected devices will be displayed on the screen. Touch the " ♫ " key next to the name to connect a device to Bluetooth® Audio. If the device is listed as a favorite, a star will appear on the icon. Select the key again to disconnect the device. The device will not be removed from the list. For additional information on removing a device, refer to " ⓘ (info) key" in this section.

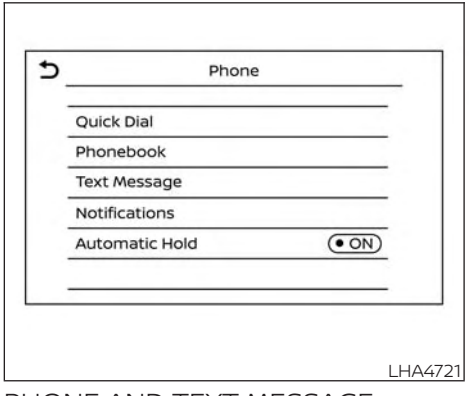

PHONE AND TEXT MESSAGE SETTINGS

Bluetooth® Hands-Free Phone System settings can be changed according to the user's preference. To access the "Phone" settings menu press the ⌂ MENU button on the control panel. Touch the "Settings" key then select the "Phone" key.

The following options are available:

Menu Item		Result
Quick Dial	Edit	Entries in the Quick Dial can be edited. For additional information, refer to "Quick dial" in this section.
	Delete All	Deletes all of the stored phone numbers in quick dial.
Phonebook	Download Entire Phonebook	All the phone numbers that are stored in a phonebook in the cellular phone that is connected to the vehicle are downloaded at once. For additional information, refer to the cellular phone's Owner's Manual.
	Auto Downloaded	Turns on/off automatic downloading of the phonebook when a new phone is connected.
Text Message	Text Message	Turns the text messaging function on/off.
	Text Message Ringtone	Turn the incoming message sound on/off.
	Signature	Turns the signature setting for the outgoing text message on/off.
	Auto Reply	Turns the automatic text message reply function on/off.
	Auto Reply Text Message	Select the text message to be used for the automatic reply. Choose from a list of predefined messages.
Notifications	Driver Only	When this item is turned on, incoming call notification is displayed only on the handset.
	Vehicle Ringtone	Turns the vehicle ringtone on/off.
Automatic Hold		When this item turns on, an incoming call will be put on hold automatically.

Volume & beeps

There are several methods to customize the volume settings.

Volume & Beeps

The Volume & Beeps screen can be found by pressing the MENU button on the control panel, touching the "Settings" key on the screen and selecting "Volume & Beeps". To adjust the volume of the following options, touch the "–" and "+" keys on the screen.

The available settings are:

- Ringtone
  Adjust the volume level of the ringtone of incoming calls.
- Outgoing Call
  Adjust the volume level of the outgoing calls.
- Voice Prompt Vol.
  Adjust the volume level of the system voice.
- Text-to-speech Vol.
  Adjust the volume of the replay voice for text messaging.
- Button Beeps
  Turns on/off the button beep sounds and alarm for prohibited operations.

Volume Settings

The Volume settings screen can be found by pressing the button on the control panel then touching the "Volume" key on the screen. To adjust the volume of the following options, touch the "–" and "+" keys on the screen.

The available settings are:

- Ringtone
  Adjust the volume level of the ringtone of incoming calls.
- Outgoing Call
  Adjust the volume level of the outgoing calls.

MEMO

5 Starting and driving

Precautions when starting and driving 5-2
Exhaust gas (carbon monoxide) 5-2
Three-way catalyst 5-2
Tire Pressure Monitoring System (TPMS) (if so equipped). 5-3
Avoiding collision and rollover 5-7
Off-road recovery 5-7
Rapid air pressure loss 5-8
Drinking alcohol/drugs and driving 5-9
Ignition switch (if so equipped). 5-9
Continuously Variable Transmission (if so equipped) 5-10
Manual transmission (if so equipped) 5-10
Ignition switch positions. 5-11
NISSAN Vehicle Immobilizer System (if so equipped) 5-11
Push-button ignition switch (if so equipped) 5-11
Operating range. 5-12
Push-button ignition switch positions 5-13
Emergency engine shut off 5-14
NISSAN Intelligent Key® battery discharge (if so equipped) 5-14
NISSAN Vehicle Immobilizer System (if so equipped) 5-15
Before starting the engine. 5-15
Starting the engine 5-16
Driving the vehicle 5-17
Continuously Variable Transmission (CVT) (if so equipped) 5-17
Manual transmission (if so equipped) 5-22
Parking brake 5-23
Cruise control (if so equipped) 5-24
Precautions on cruise control. 5-24
Cruise control operations. 5-25
Break-in schedule 5-26
Fuel efficient driving tips 5-27
Increasing fuel economy 5-28
Parking/parking on hills 5-29
Power steering 5-30
Brake system. 5-31
Brake precautions 5-31
Anti-lock Braking System (ABS) 5-31
Brake Assist 5-32
Vehicle Dynamic Control (VDC) system 5-33
Brake force distribution. 5-35
Cold weather driving 5-36
Freeing a frozen door lock 5-36

Antifreeze 5-36
Battery 5-36
Draining of coolant water. 5-36
Tire equipment 5-36
Special winter equipment 5-36
Driving on snow or ice 5-37
Engine block heater (if so equipped) 5-37

⚠ WARNING

- **Do not leave children or adults who would normally require the assistance of others alone in your vehicle. Pets should also not be left alone. They could accidentally injure themselves or others through inadvertent operation of the vehicle. Also, on hot, sunny days, temperatures in a closed vehicle could quickly become high enough to cause severe or possibly fatal injuries to people or animals.**
- **Properly secure all cargo to help prevent it from sliding or shifting. Do not place cargo higher than the seatbacks. In a sudden stop or collision, unsecured cargo could cause personal injury.**

EXHAUST GAS (carbon monoxide)

⚠ WARNING

- **Do not breathe exhaust gases; they contain colorless and odorless carbon monoxide. Carbon monoxide is dangerous. It can cause unconsciousness or death.**
- **If you suspect that exhaust fumes are entering the vehicle, drive with all windows fully open, and have the vehicle inspected immediately.**
- **Do not run the engine in closed spaces such as a garage.**
- **Do not park the vehicle with the engine running for any extended length of time.**
- **Keep the rear vent windows, doors and trunk lids (if so equipped) closed while driving, otherwise exhaust gases could be drawn into the passenger compartment. If you must drive with one of these open, follow these precautions:**
  1. **Open all the windows.**
  2. **Turn the air recirculation mode off and set the fan speed control to the highest level to circulate the air.**
- **The exhaust system and body should be inspected by a qualified mechanic whenever:**
  a. **The vehicle is raised for service.**
  b. **You suspect that exhaust fumes are entering into the passenger compartment.**
  c. **You notice a change in the sound of the exhaust system.**
  d. **You have had an accident involving damage to the exhaust system, underbody, or rear of the vehicle.**

THREE-WAY CATALYST

The three-way catalyst is an emission control device installed in the exhaust system. Exhaust gases in the three-way catalyst are burned at high temperatures to help reduce pollutants.

⚠ WARNING

- **The exhaust gas and the exhaust system are very hot. Keep people, animals or flammable materials away from the exhaust system components.**
- **Do not stop or park the vehicle over flammable materials such as dry grass, waste paper or rags. They may ignite and cause a fire.**

⚠ CAUTION

- **Do not use leaded gasoline. Deposits from leaded gasoline will seriously reduce the three-way catalyst's ability to help reduce exhaust pollutants.**
- **Keep your engine tuned up. Malfunctions in the ignition, fuel injection, or electrical systems can cause over rich fuel flow into the three-way catalyst, causing it to overheat. Do not keep driving if the engine misfires, or if noticeable loss of performance or other unusual operating conditions are detected. Have the vehicle inspected promptly. It is recommended that you visit a NISSAN dealer for this service.**
- **Avoid driving with an extremely low fuel level. Running out of fuel could cause the engine to misfire, damaging the three-way catalyst.**
- **Do not race the engine while warming it up.**
- **Do not push or tow your vehicle to start the engine.**

TIRE PRESSURE MONITORING SYSTEM (TPMS) (if so equipped)

Each tire, including the spare (if provided), should be checked monthly when cold and inflated to the inflation pressure recommended by the vehicle manufacturer on the vehicle placard or tire inflation pressure label. (If your vehicle has tires of a different size than the size indicated on the vehicle placard or tire inflation pressure label, you should determine the proper tire inflation pressure for those tires.)

As an added safety feature, your vehicle has been equipped with a Tire Pressure Monitoring System (TPMS) that illuminates a low tire pressure telltale when one or more of your tires is significantly underinflated. Accordingly, when the low tire pressure telltale illuminates, you should stop and check your tires as soon as possible, and inflate them to the proper pressure. Driving on a significantly underinflated tire causes the tire to overheat and can lead to tire failure. Under-inflation also reduces fuel efficiency and tire tread life, and may affect the vehicle's handling and stopping ability.

Please note that the TPMS is not a substitute for proper tire maintenance, and it is the driver's responsibility to maintain correct tire pressure, even if under-inflation has not reached the level to trigger illumination of the TPMS low tire pressure telltale.

Your vehicle has also been equipped with a TPMS malfunction indicator to indicate when the system is not operating properly. The TPMS malfunction indicator is combined with the low tire pressure telltale. When the system detects a malfunction, the telltale will flash for approximately one minute and then remain continuously illuminated. This sequence will continue upon subsequent vehicle start-ups as long as the malfunction exists. When the malfunction indicator is illuminated, the system may not be able to detect or signal low tire pressure as intended. TPMS malfunctions may occur for a variety of reasons, including the installation of replacement or alternate tires or wheels on the vehicle that prevent the TPMS from functioning properly. Always check the TPMS malfunction telltale after replacing one or more tires or wheels on your vehicle to ensure that the replacement or alternate tires and wheels allow the TPMS to continue to function properly.

Additional information:

- When replacing a wheel without the TPMS such as the spare tire, the TPMS does not monitor the tire pressure of the spare tire.
- The TPMS will activate only when the vehicle is driven at speeds above 16 mph (25 km/h). Also, this system may not detect a sudden drop in tire pressure (for example, a flat tire while driving).
- The low tire pressure warning light does not automatically turn off when the tire pressure is adjusted for all four tires. After the tires are inflated to the recommended pressure, the vehicle must be driven at speeds above 16 mph (25 km/h) to activate the TPMS and turn off the low tire pressure warning light. Use a tire pressure gauge to check the tire pressure.
- The CHECK TIRE PRES (pressure) warning message is displayed in the odometer when the low tire pressure warning light is illuminated and low tire pressure is detected. The CHECK TIRE PRES warning message turns off when the low tire pressure warning light turns off.
- The CHECK TIRE PRES warning message is not displayed if the low tire pressure warning light illuminates to indicate a TPMS malfunction.
- Tire pressure rises and falls depending on the heat caused by the vehicle's operation and the outside temperature. Do not reduce the tire pressure after driving because the tire pressure rises after driving. Low outside temperature can lower the temperature of the air inside the tire which can cause a lower tire inflation pressure. This may cause the low tire pressure warning light to illuminate. If the warning light illuminates, check the tire pressure for all four tires.
- The Tire and Loading Information label is located in the driver's door opening.

For additional information, refer to "Low tire pressure warning light" in the "Instruments and controls" section and "Tire Pressure Monitoring System (TPMS)" in the "In case of emergency" section of this manual.

⚠ WARNING

- **Radio waves could adversely affect electric medical equipment. Those who use a pacemaker should contact the electric medical equipment manufacturer for the possible influences before use.**
- **If the low tire pressure warning light illuminates while driving, avoid sudden steering maneuvers or abrupt braking, reduce vehicle speed, pull off the road to a safe location and stop the vehicle as soon as possible. Driving with underinflated tires may permanently damage the tires and increase the likelihood of tire failure. Serious vehicle damage could occur and may lead to an accident and could result in serious personal injury. Check the tire pressure for all four tires. Adjust the tire pressure to the recommended COLD tire pressure shown on the Tire and Loading Information label, located on the driver's door opening, to turn the low tire pressure warning light off. If you have a flat tire, replace it with a spare tire as soon as possible. (For additional information, refer to "Flat tire" in the "In case of emergency" section of this manual.)**

- **When replacing a wheel without the TPMS such as the spare tire, when a spare tire is mounted or a wheel is replaced, the TPMS will not function and the low tire pressure warning light will flash for approximately 1 minute. The light will remain on after 1 minute. Have your tires replaced and/or TPMS system reset as soon as possible. It is recommended that you visit a NISSAN dealer for this service.**
- **Replacing tires with those not originally specified by NISSAN could affect the proper operation of the TPMS.**
- **Do not inject any tire liquid or aerosol tire sealant into the tires, as this may cause a malfunction of the tire pressure sensors.**

⚠ CAUTION

Do not place metalized film or any metal parts (antenna, etc.) on the windows. This may cause poor reception of the signals from the tire pressure sensors, and the TPMS will not function properly.

Some devices and transmitters may temporarily interfere with the operation of the TPMS and cause the low tire pressure warning light to illuminate.

Some examples are:

- Facilities or electric devices using similar radio frequencies are near the vehicle.
- If a transmitter set to similar frequencies is being used in or near the vehicle.
- If a computer (or similar equipment) or a DC/AC converter is being used in or near the vehicle.

The low tire pressure warning light may illuminate in the following cases:

- If the vehicle is equipped with a wheel and tire without TPMS.
- If the TPMS has been replaced and the ID has not been registered.
- If the wheel is not originally specified by NISSAN.

FCC Notice:

For USA:

This device complies with Part 15 of the FCC Rules. Operation is subject to the following two conditions: (1) This device may not cause harmful interference, and (2) this device must accept any interference received, including interference that may cause undesired operation.

NOTE:

Changes or modifications not expressly approved by the party responsible for compliance could void the user's authority to operate the equipment.

For Canada:

This device complies with Industry Canada licence-exempt RSS standard(s). Operation is subject to the following two conditions: (1) this device may not cause interference, and (2) this device must accept any interference, including interference that may cause undesired operation of the device.

For IC:

NOTE:

This device complies with Industry Canada's licence-exempt RSS. Operation is subject to the following two conditions:
(1) This device may not cause interference; and
(2) This device must accept any interference, including interference that may cause undesired operation of the device.

REMARQUE:

Le présent appareil est conforme aux CNR d'Industrie Canada applicables aux appareils radio exempts de licence. L'exploitation est autorisée aux deux conditions suivantes:
(1) l'appareil ne doit pas produire de brouillage;
(2) l'utilisateur de l'appareil doit accepter tout brouillage radioélectrique subi, même si le brouillage est susceptible d'en compromettre le fonctionnement.

⚠ WARNING

This equipment complies with IC radiation exposure limits set forth for an uncontrolled environment and meets RSS-102 of the IC radio frequency (RF) Exposure rules. This equipment has very low levels of RF energy that is deemed to comply without maximum permissive exposure evaluation (MPE). But it is desirable that it should be installed and operated keeping the radiator at least 20cm or more away from person's body.

ATTENTION:

Cet équipement est conforme aux limites d'exposition aux rayonnements énoncées pour un environnement non contrôlé et respecte les régles d'exposition aux fréquences radioélectriques (RF) CNR-102 de l'IC. Cet équipement émet une énergie RF trés faible qui est considérée comme conforme sans évaluation de l'exposition maximale autorisée (MPE).
Cependant, il est souhaitable qu'il devrait être installé et utilisé en gardant une distance de 20 cm ou plus entre le radiateur et le corps humain.

TPMS with Easy-Fill Tire Alert (if so equipped)

When adding air to an under-inflated tire, the TPMS with Easy-Fill Tire Alert provides visual and audible signals outside the vehicle to help you inflate the tires to the recommended COLD tire pressure.

Vehicle set-up:

1. Park the vehicle in a safe and level place.
2. Apply the parking brake and place the shift lever in the P (Park) position.
3. Place the ignition switch in the ON position. Do not start the engine.

Operation:

1. Add air to the tire.
2. After a few seconds, the hazard indicators will start flashing.
3. When the designated pressure is reached, the horn beeps once and the hazard indicators stop flashing.
4. Perform the above steps for each tire.
   - If the tire is over-inflated more than approximately 4 psi (30 kPa), the horn beeps and the hazard indicators flash three times. To correct the pres-

sure, push the core of the valve stem on the tire briefly to release pressure. When the pressure reaches the designated pressure, the horn beeps once.

- If the hazard indicator does not flash within approximately 15 seconds after starting to inflate the tire, it indicates that the Easy-Fill Tire Alert is not operating.
- The TPMS will not activate the Easy-Fill Tire Alert under the following conditions:
  - If there is interference from an external device or transmitter.
  - The air pressure from the inflation device is not sufficient to inflate the tire.
  - There is a malfunction in the TPMS.
  - There is a malfunction in the horn or hazard indicators.
  - The identification code of the tire pressure sensor is not registered to the system.
  - The battery of the tire pressure sensor is low.
- If the Easy-Fill Tire Alert does not operate due to TPMS interference, move the vehicle about 3 ft (1 m) backward or forward and try again.

If the Easy-Fill Tire Alert is not working, use a tire pressure gauge.

AVOIDING COLLISION AND ROLLOVER

⚠ WARNING

Failure to operate this vehicle in a safe and prudent manner may result in loss of control or an accident.

Be alert and drive defensively at all times. Obey all traffic regulations. Avoid excessive speed, high speed cornering, or sudden steering maneuvers, because these driving practices could cause you to lose control of your vehicle.

As with any vehicle, loss of control could result in a collision with other vehicles or objects or cause the vehicle to roll over, particularly if the loss of control causes the vehicle to slide sideways.

Be attentive at all times, and avoid driving when tired. Never drive when under the influence of alcohol or drugs (including prescription or over-the-counter drugs which may cause drowsiness). Always wear your seat belt as outlined in the "Safety – Seats, seat belts and supplemental restraint system" section of this manual, and also instruct your passengers to do so.

Seat belts help reduce the risk of injury in collisions and rollovers. **In a rollover crash, an unbelted or improperly belted person is significantly more likely to be injured or killed than a person properly wearing a seat belt.**

OFF-ROAD RECOVERY

While driving, the right side or left side wheels may unintentionally leave the road surface. If this occurs, maintain control of the vehicle by following the procedure below. Please note that this procedure is only a general guide. The vehicle must be driven as appropriate based on the conditions of the vehicle, road and traffic.

1. Remain calm and do not overreact.
2. Do not apply the brakes.
3. Maintain a firm grip on the steering wheel with both hands and try to hold a straight course.

4. When appropriate, slowly release the accelerator pedal to gradually slow the vehicle.
5. If there is nothing in the way, steer the vehicle to follow the road while vehicle speed is reduced. Do not attempt to drive the vehicle back onto the road surface until vehicle speed is reduced.
6. When it is safe to do so, gradually turn the steering wheel until both tires return to the road surface. When all tires are on the road surface, steer the vehicle to stay in the appropriate driving lane.
   - If you decide that it is not safe to return the vehicle to the road surface based on vehicle, road or traffic conditions, gradually slow the vehicle to a stop in a safe place off the road.

RAPID AIR PRESSURE LOSS

Rapid air pressure loss or a "blow-out" can occur if the tire is punctured or is damaged due to hitting a curb or pothole. Rapid air pressure loss can also be caused by driving on under-inflated tires.

Rapid air pressure loss can affect the handling and stability of the vehicle, especially at highway speeds.

Help prevent rapid air pressure loss by maintaining the correct air pressure and visually inspecting the tires for wear and damage. For additional information, refer to "Wheels and tires" in the "Do-it-yourself" section of this manual. If a tire rapidly loses air pressure or "blows-out" while driving, maintain control of the vehicle by following the procedure below. Please note that this procedure is only a general guide. The vehicle must be driven as appropriate based on the conditions of the vehicle, road and traffic.

⚠ WARNING

The following actions can increase the chance of losing control of the vehicle if there is a sudden loss of tire air pressure. Losing control of the vehicle may cause a collision and result in personal injury.

- **The vehicle generally moves or pulls in the direction of the flat tire.**
- **Do not rapidly apply the brakes.**
- **Do not rapidly release the accelerator pedal.**
- **Do not rapidly turn the steering wheel.**

1. Remain calm and do not overreact.
2. Maintain a firm grip on the steering wheel with both hands and try to hold a straight course.
3. When appropriate, slowly release the accelerator pedal to gradually slow the vehicle.
4. Gradually steer the vehicle to a safe location off the road and away from traffic if possible.
5. Lightly apply the brake pedal to gradually stop the vehicle.
6. Turn on the hazard warning flashers and contact a roadside emergency service to change the tire. For additional information, refer to "Changing a flat tire" in the "In case of emergency" section of this manual.

DRINKING ALCOHOL/DRUGS AND DRIVING

⚠ WARNING

Never drive under the influence of alcohol or drugs. Alcohol in the bloodstream reduces coordination, delays reaction time and impairs judgement. Driving after drinking alcohol increases the likelihood of being involved in an accident injuring yourself and others. Additionally, if you are injured in an accident, alcohol can increase the severity of the injury.

NISSAN is committed to safe driving. However, you must choose not to drive under the influence of alcohol. Every year thousands of people are injured or killed in alcohol-related collisions. Although the local laws vary on what is considered to be legally intoxicated, the fact is that alcohol affects all people differently and most people underestimate the effects of alcohol.

Remember, drinking and driving don't mix! That is true for drugs (over-the-counter, prescription) and illegal drugs, too. Don't drive if your ability to operate your vehicle is impaired by alcohol, drugs, or some other physical condition.

⚠ WARNING

- **Never remove the ignition key or place the ignition switch in the LOCK position while driving. The steering wheel will lock. This may cause the driver to lose control of the vehicle and could result in serious vehicle damage or personal injury.**

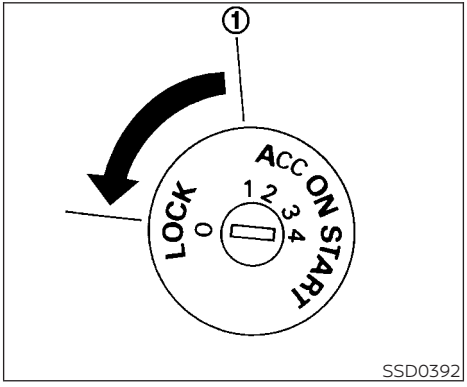

SSD0392

CONTINUOUSLY VARIABLE TRANSMISSION (if so equipped)

The ignition lock is designed so that the ignition switch cannot be turned to the LOCK position until the shift lever is moved to the P (Park) position.

- When placing the ignition switch in the LOCK position, make sure that the shift lever is in the P (Park) position.
- When removing the key from the ignition switch (if it is inserted), make sure that the shift lever is in the P (Park) position.

When the ignition switch cannot be placed in the LOCK position:

1. Move the shift lever to the P (Park) position.
2. Move the ignition switch slightly in the ON direction.
3. Turn the ignition switch to the LOCK position.
4. Remove the key if it is inserted in the ignition switch.

If the ignition switch is placed in the LOCK position, the shift lever cannot be moved from the P (Park) position.

The shift lever can be moved if the ignition switch is in the ON position and the foot brake pedal is depressed.

There is an OFF position ① between the LOCK and ACC positions. The OFF position is indicated by a "1" on the key cylinder.

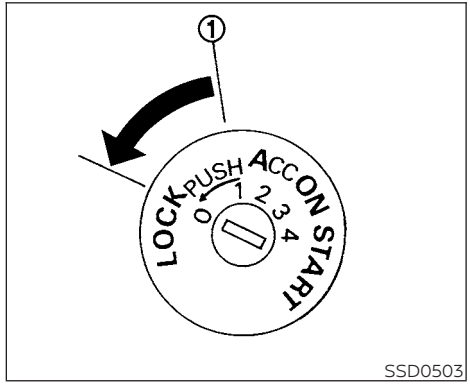

SSD0503

MANUAL TRANSMISSION (if so equipped)

The ignition switch includes a device that helps prevent accidental removal of the key while driving.

The key can only be removed when the ignition switch is in the LOCK position.

In order for the steering wheel to be locked, it must be turned about 1/8 of a turn clockwise from the straight up position.

To lock the steering wheel, place the ignition switch in the LOCK position. Remove the key. To unlock the steering wheel, insert the key and turn it gently while rotating the steering wheel slightly right and left.

IGNITION SWITCH POSITIONS

LOCK: Normal parking position (0)

OFF: (1)

The engine can be turned off without locking the steering wheel.

ACC: (Accessories) (2)

This position activates electrical accessories such as the radio when the engine is not running.

ON: Normal operating position (3)

This position turns on the ignition system and the electrical accessories.

START: (4)

This position starts the engine. As soon as the engine has started, release the key. It automatically returns to the ON position.

NISSAN VEHICLE IMMOBILIZER SYSTEM (if so equipped)

The NISSAN Vehicle Immobilizer System will not allow the engine to start without the use of the registered key.

If the engine fails to start using a registered key (for example, when interference is caused by another registered key, an automated toll road device or automatic payment device on the key ring), restart the engine using the following procedure:

1. Leave the ignition switch in the ON position for approximately 5 seconds.
2. Place the ignition switch in the OFF or LOCK position, and wait approximately 10 seconds.
3. Repeat steps 1 and 2.
4. Restart the engine while holding the device (which may have caused the interference) separate from the registered key.

If the no start condition re-occurs, NISSAN recommends placing the registered key on a separate key ring to avoid interference from other devices.

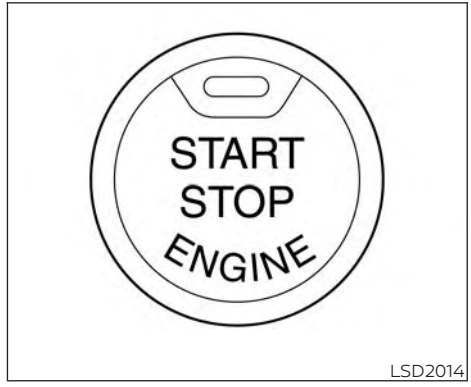

⚠ WARNING

Do not operate the push-button ignition switch while driving the vehicle except in an emergency. (The engine will stop when the ignition switch is pushed three consecutive times in quick succession or the ignition switch is pushed and held for more than 2 seconds.) If the engine stops while the vehicle is being driven, this could lead to a crash and serious injury.

When the ignition switch is pushed without depressing the brake pedal or the clutch pedal for manual transmission models (M/T), the ignition switch position will illuminate as follows:

Push center:

- Once to change to ACC.
- Two times to change to ON.
- Three times to return to OFF.

The ignition switch will automatically return to the LOCK position when any door is either opened or closed with the switch in the OFF position.

The ignition lock is designed so that the ignition switch position cannot be switched to OFF until the shift lever is moved to the P (Park) position or N (Neutral) position (M/T).

When the ignition switch cannot be pushed toward the OFF position, proceed as follows:

1. Move the shift lever to the P (Park) position or N (Neutral) position (M/T).
2. Push the ignition switch. The ignition switch position will change to the ON position.
3. Push the ignition switch again to the OFF position.

The shift lever can be moved from the P (Park) position if the ignition switch is in the ON position and the brake pedal is depressed.

If the battery of the vehicle is discharged, the push-button ignition switch cannot be moved from the LOCK position.

Some indicators and warnings for operation are displayed in the meter. For additional information, refer to "Warning lights, indicator lights and audible reminders" in the "Instruments and controls" section of this manual.

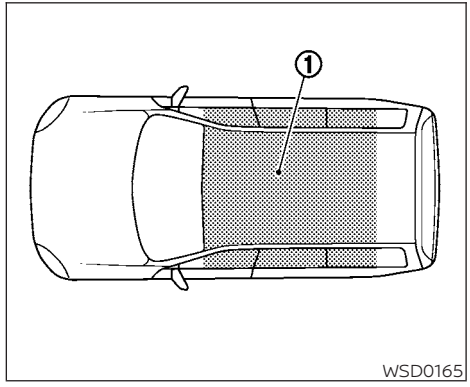

WSD0165

OPERATING RANGE

The Intelligent Key functions can only be used when the Intelligent Key is within the specified operating range.

When the Intelligent Key battery is almost discharged or strong radio waves are present near the operating location, the Intelligent Key system's operating range becomes narrower and may not function properly.

If the Intelligent Key is within the operating range, it is possible for anyone, even someone who does not carry the Intelligent Key, to turn the ignition switch to start the engine.

The operating range of the engine start function is inside of the vehicle ①.

- If the Intelligent Key is placed on the instrument panel, rear parcel shelf, inside the glove box, storage bin or door pocket, the Intelligent Key may not function.
- If the Intelligent Key is placed near the door or window outside the vehicle, the Intelligent Key may function.

PUSH-BUTTON IGNITION SWITCH POSITIONS

LOCK (Normal parking position)

The ignition switch can only be locked in this position.

The ignition switch will be unlocked when it is pushed to the ACC position while carrying the Intelligent Key or with the Intelligent Key inserted in the port.

The ignition switch will lock when any door is opened or closed with the ignition switched off.

OFF

The ignition switch is in the OFF position when the engine is turned off using the ignition switch. No lights will illuminate on the ignition switch.

ACC (Accessories)

This position activates electrical accessories, such as the radio, when the engine is not running.

ACC has a battery saver feature that will turn the ignition switch to the OFF position after 30 minutes under the following conditions:

- All doors are closed.
- The shift lever is in P (Park).

The battery saver feature will be canceled if any of the following occur:

- Any door is opened.
- The shift lever is moved out of the P (Park) position.
- The ignition switch changes position.

ON (Normal operating position)

This position turns on the ignition system and electrical accessories.

ON has a battery saver feature that will turn the ignition switch to the OFF position, if the vehicle is not running, after some time under the following conditions:

- All doors are closed.
- The shift lever is in P (Park).

The battery saver feature will be canceled if any of the following occur:

- Any door is opened.
- The shift lever is moved out of the P (Park) position.
- The ignition switch changes position.

⚠ CAUTION

Do not leave the vehicle with the ignition switch in the ACC or ON position when the engine is not running for an extended period. This can discharge the battery.

EMERGENCY ENGINE SHUT OFF

To shut off the engine in an emergency situation while driving, perform the following procedure:

- Rapidly push the ignition switch three consecutive times in less than 1.5 seconds, or
- Push and hold the ignition switch for more than 2 seconds.

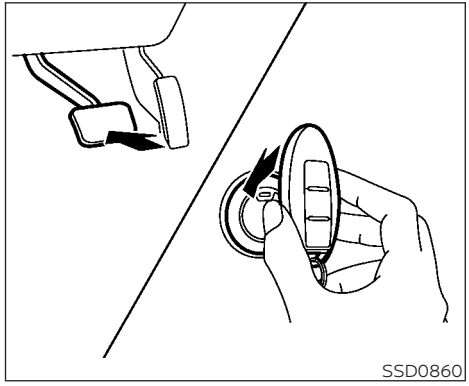

NISSAN INTELLIGENT KEY® BATTERY DISCHARGE (if so equipped)

If the battery of the NISSAN Intelligent Key® is discharged, or environmental conditions interfere with the Intelligent Key operation, start the engine according to the following procedure:

1. Move the shift lever to the P (Park) or N (Neutral) position.
2. Firmly apply the foot brake.
3. Touch the ignition switch with the NISSAN Intelligent Key® as illustrated. (A chime will sound.)
4. Push the ignition switch while depressing the brake pedal within 10 seconds after the chime sounds. The engine will start.

After step 3 is performed, when the ignition switch is pushed without depressing the brake pedal, the ignition switch position will change to ACC.

NOTE:

- **When the ignition switch is pushed to the ACC or ON position or the engine is started by the above procedures, the NISSAN Intelligent Key® warning light may blink in yellow (on the meter) even if the NISSAN Intelligent Key® is inside the vehicle. This is not a malfunction. To stop the warning light from blinking, touch the ignition switch with the NISSAN Intelligent Key® again.**

- **If the NISSAN Intelligent Key® warning light in the meter is blinking in green, replace the battery as soon as possible. For additional information, refer to "Battery replacement" in the "Do-it-yourself" section of this manual.**

NISSAN VEHICLE IMMOBILIZER SYSTEM (if so equipped)

The NISSAN Vehicle Immobilizer System will not allow the engine to start without the use of the registered key.

If the engine fails to start using a registered key (for example, when interference is caused by another registered key, an automated toll road device or automatic payment device on the key ring), restart the engine using the following procedure:

1. Leave the ignition switch in the ON position for approximately 5 seconds.
2. Place the ignition switch in the OFF or LOCK position, and wait approximately 10 seconds.
3. Repeat steps 1 and 2.
4. Restart the engine while holding the device (which may have caused the interference) separate from the registered key.

If the no start condition re-occurs, NISSAN recommends placing the registered key on a separate key ring to avoid interference from other devices.

- Make sure the area around the vehicle is clear.
- Check fluid levels such as engine oil, coolant, brake and clutch fluid (if so equipped), and windshield-washer fluid as frequently as possible, or at least whenever you refuel.
- Check that all windows and lights are clean.
- Visually inspect tires for their appearance and condition. Also check tires for proper inflation.
- Lock all doors.
- Position seat and adjust head restraints/headrests.
- Adjust inside and outside mirrors.
- Fasten seat belts and ask all passengers to do likewise.
- Check the operation of warning lights when the ignition switch is placed in the ON position. For additional information, refer to "Warning lights, indicator lights and audible reminders" in the "Instruments and controls" section of this manual.

1. Apply the parking brake.
2. **Continuously Variable Transmission model**

   Move the shift lever to P (Park) or N (Neutral). P (Park) is recommended.

   The shift lever cannot be moved out of P (Park) and into any of the other gear positions if the ignition switch is placed in the OFF position or if the key is removed from the ignition switch (if so equipped).

   The starter is designed not to operate if the shift lever is in any of the driving positions.

   Manual transmission model

   Depress the clutch pedal to the floor, move the shift lever to the N (Neutral) position, and crank the engine.

   The starter is designed not to operate unless the clutch pedal is fully depressed.

   The Intelligent Key (if so equipped) must be carried when operating the push-button ignition switch.

3. Crank the engine **with your foot off the accelerator pedal** by placing the ignition switch in the START position. Release the ignition switch when the engine starts. If the engine starts, but fails to run, repeat the above procedure.
   - If the engine is very hard to start in extremely cold weather or when restarting, depress the accelerator pedal a little (approximately 1/3 to the floor) and hold it and then crank the engine. Release the switch and the accelerator pedal when the engine starts.
   - If the engine is very hard to start because it is flooded, depress the accelerator pedal all the way to the floor and hold it. Crank the engine for 5-6 seconds. After cranking the engine, release the accelerator pedal. Crank the engine **with your foot off the accelerator pedal** by placing the ignition switch in the START position. Release the key when the engine starts. If the engine starts, but fails to run, repeat the above procedure.

⚠ CAUTION

Do not operate the starter for more than 15 seconds at a time. If the engine does not start, place the ignition switch in the OFF position and wait 10 seconds before cranking again, otherwise the starter could be damaged.

4. **Warm-up:**

   Allow the engine to idle for at least 30 seconds after starting. Do not race the engine while warming it up. Drive at a moderate speed for a short distance first, especially in cold weather.

NOTE:

Care should be taken to avoid situations that can lead to potential battery discharge and potential no-start conditions such as:

1. **Installation or extended use of electronic accessories that consume battery power when the engine is not running (phone chargers, GPS, DVD players, etc.).**
2. **The vehicle is not driven regularly and/or only driven short distances.**

In these cases, the battery may need to be charged to maintain battery health.

CONTINUOUSLY VARIABLE TRANSMISSION (CVT) (if so equipped)

⚠ WARNING

- **Do not depress the accelerator pedal while shifting from P (Park) or N (Neutral) to R (Reverse), D (Drive) or L (Low). Always depress the brake pedal until shifting is completed. Failure to do so could cause you to lose control and have an accident.**
- **Cold engine idle speed is high, so use caution when shifting into a forward or reverse gear before the engine has warmed up.**
- **Never shift to either the P (Park) or R (Reverse) position while the vehicle is moving forward and P (Park) or D (Drive) position while the vehicle is reversing. This could cause an accident or damage the transmission.**
- **Do not downshift abruptly on slippery roads. This may cause a loss of control.**

⚠ CAUTION

- **To avoid possible damage to your vehicle, when stopping the vehicle on an uphill grade, do not hold the vehicle by depressing the accelerator pedal. The foot brake should be used for this purpose.**
- **Except in an emergency, do not shift to the N (Neutral) position while driving. Coasting with the transmission in the N (Neutral) position may cause serious damage to the transmission.**

The CVT in your vehicle is electronically controlled to produce maximum power and smooth operation.

The recommended operating procedures for this transmission are shown on the following pages. Follow these procedures for maximum vehicle performance and driving enjoyment.

NOTE:

Engine power may be automatically reduced to protect the CVT if the engine speed increases quickly when driving on slippery roads or while being tested on some dynamometers.

Starting the vehicle

⚠ WARNING

- **Do not depress the accelerator pedal while shifting from P (Park) or N (Neutral) to R (Reverse), D (Drive) or L (Low). Always depress the brake pedal until shifting is completed. Failure to do so could cause you to lose control and have an accident.**
- **Cold engine idle speed is high, so use caution when shifting into a forward or reverse gear before the engine has warmed up.**
- **Do not downshift abruptly on slippery roads. This may cause a loss of control.**
- **Never shift to either the P (Park) or R (Reverse) position while the vehicle is moving forward and P (Park) or D (Drive) position while the vehicle is reversing. This could cause an accident or damage the transmission**
- **Except in an emergency, do not shift to the N (Neutral) position while driving. Coasting with the transmission in the N (Neutral) position may cause serious damage to the transmission.**

⚠ CAUTION

To avoid possible damage to your vehicle, when stopping the vehicle on an uphill grade, do not hold the vehicle by depressing the accelerator pedal. The foot brake should be used for this purpose.

1. After starting the engine, fully depress the foot brake pedal before moving the shift lever out of the P (Park) position.
2. Keep the foot brake pedal depressed and move the shift lever into a driving gear.
3. Release the foot brake, then gradually start the vehicle in motion.
4. Stop the vehicle completely before moving the shift lever into the P (Park) position.

The Continuously Variable Transmission is designed so the foot brake pedal MUST be depressed before shifting from P (Park) to any drive position while the ignition switch is in the ON position.

The shift lever cannot be moved out of P (Park) and into any of the other gear positions if the ignition switch is placed in the LOCK, OFF or ACC position or if the key is removed.

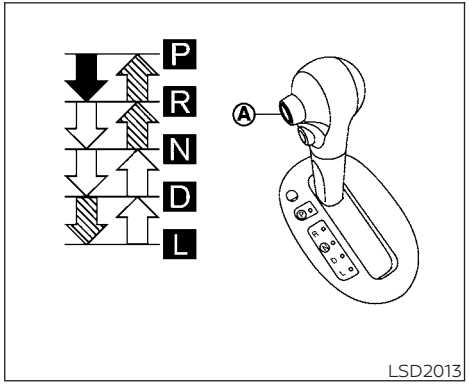

To move the shift lever:

- Press the button Ⓐ while depressing the brake pedal
- Press the button Ⓐ to shift
- Shift without pressing the button Ⓐ

Shifting

After starting the engine, fully depress the brake pedal and move the shift lever from P (Park) to any of the desired shift positions.

⚠ WARNING

Apply the parking brake if the shift lever is in any position while the engine is not running. Failure to do so could cause the vehicle to move unexpectedly or roll away and result in serious personal injury or property damage.

If the ignition switch is placed in the OFF or ACC position for any reason while the vehicle is in N (Neutral), or any drive position, the key cannot be turned to the LOCK position and be removed from the ignition switch. If this occurs, perform the following steps:

1. Apply the parking brake when the vehicle is stopped.
2. Move the shift lever into P (Park) to park the vehicle and place the ignition switch in the LOCK position to remove the key.

P (Park)

⚠ CAUTION

To prevent transmission damage, use the P (Park) position only when the vehicle is completely stopped.

Use the P (Park) shift lever position when the vehicle is parked or when starting the engine. Make sure the vehicle is completely stopped. **The brake pedal must be depressed and the shift lever button pressed in to move the shift lever from N (Neutral) or any drive position to P (Park).** Apply the parking brake. When parking on a hill, apply the parking brake first, then place the shift lever into the P (Park) position.

R (Reverse)

⚠ CAUTION

To prevent transmission damage, use the R (Reverse) position only when the vehicle is completely stopped.

Use the R (Reverse) position to back up. Make sure the vehicle is completely stopped before selecting the R (Reverse) position. R (Reverse) speed is limited to 30 mph (48 km/h). Do not exceed 30 mph (48 km/h) in the R (Reverse) position. **The brake pedal must be depressed and the shift lever button pressed in to move the shift lever from P (Park), N (Neutral) or any drive position to R (Reverse).**

N (Neutral)

Neither forward nor reverse gear is engaged. The engine can be started in this position. You may shift to N (Neutral) and restart a stalled engine while the vehicle is moving.

D (Drive)

Use this position for all normal forward driving.

L (Low)

Use this position for maximum engine braking on steep downhill gradients/climbing steep slopes and whenever approaching sharp bends. Do not use the L (Low) position in any other circumstances.

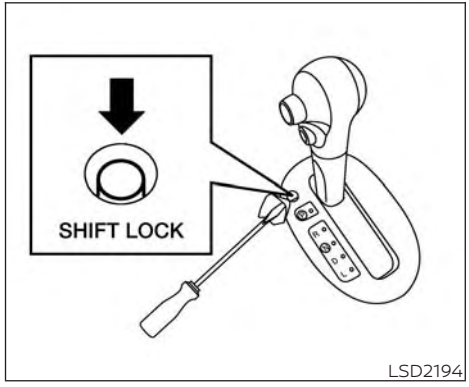

Shift lock release

If the battery is discharged, the shift lever may not be moved from the P (Park) position even with the foot brake pedal depressed.

To move the shift lever, perform the following procedure:

1. Place the ignition switch in the LOCK position and remove the key.
2. Apply the parking brake.
3. Using a protective cloth on the tip of a 3 mm screwdriver, remove the shift lock release cover.
   - If available, a plastic trim tool can also be used.
4. Push down the shift lock release using a suitable tool.
5. Press the shift lever button and move the shift lever to the N (Neutral) position while holding down the shift lock release.
6. Place the ignition switch in the ON position to unlock the steering wheel.
7. Release the parking brake.

The vehicle may be moved to the desired location.

Replace the removed shift lock release cover after the operation.

If the shift lever cannot be moved out of the P (Park) position, have the Continuously Variable Transmission system checked as soon as possible. It is recommended that you visit a NISSAN dealer for this service.

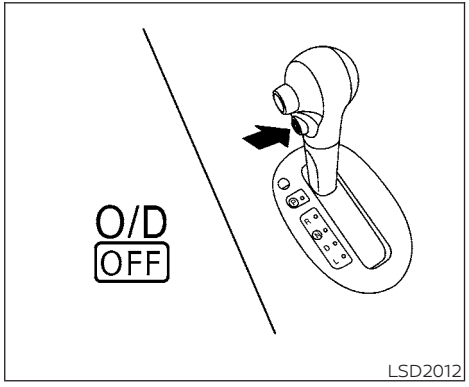

Overdrive (O/D) OFF switch (if so equipped)

When the O/D OFF switch is pushed with the shift lever in the D (Drive) position, the O/D OFF indicator light in the instrument panel illuminates. For additional information, refer to "Overdrive OFF indicator light" in the "Instruments and controls" section of this manual.
Use the overdrive OFF mode when you need improved engine braking.

To turn off the overdrive OFF mode, push the O/D OFF switch again. The O/D OFF indicator light will turn off.

Each time the engine is started, or when the shift lever is moved to any position other than D (Drive), the overdrive OFF mode will be automatically turned off.

Accelerator downshift — in D (Drive) position —

For passing or hill climbing, depress the accelerator pedal to the floor. This shifts the transmission down into a lower gear, depending on the vehicle speed.

Fail-safe

When the fail-safe operation occurs, the Continuously Variable Transmission will not be shifted into the selected driving position.

If the vehicle is driven under extreme conditions, such as excessive wheel spinning and subsequent hard braking, the fail-safe system may be activated. The Malfunction Indicator Light (MIL) may come on to indicate the fail-safe mode is activated. For additional information, refer to "Malfunction Indicator Light (MIL)" in the "Instruments and controls" section of this manual. This will occur even if all electrical circuits are functioning properly. In this case, place the ignition switch in the OFF position and wait for 10 seconds. Then place the ignition switch back in the ON position. The vehicle should return to its normal operating condition. If it does not return to its normal operating condition, have the transmission checked and repaired, if necessary. It is recommended that you visit a NISSAN dealer for this service.

⚠ WARNING

When the high fluid temperature protection mode or fail-safe operation occurs, vehicle speed may be gradually reduced. The reduced speed may be lower than other traffic, which could increase the chance of a collision. Be especially careful when driving. If necessary, pull to the side of the road at a safe place and allow the transmission to return to normal operation, or have it repaired if necessary.

MANUAL TRANSMISSION (if so equipped)

⚠ WARNING

- **Do not downshift abruptly on slippery roads. This may cause a loss of control.**
- **Do not over-rev the engine when shifting to a lower gear. This may cause a loss of control or engine damage.**

⚠ CAUTION

- **Do not rest your foot on the clutch pedal while driving. This may cause clutch damage.**
- **Fully depress the clutch pedal before shifting to help prevent transmission damage.**
- **Stop your vehicle completely before shifting into R (Reverse).**
- **When the vehicle is stopped with the engine running (for example, at a stop light), shift to N (Neutral) and release the clutch pedal with the foot brake applied.**

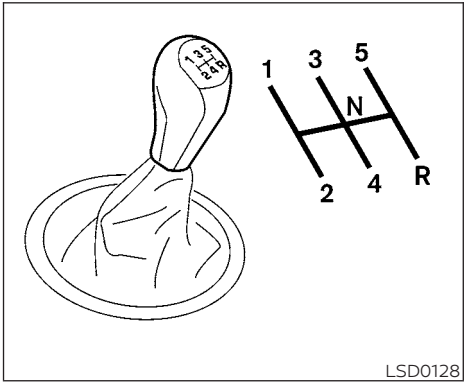

Shifting

To change gears, or when upshifting or downshifting, depress the clutch pedal fully, shift into the appropriate gear, then release the clutch slowly and smoothly.

To ensure smooth gear changes, fully depress the clutch pedal before operating the shift lever. If the clutch pedal is not fully depressed before the transmission is shifted, a gear noise may be heard. Transmission damage could occur.

Start the vehicle in the 1 (1st) position and shift to the 2 (2nd), 3 (3rd), 4 (4th) and 5 (5th) gear in sequence according to the vehicle speed.

You cannot shift directly from 5th gear into R (Reverse). First shift into N (Neutral), then into R (Reverse).

If it is difficult to move the shift lever into R (Reverse) or 1 (1st), shift into N (Neutral), then release the clutch pedal. Depress the clutch pedal again and shift into R (Reverse) or 1 (1st).

Suggested up-shift speeds

The following are suggested vehicle speeds for shifting into a higher gear. These suggestions relate to fuel economy and vehicle performance. Actual upshift speeds will vary according to road conditions, the weather and individual driving habits.

For normal acceleration in low altitude areas (less than 4,000 ft [1219 m]):

GEAR CHANGE	mph (km/h)
1st to 2nd	9 (14)
2nd to 3rd	12 (19)
3rd to 4th	21 (34)
4th to 5th	28 (45)
5th	—

For quick acceleration in low altitude areas and high altitude areas (over 4,000 ft [1219 m]):

Gear change	mph (km/h)
1st to 2nd	15 (24)
2nd to 3rd	25 (40)
3rd to 4th	40 (64)
4th to 5th	45 (72)
5th	—

Suggested maximum speed in each gear

Downshift to a lower gear if the engine is not running smoothly, or if you need to accelerate.

Do not exceed the maximum suggested speed (shown below) in any gear. For level road driving, use the highest gear suggested for that speed. Always observe posted speed limits, and drive according to the road conditions, which will ensure safe operation. Do not over-rev the engine when shifting to a lower gear as it may cause engine damage or loss of vehicle control.

GEAR	mph (km/h)
1st	29 (47)
2nd	53 (85)
3rd	78 (125)
4th	—
5th	—

⚠ WARNING

- **Be sure the parking brake is fully released before driving. Failure to do so can cause brake failure and lead to an accident.**
- **Do not release the parking brake from outside the vehicle.**
- **Do not use the shift lever in place of the parking brake. When parking, be sure the parking brake is fully engaged.**
- **To help avoid risk of injury or death through unintended operation of the vehicle and/or its systems, do not leave children, people who require the assistance of others or pets unattended in your vehicle. Additionally, the temperature inside a closed vehicle on a warm day can quickly become high enough to cause a significant risk of injury or death to people and pets.**

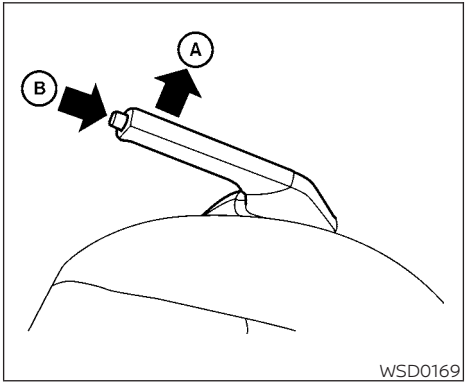

To engage: Pull the parking brake lever up Ⓐ.

To release:

1. Firmly apply the foot brake.
2. **Manual transmission models:**

   Place the shift lever in the N (Neutral) position.

   Continuously Variable Transmission models:

   Move the shift lever to the P (Park) position.
3. While pulling up on the parking brake lever slightly, press the button Ⓑ and lower the lever completely.
4. Before driving, be sure the brake warning light goes out.

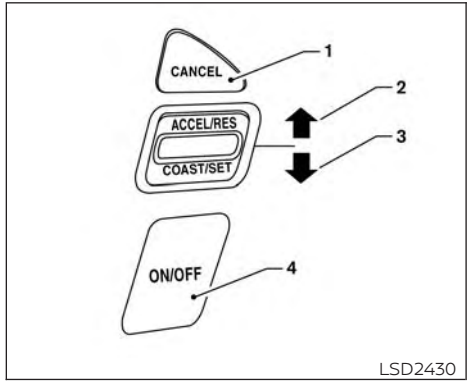

Type A (if so equipped)

PRECAUTIONS ON CRUISE CONTROL

1. CANCEL switch
2. ACCEL/RES switch
3. COAST/SET switch
4. ON/OFF switch

- If the cruise control system malfunctions, it cancels automatically.
- To properly set the cruise control system, use the following procedures.

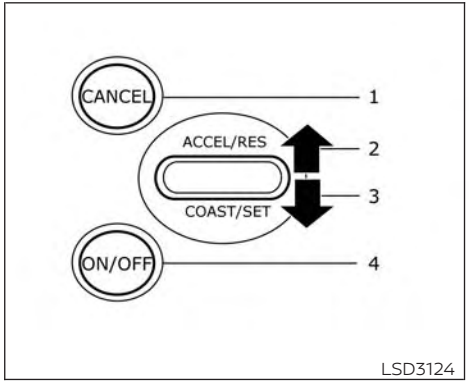

Type B (if so equipped)

⚠ WARNING

Do not use the cruise control when driving under the following conditions:

- **When it is not possible to keep the vehicle at a set speed.**
- **In heavy traffic or in traffic that varies in speed.**
- **On winding or hilly roads.**
- **On slippery roads (rain, snow, ice, etc.).**
- **In very windy areas.**

Doing so could cause a loss of vehicle control and result in an accident.

⚠ CAUTION

On manual transmission models, do not shift into N (Neutral) without depressing the clutch pedal when the cruise control is set. Should this occur, depress the clutch pedal and turn the ON/OFF switch off immediately. Failure to do so may cause engine damage.

CRUISE CONTROL OPERATIONS

The cruise control allows driving at a speed between 25 - 89 mph (40 - 144 km/h) without keeping your foot on the accelerator pedal.

To turn on the cruise control, push the ON/OFF switch. The CRUISE indicator light in the instrument panel comes on.

To set cruising speed, accelerate the vehicle to the desired speed, push the COAST/SET switch and release it. The SET indicator light in the instrument panel comes on. Take your foot off the accelerator pedal. Your vehicle maintains the set speed.

- **To pass another vehicle,** depress the accelerator pedal. When you release the pedal, the vehicle returns to the previously set speed.
- The vehicle may not maintain the set speed when going up or down steep hills. If this happens, drive without the cruise control.

To cancel the preset speed, use one of the following three methods:

- Push the CANCEL switch; the CRUISE indicator light in the instrument panel goes out.
- Tap the brake pedal; the CRUISE indicator light goes out.
- Push the ON/OFF switch. The CRUISE indicator light in the instrument panel goes out.

The cruise control is automatically canceled and the CRUISE indicator light in the instrument panel goes out if:

- You depress the brake or clutch pedal while pushing the ACCEL/RES or COAST/SET switch. The preset speed is deleted from memory.
- The vehicle slows down more than 8 mph (13 km/h) below the set speed.
- You depress the clutch pedal (Manual Transmission models), or move the shift lever to N (Neutral) (Continuously Variable Transmission models).

To reset at a faster cruising speed, use one of the following three methods:

- Depress the accelerator pedal. When the vehicle attains the desired speed, push and release the COAST/SET switch.
- Push and hold the ACCEL/RES switch. When the vehicle attains the speed you desire, release the switch.
- Push and release the ACCEL/RES switch. Each time you do this, the set speed increases by about 1 mph (1.6 km/h).

To reset at a slower cruising speed, use one of the following three methods:

- Lightly tap the brake pedal. When the vehicle attains the desired speed, push the COAST/SET switch and release it.
- Push and hold the COAST/SET switch. Release the switch when the vehicle slows to the desired speed.
- Push and release the COAST/SET switch. Each time you do this, the set speed decreases by about 1 mph (1.6 km/h).

To resume the preset speed, push and release the ACCEL/RES switch. The vehicle returns to the last set cruising speed when the vehicle speed is over 25 mph (40 km/h).

⚠ CAUTION

During the first 1,200 miles (2,000 km), follow these recommendations to obtain maximum engine performance and ensure the future reliability and economy of your new vehicle. Failure to follow these recommendations may result in shortened engine life and reduced engine performance.

- Avoid driving for long periods at constant speed, either fast or slow, and do not run the engine over 4,000 rpm.
- Do not accelerate at full throttle in any gear.
- Avoid quick starts.
- Avoid hard braking as much as possible.

FUEL EFFICIENT DRIVING TIPS

Follow these easy-to-use Fuel Efficient Driving Tips to help you achieve the most fuel economy from your vehicle.

1. **Use Smooth Accelerator and Brake Pedal Application**
   - Avoid rapid starts and stops.
   - Use smooth, gentle accelerator and brake application whenever possible.
   - Maintain constant speed while commuting and coast whenever possible.
2. **Maintain Constant Speed**
   - Look ahead to try and anticipate and minimize stops.
   - Synchronizing your speed with traffic lights allows you to reduce your number of stops.
   - Maintaining a steady speed can minimize red light stops and improve fuel efficiency.
3. **Use Air Conditioning (A/C) at Higher Vehicle Speeds**
   - Below 40 mph (64 km/h), it is more efficient to open windows to cool the vehicle due to reduced engine load.
   - Above 40 mph (64 km/h), it is more efficient to use A/C to cool the vehicle due to increased aerodynamic drag.
   - Recirculating the cool air in the cabin when the A/C is on reduces cooling load.
4. **Drive at Economical Speeds and Distances**
   - Observing the speed limit and not exceeding 60 mph (97 km/h) (where legally allowed) can improve fuel efficiency due to reduced aerodynamic drag.
   - Maintaining a safe following distance behind other vehicles reduces unnecessary braking.
   - Safely monitoring traffic to anticipate changes in speed permits reduced braking and smooth acceleration changes.
   - Select a gear range suitable to road conditions.
5. **Use Cruise Control**
   - Using cruise control during highway driving helps maintain a steady speed.
   - Cruise control is particularly effective in providing fuel savings when driving on flat terrains.
6. **Plan for the Shortest Route**
   - Utilize a map or navigation system to determine the best route to save time.
7. **Avoid Idling**
   - Shutting off your engine when safe for stops exceeding 30–60 seconds saves fuel and reduces emissions.
8. **Buy an Automated Pass for Toll Roads**
   - Automated passes permit drivers to use special lanes to maintain cruising speed through the toll and avoid stopping and starting.
9. **Winter Warm Up**
   - Limit idling time to minimize impact to fuel economy.
   - Vehicles typically need no more than 30 seconds of idling at start-up to effectively circulate the engine oil before driving.

- Your vehicle will reach its ideal operating temperature more quickly while driving versus idling.

10. **Keeping your Vehicle Cool**
    - Park your vehicle in a covered parking area or in the shade whenever possible.
    - When entering a hot vehicle, opening the windows will help to reduce the inside temperature faster, resulting in reduced demand on your A/C system.

- Keep your engine tuned up.
- Follow the recommended scheduled maintenance.
- Keep the tires inflated to the correct pressure. Low tire pressure increases tire wear and lowers fuel economy.
- Keep the wheels in correct alignment. Improper alignment increases tire wear and lowers fuel economy.
- Use the recommended viscosity engine oil. For additional information, refer to "Engine oil and oil filter recommendations" in the "Technical and consumer information" section of this manual.

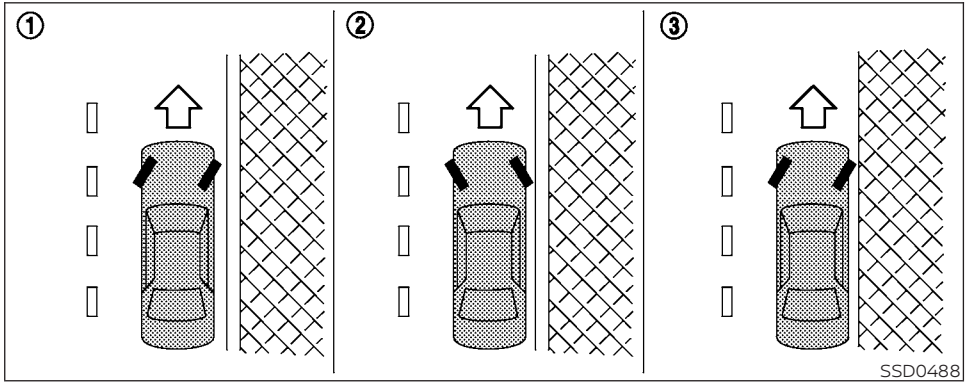

⚠ WARNING

- **Do not stop or park the vehicle over flammable materials such as dry grass, waste paper or rags. They may ignite and cause a fire.**

- **Safe parking procedures require that both the parking brake be set and the transmission placed into P (Park) for Continuously Variable Transmission (CVT) models or in an appropriate gear for manual transmission (M/T) models. Failure to do so could cause the vehicle to move unexpectedly or roll away and result in an accident. Make sure the shift lever has been pushed as far forward as it can go and cannot be moved without depressing the foot brake pedal.**

- **Never leave the engine running while the vehicle is unattended.**
- **To help avoid risk of injury or death through unintended operation of the vehicle and/or its systems, do not leave children, people who require the assistance of others or pets unattended in your vehicle. Additionally, the temperature inside a closed vehicle on a warm day can quickly become high enough to cause a significant risk of injury or death to people and pets.**

1. Firmly apply the parking brake.
2. **M/T models**

   Place the shift lever in the R (Reverse) position. When parking on an uphill grade, place the shift lever in 1st gear.

   CVT models

   Move the shift lever into the P (Park) position.
3. To help prevent the vehicle from rolling into traffic when parked on an incline, it is a good practice to turn the wheels as illustrated.

- HEADED DOWNHILL WITH CURB ①:

  Turn the wheels into the curb and move the vehicle forward until the curb side wheel gently touches the curb.

- HEADED UPHILL WITH CURB ②:

  Turn the wheels away from the curb and move the vehicle back until the curb side wheel gently touches the curb.

- HEADED UPHILL OR DOWNHILL, NO CURB ③:

  Turn the wheels toward the side of the road so the vehicle will move away from the center of the road if it moves.

4. Place the ignition switch in the LOCK position and remove the key.

⚠ WARNING

- **If the engine is not running or is turned off while driving, the power assist for the steering will not work. Steering will be harder to operate.**
- **When the power steering warning light illuminates with the engine running, there will be no power assist for the steering. You will still have control of the vehicle, but the steering will be harder to operate. Have the power steering system checked. It is recommended that you visit a NISSAN dealer for this service.**

The power steering system is designed to provide power assist while driving to operate the steering wheel with light force.

When the steering wheel is operated repeatedly or continuously while parking or driving at a very low speed, the power assist for the steering wheel will be reduced. This is to prevent overheating of the power steering system and protect it from getting damaged. While the power assist is reduced, steering wheel operation will become heavy. When the temperature of the power steering system goes down, the power assist level will return to normal. Avoid repeating such steering wheel operations that could cause the power steering system to overheat.

You may hear a sound when the steering wheel is operated quickly. However, this is not a malfunction.

If the power steering warning light illuminates while the engine is running, it may indicate the power steering system is not functioning properly and may need servicing. Have the power steering system checked. It is recommended that you visit a NISSAN dealer for this service.

When the power steering warning light illuminates with the engine running, there will be no power assist for the steering, but you will still have control of the vehicle. At this time, greater steering effort is required to operate the steering wheel, especially in sharp turns and at low speeds.

For additional information, refer to "Power steering warning light" in the "Instruments and controls" section of this manual.

The brake system has two separate hydraulic circuits. If one circuit malfunctions, you will still have braking at two wheels.

BRAKE PRECAUTIONS

Vacuum assisted brakes

The brake booster aids braking by using engine vacuum. If the engine stops, you can stop the vehicle by depressing the brake pedal. However, greater foot pressure on the brake pedal will be required to stop the vehicle and stopping distance will be longer.

Using the brakes

Avoid resting your foot on the brake pedal while driving. This will overheat the brakes, wear out the brake pads faster, and reduce gas mileage.

To help reduce brake wear and to prevent the brakes from overheating, reduce speed and downshift to a lower gear before going down a slope or long grade. Overheated brakes may reduce braking performance and could result in loss of vehicle control.

⚠ WARNING

- **While driving on a slippery surface, be careful when braking, accelerating or downshifting. Abrupt braking or accelerating could cause the wheels to skid and result in an accident.**
- **If the engine is not running or is turned off while driving, the power assist for the brakes will not work. Braking will be harder.**

Wet brakes

When the vehicle is washed or driven through water, the brakes may get wet. As a result, your braking distance will be longer and the vehicle may pull to one side during braking.

To dry the brakes, drive the vehicle at a safe speed while lightly pressing the brake pedal to heat up the brakes. Do this until the brakes return to normal. Avoid driving the vehicle at high speeds until the brakes function correctly.

Parking brake break-in

Break in the parking brake shoes whenever the stopping effect of the parking brake is weakened or whenever the brake shoes and/or drums/rotors are replaced, in order to assure the best brake performance.

This procedure is described in the vehicle service manual. It is recommended that you visit a NISSAN dealer for this service.

ANTI-LOCK BRAKING SYSTEM (ABS)

⚠ WARNING

- **The ABS is a sophisticated device, but it cannot prevent accidents resulting from careless or dangerous driving techniques. It can help maintain vehicle control during braking on slippery surfaces. Remember that stopping distances on slippery surfaces will be longer than on normal surfaces even with ABS. Stopping distances may also be longer on rough, gravel or snow covered roads, or if you are using tire chains. Always maintain a safe distance from the vehicle in front of you. Ultimately, the driver is responsible for safety.**
- **Tire type and condition may also affect braking effectiveness.**
  - **When replacing tires, install the specified size of tires on all four wheels.**

- **When installing a spare tire, make sure that it is the proper size and type as specified on the Tire and Loading Information label. For additional information, refer to "Tire and Loading Information label" in the "Technical and consumer information" section of this manual.**
- **For additional information, refer to "Wheels and tires" in the "Do-it-yourself" section of this manual.**

The ABS controls the brakes so the wheels do not lock during hard braking or when braking on slippery surfaces. The system detects the rotation speed at each wheel and varies the brake fluid pressure to prevent each wheel from locking and sliding. By preventing each wheel from locking, the system helps the driver maintain steering control and helps to minimize swerving and spinning on slippery surfaces.

Using the system

Depress the brake pedal and hold it down. Depress the brake pedal with firm steady pressure, but do not pump the brakes. The Anti-lock Braking System will operate to prevent the wheels from locking up. Steer the vehicle to avoid obstacles.

⚠ WARNING

Do not pump the brake pedal. Doing so may result in increased stopping distances.

Self-test feature

The Anti-lock Braking System (ABS) includes electronic sensors, electric pumps, hydraulic solenoids and a computer. The computer has a built-in diagnostic feature that tests the system each time you start the engine and move the vehicle at a low speed in forward or reverse. When the self-test occurs, you may hear a "clunk" noise and/or feel a pulsation in the brake pedal. This is normal and does not indicate a malfunction. If the computer senses a malfunction, it switches the ABS off and illuminates the ABS warning light on the instrument panel. The brake system then operates normally but without anti-lock assistance.

If the ABS warning light illuminates during the self-test or while driving, have the vehicle checked. It is recommended that you visit a NISSAN dealer for this service.

Normal operation

The Anti-lock Braking System (ABS) operates at speeds above 3 - 6 mph (5 - 10 km/h). The speed varies according to road conditions.

When the ABS senses that one or more wheels are close to locking up, the actuator rapidly applies and releases hydraulic pressure. This action is similar to pumping the brakes very quickly. You may feel a pulsation in the brake pedal and hear a noise from under the hood or feel a vibration from the actuator when it is operating. This is normal and indicates that the ABS is operating properly. However, the pulsation may indicate that road conditions are hazardous and extra care is required while driving.

BRAKE ASSIST

When the force applied to the brake pedal exceeds a certain level, the Brake Assist is activated generating greater braking force than a conventional brake booster even with light pedal force.

⚠ WARNING

The Brake Assist is only an aid to assist braking operation and is not a collision warning or avoidance device. It is the driver's responsibility to stay alert, drive safely and be in control of the vehicle at all times.

VEHICLE DYNAMIC CONTROL (VDC) SYSTEM

The VDC system uses various sensors to monitor driver inputs and vehicle motion. Under certain driving conditions, the VDC system helps to perform the following functions:

- Controls brake pressure to reduce wheel slip on one slipping drive wheel so power is transferred to a non-slipping drive wheel on the same axle.
- Controls brake pressure and engine output to reduce drive wheel slip based on vehicle speed (traction control function).
- Controls brake pressure at individual wheels and engine output to help the driver maintain control of the vehicle in the following conditions:
  - Understeer (vehicle tends to not follow the steered path despite increased steering input)
  - Oversteer (vehicle tends to spin due to certain road or driving conditions)

The VDC system can help the driver to maintain control of the vehicle, but it cannot prevent loss of vehicle control in all driving situations.

When the VDC system operates, the indicator light in the instrument panel flashes so note the following:

- The road may be slippery or the system may determine some action is required to help keep the vehicle on the steered path.
- You may feel a pulsation in the brake pedal and hear a noise or vibration from under the hood. This is normal and indicates that the VDC system is working properly.
- Adjust your speed and driving to the road conditions.

For additional information, refer to "Slip indicator light" and "Vehicle Dynamic Control (VDC) OFF indicator light" in the "Instruments and controls" section of this manual.

If a malfunction occurs in the system, the indicator light comes on in the instrument panel. The VDC system automatically turns off when these indicator lights are on.

The VDC OFF switch is used to turn off the VDC system. The OFF indicator light illuminates to indicate the VDC system is off.

When the VDC switch is used to turn off the system, the VDC system still operates to

prevent one drive wheel from slipping by transferring power to a non-slipping drive wheel. The indicator light flashes if this occurs. All other VDC functions are off and the indicator light will not flash. The VDC system is automatically reset to on when the ignition switch is placed in the OFF position then back to the ON position.

The computer has a built-in diagnostic feature that tests the system each time you start the engine and move the vehicle forward or in reverse at a slow speed. When the self-test occurs, you may hear a clunk noise and/or feel a pulsation in the brake pedal. This is normal and is not an indication of a malfunction.

WARNING

- **The VDC system is designed to help the driver maintain stability but does not prevent accidents due to abrupt steering operation at high speeds or by careless or dangerous driving techniques. Reduce vehicle speed and be especially careful when driving and cornering on slippery surfaces and always drive carefully.**
- **Do not modify the vehicle's suspension. If suspension parts such as shock absorbers, struts, springs, stabilizer bars, bushings and wheels are not NISSAN recommended for your vehicle or are extremely deteriorated, the VDC system may not operate properly. This could adversely affect vehicle handling performance, and the indicator light may flash or the OFF indicator light may illuminate.**
- **If brake related parts such as brake pads, rotors and calipers are not NISSAN recommended or are extremely deteriorated, the VDC system may not operate properly and both the and the OFF indicator lights may illuminate.**
- **If engine control related parts are not NISSAN recommended or are extremely deteriorated, both the and OFF indicator lights may illuminate.**
- **When driving on extremely inclined surfaces such as higher banked corners, the VDC system may not operate properly and the indicator light may flash or the OFF indicator light may illuminate. Do not drive on these types of roads.**
- **When driving on an unstable surface such as a turntable, ferry, elevator or ramp, the indicator light may flash or the OFF indicator light may illuminate. This is not a malfunction. Restart the engine after driving onto a stable surface.**
- **If wheels or tires other than the NISSAN recommended ones are used, the VDC system may not operate properly and the indicator light may flash or the OFF indicator light may illuminate.**
- **The VDC system is not a substitute for winter tires or tire chains on a snow covered road.**

BRAKE FORCE DISTRIBUTION

During braking while driving through turns, the system optimizes the distribution of force to each of the four wheels depending on the radius of the turn.

WARNING

- **The VDC system is designed to help the driver maintain stability but does not prevent accidents due to abrupt steering operation at high speeds or by careless or dangerous driving techniques. Reduce vehicle speed and be especially careful when driving and cornering on slippery surfaces and always drive carefully.**
- **Do not modify the vehicle's suspension. If suspension parts such as shock absorbers, struts, springs, stabilizer bars, bushings and wheels are not NISSAN recommended for your vehicle or are extremely deteriorated, the VDC system may not operate properly. This could adversely affect vehicle handling performance, and the indicator light may flash or the OFF indicator light may illuminate.**
- **If brake related parts such as brake pads, rotors and calipers are not NISSAN recommended or are extremely deteriorated, the VDC system may not operate properly and both the and OFF indicator lights may illuminate.**
- **If engine control related parts are not NISSAN recommended or are extremely deteriorated, both the and the OFF indicator lights may illuminate.**
- **When driving on extremely inclined surfaces such as higher banked corners, the VDC system may not operate properly and the indicator light may flash or the OFF indicator light may illuminate. Do not drive on these types of roads.**
- **When driving on an unstable surface such as a turntable, ferry, elevator or ramp, the indicator light may flash or the OFF indicator light may illuminate. This is not a malfunction. Restart the engine after driving onto a stable surface.**
- **If wheels or tires other than the NISSAN recommended ones are used, the VDC system may not operate properly and the indicator light may flash or the OFF indicator light may illuminate.**
- **The VDC system is not a substitute for winter tires or tire chains on a snow covered road.**

FREEING A FROZEN DOOR LOCK

To prevent a door lock from freezing, apply de-icer through the key hole. If the lock becomes frozen, heat the key before inserting it into the key hole, or use the remote keyless entry key fob or the NISSAN Intelligent Key®.

ANTIFREEZE

In the winter when it is anticipated that the temperature will drop below 32°F (0°C), check the antifreeze to assure proper winter protection. For additional information, refer to "Engine cooling system" in the "Do-it-yourself" section of this manual.

BATTERY

If the battery is not fully charged during extremely cold weather conditions, the battery fluid may freeze and damage the battery. To maintain maximum efficiency, the battery should be checked regularly. This vehicle is equipped with a sealed maintenance free battery. It is recommended that you visit a NISSAN dealer for service.

DRAINING OF COOLANT WATER

If the vehicle is to be left outside without antifreeze, drain the cooling system, including the engine block. Refill before operating the vehicle. For additional information, refer to "Changing engine coolant" in the "Do-it-yourself" section of this manual.

TIRE EQUIPMENT

1. SUMMER tires have a tread designed to provide superior performance on dry pavement. However, the performance of these tires will be substantially reduced in snowy and icy conditions. If you operate your vehicle on snowy or icy roads, NISSAN recommends the use of MUD & SNOW or ALL SEASON TIRES on all four wheels. It is recommended that you visit a NISSAN dealer for the tire type, size, speed rating and availability information.
2. For additional traction on icy roads, studded tires may be used. However, some U.S. states and Canadian provinces prohibit their use. Check local, state and provincial laws before installing studded tires.

Skid and traction capabilities of studded snow tires on wet or dry surfaces may be poorer than that of non-studded snow tires.

3. Tire chains may be used. For additional information, refer to "Tire chains" in the "Do-it-yourself" section of this manual.

SPECIAL WINTER EQUIPMENT

It is recommended that the following items be carried in the vehicle during winter:

- A scraper and stiff-bristled brush to remove ice and snow from the windows and wiper blades.
- A sturdy, flat board to be placed under the jack to give it firm support.
- A shovel to dig the vehicle out of snowdrifts.
- Extra washer fluid to refill the windshield-washer fluid reservoir.

DRIVING ON SNOW OR ICE

⚠ WARNING

- **Wet ice (32°F, 0°C and freezing rain), very cold snow or ice can be slick and very hard to drive on. The vehicle will have much less traction or "grip" under these conditions. Try to avoid driving on wet ice until the road is salted or sanded.**
- **Whatever the condition, drive with caution. Accelerate and slow down with care. If accelerating or downshifting too fast, the drive wheels will lose even more traction.**
- **Allow more stopping distance under these conditions. Braking should be started sooner than on dry pavement.**
- **Allow greater following distances on slippery roads.**
- **Watch for slippery spots (glare ice). These may appear on an otherwise clear road in shaded areas. If a patch of ice is seen ahead, brake before reaching it. Try not to brake while on the ice, and avoid any sudden steering maneuvers.**
- **Do not use the cruise control (if so equipped) on slippery roads.**
- **Snow can trap dangerous exhaust gases under your vehicle. Keep snow clear of the exhaust pipe and from around your vehicle.**

ENGINE BLOCK HEATER (if so equipped)

Engine block heaters are used to assist with cold temperature starting.

The engine block heater should be used when the outside temperature is 20°F (-7°C) or lower.

⚠ WARNING

- **Do not use your engine block heater with an ungrounded electrical system or a 2-pronged adapter. You can be seriously injured by an electrical shock if you use an ungrounded connection.**
- **Disconnect and properly store the engine block heater cord before starting the engine. Damage to the cord could result in an electrical shock and can cause serious injury.**
- **Use a heavy-duty 3-wire, 3-pronged extension cord rated for at least 10 A. Plug the extension cord into a Ground Fault Interrupt (GFI) protected, grounded 110-VAC outlet. Failure to use the proper extension cord or a grounded outlet can result in a fire or electrical shock and cause serious personal injury.**

To use the engine block heater:

1. Turn the engine off.
2. Open the hood and unwrap the engine block heater cord.
3. Plug the engine block heater cord into a grounded 3-wire, 3-pronged extension cord.
4. Plug the extension cord into a Ground Fault Interrupt (GFI) protected, grounded 110-volt AC (VAC) outlet.
5. The engine block heater must be plugged in for at least 2 - 4 hours, depending on outside temperatures, to properly warm the engine coolant. Use an appropriate timer to turn the engine block heater on.
6. Before starting the engine, unplug and properly store the cord to keep it away from moving parts.

MEMO

6 In case of emergency

Hazard warning flasher switch 6-2
Emergency engine shut off
(push-button ignition models only) 6-2
Flat tire 6-3
Tire Pressure Monitoring System
(TPMS) (if so equipped). 6-3
Changing a flat tire 6-3
Jump starting 6-12
Push starting 6-14
If your vehicle overheats. 6-14
Towing your vehicle 6-15
Towing recommended by NISSAN 6-15
Vehicle recovery
(freeing a stuck vehicle). 6-17

HAZARD WARNING FLASHER SWITCH

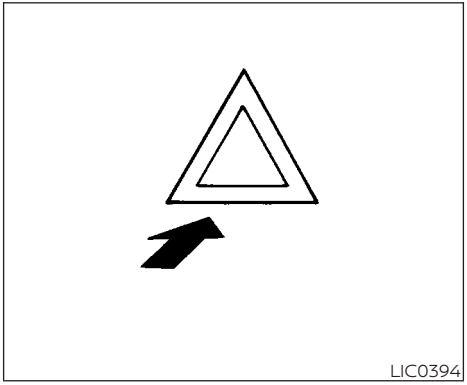

Push the switch on to warn other drivers when you must stop or park under emergency conditions. All turn signal lights flash.

⚠ WARNING

- **If stopping for an emergency, be sure to move the vehicle well off the road.**
- **Do not use the hazard warning flashers while moving on the highway unless unusual circumstances force you to drive so slowly that your vehicle might become a hazard to other traffic.**
- **Turn signals do not work when the hazard warning flasher lights are on.**

The flashers will operate with the ignition switch placed in any position.

Some jurisdictions may prohibit the use of the hazard warning flasher switch while driving.

EMERGENCY ENGINE SHUT OFF (push-button ignition models only)

To shut off the engine in an emergency situation while driving, perform the following procedure:

- Rapidly push the push-button ignition switch three consecutive times in less than 1.5 seconds, or
- Push and hold the push-button ignition switch for more than 2 seconds.

TIRE PRESSURE MONITORING SYSTEM (TPMS) (if so equipped)

This vehicle is equipped with the Tire Pressure Monitoring System (TPMS). It monitors tire pressure of all tires except the spare. When the low tire pressure warning light is lit, and the CHECK TIRE PRES (pressure) warning message is displayed in the odometer, one or more of your tires is significantly under-inflated. If the vehicle is being driven with low tire pressure, the TPMS will activate and warn you of it by the low tire pressure warning light. This system will activate only when the vehicle is driven at speeds above 16 mph (25 km/h). For additional information, refer to "Warning lights, indicator lights and audible reminders" in the "Instruments and controls" section, and "Tire Pressure Monitoring System (TPMS)" in the "Starting and driving" section of this manual.

⚠ WARNING

- **Radio waves could adversely affect electric medical equipment. Those who use a pacemaker should contact the electric medical equipment manufacturer for the possible influences before use.**
- **If the low tire pressure warning light illuminates while driving, avoid sudden steering maneuvers or abrupt braking, reduce vehicle speed, pull off the road to a safe location and stop the vehicle as soon as possible. Driving with under-inflated tires may permanently damage the tires and increase the likelihood of tire failure. Serious vehicle damage could occur and may lead to an accident and could result in serious personal injury. Check the tire pressure for all four tires. Adjust the tire pressure to the recommended COLD tire pressure shown on the Tire and Loading Information label to turn the low tire pressure warning light OFF. If you have a flat tire, replace it with a spare tire as soon as possible.**
- **When replacing a wheel without TPMS such as the spare tire, TPMS will not function and the low tire pressure warning light will flash for approximately 1 minute. The light will remain on after 1 minute. Have your tires replaced and/or TPMS system reset as soon as possible. It is recommended that you visit a NISSAN dealer for these services.**
- **Do not inject any tire liquid or aerosol tire sealant into the tires, as this may cause a malfunction of the tire pressure sensors.**
- **Replacing tires with those not originally specified by NISSAN could affect the proper operation of the TPMS.**

CHANGING A FLAT TIRE

If you have a flat tire, follow the instructions below:

Stopping the vehicle

1. Safely move the vehicle off the road and away from traffic.
2. Turn on the hazard warning flashers.
3. Park on a level surface and apply the parking brake. Shift the manual transmission into R (Reverse) or the Continuously Variable Transmission (CVT) into P (Park).
4. Turn off the engine.
5. Raise the hood to warn other traffic and to signal professional road assistance personnel that you need assistance.

6. Have all passengers get out of the vehicle and stand in a safe place, away from traffic and clear of the vehicle.

⚠ WARNING

- **Make sure the parking brake is securely applied and the manual transmission is shifted into R (Reverse), or the Continuously Variable Transmission (CVT) into P (Park).**
- **Never change tires when the vehicle is on a slope, ice or slippery areas. This is hazardous.**
- **Never change tires if oncoming traffic is close to your vehicle. Wait for professional road assistance.**

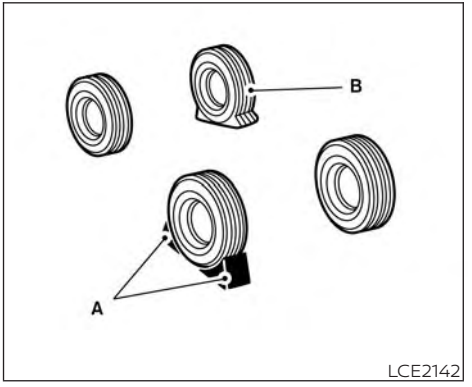

LCE2142

A. Blocks

B. Flat tire

Blocking wheels

Place suitable blocks at both the front and back of the wheel diagonally opposite the flat tire to prevent the vehicle from moving when it is jacked up.

⚠ WARNING

Be sure to block the wheel as the vehicle may move and result in personal injury.

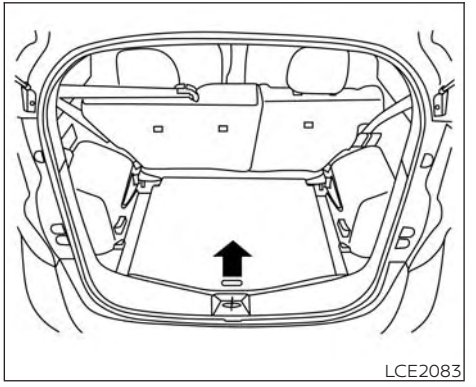
LCE2083

Getting the spare tire and tools

Open the rear hatch. Remove the Divide-N-Hide® floor (if so equipped). For additional information, refer to "Divide-N-Hide® adjustable floor" in the "Instruments and controls" section of this manual.

Lift the floorboard.

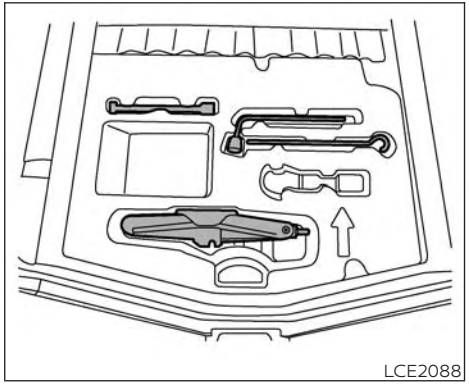

1. Remove the jacking tools from the storage location.

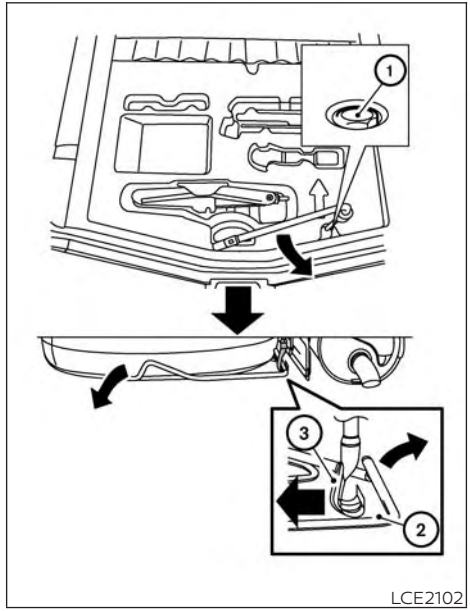

2. Loosen the bolt ① counterclockwise to lower the spare.
3. Stop turning the bolt when the spare is lowered to the point where the tire basket ② can be removed from the hook ③.
4. Remove the wheel basket by pushing the basket upward.
5. Lower the tire basket to the ground and take out the spare.
6. Once the spare tire has been removed from the basket, push the basket upward to hang the tire basket on the hook.
7. Tighten the bolt ① clockwise to raise the tire basket.

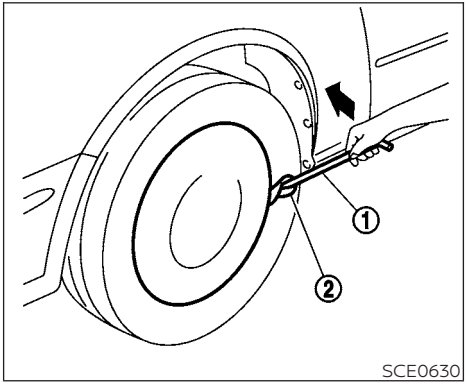

Removing wheel cover (if so equipped)

⚠ CAUTION

Do not use your hands to pry off wheel caps or wheel covers. Doing so could result in personal injury.

To remove the wheel cover, use the jacking rod ① as illustrated.

Apply cloth ② between the wheel and jack rod to prevent damaging the wheel and wheel cover.

Use caution not to scratch the wheel cover or wheel surface.

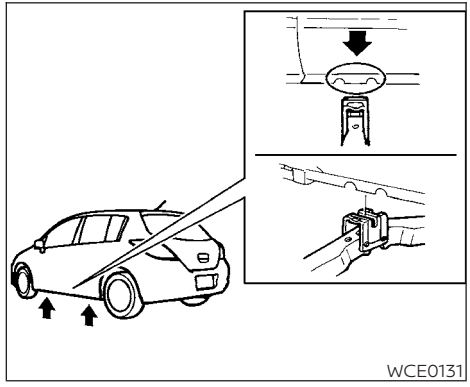

Jacking up vehicle and removing the damaged tire

⚠ WARNING

- **Never get under the vehicle while it is supported only by the jack. If it is necessary to work under the vehicle, support it with safety stands.**
- **Use only the jack provided with your vehicle to lift the vehicle. Do not use the jack provided with your vehicle on other vehicles. The jack is designed for lifting only your vehicle during a tire change.**

- **Use the correct jack-up points. Never use any other part of the vehicle for jack support.**
- **Never jack up the vehicle more than necessary.**
- **Never use blocks on or under the jack.**
- **Do not start or run the engine while vehicle is on the jack. It may cause the vehicle to move. This is especially true for vehicles with limited slip differentials.**
- **Do not allow passengers to stay in the vehicle while it is on the jack.**
- **Never run the engine with a wheel(s) off the ground. It may cause the vehicle to move.**

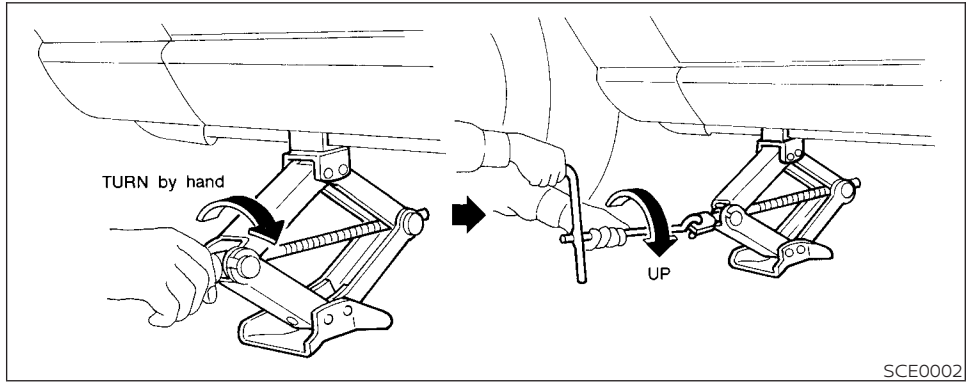

Always refer to the illustrations for the correct placement and jack-up points for your specific vehicle model and jack type.

Carefully read the caution label attached to the jack body and the following instructions.

1. Loosen each wheel nut 1 or 2 turns by turning counterclockwise with the wheel nut wrench. **Do not remove the wheel nuts until the tire is off the ground.**
2. Place the jack directly under the jack-up point as illustrated so the top of the jack contacts the vehicle at the jack-up point. Align the jack head between the 2 notches in the front or the rear as shown. Also fit the groove of the jack head between the notches as shown.

   The jack should be used on firm and level ground.
3. To lift the vehicle, securely hold the jack lever and rod with both hands. Carefully raise the vehicle until the tire clears the ground. Remove the wheel nuts, and then remove the tire.

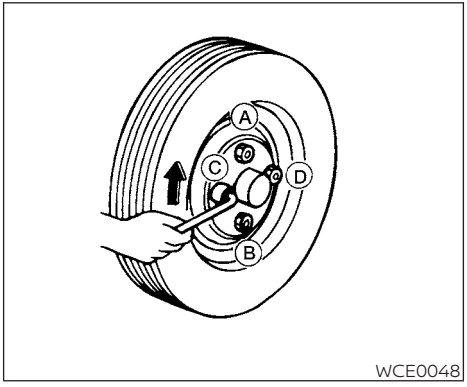

Installing the spare tire

The spare tire is designed for emergency use. For additional information, refer to "Wheels and tires" in the "Do-it-yourself" section of this manual.

1. Clean any mud or dirt from the surface between the wheel and hub.
2. Carefully put the spare tire on and tighten the wheel nuts finger tight.
3. With the wheel nut wrench, tighten wheel nuts alternately and evenly in the sequence illustrated (Ⓐ, Ⓑ, Ⓒ, Ⓓ) until they are tight.
4. Lower the vehicle slowly until the tire touches the ground. Then, with the wheel nut wrench, tighten the wheel nuts securely in the sequence illustrated (Ⓐ, Ⓑ, Ⓒ, Ⓓ). Lower the vehicle completely.

⚠ WARNING

- **Incorrect wheel nuts or improperly tightened wheel nuts can cause the wheel to become loose or come off. This could cause an accident.**
- **Do not use oil or grease on the wheel studs or nuts. This could cause the nuts to become loose.**
- **Retighten the wheel nuts when the vehicle has been driven for 600 miles (1,000 km) (also in cases of a flat tire, etc.).**

As soon as possible, tighten the wheel nuts to the specified torque with a torque wrench.

Wheel nut tightening torque:

83 ft-lb (113 N·m)

The wheel nuts must be kept tightened to specification at all times. It is recommended that wheel nuts be tightened to specifications at each lubrication interval.

Adjust the tire pressure to the COLD pressure.

COLD pressure: After vehicle has been parked for 3 hours or more or driven less than 1 mile (1.6 km).

COLD tire pressures are shown on the Tire and Loading Information label affixed to the driver side center pillar.

5. Securely store the flat tire and jacking equipment in the vehicle. For additional information, refer to "Stowing the damaged tire" in this section of the manual.

⚠ WARNING

- **Always make sure that the spare tire and jacking equipment are properly secured after use. Such items can become dangerous projectiles in an accident or sudden stop.**
- **The spare tire is designed for emergency use. For additional information, refer to "Wheels and tires" in the "Do-it-yourself" section of this manual**

Reinstalling the temporary spare tire to its original position

After the flat tire is repaired, return the temporary spare to its original position in the tire basket under the rear of the vehicle.

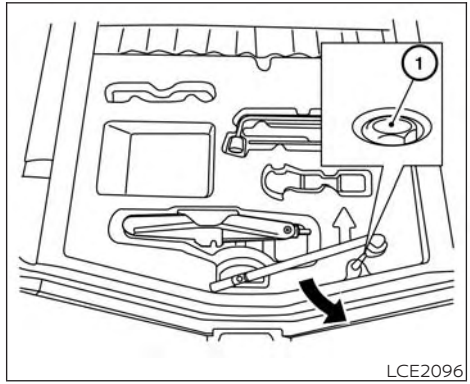

LCE2096

1. Open the hatch.
2. Remove the luggage floor.
3. Loosen bolt ① counterclockwise approximately 20 turns using the wheel nut wrench and wrench extension to lower the tire basket.
4. Stop turning the bolt when the tire basket is lowered to a place where it can be removed from the hook. **Do not loosen the bolt excessively, otherwise the basket may fall suddenly.**

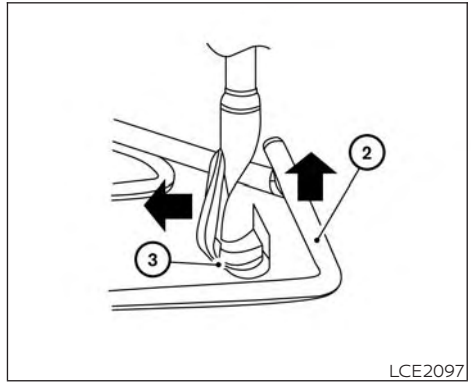

LCE2097

5. Hold the tire basket and remove it from the hook by pushing the basket ② upward and moving the hook ③ to release the basket.

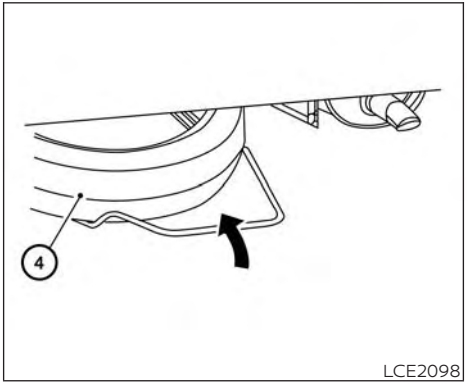

LCE2098

6. Lower the tire basket slowly to the ground and then put in the temporary spare tire ④.

NOTE:

Place the tire with the stickers facing upwards in the tire basket.

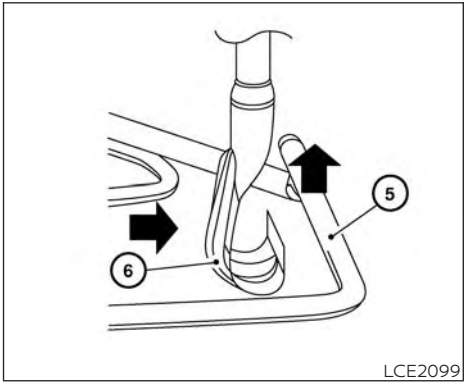

LCE2099

7. Reinstall the tire basket by pushing upward on the basket ⑤ and inserting the hook ⑥.

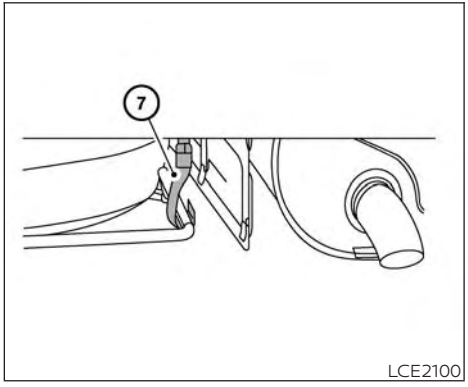

LCE2100

Be sure that the hook is located as shown in the image ⑦. The hook must engage from the inside of the basket.

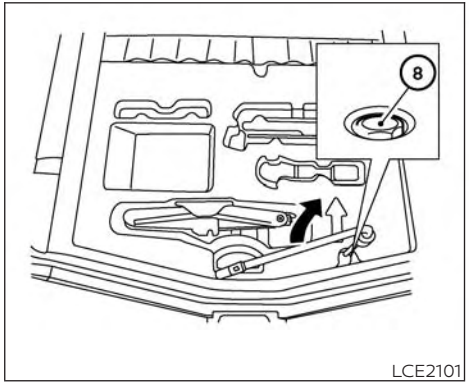

8. Tighten the bolt ⑧ clockwise until the bolt is tight using the wheel nut wrench and wrench extension to move the tire basket up to the holding position.

⚠ WARNING

- **Always make sure that the spare tire, tire basket and jacking equipment are properly secured after use. Such items can become dangerous projectiles in an accident or sudden stop.**
- **The spare tire is designed for emergency use. For additional information, refer to "Wheels and tires" in the "Do-it-yourself" section of this manual.**
- **When reinstalling the spare tire basket under the vehicle after use, be sure that the hook engages the basket from the inside. If the spare tire basket hook is not engaged properly, there is an increased risk of the spare tire separating from the vehicle in a crash and causing injury.**

Stowing the damaged tire

Return the spare tire basket back to its original position in the reverse order of removal. For additional information, refer to "Getting the spare tire and tools" in this section.

Spare tire basket bolt tightening torque:

56 ft–lb (75 N•m)

Securely store the jack and tools in the storage area.

Securely store the damaged tire inside the vehicle.

NOTE:

The spare tire basket cannot be used to store the conventional tire.

⚠ WARNING

- **Always make sure that the spare tire and jacking equipment are properly secured after each use. Such items can become dangerous projectiles in an accident or sudden stop.**
- **Make sure that the spare tire basket is properly secured in its original position after removing the spare tire.**
- **The spare tire and small size spare tire are designed for emergency use. For additional information, refer to "Wheels and tires" in the "Do-it-yourself" section of this manual.**

JUMP STARTING

To start your engine with a booster battery, the instructions and precautions below must be followed.

⚠ WARNING

- **If done incorrectly, jump starting can lead to a battery explosion, resulting in severe injury or death. It could also damage your vehicle.**
- **Explosive hydrogen gas is always present in the vicinity of the battery. Keep all sparks and flames away from the battery.**
- **Do not allow battery fluid to come into contact with eyes, skin, clothing or painted surfaces. Battery fluid is a corrosive sulfuric acid solution which can cause severe burns. If the fluid should come into contact with anything, immediately flush the contacted area with water.**
- **Keep battery out of the reach of children.**
- **The booster battery must be rated at 12 volts. Use of an improperly rated battery can damage your vehicle.**
- **Whenever working on or near a battery, always wear suitable eye protectors (for example, goggles or industrial safety spectacles) and remove rings, metal bands, or any other jewelry. Do not lean over the battery when jump starting.**
- **Do not attempt to jump start a frozen battery. It could explode and cause serious injury.**
- **Your vehicle has an automatic engine cooling fan. It could come on at any time. Keep hands and other objects away from it.**

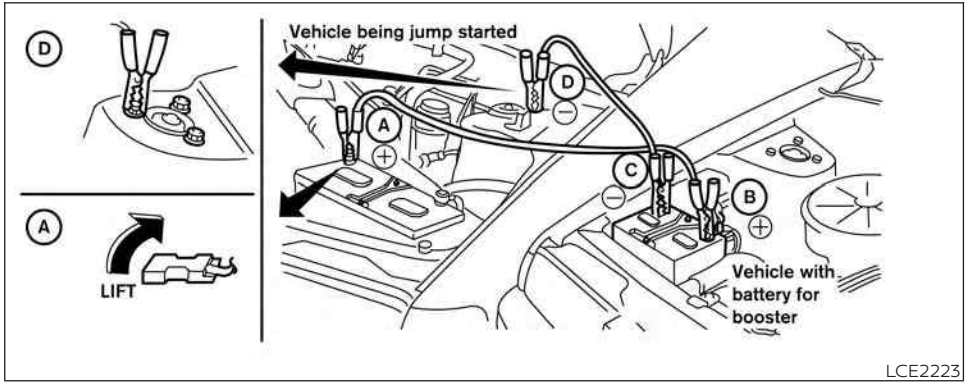

⚠ WARNING

Always follow the instructions below. Failure to do so could result in damage to the charging system and cause personal injury.

1. If the booster battery is in another vehicle, position the 2 vehicles to bring their batteries near each other.

   Do not allow the 2 vehicles to touch.

2. Apply the parking brake. Move the shift lever to N (Neutral) (manual transmission) or to P (Park) (Continuously Variable Transmission (CVT)). Switch off all unnecessary electrical systems (lights, heater, air conditioner, etc.).
3. Connect jumper cables in the sequence illustrated (Ⓐ, Ⓑ, Ⓒ, Ⓓ).

⚠ CAUTION

- **Always connect positive (+) to positive (+) and negative (−) to body ground (for example, strut mounting bolt, engine lift bracket, etc.) — not to the battery.**
- **Make sure the jumper cables do not touch moving parts in the engine compartment and that the cable clamps do not contact any other metal.**

4. Start the engine of the booster vehicle and let it run for a few minutes.
5. Keep the engine speed of the booster vehicle at about 2,000 rpm, and start the engine of the vehicle being jump started.

⚠ CAUTION

Do not keep the starter motor engaged for more than 15 seconds. If the engine does not start, place the ignition switch in the OFF position and wait 10 seconds before trying again, otherwise the starter could be damaged.

6. After starting the engine, carefully disconnect the negative cable and then the positive cable.

PUSH STARTING

⚠ CAUTION

- **Do not push start this vehicle. The 3-way catalyst may be damaged.**
- **Continuously Variable Transmission (CVT) and manual transmission models cannot be push-started or tow-started. Attempting to do so may cause transmission damage.**
- **For manual transmission models, never try to start the vehicle by towing it. When the engine starts, the forward surge could cause the vehicle to collide with the tow vehicle.**

IF YOUR VEHICLE OVERHEATS

If your vehicle is overheating (indicated by a red high temperature warning light or an extremely high temperature gauge reading) or if you feel a lack of engine power, detect abnormal noise, etc. take the following steps.

⚠ WARNING

- **Do not continue to drive if your vehicle overheats. Doing so could cause engine damage or a vehicle fire.**
- **To avoid the danger of being scalded, never remove the radiator cap while the engine is still hot. When the radiator cap is removed, pressurized hot water will spurt out, possibly causing serious injury.**
- **Do not open the hood if steam is coming out.**

1. Move the vehicle safely off the road, apply the parking brake and move the shift lever to N (Neutral) (manual transmission) or to P (Park) (continuously variable transmission).

   Do not stop the engine.

2. Turn off the air conditioner. Open all the windows, move the heater or air conditioner temperature control to maximum hot and fan control to high speed.
3. Get out of the vehicle. Look and listen for steam or coolant escaping from the radiator before opening the hood. (If steam or coolant is escaping, turn off the engine.) Do not open the hood further until no steam or coolant can be seen.
4. Open the engine hood.

⚠ WARNING

If steam or water is coming from the engine, stand clear to prevent getting burned.

5. Visually check drive belts for damage or looseness. Also check if the cooling fan is running. The radiator hoses and radiator should not leak water. If coolant is leaking, the water pump belt is missing or loose, or the cooling fan does not run, stop the engine.

⚠ WARNING

Be careful not to allow your hands, hair, jewelry or clothing to come into contact with, or get caught in, engine belts or the engine cooling fan. The engine cooling fan can start at any time.

6. After the engine cools down, check the coolant level in the engine coolant reservoir tank with the engine running. Add coolant to the engine coolant reservoir tank if necessary. Have your vehicle repaired. It is recommended that you visit a NISSAN dealer for this service.

When towing your vehicle, all State (Provincial in Canada) and local regulations for towing must be followed. Incorrect towing equipment could damage your vehicle. Towing instructions are available from a NISSAN dealer. Local service operators are generally familiar with the applicable laws and procedures for towing. To assure proper towing and to prevent accidental damage to your vehicle, NISSAN recommends having a service operator tow your vehicle. It is advisable to have the service operator carefully read the following precautions:

⚠ WARNING

- **Never ride in a vehicle that is being towed.**
- **Never get under your vehicle after it has been lifted by a tow truck.**

⚠ CAUTION

- **When towing, make sure that the transmission, axles, steering system and powertrain are in working condition. If any of these conditions apply, dollies or a flatbed tow truck must be used.**
- **Always attach safety chains before towing.**

For additional information, refer to "Flat towing" in the "Technical and Consumer Information" section of this manual.

TOWING RECOMMENDED BY NISSAN

NISSAN recommends towing your vehicle based upon the type of drivetrain. For additional information, refer to the diagrams in this section to ensure that your vehicle is properly towed.

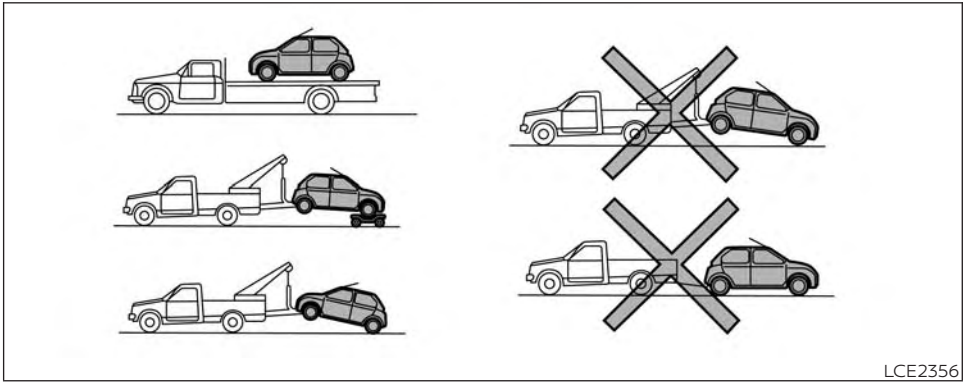

Two-Wheel Drive models with Continuously Variable Transmission (CVT)

NISSAN recommends that your vehicle be towed with the driving (front) wheels off the ground or place the vehicle on a flatbed truck as illustrated.

⚠ CAUTION

- **Never tow CVT models with the front wheels on the ground or four wheels on the ground (forward or backward), as this may cause serious and expensive damage to the transmission. If it is necessary to tow the vehicle with the rear wheels raised always use towing dollies under the front wheels.**
- **When towing CVT models with the rear wheels on the ground or on towing dollies:**
  - **Place the ignition switch in the OFF position, and secure the steering wheel in a straight-ahead position with a rope or similar device. Never secure the steering wheel by placing the ignition switch in the LOCK position. This may damage the steering lock mechanism (for models with a steering lock mechanism).**

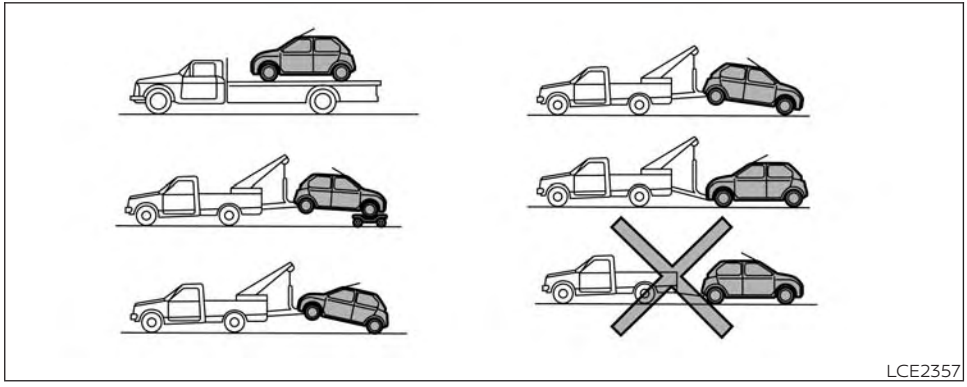

Two-Wheel Drive models with manual transmission

NISSAN recommends that towing dollies be used when towing your vehicle or place the vehicle on the flatbed truck as illustrated.

If you must use a pull behind tow truck put the manual transmission in N (Neutral).

Your vehicle speed should never exceed 60 mph (97 km/h) when towing your vehicle. After towing 500 miles, start and idle the engine with the transmission in N (Neutral) for two minutes. Failure to idle the engine after every 500 miles of towing may cause damage to the transmission's internal parts.

⚠ CAUTION

Failure to follow these guidelines can result in severe transmission damage.

- **If you have to tow manual transmission models with the rear wheels on the ground (if you do not use towing dollies) or four wheels on the ground:**
  - **Always release the parking brake.**
  - **Move the transmission shift lever to the N (Neutral) position**
  - **Observe the following restricted towing speeds and distances for manual transmission models only:**

    Speed: Below 60 mph (97 km/h)

    Distance: Less than 500 miles (805 km)

When towing long distances or speeds in excess of 60 mph (97 km/h), remove the propeller shaft before towing to prevent damage to the transmission. For additional information, it is recommended that you visit a NISSAN dealer.

VEHICLE RECOVERY (freeing a stuck vehicle)

⚠ WARNING

To avoid vehicle damage, serious personal injury or death when recovering a stuck vehicle:

- **Contact a professional towing service to recover the vehicle if you have any questions regarding the recovery procedure.**

- **Tow chains or cables must be attached only to main structural members of the vehicle.**
- **Do not use the vehicle tie-downs to tow or free a stuck vehicle.**
- **Only use devices specifically designed for vehicle recovery and follow the manufacturer's instructions.**
- **Always pull the recovery device straight out from the front of the vehicle. Never pull at an angle.**
- **Route recovery devices so they do not touch any part of the vehicle except the attachment point.**

If your vehicle is stuck in sand, snow, mud, etc., use a tow strap or other device designed specifically for vehicle recovery. Always follow the manufacturer's instructions for the recovery device.

Rocking a stuck vehicle

⚠ WARNING

- **Stand clear of a stuck vehicle.**
- **Do not spin your tires at high speed. This could cause them to explode and result in serious injury. Parts of your vehicle could also overheat and be damaged.**

If your vehicle is stuck in sand, snow, mud, etc., use the following procedure:

1. Turn off the Vehicle Dynamic Control (VDC) System.
2. Make sure the area in front and behind the vehicle is clear of obstructions.
3. Turn the steering wheel right and left to clear an area around the front tires.
4. Slowly rock the vehicle forward and backward.
   - Shift back and forth between R (Reverse) and D (Drive) (Continuously Variable Transmission models) or 1st (Low) and R (Reverse) (manual transmission models).
   - Apply the accelerator as little as possible to maintain the rocking motion.
   - Release the accelerator pedal before shifting between R (Reverse) and D (Drive) (Continuously Variable Transmission (CVT) models) or 1st (Low) and R (Reverse) (manual transmission models).
   - Do not spin the tires above 35 mph (55 km/h).
5. If the vehicle cannot be freed after a few tries, contact a professional towing service to remove the vehicle.

7 Appearance and care

Cleaning exterior 7-2
Washing 7-2
Waxing 7-2
Removing spots 7-3
Underbody 7-3
Glass 7-3
Aluminum alloy wheels (if so equipped) 7-3
Chrome parts 7-3
Tire dressings 7-3
Cleaning interior 7-4
Air fresheners 7-4
Floor mats (if so equipped) 7-5
Seat belts 7-6
Corrosion protection 7-7
Most common factors contributing to vehicle corrosion 7-7
Environmental factors influence the rate of corrosion 7-7
Protect your vehicle from corrosion 7-8

In order to maintain the appearance of your vehicle, it is important to take proper care of it.

To protect the paint surfaces, wash your vehicle as soon as you can:

- After a rainfall to prevent possible damage from acid rain.
- After driving on coastal roads.
- When contaminants such as soot, bird droppings, tree sap, metal particles or bugs get on the paint surface.
- When dust or mud builds up on the surface.

Whenever possible, store or park your vehicle inside a garage or in a covered area.

When it is necessary to park outside, park in a shady area or protect the vehicle with a body cover.

Be careful not to scratch the paint surface when putting on or removing the body cover.

WASHING

Wash dirt off with a wet sponge and plenty of water. Clean the vehicle thoroughly using a mild soap, a special vehicle soap or general purpose dishwashing liquid mixed with clean, lukewarm (never hot) water.

⚠ CAUTION

- **Do not use car washes that use acid in the detergent. Some car washes, especially brushless ones, use some acid for cleaning. The acid may react with some plastic vehicle components, causing them to crack. This could affect their appearance, and also could cause them not to function properly. Always check with your car wash to confirm that acid is not used.**
- **Do not wash the vehicle with strong household soap, strong chemical detergents, gasoline or solvents.**
- **Do not wash the vehicle in direct sunlight or while the vehicle body is hot, as the surface may become water-spotted.**
- **Avoid using tight-napped or rough cloths, such as washing mitts. Care must be taken when removing caked-on dirt or other foreign substances so the paint surface is not scratched or damaged.**

Rinse the vehicle thoroughly with plenty of clean water.

Inside edges, seams and folds on the doors, hatches and hood are particularly vulnerable to the effects of road salt. Therefore, these areas must be cleaned regularly. Take care that the drain holes in the lower edge of the door are open. Spray water under the body and in the wheel wells to loosen the dirt and wash away road salt.

A damp chamois can be used to dry the vehicle to avoid water spots.

WAXING

Regular waxing protects the paint surface and helps retain new vehicle appearance. Polishing is recommended to remove built-up wax residue and to avoid a weathered appearance before re-applying wax.

It is recommended that you visit a NISSAN dealer to assist you in choosing the proper product.

- Wax your vehicle only after a thorough washing. Follow the instructions supplied with the wax.
- Do not use a wax containing any abrasives, cutting compounds or cleaners that may damage the vehicle finish.

Machine compounding or aggressive polishing on a base coat/clear coat paint finish may dull the finish or leave swirl marks.

REMOVING SPOTS

Remove tar and oil spots, industrial dust, insects, and tree sap as quickly as possible from the surface of the paint to avoid lasting damage or staining. Special cleaning products are available at a NISSAN dealer or any automotive accessory store. It is recommended that you visit a NISSAN dealer for these products.

UNDERBODY

In areas where road salt is used in winter, it is necessary to clean the underbody regularly in order to prevent dirt and salt from building up and causing the acceleration of corrosion on the underbody and suspension. Before the winter period and again in the spring, the underseal must be checked and, if necessary, re-treated.

GLASS

Use glass cleaner to remove smoke and dust film from the glass surfaces. It is normal for glass to become coated with a film after the vehicle is parked in the hot sun. Glass cleaner and a soft cloth will easily remove this film.

⚠ CAUTION

When cleaning the inside of the windows, do not use sharp-edged tools, abrasive cleaners or chlorine-based disinfectant cleaners. They could damage the electrical conductors, radio antenna elements or rear window defroster elements.

ALUMINUM ALLOY WHEELS (if so equipped)

Wash the wheels regularly with a sponge dampened in a mild soap solution, especially during winter months in areas where road salt is used. If not removed, road salt can discolor the wheels.

⚠ CAUTION

Follow the directions below to avoid staining or discoloring the wheels:

- **Do not use a cleaner that uses strong acid or alkali contents to clean the wheels.**
- **Do not apply wheel cleaners to the wheels when they are hot. The wheel temperature should be the same as ambient temperature.**
- **Rinse the wheel to completely remove the cleaner within 15 minutes after the cleaner is applied.**

CHROME PARTS

Clean all chrome parts regularly with a non-abrasive chrome polish to maintain the finish.

TIRE DRESSINGS

NISSAN does not recommend the use of tire dressings. Tire manufacturers apply a coating to the tires to help reduce discoloration of the rubber. If a tire dressing is applied to the tires, it may react with the coating and form a compound. This compound may come off the tire while driving and stain the vehicle paint.

If you choose to use a tire dressing, take the following precautions:

- Use a water-based tire dressing. The coating on the tire dissolves more easily than with an oil-based tire dressing.
- Apply a light coat of tire dressing to help prevent it from entering the tire tread/grooves (where it would be difficult to remove).
- Wipe off excess tire dressing using a dry towel. Make sure the tire dressing is completely removed from the tire tread/grooves.
- Allow the tire dressing to dry as recommended by the tire dressing manufacturer.

Occasionally remove loose dust from the interior trim, plastic parts and seats using a vacuum cleaner or soft bristled brush. Wipe the vinyl and leather (if so equipped) surfaces with a clean, soft cloth dampened in mild soap solution, then wipe clean with a dry, soft cloth.

Regular care and cleaning is required in order to maintain the appearance of the leather (if so equipped).

Before using any fabric protector, read the manufacturer's recommendations. Some fabric protectors contain chemicals that may stain or bleach the seat material.

Use a cloth dampened only with water to clean the meter and gauge lens.

⚠ WARNING

Do not use water or acidic cleaners (hot steam cleaners) on the seat. This can damage the seat or occupant classification sensor. This can also affect the operation of the air bag system and result in serious personal injury.

⚠ CAUTION

- **Never use benzine, thinner or any similar material.**
- **Small dirt particles can be abrasive and damaging to leather surfaces and should be removed promptly. Do not use saddle soap, car waxes, polishes, oils, cleaning fluids, solvents, detergents or ammonia-based cleaners as they may damage the leather's natural finish.**
- **Never use fabric protectors unless recommended by the manufacturer.**
- **Do not use glass or plastic cleaner on meter or gauge lens covers. It may damage the lens cover.**

AIR FRESHENERS

Most air fresheners use a solvent that could affect the vehicle interior. If you use an air freshener, take the following precautions:

- Hanging-type air fresheners can cause permanent discoloration when they contact vehicle interior surfaces. Place the air freshener in a location that allows it to hang free and not contact an interior surface.

- Liquid-type air fresheners typically clip on the vents. These products can cause immediate damage and discoloration when spilled on interior surfaces.

Carefully read and follow the manufacturer's instructions before using the air fresheners.

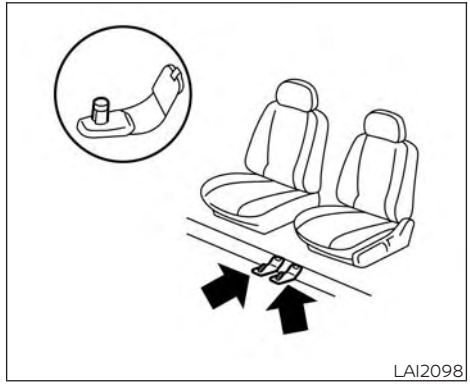

FLOOR MATS (if so equipped)

⚠ WARNING

To avoid potential pedal interference that may result in a collision, injury or death:

- **NEVER place a floor mat on top of another floor mat in the driver front position or install them upside down or backwards.**
- **Use only Genuine NISSAN floor mats, or equivalent floor mats, that are specifically designed for use in your vehicle model and model year.**
- **Properly position the mats in the floorwell using the floor mat positioning hook. For additional information, refer to "Floor mat installation" in this section.**
- **Make sure the floor mat does not interfere with pedal operation.**
- **Periodically check the floor mats to make sure they are properly installed.**
- **After cleaning the vehicle interior, check the floor mats to make sure they are properly installed.**

The use of Genuine NISSAN floor mats can extend the life of your vehicle carpet and make it easier to clean the interior. Mats should be maintained with regular cleaning and replaced if they become excessively worn.

Floor mat installation

Your vehicle is equipped with floor mat positioning hook(s). The number and shape of the floor mat positioning hooks for each seating position varies depending on the vehicle.

When installing Genuine NISSAN floor mats, follow the installation instructions provided with the mat and the following:

1. With the ignition in the OFF position, the shift lever in P (Park) position (Continuously Variable Transmission models) or the shift lever in the N (Neutral) position (manual transmission models) and with the parking break fully applied, position the floor mat in the floorwell so that the floor mat grommet holes are aligned with the hook(s).
2. Secure the grommet holes into the hook(s) and ensure that the floor mat is properly positioned.
3. Make sure the floor mat does not interfere with pedal operation. With the ignition still in the OFF position, the shift lever in the P (Park) position (Continuously Variable Transmission models) or the shift lever in the N (Neutral) position (manual transmission models) and with the parking break applied, fully apply and release all pedals. The floor mat must not interfere with pedal operation or prevent the pedal from returning to its normal position.

It is recommended that you visit a NISSAN dealer for details about installing the floor mats in your vehicle.

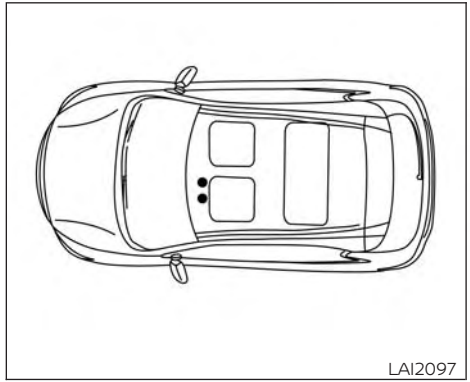

Positioning hooks

The illustration shows the location of the floor mat positioning hooks.

SEAT BELTS

The seat belts can be cleaned by wiping them with a sponge dampened in a mild soap solution. Allow the belts to dry completely in the shade before using them. For additional information, refer to "Seat belt maintenance" in the "Safety—Seats, seat belts and supplemental restraint system" section of this manual.

⚠ WARNING

Do not allow wet seat belts to roll up in the retractor. NEVER use bleach, dye or chemical solvents to clean the seat belts, since these materials may severely weaken the seat belt webbing.

MOST COMMON FACTORS CONTRIBUTING TO VEHICLE CORROSION

Most vehicle corrosion is caused by:

- The accumulation of moisture-retaining dirt and debris in body panel sections, cavities, and other areas.
- Damage to paint and other protective coatings caused by gravel and stone chips or minor traffic collisions.

ENVIRONMENTAL FACTORS INFLUENCE THE RATE OF CORROSION

Moisture

Accumulation of sand, dirt and water on the vehicle body underside can accelerate corrosion. Wet floor coverings will not dry completely inside the vehicle and should be removed for drying to avoid floor panel corrosion.

Relative humidity

Corrosion will be accelerated in areas of high relative humidity, especially those areas where the temperatures stay above freezing and where atmospheric pollution exists and road salt is used.

Temperature

High temperatures accelerate the rate of corrosion to those parts which are not well ventilated.

Air pollution

Industrial pollution, the presence of salt in the air in coastal areas, or heavy road salt use accelerates the corrosion process. Road salt also accelerates the disintegration of paint surfaces.

PROTECT YOUR VEHICLE FROM CORROSION

- Wash and wax your vehicle often to keep the vehicle clean.
- Always check for minor damage to the paint and repair it as soon as possible.
- Keep drain holes at the bottom of the doors open to avoid water accumulation.
- Check the underbody for accumulation of sand, dirt or salt. If present, wash with water as soon as possible.

⚠ CAUTION

- **NEVER remove dirt, sand or other debris from the passenger compartment by washing it out with a hose. Remove dirt with a vacuum cleaner or broom.**
- **Never allow water or other liquids to come in contact with electronic components inside the vehicle as this may damage them.**

Chemicals used for road surface de-icing are extremely corrosive. They accelerate corrosion and deterioration of underbody components such as the exhaust system, fuel and brake lines, brake cables, floor pan and fenders.

In winter, the underbody must be cleaned periodically.

For additional protection against rust and corrosion, which may be required in some areas, it is recommended that you visit a NISSAN dealer.

8 Do-it-yourself

Maintenance precautions 8-2
Engine compartment check locations 8-3
Engine cooling system 8-4
Checking engine coolant level 8-5
Changing engine coolant 8-5
Engine oil 8-6
Checking engine oil level 8-6
Changing engine oil 8-7
Changing engine oil filter 8-8
Continuously Variable Transmission (CVT) fluid (if so equipped) 8-9
Brake and clutch (if so equipped) fluid 8-9
Brake fluid 8-10
Clutch (if so equipped) fluid 8-10
Windshield-washer fluid 8-10
Windshield-washer fluid reservoir 8-10
Battery 8-12
Jump starting 8-13
Variable voltage control system 8-14
Drive belt 8-14
Spark plugs 8-15
Replacing spark plugs 8-15
Air cleaner 8-16
Windshield wiper blades 8-16
Cleaning 8-16
Replacing 8-17
Brakes 8-18
Fuses 8-19
Engine compartment 8-19
Passenger compartment 8-20
Battery replacement 8-22
Key fob (if so equipped) 8-22
NISSAN Intelligent Key® (if so equipped) 8-24
Lights 8-25
Headlights 8-25
Fog lights (if so equipped) 8-26
Exterior and interior lights 8-27
Wheels and tires 8-30
Tire pressure 8-30
Tire labeling 8-33
Types of tires 8-36
Tire chains 8-37
Changing wheels and tires 8-38

MAINTENANCE PRECAUTIONS

When performing any inspection or maintenance work on your vehicle, always take care to prevent serious accidental injury to yourself or damage to the vehicle. The following are general precautions which should be closely observed.

⚠ WARNING

- **Park the vehicle on a level surface, apply the parking brake securely and block the wheels to prevent the vehicle from moving. For manual transmission models, move the shift lever to N (Neutral). For CVT models, move the shift lever to P (Park).**
- **Be sure the ignition switch is in the OFF or LOCK position when performing any parts replacement or repairs.**
- **If you must work with the engine running, keep your hands, clothing, hair and tools away from moving fans, belts and any other moving parts.**
- **It is advisable to secure or remove any loose clothing and remove any jewelry, such as rings, watches, etc. before working on your vehicle.**
- **Always wear eye protection whenever you work on your vehicle.**
- **If you must run the engine in an enclosed space such as a garage, be sure there is proper ventilation for exhaust gases to escape.**
- **Never get under the vehicle while it is supported only by a jack. If it is necessary to work under the vehicle, support it with safety stands.**
- **Keep smoking materials, flame and sparks away from the fuel tank and battery.**
- **Because the fuel lines on gasoline engine models are under high pressure even when the engine is off, it is recommended that you visit a NISSAN dealer for service of the fuel filter or fuel lines.**
- **Your vehicle is equipped with an automatic engine cooling fan. It may come on at any time without warning, even if the ignition key is in the OFF position and the engine is not running. To avoid injury, always disconnect the negative battery cable before working near the fan.**

⚠ CAUTION

- **Do not work under the hood while the engine is hot. Turn the engine off and wait until it cools down.**
- **Avoid contact with used engine oil and coolant. Improperly disposed engine oil, engine coolant and/or other vehicle fluids can damage the environment. Always conform to local regulations for disposal of vehicle fluid.**
- **Never leave the engine or the transmission related component harness connector disconnected while the ignition switch is in the ON position.**
- **Never connect or disconnect the battery or any transistorized component while the ignition switch is in the ON position.**

This "Do-it-yourself" section gives instructions regarding only those items which are relatively easy for an owner to perform.

A Genuine NISSAN service manual is also available. For additional information, refer to "Owner's Manual/Service Manual order information" in the "Technical and consumer information" section of this manual.

You should be aware that incomplete or improper servicing may result in operating difficulties or excessive emissions, and could affect warranty coverage. **If in doubt about any servicing, it is recommended that you have it done by a NISSAN dealer.**

ENGINE COMPARTMENT CHECK LOCATIONS

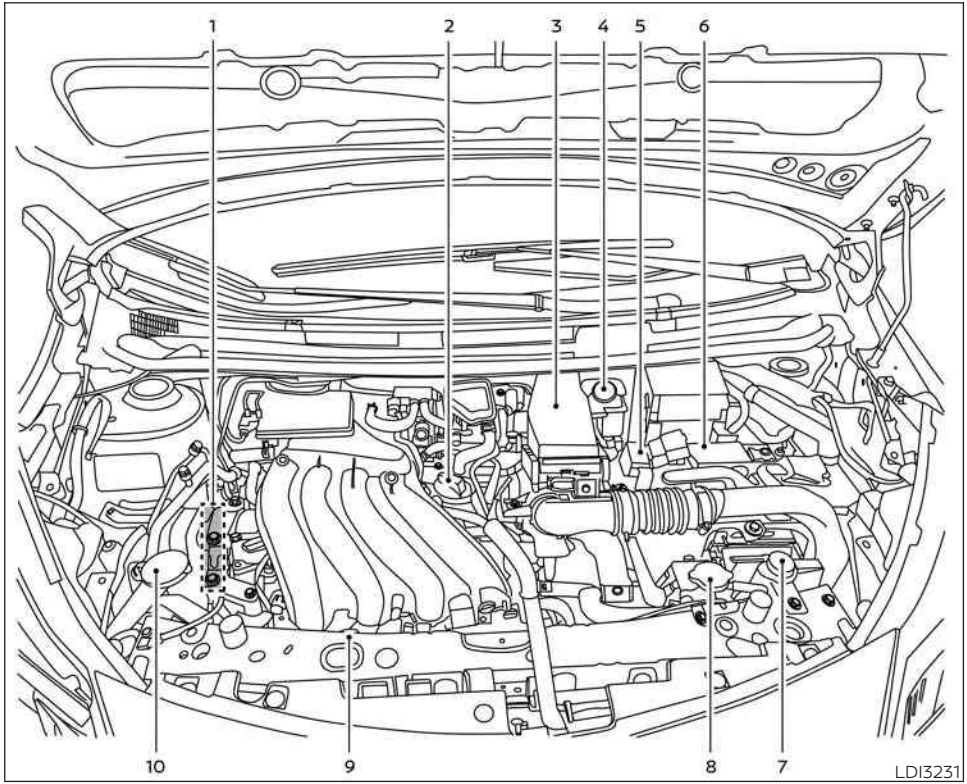

HR16DE engine

1. Drive belt location
2. Engine oil filler cap
3. Air cleaner
4. Brake and clutch (if so equipped) fluid reservoir
5. Fusible link
6. Battery
7. Engine coolant reservoir
8. Radiator cap
9. Engine oil dipstick
10. Windshield-washer fluid reservoir

ENGINE COOLING SYSTEM

The engine cooling system is filled at the factory with a pre-diluted mixture of 50% Genuine NISSAN Long Life Antifreeze/Coolant (blue) and 50% water to provide year-round antifreeze and coolant protection. The antifreeze solution contains rust and corrosion inhibitors. Additional engine cooling system additives are not necessary.

⚠ WARNING

- **Never remove the radiator or coolant reservoir cap when the engine is hot. Wait until the engine and radiator cool down. Serious burns could be caused by high pressure fluid escaping from the radiator. For additional information on precautions, refer to "If your vehicle overheats" in the "In case of emergency" section of this manual.**
- **The radiator is equipped with a pressure type radiator cap. To prevent engine damage, use only a Genuine NISSAN radiator cap.**

⚠ CAUTION

- **Never use any cooling system additives such as radiator sealer. Additives may clog the cooling system and cause damage to the engine, transmission and/or cooling system.**
- **When adding or replacing coolant, be sure to use only Genuine NISSAN Long Life Antifreeze/Coolant (blue) or equivalent. Genuine NISSAN Long Life Antifreeze/Coolant (blue) is pre-diluted to provide antifreeze protection to -34° F (-37° C). If additional freeze protection is needed due to weather where you operate your vehicle, add Genuine NISSAN Long Life Antifreeze/Coolant (blue) concentrate following the directions on the container. If an equivalent coolant other than Genuine NISSAN Long Life Antifreeze/Coolant (blue) is used, follow the coolant manufacturer's instructions to maintain minimum antifreeze protection to -34° F (-37° C). The use of other types of coolant solutions other than Genuine NISSAN Long Life Antifreeze/Coolant (blue) or equivalent may damage the engine cooling system.**
- **The life expectancy of the factory-fill coolant is 105,000 miles (168,000 km) or 7 years. Mixing any other type of coolant other than Genuine NISSAN Long Life Antifreeze/Coolant (blue), including Genuine NISSAN Long Life Antifreeze/Coolant (green), or the use of non-distilled water will reduce the life expectancy of the factory-fill coolant. For additional information, refer to the "Maintenance and schedules" section of this manual.**

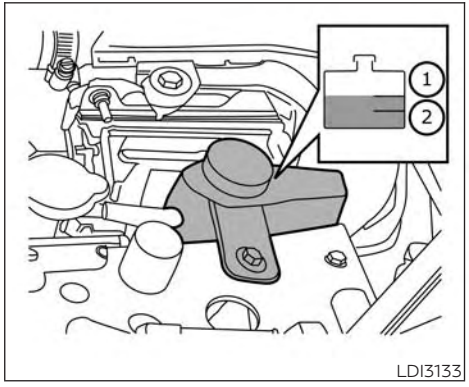

CHECKING ENGINE COOLANT LEVEL

Check the coolant level **in the reservoir when the engine is cold.** If the coolant level is below the MIN level ②, add coolant to the MAX level ①. If the reservoir is empty, check the coolant level in the radiator **when the engine is cold.** If there is insufficient coolant in the radiator, fill the radiator with coolant up to the filler opening and also add it to the reservoir up to the MAX level ①.

This vehicle contains Genuine NISSAN Long Life Antifreeze/Coolant (blue). The life expectancy of the factory-fill coolant is 105,000 miles (168,000 km) or 7 years. Mixing any other type of coolant or the use of non-distilled water will reduce the life expectancy of the factory-fill coolant. For additional information, refer to the "Maintenance and schedules" section of this manual.

If the cooling system frequently requires coolant, have it checked. It is recommended that you visit a NISSAN dealer for this service.

For additional information on the location of the engine coolant reservoir, refer to "Engine compartment check locations" in this section.

CHANGING ENGINE COOLANT

A NISSAN dealer can change the engine coolant. The service procedure can be found in the NISSAN Service Manual.

Improper servicing can result in reduced heater performance and engine overheating.

⚠ WARNING

- **To avoid the danger of being scalded, never change the coolant when the engine is hot.**
- **Never remove the radiator cap when the engine is hot. Serious burns could be caused by high pressure fluid escaping from the radiator.**
- **Avoid direct skin contact with used coolant. If skin contact is made, wash thoroughly with soap or hand cleaner as soon as possible.**
- **Keep coolant out of the reach of children and pets.**

Engine coolant must be disposed of properly. Check your local regulations.

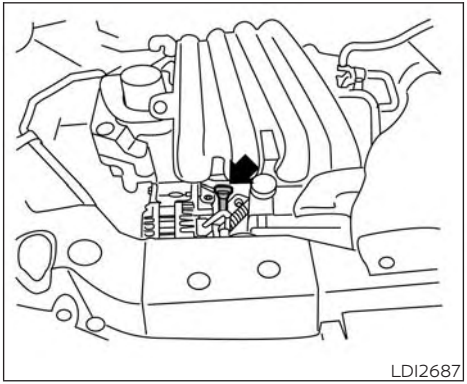
LDI2687

CHECKING ENGINE OIL LEVEL

1. Park the vehicle on a level surface and apply the parking brake.
2. Start the engine and let it idle until it reaches operating temperature.
3. Turn off the engine. **Wait more than 10 minutes for the oil to drain back into the oil pan.**
4. Remove the dipstick and wipe it clean. Reinsert it all the way.

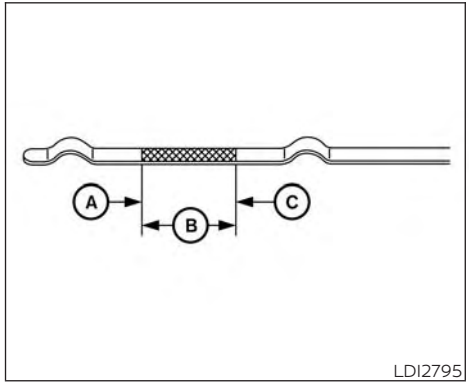

LDI2795

5. Remove the dipstick again and check the oil level. It should be between the H (High) and L (Low) marks Ⓑ. This is the normal operating oil level range. If the oil level is below the L (Low) mark Ⓐ, remove the oil filler cap and pour recommended oil through the opening. **Do not overfill Ⓒ.**
6. Recheck oil level with the dipstick.

It is normal to add some engine oil between oil maintenance intervals depending on the severity of operating conditions or depending on the property of the engine oil used. More engine oil is consumed by frequent acceleration/deceleration especially when the engine rpm is high. Consumption is likely to be higher when the engine is new. If the rate of oil consumption, after driving for 3,000 miles (5,000 km), is more than 0.5 liter per 600 miles (1,000 km), it is recommended that you visit a NISSAN dealer.

⚠ CAUTION

Oil level should be checked regularly. Operating the engine with an insufficient amount of oil can damage the engine, and such damage is not covered by warranty.

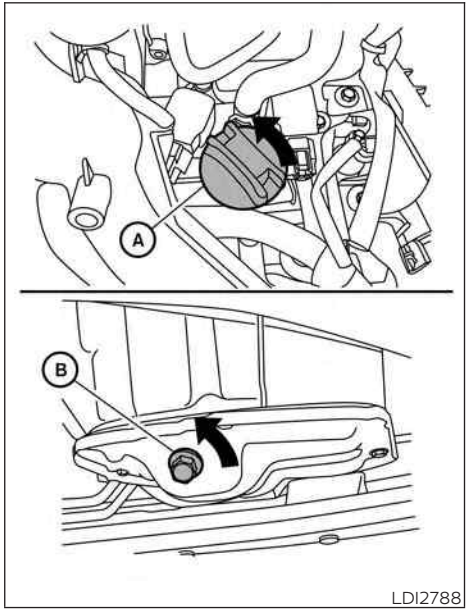

CHANGING ENGINE OIL

1. Park the vehicle on a level surface and apply the parking brake.
2. Start the engine and let it idle until it reaches operating temperature, then turn it off.
3. Remove the oil filler cap Ⓐ by turning it counterclockwise.
4. Place a large drain pan under the drain plug Ⓑ.
5. Remove the drain plug Ⓑ with a wrench by turning it counterclockwise and completely drain the oil.

   If the oil filter is to be changed, remove and replace it at this time. For additional information, refer to "Changing engine oil filter" in this section.

⚠ WARNING

- **Prolonged and repeated contact with used engine oil may cause skin cancer.**
- **Try to avoid direct skin contact with used oil. If skin contact is made, wash thoroughly with soap or hand cleaner as soon as possible.**
- **Keep used engine oil out of reach of children.**

⚠ CAUTION

- **Be careful not to burn yourself. The engine oil may be hot.**
- **Waste oil must be disposed of properly.**
- **Check your local regulations.**

6. Clean and reinstall the drain plug Ⓑ and a new washer. Securely tighten the drain plug Ⓑ with a wrench. Do not use excessive force.

   Drain plug tightening torque:
   25 ft-lb (34 N·m)

7. Refill engine with recommended oil through the oil filler opening, then install the oil filler cap Ⓐ securely.

   For additional information on drain and refill capacity, refer to "Recommended fluids/lubricants and capacities" in the "Technical and consumer information" section of this manual.

   The drain and refill capacity depends on the oil temperature and drain time. Use these specifications for reference only. Always use the dipstick to determine when the proper amount of oil is in the engine.

8. Start the engine. Check for leakage around the drain plug (B) and oil filter. Correct as required.
9. Turn the engine off and wait more than 10 minutes. Check the oil level with the dipstick. Add engine oil if necessary.

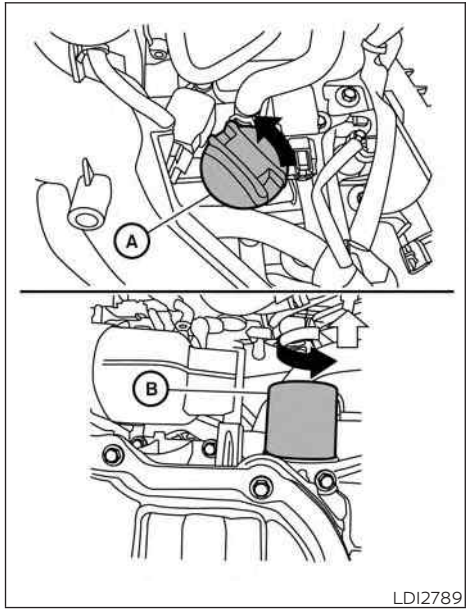

CHANGING ENGINE OIL FILTER

1. Park the vehicle on a level surface and apply the parking brake.
2. Turn the engine off.
3. Place a large drain pan under the oil filter (B).
4. Loosen the oil filter with an oil filter wrench by turning it counterclockwise. Then remove the oil filter by turning it by hand.

⚠ CAUTION

Be careful not to burn yourself. The engine oil may be hot.

5. Wipe the engine oil filter sealing surface with a clean rag.

⚠ CAUTION

Be sure to remove any old gasket material remaining on the sealing surface of the engine. Failure to do so could lead to engine damage.

6. Coat the gasket on the new filter with clean engine oil .
7. Screw on the oil filter until a slight resistance is felt, then tighten an additional 2/3 turn.

   Oil filter tightening torque:
   13 ft-lb (18 N·m)

8. Start the engine and check for leakage around the oil filter. Correct as required.

9. Turn the engine off and wait more than 10 minutes. Check the oil level. Add engine oil by removing the oil filler cap Ⓐ if necessary.

CONTINUOUSLY VARIABLE TRANSMISSION (CVT) FLUID (if so equipped)

⚠ CAUTION

- **NISSAN recommends using Genuine NISSAN CVT Fluid NS-3 (or equivalent) ONLY in NISSAN CVTs. Do not mix with other fluids.**
- **Do not use Automatic Transmission Fluid (ATF) or manual transmission fluid in a NISSAN CVT, as it may damage the CVT. Damage caused by the use of fluids other than as recommended is not covered under NISSAN's New Vehicle Limited Warranty.**
- **Using fluids that are not equivalent to Genuine NISSAN CVT Fluid NS-3 may also damage the CVT. Damage caused by the use of fluids other than as recommended is not covered under NISSAN's New Vehicle Limited Warranty.**

When checking or replacement of CVT fluid is required, it is recommended that you visit a NISSAN dealer for servicing.

BRAKE AND CLUTCH (if so equipped) FLUID

For additional information on brake fluid specification, refer to "Recommended fluids/lubricants and capacities" in the "Technical and consumer information" section of this manual.

⚠ WARNING

- **Use only new fluid from a sealed container. Old, inferior or contaminated fluid may damage the brake and clutch (if so equipped) systems. The use of improper fluids can damage the brake and clutch system and affect the vehicle's stopping ability.**
- **Clean the filler cap before removing.**
- **Brake and clutch fluid is poisonous and should be stored carefully in marked containers out of reach of children.**

⚠ CAUTION

Do not spill the fluid on any painted surfaces. This will damage the paint. If fluid is spilled, immediately wash the surface with water.

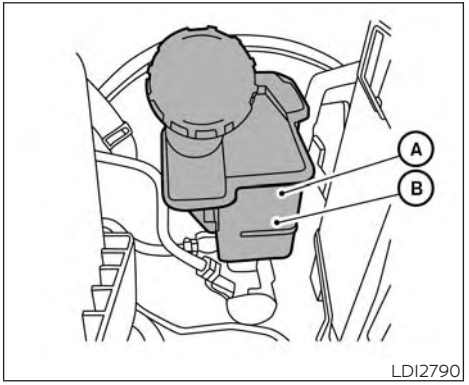

BRAKE FLUID

Check the brake fluid level in the reservoir. If the fluid level is below the MIN line Ⓑ, or the brake warning light comes on, add Genuine NISSAN Brake Fluid or equivalent **DOT 3** fluid up to the MAX line Ⓐ. If fluid must be added frequently, the system should be checked. It is recommended that you visit a NISSAN dealer for this service.

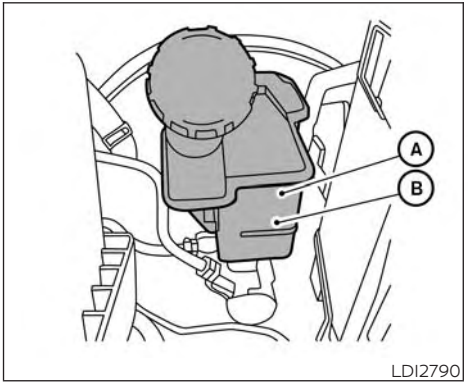

CLUTCH (if so equipped) FLUID

Check the fluid level in the reservoir. The brake fluid reservoir is shared with the clutch hydraulic system for manual transmissions. If the level is below the MIN line Ⓑ, or the brake warning light comes on, add Genuine NISSAN Brake Fluid or equivalent **DOT 3** fluid up to the MAX line Ⓐ. If fluid must be added frequently, the system should be checked. It is recommended that you visit a NISSAN dealer for this service.

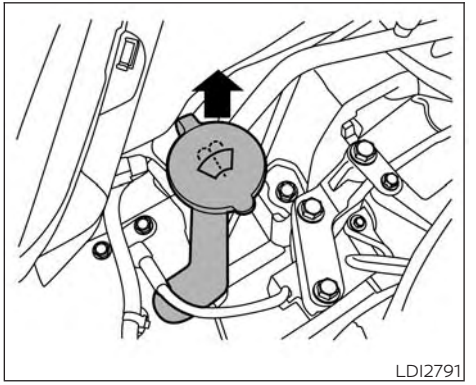

WINDSHIELD-WASHER FLUID RESERVOIR

Fill the windshield-washer fluid reservoir periodically. Add windshield-washer fluid when the low windshield-washer fluid warning light (if so equipped) comes on.

To fill the windshield-washer fluid reservoir, lift the cap off the reservoir and pour the windshield-washer fluid into the reservoir opening.

Add a washer solvent to the washer for better cleaning. In the winter season, add a windshield-washer antifreeze. Follow the manufacturer's instructions for the mixture ratio.

Refill the reservoir more frequently when driving conditions require an increased amount of windshield-washer fluid.

Recommended fluid is Genuine NISSAN Windshield-Washer Concentrate Cleaner & Antifreeze or equivalent.

⚠ CAUTION

- **Do not substitute engine antifreeze coolant for windshield-washer solution. This may result in damage to the paint.**
- **Do not fill the windshield-washer reservoir with washer fluid concentrates at full strength. Some methyl alcohol based washer fluid concentrates may permanently stain the grille if spilled while filling the windshield-washer reservoir.**
- **Pre-mix washer fluid concentrates with water to the manufacturer's recommended levels before pouring the fluid into the windshield-washer reservoir. Do not use the windshield-washer reservoir to mix the washer fluid concentrate and water.**

Caution symbols for battery			⚠ WARNING
①		No smoking, No exposed flames, No Sparks	Do not expose the battery to electrical sparks, flames or smoking. Hydrogen gas generated by the battery is explosive. Explosive gases can cause blindness or injury.
②		Shield eyes	Handle the battery cautiously. Always wear eye protection glasses to protect against explosion or battery acid.
③		Keep away from children	Never allow children to handle the battery. Keep the battery out of the reach of children.
④		Battery acid	Do not allow battery fluid to contact your skin, eyes, fabrics, or painted surfaces. Sulfuric acid can cause blindness or severe burns. After handling the battery or battery cap, do not touch or rub your eyes. Thoroughly wash your hands. If the acid contacts your eyes, skin or clothing, immediately flush with water for at least 15 minutes and seek medical attention. Battery fluid is acid. If the battery fluid gets into your eyes or onto your skin, it could cause loss of your eyesight or burns.
⑤		Note operating instructions	Before handling the battery, read this instruction carefully to ensure correct and safe handling.
⑥		Explosive gas	Hydrogen gas generated by battery fluid is explosive. Explosive gases can cause blindness or injury.

- Keep the battery surface clean and dry. Clean the battery with a solution of baking soda and water.
- Make certain the terminal connections are clean and securely tightened.
- If the vehicle is not to be used for 30 days or longer, disconnect the negative (-) battery terminal cable to prevent discharge.

NOTE:

Care should be taken to avoid situations that can lead to potential battery discharge and potential no-start conditions such as:

1. **Installation or extended use of electronic accessories that consume battery power when the engine is not running (Phone chargers, GPS, DVD players, etc.)**
2. **Vehicle is not driven regularly and/or only driven short distances.**

In these cases, the battery may need to be charged to maintain battery health.

⚠ WARNING

- **Do not expose the battery to flames, an electrical spark or a cigarette. Hydrogen gas generated by the battery is explosive. Explosive gases can cause blindness or injury. Do not allow battery fluid to contact your skin, eyes, fabrics or painted surfaces. Sulfuric acid can cause blindness or injury. After touching a battery or battery cap, do not touch or rub your eyes. Thoroughly wash your hands. If the acid contacts your eyes, skin or clothing, immediately flush with water for at least 15 minutes and seek medical attention.**
- **When working on or near a battery, always wear suitable eye protection and remove all jewelry.**
- **Battery posts, terminals and related accessories contain lead and lead compounds. Wash hands after handling.**
- **Keep battery out of the reach of children.**
- **Do not tip the battery.**

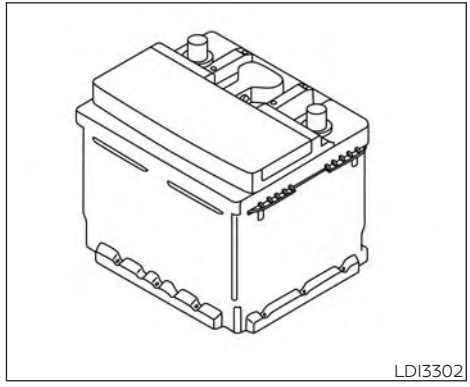

NOTE:

Do not try to open the top of the battery.

This battery is not equipped with removable vent caps.

JUMP STARTING

If jump starting is necessary, refer to "Jump starting" in the "In case of emergency" section of this manual. If the engine does not start by jump starting, the battery may have to be replaced. It is recommended that you visit a NISSAN dealer for this service.

VARIABLE VOLTAGE CONTROL SYSTEM

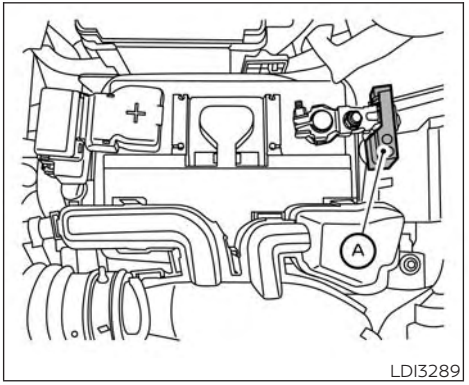

LDI3289

⚠ CAUTION

- **Do not ground accessories directly to the battery terminal. Doing so will bypass the variable voltage control system and the vehicle battery may not charge completely.**
- **Use electrical accessories with the engine running to avoid discharging the vehicle battery.**

Your vehicle is equipped with a variable voltage control system. This system measures the amount of electrical discharge from the battery and controls voltage generated by the generator.

The current sensor Ⓐ is located near the battery along the negative battery cable. If you add electrical accessories to your vehicle, be sure to ground them to a suitable body ground such as the frame or engine block area.

DRIVE BELT

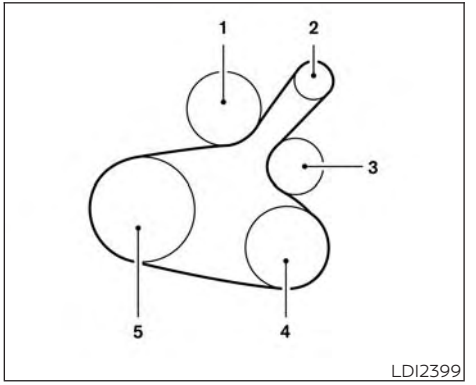

LDI2399

1. Water pump pulley
2. Generator pulley
3. Manual tensioner pulley
4. Air conditioner compressor pulley
5. Crankshaft pulley

⚠ WARNING

Be sure the ignition switch is placed in the OFF or LOCK position before servicing drive belt. The engine could rotate unexpectedly.

1. Visually inspect the belt for signs of unusual wear, cuts, or fraying. If the belt is in poor condition, have it replaced or adjusted. It is recommended that you visit a NISSAN dealer for this service.
2. Have the belt checked regularly for condition.

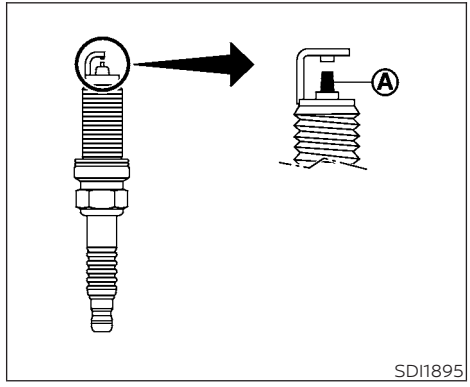

REPLACING SPARK PLUGS

Platinum-tipped spark plugs

It is not necessary to replace platinum-tipped Ⓐ spark plugs as frequently as conventional type spark plugs because they last much longer. Follow the maintenance log shown in the "Maintenance and schedules" section of this manual. Do not service platinum-tipped spark plugs by cleaning or regapping.

- **Always replace spark plugs with recommended or equivalent ones.**

⚠ WARNING

Be sure the engine and ignition switch are off and that the parking brake is engaged securely.

⚠ CAUTION

Be sure to use the correct socket to remove the spark plugs. An incorrect socket can damage the spark plugs.

If replacement is required, it is recommended that you visit a NISSAN dealer for this service.

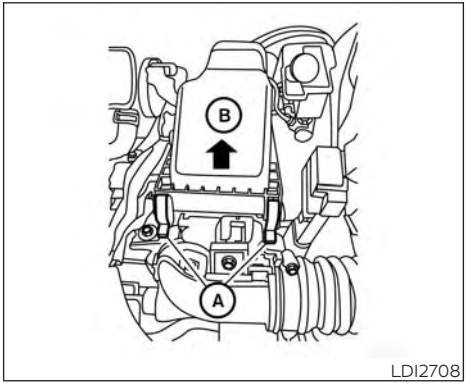

LDI2708

WARNING

- **Operating the engine with the air cleaner filter off can cause you or others to be burned. The air cleaner filter not only cleans the intake air, it also stops the flame if the engine backfires. If the air cleaner is not installed and the engine backfires, you could be burned. Never drive with the air cleaner filter off. Be cautious working on the engine when the air cleaner is off.**
- **Never pour fuel into the throttle body or attempt to start the engine with the air cleaner removed. Doing so could result in serious injury.**

To remove the filter from the air cleaner, release the retaining clips Ⓐ, then release the holders at the back of the unit. Pull the unit upward Ⓑ.

The viscous paper type filter element should not be cleaned and reused. Replace the air filter according to the maintenance log shown in the "Maintenance and schedules" section of this manual.

When replacing the air filter, wipe the inside of the air cleaner housing and the cover with a damp cloth.

NOTE:

After installing a new air cleaner filter, make sure the air cleaner cover is seated in the housing and latch the clips Ⓐ.

CLEANING

If your windshield is not clear after using the windshield-washer or if a wiper blade chatters when running, wax or other material may be on the blade or windshield.

Clean the outside of the windshield with a washer fluid or a mild detergent. Your windshield is clean if beads do not form when rinsing with clear water.

Clean each blade by wiping it with a cloth soaked in a washer fluid or a mild detergent. Then rinse the blades with clear water. If your windshield is still not clear after cleaning the blades and using the wiper, install new windshield wiper blades.

CAUTION

Worn windshield wiper blades can damage the windshield and impair driver vision.

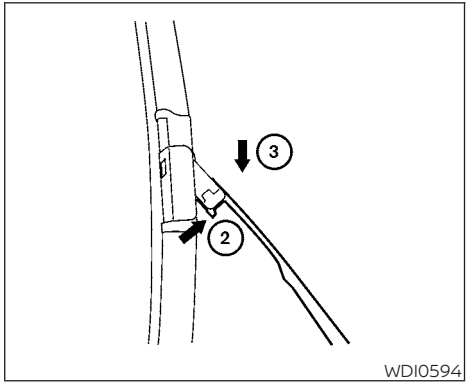

REPLACING

Replace the wiper blades if they are worn.

1. Lift the wiper arm away from the windshield.

② Push the release tab, then move the wiper blade down the wiper arm to remove.

③ Remove the wiper blade.

4. Insert the new wiper blade onto the wiper arm until it clicks into place.
5. Rotate the wiper blade so the dimple is in the groove.
6. Return the wiper to its original position and release it until it has made contact with the windshield.

⚠ CAUTION

- **After wiper blade replacement, return the wiper arm to its original position; otherwise it may be damaged when the hood is opened.**
- **Make sure the wiper blades contact the glass; otherwise the arms may be damaged from wind pressure.**

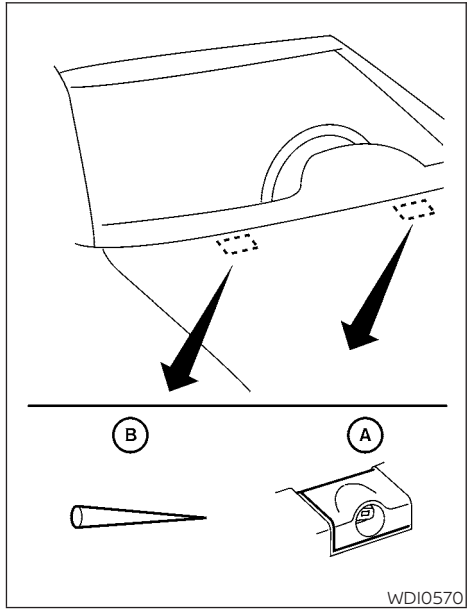

If you wax the surface of the hood, be careful not to let wax get into the windshield washer nozzle Ⓐ. This may cause clogging or improper windshield washer operation. If wax gets into the nozzle, remove it with a needle or small pin Ⓑ.

Rear window wiper blade

If checking or replacement is required, it is recommended that you visit a NISSAN dealer for this service.

If the brakes do not operate properly, have the brakes checked. It is recommended that you visit a NISSAN dealer for this service.

Self-adjusting brakes

Your vehicle is equipped with self-adjusting brakes.

The front disc-type brakes self-adjust every time the brake pedal is applied. The rear drum-type brakes self-adjust every time the parking brake is applied.

⚠ WARNING

Have your brake system checked if the brake pedal height does not return to normal. It is recommended that you visit a NISSAN dealer for this service.

Brake pad wear indicators

The disc brake pads on your vehicle have audible wear indicators. When a brake pad requires replacement, a high pitched scraping or screeching sound will be heard when the vehicle is in motion. The noise will be heard whether or not the brake pedal is depressed. Have the brakes checked as soon as possible if the wear indicator sound is heard.

Under some driving or climate conditions, occasional brake squeak, squeal or other noise may be heard. Occasional brake noise during light to moderate stops is normal and does not affect the function or performance of the brake system.

Proper brake inspection intervals should be followed. For additional information regarding brake inspections, refer to the appropriate maintenance schedule information in the "Maintenance and schedules" section of this manual.

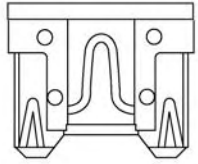

LDI2385

If any electrical equipment does not operate, check for an open fuse.

Fuses are used in the passenger compartment. Spare fuses are provided and can be found in the passenger compartment fuse box.

When installing a fuse make sure the fuse is installed in the fuse box securely.

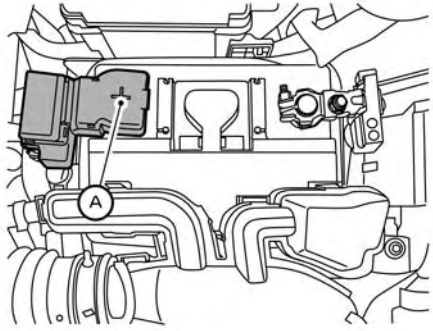

LDI3290

ENGINE COMPARTMENT

Fusible links

If any electrical equipment does not operate and the fuses are in good condition, check the fusible links Ⓐ in the holder. If any of the fusible links are melted, replace only with Genuine NISSAN parts.

For checking and replacing the fusible links, it is recommended that you visit a NISSAN dealer for this service.

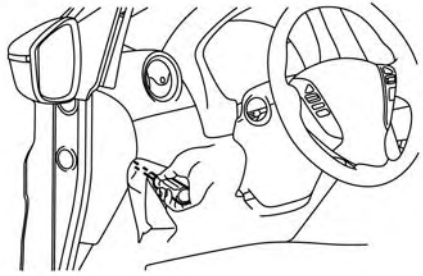

LDI3306

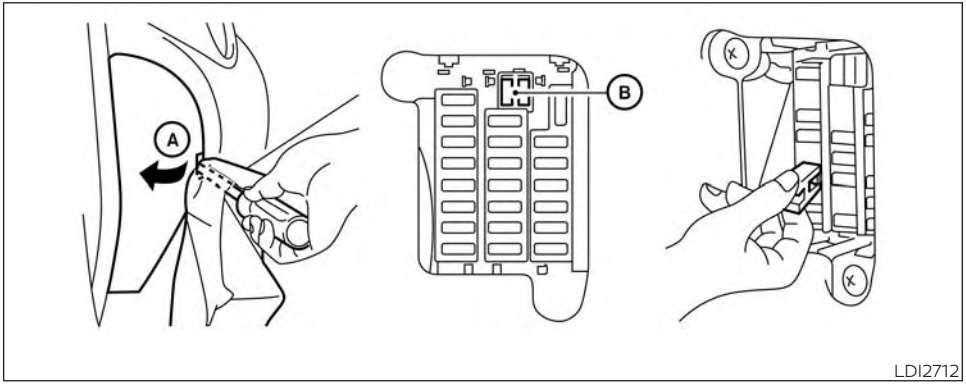

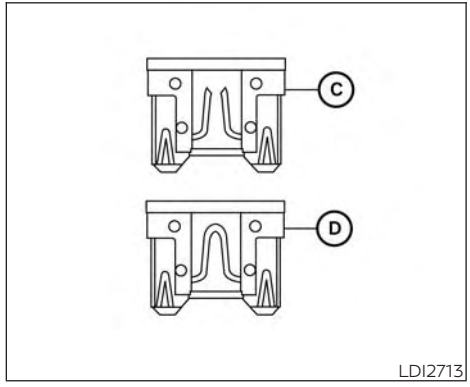

PASSENGER COMPARTMENT

⚠WARNING

Never use a fuse of higher or lower amperage rating than that specified on the fuse box cover. This could damage the electrical system or electronic control units or cause a fire.

If any electrical equipment does not operate, check for an open fuse.

NOTE:

The fuse box is located on the driver's side of the instrument panel.

1. Be sure the ignition switch and the headlight switch are OFF.
2. Remove the fuse box cover Ⓐ with a suitable tool. Use a cloth to avoid damaging the trim.
3. Locate the fuse that needs to be replaced.
4. Remove the fuse with the fuse puller Ⓑ.
5. If the fuse is open Ⓒ, replace it with an equivalent good fuse Ⓓ.
6. Push the fuse box cover to install.

If a new fuse also opens, have the electrical system checked and repaired. It is recommended that you visit a NISSAN dealer for this service.

NOTE:

Your vehicle may not be equipped with all fuses listed on the fuse label.

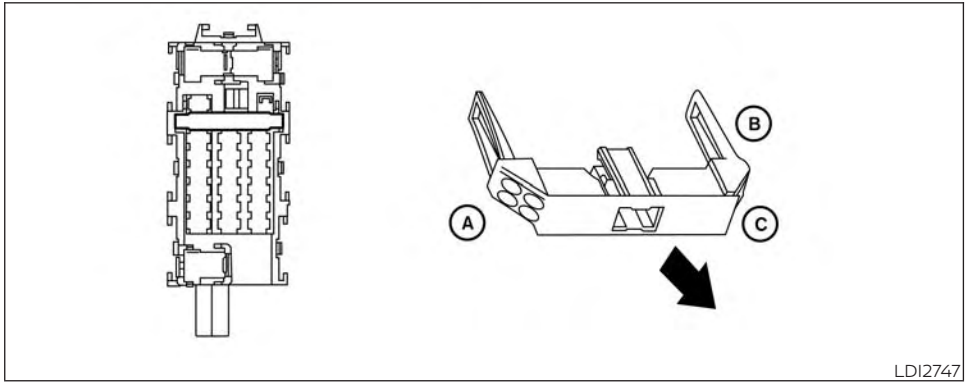

Extended storage switch

If any electrical equipment does not operate, remove the extended storage switch and check for an open fuse.

NOTE:

The extended storage switch is used for long term vehicle storage. Even if the extended storage switch is broken it is not necessary to replace it. Replace only the open fuse in the switch with a new fuse.

How to replace the extended storage switch:

1. To remove the extended storage switch, be sure the ignition switch is in the OFF or LOCK position.
2. Be sure the headlight switch is in the OFF position.
3. Remove the fuse box cover.
4. Pinch the locking tabs Ⓐ and Ⓑ found on each side of the storage switch.
5. Pull the storage switch straight out from the fuse box Ⓒ.

NOTE:

Your vehicle may not be equipped with all fuses listed on the fuse label.

⚠ CAUTION

Be careful not to allow children to swallow the battery or removed parts.

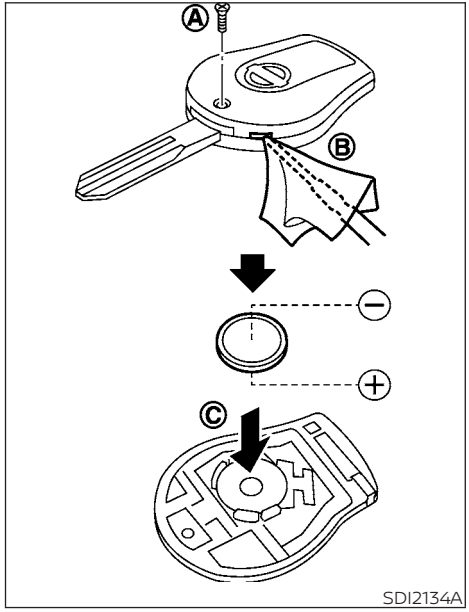

KEY FOB (if so equipped)

Replace the battery in the key fob as follows:

1. Remove the screw Ⓐ.
2. Insert a small screwdriver into the slit of the corner Ⓑ and twist it to separate the upper part from the lower part. Use a cloth to protect the casing.
3. Replace the battery with a new one.
   - Do not touch the internal circuit and electric terminals as doing so could cause a malfunction.
   - Make sure that the + side faces the bottom of the case Ⓒ.

Recommended battery: CR1620 or equivalent.

4. Close the lid and install the screw securely.
5. Operate the buttons to check its operation.

If you need assistance for replacement, it is recommended that you visit a NISSAN dealer for this service.

If the battery is removed for any reason other than replacement, perform step 5.

- An improperly disposed battery can hurt the environment. Always confirm local regulations for battery disposal.
- The key fob is water-resistant; however, if it does get wet, immediately wipe completely dry.
- The operational range of the key fob extends to approximately 33 ft (10 m) from the vehicle. This range may vary with conditions.

Operation is subject to the following two conditions: (1) This device may not cause harmful interference, and (2) this device must accept any interference received, including interference that may cause undesired operation of the device.

FCC Notice:

For USA:
This device complies with Part 15 of the FCC Rules. Operation is subject to the following two conditions: (1) This device may not cause harmful interference, and (2) this device must accept any interference received, including interference that may cause undesired operation.

Note:

Changes or modifications not expressly approved by the party responsible for compliance could void the user's authority to operate the equipment.

For Canada:
This device complies with Industry Canada licence-exempt RSS standard(s). Operation is subject to the following two conditions: (1) this device may not cause interference, and (2) this device must accept any interference, including interference that may cause undesired operation of the device.

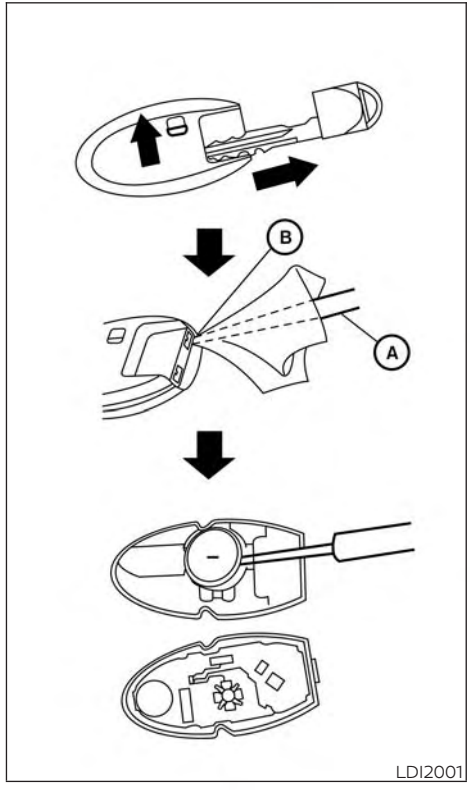

LDI2001

NISSAN INTELLIGENT KEY® (if so equipped)

Replace the battery in the Intelligent Key as follows:

1. Remove the mechanical key from the Intelligent Key.
2. Insert a small flathead screwdriver Ⓐ into the slit Ⓑ of the corner and twist it to separate the upper part from the lower part. Place a cloth over the screwdriver to protect the casing.

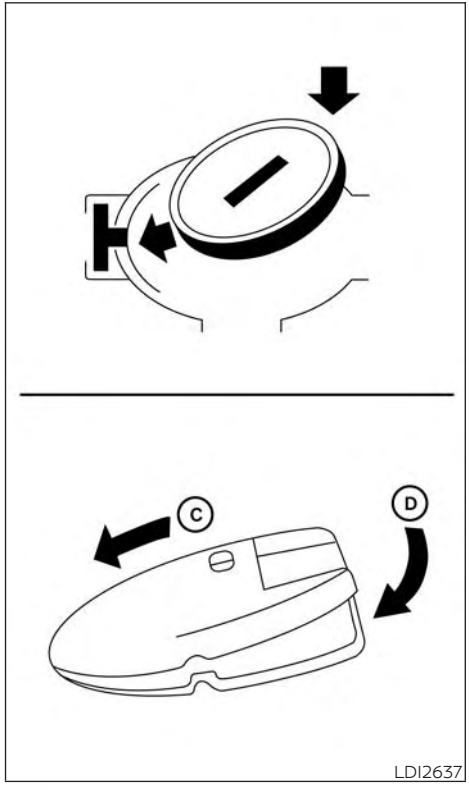

3. Replace the battery with a new one.

   Recommended battery: CR2025 or equivalent.

   - Do not touch the internal circuit and electric terminals as doing so could cause a malfunction.
   - Hold the battery by the edges. Holding the battery across the contact points will seriously deplete the storage capacity.
   - Make sure that the + side faces the bottom of the lower part.
4. Close the lid securely as illustrated with Ⓒ and Ⓓ.
5. Operate the buttons to check the operation.

If you need assistance for replacement, it is recommended that you visit a NISSAN dealer for this service.

FCC Notice:

For USA:
This device complies with Part 15 of the FCC Rules. Operation is subject to the following two conditions: (1) This device may not cause harmful interference, and (2) this device must accept any interference received, including interference that may cause undesired operation.

Note:

Changes or modifications not expressly approved by the party responsible for compliance could void the user's authority to operate the equipment.

For Canada:
This device complies with Industry Canada licence-exempt RSS standard(s). Operation is subject to the following two conditions: (1) this device may not cause interference, and (2) this device must accept any interference, including interference that may cause undesired operation of the device.

HEADLIGHTS

For additional information on headlight bulb replacement, refer to the instructions outlined in this section.

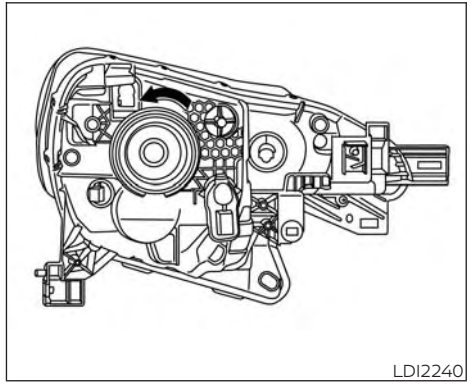

Replacing the halogen headlight bulb

The headlight is a semi-sealed beam type which uses a replaceable headlight (halogen) bulb. They can be replaced from inside the engine compartment without removing the headlight assembly.

⚠ CAUTION

- **High-pressure halogen gas is sealed inside the bulb. The bulb may break if the glass envelope is scratched or the bulb is dropped.**
- **Aiming should not be necessary after replacing the bulb. When aiming adjustment is necessary, it is recommended that you visit a NISSAN dealer for this service.**
- **Do not leave the headlight assembly open without a bulb installed for a long period of time. Dust, moisture, smoke, etc. entering the headlight body may affect bulb performance. Remove the bulb from the headlight assembly just before a replacement bulb is installed.**
- **Only touch the base when handling the bulb. Never touch the glass envelope. Touching the glass could significantly affect bulb life and/or headlight performance.**
- **Use the same number and wattage as shown in the chart.**

1. Disconnect the battery negative cable.
2. Disconnect the electrical connector from the rear end of the bulb.
3. Rotate the retaining pin counterclockwise to loosen it.
4. Remove the headlight bulb. Do not shake or rotate the bulb when removing it.
5. Install the new bulb in the reverse order of removal.

Fog may temporarily form inside the lens of the exterior lights in the rain or in a car wash. A temperature difference between the inside and the outside of the lens causes the fog. This is not a malfunction. If large drops of water collect inside the lens, it is recommended that you visit a NISSAN dealer for servicing.

FOG LIGHTS (if so equipped)

For additional information on fog light bulb replacement, refer to the instructions outlined in this section.

Replacing the fog light bulb

If replacement is required, it is recommended that you visit a NISSAN dealer for this service.

⚠ CAUTION

- **High pressure halogen gas is sealed inside the halogen bulb. The bulb may break if the glass envelope is scratched or the bulb is dropped.**
- **When handling the bulb, do not touch the glass envelope.**
- **Use the same number and wattage as originally installed as shown in the chart.**
- **Do not leave the bulb out of the fog light for a long period of time as dust, moisture and smoke may enter the fog light body and affect the performance of the fog light.**

EXTERIOR AND INTERIOR LIGHTS

Item	Wattage (W)	Bulb No.
Headlight assembly		
High/Low/Daytime running light (Canada only)	65/55	HB5
Turn/Position	27/7	3457 AK
Side marker	5	W5W
Fog light (if so equipped)*	35	H8
Door mirror turn signal light (if so equipped)*	—	—
Map light	5	W5W
Room light	8	—
Cargo light*	5	W5W
High-mounted stop light*	—	—
Rear combination light*		
Turn	21	WY21W
Stop/Tail	21/5	W21/5W
Backup (reversing)	21	W21W
License plate light*	5	W5W

Always check with the Parts Department at a NISSAN dealer for the latest parts information.

*If replacement is required it is recommended that you visit a NISSAN dealer for this service.

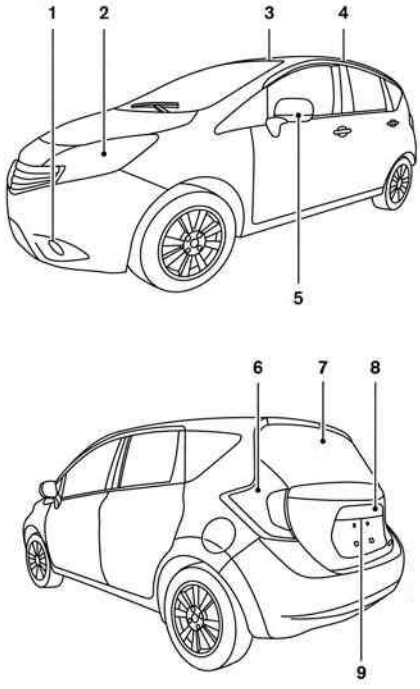

LDI2796

1. Fog light (if so equipped)
2. Headlight assembly
3. Map light
4. Room light
5. Door mirror turn signal light (if so equipped)
6. Rear combination light
7. High-mounted stop light
8. Cargo light
9. License plate light

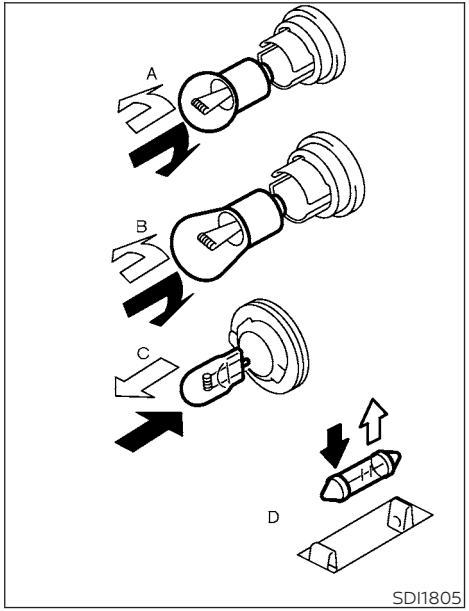

Replacement procedures

All other lights are either type A, B, C or D. When replacing a bulb, first remove the lens, lamp and/or cover.

⇧ Indicates bulb removal
⬆ Indicates bulb installation

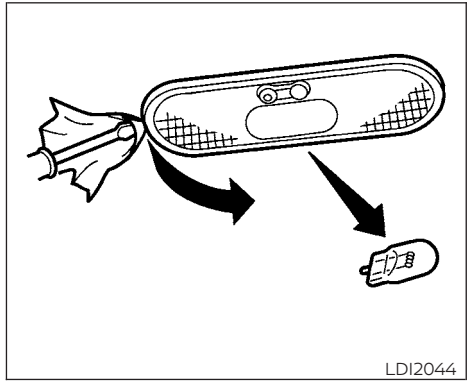

Map light

Use a cloth to protect the housing.

If you have a flat tire, refer to "Flat tire" in the "In case of emergency" section of this manual.

TIRE PRESSURE

Tire Pressure Monitoring System (TPMS) (if so equipped)

⚠WARNING

Radio waves could adversely affect electric medical equipment. Those who use a pacemaker should contact the electric medical equipment manufacturer for the possible influences before use.

This vehicle is equipped with the Tire Pressure Monitoring System (TPMS). It monitors tire pressure of all tires except the spare. When the low tire pressure warning light is lit, and the CHECK TIRE PRES (pressure) warning message displays in the odometer, one or more of your tires is significantly under-inflated.

The TPMS will activate only when the vehicle is driven at speeds above 16 mph (25 km/h). Also, this system may not detect a sudden drop in tire pressure (for example a flat tire while driving).

For additional information, refer to "Low tire pressure warning light" in the "Instruments and controls" section, "Tire Pressure Monitoring System (TPMS)" in the "Starting and driving" section, and "Flat tire" in the "In case of emergency" section of this manual.

Tire inflation pressure

Check the tire pressures (including the spare) often and always prior to long distance trips. The recommended tire pressure specifications are shown on the F.M.V.S.S./C.M.V.S.S. certification label or the Tire and Loading Information label under the "Cold Tire Pressure" heading. The Tire and Loading Information label is affixed to the driver side center pillar.

Tire pressures should be checked regularly because:

- Most tires naturally lose air over time.
- Tires can lose air suddenly when driven over potholes or other objects or if the vehicle strikes a curb while parking.

The tire pressures should be checked when the tires are cold. The tires are considered COLD after the vehicle has been parked for 3 or more hours, or driven less than 1 mile (1.6 km) at moderate speeds.

The TPMS with Easy-Fill Tire Alert (if so equipped) provides visual and audible signals outside the vehicle for inflating tires to the recommended COLD tire pressure. For additional information, refer to "TPMS with Easy-Fill Tire Alert" in the "Starting and driving" section of this manual.

Incorrect tire pressure, including under inflation, may adversely affect tire life and vehicle handling.

⚠ WARNING

- **Improperly inflated tires can fail suddenly and cause an accident.**
- **The Gross Vehicle Weight Rating (GVWR) is located on the F.M.V.S.S./C.M.V.S.S. certification label. The vehicle weight capacity is indicated on the Tire and Loading Information label. Do not load your vehicle beyond this capacity. Overloading your vehicle may result in reduced tire life, unsafe operating conditions due to premature tire failure, or unfavorable handling characteristics and could also lead to a serious accident. Loading beyond the specified capacity may also result in failure of other vehicle components.**
- **Before taking a long trip, or whenever you heavily load your vehicle, use a tire pressure gauge to ensure that the tire pressures are at the specified level.**
- **For additional information regarding tires, refer to "Important Tire Safety Information" (US) or "Tire Safety Information" (Canada) in the Warranty Information Booklet.**

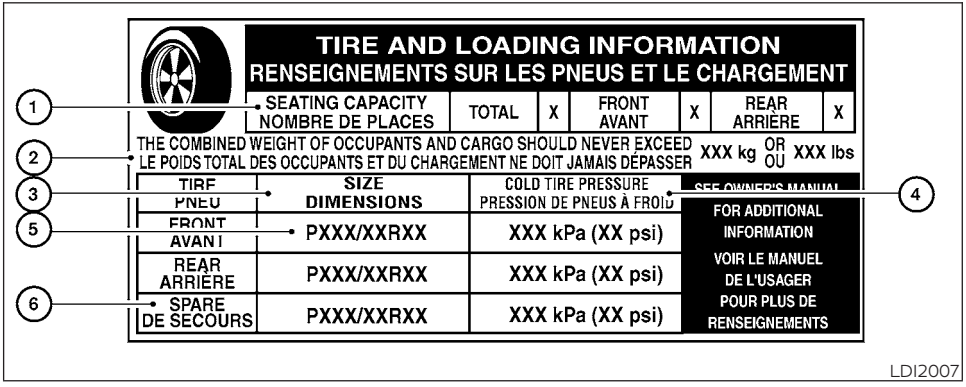

Tire and Loading Information label

① Seating capacity: The maximum number of occupants that can be seated in the vehicle.

② Vehicle load limit: Refer to "Vehicle loading information" in the "Technical and consumer information" section.

③ Tire size – refer to "Tire labeling" in this section.

④ Cold tire pressure: Inflate the tires to this pressure when the tires are cold. Tires are considered COLD after the vehicle has been parked for 3 or more hours, or driven less than 1 mile (1.6 km) at moderate speeds. The recommended cold tire inflation is set by the manufacturer to provide the best balance of tire wear, vehicle handling, driveability, tire noise, etc., up to the vehicle's GVWR.

⑤ Original tire size: The size of the tires originally installed on the vehicle at the factory.

⑥ Spare tire size.

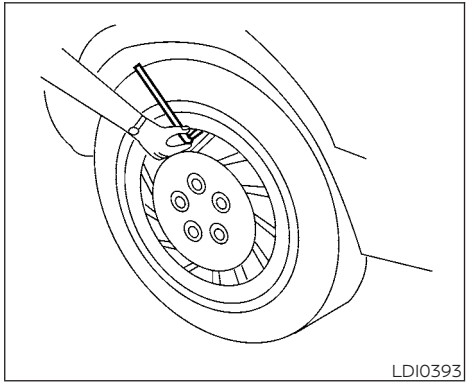

Checking tire pressure

1. Remove the valve stem cap from the tire.
2. Press the pressure gauge squarely onto the valve stem. Do not press too hard or force the valve stem sideways, or air will escape. If the hissing sound of air escaping from the tire is heard while checking the pressure, reposition the gauge to eliminate this leakage.
3. Remove the gauge.
4. Read the tire pressure on the gauge stem and compare to the specification shown on the Tire and Loading Information label.
5. Add air to the tire as needed. If too much air is added, press the core of the valve stem briefly with the tip of the gauge stem to release pressure. Recheck the pressure and add or release air as needed.
6. Install the valve stem cap.
7. Check the pressure of all other tires, including the spare.

Size	Cold Tire Inflation Pressure
Front Original Tire: P185/65R15 P195/55R16	230 kPa, 33 PSI
Rear Original Tire: P185/65R15 P195/55R16	230 kPa, 33 PSI
T125/70D15	420 kPa, 60 PSI

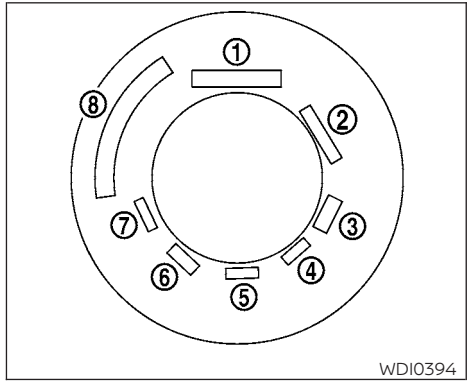

Example

TIRE LABELING

Federal law requires tire manufacturers to place standardized information on the sidewall of all tires. This information identifies and describes the fundamental characteristics of the tire and also provides the Tire Identification Number (TIN) for safety standard certification. The TIN can be used to identify the tire in case of a recall.

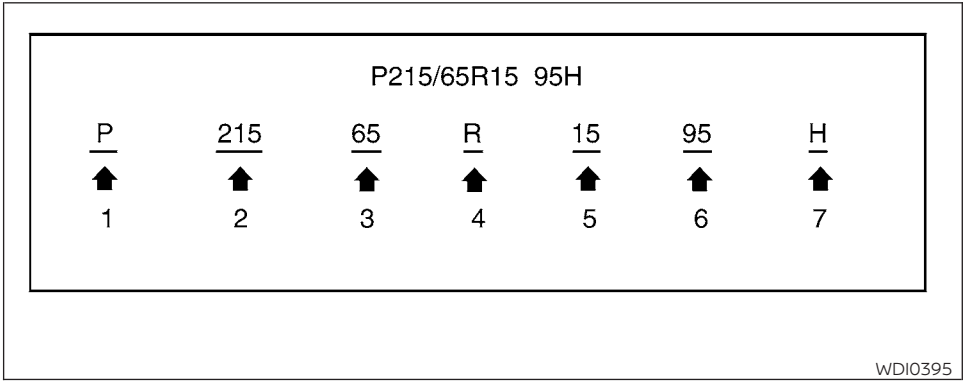

Example

① Tire size (example: P215/65R15 95H)

1. P: The "P" indicates the tire is designed for passenger vehicles (not all tires have this information).
2. Three-digit number (215): This number gives the width in millimeters of the tire from sidewall edge to sidewall edge.
3. Two-digit number (65): This number, known as the aspect ratio, gives the tire's ratio of height to width.
4. R: The "R" stands for radial.
5. Two-digit number (15): This number is the wheel or rim diameter in inches.
6. Two- or three-digit number (95): This number is the tire's load index. It is a measurement of how much weight each tire can support. You may not find this information on all tires because it is not required by law.
7. H: Tire speed rating. You should not drive the vehicle faster than the tire speed rating.

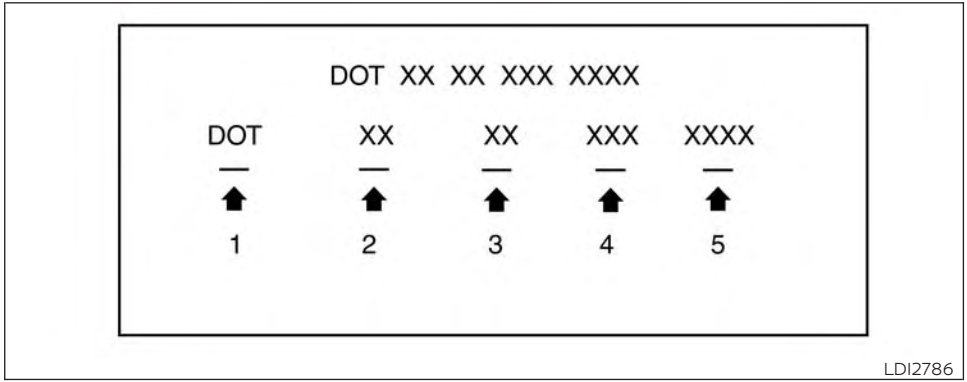

Example

② TIN (Tire Identification Number) for a new tire (example: DOT XX XX XXX XXXX)

1. DOT: Abbreviation for the "Department Of Transportation". The symbol can be placed above, below or to the left or right of the Tire Identification Number.
2. Two-digit code: Manufacturer's identification mark.
3. Two-digit code: Tire size.
4. Three-digit code: Tire type code (Optional).
5. Four numbers represent the week and year the tire was built. For example, the numbers 3103 means the 31st week of 2003. If these numbers are missing then look on the other sidewall of the tire.

③ Tire ply composition and material

The number of layers or plies of rubber-coated fabric in the tire. Tire manufacturers also must indicate the materials in the tire, which include steel, nylon, polyester and others.

④ Maximum permissible inflation pressure

This number is the greatest amount of air pressure that should be put in the tire. Do not exceed the maximum permissible inflation pressure.

⑤ Maximum load rating

This number indicates the maximum load in kilograms and pounds that can be carried by the tire. When replacing the tires on the vehicle, always use a tire that has the same load rating as the factory installed tire.

⑥ Term of “tubeless” or “tube type”

Indicates whether the tire requires an inner tube (“tube type”) or not (“tubeless”).

⑦ The word “radial”

The word “radial” is shown if the tire has radial structure.

⑧ Manufacturer or brand name

Manufacturer or brand name is shown.

Other Tire-related Terminology

In addition to the many terms that are defined throughout this section, Intended Outboard Sidewall is (1) the sidewall that contains a whitewall, bears white lettering or bears manufacturer, brand, and/or model name molding that is higher or deeper than the same molding on the other sidewall of the tire, or (2) the outward facing sidewall of an asymmetrical tire that has a particular side that must always face outward when mounted on a vehicle.

TYPES OF TIRES

⚠ WARNING

- **When changing or replacing tires, be sure all four tires are of the same type (i.e., Summer, All Season or Snow) and construction. A NISSAN dealer may be able to help you with information about tire type, size, speed rating and availability.**
- **Replacement tires may have a lower speed rating than the factory equipped tires, and may not match the potential maximum vehicle speed. Never exceed the maximum speed rating of the tire.**
- **Replacing tires with those not originally specified by NISSAN could affect the proper operation of the Tire Pressure Monitoring System (TPMS) (if so equipped).**
- **Always use tires of the same type, size, brand, construction and tread pattern on all four wheels. Failure to do so may result in a circumference difference between tires on the front and rear axles which can cause the Vehicle Dynamic Control (VDC) system to malfunction resulting in personal injury or death, excessive tire wear and may damage the transmission and differential gears.**
- **For additional information regarding tires, refer to “Important Tire Safety Information” (US) or “Tire Safety Information” (Canada) in the Warranty Information Booklet.**

All season tires

NISSAN specifies All Season tires on some models to provide good performance all year, including snowy and icy road conditions. All Season tires are identified by ALL SEASON and/or M&S on the tire sidewall. Snow tires have better snow traction than All Season tires and may be more appropriate in some areas.

Summer tires

NISSAN specifies summer tires on some models to provide superior performance on dry roads. Summer tire performance is substantially reduced in snow and ice. Summer tires do not have the tire traction rating "M&S" on the tire sidewall.

If you plan to operate your vehicle in snowy or icy conditions, NISSAN recommends the use of SNOW tires or ALL SEASON tires on all four wheels.

Snow tires

If snow tires are needed, it is necessary to select tires equivalent in size and load rating to the original equipment tires. If you do not, it can adversely affect the safety and handling of your vehicle.

Generally, snow tires have lower speed ratings than factory equipped tires and may not match the potential maximum vehicle speed. Never exceed the maximum speed rating of the tire.

If you install snow tires, they must be the same size, brand, construction and tread pattern on all four wheels.

For additional traction on icy roads, studded tires may be used. However, some U.S. states and Canadian provinces prohibit their use. Check local, state and provincial laws before installing studded tires. Skid and traction capabilities of studded snow tires on wet or dry surfaces may be poorer than that of non-studded snow tires.

TIRE CHAINS

Use of tire chains may be prohibited according to location. Check the local laws before installing tire chains. When installing tire chains, make sure they are the proper size for the tires on your vehicle and are installed according to the chain manufacturer's suggestions. **Use only SAE class "S" chains.** Class "S" chains are used on vehicles with restricted tire to vehicle clearance. Vehicles that can use Class "S" chains are designed to meet the minimum clearances between the tire and the closest vehicle suspension or body component required to accommodate the use of a winter traction device (tire chains or cables). The minimum clearances are determined using the factory equipped tires. Other types may damage your vehicle. Use chain tensioners when recommended by the tire chain manufacturer to ensure a tight fit. Loose end links of the tire chain must be secured or removed to prevent the possibility of whipping action damage to the fenders or underbody. If possible, avoid fully loading your vehicle when using tire chains. In addition, drive at a reduced speed. Otherwise, your vehicle may be damaged and/or vehicle handling and performance may be adversely affected.

Tire chains must be installed only on the front wheels and not on the rear wheels.

Never install tire chains on a TEMPORARY USE ONLY spare tire.

Do not use tire chains on dry roads. Driving with chains in such conditions can cause damage to the various mechanisms of the vehicle due to some overstress.

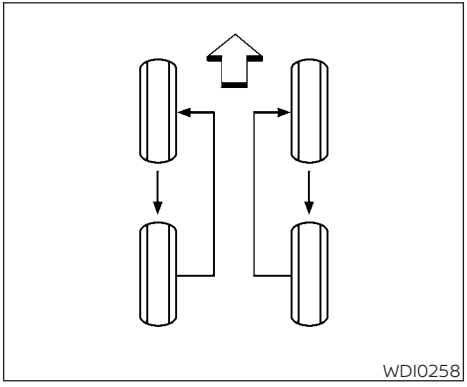

CHANGING WHEELS AND TIRES

Tire rotation

NISSAN recommends rotating the tires every 5,000 miles (8,000 km).

For additional information on tire replacing procedures, refer to "Flat tire" in the "In case of emergency" section of this manual.

As soon as possible, tighten the wheel nuts to the specified torque with a torque wrench.

Wheel nut tightening torque:
83 ft-lb (113 N·m)

The wheel nuts must be kept tightened to specifications at all times. It is recommended that wheel nuts be tightened to specification at each tire rotation interval.

⚠ WARNING

- **After rotating the tires, check and adjust the tire pressure.**
- **Retighten the wheel nuts when the vehicle has been driven for 600 miles (1,000 km) (also in cases of a flat tire, etc.).**
- **Do not include the spare tire in the tire rotation.**
- **For additional information regarding tires, refer to "Important Tire Safety Information" (US) or "Tire Safety Information" (Canada) in the Warranty Information Booklet.**

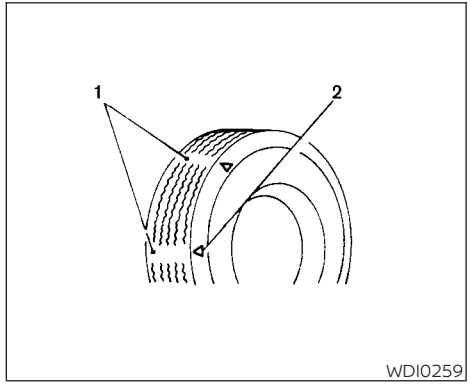

Tire wear and damage

1. Wear indicator
2. Location mark

⚠WARNING

- **Tires should be periodically inspected for wear, cracking, bulging or objects caught in the tread. If excessive wear, cracks, bulging or deep cuts are found, the tire(s) should be replaced.**
- **The original tires have built-in tread wear indicators. When the wear indicators are visible, the tire(s) should be replaced.**
- **Tires degrade with age and use. Have tires, including the spare, over 6 years old checked by a qualified technician because some tire damage may not be obvious. Replace the tires as necessary to prevent tire failure and possible personal injury.**
- **Improper service of the spare tire may result in serious personal injury. If it is necessary to repair the spare tire, it is recommended that you visit a NISSAN dealer for this service.**

- **For additional information regarding tires, refer to "Important Tire Safety Information" (US) or "Tire Safety Information" (Canada) in the Warranty Information Booklet.**

Replacing wheels and tires

When replacing a tire, use the same size, tread design, speed rating and load carrying capacity as originally equipped. For additional information, refer to "Wheels and tires" in the "Technical and consumer information" section of this manual.

⚠WARNING

- **The use of tires other than those recommended or the mixed use of tires of different brands, construction (bias, bias-belted or radial), or tread patterns can adversely affect the ride, braking, handling, Vehicle Dynamic Control (VDC) system, ground clearance, body-to-tire clearance, tire chain clearance, speedometer calibration, headlight aim and bumper height. Some of these effects may lead to accidents and could result in serious personal injury.**
- **If your vehicle was originally equipped with four tires that were the same size and you are only replacing two of the four tires, install the new tires on the rear axle. Placing new tires on the front axle may cause loss of vehicle control in some driving conditions and cause an accident and personal injury.**
- **If the wheels are changed for any reason, always replace with wheels which have the same off-set dimension. Wheels of a different off-set could cause premature tire wear, degrade vehicle handling characteristics, affect the VDC system and/or interference with the brake discs/drums. Such interference can lead to decreased braking efficiency and/or early brake pad wear. For additional information on wheel off-set dimensions, refer to "Wheels and tires" in the "Technical and consumer information" section of this manual.**

- **When replacing a wheel without the TPMS, such as the spare tire, the TPMS will not function and the low tire pressure warning light will flash for approximately 1 minute. The light will remain on after 1 minute. Have your tires replaced and/or TPMS system reset as soon as possible. It is recommended that you visit a NISSAN dealer for this service.**
- **Replacing tires with those not originally specified by NISSAN could affect the proper operation of the TPMS (if so equipped).**
- **The TPMS sensor may be damaged if it is not handled correctly. Be careful when handling the TPMS sensor.**
- **When replacing the TPMS sensor, the ID registration may be required. Contact a NISSAN dealer for ID registration.**
- **Do not use a valve stem cap that is not specified by NISSAN. The valve stem cap may become stuck.**
- **Be sure that the valve stem caps are correctly fitted. Otherwise the valve may be clogged up with dirt and cause a malfunction or loss of pressure.**
- **Do not install a damaged or deformed wheel or tire even if it has been repaired. Such wheels or tires could have structural damage and could fail without warning.**
- **The use of retread tires is not recommended.**
- **For additional information regarding tires, refer to "Important Tire Safety Information" (US) or "Tire Safety Information" (Canada) in the Warranty Information Booklet.**

Wheel balance

Unbalanced wheels may affect vehicle handling and tire life. Even with regular use, wheels can get out of balance. Therefore, they should be balanced as required.

Wheel balance service should be performed with the wheels off the vehicle. Spin balancing the wheels on the vehicle could lead to mechanical damage.

- **For additional information regarding tires, refer to "Important Tire Safety Information" (US) or "Tire Safety Information" (Canada) in the Warranty Information Booklet.**

Care of wheels

- Wash the wheels when washing the vehicle to maintain their appearance.
- Clean the inner side of the wheels when the wheel is changed or the underside of the vehicle is washed.
- Do not use abrasive cleaners when washing the wheels.
- Inspect wheel rims regularly for dents or corrosion. Such damage may cause loss of pressure or poor seal at the tire bead.
- NISSAN recommends waxing the road wheels to protect against road salt in areas where it is used during winter.

Spare tire (TEMPORARY USE ONLY spare tire)

When replacing a wheel without the TPMS such as the spare tire, the TPMS will not function.

Observe the following precautions if the TEMPORARY USE ONLY spare tire must be used. Otherwise, your vehicle could be damaged or involved in an accident:

⚠ WARNING

- **The spare tire should be used for emergency use only. It should be replaced with the standard tire at the first opportunity to avoid possible tire or differential damage.**
- **Drive carefully while the TEMPORARY USE ONLY spare tire is installed. Avoid sharp turns and abrupt braking while driving.**
- **Periodically check spare tire inflation pressure. Always keep the pressure of the TEMPORARY USE ONLY spare tire at 420 kPa, 4.2 bar (60 psi).**
- **With the TEMPORARY USE ONLY spare tire installed do not drive the vehicle at speeds faster than 50 mph (80 km/h).**
- **When driving on roads covered with snow or ice, the TEMPORARY USE ONLY spare tire should be used on the rear wheels and the original tire used on the front wheels (drive wheels).**
- **Tire tread of the TEMPORARY USE ONLY spare tire will wear at a faster rate than the standard tire. Replace the spare tire as soon as the tread wear indicators appear.**
- **Do not use the spare tire on other vehicles.**
- **Do not use more than one spare tire at the same time.**
- **Do not tow a trailer when the TEMPORARY USE ONLY spare tire is installed.**

⚠ CAUTION

- **Do not use tire chains on a TEMPORARY USE ONLY spare tire. Tire chains will not fit properly and may cause damage to the vehicle.**
- **Because the TEMPORARY USE ONLY spare tire is smaller than the original tire, ground clearance is reduced. To avoid damage to the vehicle, do not drive over obstacles. Also, do not drive the vehicle through an automatic car wash since it may get caught.**

MEMO

9 Maintenance and schedules

Maintenance requirements 9-2
General maintenance 9-2
Scheduled maintenance 9-2
Where to go for service 9-2
General maintenance 9-2
Explanation of general maintenance items 9-2
Explanation of scheduled maintenance items . . . 9-5
Emission control system maintenance: 9-5
Chassis and body maintenance: 9-6
Maintenance schedules 9-7
Additional maintenance items for severe operating conditions 9-7
Standard maintenance 9-8
Emission control system maintenance 9-8
Chassis & body maintenance 9-10
Maintenance under severe operating conditions 9-12
Severe driving conditions 9-12
Maintenance log 9-13

Some day-to-day and regular maintenance is essential to maintain your vehicle's good mechanical condition, as well as its emissions and engine performance.

It is the owner's responsibility to make sure that the scheduled maintenance, as well as general maintenance, is performed.

As the vehicle owner, you are the only one who can ensure that your vehicle receives proper maintenance. You are a vital link in the maintenance chain.

GENERAL MAINTENANCE

General maintenance includes those items which should be checked during normal day-to-day operation. They are essential for proper vehicle operation. It is your responsibility to perform these procedures regularly as prescribed.

Performing general maintenance checks requires minimal mechanical skill and only a few general automotive tools.

These checks or inspections can be done by yourself, a qualified technician or, if you prefer, a NISSAN dealer.

SCHEDULED MAINTENANCE

The maintenance items listed in this section are required to be serviced at regular intervals. However under severe driving conditions, additional or more frequent maintenance will be required.

WHERE TO GO FOR SERVICE

If maintenance service is required or your vehicle appears to malfunction, have the systems checked and corrected. It is recommended that you visit a NISSAN dealer for this service.

NISSAN technicians are well-trained specialists who are kept up-to-date with the latest service information through technical bulletins, service tips and in-dealership training programs. They are completely qualified to work on NISSAN vehicles **before** they work on your vehicle rather than after they have worked on it.

You can be confident that a NISSAN dealer's service department performs excellent service to meet the maintenance requirements on your vehicle — in a reliable and economical way.

During the normal day-to-day operation of the vehicle, general maintenance should be performed regularly as prescribed in this section. If you detect any unusual sounds, vibrations or smells, be sure to check for the cause or have it checked promptly. In addition, it is recommended that you visit a NISSAN dealer if you think that repairs are required.

When performing any checks or maintenance work, closely observe the "Maintenance precautions" in the "Do-it-yourself" section of this manual.

EXPLANATION OF GENERAL MAINTENANCE ITEMS

Additional information on the following items with " * " is found in the "Do-it-yourself" section of this manual.

Outside the vehicle

The maintenance items listed here should be performed from time to time, unless otherwise specified.

Doors and engine hood: Check that the doors and engine hood operate properly. Also ensure that all latches lock securely. Lubricate hinges, latches, latch pins, rollers and links if necessary. Make sure that the secondary latch keeps the hood from opening when the primary latch is released.

When driving in areas using road salt or other corrosive materials, check lubrication frequently.

Lights*: Clean the headlights on a regular basis. Make sure that the headlights, stop lights, tail lights, turn signal lights, and other lights are all operating properly and installed securely. Also check headlight aim.

Road wheel nuts (lug nuts)*: When checking the tires, make sure no wheel nuts are missing, and check for any loose wheel nuts. Tighten if necessary.

Tire rotation*: Tires should be rotated every 5,000 miles (8,000 km).

Tires*: Check the pressure with a gauge often and always prior to long distance trips. If necessary, adjust the pressure in all tires, including the spare, to the pressure specified. Check carefully for damage, cuts or excessive wear.

Tire Pressure Monitoring System (TPMS) transmitter components (if so equipped): Replace the TPMS transmitter grommet seal, valve core and cap when the tires are replaced due to wear or age.

Wheel alignment and balance: If the vehicle should pull to either side while driving on a straight and level road, or if you detect uneven or abnormal tire wear, there may be a need for wheel alignment. If the steering wheel or seat vibrates at normal highway speeds, wheel balancing may be needed.

For additional information regarding tires, refer to "Important Tire Safety Information" (US) or "Tire Safety Information" (Canada) in the Warranty Information Booklet.

Windshield: Clean the windshield on a regular basis. Check the windshield at least every six months for cracks or other damage. Have a damaged windshield repaired by a qualified repair facility.

Windshield wiper blades*: Check for cracks or wear if they do not wipe properly.

Inside the vehicle

The maintenance items listed here should be checked on a regular basis, such as when performing scheduled maintenance, cleaning the vehicle, etc.

Accelerator pedal: Check the pedal for smooth operation and make sure the pedal does not catch or require uneven effort. Keep the floor mat away from the pedal.

Brake pedal: Check the pedal for smooth operation. If the brake pedal suddenly goes down further than normal, the pedal feels spongy or the vehicle seems to take longer to stop, have your vehicle checked immediately. It is recommended that you visit a NISSAN dealer for this service. Keep the floor mat away from the pedal.

Brakes: Check that the brakes do not pull the vehicle to one side when applied.

Continuously Variable Transmission (CVT) P (Park) position mechanism (if so equipped): On a fairly steep hill check that the vehicle is held securely with the shift lever in the P (Park) position without applying any brakes.

Parking brake: Check the parking brake operation regularly. The vehicle should be securely held on a fairly steep hill with only the parking brake applied. If the parking brake needs adjustment, it is recommended that you visit a NISSAN dealer for this service.

Seats: Check seat position controls such as seat adjusters, seatback recliner, etc., to ensure they operate smoothly and all latches lock securely in every position. Check that the head restraints/headrests move up and down smoothly and the locks (if so equipped) hold securely in all latched positions.

Seat belts: Check that all parts of the seat belt system (for example, buckles, anchors, adjusters and retractors) operate properly and smoothly, and are installed securely. Check the belt webbing for cuts, fraying, wear or damage.

Steering wheel: Check for changes in the steering system, such as excessive free play, hard steering or strange noises.

Warning lights and chimes: Make sure all warning lights and chimes are operating properly.

Windshield defroster: Check that the air comes out of the defroster outlets properly and in sufficient quantity when operating the heater or air conditioner.

Windshield wiper and washer*: Check that the wipers and washer operate properly and that the wipers do not streak.

Under the hood and vehicle

The maintenance items listed here should be checked periodically (for example, each time you check the engine oil or refuel).

Battery*: This vehicle is equipped with a sealed maintenance free battery. It is recommended that you visit a NISSAN dealer for service.

NOTE:

Care should be taken to avoid situations that can lead to potential battery discharge and potential no-start conditions such as:

1. **Installation or extended use of electronic accessories that consume battery power when the engine is not running (Phone chargers, GPS, DVD players, etc.).**
2. **Vehicle is not driven regularly and/or only driven short distances.**

In these cases, the battery may need to be charged to maintain battery health.

Brake and clutch (if so equipped) fluid level*: Make sure that the brake and clutch fluid levels are between the MIN and MAX lines on the reservoir.

Engine coolant level*: Check the coolant level when the engine is cold.

Engine drive belt*: Make sure the drive belt is not frayed, worn, cracked or oily.

Engine oil level*: Check the level after parking the vehicle on a level surface with the engine off. Wait more than 15 minutes for the oil to drain back into the oil pan.

Exhaust system: Make sure there are no loose supports, cracks or holes. If the sound of the exhaust seems unusual or there is a smell of exhaust fumes, immediately have the exhaust system inspected. It is recommended that you visit a NISSAN dealer for this service. For additional information, refer to "Exhaust gas (carbon monoxide)" in the "Starting and driving" section of this manual.

EXPLANATION OF SCHEDULED MAINTENANCE ITEMS

Fluid leaks: Check under the vehicle for fuel, oil, water or other fluid leaks after the vehicle has been parked for a while. Water dripping from the air conditioner after use is normal. If you should notice any leaks or if fuel fumes are evident, check for the cause and have it corrected immediately.

Radiator and hoses: Check the front of the radiator and clean off any dirt, insects, leaves, etc., that may have accumulated. Make sure the hoses have no cracks, deformation, rot or loose connections.

Underbody: The underbody is frequently exposed to corrosive substances such as those used on icy roads or to control dust. It is very important to remove these substances from the underbody, otherwise rust may form on the floor pan, frame, fuel lines and exhaust system. At the end of winter, the underbody should be thoroughly flushed with plain water, in those areas where mud and dirt may have accumulated. For additional information, refer to the "Appearance and care" section of this manual.

Windshield-washer fluid*: Check that there is adequate fluid in the reservoir.

The following descriptions are provided to give you a better understanding of the scheduled maintenance items that should be regularly checked or replaced. The maintenance schedule indicates at which mileage/time intervals each item requires service.

Items marked with **"*"** are recommended by NISSAN for reliable vehicle operation. You are not required to perform maintenance on these items in order to maintain the warranties which come with your NISSAN. Other maintenance items and intervals are required.

When applicable, additional information can be found in the "Do-it-yourself" section of this manual.

NOTE:

NISSAN does not advocate the use of non-OEM approved aftermarket flushing systems and strongly advises against performing these services on a NISSAN product. Many of the aftermarket flushing systems use non-OEM approved chemicals or solvents, the use of which has not been validated by NISSAN.

For recommended fuel, lubricants, fluids, grease, and refrigerant, refer to "Recommended fluids/lubricants and capacities" in the "Technical and consumer information" section of this manual.

EMISSION CONTROL SYSTEM MAINTENANCE:

Drive belt*: Check engine drive belt for wear, fraying or cracking and for proper tension. Replace any damaged drive belts.

Engine air filter: Replace at specified intervals. When driving for prolonged periods in dusty conditions, check/replace the filter more frequently.

Engine coolant*: Replace coolant at the specified interval. When adding or replacing coolant, be sure to use only Genuine NISSAN Long Life Antifreeze/Coolant (blue) or equivalent with the proper mixture. (For additional information on the proper mixture for your area, refer to "Engine cooling system" in the "Do-it-yourself" section of this manual.

NOTE: Mixing any other type of coolant or the use of non-distilled water may reduce the recommended service interval of the coolant.

Engine oil and oil filter: Replace engine oil and oil filter at the specified intervals. For recommended oil grade and viscosity refer to "Recommended fluids/lubricants and capacities" in the "Technical and consumer information" section of this manual.

Engine valve clearance*: Inspect only if valve noise increases. Adjust valve clearance if necessary.

Evaporative emissions control vapor lines*: Check vapor lines for leaks or looseness. Tighten connections or replace parts as necessary.

Fuel filter: Periodic maintenance is not required. (in-tank type filter)

Fuel lines*: Check the fuel hoses, piping and connections for leaks, looseness, or deterioration. Tighten connections or replace parts as necessary.

Spark plugs: Replace at specified intervals. Install new plugs of the type as originally equipped.

CHASSIS AND BODY MAINTENANCE:

Brake lines and cables: Visually inspect for proper installation. Check for chafing, cracks, deterioration, and signs of leaking. Replace any deteriorated or damaged parts immediately.

Brake pads, rotors, drums and linings: Check for wear, deterioration and fluid leaks. Replace any deteriorated or damaged parts immediately.

Exhaust system: Visually inspect the exhaust pipes, muffler and hangers for leaks, cracks, deterioration, and damage. Tighten connections or replace parts as necessary.

Steering gear and linkage, axle and suspension parts, drive shaft boots: Check for damage, looseness, and leakage of oil or grease. Under severe driving conditions, inspect more frequently.

Tire rotation: Tires should be rotated every 5,000 miles (8,000 km) according to the instructions under "General maintenance" in this section. When rotating tires, check for damage and uneven wear. Replace if necessary.

Transmission fluid/oil: Visually inspect for signs of leakage at specified intervals

If towing a trailer, using a camper or car-top carrier, or driving on rough or muddy roads:

- Replace the manual transaxle gear oil every 20,000 miles or 24 months.
- Replace the CVT fluid every 60,000 miles (96,000 km) or request the dealer to inspect the fluid deterioration data using a CONSULT. If the deterioration data is more than 210000, replace the CVT fluid.

To help ensure smooth, safe and economical driving, NISSAN provides two maintenance schedules that may be used, depending upon the conditions in which you usually drive. These schedules contain both distance and time intervals, up to 120,000 miles (192,000 km)/144 months. For most people, the odometer reading will indicate when service is needed. However, if you drive very little, your vehicle should be serviced at the regular time intervals shown in the schedule.

After 120,000 miles (192,000 km)/144 months, continue maintenance at the same mileage/time intervals.

ADDITIONAL MAINTENANCE ITEMS FOR SEVERE OPERATING CONDITIONS

Additional maintenance items for severe operating conditions should be performed on vehicles that are driven under especially demanding conditions. Additional maintenance items should be performed if you primarily operate your vehicle under the following conditions:

- Repeated short trips of less than 5 miles (8 km).
- Repeated short trips of less than 10 miles (16 km) with outside temperatures remaining below freezing.
- Operating in hot weather in stop-and-go "rush hour" traffic.
- Extensive idling and/or low speed driving for long distances, such as police, taxi or door-to-door delivery use.
- Driving in dusty conditions.
- Driving on rough, muddy or salt spread roads.
- Using a car-top carrier.

NOTE:

For vehicles operated in Canada, both standard and severe maintenance items should be performed at every interval.

STANDARD MAINTENANCE

The following tables show the standard maintenance schedule. Depending upon weather and atmospheric conditions, varying road surfaces, individual driving habits and vehicle usage, additional or more frequent maintenance may be required. **After 120,000 miles (192,000 km)/144 months, continue maintenance at the same mileage/time interval.**

EMISSION CONTROL SYSTEM MAINTENANCE

Abbreviations: I = Inspect and correct or replace as necessary, R = Replace

MAINTENANCE OPERATION Perform at number of miles, kilometers or months, whichever comes first.	miles x 1,000 (km x 1,000) Months	MAINTENANCE INTERVAL											
		5 (8) 6	10 (16) 12	15 (24) 18	20 (32) 24	25 (40) 30	30 (48) 36	35 (56) 42	40 (64) 48	45 (72) 54	50 (80) 60	55 (88) 66	60 (96) 72
Drive belt	See NOTE (1)								I*		I*		I*
Air cleaner filter	See NOTE (2)						R						R
Engine oil		R	R	R	R	R	R	R	R	R	R	R	R
Engine oil filter		R	R	R	R	R	R	R	R	R	R	R	R
Engine coolant*	See NOTE (3)(4)												
EVAP vapor lines					I*				I*				I*
Fuel lines					I*				I*				I*
Fuel filter	See NOTE (5)												
Spark plugs (Platinum - tipped type)	See NOTE (6)	Replace every 105,000 miles (168,000 km)											
Intake and exhaust valve clearances*	See NOTE (7)												

Abbreviations: I = Inspect and correct or replace as necessary, R = Replace

MAINTENANCE OPERATION Perform at number of miles, kilometers or months, whichever comes first.	miles x 1,000 (km x 1,000) Months	MAINTENANCE INTERVAL											
		65 (104) 78	70 (112) 84	75 (120) 90	80 (128) 96	85 (136) 102	90 (144) 108	95 (152) 114	100 (160) 120	105 (168) 126	110 (176) 132	115 (184) 138	120 (192) 144
Drive belt	See NOTE (1)		I*		I*		I*		I*		I*		I*
Air cleaner filter	See NOTE (2)						R						R
Engine oil		R	R	R	R	R	R	R	R	R	R	R	R
Engine oil filter		R	R	R	R	R	R	R	R	R	R	R	R
Engine coolant*	See NOTE (3)(4)												
EVAP vapor lines					I*				I*				I*
Fuel lines					I*				I*				I*
Fuel filter	See NOTE (5)												
Spark plugs (Platinum - tipped type)	See NOTE (6)	Replace every 105,000 miles (168,000 km)											
Intake and exhaust valve clearances*	See NOTE (7)												

NOTE:

(1) After 40,000 miles (64,000 km) or 48 months, inspect every 10,000 miles (16,000 km) or 12 months. Replace the drive belt if found damaged.
(2) If operating mainly in dusty conditions, more frequent maintenance may be required.
(3) First replacement interval is 105,000 miles (168,000 km) or 84 months. After first replacement, replace every 75,000 miles (120,000 km) or 60 months.
(4) Use only Genuine NISSAN Long Life Antifreeze/Coolant (blue) or equivalent with proper mixture ratio of 50% antifreeze and 50% demineralized or distilled water. Mixing any other type of coolant or the use of non-distilled water may reduce the life expectancy of the factory fill coolant.
(5) Periodic maintenance is not required.
(6) Replace spark plug when the plug gap exceeds 1.35 mm (0.053 in) even within specified periodic replacement mileage.
(7) Periodic maintenance is not required. However, if valve noise increased, inspect valve clearance.

*** Maintenance items and intervals with "*" are recommended by NISSAN for reliable vehicle operation. The owner need not perform such maintenance in order to maintain the emission warranty or manufacturer recall liability. Other maintenance items and intervals are required.**

CHASSIS & BODY MAINTENANCE

Abbreviations: I = Inspect and correct or replace as necessary, R = Replace,

MAINTENANCE OPERATION Perform at number of miles, kilometers or months, whichever comes first.	miles x 1,000 (km x 1,000) Months	MAINTENANCE INTERVAL											
		5 (8) 6	10 (16) 12	15 (24) 18	20 (32) 24	25 (40) 30	30 (48) 36	35 (56) 42	40 (64) 48	45 (72) 54	50 (80) 60	55 (88) 66	60 (96) 72
Brake lines and cables			I		I		I		I		I		I
Brake pads, rotors, drum and linings ★			I		I		I		I		I		I
Brake fluid ★					R				R				R
CVT fluid	See NOTE (1)		I		I		I		I		I		I
Manual transmission gear oil	See NOTE (2)		I		I		I		I		I		I
Steering gear and linkage, axle and suspension parts ★					I				I				I
Tire rotation	See NOTE (3)												
Front drive shaft boots ★			I		I		I		I		I		I
Exhaust system ★					I				I				I
NISSAN Intelligent Key® battery				I			R			R			R

Abbreviations: I = Inspect and correct or replace as necessary, R = Replace,

MAINTENANCE OPERATION Perform at number of miles, kilometers or months, whichever comes first.	miles x 1,000 (km x 1,000) Months	MAINTENANCE INTERVAL											
		65 (104) 78	70 (112) 84	75 (120) 90	80 (128) 96	85 (136) 102	90 (144) 108	95 (152) 114	100 (160) 120	105 (168) 126	110 (176) 132	115 (184) 138	120 (192) 144
Brake lines and cables			I		I		I		I		I		I
Brake pads, rotors, drum and linings ★			I		I		I		I		I		I
Brake fluid ★					R				R				R
CVT fluid	See NOTE (1)		I		I		I		I		I		I
Manual transmission gear oil	See NOTE (2)		I		I		I		I		I		I
Steering gear and linkage, axle and suspension parts ★					I				I				I
Tire rotation	See NOTE (3)												
Front drive shaft boots ★			I		I		I		I		I		I
Exhaust system ★					I				I				I
NISSAN Intelligent Key® battery				R			R			R			R

NOTE:

Maintenance items with "★" should be performed more frequently according to "Maintenance Under Severe Driving Conditions".
(1) If using a car-top carrier or driving on rough or muddy roads, inspect CVT fluid deterioration every 60,000 miles (96,000 km), then change CVT fluid if necessary. And if the inspection is not performed, change (not just inspect) CVT fluid every 60,000 miles (96,000 km). It is recommended that you visit a NISSAN dealer for this service.
(2) If using a car-top carrier, or driving on rough or muddy roads, change (not just inspect) oil at every 20,000 miles (32,000 km) or 24 months.
(3) For additional information, refer to "General maintenance" in this section.

MAINTENANCE UNDER SEVERE OPERATING CONDITIONS

The maintenance intervals shown on the preceding pages are for normal operating conditions. If the vehicle is mainly operated under severe driving conditions as shown below, more frequent maintenance must be performed on the following items as shown in the table.

SEVERE DRIVING CONDITIONS

- Repeated short trips of less than 5 miles (8 km).
- Repeated short trips of less than 10 miles (16 km) with outside temperatures remaining below freezing.
- Operating in hot weather in stop-and-go "rush hour" traffic.
- Extensive idling and/or low speed driving for long distance, such as police, taxi or door-to-door delivery use.
- Driving in dusty conditions.
- Driving on rough, muddy or salt spread roads.
- Using a car-top carrier.

Maintenance operation: Inspect = Inspect and correct or replace as necessary.

Maintenance item	Maintenance operation	Maintenance interval
Brake fluid	Replace	Every 10,000 miles (16,000 km) or 12 months
Brake pads, rotors, drum and lining	Inspect	Every 5,000 miles (8,000 km) or 6 months
Steering gear & linkage, axle & suspension parts	Inspect	Every 5,000 miles (8,000 km) or 6 months
Front drive shaft boots	Inspect	Every 5,000 miles (8,000 km) or 6 months
Exhaust system	Inspect	Every 5,000 miles (8,000 km) or 6 months

MAINTENANCE LOG

5,000 Miles (8,000 km) or 6 Months Dealer Name: Date: Mileage: Dealer Stamp:	**10,000 Miles (16,000 km) or 12 Months** Dealer Name: Date: Mileage: Dealer Stamp:	**15,000 Miles (24,000 km) or 18 Months** Dealer Name: Date: Mileage: Dealer Stamp:
20,000 Miles (32,000 km) or 24 Months Dealer Name: Date: Mileage: Dealer Stamp:	**25,000 Miles (40,000 km) or 30 Months** Dealer Name: Date: Mileage: Dealer Stamp:	**30,000 Miles (48,000 km) or 36 Months** Dealer Name: Date: Mileage: Dealer Stamp:
35,000 Miles (56,000 km) or 42 Months Dealer Name: Date: Mileage: Dealer Stamp:	**40,000 Miles (64,000 km) or 48 Months** Dealer Name: Date: Mileage: Dealer Stamp:	**45,000 Miles (72,000 km) or 54 Months** Dealer Name: Date: Mileage: Dealer Stamp:

50,000 Miles (80,000 km) or 60 Months Dealer Name: Date: Mileage: Dealer Stamp:	**55,000 Miles (88,000 km) or 66 Months** Dealer Name: Date: Mileage: Dealer Stamp:	**60,000 Miles (96,000 km) or 72 Months** Dealer Name: Date: Mileage: Dealer Stamp:
65,000 Miles (104,000 km) or 78 Months Dealer Name: Date: Mileage: Dealer Stamp:	**70,000 Miles (112,000 km) or 84 Months** Dealer Name: Date: Mileage: Dealer Stamp:	**75,000 Miles (120,000 km) or 90 Months** Dealer Name: Date: Mileage: Dealer Stamp:
80,000 Miles (128,000 km) or 96 Months Dealer Name: Date: Mileage: Dealer Stamp:	**85,000 Miles (136,000 km) or 102 Months** Dealer Name: Date: Mileage: Dealer Stamp:	**90,000 Miles (144,000 km) or 108 Months** Dealer Name: Date: Mileage: Dealer Stamp:

95,000 Miles (152,000 km) or 114 Months Dealer Name: Date: Mileage: Dealer Stamp:	**100,000 Miles (160,000 km) or 120 Months** Dealer Name: Date: Mileage: Dealer Stamp:	**105,000 Miles (168,000 km) or 126 Months** Dealer Name: Date: Mileage: Dealer Stamp:
110,000 Miles (176,000 km) or 132 Months Dealer Name: Date: Mileage: Dealer Stamp:	**115,000 Miles (184,000 km) or 138 Months** Dealer Name: Date: Mileage: Dealer Stamp:	**120,000 Miles (192,000 km) or 144 Months** Dealer Name: Date: Mileage: Dealer Stamp:

MEMO

10 Technical and consumer information

Recommended fluids/lubricants and capacities . . . 10-2
- Fuel recommendation . . . 10-4
- Engine oil and oil filter recommendations . . . 10-6
- Air conditioner system refrigerant and oil recommendations . . . 10-7

Specifications . . . 10-8
- Engine . . . 10-8
- Wheels and tires . . . 10-9
- Dimensions and weights . . . 10-9

When traveling or registering in another country . . . 10-10

Vehicle identification . . . 10-10
- Vehicle Identification Number (VIN) plate . . . 10-10
- Vehicle identification number (chassis number) . . . 10-10
- Engine serial number . . . 10-11
- F.M.V.S.S./C.M.V.S.S. certification label . . . 10-11
- Emission control information label . . . 10-11
- Tire and Loading Information label . . . 10-12
- Air conditioner specification label . . . 10-12

Installing front license plate . . . 10-13

Vehicle loading information . . . 10-13
- Terms . . . 10-13
- Determining vehicle load capacity . . . 10-14
- Loading tips . . . 10-16
- Measurement of weights . . . 10-16

Towing a trailer . . . 10-17
- Flat towing . . . 10-17

Uniform tire quality grading . . . 10-17

Emission control system warranty . . . 10-18

Reporting safety defects . . . 10-19

Readiness for Inspection/Maintenance (I/M) test . . . 10-20

Event Data Recorders (EDR) . . . 10-20

Owner's Manual/Service Manual order information . . . 10-21

RECOMMENDED FLUIDS/ LUBRICANTS AND CAPACITIES

The following are approximate capacities. The actual refill capacities may be a little different. When refilling, follow the procedure described in the "Do-it-yourself" section to determine the proper refill capacity.

Fluid type		Capacity (approximate)			Recommended Fluids/Lubricants
		Metric Measure	US Measure	Imperial Measure	
Fuel		41 L	10-7/8 gal	9 gal	• For additional information, refer to "Fuel recommendation" in this section.
Engine oil*1 Drain and refill *1: For additional information, refer to "Engine oil" in the "Do-it-yourself" section of this manual	With oil filter change	3.5 L	3-3/4 qt	3-1/8 qt	• Genuine "Nissan Motor Oil 0W-20 SN" (or equivalent) is recommended. • If the above motor oil is not available, a synthetic 0W-20 GF-5 SN motor oil may be used. Damage caused by the use of engine oil other than as recommended is not covered under NISSAN's New Vehicle Limited Warranty. For additional information, refer to "Engine oil and oil filter recommendations" in this section.
	Without oil filter change	3.2 L	3-3/8 qt	2-7/8 qt	
Engine coolant with reservoir	With manual transmission	6.7 L	1-3/4 gal	1-1/2 gal	• Pre-diluted Genuine NISSAN Long Life Antifreeze/Coolant (blue) or equivalent
	With Continuously Variable Transmission (CVT)	7.2 L	1-7/8 gal	1-5/8 gal	• Pre-diluted Genuine NISSAN Long Life Antifreeze/Coolant (blue) or equivalent
Manual transmission gear oil		—	—	—	• Genuine NISSAN Manual Transmission Fluid (MTF) HQ Multi 75W-85, or equivalent. • If Genuine NISSAN Manual Transmission Fluid HQ-Multi is not available, API GL-4, Viscosity SAE 75W-85 may be used as a temporary replacement. However, use Genuine NISSAN Manual Transmission Fluid HQ-Multi (or equivalent) as soon as it is available.

Fluid type	Capacity (approximate)			Recommended Fluids/Lubricants
	Metric Measure	US Measure	Imperial Measure	
Continuously Variable Transmission (CVT) fluid	—	—	—	• Genuine NISSAN CVT Fluid NS-3 • NISSAN recommends using Genuine NISSAN CVT Fluid NS-3 (or equivalent) ONLY in NISSAN CVTs. Do not mix with other fluids. Using fluids that are not equivalent to Genuine NISSAN CVT Fluid NS-3 may damage the CVT. Damage caused by the use of fluids other than as recommended is not covered under NISSAN's New Vehicle Limited Warranty.
Brake and clutch (if so equipped) fluid	—	—	—	• Genuine NISSAN Super Heavy Duty Brake Fluid, available in mainland U.S.A. through a NISSAN dealer, or equivalent DOT 3.
Multi-purpose grease	—	—	—	• NLGI No. 2 (Lithium soap base or equivalent)
Air conditioning system refrigerant	—	—	—	• HFC-134a (R-134a) • For additional information, refer to "Air conditioner system refrigerant and oil recommendations" in this section.
Air conditioning system oil	—	—	—	• Genuine NISSAN A/C System Oil Type R (KHLOO-PAGRO) or equivalent • For additional information, refer to "Air conditioner system refrigerant and oil recommendations" in this section.
Windshield-washer fluid	3.5 L	7/8 gal	3/4 gal	• Genuine NISSAN Windshield Washer Concentrate Cleaner & Antifreeze or equivalent

FUEL RECOMMENDATION

Use unleaded regular gasoline with an octane rating of at least 87 AKI (Anti-Knock Index) number (Research octane number 91).

⚠ CAUTION

- **Only vehicles with the E-85 filler door label can operate on E-85. Fuel system or other damage can occur if E-85 is used in vehicles that are not designed to run on E-85.**
- **Using a fuel other than that specified could adversely affect the emission control system, and may also affect the warranty coverage.**
- **Under no circumstances should a leaded gasoline be used, because this will damage the three-way catalyst.**
- **Do not use a fuel containing more than 15% ethanol in your vehicle. Your vehicle is not designed to run on a fuel containing more than 15% ethanol. Using a fuel containing more than 15% ethanol in a vehicle not specifically designed for a fuel containing more than 15% ethanol can adversely affect the emission control devices and systems of the vehicle. Damage caused by such fuel is not covered by the NISSAN New Vehicle Limited Warranty.**
- **Do not use fuel that contains the octane booster methylcyclopentadienyl manganese tricarbonyl (MMT). Using fuel containing MMT may adversely affect vehicle performance and vehicle emissions. Not all fuel dispensers are labeled to indicate MMT content, so you may have to consult your gasoline retailer for more details. Note that Federal and California laws prohibit the use of MMT in reformulated gasoline.**
- **U.S. government regulations require ethanol dispensing pumps to be identified by a small, square, orange and black label with the common abbreviation or the appropriate percentage for that region.**

Gasoline specifications

NISSAN recommends using gasoline that meets the World-Wide Fuel Charter (WWFC) specifications where it is available. Many of the automobile manufacturers developed this specification to improve emission control system and vehicle performance. Ask your service station manager if the gasoline meets the WWFC specifications.

Reformulated gasoline

Some fuel suppliers are now producing reformulated gasolines. These gasolines are specially designed to reduce vehicle emissions. NISSAN supports efforts towards cleaner air and suggests that you use reformulated gasoline when available.

Gasoline containing oxygenates

Some fuel suppliers sell gasoline containing oxygenates such as ethanol, Methyl Tert-butyl Ether (MTBE) and methanol with or without advertising their presence. NISSAN does not recommend the use of fuels of which the oxygenate content and the fuel compatibility for your NISSAN cannot be readily determined. If in doubt, ask your service station manager.

If you use oxygenate-blend gasoline, please take the following precautions as the usage of such fuels may cause vehicle performance problems and/or fuel system damage.

- **The fuel should be unleaded and have an octane rating no lower than that recommended for unleaded gasoline.**
- **If an oxygenate-blend other than methanol blend is used, it should contain no more than 15% oxygenate.**
- **If a methanol blend is used, it should contain no more than 5% methanol (methyl alcohol, wood alcohol). It should also contain a suitable amount of appropriate cosolvents and corrosion inhibitors. If not properly formulated with appropriate cosolvents and corrosion inhibitors, such methanol blends may cause fuel system damage and/or vehicle performance problems. At this time, sufficient data is not available to ensure that all methanol blends are suitable for use in NISSAN vehicles.**

If any driveability problems such as engine stalling and difficult hot-starting are experienced after using oxygenate-blend fuels, immediately change to a non-oxygenate fuel or a fuel with a low blend of MTBE.

Take care not to spill gasoline during refueling. Gasoline containing oxygenates can cause paint damage.

E–15 fuel

E-15 fuel is a mixture of approximately 15% fuel ethanol and 85% unleaded gasoline. E-15 can only be used in vehicles designed to run on E-15 fuel. U.S. government regulations require fuel ethanol dispensing pumps to be identified with small, square, orange and black label with the common abbreviation or the appropriate percentage for that region.

E–85 fuel

E-85 fuel is a mixture of approximately 85% fuel ethanol and 15% unleaded gasoline. E-85 can only be used in a Flexible Fuel Vehicle (FFV). Do not use E-85 in your vehicle. U.S. government regulations require fuel ethanol dispensing pumps to be identified by a small, square, orange and black label with the common abbreviation or the appropriate percentage for that region.

Fuel containing MMT

MMT, or methylcyclopentadienyl manganese tricarbonyl, is an octane boosting additive. NISSAN does not recommend the use of fuel containing MMT. Such fuel may adversely affect vehicle performance, including the emissions control system. Note that while some fuel pumps label MMT content, not all do, so you may have to consult your gasoline retailer for more details.

Aftermarket fuel additives

NISSAN does not recommend the use of any aftermarket fuel additives (for example, fuel injector cleaner, octane booster, intake valve deposit removers, etc.) which are sold commercially. Many of these additives intended for gum, varnish or deposit removal may contain active solvents or similar ingredients that can be harmful to the fuel system and engine.

Octane rating tips

Using unleaded gasoline with an octane rating lower than recommended can cause persistent, heavy "spark knock." ("Spark knock" is a metallic rapping noise.) If severe, this can lead to engine damage. If you detect a persistent heavy spark knock even when using gasoline of the stated octane rating, or if you hear steady spark knock while holding a steady speed on level roads, it is recommended that you have a NISSAN dealer correct the condition. Failure to correct the condition is misuse of the vehicle, for which NISSAN is not responsible.

Incorrect ignition timing may result in spark knock, after-run and/or overheating, which may cause excessive fuel consumption or engine damage. If any of the above symptoms are encountered, have your vehicle checked. It is recommended that you visit a NISSAN dealer for servicing.

However, now and then you may notice light spark knock for a short time while accelerating or driving up hills. This is not a cause for concern, because you get the greatest fuel benefit when there is light spark knock for a short time under heavy engine load.

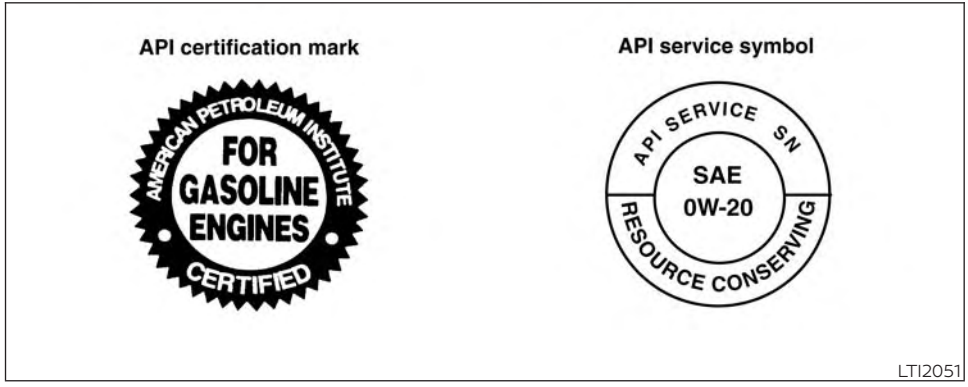

ENGINE OIL AND OIL FILTER RECOMMENDATIONS

Selecting the correct oil

It is essential to choose the correct grade, quality and viscosity engine oil to ensure satisfactory engine life and performance. For additional information, refer to "Recommended fluids/lubricants and capacities" in this section. NISSAN recommends the use of an energy conserving oil in order to improve fuel economy.

Select only engine oils that meet the American Petroleum Institute (API) certification or International Lubricant Standardization and Approval Committee (ILSAC) certification and SAE viscosity standard. These oils have the API certification mark on the front of the container. Oils which do not have the specified quality label should not be used as they could cause engine damage.

Oil additives

NISSAN does not recommend the use of oil additives. The use of an oil additive is not necessary when the proper oil type is used and maintenance intervals are followed.

Oil which may contain foreign matter or has been previously used should not be used.

Oil viscosity

The engine oil viscosity or thickness changes with temperature. Because of this, it is important to select the engine oil viscosity based on the temperatures at which the vehicle will be operated before the next oil change. Choosing an oil viscosity other than that recommended could cause serious engine damage.

Selecting the correct oil filter

Your new NISSAN vehicle is equipped with a high-quality Genuine NISSAN oil filter. When replacing, use a Genuine NISSAN oil filter or its equivalent for the reason described in "Change intervals."

Change intervals

The oil and oil filter change intervals for your engine are based on the use of the specified quality oils and filters. Using engine oil and filters that are not of the specified quality, or exceeding recommended oil and filter change intervals could reduce engine life. Damage to the engine caused by improper maintenance or use of incorrect oil and filter quality and/or viscosity is not covered by the NISSAN New Vehicle Limited Warranty.

Your engine was filled with a high-quality engine oil when it was built. You do not have to change the oil before the first recommended change interval. Oil and filter change intervals depend upon how you use your vehicle.

Operation under the following conditions may require more frequent oil and filter changes:

- repeated short distance driving at cold outside temperatures
- driving in dusty conditions
- extensive idling
- stop and go commuting

For additional information, refer to the "Maintenance and schedules" section of this manual.

AIR CONDITIONER SYSTEM REFRIGERANT AND OIL RECOMMENDATIONS

The air conditioner system in your NISSAN vehicle must be charged with the refrigerant HFC-134a (R-134a) and NISSAN A/C system oil Type R (KLH00-PAGRO) or the exact equivalents.

⚠ CAUTION

The use of any other refrigerant or oil will cause severe damage to the air conditioning system and will require the replacement of all air conditioner system components.

The refrigerant HFC-134a (R-134a) in your NISSAN vehicle does not harm the earth's ozone layer. Although this refrigerant does not affect the earth's atmosphere, certain government regulations require the recovery and recycling of any refrigerant during automotive air conditioner system service. A NISSAN dealer has the trained technicians and equipment needed to recover and recycle your air conditioner system refrigerant.

It is recommended that you visit a NISSAN dealer when servicing your air conditioner system.

ENGINE

Model		HR16DE
Type		Gasoline, 4-cycle, DOHC
Cylinder arrangement		4-cylinder, inline
Bore x Stroke	in (mm)	3.071 x 3.291 (78.0 x 83.6)
Displacement	cu in (cm^3)	97.51 (1,598)
Firing order		1–3–4–2
Idle speed		
M/T		
CVT in N (Neutral) position		No adjustment is necessary.
Ignition timing (degree B.T.D.C. at idle speed)		
CO % at idle		
Spark plug		PLZKAR6A-11
Spark plug gap (Nominal)	in (mm)	0.043 (1.1)
Camshaft operation		Timing chain

This spark ignition system complies with the Canadian standard ICES-002.

WHEELS AND TIRES

Wheel type	Size	Offset in (mm)
Aluminum and steel	15 x 5.5J	1.57 (40)
Aluminum	16 x 6.0J	1.77 (45)
Tire size	P185/65R15 P195/55R16	
Spare tire	T125/70D15	

DIMENSIONS AND WEIGHTS

		Unit: in (mm)
Overall length		163.4 (4,151)
Overall width		66.7 (1,695)
Overall height		
USA		
15 inch wheel		60.5 (1,537)
16 inch wheel		60.5 (1,536)
CAN		
15 inch wheel		60.6 (1,538)
16 inch wheel		60.5 (1,537)
Front Track width		
15 inch wheel		58.3 (1,480)
16 inch wheel		57.9 (1,470)
Rear Track width		
15 inch wheel		58.5 (1,485)
16 inch wheel		58.1 (1,475)
Wheelbase		102.4 (2,600)
Gross vehicle weight rating	lbs. (kg)	Refer to the "F.M.V.S.S./C.M.V.S.S. certification label" on the center pillar between the driver's side front and rear doors.
Gross axle weight rating		
Front	lbs. (kg)	
Rear	lbs. (kg)	

WHEN TRAVELING OR REGISTERING IN ANOTHER COUNTRY

When planning to drive your NISSAN vehicle in another country, you should first find out if the fuel available is suitable for your vehicle's engine.

Using fuel with an octane rating that is too low may cause engine damage. All gasoline vehicles must be operated with unleaded gasoline. Therefore, avoid taking your vehicle to areas where appropriate fuel is not available.

When transferring the registration of your vehicle to another country, state, province or district, it may be necessary to modify the vehicle to meet local laws and regulations.

The laws and regulations for motor vehicle emission control and safety standards vary according to the country, state, province or district; therefore, vehicle specifications may differ.

When any vehicle is to be taken into another country, state, province or district and registered, its modifications, transportation and registration are the responsibility of the user. NISSAN is not responsible for any inconvenience that may result.

VEHICLE IDENTIFICATION

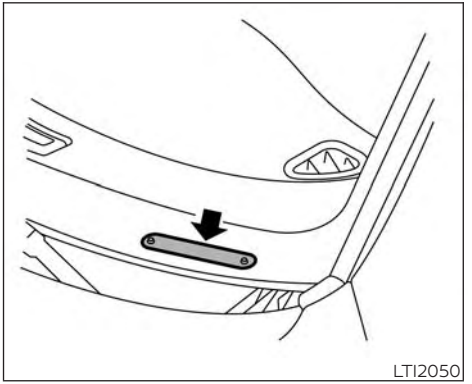

VEHICLE IDENTIFICATION NUMBER (VIN) PLATE

The Vehicle Identification Number (VIN) plate is attached as shown. This number is the identification for your vehicle and is used in the vehicle registration.

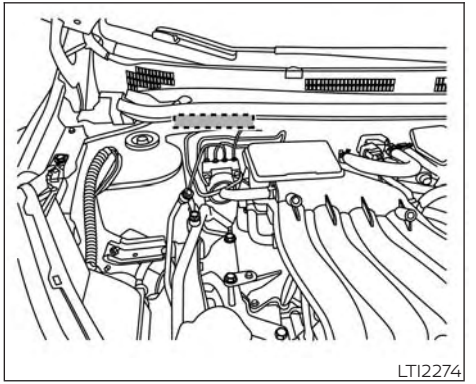

VEHICLE IDENTIFICATION NUMBER (chassis number)

The vehicle identification number is located as shown.

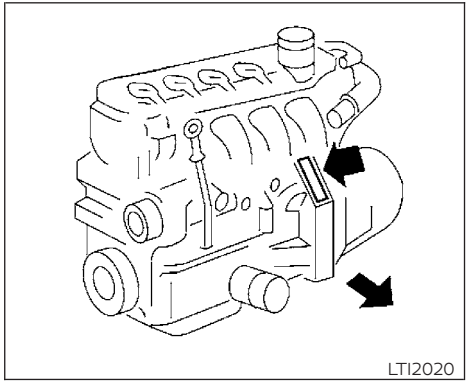

HR16DE engine

ENGINE SERIAL NUMBER

The number is stamped on the engine as shown.

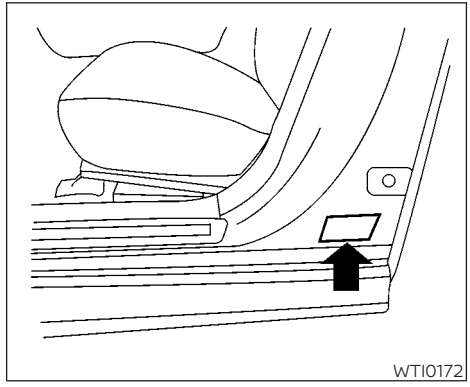

F.M.V.S.S./C.M.V.S.S. CERTIFICATION LABEL

The Federal/Canadian Motor Vehicle Safety Standard (F.M.V.S.S./C.M.V.S.S.) certification label is affixed as shown. This label contains valuable vehicle information, such as: (GVWR), (GAWR), month and year of manufacture, (VIN), etc. Review it carefully.

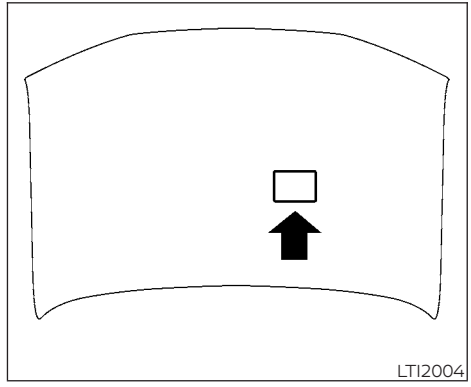

EMISSION CONTROL INFORMATION LABEL

The emission control information label is attached to the underside of the hood as shown.

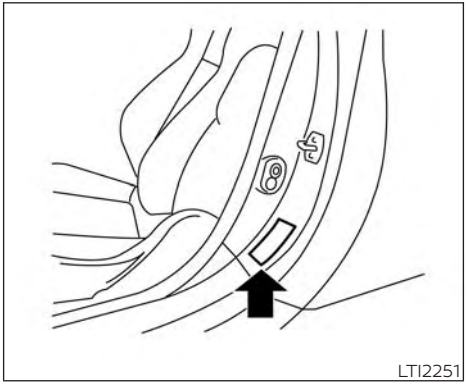

TIRE AND LOADING INFORMATION LABEL

The cold tire pressure is shown on the Tire and Loading Information label. The label is located as shown.

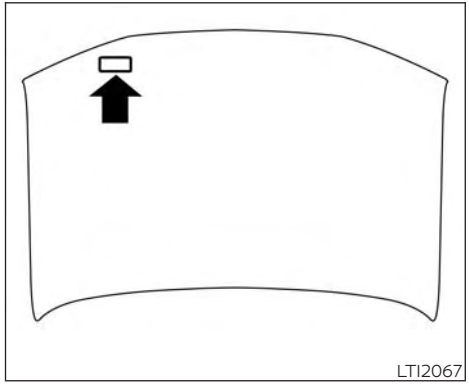

AIR CONDITIONER SPECIFICATION LABEL

The air conditioner specification label is affixed as shown.

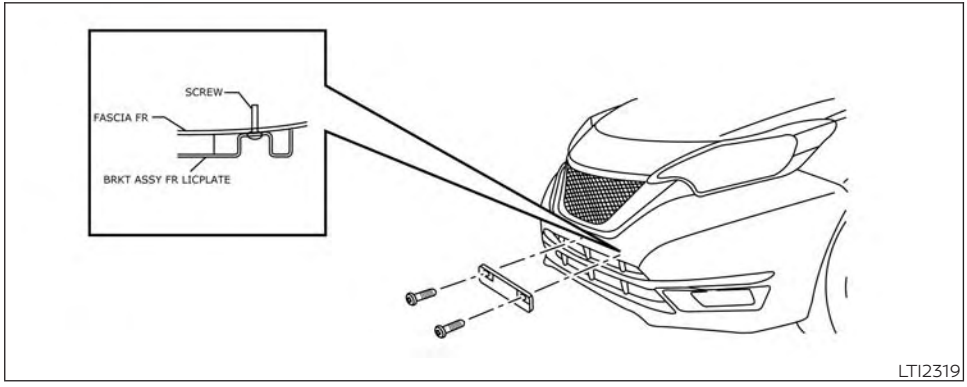

Before mounting the license plate, confirm the following parts are enclosed in the plastic bag:

- License plate bracket
- License plate bracket screws x2

Use the following steps to mount the front license plate:

1. Hold the license plate bracket and mount the license plate bracket using the two screws to the fascia.

⚠ WARNING

- **It is extremely dangerous to ride in a cargo area inside a vehicle. In a collision, people riding in these areas are more likely to be seriously injured or killed.**
- **Do not allow people to ride in any area of your vehicle that is not equipped with seats and seat belts.**
- **Be sure everyone in your vehicle is in a seat and using a seat belt properly.**

TERMS

It is important to familiarize yourself with the following terms before loading your vehicle:

- Curb Weight (actual weight of your vehicle) - vehicle weight including: standard and optional equipment, fluids, emergency tools, and spare tire assembly. This weight **does not** include passengers and cargo.

- GVW (Gross Vehicle Weight) - curb weight plus the combined weight of passengers and cargo.
- GVWR (Gross Vehicle Weight Rating) - maximum total combined weight of the unloaded vehicle, passengers, luggage, hitch, trailer tongue load and any other optional equipment. This information is located on the F.M.V.S.S./C.M.V.S.S. certification label.
- GAWR (Gross Axle Weight Rating) - maximum weight (load) limit specified for the front or rear axle. This information is located on the F.M.V.S.S./C.M.V.S.S. certification label.
- GCWR (Gross Combined Weight rating) - The maximum total weight rating of the vehicle, passengers, cargo, and trailer.
- Vehicle Capacity Weight, Load limit, Total load capacity - maximum total weight limit specified of the load (passengers and cargo) for the vehicle. This is the maximum combined weight of occupants and cargo that can be loaded into the vehicle. If the vehicle is used to tow a trailer, the trailer tongue weight must be included as part of the cargo load. This information is located on the Tire and Loading Information label.
- Cargo capacity - permissible weight of cargo, the subtracted weight of occupants from the load limit.

DETERMINING VEHICLE LOAD CAPACITY

The load capacity of this vehicle is determined by weight, not by available cargo space. For example, a luggage rack, bike carrier, car-top carrier or similar equipment does not increase load carrying capacity of your vehicle.

To determine vehicle load capacity:

Vehicle weight can be determined by using a commercial-grade scale, found at places such as a truck stop, gravel quarry, grain elevator, or a scrap metal recycling facility.

1. Determine the curb weight of your vehicle.
2. Compare the curb weight amount to the GVWR specified for your vehicle to determine how much more weight your vehicle can carry.
3. After loading (cargo and passengers), re-weigh your vehicle to determine if either GVWR or GAWR for your vehicle is exceeded. If GVWR is exceeded, remove cargo as necessary. If either the front or rear GAWR is exceeded, shift the load or remove cargo as necessary.

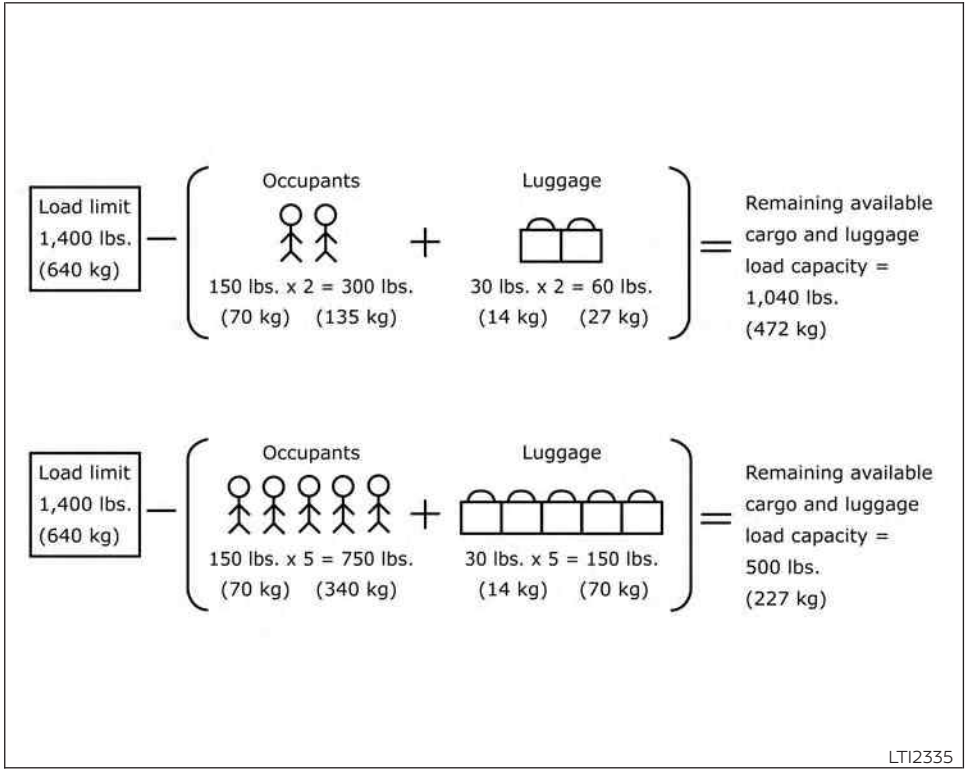

Example

Steps for determining correct load limit

1. Locate the statement "The combined weight of occupants and cargo should never exceed XXX lbs. or XXX kg" on your vehicle's Tire and Loading Information label.
2. Determine the combined weight of the driver and passengers that will be riding in your vehicle.
3. Subtract the combined weight of the driver and passengers from XXX lbs. or XXX kg.
4. The resulting figure equals the available amount of cargo and luggage load capacity. For example, if the XXX amount equals 1,400 lbs. and there will be five 150 lbs. passengers in your vehicle, the amount of available cargo and luggage load capacity is 650 lbs. (1,400-750 (5 X 150) = 650 lbs.) or (640-340 (5 X 70) = 300 kg.)

5. Determine the combined weight of luggage and cargo being loaded on the vehicle. That weight may not safely exceed the available cargo and luggage load capacity calculated in step 4.

Before driving a loaded vehicle, confirm that you do not exceed the Gross Vehicle Weight Rating (GVWR) or the Gross Axle Weight Rating (GAWR) for your vehicle. For additional information, refer to "Measurement of weights" in this section.

Also check tires for proper inflation pressures. For additional information, refer to "Tire and Loading Information label" in this section.

LOADING TIPS

- The GVW must not exceed GVWR or GAWR as specified on the F.M.V.S.S./C.M.V.S.S. certification label.
- Do not load the front and rear axle to the GAWR. Doing so will exceed the GVWR.

⚠WARNING

- **Properly secure all cargo with ropes or straps to help prevent it from sliding or shifting. Do not place cargo higher than the seatbacks. In a sudden stop or collision, unsecured cargo could cause personal injury.**
- **Do not load your vehicle any heavier than the GVWR or the maximum front and rear GAWRs. If you do, parts of your vehicle can break, tire damage could occur, or it can change the way your vehicle handles. This could result in loss of control and cause personal injury.**
- **Overloading not only can shorten the life of your vehicle and the tire, but can also cause unsafe vehicle handling and longer braking distances. This may cause a premature tire failure which could result in a serious accident and personal injury. Failures caused by overloading are not covered by the vehicle's warranty.**

MEASUREMENT OF WEIGHTS

Secure loose items to prevent weight shifts that could affect the balance of your vehicle. When the vehicle is loaded, drive to a scale and weigh the front and the rear wheels separately to determine axle loads. Individual axle loads should not exceed either of the gross axle weight ratings (GAWR). The total of the axle loads should not exceed the gross vehicle weight rating (GVWR). These ratings are given on the vehicle certification label. If weight ratings are exceeded, move or remove items to bring all weights below the ratings.

Do not tow a trailer with your vehicle.

FLAT TOWING

Towing your vehicle with all four wheels on the ground is sometimes called flat towing. This method is sometimes used when towing a vehicle behind a recreational vehicle, such as a motor home.

⚠ CAUTION

- **Failure to follow these guidelines can result in severe transmission damage.**
- **Whenever flat towing your vehicle, always tow forward, never backward.**
- **Never tow your front wheel drive vehicle with the front tires on the ground. Doing so may cause serious and expensive damage to the powertrain.**
- **DO NOT tow any continuously variable transmission vehicle with all four wheels on the ground (flat towing). Doing so WILL DAMAGE internal transmission parts due to lack of transmission lubrication.**
- **For emergency towing procedures refer to "Towing recommended by NISSAN" in the "In case of emergency" section of this manual.**

Manual Transmission (if so equipped)

- Always tow with the manual transmission in N (Neutral).
- After towing 500 miles (805 km), start and idle the engine with the transmission in N (Neutral) for two minutes. Failure to idle the engine after every 500 miles (805 km) of towing may cause damage to internal transmission parts.

Continuously Variable Transmission (if so equipped)

To tow a vehicle equipped with a continuously variable transmission, an appropriate vehicle dolly **MUST** be placed under the towed vehicle's drive wheels. **Always** follow the dolly manufacturer's recommendations when using their product.

DOT (Department of Transportation) Quality Grades: All passenger car tires must conform to federal safety requirements in addition to these grades.

Quality grades can be found where applicable on the tire sidewall between tread shoulder and maximum section width. For example:

Treadwear 200 Traction AA Temperature A

Treadwear

The treadwear grade is a comparative rating based on the wear rate of the tire when tested under controlled conditions on a specified government test course. For example, a tire graded 150 would wear one and one-half (1 1/2) times as well on the government course as a tire graded 100. The relative performance of tires depends upon the actual conditions of their use, however, and may depart significantly from the norm due to variations in driving habits, service practices and differences in road characteristics and climate.

Traction AA, A, B and C

The traction grades, from highest to lowest, are AA, A, B, and C. Those grades represent the tire's ability to stop on wet pavement as measured under controlled conditions on specified government test surfaces of asphalt and concrete. A tire marked C may have poor traction performance.

⚠ WARNING

The traction grade assigned to this tire is based on straight-ahead braking traction tests, and does not include acceleration, cornering, hydroplaning, or peak traction characteristics.

Temperature A, B and C

The temperature grades are A (the highest), B, and C, representing the tire's resistance to the generation of heat, and its ability to dissipate heat when tested under controlled conditions on a specified indoor laboratory test wheel. Sustained high temperature can cause the material of the tire to degenerate and reduce tire life, and excessive temperature can lead to sudden tire failure. The grade C corresponds to a level of performance which all passenger car tires must meet under the Federal Motor Safety Standard No. 109. Grades B and A represent higher levels of performance on the laboratory test wheel than the minimum required by law.

⚠ WARNING

The temperature grade for this tire is established for a tire that is properly inflated and not overloaded. Excessive speed, under-inflation, or excessive loading, either separately or in combination, can cause heat build-up and possible tire failure.

EMISSION CONTROL SYSTEM WARRANTY

Your NISSAN vehicle is covered by the following emission warranties:

For USA

1. Emission Defects Warranty
2. Emissions Performance Warranty

Details of this warranty may be found with other vehicle warranties in your Warranty Information Booklet which comes with your NISSAN vehicle. If you did not receive a Warranty Information Booklet, or it is lost, you may obtain a replacement by writing to:

- Nissan North America, Inc.
  Consumer Affairs Department
  P.O. Box 685003
  Franklin, TN 37068-5003

For Canada

Emission Control System Warranty

Details of this warranty may be found with other vehicle warranties in your Warranty Information Booklet which comes with your NISSAN vehicle. If you did not receive a Warranty Information Booklet, or it is lost, you may obtain a replacement by writing to:

- Nissan Canada Inc.
  5290 Orbitor Drive
  Mississauga, Ontario, L4W 4Z5

For USA

If you believe that your vehicle has a defect which could cause a crash or could cause injury or death, you should immediately inform the National Highway Traffic Safety Administration (NHTSA) in addition to notifying NISSAN.

If NHTSA receives similar complaints, it may open an investigation, and if it finds that a safety defect exists in a group of vehicles, it may order a recall and remedy campaign. However, NHTSA cannot become involved in individual problems between you, your dealer, or NISSAN.

To contact NHTSA, you may call the Vehicle Safety Hotline toll-free at 1-888-327-4236 (TTY: 1-800-424-9153); go to http://www.safercar.gov; or write to: Administrator, NHTSA, 400 Seventh Street, SW., Washington, D.C. 20590. You can also obtain other information about motor vehicle safety from http://www.safercar.gov.

You may notify NISSAN by contacting our Consumer Affairs Department, toll-free, at 1-800-NISSAN-1.

For Canada

If you believe that your vehicle has a defect which could cause a crash or could cause injury or death, you should immediately inform Transport Canada in addition to notifying NISSAN.

If Transport Canada receives complaints, it may open an investigation, and if it finds that a safety defect exists in a group of vehicles, it may request that NISSAN conduct a recall campaign. However, Transport Canada cannot become involved in individual problems between you, your dealer, or NISSAN.

You may contact Transport Canada's Defect Investigations and Recalls Division toll free at 1-800-333-0510. You may also report safety defects online at: https://wwwapps.tc.gc.ca/Saf-Sec-Sur/7/PCDB-BDPP/fc-cp.aspx?lang=eng (English speakers) or https://wwwapps.tc.gc.ca/Saf-Sec-Sur/7/PCDB-BDPP/fc-cp.aspx?lang=fra (French speakers)

Additional information concerning motor vehicle safety may be obtained from Transport Canada's Road Safety Information Centre at 1-800-333-0371 or online at www.tc.gc.ca/roadsafety (English speakers) or www.tc.gc.ca/securiteroutiere (French speakers).

To notify NISSAN of any safety concerns please contact our Consumer Information Centre toll free at 1-800-387-0122.

READINESS FOR INSPECTION/ MAINTENANCE (I/M) TEST

Due to legal requirements in some states and Canadian Provinces, your vehicle may be required to be in what is called the "ready condition" for an Inspection/Maintenance (I/M) test of the emission control system.

The vehicle is set to the "ready condition" when it is driven through certain driving patterns. Usually, the ready condition can be obtained by ordinary usage of the vehicle.

If a powertrain system component is repaired or the battery is disconnected, the vehicle may be reset to a "not ready" condition. Before taking the I/M test, check the vehicle's inspection/maintenance test readiness condition. Place the ignition switch in the ON position without starting the engine. If the Malfunction Indicator Light (MIL) comes on steady for 20 seconds and then blinks for 10 seconds, the I/M test condition is "not ready". If the MIL does not blink after 20 seconds, the I/M test condition is "ready". It is recommended that you visit a NISSAN dealer to set the "ready condition" or to prepare the vehicle for testing.

EVENT DATA RECORDERS (EDR)

This vehicle is equipped with an Event Data Recorder (EDR). The main purpose of an EDR is to record, in certain crash or near crash-like situations, such as an air bag deployment or hitting a road obstacle, data that will assist in understanding how a vehicle's systems performed. The EDR is designed to record data related to vehicle dynamics and safety systems for a short period of time, typically 30 seconds or less. The EDR in this vehicle is designed to record such data as:

- How various systems in your vehicle were operating;
- Whether or not the driver and passenger safety belts were buckled/fastened;
- How far (if at all) the driver was depressing the accelerator and/or brake pedal; and,
- How fast the vehicle was traveling.
- Sounds are not recorded.

These data can help provide a better understanding of the circumstances in which crashes and injuries occur. NOTE: EDR data are recorded by your vehicle only if a non-trivial crash situation occurs; no data are recorded by the EDR under normal driving conditions and no personal data (e.g. name, gender, age and crash location) are recorded. However, other parties, such as law enforcement, could combine the EDR data with the type of personally identifying data routinely acquired during a crash investigation.

To read data recorded by an EDR, special equipment is required and access to the vehicle or the EDR is needed. In addition to the vehicle manufacturer and NISSAN dealer, other parties, such as law enforcement, that have the special equipment, can read the information if they have access to the vehicle or the EDR. EDR data will only be accessed with the consent of the vehicle owner or lessee or as otherwise required or permitted by law.

OWNER'S MANUAL/SERVICE MANUAL ORDER INFORMATION

Genuine NISSAN Service Manuals for this model year and prior can be purchased. A Genuine NISSAN Service Manual is the best source of service and repair information for your vehicle. This manual is the same one used by the factory-trained technicians working at NISSAN dealerships. Genuine NISSAN Owner's Manuals can also be purchased.

For USA

For current pricing and availability of Genuine **NISSAN Service Manuals,** contact:

www.nissan-techinfo.com

For current pricing and availability of Genuine **NISSAN Owner's Manuals,** contact:

1-800-247-5321

For Canada

To purchase a copy of a Genuine NISSAN Service Manual or Owner's Manual, for this model year and prior, please contact your nearest NISSAN dealer. For the phone number and location of a NISSAN dealer in your area, call the NISSAN Information Center at 1-800-387-0122 and a bilingual NISSAN representative will assist you.

MEMO

11 Index

A

Air bag (See supplemental restraint system) . . . 1-44
Air bag system
  Front (See supplemental front impact air bag system) . . . 1-55
Air bag warning labels . . . 1-63
Air bag warning light . . . 1-63, 2-20
Air bag warning light, supplemental . . . 1-63, 2-20
Air cleaner housing filter . . . 8-16
Air conditioner
  Air conditioner operation . . . 4-18
  Air conditioner service . . . 4-23
  Air conditioner specification label . . . 10-12
  Air conditioner system refrigerant and oil recommendations . . . 10-7
  Air conditioner system refrigerant recommendations . . . 10-7
  Heater and air conditioner controls . . . 4-15
  Servicing air conditioner . . . 4-23
Air flow charts . . . 4-19
Alarm system
(See vehicle security system) . . . 2-24
Anchor point locations . . . 1-27
Antenna . . . 4-42
Antifreeze . . . 5-36
Anti-lock brake warning light . . . 2-15
Anti-lock Braking System (ABS) . . . 5-31
Armrests . . . 1-5
Audible reminders . . . 2-23
Audio system . . . 4-23
  AM/FM radio . . . 4-28
  AM radio reception . . . 4-24
  Auxliliary (AUX) devices operation . . . 4-30
  Bluetooth® audio . . . 4-37
  FM/AM/SAT radio with compact disc (CD) player . . . 4-26
  FM radio reception . . . 4-23
  iPod® Player . . . 4-34
  iPod® player operation . . . 4-34
  Radio . . . 4-23
  Steering wheel audio control switch . . . 4-41
  USB interface . . . 4-31
  USB (Universal Serial Bus) Connection Port . . . 4-31
Automatic
  Automatic power window switch . . . 2-43
Automatic door locks . . . 3-7

B

Battery . . . 5-36, 8-12
  Charge warning light . . . 2-16
Battery replacement . . . 8-22
  Key fob . . . 8-22, 8-22
  NISSAN Intelligent Key® . . . 8-24
Before starting the engine . . . 5-15
Belt (See drive belt) . . . 8-14
Bluetooth® audio . . . 4-37
Bluetooth® hands-free phone system . . . 4-46
  Bluetooth® connections . . . 4-61
  Connecting procedure . . . 4-52
  Text messaging . . . 4-58
  Voice commands . . . 4-53
Booster seats . . . 1-41
Brake
  Anti-lock Braking System (ABS) . . . 5-31
  Brake fluid . . . 8-9
  Brake light (See stop light) . . . 8-27
  Brake system . . . 5-31
  Brake warning light . . . 2-15
  Brake wear indicators . . . 2-23, 8-18
  Parking brake operation . . . 5-23
  Self-adjusting brakes . . . 8-18
Brake assist . . . 5-32
Brake fluid . . . 8-9
Brakes . . . 8-18
Brake system . . . 5-31
Break-in schedule . . . 5-26
Brightness/contrast button . . . 4-7
Brightness control
  Instrument panel . . . 2-30
Bulb check/instrument panel . . . 2-15
Bulb replacement . . . 8-27

C

Capacities and recommended fuel/lubricants . . . 10-2
Cargo cover . . . 2-40
Cargo
(See vehicle loading information) . . . 10-13
Car phone or CB radio . . . 4-46

Checking bulbs 2-15
Child restraints 1-20, 1-21, 1-23, 1-25
LATCH (Lower Anchors and Tethers for CHildren) System. 1-25
Precautions on child restraints 1-23, 1-30, 1-36, 1-41
Top tether strap anchor point locations 1-27
Child restraint with top tether strap 1-27
Child safety rear door lock 3-8
Chimes, audible reminders 2-23
Cleaning exterior and interior 7-2, 7-4
Clock set/adjustment 4-5
Clutch
Clutch fluid 8-10
C.M.V.S.S. certification label 10-11
Cold weather driving 5-36
Continuously Variable Transmission (CVT) 5-10, 5-17
Continuously Variable Transmission (CVT) fluid 8-9
Driving with Continuously Variable Transmission (CVT) 5-10, 5-17
Control panel buttons 4-3
Brightness/contrast button 4-7
Enter button 4-3
Setting button 4-5
Controls
Audio controls (steering wheel) 4-41
Heater and air conditioner controls . .4-15
Coolant
Capacities and recommended fuel/lubricants 10-2
Changing engine coolant 8-5
Checking engine coolant level 8-5
Engine coolant temperature gauge . .2-9
Corrosion protection 7-7
Cruise control 5-24
Cup holders 2-37
Curtain side-impact and rollover air bag 1-60

D

Daytime running light system (Canada only). 2-29
Defroster switch
Rear window defroster switch 2-28
Dimensions and weights. 10-9
Dimmer switch for instrument panel . . .2-30
Display controls (see control panel buttons) 4-3
Door locks 3-5, 3-6
Door open warning light 2-16
Drive belt 8-14
Driving
Cold weather driving 5-36
Driving with Continuously Variable Transmission (CVT) 5-10, 5-17
Driving with manual transmission . . .5-22
Precautions when starting and driving 5-2
Driving the vehicle 5-17

E

Economy - fuel. 5-28
Emergency engine shutoff. 5-14
Emission control information label 10-11
Emission control system warranty 10-18
Engine
Before starting the engine 5-15
Capacities and recommended fuel/lubricants 10-2
Changing engine coolant 8-5
Changing engine oil 8-7
Changing engine oil filter 8-8
Checking engine coolant level 8-5
Checking engine oil level 8-6
Engine compartment check locations 8-3
Engine coolant temperature gauge . .2-9
Engine cooling system 8-4
Engine oil 8-6
Engine oil and oil filter recommendation 10-6
Engine oil pressure warning light. . . .2-16
Engine oil viscosity. 10-7
Engine serial number. 10-11
Engine specifications 10-8
Starting the engine 5-16
Engine Block Heater 5-37
Engine coolant temperature gauge 2-9
Enter button 4-3
Event Data recorders 10-20
Exhaust gas (Carbon monoxide). 5-2
Explanation of maintenance items 9-2
Explanation of scheduled maintenance items 9-5
Extended storage switch. 8-21

F

Flashers
(See hazard warning flasher switch) 6-2

Flat tire 6-3, 6-3
Floor mat positioning aid 7-6
Fluid
Brake fluid 8-9
Capacities and recommended fuel/lubricants 10-2
Clutch fluid 8-10
Continuously Variable Transmission (CVT) fluid 8-9
Engine coolant 8-4
Engine oil 8-6
F.M.V.S.S. certification label. 10-11
Fog light switch 2-31
Front air bag system
(See supplemental restraint system) . . .1-55
Front-door pocket. 2-35
Front seats 1-2
Fuel
Capacities and recommended fuel/lubricants 10-2
Fuel economy 5-28
Fuel-filler door lock opener lever 3-28
Fuel gauge 2-10
Fuel octane rating 10-6
Fuel recommendation 10-4
Loose fuel cap warning 2-7, 3-29
Fuel efficient driving tips 5-27
Fuel-filler door 3-28
Fuel gauge 2-10
Fuses 8-19
Fusible links 8-19

G

Gauge
Engine coolant temperature gauge . .2-9
Fuel gauge 2-10
Odometer 2-6
Speedometer 2-5
Tachometer 2-8
Trip computer. 2-11
Trip odometer 2-6
General maintenance 9-2
Glove box 2-36

H

Hands-free phone system, Bluetooth® . .4-46
Hazard warning flasher switch. 6-2
Headlight and turn signal switch. 2-28
Headlight control switch. 2-28
Headlights 8-25
Head restraints 1-6
Heated seats 2-32
Heated seat switches 2-32
Heater
Heater and air conditioner controls . .4-15
Heater operation. 4-17
Hood release 3-26
Horn 2-32

I

Ignition switch 5-9
Push-button ignition switch 5-11
Immobilizer system. 2-24, 5-11, 5-15
Important vehicle information label. . . .10-11
Increasing fuel economy 5-28
Indicator
NISSAN Intelligent Key® battery discharge indicator 5-14
Indicator lights and audible reminders
(See warning/indicator lights and audible reminders) 2-14, 2-20
Instrument brightness control 2-30
Instrument panel 0-6, 2-2
Instrument panel dimmer switch 2-30
Intelligent Key system
Key operating range. 3-14
Key operation 3-15
Mechanical key 3-4
Remote keyless entry operation. .3-9, 3-18
Troubleshooting guide. 3-24, 3-25
Warning signals 3-24, 3-25
Interior light 2-43, 2-44
iPod® Player. 4-34
ISOFIX child restraints 1-25

J

Jump starting 6-12, 8-13

K

Key 3-2
Key fob battery replacement. 8-22, 8-22
Keyless entry
With Intelligent Key system
(See Intelligent Key system). 3-9, 3-18

Keys
NISSAN Intelligent Key® 3-3, 3-12
NISSAN Vehicle Immobilizer System keys 3-5

L

Label
Tire and Loading Information label . .10-12
Labels
Air conditioner specification label . . .10-12
C.M.V.S.S. certification label 10-11
Emission control information label . .10-11
Engine serial number. 10-11
F.M.V.S.S. certification label. 10-11
Tire and Loading Information label . .10-12
Vehicle identification number (VIN) . .10-10
Vehicle identification number (VIN) plate. 10-10
Warning labels (for SRS). 1-63
LATCH (Lower Anchors and Tethers for CHildren) System. 1-25
Launch bar menu. 4-7
License plate
Installing the license plate 10-13
Light
Air bag warning light 1-63, 2-20
Brake light (See stop light). 8-27
Bulb check/instrument panel. 2-15
Bulb replacement 8-27
Charge warning light 2-16
Exterior and Interior lights 8-27
Fog lights 8-26
Fog light switch 2-31
Headlight and turn signal switch. . . .2-28
Headlight control switch. 2-28
Headlights 8-25
Interior light 2-43, 2-44
Light bulbs 8-25
Low tire pressure warning light 2-17
Low windshield-washer fluid warning light 2-19
Passenger air bag and status light. . .1-55
Security indicator light 2-22
Warning/indicator lights and audible reminders. 2-14, 2-20
Lights 8-25
Lock
Child safety rear door lock 3-8
Door locks 3-5, 3-6
Fuel-filler door lock opener lever 3-28
Power door locks 3-7
Loose fuel cap warning 2-7, 3-29
Low fuel warning light. 2-17
Low tire pressure warning light 2-17
Low windshield-washer fluid warning light 2-19
Luggage
(See vehicle loading information) 10-13

M

Maintenance
General maintenance 9-2
Inside the vehicle 9-3
Maintenance precautions. 8-2
Outside the vehicle 9-2
Seat belt maintenance 1-19
Under the hood and vehicle 9-4
Maintenance log 9-13
Maintenance requirements. 9-2
Maintenance schedules 9-7
Maintenance under severe operation conditions 9-12
Malfunction indicator light 2-21
Manual front seat adjustment 1-3
Manual windows. 2-43
Meters and gauges. 2-3
Instrument brightness control 2-30
Mirror
Outside mirrors 3-33
Rearview. 3-32
Vanity mirror 3-32
Mirrors 3-32

N

NissanConnect® Owner's Manual 4-2
NISSAN Intelligent Key® 3-3, 3-12
NISSAN Intelligent Key® battery discharge indicator 5-14
NISSAN Vehicle Immobilizer System 2-24, 5-11, 5-15

O

Octane rating (See fuel octane rating) . .10-6
Odometer 2-6
Oil
Capacities and recommended fuel/lubricants 10-2
Changing engine oil 8-7
Changing engine oil filter 8-8
Checking engine oil level 8-6

Engine oil 8-6
Engine oil and oil filter recommendation 10-6
Engine oil viscosity. 10-7
Outside mirrors 3-33
Overheat
If your vehicle overheats 6-14
Owner's manual order form 10-21
Owner's manual/service manual order information 10-21

P

Parking
Parking brake operation 5-23
Parking/parking on hills 5-29
Parking brake. 5-23
Phone, Bluetooth® hands-free system . .4-46
Power
Power door locks 3-7
Power outlet 2-34
Power steering system. 5-30
Power windows 2-41
Rear power windows 2-42
Power outlet 2-34
Power steering. 5-30
Precautions
Maintenance precautions. 8-2
Precautions on booster seats 1-23, 1-30, 1-36, 1-41
Precautions on child restraints 1-23, 1-30, 1-36, 1-41
Precautions on seat belt usage 1-10
Precautions on supplemental restraint system 1-44
Precautions when starting and driving 5-2
Programmable features. 4-5
Push starting 6-14

R

Radio
Car phone or CB radio 4-46
FM/AM/SAT radio with compact disc (CD) player 4-26
Steering wheel audio control switch. .4-41
Readiness for inspection maintenance (I/M) test 10-20
Rear center seat belt 1-16
Rear power windows 2-42
Rear seat 1-4
Rearview mirror 3-32
RearView Monitor. 4-8
Rear window defroster switch 2-28
Rear window wiper and washer switches. 2-27
Recommended Fluids 10-2
Recorders
Event Data. 10-20
Refrigerant recommendation 10-7
Registering a vehicle in another country 10-10
Reporting safety defects (US only) 10-19

S

Safety
Child safety rear door lock 3-8
Child seat belts. 1-23, 1-30, 1-36, 1-41
Reporting safety defects (US only) . .10-19
Seat adjustment
Front manual seat adjustment. 1-3
Rear seat adjustment 1-4
Seatback pockets 2-35
Seat belt
Child safety 1-20
Infants and small children 1-21
Injured Person. 1-13
Larger children 1-21
Precautions on seat belt usage 1-10
Pregnant women. 1-13
Rear center seat belt 1-16
Seat belt extenders 1-19
Seat belt maintenance 1-19
Seat belts 1-10, 7-6
Shoulder belt height adjustment 1-19
Three-point type with retractor 1-13
Seat belt extenders 1-19
Seat belt warning light 1-13, 2-20
Seats
Adjustment 1-2
Armrests 1-5
Front seats 1-2
Heated seats 2-32
Manual front seat adjustment 1-3
Rear seat 1-4
Security indicator light 2-22
Security system (NISSAN Vehicle Immobilizer System), engine start 2-24, 5-11, 5-15
Security systems
Vehicle security system 2-24
Self-adjusting brakes 8-18
Service manual order form 10-21
Servicing air conditioner 4-23

Setting button 4-5
Shifting
Continuously Variable Transmission (CVT) 5-19
Manual transmission 5-22
Shift lever lock release 5-20
Shoulder belt height adjustment 1-19
Side air bag system (See supplemental side air bag, curtain and rollover air bag systems). 1-60
Siri® Eyes-Free 4-42
Spark plug replacement 8-15
Spark plugs 8-15
Specifications 10-8
Speedometer 2-5
SRS warning label 1-63
Standard maintenance 9-8
Starting
Before starting the engine 5-15
Jump starting 6-12, 8-13
Precautions when starting and driving 5-2
Push starting 6-14
Starting the engine 5-16
Starting the engine 5-16
Steering
Power steering system. 5-30
Tilting steering wheel 3-31
Steering wheel 3-31
Steering wheel audio control switch. . . .4-41
Stop light 8-27
Storage 2-35
Storage tray 2-36
Sun visors 3-31
Supplemental air bag warning labels . . .1-63
Supplemental air bag warning light 1-63, 2-20
Supplemental front impact air bag system 1-55
Supplemental restraint system
Information and warning labels 1-63
Precautions on supplemental restraint system 1-44
Supplemental restraint system (Supplemental air bag system) 1-44
Switch
Automatic power window switch . . .2-43
Fog light switch 2-31
Hazard warning flasher switch. 6-2
Headlight and turn signal switch. . . .2-28
Headlight control switch. 2-28
Ignition switch 5-9
Instrument brightness control 2-30
Power door lock switch 3-7
Rear window defroster switch 2-28
Rear window wiper and washer switches 2-27
Turn signal switch 2-31

T

Tachometer 2-8
Temperature gauge
Engine coolant temperature gauge . .2-9
Theft (NISSAN Vehicle Immobilizer System), engine start 2-24, 5-11, 5-15
Three-way catalyst 5-2
Tilting steering wheel 3-31
Tire
Flat tire 6-3, 6-3
Spare tire 6-4, 8-41
Tire and Loading Information label . .10-12
Tire chains 8-37
Tire pressure 8-30
Tire rotation 8-38
Types of tires 8-36
Uniform tire quality grading. 10-17
Wheels and tires. 8-30, 10-9
Wheel/tire size 10-9
Tire pressure
Low tire pressure warning light 2-17
Tire Pressure Monitoring System (TPMS). .5-3
Top tether strap child restraint 1-27
Towing
2-wheel drive models. 6-16, 6-17
Flat towing 10-17
Tow truck towing 6-15
Trailer towing 10-17
Towing a trailer 10-17
Transmission
Continuously Variable Transmission (CVT) fluid 8-9
Driving with Continuously Variable Transmission (CVT) 5-10, 5-17
Driving with manual transmission . . .5-22
Transmission shift lever lock release . . .5-20
Travel (See registering a vehicle in another country). 10-10
Trip computer. 2-11
Trip odometer 2-6
Turn signal switch 2-31

U

Uniform tire quality grading 10-17
USB interface 4-31

V

Vanity mirror 3-32
Variable voltage control system 8-14
Vehicle dimensions and weights 10-9
Vehicle Dynamic Control (VDC) OFF switch 2-33
Vehicle Dynamic Control (VDC) system . .5-33
Vehicle identification 10-10
Vehicle identification number (VIN) 10-10
Vehicle identification number (VIN) (Chassis number) 10-10
Vehicle identification number (VIN) plate 10-10
Vehicle immobilizer system . . .2-24, 5-11, 5-15
Vehicle loading information 10-13, 10-14
Vehicle recovery 6-17
Vehicle security system 2-24
Vehicle security system (NISSAN Vehicle Immobilizer System), engine start 2-24, 5-11, 5-15
Ventilators 4-14
Visors 3-31
Voice Prompt Interrupt 4-50

W

Warning
- Air bag warning light 1-63, 2-20
- Anti-lock brake warning light 2-15
- Battery charge warning light 2-16
- Brake warning light 2-15
- Door open warning light 2-16
- Engine oil pressure warning light 2-16
- Hazard warning flasher switch 6-2
- Loose fuel cap warning 2-7, 3-29
- Low fuel warning light 2-17
- Low tire pressure warning light 2-17
- Low windshield-washer fluid warning light 2-19
- Passenger air bag and status light . . .1-55
- Seat belt warning light 1-13, 2-20
- Supplemental air bag warning light 1-63, 2-20
- Vehicle security system 2-24
- Warning/indicator lights and audible reminders 2-14, 2-20
- Warning labels (for SRS) 1-63

Warning/indicator lights and audible reminders 2-14, 2-20
- Audible reminders 2-14, 2-20
- Checking bulbs 2-15
- Indicator lights 2-14, 2-20
- Warning lights 2-14, 2-20

Warning lights 2-14, 2-20
Warning lights, indicator lights and audible reminders 2-14
Washer switch
- Rear window wiper and washer switches 2-27

Weights (See dimensions and weights) . .10-9
Wheels and tires 8-30, 10-9
Wheel/tire size 10-9
When traveling or registering in another country 10-10
Windows 2-41
- Locking passengers' windows 2-42
- Manual windows 2-43
- Power windows 2-41
- Rear power windows 2-42

Windshield-washer fluid 8-10
Windshield wiper blades 8-16
Wiper
- Rear window wiper and washer switches 2-27
- Wiper blades 8-16

Wiper and washer switch 2-26

MEMO

MEMO

MEMO

FUEL RECOMMENDATION:

Use unleaded regular gasoline with an octane rating of at least 87 AKI (Anti-Knock Index) number (Research octane number 91).

⚠ CAUTION

- **Only vehicles with the E-85 filler door label can operate on E-85. Fuel system or other damage can occur if E-85 is used in vehicles that are not designed to run on E-85.**
- **Using a fuel other than that specified could adversely affect the emission control system, and may also affect the warranty coverage.**
- **Under no circumstances should a leaded gasoline be used, because this will damage the three-way catalyst.**
- **Do not use a fuel containing more than 15% ethanol in your vehicle. Your vehicle is not designed to run on a fuel containing more than 15% ethanol. Using a fuel containing more than 15% ethanol in a vehicle not specifically designed for a fuel containing more than 15% ethanol can adversely affect the emission control devices and systems of the vehicle. Damage caused by such fuel is not covered by the NISSAN New Vehicle Limited Warranty.**
- **Do not use fuel that contains the octane booster methylcyclopentadienyl manganese tricarbonyl (MMT). Using fuel containing MMT may adversely affect vehicle performance and vehicle emissions. Not all fuel dispensers are labeled to indicate MMT content, so you may have to consult your gasoline retailer for more details. Note that Federal and California laws prohibit the use of MMT in reformulated gasoline.**
- **U.S. government regulations require ethanol dispensing pumps to be identified by a small, square, orange and black label with the common abbreviation or the appropriate percentage for that region.**

For additional information, refer to "Recommended fluids/lubricants and capacities" in the "Technical and consumer information" section of this manual.

ENGINE OIL RECOMMENDATION:

- Genuine "Nissan Motor Oil 0W-20" (or equivalent)

For additional information, refer to "Engine oil and oil filter recommendations" in the "Technical and consumer information" section of this manual.

COLD TIRE PRESSURE:

For additional information, refer to "Tire and Loading Information label" in the "Technical and consumer information" section of this manual.

The label is typically located on the driver side center pillar or on the driver's door. For additional information, refer to "Wheels and tires" in the "Do-it-yourself" section of this manual.

RECOMMENDED NEW VEHICLE BREAK-IN PROCEDURE:

During the first 1,200 miles (2,000 km) of vehicle use, follow the break-in procedure recommendations for the future reliability and economy of your new vehicle. For additional information, refer to "Break-in schedule" in the "Starting and driving" section of this manual. Failure to follow these recommendations may result in vehicle damage or shortened engine life.

Printing : September 2018
Publication No.: OM19EM 0E12U1
Printed in the U.S.A.

'19 E12-D