2018

FIAT® 500/500c

OWNER'S MANUAL

DEALER ePROCESS

VEHICLES SOLD IN CANADA

With respect to any Vehicles Sold in Canada, the name FCA US LLC shall be deemed to be deleted and the name FCA Canada Inc. used in substitution therefore.

DRIVING AND ALCOHOL

Drunken driving is one of the most frequent causes of accidents.

Your driving ability can be seriously impaired with blood alcohol levels far below the legal minimum. If you are drinking, don't drive. Ride with a designated non-drinking driver, call a cab, a friend, or use public transportation.

WARNING!
Driving after drinking can lead to an accident. Your perceptions are less sharp, your reflexes are slower, and your judgment is impaired when you have been drinking. Never drink and then drive.

This manual illustrates and describes the operation of features and equipment that are either standard or optional on this vehicle. This manual may also include a description of features and equipment that are no longer available or were not ordered on this vehicle. Please disregard any features and equipment described in this manual that are not on this vehicle.

FCA US LLC reserves the right to make changes in design and specifications, and/or make additions to or improvements to its products without imposing any obligation upon itself to install them on products previously manufactured.

Copyright © 2018 FCA US LLC

DEP
DEALER ePROCESS

TABLE OF CONTENTS

SECTION		PAGE
1	INTRODUCTION	3
2	GRAPHICAL TABLE OF CONTENTS	7
3	GETTING TO KNOW YOUR VEHICLE	13
4	GETTING TO KNOW YOUR INSTRUMENT PANEL	71
5	SAFETY	99
6	STARTING AND OPERATING	159
7	IN CASE OF EMERGENCY	195
8	SERVICING AND MAINTENANCE	229
9	TECHNICAL SPECIFICATIONS	283
10	MULTIMEDIA	295
11	CUSTOMER ASSISTANCE	315
12	INDEX	321

DEP
DEALER ePROCESS

DEP
DEALER ePROCESS

INTRODUCTION

CONTENTS

■ INTRODUCTION 4
■ HOW TO USE THIS MANUAL 5
□ Essential Information 5
□ Symbols 5
■ WARNINGS AND CAUTIONS 5
■ VEHICLE MODIFICATIONS/ALTERATIONS 5

DEP
DEALER ePROCESS

INTRODUCTION

Dear Customer,

Congratulations on selecting your new vehicle. Be assured that it represents precision workmanship, distinctive styling, and high quality. This Owner's Manual has been prepared with the assistance of service and engineering specialists to acquaint you with the operation and maintenance of your vehicle. It is supplemented by Warranty Information, and customer oriented documents. In the attached Warranty Booklet, you will find a description of the services that FCA offers to its customers, the Warranty Certificate and the details of the terms and conditions for maintaining its validity. Please take the time to read all of these publications carefully before driving your vehicle for the first time. Following the instructions, recommendations, tips, and important warnings in this manual will help assure safe and enjoyable operation of your vehicle. Be sure you are familiar with all vehicle controls, particularly those used for braking, steering, transmission, and transfer case shifting (if equipped). Learn how your vehicle handles on different road surfaces. Your driving skills will improve with experience.

This Owner's Manual describes all versions of this vehicle. Options and equipment dedicated to specific markets or versions are not expressly indicated in the text. Therefore, you should only consider the information which is related to the trim level, engine, and version that you have purchased. Any content introduced throughout the Owner's Information, that may or may not be applicable to your vehicle, will be identified with the wording "If Equipped". All data contained in this publication are intended to help you use your vehicle in the best possible way. FCA aims at a constant improvement of the vehicles produced. For this reason, it reserves the right to make changes to the model described for technical and/or commercial reasons. For further information, contact an authorized dealer.

NOTE: After reviewing the Owner's Information, it should be stored in the vehicle for convenient referencing, and remain with the vehicle when sold.

When it comes to service, remember that an authorized dealer knows your vehicle best, has factory-trained technicians and genuine MOPAR® parts, and cares about your satisfaction.

DEP
DEALER ePROCESS

HOW TO USE THIS MANUAL

Essential Information

Consult the Table of Contents to determine which section contains the information you desire.

Since the specification of your vehicle depends on the items of equipment ordered, certain descriptions and illustrations may differ from your vehicle's equipment.

The detailed index at the back of this Owner's Manual contains a complete listing of all subjects.

Symbols

Some vehicle components have colored labels whose symbols indicate precautions to be observed when using this component. Refer to "Warning Lights and Messages" in "Getting To Know Your Instrument Panel" for further information on the symbols used in your vehicle.

WARNINGS AND CAUTIONS

This Owner's Manual contains **WARNINGS** against operating procedures that could result in a collision, bodily injury and/or death. It also contains **CAUTIONS** against procedures that could result in damage to your vehicle. If you do not read this entire Owner's Manual, you may miss important information. Observe all Warnings and Cautions.

VEHICLE MODIFICATIONS/ALTERATIONS

WARNING!

Any modifications or alterations to this vehicle could seriously affect its roadworthiness and safety and may lead to a collision resulting in serious injury or death.

DEP DEALER ePROCESS

DEP
DEALER ePROCESS

GRAPHICAL TABLE OF CONTENTS

CONTENTS

- FRONT VIEW 8
- REAR VIEW 9
- INSTRUMENT PANEL 10
- INTERIOR 11

DEALER ePROCESS

FRONT VIEW

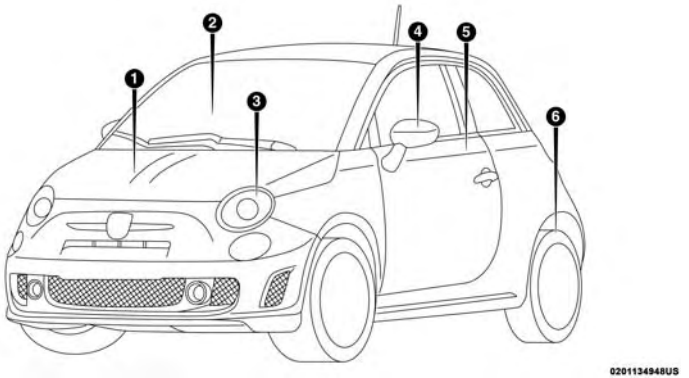

Front View

1 — Hood / Engine Compartment
2 — Windshield
3 — Headlights
4 — Exterior Mirrors
5 — Doors
6 — Wheels / Tires

DEP
DEALER ePROCESS

REAR VIEW

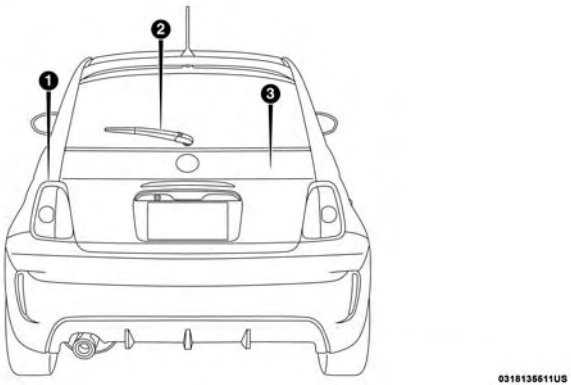

Rear View

1 — Rear Lights
2 — Rear Windshield Wiper
3 — Liftgate

DEP
DEALER ePROCESS

INSTRUMENT PANEL

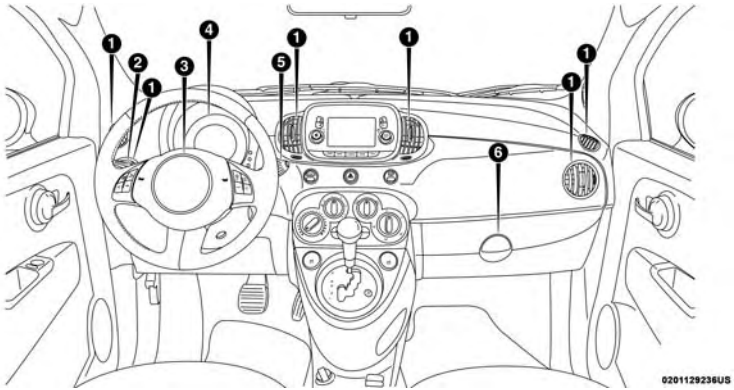

Instrument Panel

1 — Air Vents
2 — Multifunction Lever
3 — Steering Wheel
4 — Instrument Cluster
5 — Windshield Wiper Lever
6 — Glove Compartment

DEP
DEALER ePROCESS

INTERIOR

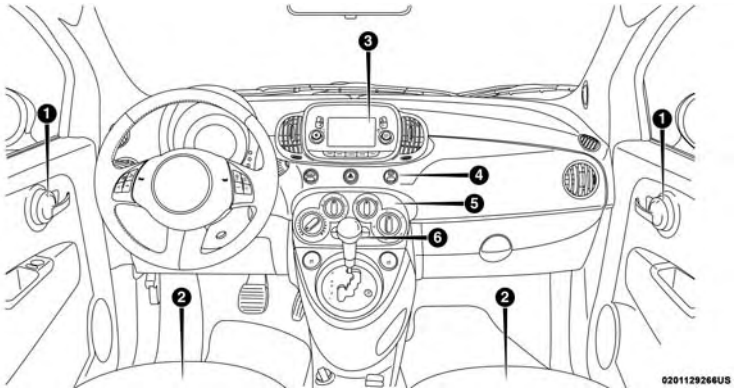

Interior

1 — Door Handles
2 — Seats
3 — Radio
4 — Switch Panel
5 — Climate Controls
6 — Gear Selector

DEP
DEALER ePROCESS

DEP
DEALER ePROCESS

GETTING TO KNOW YOUR VEHICLE

CONTENTS

- KEYS 16
  - Key With Remote Control 16
- IGNITION SWITCH 19
  - Mechanical Ignition Switch 19
  - Key-In-Ignition Reminder 21
- SENTRY KEY 21
  - Customer Key Programming 21
  - Replacement Keys 21
  - General Information 22
- VEHICLE SECURITY ALARM 22
  - To Arm The System 22
  - To Disarm The System 23
  - Central Lock/Unlock (Switch Safe Lock Device) — If Equipped 23
- DOORS 24
  - Manual Lock 24
  - Power Door Locks 25
- SEATS 26
  - Manual Adjustment Front Seats 26
  - Heated Seats — If Equipped 29
  - Manual Folding Rear Seat 30
- HEAD RESTRAINTS 31
  - Reactive Head Restraints — Front Seats 31
  - Rear Head Restraints 33
- STEERING WHEEL 34
  - Tilt Steering Column — If Equipped 34
- MIRRORS 34
  - Inside Day/Night Mirror 34

DEP DEALER ePROCESS

- Automatic Dimming Mirror — If Equipped 35
- Power Mirrors 36
- Folding Mirrors 36
- Spotter Mirror — If Equipped 37
- Heated Mirrors — If Equipped 37

■ EXTERIOR LIGHTS 37
- Multifunction Lever 37
- Headlights 38
- Daytime Running Lights 38
- High Beams 38
- Flash-To-Pass 38
- Parking Lights 39
- Follow Me Home/Headlight Delay 39
- Fog Lights — If Equipped 39
- Turn Signals 40
- Lane Change Assist 40

■ INTERIOR LIGHTS 40
- Interior Light Timing (Center Position) 41
- Interior Light Timing (On/Right Position) 41
- Cargo Area Lights 41

■ WIPERS AND WASHERS 42
- Front Windshield Wiper Operation 42
- Rear Windshield Wiper 43

■ CLIMATE CONTROLS 44
- Manual Climate Control Overview 44
- Automatic Temperature Control Overview 48
- Automatic Temperature Control (ATC) — If Equipped 53
- Operating Tips 54

■ WINDOWS 56
- Power Window Controls 56
- Auto-Down 57
- Wind Buffeting 57

DEP DEALER ePROCESS

■ POWER SUNROOF — IF EQUIPPED 57
□ To Open 58
□ To Close 58
□ Wind Buffeting 58
□ Sun Shade — If Equipped 59
□ Pinch Protect Feature 59
□ Emergency Operation. 59
■ POWER CONVERTIBLE TOP — IF EQUIPPED . . .59
□ Lowering The Power Top 60
□ Raising The Power Top 60
□ Power Convertible Top Relearn Procedure 62
□ Wind Stop. 62
■ HOOD 63
□ Opening 63
□ Closing. 64
■ LIFTGATE 65
□ Opening 65
■ INTERNAL EQUIPMENT 66
□ Storage 66
□ Cupholders 66
□ Sun Visors. 67
□ Electrical Power Outlets 68

DEP
DEALER ePROCESS

KEYS

Key With Remote Control

The Remote Keyless Entry (RKE) key fob contains an integrated key. To use the mechanical key, simply push the mechanical key release button.

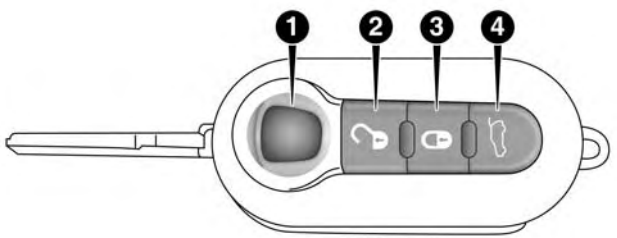

0307129319US

Integrated Key

1 — Mechanical Key Release Button
2 — Unlock Button
3 — Lock Button
4 — Liftgate Button

NOTE: The authorized dealer that sold you your vehicle has the key code numbers for your vehicle locks. These numbers can be used to order duplicate keys from your authorized dealer.

To Unlock The Doors And Liftgate

Push and release the unlock button on the key fob once to unlock the driver's door or twice, within five seconds, to unlock all doors, and the liftgate. The turn signal lights will flash to acknowledge the unlock signal. The illuminated entry system will also turn on.

To Lock The Doors And Liftgate

Push and release the lock button on the key fob to lock all doors and the liftgate. The turn signal lights will flash and the horn will chirp to acknowledge the signal.

Locking Doors With A Key

1. Insert the key with either side up.
2. Turn the key to the right to lock the door.
3. Turn the key to the left to unlock the door.

DEP
DEALER ePROCESS

Opening Power Top Remote Function

The remote keyless power top function can only be used with the engine off.

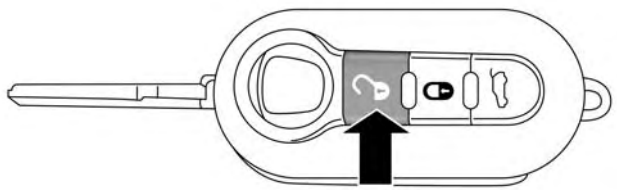

0307129316US

Key Fob Unlock/Power Top Open Button Location

NOTE: The remote keyless power top function can be used to open the power top to the spoiler position.

Opening Power Top Remote Function:

OPEN — Push and hold the unlock button down on the key fob for a minimum of three seconds to initiate Power Top Open. The roof will stop opening whenever the unlock button on the key fob is released, or when it reaches the spoiler position.

WARNING!

Failure to follow these warnings can result in injuries that are serious or fatal to you, your passengers, and others around you:

- **Before operating the power top, make sure that no moving parts of the convertible top can injure a person or animal.**
- **Never place any extremities (hands, feet, etc.) near the convertible top components, the upper windshield area, the shelf area behind the rear seats, or the convertible top stowage area while raising or lowering the convertible top.**
- **When using the power top button on the key fob, if potential danger exists while lowering the top, release the button immediately to interrupt the operation.**

DEP DEALER ePROCESS

Replacing The Battery In The Key With Remote Control

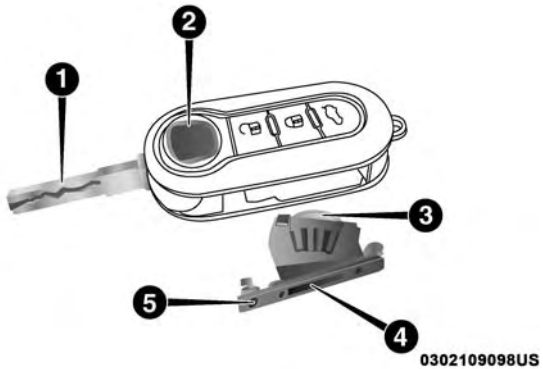

Key Fob Components

1 — Mechanical Key
2 — Mechanical Key Release Button
3 — Battery
4 — Battery Case
5 — Screw

To replace the battery, proceed as follows:

1. Push mechanical release button to open the mechanical key.
2. Turn the screw to unlock using a small screwdriver.
3. Take out the battery case and replace the battery making sure that polarities are correct.
4. Refit the battery case inside the key and lock it turning the screw to lock.

NOTE: Used batteries should be properly disposed of as specified by law, see an authorized dealer for assistance needed.

Programming Additional Key Fobs

Programming the key fob may be performed by an authorized dealer.

NOTE: Once a key fob is programmed to a vehicle, it cannot be repurposed and reprogrammed to another vehicle.

Request For Additional Remote Controls

The system can recognize up to eight remote controls. Should a new remote control be necessary, go to an authorized dealer, taking an ID document and the car ownership documents.

DEALER ePROCESS

General Information

The following regulatory statement applies to all radio frequency (RF) devices equipped in this vehicle:

This device complies with Part 15 of the FCC Rules and with Industry Canada license-exempt RSS standard(s). Operation is subject to the following two conditions:

1. This device may not cause harmful interference, and
2. This device must accept any interference received, including interference that may cause undesired operation.

NOTE: Changes or modifications not expressly approved by the party responsible for compliance could void the user's authority to operate the equipment.

IGNITION SWITCH

Mechanical Ignition Switch

The ignition switch can be turned to three different positions:

- STOP: engine off, key can be removed. Some electrical devices (e.g. sound system, central door locking system, etc.) can operate.

NOTE: The transmission must be shifted into PARK before the key is turned to the STOP position. Then, the key can be removed.

- AVV: engine start-up.
- MAR: driving position. All electrical devices are enabled.

If the key is turned to the STOP position before shifting into park, the key will have to be moved to the driving (MAR) position and back to STOP. Then, the key can be removed.

DEP DEALER ePROCESS

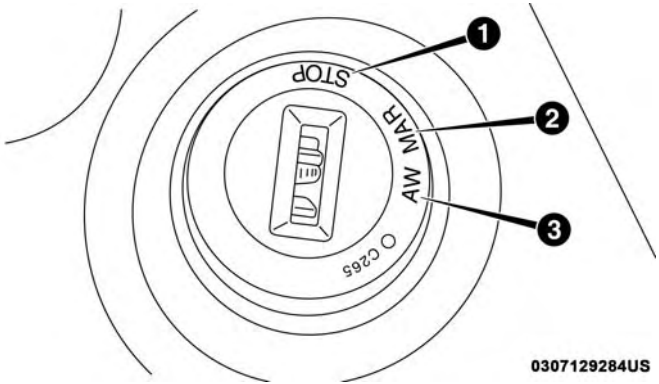

Ignition Switch

1 — STOP (OFF/LOCK)
2 — MAR (ACC/ON/RUN)
3 — AVV (START)

WARNING!

- **Before exiting a vehicle, always shift the automatic transmission into PARK or the manual transmission into FIRST gear or REVERSE, apply the parking brake, then turn the engine OFF, remove the key fob from the vehicle and lock your vehicle.**

(Continued)

WARNING! *(Continued)*

- **Never leave children alone in a vehicle, or with access to an unlocked vehicle.**
- **Allowing children to be in a vehicle unattended is dangerous for a number of reasons. A child or others could be seriously or fatally injured. Children should be warned not to touch the parking brake, brake pedal or the gear selector.**
- **Do not leave the key fob in or near the vehicle, or in a location accessible to children. A child could operate power windows, other controls, or move the vehicle.**
- **Do not leave children or animals inside parked vehicles in hot weather. Interior heat build-up may cause serious injury or death.**

CAUTION!

An unlocked vehicle is an invitation. Always remove the key from the ignition and lock all doors when leaving the vehicle unattended.

DEALER ePROCESS

Key-In-Ignition Reminder

Opening the driver's door when the key is in the ignition and the ignition switch position is in the OFF/LOCK position, a signal sounds to remove the key.

SENTRY KEY

The Sentry Key Immobilizer System prevents unauthorized vehicle operation by disabling the vehicle. The system does not need to be armed or activated. Operation is automatic, regardless of whether the vehicle is locked or unlocked.

The system uses ignition keys which have an embedded electronic chip (transponder) to prevent unauthorized vehicle operation. Therefore, only keys that are programmed to the vehicle can be used to start and operate the vehicle.

NOTE: A key which has not been programmed is also considered an invalid key, even if it is cut to fit the ignition switch lock cylinder for that vehicle.

If the vehicle security light is on after the key is turned to the MAR (ACC/ON/RUN) position, it indicates that there is a problem with the electronics.

CAUTION!

- **Always remove the Sentry Key from the vehicle and lock all doors when leaving the vehicle unattended.**
- **The Sentry Key Immobilizer system is not compatible with some aftermarket remote starting systems. Use of these systems may result in vehicle starting problems and loss of security protection.**

All of the keys provided with your new vehicle have been programmed to the vehicle electronics.

Customer Key Programming

Programming key fobs may be performed at an authorized dealer.

Replacement Keys

NOTE: Only keys that have been programmed to the vehicle electronics can be used to start the vehicle. Once a Sentry Key has been programmed to a vehicle, it cannot be programmed to any other vehicle. **When having the Sentry Key Immobilizer System serviced, bring all vehicle keys with you to an authorized dealer.**

DEP DEALER ePROCESS

General Information

The following regulatory statement applies to all radio frequency (RF) devices equipped in this vehicle:

This device complies with Part 15 of the FCC Rules and with Industry Canada license-exempt RSS standard(s). Operation is subject to the following two conditions:

1. This device may not cause harmful interference, and
2. This device must accept any interference received, including interference that may cause undesired operation.

NOTE: Changes or modifications not expressly approved by the party responsible for compliance could void the user's authority to operate the equipment.

VEHICLE SECURITY ALARM

The vehicle security alarm monitors the vehicle doors for unauthorized entry and the ignition switch for unauthorized operation. While the vehicle security alarm is armed, interior switches for door locks and liftgate release are disabled. If something triggers the alarm, the vehicle security alarm will provide the following audible and visible signals: the horn will pulse, the park lamps and/or turn signals will flash, and the vehicle security light on the instrument panel will flash.

To Arm The System

1. Remove the key from the ignition switch and get out of the vehicle.
2. Lock the door using either the Central Lock/Unlock switch or the Remote Keyless Entry key fob and close all doors.
3. The horn will sound and the vehicle security light in the instrument cluster will switch on for approximately three seconds. This shows that the vehicle security alarm is about to arm. During this period, if a door is opened, the ignition switch is turned to ON/RUN, or the power door locks are unlocked in any manner, the vehicle security alarm will automatically disarm. After approximately three seconds, the vehicle security light will flash. This shows that the vehicle security alarm is fully armed.

The activation of the vehicle security alarm is followed by a self-diagnosis stage. If a fault is detected during the self-diagnosis stage, the horn will sound a second time.

If the horn sounds a second time, check that all doors, hood and liftgate are closed correctly, then rearm the system.

DEP
DEALER ePROCESS

If the vehicle security alarm sounds the horn a second time even when all doors, hood and liftgate are correctly closed, a fault has occurred in the operation of the system. Contact an authorized dealer.

To Disarm The System

Push unlock on the key fob, or insert the key into the ignition switch and turn the ignition switch to the ON/RUN position.

NOTE: The vehicle security alarm will not disarm when the metal insert of the key is used on a single door lock cylinder.

The vehicle security alarm is designed to protect your vehicle; however, you can create conditions where the vehicle security alarm will arm unexpectedly. If you remain in the vehicle and lock the doors with the key fob, once the vehicle security alarm is armed, when you pull the door handle to exit, the alarm will sound. If this occurs, push the unlock button on the key fob to disarm the vehicle security alarm.

Central Lock/Unlock (Switch Safe Lock Device) — If Equipped

This safety device prevents the operation of the interior door handles and the door locking/unlocking button.

It prevents the opening of the doors from inside the passenger compartment, serving as an obstacle to break-in attempts (e.g. broken window).

We recommend that you activate the Safe Lock device each time you park your car.

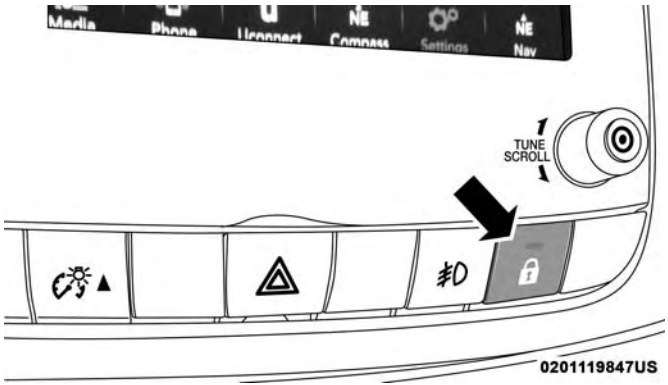

Safe Lock Device Location

DEP
DEALER ePROCESS

Activating The Safe Lock Device

The Safe Lock device is enabled on all the doors by quickly double-pushing the lock button on the key fob.

The direction indicators flash three times and the LED above the button flashes to indicate that the Safe Lock device has been activated. If one or more of the doors are not closed correctly, the Safe Lock device will not activate, preventing a person from getting stuck inside the passenger compartment by entering the car through, and then closing, the open door.

Deactivating The Safe Lock Device

The Safe Lock device deactivates automatically:

1. By pushing the unlock button on the key fob.
2. By turning the ignition key to the MAR position.

DOORS

Manual Lock

To lock each door from the inside, push the inside door handle toward the door until the red lock indicator is visible. To unlock the doors from the inside, pull the inside door handle to the first detent or until the lock symbol is no longer visible.

If the lock symbol is visible when the door is shut, the door will lock. Therefore, make sure the key fob is not inside the vehicle before closing the door.

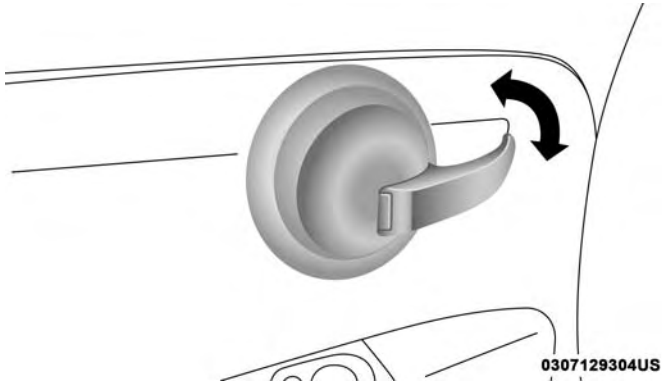

Manual Lock/Unlock Switch

NOTE: The manual lock knob unlocks each individual door separately.

WARNING!
• **When exiting the vehicle, always remove the key fob from the vehicle and lock your vehicle.**

(Continued)

DEP DEALER ePROCESS

WARNING! *(Continued)*

- **Never leave children alone in a vehicle, or with access to an unlocked vehicle.**
- **Allowing children to be in a vehicle unattended is dangerous for a number of reasons. A child or others could be seriously or fatally injured. Children should be warned not to touch the parking brake, brake pedal or the gear selector.**
- **Do not leave the key fob in or near the vehicle, or in a location accessible to children, and do not leave the ignition of a vehicle equipped with Keyless Enter-N-Go in the ON/RUN mode. A child could operate power windows, other controls, or move the vehicle.**
- **Do not leave children or animals inside parked vehicles in hot weather. Interior heat build-up may cause serious injury or death.**

CAUTION!

An unlocked car is an invitation. Always remove the key from the ignition and lock all doors when leaving the vehicle unattended.

Power Door Locks

A power door lock switch is incorporated into the driver door handle. Push or pull the handle to lock or unlock the doors and liftgate. If the driver's door handle is pushed, a red lock indicator will show on the driver's door handle (indicating locked). When the door is closed, the door will lock.

NOTE: To prevent the key from being locked in the vehicle, the doors will automatically unlock if the driver's door handle is pushed when the key is in the ignition.

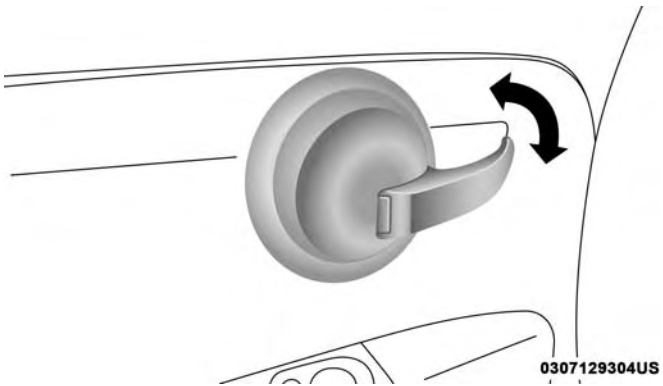

Power Door Lock Handle

DEP DEALER ePROCESS

Auto Door Locks

When enabled, the door locks will lock automatically when the vehicle's speed exceeds 12 mph (20 km/h).

NOTE: Use the Automatic Door Locks feature in accordance with local laws.

Refer to "Uconnect Settings" in "Multimedia" for further information.

SEATS

Seats are a part of the Occupant Restraint System of the vehicle.

WARNING!

- **It is dangerous to ride in a cargo area, inside or outside of a vehicle. In a collision, people riding in these areas are more likely to be seriously injured or killed.**
- **Do not allow people to ride in any area of your vehicle that is not equipped with seats and seat belts. In a collision, people riding in these areas are more likely to be seriously injured or killed.**

(Continued)

WARNING! ***(Continued)***

- **Be sure everyone in your vehicle is in a seat and using a seat belt properly.**

Manual Adjustment Front Seats

Forward/Rearward Adjustment

The adjusting bar is located at the front of the seats, near the floor.

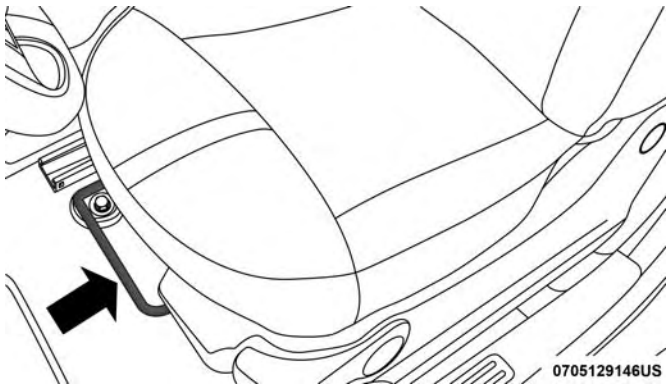

Adjusting Bar

DEP DEALER ePROCESS

While sitting in the seat, lift up on the bar and move the seat forward or rearward. Release the bar once the desired position is reached. Then, using body pressure, move forward and rearward on the seat to be sure that the seat adjusters have latched.

WARNING!

- **Adjusting a seat while driving may be dangerous. Moving a seat while driving could result in loss of control which could cause a collision and serious injury or death.**
- **Seats should be adjusted before fastening the seat belts and while the vehicle is parked. Serious injury or death could result from a poorly adjusted seat belt.**

Seat Height Adjustment

The driver's seat height can be raised or lowered by using a lever, located on the outboard side of the seat. Pump the lever upward to raise the seat height, or pump the lever downward to lower the seat height.

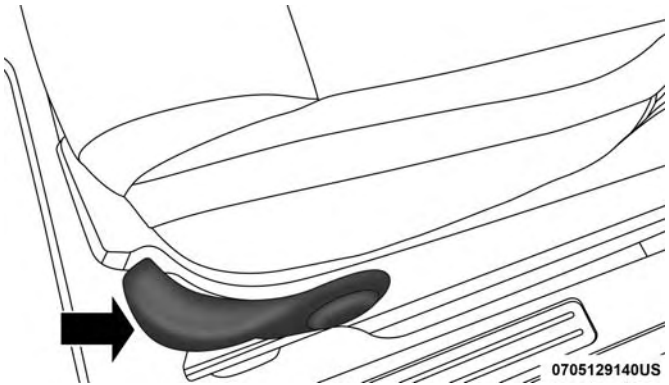

Height Adjuster

DEP
DEALER ePROCESS

Recline Adjustment

The recline adjustment lever is located on the inboard side of the seat. To recline the seatback, lift up the recline lever, lean back until the desired position has been reached, and release the lever.

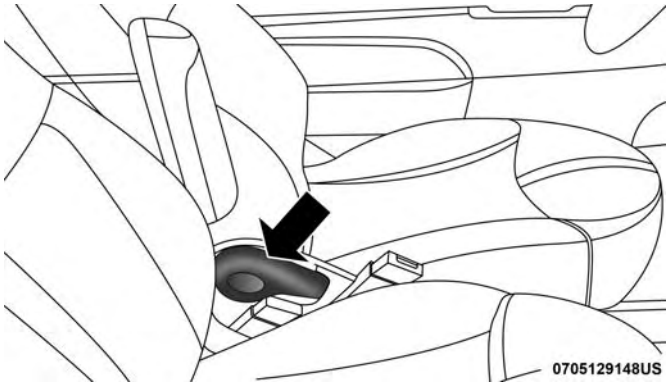

Recline Lever

WARNING!

Do not ride with the seatback reclined so that the shoulder belt is no longer resting against your chest. In a collision you could slide under the seat belt, which could result in serious injury or death.

EZ Entry Feature

The driver and front passenger seats have an EZ entry feature for rear seat passengers.

1. Pull forward on the release lever located on the outboard side of the seatback.
2. Dump the seatback forward.
3. Slide the seat forward to allow access in and out of the rear seat.

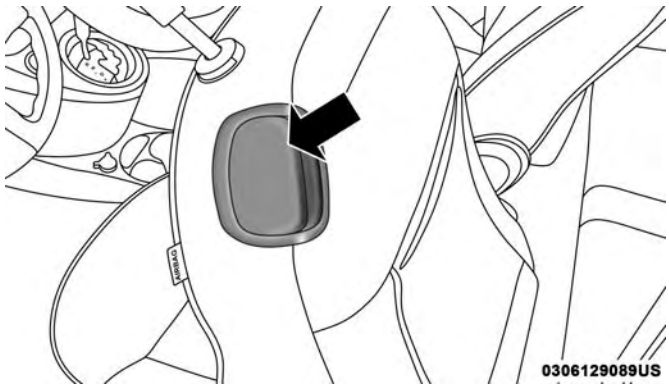

EZ Entry Lever

Lift the seatback upright and push the seat rearward to its locked position once the rear passengers are seated.

DEP DEALER ePROCESS

Memory Seat Feature

Both front seats have a memory feature, which can operate in two ways:

- Memory Function Option 1 (Full Seat Back And Track Fore/Aft Position Memory) — After using the EZ entry function, the seatback angle and the track fore/aft adjuster can both re-lock into the position they were most recently adjusted to. This is accomplished if the seat is moved fully rearward to its last fore/aft position on the tracks before the seat back is returned upright.
- Memory Function Option 2 (Seat Back Only Memory) — After using the EZ entry function, the seat back may first be returned upright prior to going back to the last fore/aft (memory) position on the tracks. This results in the seat back memory being set only – The track will then be locked forward of its last set fore/aft memory position. To then reset the fore/aft track memory feature (to reestablish Memory Function Option 1), the seat has to be returned fully rearward to its last fore/aft memory track position as described in Memory Function Option 1.

Heated Seats — If Equipped

On some models, the front driver and passenger seats may be equipped with heaters in both the seat cushions and seatbacks. The controls for the front heated seats are located on the center instrument panel area.

Push the switch once to turn on the heated seats. Push the switch a second time to shut the heating elements off.

NOTE: Once a heat setting is selected, heat will be felt within two to five minutes.

WARNING!

- **Persons who are unable to feel pain to the skin because of advanced age, chronic illness, diabetes, spinal cord injury, medication, alcohol use, exhaustion or other physical condition must exercise care when using the seat heater. It may cause burns even at low temperatures, especially if used for long periods of time.**

(Continued)

DEP DEALER ePROCESS

WARNING! *(Continued)*

- **Do not place anything on the seat or seatback that insulates against heat, such as a blanket or cushion. This may cause the seat heater to overheat. Sitting in a seat that has been overheated could cause serious burns due to the increased surface temperature of the seat.**

Manual Folding Rear Seat

The rear seatbacks have a fold down feature to allow increased cargo capacity.

Push down the release button, located at the outboard top of the seatback and move the seatback to its folded-down position to provide a flat load floor cargo area. When returning the seatback to its upright position, push rearward until the seatback is properly latched.

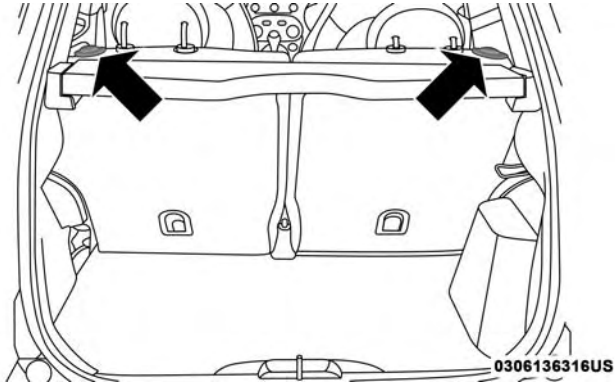

Rear Seat Release Buttons

DEP
DEALER ePROCESS

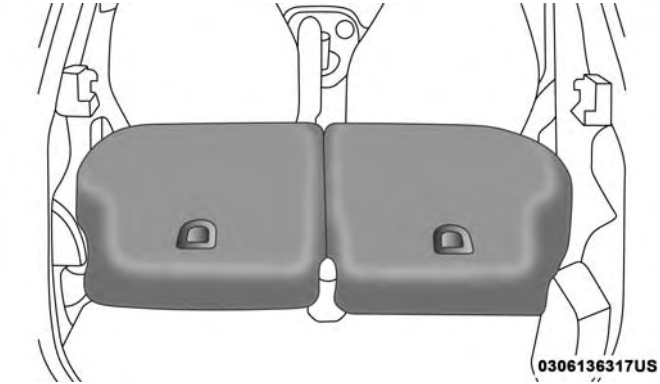

Folded Rear Seats

WARNING!

Do not pile luggage or cargo higher than the top of the seatback. This could impair visibility or become a dangerous projectile in a sudden stop or collision.

HEAD RESTRAINTS

Head restraints are designed to reduce the risk of injury by restricting head movement in the event of a rear impact. Head restraints should be adjusted so that the top of the head restraint is located above the top of your ear.

WARNING!

- **All occupants, including the driver, should not operate a vehicle or sit in a vehicle's seat until the head restraints are placed in their proper positions in order to minimize the risk of neck injury in the event of a crash.**
- **Head restraints should never be adjusted while the vehicle is in motion. Driving a vehicle with the head restraints improperly adjusted or removed could cause serious injury or death in the event of a collision.**

Reactive Head Restraints — Front Seats

The driver and front passenger seats are equipped with Reactive Head Restraints. In the event of a rear impact, the Reactive Head Restraints will automatically extend forward minimizing the gap between the back of the occupant's head and the Reactive Head Restraint.

DEP DEALER ePROCESS

To raise the head restraint, pull upward on the head restraint. To lower the head restraint, push the adjustment button, located at the base of the head restraint, and push downward on the head restraint.

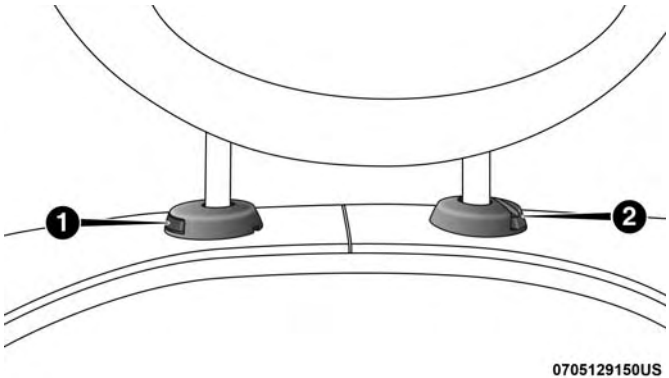

Head Restraint

1 — Release Button
2 — Adjustment Button

The Reactive Head Restraints will automatically return to their normal position following a rear impact. If the Reactive Head Restraints do not return to their normal position, see an authorized dealer immediately.

NOTE: The head restraints should only be removed by qualified technicians, for service purposes only. If either of the head restraints require removal, see an authorized dealer.

WARNING!

- **A loose head restraint thrown forward in a collision or hard stop could cause serious injury or death to occupants of the vehicle. Always securely stow removed head restraints in a location outside the occupant compartment.**
- **ALL the head restraints MUST be reinstalled in the vehicle to properly protect the occupants. Follow the re-installation instructions above prior to operating the vehicle or occupying a seat.**
- **Do not place items over the top of the Reactive Head Restraint, such as coats, seat covers or portable DVD players. These items may interfere with the operation of the Reactive Head Restraint in the event of a collision and could result in serious injury or death.**

DEP DEALER ePROCESS

Rear Head Restraints

To raise the head restraint, pull upward on the head restraint. To lower the head restraint, push the adjustment button, located at the base of the head restraint, and push downward on the head restraint. Refer to "Occupant Restraints" in "Safety" for information on tether routing.

NOTE: To remove the head restraint, raise it as far as it can go then push the release button and the adjustment button at the base of each post while pulling the head restraint up. To reinstall the head restraint, put the head restraint posts into the holes and push downward. Then adjust the head restraint to the appropriate height.

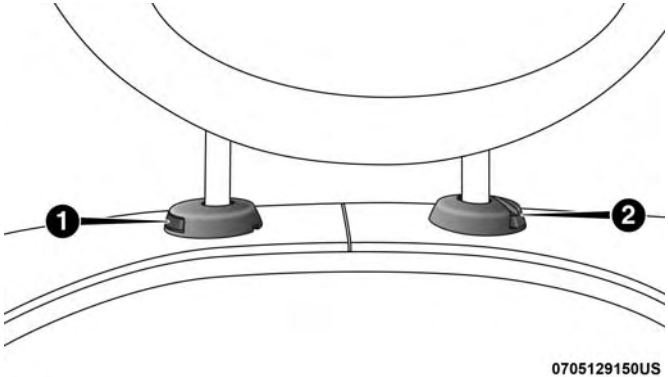

Head Restraint

1 — Release Button
2 — Adjustment Button

WARNING!

ALL the head restraints MUST be reinstalled in the vehicle to properly protect the occupants. Follow the re-installation instructions above prior to operating the vehicle or occupying a seat.

DEP DEALER ePROCESS

STEERING WHEEL

Tilt Steering Column — If Equipped

This feature allows you to tilt the steering column upward or downward. The tilt control lever is located on the left-side of the steering column, below the turn signal controls.

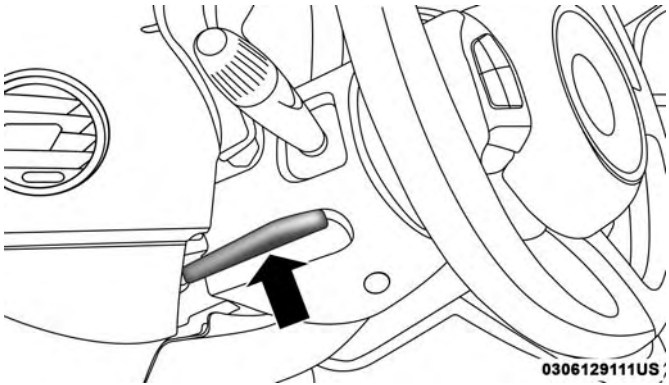

Tilt Control Lever

Push down on the lever to unlock the column. With one hand firmly on the steering wheel, move the steering column up or down as desired. Push the lever up to lock the column firmly in place.

WARNING!

Do not adjust the steering column while driving. Adjusting the steering column while driving or driving with the steering column unlocked, could cause the driver to lose control of the vehicle. Failure to follow this warning may result in serious injury or death.

MIRRORS

Inside Day/Night Mirror

The mirror can be adjusted up, down, left, and right for various drivers. The mirror should be adjusted to center on the view through the rear window.

Headlight glare from vehicles behind you can be reduced by moving the small control under the mirror to the night position (toward the rear of the vehicle). The mirror should be adjusted while set in the day position (toward the windshield).

DEP DEALER ePROCESS

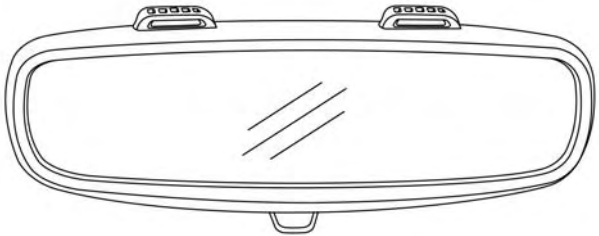

0705129137US

Adjusting Rearview Mirror

Automatic Dimming Mirror — If Equipped

This mirror automatically adjusts for headlight glare from vehicles behind you. You can turn the feature on or off by pushing the button at the base of the mirror. The on/off symbol on the button will illuminate when the auto-dimming feature is enabled.

NOTE: This feature is disabled when the vehicle is moving in REVERSE.

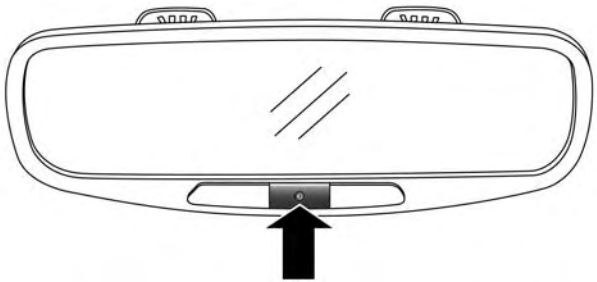

0705129135US

Automatic Dimming Mirror Power Button

CAUTION!

To avoid damage to the mirror during cleaning, never spray any cleaning solution directly onto the mirror. Apply the solution onto a clean cloth and wipe the mirror clean.

DEP DEALER ePROCESS

Power Mirrors

The power mirror controls are located on the driver's door trim panel.

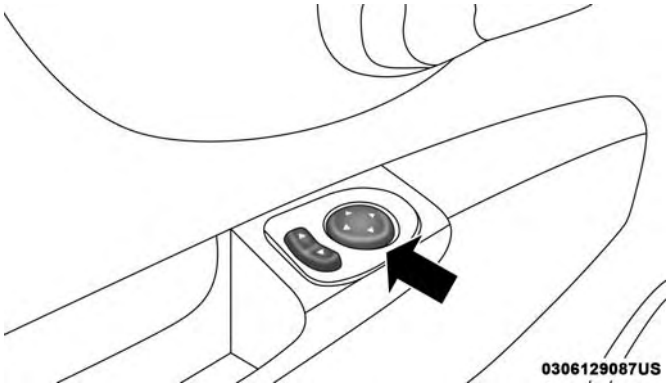

Power Mirror Switches

The power mirror controls consist of a mirror select switch and a four-way mirror control switch. To adjust a mirror, push the mirror select switch to either the L (left) or R (right) to select the mirror you need to adjust.

Using the mirror control switch, push on any of the four arrows for the direction that you want the mirror to move.

WARNING!

Vehicles and other objects seen in the passenger side convex mirror will look smaller and farther away than they really are. Relying too much on your passenger side convex mirror could cause you to collide with another vehicle or other object. Use your inside mirror when judging the size or distance of a vehicle seen in the passenger side convex mirror.

Folding Mirrors

The exterior mirrors are hinged to allow the mirror to pivot forward or rearward to help avoid damage. The mirror has three detent positions: full forward, normal and full rearward.

DEP DEALER ePROCESS

Spotter Mirror — If Equipped

Some models are equipped with a driver's side spotter mirror. The spotter mirror allows for a greater range of visibility on the driver's side of the vehicle.

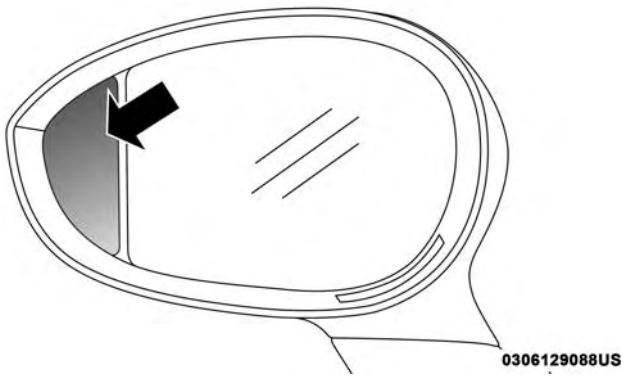

Spotter Mirror

Heated Mirrors — If Equipped

These mirrors are heated to melt frost or ice. This feature will be activated whenever you turn on the rear window defroster (if equipped). Refer to "Climate Controls" in "Getting To Know Your Vehicle" for further information.

EXTERIOR LIGHTS

Multifunction Lever

The multifunction lever, located on the left side of the steering wheel, controls the operation of the headlights, headlight beam selection, passing light and turn signals.

NOTE: The headlights can only be turned on with the ignition in the ON/RUN position.

DEP DEALER ePROCESS

Headlights

Rotate the end of the multifunction lever upward to the first detent for headlight operation.

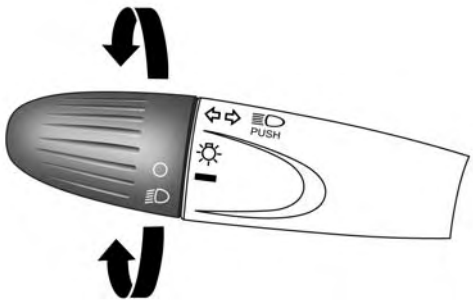

0306129104US

Headlight Operation

NOTE: When the headlights are turned on, the Daytime Running Lights will be deactivated.

Daytime Running Lights

To activate the Daytime Running Lights (DRL), rotate the end of the multifunction lever to the **O** symbol.

NOTE: The low beams and side/taillights will not be on with DRL.

If allowed by law in the country in which the vehicle was purchased the DRL function can be turned on or off using the display menus. Refer to "Uconnect Settings" in "Multimedia" for further information.

High Beams

With the low beams activated, push the multifunction lever towards the instrument panel to turn on the high beams. Pull the multifunction lever toward the steering wheel to turn off the high beams.

Flash-To-Pass

You can signal another vehicle with your headlights by partially pulling the multifunction lever toward the steering wheel. This will cause the high beam headlights to turn on until the lever is released.

DEP
DEALER ePROCESS

Parking Lights

To turn on the parking lights, remove the key or turn the ignition to OFF/LOCK position and turn on the headlights.

Follow Me Home/Headlight Delay

When this feature is selected, the driver can choose to have the headlights remain on for a preset period of time.

Activation

Remove the key or turn the ignition to the STOP (OFF/LOCK) position, and pull the multifunction lever toward the steering wheel within two minutes. Each time the lever is pulled, the activation of the lights will be extended by 30 seconds. The activation of the lights can be extended to a maximum of 210 seconds.

Deactivation

Pull the multifunction lever toward the steering wheel and hold it for more than two seconds.

Fog Lights — If Equipped

The fog light switch is located on the center stack of the instrument panel, just below the radio.

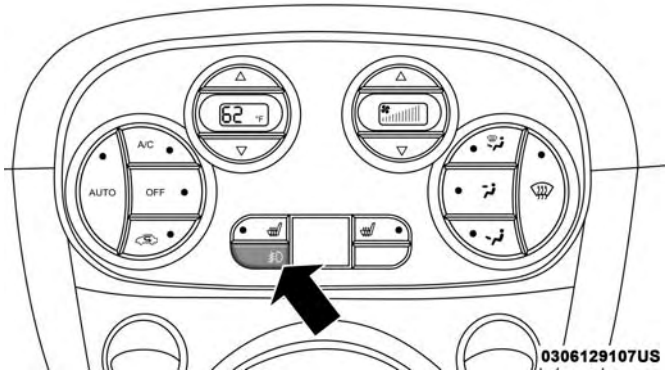

Fog Light Switch

Push the switch once to turn the front fog lights on. Push the switch a second time to turn the front fog lights off.

DEP DEALER ePROCESS

Turn Signals

Push the multifunction lever upward to signal a right turn or downward to signal a left turn. The corresponding indicator in the instrument cluster display will blink to indicate the operation of the turn signal.

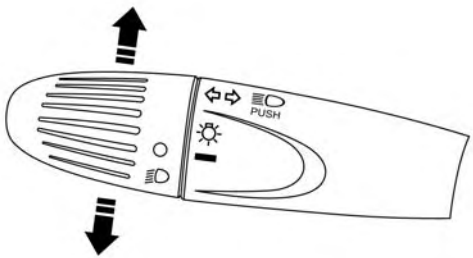

0306129106US

Turn Signal Operation

NOTE: The indicators will automatically turn off when the turn has been completed and the steering wheel is returned to a straight position.

Lane Change Assist

Tap the lever up or down once, without moving beyond the detent, and the turn signal (right or left) will flash three times. Then, the turn signal (right or left) will automatically turn off.

INTERIOR LIGHTS

The interior light switches are located in the overhead console. The interior lights can be set to three different positions (Off/Left Position, Center Position, On/Right Position).

Using the switch on the left overhead, push the switch to the right from its center position and the lights are always on. Push the switch to the left from its center position and the lights are always off. Leave the switch in the center position, and the lights are turned on and off when the doors are opened or closed. The switch on the right side of the overhead console controls the map or reading function of the lights. Push the switch to the right to turn on the right light and push the switch to the left to turn on the left light.

DEP
DEALER ePROCESS

CAUTION!

Before getting out of the vehicle be sure that the switch is in the center position or that the lights are off to avoid draining the battery.

Interior Light Timing (Center Position)

There are four different modes of operation that can be activated in this position:

- When one door is opened, a three minute timer is activated.
- When the key is removed from the ignition (within two minutes of the ignition being turned OFF), a 10 second timer is activated.
- When the doors are unlocked with the key fob, a 10 second timer is activated.
- When the doors are locked with the key fob, the lights will turn off.

Interior Light Timing (On/Right Position)

When all doors are closed a 15-minute timer is activated.

NOTE: The timer is deactivated when the key is moved into the ON/RUN position.

Cargo Area Lights

There is also a courtesy light located in the rear cargo area. Whenever the rear lift gate is opened, the light will turn on and then turn off when the lift gate is closed.

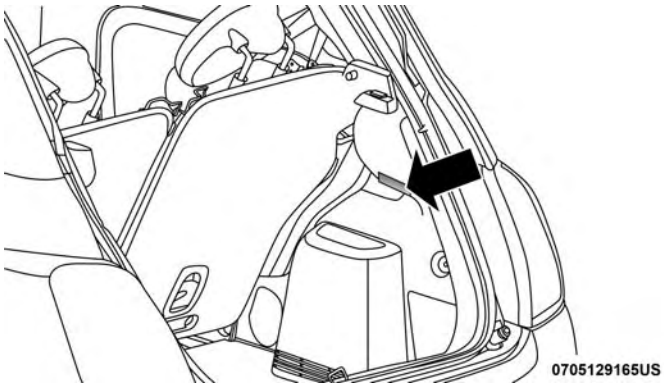

Cargo Light Location

DEP
DEALER ePROCESS

WIPERS AND WASHERS

The windshield wiper/washer lever is located on the right side of the steering column.

NOTE: The windshield wipers/washers will only operate with the ignition in the ON/RUN position.

Front Windshield Wiper Operation

There are four different modes of operation for the front windshield wipers. The windshield wiper lever can be raised or lowered to access these modes:

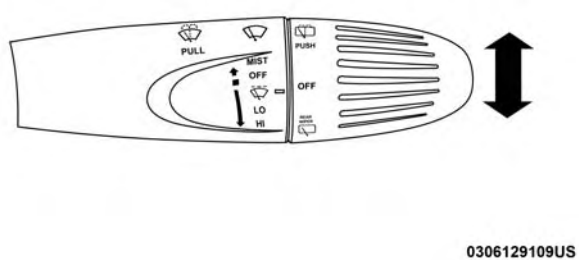

Windshield Wiper Operation

Low Speed

Push the lever downward to the second detent. The wipers will operate at low speed.

High Speed

Push the lever downward to the third detent. The wipers will operate at high speed.

Windshield Wiper Off

This is the normal position of the wiper lever.

Intermittent Wiper Operation

Push the lever downward to the first detent. The wipers will operate intermittently.

NOTE: The Intermittent function only has one detent, but wiper delay will vary with changes in vehicle speed. As vehicle speed increases, the delay time will decrease.

Front Windshield Washer Operation

Pull the windshield wiper/washer lever toward the steering wheel to activate the washers. The wipers will activate automatically for three cycles after the lever is released.

DEP
DEALER ePROCESS

CAUTION!

- **Turn the windshield wipers off when driving through an automatic car wash. Damage to the windshield wipers may result if the wiper control is left in any position other than off.**
- **In cold weather, always turn off the wiper switch and allow the wipers to return to the park position before turning off the engine. If the wiper switch is left on and the wipers freeze to the windshield, damage to the wiper motor may occur when the vehicle is restarted.**
- **Always remove any buildup of snow that prevents the windshield wiper blades from returning to the off position. If the windshield wiper control is turned off and the blades cannot return to the off position, damage to the wiper motor may occur.**

Manual High Speed/Mist

Push the lever upward from the off position. The wipers will operate at high speed to clear off road mist or spray from a passing vehicle. This operation will continue until the lever is released. When the lever is released, the wipers will return to the off position and automatically shut off.

Rear Windshield Wiper

Rotate the end of the windshield wiper/washer lever upward to the first detent past the intermittent settings for intermittent wipe operation. With the front windshield wiper active, rotate the end of the windshield wiper/washer lever upward. The rear wiper will operate in the same mode as the front windshield wipers, but at half the frequency. When the transmission is shifted into REVERSE, the rear wiper will automatically operate at low speed and return to normal operation when the transmission is shifted out of REVERSE.

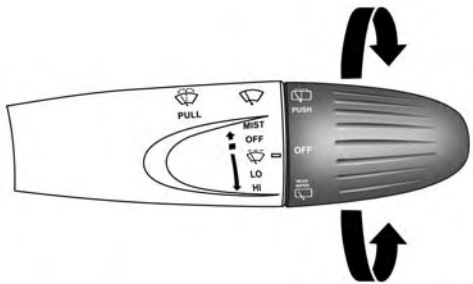

0306129110US

Rear Wiper Operation

NOTE: The windshield wipers/washers will only operate with the ignition in the ON/RUN position.

DEALER ePROCESS

Rear Windshield Washer Operation

Push the windshield wiper/washer lever toward the instrument panel to activate the rear washer. Push and hold the lever for more than a half second and the wipers will activate automatically for three cycles after the lever is released.

CLIMATE CONTROLS

The Climate Control System allows you to regulate the temperature, air flow, and direction of air circulating throughout the vehicle. The controls are located on the touchscreen (if equipped) and on the instrument panel below the radio.

Manual Climate Control Overview

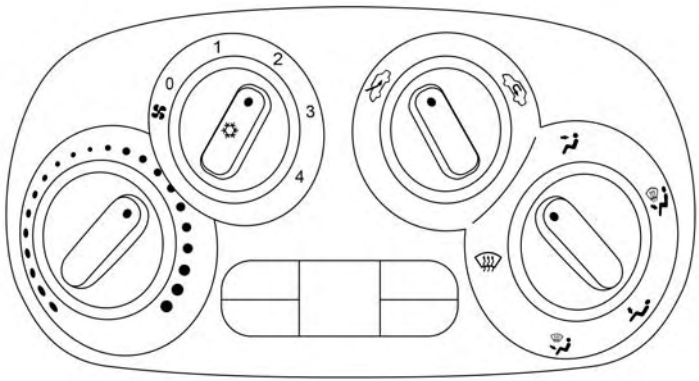

0313129355US

Manual Climate Control

DEP
DEALER ePROCESS

Manual Climate Control Descriptions

Icon	Description
	A/C Button Push the A/C button to engage the Air Conditioning (A/C). A LED will illuminate when the A/C system is engaged.
	Recirculation Setting Rotate this control to change the system between recirculation mode and outside air mode. Recirculation can be used when outside air conditions such as smoke, odors, dust, or high humidity are present. Recirculation can be used in all modes except for Defrost. Recirculation may be unavailable if conditions exist that could create fogging on the inside of the windshield. The A/C can be deselected manually without disturbing the mode control selection. Continuous use of the Recirculation mode may make the inside air stuffy and window fogging may occur. Extended use of this mode is not recommended.
	Temperature Control Use this control to regulate the temperature of the air inside the interior cabin. Rotating the knob counterclockwise, from top center into the blue area of the scale, indicates cooler temperatures. Rotating the knob clockwise, into the red area, indicates warmer temperatures.
	Blower Control There are seven blower speeds. Use this control to regulate the amount of air forced through the system in any mode you select. The blower speed increases as you move the control clockwise from the OFF position. **NOTE:** Depending on the configuration, your vehicle may be equipped with four blower speeds.

DEP DEALER ePROCESS

Icon	Description
Modes Control: Turn the knob clockwise or counterclockwise to change the airflow distribution mode. The airflow distribution mode can be adjusted so air comes from the instrument panel outlets, floor outlets, defrost outlets and demist outlets. The Mode settings are as follows:	
Panel Mode	**Panel Mode** Air comes from the outlets in the instrument panel. Each of these outlets can be individually adjusted to direct the flow of air. The air vanes of the center outlets and outboard outlets can be moved up and down or side to side to regulate airflow direction. There is a shut off wheel located below the air vanes to shut off or adjust the amount of airflow from these outlets.
Bi-Level Mode	**Bi-Level Mode** Air comes from the instrument panel outlets and floor outlets. A slight amount of air is directed through the defrost and side window demister outlets. **NOTE:** Bi-Level mode is designed under comfort conditions to provide cooler air out of the panel outlets and warmer air from the floor outlets.
Floor Mode	**Floor Mode** Air comes from the floor outlets. A slight amount of air is directed through the defrost and side window demister outlets.

DEP DEALER ePROCESS

Icon	Description
Mix Mode	**Mix Mode** Air is directed through the floor, defrost, and side window demister outlets. This setting works best in cold or snowy conditions that require extra heat to the windshield. This setting is good for maintaining comfort while reducing moisture on the windshield.
Front Defrost Mode FRONT	**Front Defrost Mode** Turn the knob clockwise to change the current airflow setting to Defrost mode. Air comes from the windshield and side window demist outlets. When the defrost button is selected, the blower level increases. Use Defrost mode with maximum temperature settings for best windshield and side window defrosting and defogging.
Rear Defrost Button	**Rear Defrost Button** Push and release the Rear Defrost Control button to turn on the rear window defroster and the heated outside mirrors (if equipped). An indicator illuminates when the rear window defroster is on. The rear window defroster automatically turns off after a short period of time.

DEP
DEALER ePROCESS

Automatic Temperature Control Overview

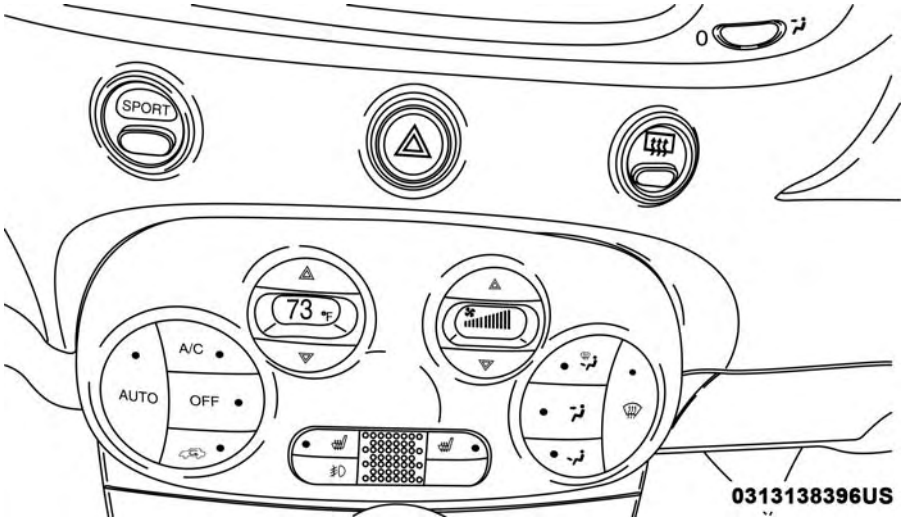

Automatic Temperature Controls

DEP
DEALER ePROCESS

Control Descriptions

Icon	Description
A/C	**A/C Button** Push and release to change the current setting, the indicator illuminates when A/C is ON. Performing this function again will cause the A/C operation to switch into manual mode and the A/C indicator will turn off.
	Recirculation Button Push and release this button to change the system between recirculation mode and outside air mode. Recirculation can be used when outside conditions, such as smoke, odors, dust, or high humidity are present. Recirculation can be used in all modes. Recirculation may be unavailable if conditions exist that could create fogging on the inside of the windshield. The A/C can be deselected manually without disturbing the mode control selection. Continuous use of the Recirculation mode may make the inside air stuffy and window fogging may occur. Extended use of this mode is not recommended.
AUTO	**AUTO Button** Automatically controls the interior cabin temperature by adjusting airflow distribution and amount. Performing this function will cause the system to switch between manual mode and automatic modes. Refer to “Automatic Operation” in this section for more information.

DEP
DEALER ePROCESS

Icon	Description
FRONT	**Front Defrost Button** Push and release to change the current airflow setting to Defrost mode. The indicator illuminates when this feature is ON. Air comes from the windshield and side window demist outlets. When the defrost button is selected, the blower level will increase. Use Defrost mode with maximum temperature settings for best windshield and side window defrosting and defogging. Performing this function will cause the ATC to switch into manual mode. If the front defrost mode is turned off then the climate system returns the previous setting.
Rear Defrost Button	**Rear Defrost Button — If Equipped** Push and release the Rear Defrost Control button to turn on the rear window defroster and the heated outside mirrors (if equipped). An indicator illuminates when the rear window defroster is on. The rear window defroster automatically turns off after a short period of time.
	Blower Control Up And Down Buttons Provides the occupants with blower control. Push the UP button to increase blower speed. Push the DOWN button to decrease blower speed.

DEP DEALER ePROCESS

Icon	Description
Modes Control: Push the button in the center of the knob to change the airflow distribution mode. The airflow distribution mode can be adjusted so air comes from the instrument panel outlets, floor outlets, defrost outlets and demist outlets. The Mode settings are as follows:	
Panel Mode	**Panel Mode** Air comes from the outlets in the instrument panel. Each of these outlets can be individually adjusted to direct the flow of air. The air vanes of the center outlets and outboard outlets can be moved up and down or side to side to regulate airflow direction. There is a shut off wheel located below the air vanes to shut off or adjust the amount of airflow from these outlets.
Floor Mode	**Floor Mode** Air comes from the floor outlets. A slight amount of air is directed through the defrost and side window demister outlets.
Bi-Level Mode	**Bi-Level Mode** Air comes from the instrument panel outlets and floor outlets. A slight amount of air is directed through the defrost and side window demister outlets. To access this mode, press both the Panel and Floor Mode buttons. **NOTE:** Bi-Level mode is designed under comfort conditions to provide cooler air out of the panel outlets and warmer air from the floor outlets.

DEP DEALER ePROCESS

Icon	Description
Mix Mode	**Mix Mode** Air is directed through the floor, defrost, and side window demister outlets. This setting works best in cold or snowy conditions that require extra heat to the windshield. This setting is good for maintaining comfort while reducing moisture on the windshield.
OFF	**Climate Control Off Button** Push and release this button to turn the Climate Control on/off.
	Temperature Up And Down Button Provides the occupants with temperature control. Push the Up button for warmer temperature settings. Push the Down button for cooler temperature settings.

DEP DEALER ePROCESS

Climate Control Functions

A/C (Air Conditioning)

The Air Conditioning (A/C) button allows the operator to manually activate or deactivate the air conditioning system. When the air conditioning system is turned on, cool dehumidified air will flow through the outlets into the cabin. For improved fuel economy, push the A/C button to turn off the air conditioning and manually adjust the blower and airflow mode settings. Also, make sure to select only Panel, Bi-Level or Floor modes.

NOTE:

- For Manual Climate Controls, if the system is in Mix, Floor or Defrost Mode, the A/C can be turned off, but the A/C system shall remain active to prevent fogging of the windows.
- If fog or mist appears on the windshield or side glass, select Defrost mode, and increase blower speed if needed.
- If your air conditioning performance seems lower than expected, check the front of the A/C condenser (located in front of the radiator), for an accumulation of dirt or insects. Clean with a gentle water spray from the front of the radiator and through the condenser.

Recirculation

In cold weather, use of Recirculation mode may lead to excessive window fogging. The Recirculation feature may be unavailable if conditions exist that could create fogging on the inside of the windshield.

On systems with Manual Climate Controls, if equipped, the Recirculation mode is not allowed in Defrost mode to improve window clearing operation. Recirculation is disabled automatically if this mode is selected. Attempting to use Recirculation while in this mode causes the LED in the control button to blink and then turns off.

Automatic Temperature Control (ATC) — If Equipped

Automatic Operation

1. Push the AUTO button on the faceplate.
2. Next, adjust the temperature you would like the system to maintain by adjusting the temperature control buttons. Once the desired temperature is displayed, the system achieves and automatically maintains that comfort level.

DEP DEALER ePROCESS

3. When the system is set up for your comfort level, it is not necessary to change the settings. You experience the greatest efficiency by simply allowing the system to function automatically.

NOTE:

- It is not necessary to move the temperature settings for cold or hot vehicles. The system automatically adjusts the temperature, mode, and blower speed to provide comfort as quickly as possible.
- The temperature can be displayed in U.S. or Metric units by selecting the US/Metric customer-programmable feature.

To provide you with maximum comfort in the Automatic mode during cold start-ups, the blower fan remains on low until the engine warms up. The blower increases in speed and transition into Auto mode.

Manual Operation Override

This system offers a full complement of manual override features. The AUTO symbol in the front ATC display will be turned off when the system is being used in the manual mode.

NOTE: The system will not automatically sense the presence of fog, mist or ice on the windshield. Defrost mode must be manually selected to clear the windshield and side glass.

Operating Tips

NOTE: Refer to the chart at the end of this section for suggested control settings for various weather conditions.

Summer Operation

The engine cooling system must be protected with a high-quality antifreeze coolant to provide proper corrosion protection and to protect against engine overheating. OAT coolant (conforming to MS.90032) is recommended.

Winter Operation

To ensure the best possible heater and defroster performance, make sure the engine cooling system is functioning properly and the proper amount, type, and concentration of coolant is used. Use of the Air Recirculation mode during Winter months is not recommended, because it may cause window fogging.

DEP
DEALER ePROCESS

Vacation/Storage

Before you store your vehicle, or keep it out of service (i.e., vacation) for two weeks or more, run the air conditioning system at idle for about five minutes, in fresh air with the blower setting on high. This will ensure adequate system lubrication to minimize the possibility of compressor damage when the system is started again.

Window Fogging

Vehicle windows tend to fog on the inside in mild, rainy and/or humid weather. To clear the windows, select Defrost or Mix mode and increase the front blower speed. Do not use the Recirculation mode without A/C for long periods, as fogging may occur.

CAUTION!

Failure to follow these cautions can cause damage to the heating elements:

- **Use care when washing the inside of the rear window. Do not use abrasive window cleaners on the interior surface of the window. Use a soft cloth and a**

(Continued)

CAUTION! *(Continued)*

mild washing solution, wiping parallel to the heating elements. Labels can be peeled off after soaking with warm water.

- **Do not use scrapers, sharp instruments, or abrasive window cleaners on the interior surface of the window.**
- **Keep all objects a safe distance from the window.**

Outside Air Intake

Make sure the air intake, located directly in front of the windshield, is free of obstructions such as leaves. Leaves collected in the air intake may reduce airflow, and if they enter the plenum, they could plug the water drains. In winter months, make sure the air intake is clear of ice, slush, and snow.

A/C Air Filter

The climate control system filters out dust and pollen from the air. Contact an authorized dealer to service your A/C air filter, and to have it replaced when needed.

DEP DEALER ePROCESS

Operating Tips Chart

WEATHER	CONTROL SETTINGS
Hot weather and vehicle interior is very hot	Set the mode control to , on, and blower on high. Roll down the windows for a minute to flush out the hot air. Once comfort is achieved adjust controls for comfort.
Warm weather	Turn on and set the mode control to the position.
Cool Sunny	Operate in position.
Cool & Humid conditions	Set the mode control to and turn on to keep windows clear.
Cold Weather	Set the mode control to the position. If windshield fogging starts to occur, move the control towards the position.

8000cb71

WINDOWS

Power Window Controls

The power window controls are located on the shifter bezel, below the climate controls, which operate the driver and passenger door windows. The window controls will operate when the ignition switch is in the MAR (ACC/ON/RUN) position.

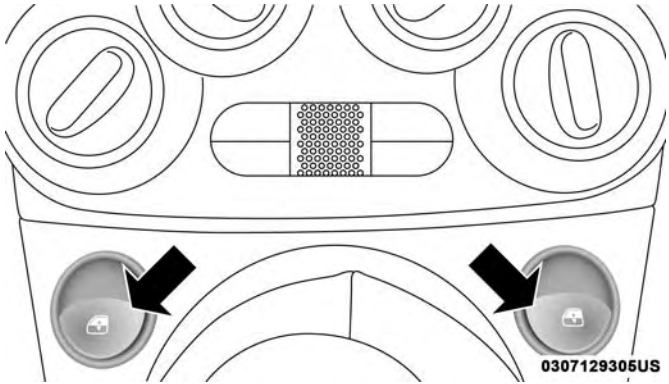

Power Window Switches

DEP
DEALER ePROCESS

WARNING!

Never leave children unattended in a vehicle, and do not let children play with power windows. Do not leave the key fob in or near the vehicle, or in a location accessible to children. Occupants, particularly unattended children, can become entrapped by the windows while operating the power window switches. Such entrapment may result in serious injury or death.

Auto-Down

The window switches have an Auto-Down feature. Push the window switch for approximately one second, release, and the window will go down automatically. To cancel the Auto-Down movement, operate the switch in either the up or down direction and release the switch. To open the window part way, pull the window switch briefly, and release the switch when the window is in the desired position.

Wind Buffeting

Wind buffeting can be described as the perception of pressure on the ears or a helicopter-type sound in the ears. Your vehicle may exhibit wind buffeting with the windows down, or the sunroof (if equipped) in certain open or partially open positions. This is a normal occurrence and can be minimized. If the buffeting occurs with the rear windows open, open the front and rear windows together to minimize the buffeting. If the buffeting occurs with the sunroof open, adjust the sunroof opening to minimize the buffeting or open any window.

POWER SUNROOF — IF EQUIPPED

The power sunroof switch is located in the overhead console.

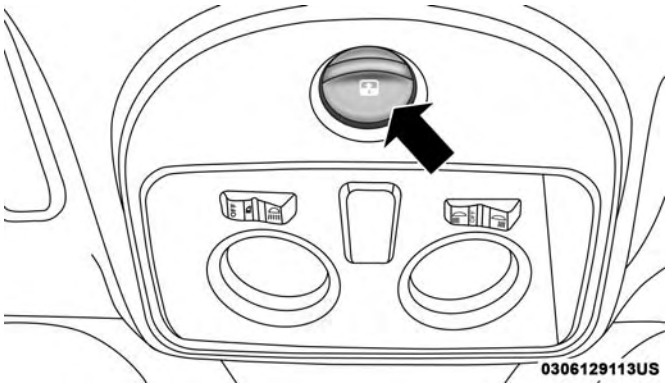

Power Sunroof Switch

DEP
DEALER ePROCESS

WARNING!

- **Never leave children alone in a vehicle, or with access to an unlocked vehicle. Never leave the key fob in or near the vehicle or in a location accessible to children. Occupants, particularly unattended children, can become entrapped by the power sunroof while operating the power sunroof switch. Such entrapment may result in serious injury or death.**
- **In a collision, there is greater risk of being thrown from a vehicle with an open sunroof. You could also be seriously injured or killed. Always fasten your seat belt properly and make sure all passengers are properly secured too.**
- **Do not allow small children to operate the sunroof. Never allow your fingers, other body parts, or any object to project through the sunroof opening. Injury may result.**

To Open

Push and hold the power sunroof switch rearward for approximately one second and the sunroof will stop at the vented position. Push the switch a second time and hold for approximately one second and release, the sunroof will open fully, then stop automatically. This is called "Express Open". During Express Open operation, any movement of the sunroof switch will stop the sunroof.

To Close

With the sunroof in the full open position, pull the power sunroof button and hold it for approximately one second, the sunroof will return to the vented position. Pull the switch a second time and hold for approximately one second to completely close the sunroof.

Wind Buffeting

Wind buffeting can be described as the perception of pressure on the ears or a helicopter-type sound in the ears. Your vehicle may exhibit wind buffeting with the windows down, or the sunroof (if equipped) in certain open or partially open positions. This is a normal occurrence and can be minimized. If the buffeting occurs with the rear windows open, open the front and rear windows together to minimize the buffeting. If the buffeting occurs with the sunroof open, adjust the sunroof opening to minimize the buffeting or open any window.

DEP
DEALER ePROCESS

Sun Shade — If Equipped

For vehicles equipped with either a power sunroof or a fixed glass roof, there is a sun shade that can be open or closed. To open the sun shade, push the tab and move the shade to a full open position.

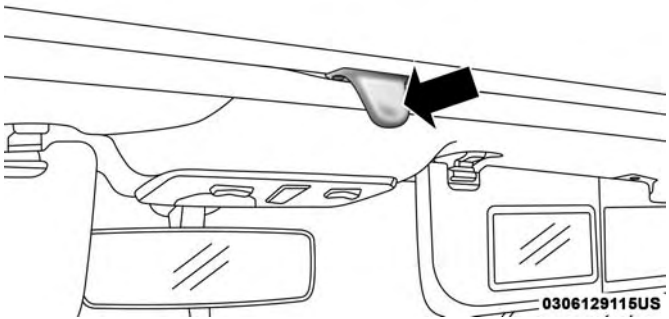

Manual Sun Shade

Pinch Protect Feature

This feature will detect an obstruction in the opening of the sunroof during Express Close operation. If an obstruction in the path of the sunroof is detected, the sunroof will automatically retract. Remove the obstruction if this occurs. Next, push the switch forward and release to Express Close.

Emergency Operation

In case of electrical failure, the sunroof can be operated with the hex wrench that is located in the glove compartment. There is a plug located in the rear of the sunroof opening at the center of the vehicle. Removing the plug reveals a hex opening in the motor assembly of the sunroof. Insert the hex wrench and turn, moving the sunroof to the desired location.

POWER CONVERTIBLE TOP — IF EQUIPPED

On vehicles equipped with a power convertible top, the power convertible top switch is located on the overhead console. The switch contains two buttons. The passenger side button is used to open the power top, and the driver side button is used to close the power top.

DEP DEALER ePROCESS

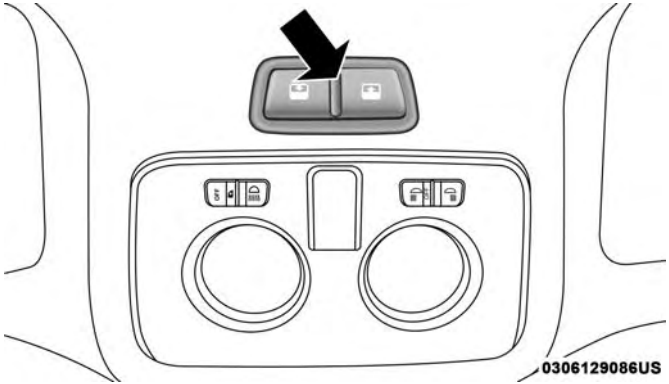

Power Convertible Top Switch

NOTE:

- The power top buttons will operate when the ignition switch is turned to the MAR (ACC/ON/RUN) position.
- The power top can be remotely operated with the key fob. Refer to "Opening Power Top Remote Function" in "Getting To Know Your Vehicle" for more information.
- The soft top cannot be lowered in temperatures lower than –22°F (-30°C) but it can be closed at temperatures as low as –4° F (-20°C).
- The highest temperature that the convertible top is operational is at 176°F (80°C).

Lowering The Power Top

Auto Open

Push the top open button approximately one second for the three-quarter open/spoiler position. Push the top open button for approximately one second a second time to fully open the convertible top.

Manual Open

For manual open, push and hold the open button until desired roof position or until spoiler position.

NOTE:

- Vertical movement only operates in auto open/close mode.
- If you are traveling at speeds above 50 mph (80 km/h) and wish to open the top, it will open to only three-quarter of the way.

Raising The Power Top

Auto Close

From the convertible top fully open position, push the top close button for approximately one second for the three-quarter open/spoiler position. Push the top close button

DEP DEALER ePROCESS

for approximately one second a second time for the one-quarter open position. Push and hold close button to fully close convertible top.

Manual Close

For manual close, push and hold the close button until desired position until one-quarter open position. Push and hold again for full close position.

NOTE:

- If the top is three-quarter of the way open, you can close the top if vehicle speeds are above 50 mph (80 km/h).
- If the top is fully open and the vehicle is traveling at 50 mph (80 km/h) or above, it will not allow you to close the top.

NOTE: Rail lubrication is recommended every 2,000 cycles, or if scratching noises due to dust are present. Refer to "Fluids And Lubricants" in "Technical Specifications" for information.

WARNING!

The convertible top does not provide the structural protection that a reinforced metal roof does and the

(Continued)

WARNING! *(Continued)*

fabric top cannot be expected to prevent the ejection of the occupants in a collision. Therefore, it is important that all occupants wear their seat belts at all times. Death or serious injuries could occur if you are ejected from the vehicle during a collision.

CAUTION!

Failure to follow these cautions may cause interior water damage, stains or mildew on the top material:

- **Avoid high-pressure car washes, as they can damage the top material. Also, increased water pressure may force water past the weather strips.**
- **Remove any standing water from the top and dry the surface before opening it. Operating the top, opening a door or lowering a window while the top is wet may allow water to drip into the vehicle's interior.**
- **Use care when washing the vehicle, water pressure directed at the weather strip seals may cause water to leak into the vehicle's interior.**

DEP DEALER ePROCESS

Power Convertible Top Relearn Procedure

If your power convertible top does not operate in the Auto Opening/Closing mode (automatically opening/closing to the one-quarter open and three-quarter open comfort stops), or if the remote keyless power top function is inoperable, or if the trunk lid does not open - the following relearn procedure may be necessary.

1. Confirm that the door/trunk lid are closed.
2. Begin with the top in the fully closed position (using manual mode).
3. Hold the open button to move the top to the fully open position.
4. Continue to hold the open button for an additional 30 seconds.
5. Release the open button.
6. Hold the closed button to move the top to the fully closed position.
7. Continue to hold the closed button until the top begins to cycle fully open, then release the closed button.

At the end of step 7 the top will automatically cycle to the fully open position, and then close to the one-quarter open position.

This will confirm that the relearn procedure was successful.

Auto open/close will now be functional, as well as trunk lid operation, and remote keyless power top function.

NOTE: DO NOT interrupt this activity.

If the power convertible top does not relearn, repeat the procedure a second time.

Wind Stop

The Wind Stop installs in the backseat area of the vehicle. The Wind Stop will not interfere with power top operation. Therefore, it can remain installed when the top is up.

DEP
DEALER ePROCESS

HOOD

Opening

To open the hood, two latches must be released.

1. Pull the bottom of the RED hood release lever, located on the left kick panel, rearward.

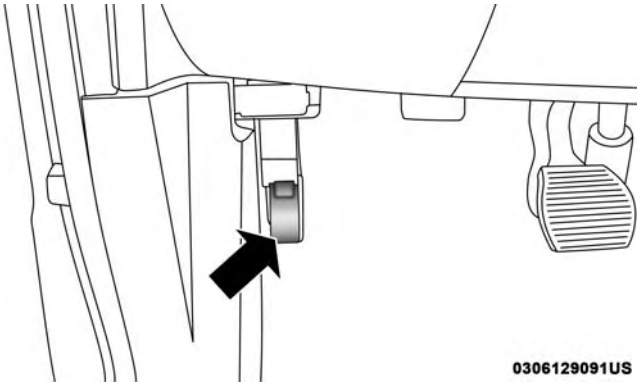

Hood Release Lever

2. Rotate the safety catch under the front edge of the hood, near the center, and raise the hood.

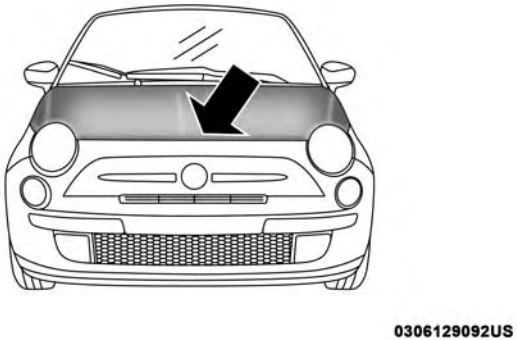

Hood Safety Latch Location

DEP DEALER ePROCESS

3. Lift the hood prop rod that clips to the right side (left side when standing in front of the hood) of the engine compartment. Place the hood prop rod in the hole of hood hinge to secure the hood in the open position.

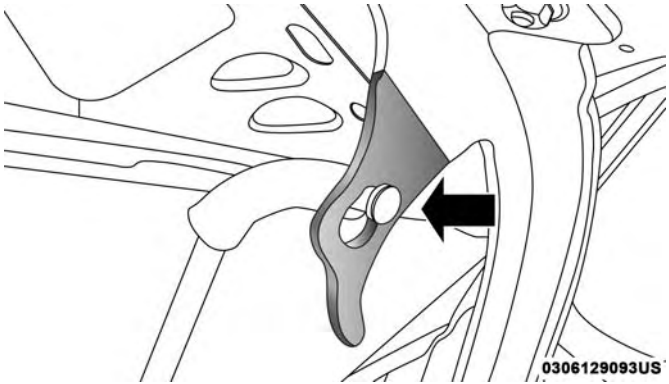

Hood Prop Rod

In hot climates, the prop rod may be hot. Pick up the prop rod at the foam on the end of the prop rod.

Closing

WARNING!

Be sure the hood is fully latched before driving your vehicle. If the hood is not fully latched, it could open when the vehicle is in motion and block your vision. Failure to follow this warning could result in serious injury or death.

CAUTION!

To prevent possible damage, do not slam the hood to close it. Lower hood to approximately 12 inches (30 cm) and drop the hood to close. Make sure hood is fully closed for both latches. Never drive vehicle unless hood is fully closed, with both latches engaged.

DEP DEALER ePROCESS

LIFTGATE

Opening

To unlock the liftgate, use the key fob or activate the power door lock switches located on the driver door handle.

To open the liftgate, squeeze the liftgate release handle and pull the liftgate open with one fluid motion.

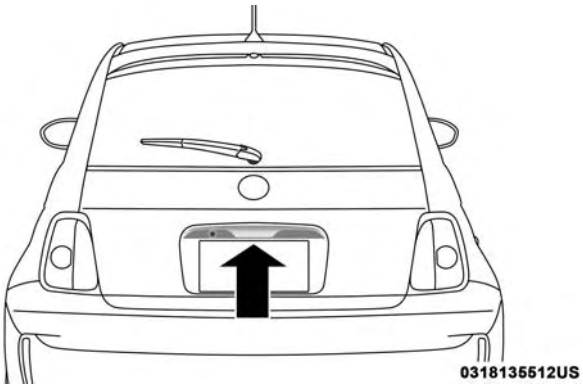

Liftgate Handle

WARNING!

- **Driving with the liftgate open can allow poisonous exhaust gases into your vehicle. You and your passengers could be injured by these fumes. Keep the liftgate closed when you are operating the vehicle.**
- **If you are required to drive with the liftgate open, make sure that all windows are closed, and the climate control blower switch is set at high speed. Do not use the recirculation mode.**

NOTE: Gas props support the liftgate in the open position. However, because the gas pressure drops with temperature, it may be necessary to assist the props when opening the liftgate in cold weather.

DEP DEALER ePROCESS

INTERNAL EQUIPMENT

Storage

Glove Compartment

The glove compartment is located on the passenger side of the instrument panel.

To open the glove compartment, pull the release handle.

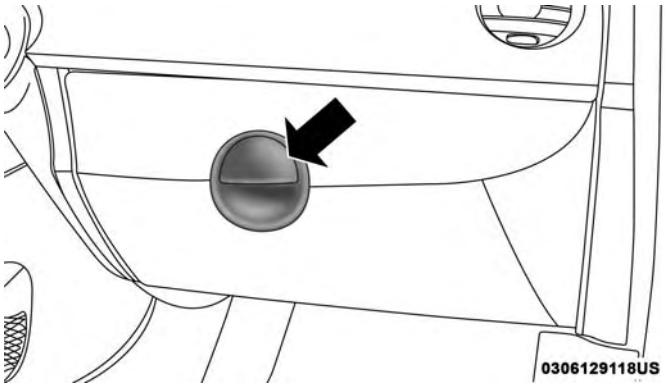

Glove Compartment Latch

Cupholders

Front Cupholders

For the driver and front passenger, cupholders are located on the floor console between the front seats.

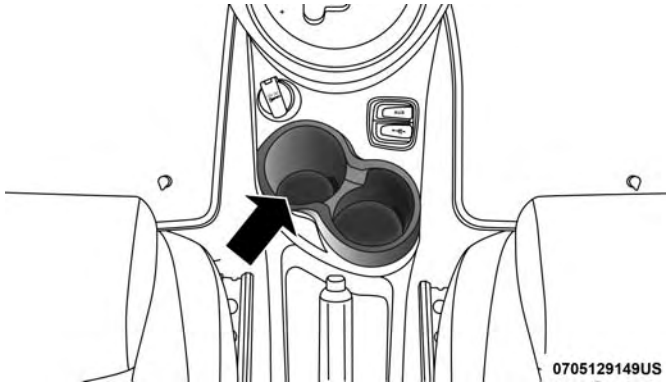

Front Cupholders

DEP
DEALER ePROCESS

Rear Cupholders

For rear passengers, there are cupholders located on the floor between the front driver and passenger seats.

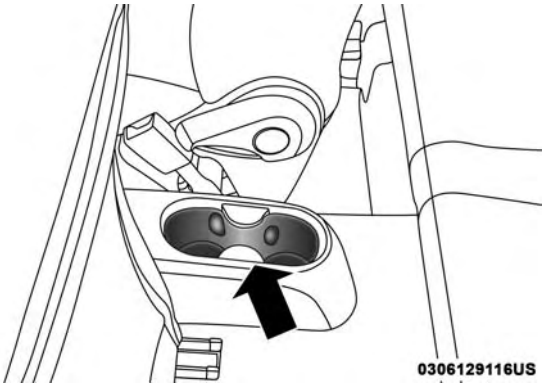

Rear Cupholders

Sun Visors

The driver and passenger sun visors are located on the headliner, near the front windshield. The sun visors can be rotated downward or up against the door glass. Both sun visors are equipped with courtesy mirrors. To view the courtesy mirror, slide the mirror cover outward.

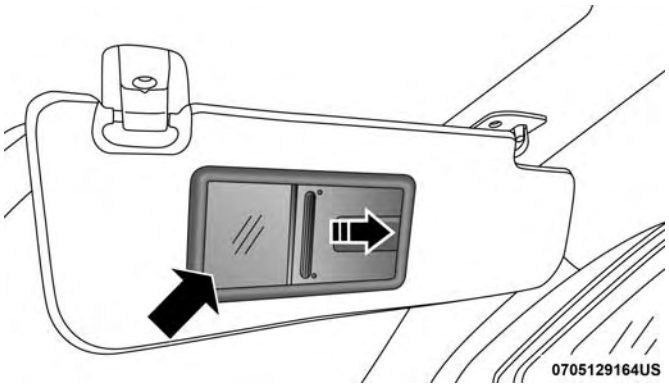

Slide Courtesy Mirror Cover Outward (Passenger Side Shown)

DEP
DEALER ePROCESS

Electrical Power Outlets

There is a standard 12 Volt (13 Amp) power outlet, located in the floor console, for added convenience. This power outlet can power mobile phones, electronics and other low power devices.

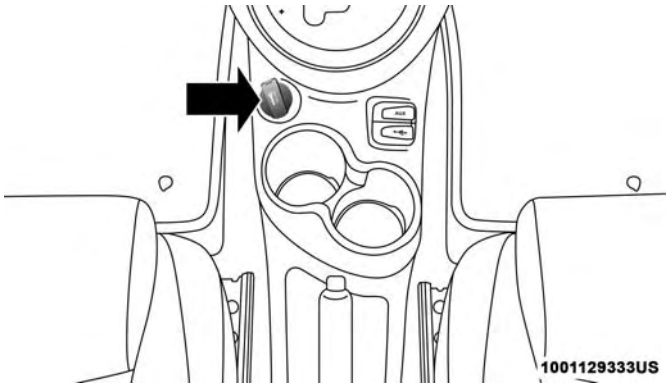

Center Stack Power Outlet

Power is available when the ignition switch is in the ON/RUN or START position. Insert the cigar lighter or accessory plug into the outlet for use. To preserve the heating element, do not hold the lighter in the heating position.

CAUTION!

- **Do not exceed the maximum power of 160 Watts (13 Amps) at 12 Volts. If the 160 Watts (13 Amps) power rating is exceeded, the fuse protecting the system will need to be replaced.**
- **Power outlets are designed for accessory plugs only. Do not insert any other object in the power outlets as this will damage the outlet and blow the fuse. Improper use of the power outlet can cause damage not covered by your New Vehicle Limited Warranty.**

Your vehicle is also equipped with a charge-only USB power outlet that can be used to power cellular phones, small electronics, and other low powered electrical accessories. This USB charging outlet is located inside the glove compartment.

DEP
DEALER ePROCESS

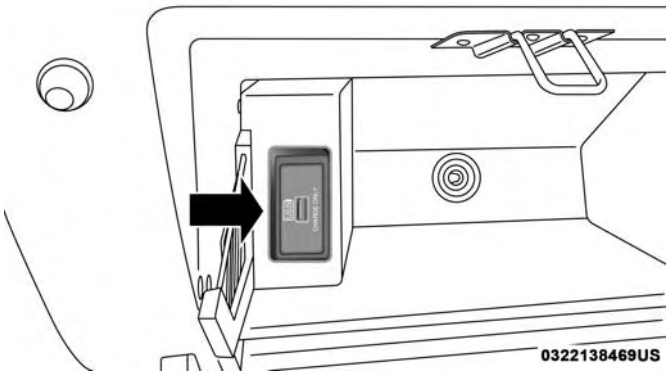

Glove Compartment Charge-Only USB Port

NOTE: Close the glove compartment immediately after use while driving. Injuries may occur during accidents if the glove compartment is left open.

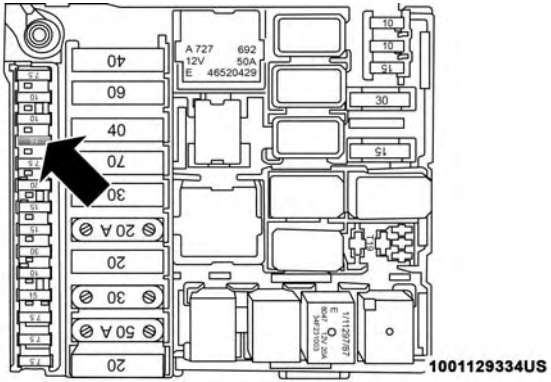

Power Outlet Fuse Location – Underhood

F15 Fuse 15 A Blue Cigar Lighter Front Console/Aux Power Outlet

WARNING!

To avoid serious injury or death:

- **Only devices designed for use in this type of outlet should be inserted into any 12 Volt outlet.**
- **Do not touch with wet hands.**
- **Close the lid when not in use and while driving the vehicle.**

(Continued)

DEP DEALER ePROCESS

WARNING! *(Continued)*

- **If this outlet is mishandled, it may cause an electric shock and failure.**

CAUTION!

- **Many accessories that can be plugged in draw power from the vehicle's battery, even when not in use (i.e., cellular phones, etc.). Eventually, if plugged in long enough, the vehicle's battery will discharge sufficiently to degrade battery life and/or prevent the engine from starting.**
- **Accessories that draw higher power (i.e., coolers, vacuum cleaners, lights, etc.) will degrade the battery even more quickly. Only use these intermittently and with great caution.**
- **After the use of high power draw accessories, or long periods of the vehicle not being started (with accessories still plugged in), the vehicle must be driven a sufficient length of time to allow the generator to recharge the vehicle's battery.**

DEP
DEALER ePROCESS

GETTING TO KNOW YOUR INSTRUMENT PANEL

CONTENTS

■ INSTRUMENT CLUSTERS 72
- □ Instrument Cluster Descriptions 78

■ INSTRUMENT CLUSTER DISPLAY 79
- □ Instrument Cluster Display Control Buttons 80
- □ Instrument Cluster Display Setup Menu. 81
- □ Oil Change Reset 82

■ TRIP COMPUTER. 82
- □ Trip Button 82
- □ Trip Functions 82
- □ Values Displayed 83

■ WARNING LIGHTS AND MESSAGES 84
- □ Red Warning Lights 84
- □ Yellow Warning Lights 88
- □ Yellow Indicator Lights 93
- □ Green Indicator Lights 94
- □ White Indicator Lights 94
- □ Blue Indicator Lights 94

■ ONBOARD DIAGNOSTIC SYSTEM — OBD II 95
- □ Onboard Diagnostic System (OBD II) Cybersecurity 95

■ EMISSIONS INSPECTION AND MAINTENANCE PROGRAMS 96

DEP DEALER ePROCESS

INSTRUMENT CLUSTERS

Your vehicle is equipped with one of the following instrument clusters.

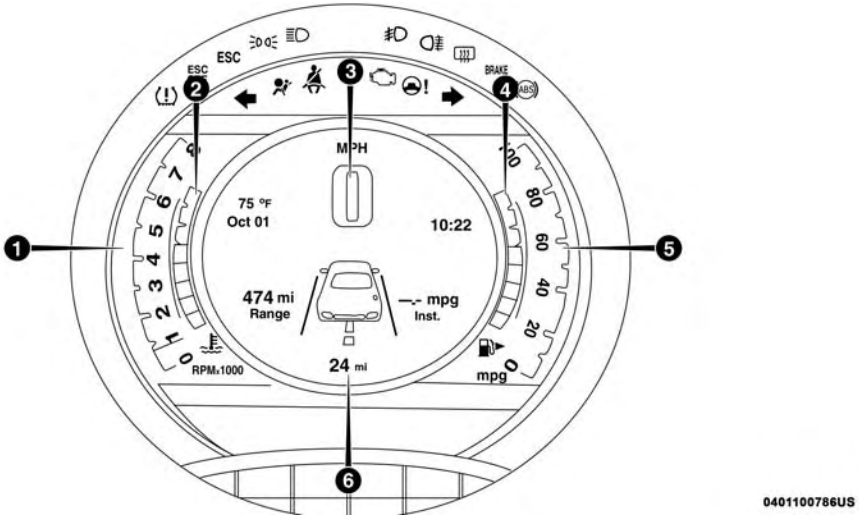

Lounge Instrument Cluster Base

DEP
DEALER ePROCESS

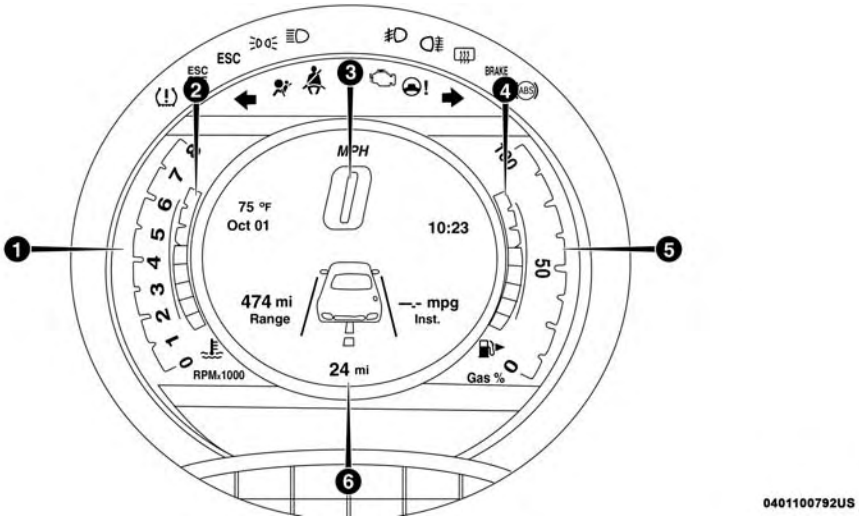

Lounge Instrument Cluster Sport Mode

DEP
DEALER ePROCESS

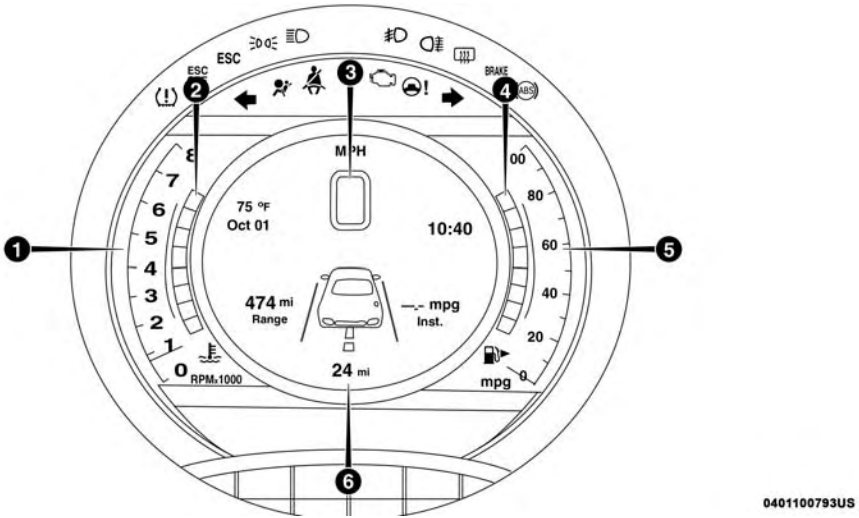

Sport Instrument Cluster Base

DEP
DEALER ePROCESS

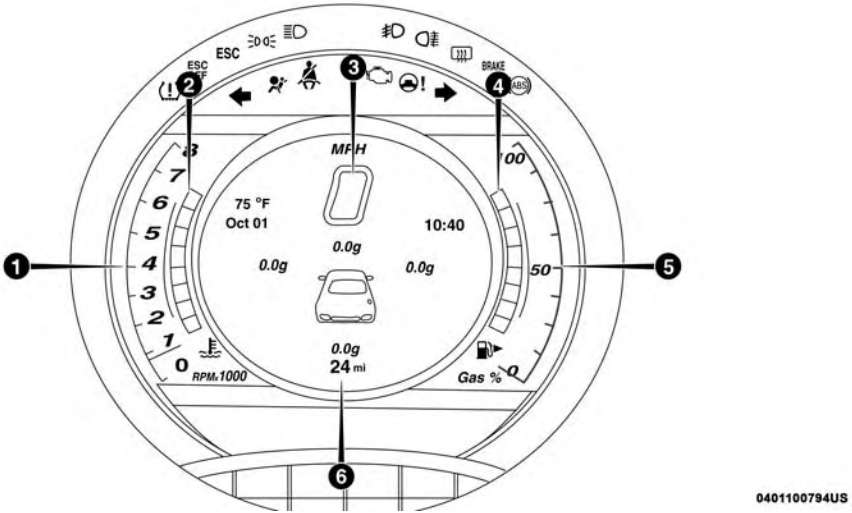

Sport Instrument Cluster Sport Mode

DEP
DEALER ePROCESS

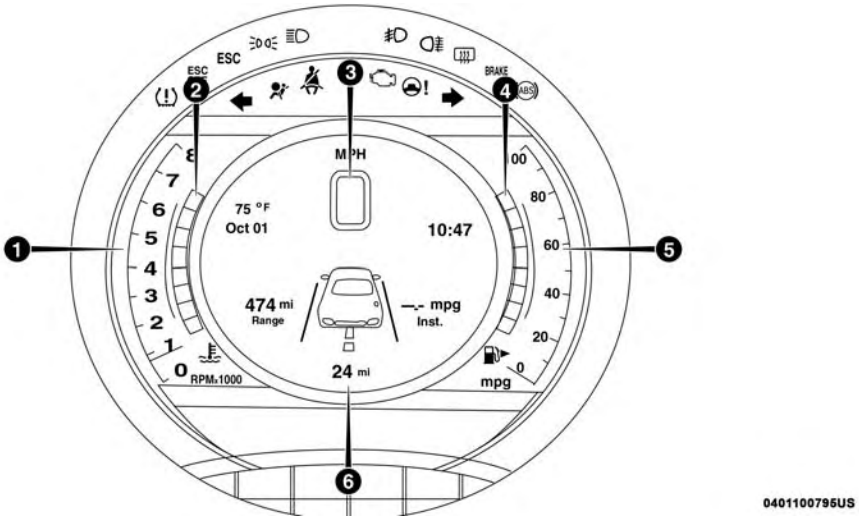

Sport Turbo Instrument Cluster Base

DEP
DEALER ePROCESS

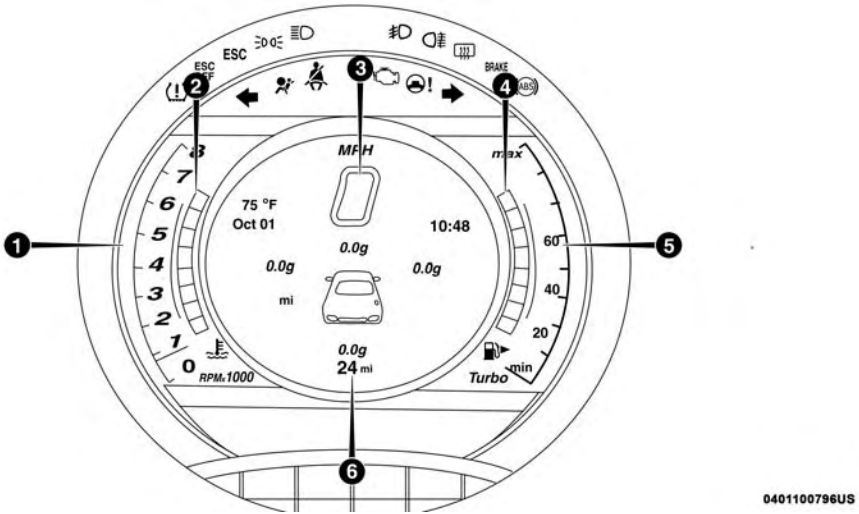

Sport Turbo Instrument Cluster Sport Mode

DEP
DEALER ePROCESS

Instrument Cluster Descriptions

1. **Tachometer**
   - This gauge measures engine revolutions per minute (RPM x 1000). Before the pointer reaches the red area, ease up on the accelerator to prevent engine damage.
2. **Temperature Gauge**
   - The temperature gauge shows engine coolant temperature. Any reading within the normal range indicates that the engine cooling system is operating satisfactorily.
   - The digital gauge will likely indicate a higher temperature when driving in hot weather, or up mountain grades. It should not be allowed to exceed the upper limits of the normal operating range.

WARNING!

- **Driving with a hot engine cooling system could damage your vehicle. If the temperature gauge reads "H" pull over and stop the vehicle. Idle the vehicle with the air conditioner turned off until the pointer drops back into the normal range. If the pointer**

(Continued)

WARNING! *(Continued)*

remains on the "H," turn the engine off immediately and call an authorized dealer for service.

- **A hot engine cooling system is dangerous. You or others could be badly burned by steam or boiling coolant. You may want to call an authorized dealer for service if your vehicle overheats. If you decide to look under the hood yourself, see "Servicing And Maintenance." Follow the warnings under the Cooling System Pressure Cap paragraph.**

3. **Speedometer**
   - Indicates vehicle speed.
4. **Fuel Gauge**
   - The digital display shows the amount of fuel in the tank.
   - The switching on of the digital warning light indicates that 1 – 1.3 gallons of fuel are left in the tank; in this situation, refuel as soon as possible.
   - Do not travel with the fuel tank almost empty; any gaps in fuel delivery could damage the catalytic converter.

DEP DEALER ePROCESS

5. **Base And Sport Mode Gauge Displays**

Depending on what options and trim level your vehicle may be equipped with, two gauge displays are available with the push of the Sport Mode button.

- Instant Consumption Bar graph: This bar graph shows the instant fuel consumption, the style changes according to vehicle version while minimum and maximum values change depending on selected unit. The possible labels are:
- Mpg
- Km/l
- l/100 km
- "Sport Mode" — Gas Pedal Percentage Gauge: This gauge shows what percent the gas pedal is currently depressed at.
- "Sport Mode" — The active instrument cluster display screen will change to the G-Force screen.
- "Sport Turbo Mode" — This gauge shows the Turbo boost during acceleration.
- "Turbo Pressure Gauge" — This gauge shows the level of turbo pressure.

NOTE: Different trips may have different values even if the same driving style is maintained. Some factors that may impact the calculated index value are:

- Traffic conditions
- Trip duration
- Temperature (engine and ambient)

6. **Instrument Cluster Display**

- The instrument cluster display features a driver-interactive display. Refer to "Instrument Cluster Display" in "Getting To Know Your Instrument Panel" for further information.

INSTRUMENT CLUSTER DISPLAY

Your vehicle may be equipped with an instrument cluster display, which offers useful information to the driver. With the ignition in the STOP/OFF mode, opening/closing of a door will activate the display for viewing, and display the total miles, or kilometers, in the odometer. Your instrument cluster display is designed to display important information about your vehicle's systems and features. Using a driver interactive display located on the instrument panel,

DEP DEALER ePROCESS

your instrument cluster display can show you how systems are working and give you warnings when they aren't. The steering wheel mounted controls allow you to scroll through and enter the main menus and submenus. You can access the specific information you want and make selections and adjustments.

Instrument Cluster Display Control Buttons

The driver-interactive instrument cluster display is located in the center of the instrument cluster.

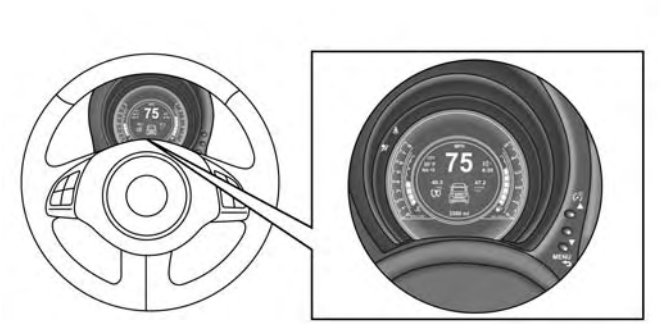

0307129354US

Instrument Cluster Display

The system display consists of the following:

- System Status
- Vehicle Information Warning Message Displays
- Personal Settings (Customer Programmable Features)
- Outside Temperature Display
- Trip Computer Functions
- Tire Pressure Monitoring Display

Instrument Cluster Display Control Buttons

Push and release the **MENU** button briefly to access the instrument cluster display. Push and hold the **MENU** button (approximately one second) to return to the main screen.

Push and release the **up** arrow button to scroll upward through the displayed menu and the related options or to increase the displayed value.

Push and release the **down** arrow button to scroll downward through the displayed menu and the related options or to decrease the value displayed.

NOTE: Up and **down** arrow buttons activate different functions according to the following situations:

- To scroll the menu options upwards or downwards.
- To increase or decrease values during settings.

DEP DEALER ePROCESS

NOTE: When opening one of the front doors, the instrument cluster display will turn on the clock and the miles or kilometers covered (if equipped) for a few seconds.

Instrument Cluster Display Setup Menu

The menu comprises a series of functions arranged in a cycle. Push and release the **up** and **down** arrow buttons to access the different options and settings (setup).

The setup menu can be activated by pushing the **MENU** button. A single push on the **up** or **down** arrow button will scroll through the setup menu options. The menu includes the following functions:

- Buzzer Volume
- Service — If Equipped
- Headlight Adjustment — If Equipped
- Trip B Data
- Audio Repetition — If Equipped
- Navigation Repetition — If Equipped

Selecting An Option Of The Main Menu Without Submenu

1. Briefly push and release the **MENU** button to select the main menu option to set.
2. Push and release the **up** or **down** arrow button (by single pushes) to select the new setting.
3. Briefly push and release the **MENU** button to store the new setting and go back to the main menu option previously selected.

Selecting An Option Of The Main Menu With Submenu

1. Briefly push and release the **MENU** button to display the first submenu option.
2. Push and release the **up** or **down** arrow button (by single pushes) to scroll through all the submenu options.
3. Briefly push and release the **MENU** button to select the displayed submenu option and to open the relevant setup menu.
4. Push and release the **up** or **down** arrow button (by single pushes) to select the new setting for this submenu option.

DEP DEALER ePROCESS

5. Briefly push and release the **MENU** button to store the new setting and go back to the previously selected submenu option.
6. Push and hold the **MENU** button to return to the main menu (short hold) or the main screen (longer hold).

Oil Change Reset

Your vehicle is equipped with an engine oil change indicator system. The "Change Engine Oil" message will appear in the instrument cluster display for approximately 5 seconds after a single chime has sounded to indicate the next scheduled oil change interval. The engine oil change indicator system is duty cycle based, which means the engine oil change interval may fluctuate, dependent upon your personal driving style.

Unless reset, this message will continue to display each time the ignition is placed in the MAR (ACC/ON/RUN) position. To turn off the message temporarily, push and release the MENU button. To reset the oil change indicator system (after performing the scheduled maintenance), refer to the following procedure.

1. Place the ignition in the MAR (ACC/ON/RUN) position. (Do not start the engine.)
2. Fully push the accelerator pedal slowly, three times within 10 seconds.
3. Turn the ignition switch to the OFF position.

NOTE: If the indicator message illuminates when you start the vehicle, the oil change indicator system did not reset. If necessary, repeat this procedure.

TRIP COMPUTER

The Trip Computer is located in the instrument cluster. It displays trip information such as: trip information, range, fuel consumption, average speed, and travel time.

Trip Button

The **TRIP** button, located on the right steering column stalk, can be used to display and to reset the previously described values.

- A short button push displays the different values.
- A long button push resets the system and starts a new trip.

Trip Functions

Both trip functions are resettable (reset — start of new trip).

DEP DEALER ePROCESS

"Trip A" can be used to display the figures relating to:

- Trip Distance A
- Average Fuel Consumption
- Average Speed A
- Travel Time A (Driving Time)

"Trip B" can be used to display the figures relating to:

- Trip Distance B
- Average Fuel Consumption
- Average Speed B
- Travel Time B (Driving Time)

"Current Trip" can be used to display the figures relating to:

- Range
- Instantaneous Fuel Consumption

NOTE: "Trip B" functions may be excluded (see "Trip B Data"). "Range" and "Instantaneous Fuel Consumption" cannot be reset.

Values Displayed

Range

This indicates the distance which may be traveled with the fuel remaining in the tank, assuming that driving conditions will not change. The message "----" will appear on the display in the following cases:

- Distance less than 30 miles (or 50 km).
- The vehicle is parked for a long time with the engine running.

NOTE: The range depends on several factors: driving style, type of route (freeway, residential, mountain roads, etc.), and conditions of use of the vehicle (load, tire pressure, etc.). Trip planning must take into account the above notes.

Distance Traveled

This value shows the distance covered since the last reset.

Average Fuel Economy

This value shows the approximate average fuel consumption since the last reset.

DEP DEALER ePROCESS

Instantaneous Fuel Economy

This indicates the fuel consumption. The value is constantly updated. The message "----" will appear on the display if the vehicle is parked with the engine running.

Average Speed

This value shows the vehicle's average speed as a function of the overall time elapsed since the last reset.

Travel Time

This value shows the time elapsed since the last reset.

WARNING LIGHTS AND MESSAGES

The warning/indicator lights will illuminate in the instrument panel together with a dedicated message and/or acoustic signal when applicable. These indications are indicative and precautionary and as such must not be considered as exhaustive and/or alternative to the information contained in the Owner's Manual, which you are advised to read carefully in all cases. Always refer to the information in this chapter in the event of a failure indication. All active telltales will display first if applicable. The system check menu may appear different based upon equipment options and current vehicle status. Some telltales are optional and may not appear.

Red Warning Lights

— Air Bag Warning Light

This warning light will illuminate to indicate a fault with the air bag, and will turn on for four to eight seconds as a bulb check when the ignition is placed in the ON/RUN or ACC/ON/RUN position. This light will illuminate with a single chime when a fault with the air bag has been detected, it will stay on until the fault is cleared. If the light is either not on during startup, stays on, or turns on while driving, have the system inspected at an authorized dealer as soon as possible.

BRAKE — Brake Warning Light

This warning light monitors various brake functions, including brake fluid level and parking brake application. If the brake light turns on it may indicate that the parking brake is applied, that the brake fluid level is low, or that there is a problem with the anti-lock brake system reservoir.

If the light remains on when the parking brake has been disengaged, and the fluid level is at the full mark on the master cylinder reservoir, it indicates a possible brake hydraulic system malfunction or that a problem with the Brake Booster has been detected by the Anti-Lock Brake System (ABS) / Electronic Stability Control (ESC) system.

DEP DEALER ePROCESS

In this case, the light will remain on until the condition has been corrected. If the problem is related to the brake booster, the ABS pump will run when applying the brake, and a brake pedal pulsation may be felt during each stop.

The dual brake system provides a reserve braking capacity in the event of a failure to a portion of the hydraulic system. A leak in either half of the dual brake system is indicated by the Brake Warning Light, which will turn on when the brake fluid level in the master cylinder has dropped below a specified level.

The light will remain on until the cause is corrected.

NOTE: The light may flash momentarily during sharp cornering maneuvers, which change fluid level conditions. The vehicle should have service performed, and the brake fluid level checked.

If brake failure is indicated, immediate repair is necessary.

WARNING!

Driving a vehicle with the red brake light on is dangerous. Part of the brake system may have failed. It will take longer to stop the vehicle. You could have a collision. Have the vehicle checked immediately.

Vehicles equipped with the Anti-Lock Brake System (ABS) are also equipped with Electronic Brake Force Distribution (EBD). In the event of an EBD failure, the Brake Warning Light will turn on along with the ABS Light. Immediate repair to the ABS system is required.

Operation of the Brake Warning Light can be checked by turning the ignition switch from the OFF position to the ON/RUN position. The light should illuminate for approximately two seconds. The light should then turn off unless the parking brake is applied or a brake fault is detected. If the light does not illuminate, have the light inspected by an authorized dealer.

The light also will turn on when the parking brake is applied with the ignition switch in the ON/RUN position.

NOTE: This light shows only that the parking brake is applied. It does not show the degree of brake application.

— Battery Charge Warning Light

This warning light will illuminate when the battery is not charging properly. If it stays on while the engine is running, there may be a malfunction with the charging system. Contact an authorized dealer as soon as possible.

This indicates a possible problem with the electrical system or a related component.

DEALER ePROCESS

— Door Open Warning Light

This indicator will illuminate when one or more door(s) are not fully closed.

NOTE: If the vehicle is moving and a door is opened, there will also be a single chime.

— Electric Power Steering Fault Warning Light

This warning light will turn on when there's a fault with the EPS (Electric Power Steering) system. Refer to "Power Steering" in "Starting And Operating" for further information.

WARNING!
Continued operation with reduced assist could pose a safety risk to yourself and others. Service should be obtained as soon as possible.

— Electronic Throttle Control (ETC) Warning Light

This warning light will illuminate to indicate a problem with the Electronic Throttle Control (ETC) system. If a problem is detected while the vehicle is running, the light will either stay on or flash depending on the nature of the problem. Cycle the ignition when the vehicle is safely and completely stopped and the transmission is placed in the PARK position. The light should turn off. If the light remains on with the vehicle running, your vehicle will usually be drivable; however, see an authorized dealer for service as soon as possible.

NOTE: This light may turn on if the accelerator and brake pedals are pressed at the same time.

If the light continues to flash when the vehicle is running, immediate service is required and you may experience reduced performance, an elevated/rough idle, or engine stall and your vehicle may require towing. The light will come on when the ignition is placed in the ON/RUN or ACC/ON/RUN position and remain on briefly as a bulb check. If the light does not come on during starting, have the system checked by an authorized dealer.

— Engine Coolant Temperature Warning Light

This light warns of an overheated engine condition. If the engine coolant temperature is too high, this indicator will illuminate and a single chime will sound.

DEP DEALER ePROCESS

If the light turns on while driving, safely pull over and stop the vehicle. If the A/C system is on, turn it off. Also, shift the transmission into NEUTRAL and idle the vehicle. If the temperature reading does not return to normal, turn the engine off immediately and call for service. Refer to "If Your Engine Overheats" in "In Case Of Emergency" for further information.

— Hood Open Warning Light — If Equipped

This warning light will illuminate when the hood is left open and not fully closed.

— Liftgate Open Warning Light

This indicator will illuminate when the liftgate is open/ajar/not fully closed.

— Oil Pressure Warning Light

This warning light will illuminate to indicate low engine oil pressure. If the light turns on while driving, stop the vehicle, shut off the engine as soon as possible, and contact an authorized dealer. A chime will sound when this light turns on.

Do not operate the vehicle until the cause is corrected. This light does not indicate how much oil is in the engine. The engine oil level must be checked under the hood.

— Seat Belt Reminder Warning Light

This warning light indicates when the driver or passenger seat belt is unbuckled. When the ignition is first placed in the ON/RUN or ACC/ON/RUN position and if the driver's seat belt is unbuckled, a chime will sound and the light will turn on. When driving, if the driver or front passenger seat belt remains unbuckled, the Seat Belt Reminder Light will flash or remain on continuously and a chime will sound.

Refer to "Occupant Restraint Systems" in "Safety" for further information.

— Transmission Fault Warning Light

This light will illuminate (together with a message in the instrument cluster display and a buzzer) to indicate a transmission fault. Contact an authorized dealer if the message remains after restarting the engine.

DEP DEALER ePROCESS

Yellow Warning Lights

(ABS) — Anti-Lock Brake (ABS) Warning Light

This warning light monitors the Anti-Lock Brake System (ABS). The light will turn on when the ignition is placed in the ON/RUN or ACC/ON/RUN position and may stay on for as long as four seconds.

If the ABS light remains on or turns on while driving, then the Anti-Lock portion of the brake system is not functioning and service is required as soon as possible. However, the conventional brake system will continue to operate normally, assuming the Brake Warning Light is not also on.

If the ABS light does not turn on when the ignition is placed in the ON/RUN or ACC/ON/RUN position, have the brake system inspected by an authorized dealer.

ESC — Electronic Stability Control (ESC) Warning Light — If Equipped

The "ESC Indicator Light" in the instrument cluster will come on when the ignition is placed in the ON/RUN or MAR (ACC/ON/RUN) position, and when ESC is activated. It should turn off with the engine running. If the "ESC Indicator Light" comes on continuously with the engine running, a malfunction has been detected in the ESC system. If this light remains on after several ignition cycles, and the vehicle has been driven several miles (kilometers) at speeds greater than 30 mph (48 km/h), see your authorized dealer as soon as possible to have the problem diagnosed and corrected.

- The "ESC Off Indicator Light" and the "ESC Indicator Light" come on momentarily each time the ignition is placed in the ON/RUN or MAR (ACC/ON/RUN) position.
- Each time the ignition is turned to ON/RUN or MAR (ACC/ON/RUN), the ESC system will be on, even if it was turned off previously.
- The ESC system will make buzzing or clicking sounds when it is active. This is normal; the sounds will stop when ESC becomes inactive.
- This light will come on when the vehicle is in an ESC event.

ESC OFF — Electronic Stability Control (ESC) Off Warning Light — If Equipped

This light indicates the Electronic Stability Control (ESC) is off.

DEP DEALER ePROCESS

Each time the ignition is turned to ON/RUN or ACC/ON/RUN, the ESC system will be on, even if it was turned off previously.

— External Light Failure Indicator Light — If Equipped

The External Light Failure Indicator will come on when a failure to one of the following lights is detected:

- Direction Indicators
- Backup Lights
- Parking Lights
- Daytime Running Lights
- License Plate Lights

The failure relating to these lights could be:

- One or more blown bulbs
- A blown protection fuse
- A break in the electrical connection

— Fuel Cutoff Warning Light — If Equipped

This warning light will illuminate after an accident has occurred, and the system has shut the fuel off.

— Fuel Cutoff Failure Light — If Equipped

This light will illuminate if there is a fuel cutoff failure. If this light illuminates, take it to an authorized dealer and have them inspect it.

— Generic Warning Light

The Generic Warning Light will illuminate if any of the following conditions occur: Oil Change Request, Engine Oil Pressure Sensor Failure, External Light Failure, Fuel Cut-Off Not Available, Parking Sensor Failure, DST System Failure.

— Hill Holder Failure Warning Light

This warning light will illuminate when the Hill Holder System is not functioning properly and service is required. Contact an authorized dealer.

— Low Fuel Warning Light

When the fuel level reaches approximately 1–1.3 gal (3–5 L) this light will turn on, and remain on until fuel is added.

— Engine Check/Malfunction Indicator Warning Light (MIL)

The Engine Check/Malfunction Indicator Light (MIL) is a part of an Onboard Diagnostic System called OBD II that

DEP DEALER ePROCESS

monitors engine and automatic transmission control systems. This warning light will illuminate when the ignition is in the ON/RUN position before engine start. If the bulb does not come on when turning the ignition switch from OFF to ON/RUN, have the condition checked promptly.

Certain conditions, such as a loose or missing gas cap, poor quality fuel, etc., may illuminate the light after engine start. The vehicle should be serviced if the light stays on through several typical driving styles. In most situations, the vehicle will drive normally and will not require towing.

When the engine is running, the MIL may flash to alert serious conditions that could lead to immediate loss of power or severe catalytic converter damage. The vehicle should be serviced by an authorized dealer as soon as possible if this occurs.

WARNING!

A malfunctioning catalytic converter, as referenced above, can reach higher temperatures than in normal operating conditions. This can cause a fire if you drive slowly or park over flammable substances such as dry plants, wood, cardboard, etc. This could result in death or serious injury to the driver, occupants or others.

CAUTION!

Prolonged driving with the Malfunction Indicator Light (MIL) on could cause damage to the vehicle control system. It also could affect fuel economy and driveability. If the MIL is flashing, severe catalytic converter damage and power loss will soon occur. Immediate service is required.

— ParkSense Failure Warning Light

This warning light will illuminate when the ParkSense System is not functioning properly and service is required. Contact an authorized dealer.

— Service Warning Light — If Equipped

The “Maintenance Plan” includes vehicle maintenance at fixed intervals. For further information, refer to ″Scheduled Servicing” in “Servicing And Maintenance”. This message is displayed automatically along with the warning light when the key is turned to MAR (ACC/ON/RUN) - 1,242 miles (2,000 km) before these deadlines and reappears every 124 miles (200 km). Below 124 miles (200 km) servicing indications are more frequent. The indication will appear in miles or kilometers according to the ″Unit Of Measurement” settings. When the next scheduled service is

DEP DEALER ePROCESS

approaching and the key is turned to MAR (ACC/ON/RUN), the word "Service" will appear on the display, followed by the number of miles or kilometers left. Contact a dedicated authorized dealership. The operations in the "Maintenance Plan" will be performed and the message will be reset.

(!) — Tire Pressure Monitoring System (TPMS) Warning Light

The warning light switches on and a message is displayed to indicate that the tire pressure is lower than the recommended value and/or that slow pressure loss is occurring. In these cases, optimal tire duration and fuel consumption may not be guaranteed.

Should one or more tires be in the condition mentioned above, the display will show the indications corresponding to each tire.

CAUTION!

Do not continue driving with one or more flat tires as handling may be compromised. Stop the vehicle, avoiding sharp braking and steering. If a tire puncture

(Continued)

CAUTION! *(Continued)*

occurs, repair immediately using the dedicated tire repair kit and contact an authorized dealer as soon as possible.

Each tire, including the spare (if provided), should be checked monthly when cold and inflated to the inflation pressure recommended by the vehicle manufacturer on the vehicle placard or tire inflation pressure label. (If your vehicle has tires of a different size than the size indicated on the vehicle placard or tire inflation pressure label, you should determine the proper tire inflation pressure for those tires.)

As an added safety feature, your vehicle has been equipped with a Tire Pressure Monitoring System (TPMS) that illuminates a low tire pressure telltale when one or more of your tires is significantly under-inflated. Accordingly, when the low tire pressure telltale illuminates, you should stop and check your tires as soon as possible, and inflate them to the proper pressure. Driving on a significantly under-inflated tire causes the tire to overheat and can lead to tire failure. Under-inflation also reduces fuel efficiency and tire tread life, and may affect the vehicle's handling and stopping ability.

DEP DEALER ePROCESS

Please note that the TPMS is not a substitute for proper tire maintenance, and it is the driver's responsibility to maintain correct tire pressure, even if under-inflation has not reached the level to trigger illumination of the TPMS low tire pressure telltale.

Your vehicle has also been equipped with a TPMS malfunction indicator to indicate when the system is not operating properly. The TPMS malfunction indicator is combined with the low tire pressure telltale. When the system detects a malfunction, the telltale will flash for approximately one minute and then remain continuously illuminated. This sequence will continue upon subsequent vehicle start-ups as long as the malfunction exists. When the malfunction indicator is illuminated, the system may not be able to detect or signal low tire pressure as intended. TPMS malfunctions may occur for a variety of reasons, including the installation of replacement or alternate tires or wheels on the vehicle that prevent the TPMS from functioning properly. Always check the TPMS malfunction telltale after replacing one or more tires or wheels on your vehicle to ensure that the replacement or alternate tires and wheels allow the TPMS to continue to function properly.

CAUTION!

The TPMS has been optimized for the original equipment tires and wheels. TPMS pressures and warning have been established for the tire size equipped on your vehicle. Undesirable system operation or sensor damage may result when using replacement equipment that is not of the same size, type, and/or style. Aftermarket wheels can cause sensor damage. Using aftermarket tire sealants may cause the Tire Pressure Monitoring System (TPMS) sensor to become inoperable. After using an aftermarket tire sealant it is recommended that you take your vehicle to your authorized dealer to have your sensor function checked.

— Immobilizer Vehicle Theft Alarm Warning Light

This warning light will illuminate when the vehicle security alarm system has detected an attempt to break into the vehicle.

— Fuel Level Sensor Failure

This light illuminates when there is a fuel level sensor failure. If this light illuminates, take it to an authorized dealer and have them inspect it.

DEP DEALER ePROCESS

Yellow Indicator Lights

— Icy Road Condition Indicator Light — If Equipped

This light will illuminate during an icy road condition.

— Stop Light Failure Indicator Light

This light will illuminate if one or more of the stop light bulb fails.

The failure relating to this light could be:

- One or more blown bulbs.
- A blown protection fuse.
- A break in the electrical connection.

— Rear Defrost Light

This indicator will illuminate when the rear window defroster is on. The rear window defroster automatically turns off after 20 minutes.

CAUTION!

Failure to follow these cautions can cause damage to the heating elements:

- **Use care when washing the inside of the rear window. Do not use abrasive window cleaners on the interior surface of the window. Use a soft cloth and a mild washing solution, wiping parallel to the heating elements. Labels can be peeled off after soaking with warm water.**
- **Do not use scrapers, sharp instruments, or abrasive window cleaners on the interior surface of the window.**
- **Keep all objects a safe distance from the window.**

— Oil Change Required Indicator Light

This indicator light will illuminate to indicate that an oil change is required. To reset the oil change indicator system, refer to “Oil Change Reset” in “Instrument Cluster Display.”

DEP DEALER ePROCESS

Green Indicator Lights

— Cruise Control Set Indicator Light — If Equipped

This indicator light will illuminate when the cruise control is set to the desired speed. Refer to "Speed Control" in "Starting And Operating" for further information.

— Front Fog Indicator Light — If Equipped

This indicator light will illuminate when the front fog lights are on.

— Park/Headlight On Indicator Light

This indicator light will illuminate when the park lights or headlights are turned on.

— Turn Signal Indicator Lights

When the left or right turn signal is activated, the turn signal indicator will flash independently and the corresponding exterior turn signal lamps will flash. Turn signals can be activated when the multifunction lever is moved down (left) or up (right).

NOTE:

- A continuous chime will sound if the vehicle is driven more than 1 mile (1.6 km) with either turn signal on.
- Check for an inoperative outside light bulb if either indicator flashes at a rapid rate.

White Indicator Lights

— Cruise Control ON Indicator Light

This indicator light will illuminate when the electronic speed control is ON, but a speed has not been set.

Blue Indicator Lights

— High Beam Indicator Light

This indicator light will illuminate to indicate that the high beam headlights are on. With the low beams activated, push the multifunction lever forward (toward the front of the vehicle) to turn on the high beams. Pull the multifunction lever rearward (toward the rear of the vehicle) to turn off the high beams. If the high beams are off, pull the lever toward you for a temporary high beam on, "flash to pass" scenario.

DEP DEALER ePROCESS

ONBOARD DIAGNOSTIC SYSTEM — OBD II

Your vehicle is equipped with a sophisticated Onboard Diagnostic system called OBD II. This system monitors the performance of the emissions, engine, and transmission control systems. When these systems are operating properly, your vehicle will provide excellent performance and fuel economy, as well as engine emissions well within current government regulations.

If any of these systems require service, the OBD II system will turn on the Malfunction Indicator Light (MIL). It will also store diagnostic codes and other information to assist your service technician in making repairs. Although your vehicle will usually be drivable and not need towing, see an authorized dealer for service as soon as possible.

CAUTION!

- **Prolonged driving with the MIL on could cause further damage to the emission control system. It could also affect fuel economy and driveability. The vehicle must be serviced before any emissions tests can be performed.**

(Continued)

CAUTION! *(Continued)*

- **If the MIL is flashing while the vehicle is running, severe catalytic converter damage and power loss will soon occur. Immediate service is required.**

Onboard Diagnostic System (OBD II) Cybersecurity

Your vehicle is required to have an Onboard Diagnostic system (OBD II) and a connection port to allow access to information related to the performance of your emissions controls. Authorized service technicians may need to access this information to assist with the diagnosis and service of your vehicle and emissions system.

WARNING!

- **ONLY an authorized service technician should connect equipment to the OBD II connection port in order to read the VIN, diagnose, or service your vehicle.**
- **If unauthorized equipment is connected to the OBD II connection port, such as a driver-behavior tracking device, it may:**
  - **Be possible that vehicle systems, including safety related systems, could be impaired or a loss of**

(Continued)

DEP DEALER ePROCESS

WARNING! *(Continued)*

vehicle control could occur that may result in an accident involving serious injury or death.

- **Access, or allow others to access, information stored in your vehicle systems, including personal information.**

For further information, refer to "Cybersecurity" in the "Multimedia" section.

EMISSIONS INSPECTION AND MAINTENANCE PROGRAMS

In some localities, it may be a legal requirement to pass an inspection of your vehicle's emissions control system. Failure to pass could prevent vehicle registration.

For states that require an Inspection and Maintenance (I/M), this check verifies the "Malfunction Indicator Light (MIL)" is functioning and is not on when the engine is running, and that the OBD II system is ready for testing.

Normally, the OBD II system will be ready. The OBD II system may **not** be ready if your vehicle was recently serviced, recently had a dead battery or a battery replacement. If the OBD II system should be determined not ready for the I/M test, your vehicle may fail the test.

Your vehicle has a simple ignition actuated test, which you can use prior to going to the test station. To check if your vehicle's OBD II system is ready, you must do the following:

1. Cycle the ignition switch to the ON position, but do not crank or start the engine.

NOTE: If you crank or start the engine, you will have to start this test over.

2. As soon as you cycle the ignition switch to the ON position, you will see the "Malfunction Indicator Light (MIL)" symbol come on as part of a normal bulb check.

DEP DEALER ePROCESS

3. Approximately 15 seconds later, one of two things will happen:

- The MIL will flash for about ten seconds and then return to being fully illuminated until you turn OFF the ignition or start the engine. This means that your vehicle's OBD II system is **not ready** and you should **not** proceed to the I/M station.
- The MIL will not flash at all and will remain fully illuminated until you place the ignition in the off position or start the engine. This means that your vehicle's OBD II system is **ready** and you can proceed to the I/M station.

If your OBD II system is **not ready,** you should see an authorized dealer or repair facility. If your vehicle was recently serviced or had a battery failure or replacement, you may need to do nothing more than drive your vehicle as you normally would in order for your OBD II system to update. A recheck with the above test routine may then indicate that the system is **now ready**.

Regardless of whether your vehicle's OBD II system is ready or not, if the MIL is illuminated during normal vehicle operation you should have your vehicle serviced before going to the I/M station. The I/M station can fail your vehicle because the MIL is on with the engine running.

DEP
DEALER ePROCESS

DEP
DEALER ePROCESS

SAFETY

CONTENTS

■ SAFETY FEATURES 100
- □ Four-Wheel Anti-Lock Brake System (ABS) 100
- □ Electronic Brake Control System 101

■ AUXILIARY DRIVING SYSTEMS 106
- □ Tire Pressure Monitoring System (TPMS) 106

■ OCCUPANT RESTRAINT SYSTEMS 113
- □ Occupant Restraint Systems Features 113
- □ Important Safety Precautions 113
- □ Seat Belt Systems 114
- □ Supplemental Restraint Systems (SRS) 123
- □ Child Restraints 137
- □ Transporting Pets 153

■ SAFETY TIPS 154
- □ Transporting Passengers 154
- □ Exhaust Gas 154
- □ Safety Checks You Should Make Inside The Vehicle 155
- □ Periodic Safety Checks You Should Make Outside The Vehicle 157

DEP DEALER ePROCESS

SAFETY FEATURES

Four-Wheel Anti-Lock Brake System (ABS)

The Four-Wheel ABS is designed to aid the driver in maintaining vehicle control under adverse braking conditions. The system operates with a separate computer to modulate hydraulic pressure, to prevent wheel lock-up and to help avoid skidding on slippery surfaces.

The system's pump motor runs during an ABS stop to provide regulated hydraulic pressure. The pump motor makes a low humming noise during operation, which is normal.

The ABS includes an amber ABS Warning Light. When the light is illuminated, the ABS is not functioning. The system reverts to standard non-anti-lock brakes. Turning the ignition OFF and ON again may reset the ABS if the fault detected was only momentary.

WARNING!

- **The ABS contains sophisticated electronic equipment that may be susceptible to interference caused**

(Continued)

WARNING! *(Continued)*

by improperly installed or high output radio transmitting equipment. This interference can cause possible loss of anti-lock braking capability. Installation of such equipment should be performed by qualified professionals.

- **Pumping of the Anti-Lock Brakes will diminish their effectiveness and may lead to a collision. Pumping makes the stopping distance longer. Just press firmly on your brake pedal when you need to slow down or stop.**
- **The ABS cannot prevent the natural laws of physics from acting on the vehicle, nor can it increase braking or steering efficiency beyond that afforded by the condition of the vehicle brakes and tires or the traction afforded.**
- **The ABS cannot prevent collisions, including those resulting from excessive speed in turns, following another vehicle too closely, or hydroplaning.**
- **The capabilities of an ABS equipped vehicle must never be exploited in a reckless or dangerous manner that could jeopardize the user's safety or the safety of others.**

DEP DEALER ePROCESS

When you are in a severe braking condition involving the use of the ABS, you will experience some pedal drop as the vehicle comes to a stop. This is the result of the system reverting to the base brake system.

Engagement of the ABS may be accompanied by a pulsing sensation. You may also hear a clicking noise. These occurrences are normal and indicate that the system is functioning properly.

Electronic Brake Control System

Your vehicle is equipped with a advanced electronic brake control system that includes the Brake Assist System (BAS), Traction Control System (TCS), Hill Start Assist (HSA), and Electronic Stability Control (ESC). All systems work together to enhance vehicle stability and control in various driving conditions and are commonly referred to as ESC.

Brake Assist System (BAS)

The BAS is designed to optimize the vehicle's braking capability during emergency braking maneuvers. The system detects an emergency braking situation by sensing the rate and amount of brake application and then applies optimum pressure to the brakes. This can help reduce braking distances. The BAS complements the anti-lock brake system (ABS). Applying the brakes very quickly results in the best BAS assistance. To receive the benefit of the system, you must apply continuous braking pressure during the stopping sequence, (do not "pump" the brakes). Do not reduce brake pedal pressure unless braking is no longer desired. Once the brake pedal is released, the BAS is deactivated.

WARNING!

The Brake Assist System (BAS) cannot prevent the natural laws of physics from acting on the vehicle, nor can it increase the traction afforded by prevailing road conditions. BAS cannot prevent collisions, including those resulting from excessive speed in turns, driving on very slippery surfaces, or hydroplaning. The capabilities of a BAS-equipped vehicle must never be exploited in a reckless or dangerous manner, which could jeopardize the user's safety or the safety of others.

Traction Control System (TCS)

This system monitors the amount of wheel spin of each of the driven wheels. If wheel spin is detected, brake pressure is applied to the slipping wheel(s) and engine power is reduced to provide enhanced acceleration and stability.

DEALER ePROCESS

A feature of the TCS system, Brake Limited Differential (BLD), functions similar to a limited slip differential and controls the wheel spin across a driven axle. If one wheel on a driven axle is spinning faster than the other, the system will apply the brake of the spinning wheel. This will allow more engine torque to be applied to the wheel that is not spinning. This feature remains active even if TCS and ESC are in the Partial Off mode. Refer to "Electronic Stability Control (ESC)" in this section for further information.

Hill Start Assist (HSA)

The HSA system is designed to assist the driver when starting a vehicle from a stop on a hill. HSA will maintain the level of brake pressure the driver applied for a short period of time after the driver takes his foot off the brake pedal. If the driver does not apply the throttle during this short period of time, the system will release brake pressure and the vehicle will roll down the hill. The system will release brake pressure in proportion to the amount of throttle applied as the vehicle starts to move in the intended direction of travel.

HSA Activation Criteria

The following criteria must be met in order for HSA to activate:

- Vehicle must be stopped.
- Vehicle must be on a 2.5% (manual transmission) or 7% grade or greater (automatic transmission) hill.
- Gear selection matches vehicle uphill direction (i.e., vehicle in NEUTRAL (manual transmission), vehicle facing uphill is in forward gear; vehicle backing uphill is in REVERSE gear).

WARNING!

There may be situations on minor hills with a loaded vehicle, or while pulling a trailer, when the system will not activate and slight rolling may occur. This could cause a collision with another vehicle or object. Always remember the driver is responsible for braking the vehicle.

DEP
DEALER ePROCESS

Disabling/Enabling HSA

If you wish to turn the HSA system on or off, it can be done using the Customer Programmable Features in the Uconnect Settings. Refer to "Uconnect Settings" in "Multimedia" for further information.

Electronic Stability Control (ESC)

The Electronic Stability Control (ESC) system enhances directional control and stability of the vehicle under various driving conditions. ESC corrects for oversteering or understeering of the vehicle by applying the brake of the appropriate wheel to assist in counteracting the oversteering or understeering condition. Engine power may also be reduced to help the vehicle maintain the desired path. ESC uses sensors in the vehicle to determine the vehicle path intended by the driver and compares it to the actual path of the vehicle. When the actual path does not match the intended path, ESC applies the brake of the appropriate wheel to assist in counteracting the oversteer or understeer condition.

- Oversteer - when the vehicle is turning more than appropriate for the steering wheel position.
- Understeer - when the vehicle is turning less than appropriate for the steering wheel position.

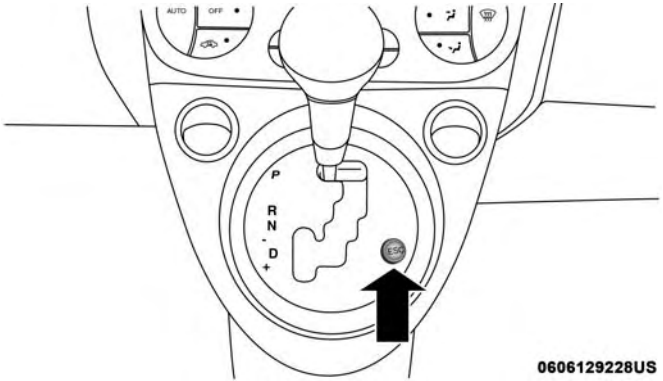

ESC Off Switch (Automatic Transmission)

DEP
DEALER ePROCESS

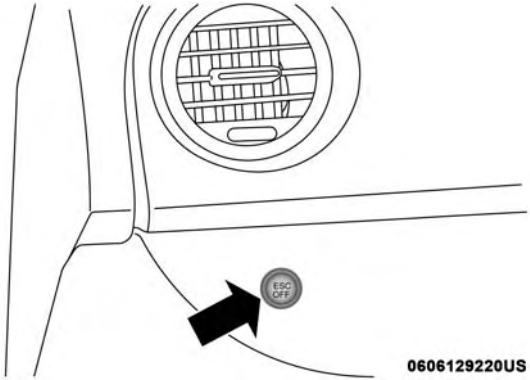

ESC Off Switch (Manual Transmission)

NOTE: The ESC Off switch is located left of the steering column (Manual Transmission Only).

WARNING!

- **The Electronic Stability Control (ESC) cannot prevent the natural laws of physics from acting on the vehicle, nor can it increase the traction afforded by prevailing road conditions. ESC cannot prevent all accidents, including those resulting from excessive speed in turns, driving on very slippery surfaces, or**

(Continued)

WARNING! *(Continued)*

hydroplaning. ESC also cannot prevent collisions resulting from loss of vehicle control due to inappropriate driver input for the conditions. Only a safe, attentive, and skillful driver can prevent accidents. The capabilities of an ESC equipped vehicle must never be exploited in a reckless or dangerous manner which could jeopardize the user's safety or the safety of others.

- **Vehicle modifications, or failure to properly maintain your vehicle, may change the handling characteristics of your vehicle, and may negatively affect the performance of the ESC system. Changes to the steering system, suspension, braking system, tire type and size or wheel size may adversely affect ESC performance. Improperly inflated and unevenly worn tires may also degrade ESC performance. Any vehicle modification or poor vehicle maintenance that reduces the effectiveness of the ESC system can increase the risk of loss of vehicle control, vehicle rollover, personal injury and death.**

DEP DEALER ePROCESS

ESC Operating Modes

The ESC system has two available operating modes.

Full On

This is the normal operating mode for ESC. Whenever the vehicle is started, the ESC system will be in On mode. This mode should be used for most driving situations. ESC should only be turned to Partial Off for specific reasons as noted below.

Partial Off

This mode is entered by momentarily pushing the ESC Off switch. This mode is intended to be used if the vehicle is in deep snow, sand or gravel conditions and more wheel spin than ESC would normally allow is required to gain traction.

To turn ESC on again, momentarily pushing the switch again. This will restore the normal ESC On mode of operation.

NOTE: To improve the vehicle's traction when driving with snow chains, or starting off in deep snow, sand or gravel, it may be desirable to switch to the Partial Off mode by pushing the switch. Once the situation requiring ESC to be switched to the Partial Off mode is overcome, turn ESC back on by momentarily pushing the switch. This may be done while the vehicle is in motion.

WARNING!

When in "Partial Off" mode, the TCS functionality of ESC (except for the limited slip feature described in the TCS section) has been disabled and the "ESC Off Indicator Light" will be illuminated. When in "Partial Off" mode, the engine power reduction of TCS is disabled, and the enhanced vehicle stability offered by the ESC system is reduced.

ESC Activation/Malfunction Indicator Light And ESC OFF Indicator Light

The ESC Activation/Malfunction Indicator Light in the instrument cluster will come on when the ignition switch is turned to the MAR (ACC/ON/RUN) position for four seconds. If the ESC Activation/Malfunction Indicator Light comes on continuously with the engine running, a malfunction has been detected in the ESC system. If this light remains on after

DEP DEALER ePROCESS

several ignition cycles, and the vehicle has been driven several miles (kilometers) at speeds greater than 30 mph (48 km/h), see your authorized dealer as soon as possible to have the problem diagnosed and corrected.

The ESC Activation/Malfunction Indicator Light (located in the instrument cluster) starts to flash as soon as the tires lose traction and the ESC system becomes active. The ESC Activation/Malfunction Indicator Light also flashes when TCS is active. If the ESC Activation/Malfunction Indicator Light begins to flash during acceleration, ease up on the accelerator and apply as little throttle as possible. Be sure to adapt your speed and driving to the prevailing road conditions.

NOTE:

- The ESC Activation/Malfunction Indicator Light and the ESC OFF Indicator Light come on momentarily each time the ignition switch is turned ON.
- Each time the ignition is turned ON, the ESC system will be ON even if it was turned off previously.

ESC OFF The ESC OFF Indicator Light indicates the Electronic Stability Control (ESC) is partially off.

AUXILIARY DRIVING SYSTEMS

Tire Pressure Monitoring System (TPMS)

The Tire Pressure Monitor System (TPMS) will warn the driver of a low tire pressure based on the vehicle recommended cold tire pressure.

The tire pressure will vary with temperature by about 1 psi (7 kPa) for every 12°F (6.5°C). This means that when the outside temperature decreases, the tire pressure will decrease. Tire pressure should always be set based on cold inflation tire pressure. This is defined as the tire pressure after the vehicle has not been driven for at least three hours, or driven less than 1 mile (1.6 km) after a three hour period. The cold tire inflation pressure must not exceed the maximum inflation pressure molded into the tire sidewall. Refer to “Tires – General Information” in “Servicing And Maintenace” for information on how to properly inflate the vehicle’s tires. The tire pressure will also increase as the vehicle is driven, this is normal and there should be no adjustment for this increased pressure.

The TPMS will warn the driver of a low tire pressure if the tire pressure falls below the low pressure warning limit for any reason, including low temperature effects, or natural pressure loss through the tire.

DEP DEALER ePROCESS

The TPMS will continue to warn the driver of low tire pressure as long as the condition exists, and will not turn off until the tire pressure is at or above the recommended cold tire pressure on the placard. Once the low tire pressure warning (Tire Pressure Monitoring System Warning Light) illuminates, you must increase the tire pressure to the recommended cold tire pressure in order for the Tire Pressure Monitoring System Warning Light to turn off. The system will automatically update and the Tire Pressure Monitoring System Warning Light will turn off once the system receives the updated tire pressures. The vehicle may need to be driven for up to 20 minutes above 15 mph (24 km/h) in order for the TPMS to receive this information.

For example, your vehicle may have a recommended cold (parked for more than three hours) tire pressure of 30 psi (207 kPa). If the ambient temperature is 68°F (20°C) and the measured tire pressure is 27 psi (186 kPa), a temperature drop to 20°F (-7°C) will decrease the tire pressure to approximately 23 psi (159 kPa). This tire pressure is sufficiently low enough to turn on the Tire Pressure Monitoring System Warning Light. Driving the vehicle may cause the tire pressure to rise to approximately 27 psi (186 kPa), but the Tire Pressure Monitoring System Warning Light will still be on. In this situation, the Tire Pressure Monitoring System Warning Light will turn off only after the tires are inflated to the vehicle's recommended cold tire pressure value.

CAUTION!

- **The TPMS has been optimized for the original equipment tires and wheels. TPMS pressures and warnings have been established for the tire size equipped on your vehicle. Undesirable system operation or sensor damage may result when using replacement equipment that is not of the same size, type, and/or style. Aftermarket wheels can cause sensor damage. Using aftermarket tire sealants may cause the Tire Pressure Monitoring System (TPMS) sensor to become inoperable. After using an aftermarket tire sealant it is recommended that you take your vehicle to an authorized dealership to have your sensor function checked.**
- **After inspecting or adjusting the tire pressure, always reinstall the valve stem cap. This will prevent moisture and dirt from entering the valve stem, which could damage the Tire Pressure Monitoring Sensor.**

DEP DEALER ePROCESS

NOTE:

- The TPMS is not intended to replace normal tire care and maintenance, or to provide warning of a tire failure or condition.
- The TPMS should not be used as a tire pressure gauge while adjusting your tire pressure.
- Driving on a significantly under-inflated tire causes the tire to overheat and can lead to tire failure. Under-inflation also reduces fuel efficiency and tire tread life, and may affect the vehicle's handling and stopping ability.
- The TPMS is not a substitute for proper tire maintenance, and it is the driver's responsibility to maintain correct tire pressure using an accurate tire gauge, even if under-inflation has not reached the level to trigger illumination of the Tire Pressure Monitoring System Warning Light.
- Seasonal temperature changes will affect tire pressure, and the TPMS will monitor the actual tire pressure in the tire.

TPM System With Comfort Cluster

This is the TPMS warning indicator located in the instrument cluster.

The TPMS uses wireless technology with wheel rim mounted electronic sensors to monitor tire pressure levels. Sensors, mounted to each wheel as part of the valve stem, transmit tire pressure readings to the Receiver Module.

NOTE: It is particularly important for you to check the tire pressure in all of the tires on your vehicle regularly and to maintain the proper pressure.

The TPMS consists of the following components:

- Receiver Module
- Four Tire Pressure Monitoring Sensors
- Tire Pressure Monitoring System Warning Light
- Text Message Display

Tire Pressure Monitoring Low Pressure Warnings

The Tire Pressure Monitoring System Warning Light will illuminate in the instrument cluster, an audible chime will be activated, and the "Low inflation pressure left or right front/rear tire" text message will display when one or more of the four active road tire pressures are low. Should

DEP DEALER ePROCESS

this occur, you should stop as soon as possible, check the inflation pressure of each tire on your vehicle, and inflate each tire to the vehicle's recommended cold placard pressure value. The system will automatically update and the Tire Pressure Monitoring Light will extinguish once the updated tire pressures have been received. The vehicle may need to be driven for up to 20 minutes above 15 mph (24 km/h) to receive this information.

TPMS Warnings

The Tire Pressure Monitoring System Warning Light will flash on and off for 75 seconds and remain on solid when a system fault is detected, an audible chime will be activated and the "Service Tire Pressure Monitoring System" text message will display. If the ignition key is cycled, this sequence will repeat providing the system fault still exists. The Tire Pressure Monitoring System Warning Light will turn off when the fault condition no longer exists. A system fault can occur with any of the following scenarios:

- Jamming due to electronic devices or driving next to facilities emitting the same radio frequencies as the TPM sensors.
- Installing some form of aftermarket window tinting that affects radio wave signals.
- Snow or ice around the wheels or wheel housings.
- Using tire chains on the vehicle.
- Using wheels/tires not equipped with TPM sensors.

NOTE: Your vehicle may be equipped with a compact spare wheel and tire assembly.

- The compact spare tire does not have a tire pressure monitoring sensor. Therefore, the TPMS will not monitor the tire pressure in the compact spare tire.
- If you install the compact spare tire in place of a road tire that has a pressure below the low-pressure warning limit, upon the next ignition key cycle, a chime will sound, the Tire Pressure Monitoring System Warning Light and the Low inflation pressure left or right front / rear tire message will still turn ON due to the low tire.
- However, after driving the vehicle for up to 20 minutes above 15 mph (24 km/h), the Tire Pressure Monitoring System Warning Light will flash on and off for 75 seconds and then remain on solid and the "Service Tire Pressure Monitoring System" message will be displayed.
- This occurs for each subsequent ignition key cycle, a chime will sound and the Tire Pressure Monitoring System Warning Light will flash on and off for 75 seconds and then remain on solid and the "Service Tire Pressure Monitoring System" message will be displayed.

DEP DEALER ePROCESS

- Once you repair or replace the original road tire and reinstall it on the vehicle in place of the compact spare tire, the TPMS will update automatically and the Tire Pressure Monitoring System Warning Light will turn OFF, as long as no tire pressure is below the low-pressure warning limit in any of the four active road tires. The vehicle may need to be driven for up to 20 minutes above 15 mph (24 km/h) in order for the TPMS to receive this information.

TPM System With (TFT) Tire Pressure Display Screen

The Tire Pressure Monitor System (TPMS) uses wireless technology with wheel rim mounted electronic sensors to monitor tire pressure levels. Sensors, mounted to each wheel as part of the valve stem, transmit tire pressure readings to the receiver module.

The TPMS consists of the following components:

- Receiver module
- Four Tire Pressure Monitoring Sensors
- Various Tire Pressure Monitoring System messages, which display in the instrument cluster
- Tire Pressure Monitoring System Warning Light

Tire Pressure Monitoring Low Pressure Warnings

The Tire Pressure Monitoring System Warning Light will illuminate in the instrument cluster and a chime will sound when tire pressure is low in one or more of the four active road tires. In addition, the instrument cluster will display a low pressure text message and a graphic showing the low tire pressure tire highlighted in a different color.

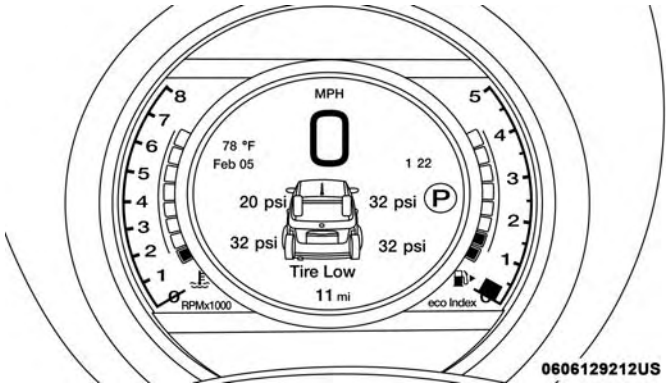

Low Tire Indicator

DEP
DEALER ePROCESS

Should this occur, you should stop as soon as possible and inflate the tires with low pressure to the vehicle's recommended cold placard pressure value. Once the system receives the updated tire pressures, the system will automatically update and the Tire Pressure Monitoring System Warning Light will turn off. The vehicle may need to be driven for up to 20 minutes above 15 mph (24 km/h) in order for the TPMS to receive this information.

TPMS Warning

When a system fault is detected, the Tire Pressure Monitoring System Warning Light will flash on and off for 75 seconds and then remain on solid. The system fault will sound a chime and also display a "Service Tire Pressure Monitoring System" message in the instrument cluster for approximately 5 seconds.

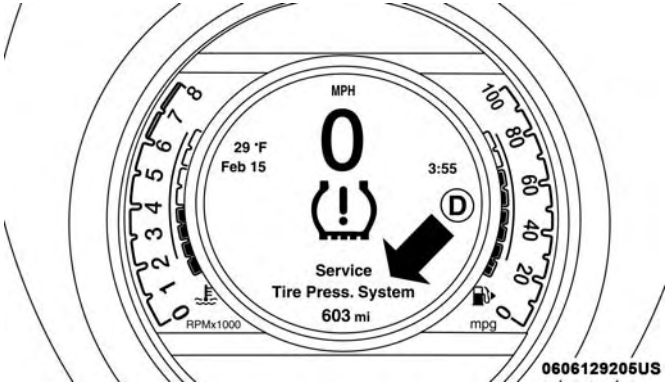

Service TPM System Message

If the ignition switch is cycled, this sequence will repeat, providing the system fault still exists. If the system fault no longer exists, the Tire Pressure Monitoring System Warning Light will no longer flash, and the "Service Tire Pressure Monitoring System" message will no longer display.

A system fault can occur due to any of the following:

1. Signal interference due to electronic devices or driving next to facilities emitting the same radio frequencies as the TPM sensors.
2. Installing aftermarket window tinting that contains materials that may block radio wave signals.

DEP DEALER ePROCESS

3. Accumulation of snow or ice around the wheels or wheel housings.
4. Using tire chains on the vehicle.
5. Using wheels/tires not equipped with TPM sensors.

NOTE:

- The TPMS will not monitor the pressure in a replacement tire installed without a tire pressure sensor.
- If you install a replacement tire in place of a road tire that has a pressure below the low-pressure warning limit, upon the next ignition switch cycle, the Tire Pressure Monitoring System Warning Light will remain on and a chime will sound. In addition, the graphic in the instrument cluster will still display a low pressure message and a tire highlighted in a different color.
- After driving the vehicle for up to 20 minutes above 15 mph (24 km/h), the Tire Pressure Monitoring System Warning Light will flash on and off for 75 seconds and then remain on solid. In addition, the instrument cluster will display a "Service TPM System" message.
- For each subsequent ignition switch cycle, a chime will sound, the Tire Pressure Monitoring System Warning Light will flash on and off for 75 seconds and then remain on solid, and the instrument cluster will display a "Service Tire Pressure Monitoring System" message.

Once you repair or replace the original road tire and reinstall it, the TPMS will update automatically. In addition, the Tire Pressure Monitoring System Warning Light will turn off as long as no tire pressure is below the low-pressure warning limit in any of the four active road tires. The vehicle may need to be driven for up to 20 minutes above 15 mph (24 km/h) in order for the TPMS to receive this information.

General Information

This device complies with Part 15 of the FCC rules and RSS 210 of Industry Canada. Operation is subject to the following conditions:

1. This device may not cause harmful interference.
2. This device must accept any interference received, including interference that may cause undesired operation.

NOTE: Changes or modifications not expressly approved by the party responsible for compliance could void the user's authority to operate the equipment.

DEP DEALER ePROCESS

OCCUPANT RESTRAINT SYSTEMS

Some of the most important safety features in your vehicle are the restraint systems:

Occupant Restraint Systems Features

- Seat Belt Systems
- Supplemental Restraint Systems (SRS) Air Bags
- Child Restraints

Some of the safety features described in this section may be standard equipment on some models, or may be optional equipment on others. If you are not sure, ask an authorized dealer.

Important Safety Precautions

Please pay close attention to the information in this section. It tells you how to use your restraint system properly, to keep you and your passengers as safe as possible.

Here are some simple steps you can take to minimize the risk of harm from a deploying air bag:

1. Children 12 years old and under should always ride buckled up in the rear seat of a vehicle with a rear seat.
2. If a child from 2 to 12 years old (not in a rear-facing child restraint) must ride in the front passenger seat, move the seat as far back as possible and use the proper child restraint (refer to “Child Restraints” in this section for further information).
3. Children that are not big enough to wear the vehicle seat belt properly (refer to “Child Restraints” in this section for further information) should be secured in the rear seat of a vehicle with a rear seat in child restraints or belt-positioning booster seats. Older children who do not use child restraints or belt-positioning booster seats should ride properly buckled up in the rear seat of a vehicle with a rear seat.
4. Never allow children to slide the shoulder belt behind them or under their arm.
5. You should read the instructions provided with your child restraint to make sure that you are using it properly.
6. All occupants should always wear their lap and shoulder belts properly.

DEP DEALER ePROCESS

7. The driver and front passenger seats should be moved back as far as practical to allow the front air bags room to inflate.
8. Do not lean against the door or window. If your vehicle has side air bags, and deployment occurs, the side air bags will inflate forcefully into the space between occupants and the door and occupants could be injured.
9. If the air bag system in this vehicle needs to be modified to accommodate a disabled person, refer to the "Customer Assistance" section for customer service contact information.

WARNING!

- **Never place a rear-facing child restraint in front of an air bag. A deploying passenger front air bag can cause death or serious injury to a child 12 years or younger, including a child in a rear-facing child restraint.**
- **Only use a rear-facing child restraint in the rear seat of a vehicle with a rear seat.**

Seat Belt Systems

Buckle up even though you are an excellent driver, even on short trips. Someone on the road may be a poor driver and could cause a collision that includes you. This can happen far away from home or on your own street.

Research has shown that seat belts save lives, and they can reduce the seriousness of injuries in a collision. Some of the worst injuries happen when people are thrown from the vehicle. Seat belts reduce the possibility of ejection and the risk of injury caused by striking the inside of the vehicle. Everyone in a motor vehicle should be belted at all times.

Enhanced Seat Belt Use Reminder System (BeltAlert)

Driver and Passenger BeltAlert (if equipped)

BeltAlert is a feature intended to remind the driver and outboard front seat passenger (if equipped with outboard front passenger seat BeltAlert) to buckle their seat belts. The Belt Alert feature is active whenever the ignition switch is in the START or ON/RUN position.

Initial Indication

If the driver is unbuckled when the ignition switch is first in the START or ON/RUN position, a chime will signal for

DEP DEALER ePROCESS

a few seconds. If the driver or outboard front seat passenger (if equipped with outboard front passenger seat BeltAlert) is unbuckled when the ignition switch is first in the START or ON/RUN position the Seat Belt Reminder Light will turn on and remain on until both outboard front seat belts are buckled. The outboard front passenger seat BeltAlert is not active when an outboard front passenger seat is unoccupied.

BeltAlert Warning Sequence

The BeltAlert warning sequence is activated when the vehicle is moving above a specified vehicle speed range and the driver or outboard front seat passenger is unbuckled (if equipped with outboard front passenger seat BeltAlert) (the outboard front passenger seat BeltAlert is not active when the outboard front passenger seat is unoccupied). The BeltAlert warning sequence starts by blinking the Seat Belt Reminder Light and sounding an intermittent chime. Once the BeltAlert warning sequence has completed, the Seat Belt Reminder Light will remain on until the seat belts are buckled. The BeltAlert warning sequence may repeat based on vehicle speed until the driver and occupied outboard front seat passenger seat belts are buckled. The driver should instruct all occupants to buckle their seat belts.

Change of Status

If the driver or outboard front seat passenger (if equipped with outboard front passenger seat BeltAlert) unbuckles their seat belt while the vehicle is traveling, the BeltAlert warning sequence will begin until the seat belts are buckled again.

The outboard front passenger seat BeltAlert is not active when the outboard front passenger seat is unoccupied. BeltAlert may be triggered when an animal or other items are placed on the outboard front passenger seat or when the seat is folded flat (if equipped). It is recommended that pets be restrained in the rear seat (if equipped) in pet harnesses or pet carriers that are secured by seat belts, and cargo is properly stowed.

BeltAlert can be activated or deactivated by an authorized dealer. FCA US LLC does not recommend deactivating BeltAlert.

NOTE: If BeltAlert has been deactivated and the driver or outboard front seat passenger (if equipped with outboard front passenger seat BeltAlert) is unbuckled the Seat Belt Reminder Light will turn on and remain on until the driver and outboard front seat passenger seat belts are buckled.

DEP
DEALER ePROCESS

Lap/Shoulder Belts

All seating positions in your vehicle are equipped with lap/shoulder belts.

The seat belt webbing retractor will lock only during very sudden stops or collisions. This feature allows the shoulder part of the seat belt to move freely with you under normal conditions. However, in a collision the seat belt will lock and reduce your risk of striking the inside of the vehicle or being thrown out of the vehicle.

WARNING!

- **Relying on the air bags alone could lead to more severe injuries in a collision. The air bags work with your seat belt to restrain you properly. In some collisions, the air bags won't deploy at all. Always wear your seat belt even though you have air bags.**
- **In a collision, you and your passengers can suffer much greater injuries if you are not properly buckled up. You can strike the interior of your vehicle or other passengers, or you can be thrown out of the vehicle. Always be sure you and others in your vehicle are buckled up properly.**

(Continued)

WARNING! ***(Continued)***

- **It is dangerous to ride in a cargo area, inside or outside of a vehicle. In a collision, people riding in these areas are more likely to be seriously injured or killed.**
- **Do not allow people to ride in any area of your vehicle that is not equipped with seats and seat belts.**
- **Be sure everyone in your vehicle is in a seat and using a seat belt properly. Occupants, including the driver, should always wear their seat belts whether or not an air bag is also provided at their seating position to minimize the risk of severe injury or death in the event of a crash.**
- **Wearing your seat belt incorrectly could make your injuries in a collision much worse. You might suffer internal injuries, or you could even slide out of the seat belt. Follow these instructions to wear your seat belt safely and to keep your passengers safe, too.**
- **Two people should never be belted into a single seat belt. People belted together can crash into one another in a collision, hurting one another badly. Never use a lap/shoulder belt or a lap belt for more than one person, no matter what their size.**

DEALER ePROCESS

WARNING!

- A lap belt worn too high can increase the risk of injury in a collision. The seat belt forces won't be at the strong hip and pelvic bones, but across your abdomen. Always wear the lap part of your seat belt as low as possible and keep it snug.
- A twisted seat belt may not protect you properly. In a collision, it could even cut into you. Be sure the seat belt is flat against your body, without twists. If you can't straighten a seat belt in your vehicle, take it to an authorized dealer immediately and have it fixed.
- A seat belt that is buckled into the wrong buckle will not protect you properly. The lap portion could ride too high on your body, possibly causing internal injuries. Always buckle your seat belt into the buckle nearest you.
- A seat belt that is too loose will not protect you properly. In a sudden stop, you could move too far forward, increasing the possibility of injury. Wear your seat belt snugly.

(Continued)

WARNING! *(Continued)*

- A seat belt that is worn under your arm is dangerous. Your body could strike the inside surfaces of the vehicle in a collision, increasing head and neck injury. A seat belt worn under the arm can cause internal injuries. Ribs aren't as strong as shoulder bones. Wear the seat belt over your shoulder so that your strongest bones will take the force in a collision.
- A shoulder belt placed behind you will not protect you from injury during a collision. You are more likely to hit your head in a collision if you do not wear your shoulder belt. The lap and shoulder belt are meant to be used together.
- A frayed or torn seat belt could rip apart in a collision and leave you with no protection. Inspect the seat belt system periodically, checking for cuts, frays, or loose parts. Damaged parts must be replaced immediately. Do not disassemble or modify the seat belt system. Seat belt assemblies must be replaced after a collision.

DEP
DEALER ePROCESS

Lap/Shoulder Belt Operating Instructions

1. Enter the vehicle and close the door. Sit back and adjust the seat.
2. The seat belt latch plate is above the back of the front seat, and next to your arm in the rear seat (for vehicles equipped with a rear seat). Grasp the latch plate and pull out the seat belt. Slide the latch plate up the webbing as far as necessary to allow the seat belt to go around your lap.

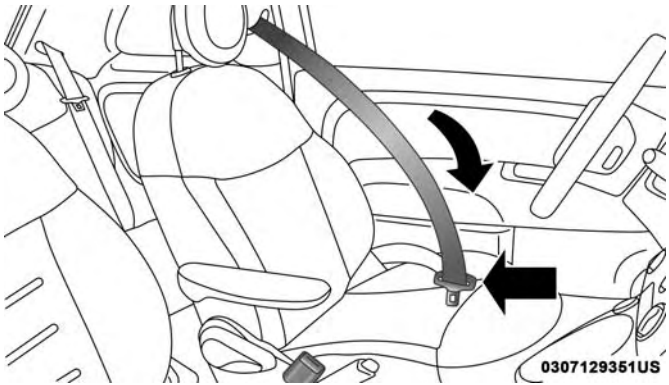

Pulling Out The Latch Plate

3. When the seat belt is long enough to fit, insert the latch plate into the buckle until you hear a "click."

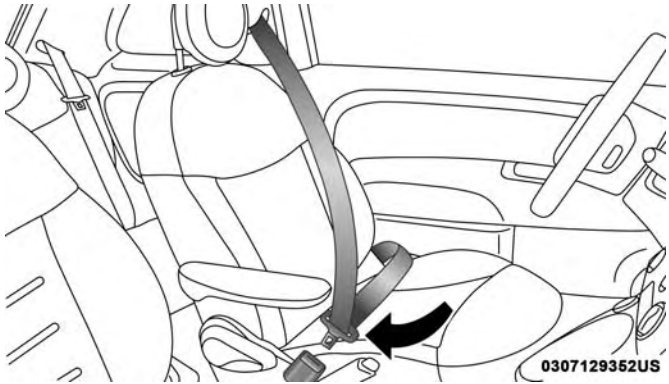

Inserting Latch Plate Into Buckle

4. Position the lap belt so that it is snug and lies low across your hips, below your abdomen. To remove slack in the lap belt portion, pull up on the shoulder belt. To loosen the lap belt if it is too tight, tilt the latch plate and pull on the lap belt. A snug seat belt reduces the risk of sliding under the seat belt in a collision.

DEP
DEALER ePROCESS

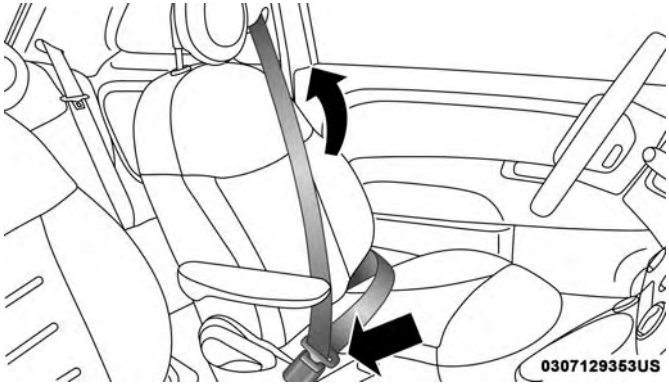

Positioning The Lap Belt

5. Position the shoulder belt across the shoulder and chest with minimal, if any slack so that it is comfortable and not resting on your neck. The retractor will withdraw any slack in the shoulder belt.

6. To release the seat belt, push the red button on the buckle. The seat belt will automatically retract to its stowed position. If necessary, slide the latch plate down the webbing to allow the seat belt to retract fully.

Lap/Shoulder Belt Untwisting Procedure

Use the following procedure to untwist a twisted lap/shoulder belt.

1. Position the latch plate as close as possible to the anchor point.

2. At about 6 to 12 inches (15 to 30 cm) above the latch plate, grasp and twist the seat belt webbing 180 degrees to create a fold that begins immediately above the latch plate.

3. Slide the latch plate upward over the folded webbing. The folded webbing must enter the slot at the top of the latch plate.

4. Continue to slide the latch plate up until it clears the folded webbing and the seat belt is no longer twisted.

Seat Belt Extender

If a seat belt is not long enough to fit properly, even when the webbing is fully extended and the adjustable upper shoulder belt anchorage (if equipped) is in its lowest position, an authorized dealer can provide you with a Seat

DEP DEALER ePROCESS

Belt Extender. The Seat Belt Extender should be used only if the existing seat belt is not long enough. When the Seat Belt Extender is not required for a different occupant, it must be removed.

WARNING!

- **ONLY use a Seat Belt Extender if it is physically required in order to properly fit the original seat belt system. DO NOT USE the Seat Belt Extender if, when worn, the distance between the front edge of the Seat Belt Extender buckle and the center of the occupant's body is LESS than 6 inches.**
- **Using a Seat Belt Extender when not needed can increase the risk of serious injury or death in a collision. Only use the Seat Belt Extender when the lap belt is not long enough and only use in the recommended seating positions. Remove and store the Seat Belt Extender when not needed.**

Seat Belts And Pregnant Women

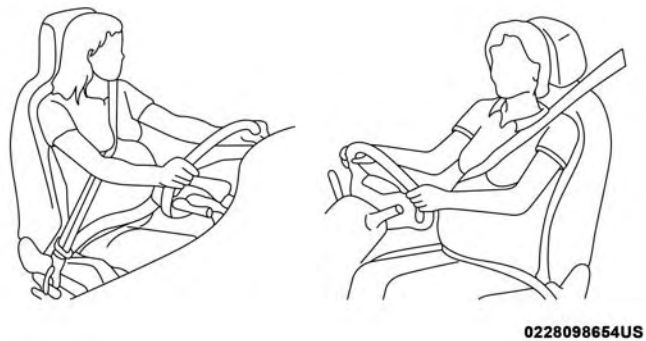

Pregnant Women And Seat Belts

Seat belts must be worn by all occupants including pregnant women: the risk of injury in the event of an accident is reduced for the mother and the unborn child if they are wearing a seat belt.

Position the lap belt snug and low below the abdomen and across the strong bones of the hips. Place the shoulder belt across the chest and away from the neck. Never place the shoulder belt behind the back or under the arm.

DEP DEALER ePROCESS

Seat Belt Pretensioner

The front seat belt system is equipped with pretensioning devices that are designed to remove slack from the seat belt in the event of a collision. These devices may improve the performance of the seat belt by removing slack from the seat belt early in a collision. Pretensioners work for all size occupants, including those in child restraints.

NOTE: These devices are not a substitute for proper seat belt placement by the occupant. The seat belt still must be worn snugly and positioned properly.

The pretensioners are triggered by the Occupant Restraint Controller (ORC). Like the air bags, the pretensioners are single use items. A deployed pretensioner or a deployed air bag must be replaced immediately.

Energy Management Feature

The front seat belt system is equipped with an Energy Management feature that may help further reduce the risk of injury in the event of a collision. The seat belt system has a retractor assembly that is designed to release webbing in a controlled manner.

Switchable Automatic Locking Retractor (ALR)

The seat belts in the passenger seating positions are equipped with a Switchable Automatic Locking Retractor (ALR) which is used to secure a child restraint system. For additional information, refer to "Installing Child Restraints Using The Vehicle Seat Belt" under the "Child Restraints" section of this manual.

The figure below illustrates the locking feature for each seating position.

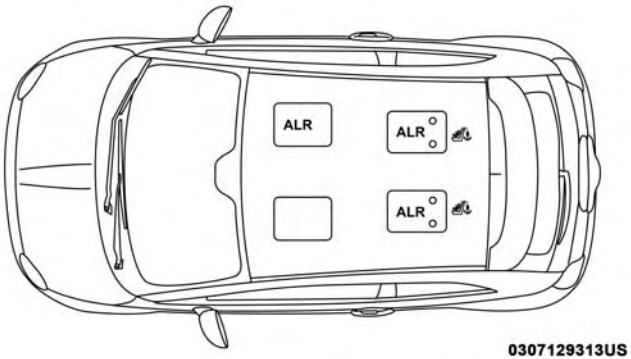

ALR — Switchable Automatic Locking Retractor

DEP
DEALER ePROCESS

If the passenger seating position is equipped with an ALR and is being used for normal usage, only pull the seat belt webbing out far enough to comfortably wrap around the occupant's mid-section so as to not activate the ALR. If the ALR is activated, you will hear a clicking sound as the seat belt retracts. Allow the webbing to retract completely in this case and then carefully pull out only the amount of webbing necessary to comfortably wrap around the occupant's mid-section. Slide the latch plate into the buckle until you hear a "click."

In Automatic Locking Mode, the shoulder belt is automatically pre-locked. The seat belt will still retract to remove any slack in the shoulder belt. Use the Automatic Locking Mode anytime a child restraint is installed in a seating position that has a seat belt with this feature. Children 12 years old and under should always be properly restrained in the rear seat of a vehicle with a rear seat.

WARNING!

- **Never place a rear-facing child restraint in front of an air bag. A deploying passenger front air bag can cause death or serious injury to a child 12 years or younger, including a child in a rear-facing child restraint.**

(Continued)

WARNING! ***(Continued)***

- **Only use a rear-facing child restraint in the rear seat of a vehicle with a rear seat.**

How To Engage The Automatic Locking Mode

1. Buckle the combination lap and shoulder belt.
2. Grasp the shoulder portion and pull downward until the entire seat belt is extracted.
3. Allow the seat belt to retract. As the seat belt retracts, you will hear a clicking sound. This indicates the seat belt is now in the Automatic Locking Mode.

How To Disengage The Automatic Locking Mode

Unbuckle the combination lap/shoulder belt and allow it to retract completely to disengage the Automatic Locking Mode and activate the vehicle sensitive (emergency) locking mode.

DEP DEALER ePROCESS

WARNING!

- **The seat belt assembly must be replaced if the switchable Automatic Locking Retractor (ALR) feature or any other seat belt function is not working properly when checked according to the procedures in the Service Manual.**
- **Failure to replace the seat belt assembly could increase the risk of injury in collisions.**
- **Do not use the Automatic Locking Mode to restrain occupants who are wearing the seat belt or children who are using booster seats. The locked mode is only used to install rear-facing or forward-facing child restraints that have a harness for restraining the child.**

Supplemental Restraint Systems (SRS)

Some of the safety features described in this section may be standard equipment on some models, or may be optional equipment on others. If you are not sure, ask an authorized dealer.

The air bag system must be ready to protect you in a collision. The Occupant Restraint Controller (ORC) monitors the internal circuits and interconnecting wiring associated with the electrical Air Bag System Components. Your vehicle may be equipped with the following Air Bag System Components:

Air Bag System Components

- Occupant Restraint Controller (ORC)
- Air Bag Warning Light
- Steering Wheel and Column
- Instrument Panel
- Knee Impact Bolsters
- Driver and Front Passenger Air Bags
- Seat Belt Buckle Switch
- Supplemental Side Air Bags
- Supplemental Knee Air Bags
- Front and Side Impact Sensors
- Seat Belt Pretensioners
- Seat Track Position Sensors

DEP DEALER ePROCESS

Air Bag Warning Light

The ORC monitors the readiness of the electronic parts of the air bag system whenever the ignition switch is in the AVV/START or MAR/ACC/ON/RUN position. If the ignition switch is in the STOP/OFF/LOCK position the air bag system is not on and the air bags will not inflate.

The ORC contains a backup power supply system that may deploy the air bag system even if the battery loses power or it becomes disconnected prior to deployment.

The ORC turns on the Air Bag Warning Light in the instrument panel for approximately four to eight seconds for a self-check when the ignition switch is in the MAR/ACC/ON/RUN position. After the self-check, the Air Bag Warning Light will turn off. If the ORC detects a malfunction in any part of the system, it turns on the Air Bag Warning Light, either momentarily or continuously. A single chime will sound to alert you if the light comes on again after initial startup.

The ORC also includes diagnostics that will illuminate the instrument panel Air Bag Warning Light if a malfunction is detected that could affect the air bag system. The diagnostics also record the nature of the malfunction. While the air bag system is designed to be maintenance free, if any of the following occurs, have an authorized dealer service the air bag system immediately.

- The Air Bag Warning Light does not come on during the four to eight seconds when the ignition switch is first in the MAR/ACC/ON/RUN position.
- The Air Bag Warning Light remains on after the four to eight-second interval.
- The Air Bag Warning Light comes on intermittently or remains on while driving.

NOTE: If the speedometer, tachometer, or any engine related gauges are not working, the Occupant Restraint Controller (ORC) may also be disabled. In this condition the air bags may not be ready to inflate for your protection. Have an authorized dealer service the air bag system immediately.

DEP
DEALER ePROCESS

WARNING!

Ignoring the Air Bag Warning Light in your instrument panel could mean you won't have the air bag system to protect you in a collision. If the light does not come on as a bulb check when the ignition is first turned on, stays on after you start the vehicle, or if it comes on as you drive, have an authorized dealer service the air bag system immediately.

Front Air Bags

This vehicle has front air bags and lap/shoulder belts for both the driver and front passenger. The front air bags are a supplement to the seat belt restraint systems. The driver front air bag is mounted in the center of the steering wheel. The passenger front air bag is mounted in the instrument panel, above the glove compartment. The words "SRS AIRBAG" or "AIRBAG" are embossed on the air bag covers.

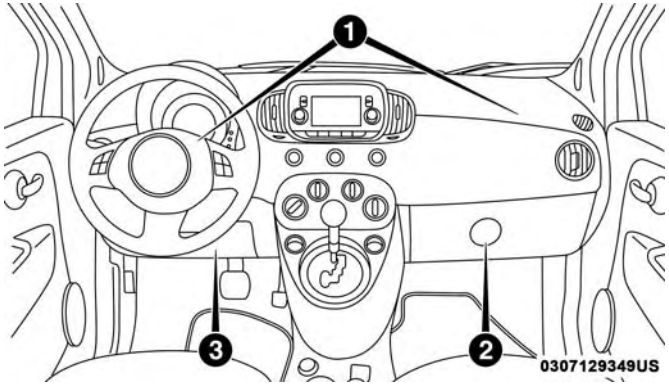

Front Air Bag/Knee Bolster Locations

1 — Driver And Passenger Front Air Bags
2 — Passenger Knee Impact Bolster
3 — Supplemental Driver Knee Air Bag/Driver Knee Impact Bolster

WARNING!

- **Being too close to the steering wheel or instrument panel during front air bag deployment could cause serious injury, including death. Air bags need room to inflate. Sit back, comfortably extending your arms to reach the steering wheel or instrument panel.**

(Continued)

DEP DEALER ePROCESS

WARNING! *(Continued)*

- **Never place a rear-facing child restraint in front of an air bag. A deploying passenger front air bag can cause death or serious injury to a child 12 years or younger, including a child in a rear-facing child restraint.**
- **Only use a rear-facing child restraint in the rear seat of a vehicle with a rear seat.**

Driver And Passenger Front Air Bag Features

The Advanced Front Air Bag system has multistage driver and front passenger air bags. This system provides output appropriate to the severity and type of collision as determined by the Occupant Restraint Controller (ORC), which may receive information from the front impact sensors (if equipped) or other system components.

The first stage inflator is triggered immediately during an impact that requires air bag deployment. A low energy output is used in less severe collisions. A higher energy output is used for more severe collisions.

This vehicle may be equipped with a driver and/or front passenger seat belt buckle switch that detects whether the driver or front passenger seat belt is buckled. The seat belt buckle switch may adjust the inflation rate of the Advanced Front Air Bags.

This vehicle may be equipped with driver and/or front passenger seat track position sensors that may adjust the inflation rate of the Advanced Front Air Bags based upon seat position.

WARNING!

- **No objects should be placed over or near the air bag on the instrument panel or steering wheel because any such objects could cause harm if the vehicle is in a collision severe enough to cause the air bag to inflate.**
- **Do not put anything on or around the air bag covers or attempt to open them manually. You may damage the air bags and you could be injured because the air bags may no longer be functional. The protective covers for the air bag cushions are designed to open only when the air bags are inflating.**
- **Relying on the air bags alone could lead to more severe injuries in a collision. The air bags work with your seat belt to restrain you properly. In some**

(Continued)

DEP DEALER ePROCESS

WARNING! *(Continued)*

collisions, air bags won't deploy at all. Always wear your seat belts even though you have air bags.

Front Air Bag Operation

Front Air Bags are designed to provide additional protection by supplementing the seat belts. Front air bags are not expected to reduce the risk of injury in rear, side, or rollover collisions. The front air bags will not deploy in all frontal collisions, including some that may produce substantial vehicle damage — for example, some pole collisions, truck underrides, and angle offset collisions.

On the other hand, depending on the type and location of impact, front air bags may deploy in crashes with little vehicle front-end damage but that produce a severe initial deceleration.

Because air bag sensors measure vehicle deceleration over time, vehicle speed and damage by themselves are not good indicators of whether or not an air bag should have deployed.

Seat belts are necessary for your protection in all collisions, and also are needed to help keep you in position, away from an inflating air bag.

When the ORC detects a collision requiring the front air bags, it signals the inflator units. A large quantity of non-toxic gas is generated to inflate the front air bags.

The steering wheel hub trim cover and the upper passenger side of the instrument panel separate and fold out of the way as the air bags inflate to their full size. The front air bags fully inflate in less time than it takes to blink your eyes. The front air bags then quickly deflate while helping to restrain the driver and front passenger.

Knee Impact Bolsters

The Knee Impact Bolsters help protect the knees of the driver and front passenger, and position the front occupants for improved interaction with the front air bags.

WARNING!

- **Do not drill, cut, or tamper with the knee impact bolsters in any way.**
- **Do not mount any accessories to the knee impact bolsters such as alarm lights, stereos, citizen band radios, etc.**

DEP DEALER ePROCESS

Supplemental Driver Knee Air Bag

This vehicle is equipped with a Supplemental Driver Knee Air Bag mounted in the instrument panel below the steering column. The Supplemental Driver Knee Air Bag provides enhanced protection during a frontal impact by working together with the seat belts, pretensioners, and front air bags.

Supplemental Side Air Bags

Supplemental Seat-Mounted Side Air Bags (SABs)

This vehicle is equipped with Supplemental Seat-Mounted Side Air Bags (SABs).

Supplemental Seat-Mounted Side Air Bags (SABs) are located in the outboard side of the front seats. The SABs are marked with "SRS AIRBAG" or "AIRBAG" on a label or on the seat trim on the outboard side of the seats.

The SABs may help to reduce the risk of occupant injury during certain side impacts, in addition to the injury reduction potential provided by the seat belts and body structure.

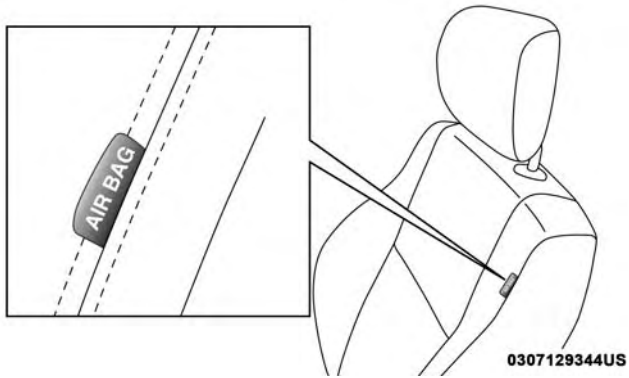

Front Supplemental Seat-Mounted Side Air Bag Label

When the SAB deploys, it opens the seam on the outboard side of the seatback's trim cover. The inflating SAB deploys through the seat seam into the space between the occupant and the door. The SAB moves at a very high speed and with such a high force that it could injure occupants if they are not seated properly, or if items are positioned in the area where the SAB inflates. Children are at an even greater risk of injury from a deploying air bag.

DEP
DEALER ePROCESS

WARNING!

Do not use accessory seat covers or place objects between you and the Side Air Bags; the performance could be adversely affected and/or objects could be pushed into you, causing serious injury.

Supplemental Side Air Bag Inflatable Curtains (SABICs)

This vehicle is equipped with Supplemental Side Air Bag Inflatable Curtains (SABICs).

Supplemental Side Air Bag Inflatable Curtains (SABICs) are located above the side windows. The trim covering the SABICs is labeled “SRS AIRBAG” or “AIRBAG.”

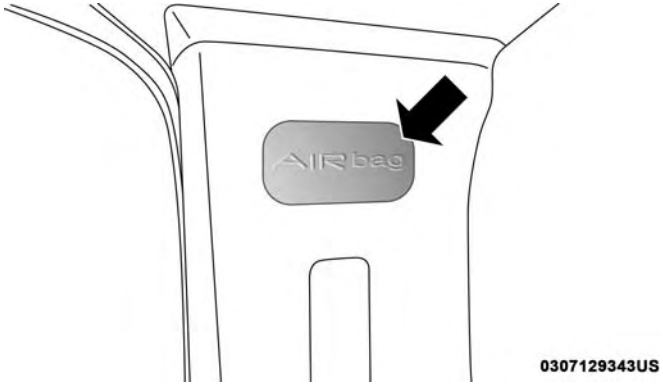

Supplemental Side Air Bag Inflatable Curtain (SABIC) Label Location

SABICs may help reduce the risk of head and other injuries to front and rear seat outboard occupants in certain side impacts, in addition to the injury reduction potential provided by the seat belts and body structure.

The SABIC deploys downward, covering the side windows. An inflating SABIC pushes the outside edge of the headliner out of the way and covers the window. The SABICs inflate with enough force to injure occupants if they are not belted and seated properly, or if items are positioned in the area where the SABICs inflate. Children are at an even greater risk of injury from a deploying air bag.

DEALER ePROCESS

The SABICs may help reduce the risk of partial or complete ejection of vehicle occupants through side windows in certain side impact events.

WARNING!

- **Do not mount equipment, or stack luggage or other cargo up high enough to block the deployment of the SABICs. The trim covering above the side windows where the SABIC and its deployment path are located should remain free from any obstructions.**
- **In order for the SABICs to work as intended, do not install any accessory items in your vehicle which could alter the roof. Do not add an aftermarket sunroof to your vehicle. Do not add roof racks that require permanent attachments (bolts or screws) for installation on the vehicle roof. Do not drill into the roof of the vehicle for any reason.**

Side Impacts

The Side Air Bags are designed to activate in certain side impacts. The Occupant Restraint Controller (ORC) determines whether the deployment of the Side Air Bags in a particular impact event is appropriate, based on the severity and type of collision. The side impact sensors aid the ORC in determining the appropriate response to impact events. The system is calibrated to deploy the Side Air Bags on the impact side of the vehicle during impacts that require Side Air Bag occupant protection. In side impacts, the Side Air Bags deploy independently; a left side impact deploys the left Side Air Bags only and a right-side impact deploys the right Side Air Bags only. Vehicle damage by itself is not a good indicator of whether or not Side Air Bags should have deployed.

The Side Air Bags will not deploy in all side collisions, including some collisions at certain angles, or some side collisions that do not impact the area of the passenger compartment. The Side Air Bags may deploy during angled or offset frontal collisions where the front air bags deploy.

DEP
DEALER ePROCESS

Side Air Bags are a supplement to the seat belt restraint system. Side Air Bags deploy in less time than it takes to blink your eyes.

WARNING!

- **Occupants, including children, who are up against or very close to Side Air Bags can be seriously injured or killed. Occupants, including children, should never lean on or sleep against the door, side windows, or area where the side air bags inflate, even if they are in an infant or child restraint.**
- **Seat belts (and child restraints where appropriate) are necessary for your protection in all collisions. They also help keep you in position, away from an inflating Side Air Bag. To get the best protection from the Side Air Bags, occupants must wear their seat belts properly and sit upright with their backs against the seats. Children must be properly restrained in a child restraint or booster seat that is appropriate for the size of the child.**

WARNING!

- **Side Air Bags need room to inflate. Do not lean against the door or window. Sit upright in the center of the seat.**
- **Being too close to the Side Air Bags during deployment could cause you to be severely injured or killed.**
- **Relying on the Side Air Bags alone could lead to more severe injuries in a collision. The Side Air Bags work with your seat belt to restrain you properly. In some collisions, Side Air Bags won't deploy at all. Always wear your seat belt even though you have Side Air Bags.**

NOTE: Air bag covers may not be obvious in the interior trim, but they will open during air bag deployment.

Rollover Events

Side Air Bags are designed to activate in certain rollover events. The ORC determines whether the deployment of the Side Air Bags in a particular rollover event is appropriate, based on the severity and type of collision. Vehicle damage by itself is not a good indicator of whether or not Side Air Bags should have deployed.

DEP DEALER ePROCESS

The Side Air Bags will not deploy in all rollover events. The rollover sensing system determines if a rollover event may be in progress and whether deployment is appropriate. In the event the vehicle experiences a rollover or near rollover event, and deployment of the Side Air Bags is appropriate, the rollover sensing system will also deploy the seat belt pretensioners on both sides of the vehicle.

The SABICs may help reduce the risk of partial or complete ejection of vehicle occupants through side windows in certain rollover or side impact events.

Air Bag System Components

NOTE: The Occupant Restraint Controller (ORC) monitors the internal circuits and interconnecting wiring associated with electrical Air Bag System Components listed below:

- Occupant Restraint Controller (ORC)
- Air Bag Warning Light
- Steering Wheel and Column
- Instrument Panel
- Knee Impact Bolsters
- Driver and Front Passenger Air Bags
- Seat Belt Buckle Switch
- Supplemental Side Air Bags
- Supplemental Knee Air Bags
- Front and Side Impact Sensors
- Seat Belt Pretensioners
- Seat Track Position Sensors

If A Deployment Occurs

The front air bags are designed to deflate immediately after deployment.

NOTE: Front and/or side air bags will not deploy in all collisions. This does not mean something is wrong with the air bag system.

If you do have a collision which deploys the air bags, any or all of the following may occur:

- The air bag material may sometimes cause abrasions and/or skin reddening to the occupants as the air bags deploy and unfold. The abrasions are similar to friction rope burns or those you might get sliding along a carpet or gymnasium floor. They are not caused by contact with chemicals. They are not permanent and normally heal quickly. However, if you haven't healed significantly within a few days, or if you have any blistering, see your doctor immediately.

DEP DEALER ePROCESS

- As the air bags deflate, you may see some smoke-like particles. The particles are a normal by-product of the process that generates the non-toxic gas used for air bag inflation. These airborne particles may irritate the skin, eyes, nose, or throat. If you have skin or eye irritation, rinse the area with cool water. For nose or throat irritation, move to fresh air. If the irritation continues, see your doctor. If these particles settle on your clothing, follow the garment manufacturer's instructions for cleaning.

Do not drive your vehicle after the air bags have deployed. If you are involved in another collision, the air bags will not be in place to protect you.

WARNING!

Deployed air bags and seat belt pretensioners cannot protect you in another collision. Have the air bags, seat belt pretensioners, and the seat belt retractor assemblies replaced by an authorized dealer immediately. Also, have the Occupant Restraint Controller System serviced as well.

NOTE:

- Air bag covers may not be obvious in the interior trim, but they will open during air bag deployment.
- After any collision, the vehicle should be taken to an authorized dealer immediately.

Enhanced Accident Response System

In the event of an impact, if the communication network remains intact, and the power remains intact, depending on the nature of the event, the ORC will determine whether to have the Enhanced Accident Response System perform the following functions:

- Cut off fuel to the engine (If Equipped)
- Cut off battery power to the electric motor (If Equipped)
- Flash hazard lights as long as the battery has power
- Turn on the interior lights, which remain on as long as the battery has power or for 15 minutes from the intervention of the Enhanced Accident Response System.
- Unlock the power door locks.

DEP DEALER ePROCESS

Your vehicle may also be designed to perform any of these other functions in response to the Enhanced Accident Response System:

- Turn off the Fuel Filter Heater, Turn off the HVAC Blower Motor, Close the HVAC Circulation Door
- Cut off battery power to the:
  - Engine
  - Electric Motor (if equipped)
  - Electric power steering
  - Brake booster
  - Electric park brake
  - Automatic transmission gear selector
  - Horn
  - Front wiper
  - Headlamp washer pump

NOTE: After an accident, remember to cycle the ignition to the STOP (OFF/LOCK) position and remove the key from the ignition switch to avoid draining the battery. Carefully check the vehicle for fuel leaks in the engine compartment and on the ground near the engine compartment and fuel tank before resetting the system and starting the engine. If there are no fuel leaks or damage to the vehicle electrical devices (e.g. headlights) after an accident, reset the system by following the procedure described below. If you have any doubt, contact an authorized dealer.

Enhanced Accident Response System Reset Procedure

After the event occurs, when the system is active, a message regarding fuel cutoff is displayed. Turn the ignition switch from ignition AVV/START or MAR/ACC/ON/RUN to ignition STOP/OFF/LOCK. Carefully check the vehicle for fuel leaks in the engine compartment and on the ground near the engine compartment and fuel tank before resetting the system and starting the engine.

Depending on the nature of the event the left and right turn signal lights, located in the instrument panel, may both be blinking and will continue to blink. In order to move your vehicle to the side of the road, you must follow the system reset procedure.

DEP
DEALER ePROCESS

Customer Action	Customer Will See **NOTE:** Each step MUST BE held for at least two seconds
1. Turn ignition STOP/OFF/LOCK. (Turn Signal Switch Must be placed in Neutral State).	
2. Turn ignition MAR/ACC/ON/RUN.	Right turn light BLINKS. Left turn light is OFF.
3. Turn right turn signal switch ON.	Right turn light is ON SOLID. Left turn light BLINKS.
4. Place turn signal in neutral state.	Right turn light is OFF. Left turn light BLINKS.
5. Turn left turn signal switch ON.	Right turn light BLINKS. Left turn light is ON SOLID.
6. Place turn signal in neutral state.	Right turn light BLINKS. Left turn light is OFF.

Customer Action	Customer Will See **NOTE:** Each step MUST BE held for at least two seconds
7. Turn right turn signal switch ON.	Right turn light is ON SOLID. Left turn light BLINKS.
8. Place turn signal in neutral state.	Right turn light is OFF. Left turn light BLINKS.
9. Turn left turn signal switch ON.	Right turn light is ON SOLID. Left turn light is ON SOLID.
10. Turn left turn signal switch OFF. (Turn Signal Switch Must be placed in Neutral State).	Right turn light is OFF. Left turn light is OFF.
11. Turn ignition STOP/OFF/LOCK.	

DEP DEALER ePROCESS

Customer Action	Customer Will See **NOTE:** Each step MUST BE held for at least two seconds
12. Turn ignition MAR/ACC/ON/RUN. (Entire sequence needs to be completed within one minute or sequence will need to be repeated).	System is now reset and the engine may be started.
Turn hazard flashers OFF (Manually).	

If a reset procedure step is not completed within 60 seconds, then the turn signal lights will blink and the reset procedure must be performed again in order to be successful.

Maintaining Your Air Bag System

WARNING!

- **Modifications to any part of the air bag system could cause it to fail when you need it. You could be injured if the air bag system is not there to protect**

(Continued)

WARNING! *(Continued)*

you. Do not modify the components or wiring, including adding any kind of badges or stickers to the steering wheel hub trim cover or the upper passenger side of the instrument panel. Do not modify the front bumper, vehicle body structure, or add aftermarket side steps or running boards.

- **It is dangerous to try to repair any part of the air bag system yourself. Be sure to tell anyone who works on your vehicle that it has an air bag system.**
- **Do not attempt to modify any part of your air bag system. The air bag may inflate accidentally or may not function properly if modifications are made. Take your vehicle to an authorized dealer for any air bag system service. If your seat, including your trim cover and cushion, needs to be serviced in any way (including removal or loosening/tightening of seat attachment bolts), take the vehicle to an authorized dealer. Only manufacturer approved seat accessories may be used. If it is necessary to modify the air bag system for persons with disabilities, contact an authorized dealer.**

DEP DEALER ePROCESS

Event Data Recorder (EDR)

This vehicle is equipped with an event data recorder (EDR). The main purpose of an EDR is to record, in certain crash or near crash-like situations, such as an air bag deployment or hitting a road obstacle, data that will assist in understanding how a vehicle's systems performed. The EDR is designed to record data related to vehicle dynamics and safety systems for a short period of time, typically 30 seconds or less. The EDR in this vehicle is designed to record such data as:

- How various systems in your vehicle were operating;
- Whether or not the driver and passenger safety belts were buckled/fastened;
- How far (if at all) the driver was depressing the accelerator and/or brake pedal; and,
- How fast the vehicle was traveling.

These data can help provide a better understanding of the circumstances in which crashes and injuries occur.

NOTE: EDR data are recorded by your vehicle only if a non-trivial crash situation occurs; no data are recorded by the EDR under normal driving conditions and no personal data (e.g., name, gender, age, and crash location) are recorded. However, other parties, such as law enforcement, could combine the EDR data with the type of personally identifying data routinely acquired during a crash investigation.

To read data recorded by an EDR, special equipment is required, and access to the vehicle or the EDR is needed. In addition to the vehicle manufacturer, other parties, such as law enforcement, that have the special equipment, can read the information if they have access to the vehicle or the EDR.

Child Restraints

Everyone in your vehicle needs to be buckled up at all times, including babies and children. Every state in the United States, and every Canadian province, requires that small children ride in proper restraint systems. This is the law, and you can be prosecuted for ignoring it.

DEP
DEALER ePROCESS

Children 12 years or younger should ride properly buckled up in a rear seat, if available. According to crash statistics, children are safer when properly restrained in the rear seats rather than in the front.

WARNING!

In a collision, an unrestrained child can become a projectile inside the vehicle. The force required to hold even an infant on your lap could become so great that you could not hold the child, no matter how strong you are. The child and others could be badly injured or killed. Any child riding in your vehicle should be in a proper restraint for the child's size.

There are different sizes and types of restraints for children from newborn size to the child almost large enough for an adult safety belt. Always check the child seat Owner's Manual to make sure you have the correct seat for your child. Carefully read and follow all the instructions and warnings in the child restraint Owner's Manual and on all the labels attached to the child restraint.

Before buying any restraint system, make sure that it has a label certifying that it meets all applicable Safety Standards. You should also make sure that you can install it in the vehicle where you will use it.

NOTE:

- For additional information, refer to http://www.nhtsa.gov/parents-and-caregivers or call: 1–888–327–4236
- Canadian residents should refer to Transport Canada's website for additional information: http://www.tc.gc.ca/eng/motorvehiclesafety/safedrivers-childsafety-index-53.htm

DEP DEALER ePROCESS

Summary Of Recommendations For Restraining Children In Vehicles

	Child Size, Height, Weight Or Age	Recommended Type Of Child Restraint
Infants and Toddlers	Children who are two years old or younger and who have not reached the height or weight limits of their child restraint	Either an Infant Carrier or a Convertible Child Restraint, facing rearward in the rear seat of the vehicle
Small Children	Children who are at least two years old or who have outgrown the height or weight limit of their rear-facing child restraint	Forward-Facing Child Restraint with a five-point Harness, facing forward in the rear seat of the vehicle
Larger Children	Children who have outgrown their forward-facing child restraint, but are too small to properly fit the vehicle's seat belt	Belt Positioning Booster Seat and the vehicle seat belt, seated in the rear seat of the vehicle
Children Too Large for Child Restraints	Children 12 years old or younger, who have outgrown the height or weight limit of their booster seat	Vehicle Seat Belt, seated in the rear seat of the vehicle

DEP DEALER ePROCESS

Infant And Child Restraints

Safety experts recommend that children ride rear-facing in the vehicle until they are two years old or until they reach either the height or weight limit of their rear-facing child restraint. Two types of child restraints can be used rear-facing: infant carriers and convertible child seats.

The infant carrier is only used rear-facing in the vehicle. It is recommended for children from birth until they reach the weight or height limit of the infant carrier. Convertible child seats can be used either rear-facing or forward-facing in the vehicle. Convertible child seats often have a higher weight limit in the rear-facing direction than infant carriers do, so they can be used rear-facing by children who have outgrown their infant carrier but are still less than at least two years old. Children should remain rear-facing until they reach the highest weight or height allowed by their convertible child seat.

WARNING!

- **Never place a rear-facing child restraint in front of an air bag. A deploying passenger front air bag can cause death or serious injury to a child 12 years or**

(Continued)

WARNING! *(Continued)*

younger, including a child in a rear-facing child restraint.
- **Only use a rear-facing child restraint in the rear seat of a vehicle with a rear seat.**

Older Children And Child Restraints

Children who are two years old or who have outgrown their rear-facing convertible child seat can ride forward-facing in the vehicle. Forward-facing child seats and convertible child seats used in the forward-facing direction are for children who are over two years old or who have outgrown the rear-facing weight or height limit of their rear-facing convertible child seat. Children should remain in a forward-facing child seat with a harness for as long as possible, up to the highest weight or height allowed by the child seat.

All children whose weight or height is above the forward-facing limit for the child seat should use a belt-positioning booster seat until the vehicle's seat belts fit properly. If the child cannot sit with knees bent over the vehicle's seat cushion while the child's back is against the seatback, they

DEALER ePROCESS

should use a belt-positioning booster seat. The child and belt-positioning booster seat are held in the vehicle by the seat belt.

WARNING!

- **Improper installation can lead to failure of an infant or child restraint. It could come loose in a collision. The child could be badly injured or killed. Follow the child restraint manufacturer's directions exactly when installing an infant or child restraint.**
- **After a child restraint is installed in the vehicle, do not move the vehicle seat forward or rearward because it can loosen the child restraint attachments. Remove the child restraint before adjusting the vehicle seat position. When the vehicle seat has been adjusted, reinstall the child restraint.**
- **When your child restraint is not in use, secure it in the vehicle with the seat belt or LATCH anchorages, or remove it from the vehicle. Do not leave it loose in the vehicle. In a sudden stop or accident, it could strike the occupants or seatbacks and cause serious personal injury.**

Children Too Large For Booster Seats

Children who are large enough to wear the shoulder belt comfortably, and whose legs are long enough to bend over the front of the seat when their back is against the seatback, should use the seat belt in a rear seat. Use this simple 5-step test to decide whether the child can use the vehicle's seat belt alone:

1. Can the child sit all the way back against the back of the vehicle seat?
2. Do the child's knees bend comfortably over the front of the vehicle seat – while the child is still sitting all the way back?
3. Does the shoulder belt cross the child's shoulder between their neck and arm?
4. Is the lap part of the belt as low as possible, touching the child's thighs and not the stomach?
5. Can the child stay seated like this for the whole trip?

If the answer to any of these questions was "no," then the child still needs to use a booster seat in this vehicle. If the child is using the lap/shoulder belt, check seat belt fit periodically and make sure the seat belt buckle is latched.

DEP DEALER ePROCESS

A child's squirming or slouching can move the belt out of position. If the shoulder belt contacts the face or neck, move the child closer to the center of the vehicle, or use a booster seat to position the seat belt on the child correctly.

WARNING!

Never allow a child to put the shoulder belt under an arm or behind their back. In a crash, the shoulder belt will not protect a child properly, which may result in serious injury or death. A child must always wear both the lap and shoulder portions of the seat belt correctly.

Recommendations For Attaching Child Restraints

Restraint Type	Combined Weight of the Child + Child Restraint	Use Any Attachment Method Shown With An "X" Below			
		LATCH – Lower Anchors Only	Seat Belt Only	LATCH – Lower Anchors + Top Tether Anchor	Seat Belt + Top Tether Anchor
Rear-Facing Child Restraint	Up to 65 lbs (29.5 kg)	X	X		
Rear-Facing Child Restraint	More than 65 lbs (29.5 kg)		X		
Forward-Facing Child Restraint	Up to 65 lbs (29.5 kg)			X	X
Forward-Facing Child Restraint	More than 65 lbs (29.5 kg)				X

DEP DEALER ePROCESS

Lower Anchors And Tethers For CHildren (LATCH) Restraint System

LATCH Label

Your vehicle is equipped with the child restraint anchorage system called LATCH, which stands for Lower Anchors and Tethers for CHildren. The LATCH system has three vehicle anchor points for installing LATCH-equipped child seats. There are two lower anchorages located at the back of the seat cushion where it meets the seatback and one top tether anchorage located behind the seating position. These anchorages are used to install LATCH-equipped child seats without using the vehicle's seat belts. Some seating positions may have a top tether anchorage but no lower anchorages. In these seating positions, the seat belt must be used with the top tether anchorage to install the child restraint. Please see the following table for more information.

LATCH Positions For Installing Child Restraints In This Vehicle

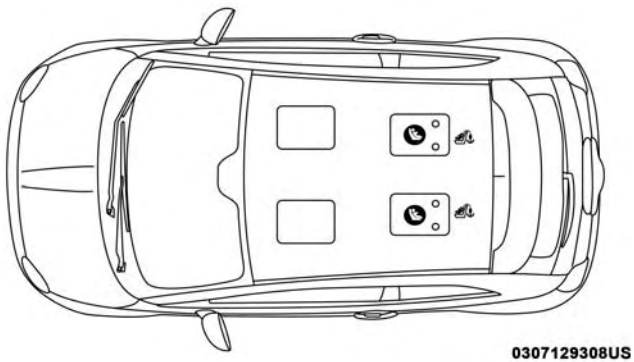

LATCH Positions

Lower Anchorage Symbol (2 Anchorages Per Seating Position)
Top Tether Anchorage Symbol

DEP
DEALER ePROCESS

Frequently Asked Questions About Installing Child Restraints With LATCH		
What is the weight limit (child's weight + weight of the child restraint) for using the LATCH anchorage system to attach the child restraint?	65 lbs (29.5 kg)	Use the LATCH anchorage system until the combined weight of the child and the child restraint is 65 lbs (29.5 kg). Use the seat belt and tether anchor instead of the LATCH anchorage system once the combined weight is more than 65 lbs (29.5 kg).
Can the LATCH anchorages and the seat belt be used together to attach a rear-facing or forward-facing child restraint?	No	Do not use the seat belt when you use the LATCH anchorage system to attach a rear-facing or forward-facing child restraint. Booster seats may be attached to the LATCH anchorages if allowed by the booster seat manufacturer. See your booster seat owner's manual for more information.
Can two child restraints be attached using a common lower LATCH anchorage?	No	Never "share" a LATCH anchorage with two or more child restraints. If the center position does not have dedicated LATCH lower anchorages, use the seat belt to install a child seat in the center position next to a child seat using the LATCH anchorages in an outboard position.

DEP
DEALER ePROCESS

Frequently Asked Questions About Installing Child Restraints With LATCH		
Can the rear-facing child restraint touch the back of the front passenger seat?	Yes	The child seat may touch the back of the front passenger seat if the child restraint manufacturer also allows contact. See your child restraint owner's manual for more information.
Can the head restraints be removed?	Yes	Head restraints are removable in all seating positions.

Locating The LATCH Anchorages

The lower anchorages are round bars that are found at the rear of the seat cushion where it meets the seatback, below the anchorage symbols on the seatback. They are just visible when you lean into the rear seat to install the child restraint. You will easily feel them if you run your finger along the gap between the seatback and seat cushion.

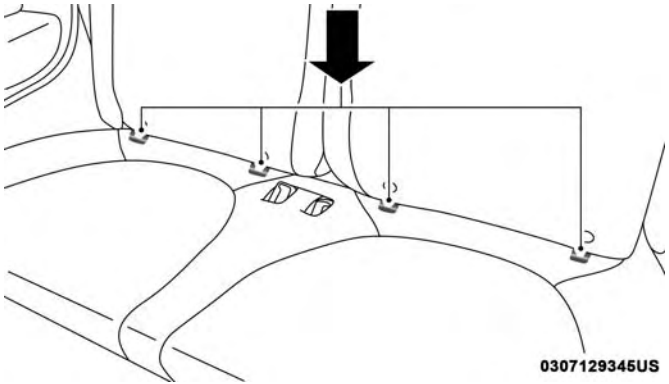

LATCH Lower Anchorages

DEP DEALER ePROCESS

Locating The Upper Tether Anchorages

There are tether strap anchorages behind each rear seating position located on the back of the seat.

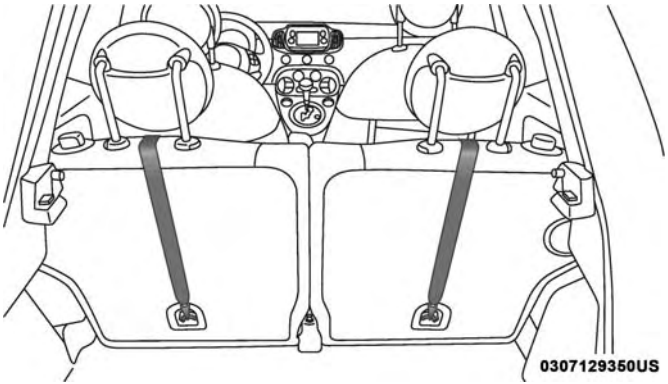

Rear Seat Tether Strap Mounting

LATCH-compatible child restraint systems will be equipped with a rigid bar or a flexible strap on each side. Each will have a hook or connector to attach to the lower anchorage and a way to tighten the connection to the anchorage. Forward-facing child restraints and some rear-facing child restraints will also be equipped with a tether strap. The tether strap will have a hook at the end to attach to the top tether anchorage and a way to tighten the strap after it is attached to the anchorage.

Center Seat LATCH

WARNING!
This vehicle does not have a center seating position. Do not use the center lower LATCH anchorages to install a child seat in the center of the back seat.

Always follow the directions of the child restraint manufacturer when installing your child restraint. Not all child restraint systems will be installed as described here.

To Install A LATCH-Compatible Child Restraint

If the selected seating position has a Switchable Automatic Locking Retractor (ALR) seat belt, stow the seat belt, following the instructions below. See the section “Installing Child Restraints Using the Vehicle Seat Belt” to check what type of seat belt each seating position has.

DEP DEALER ePROCESS

1. Loosen the adjusters on the lower straps and on the tether strap of the child seat so that you can more easily attach the hooks or connectors to the vehicle anchorages.
2. Place the child seat between the lower anchorages for that seating position. For some second row seats, you may need to recline the seat and / or raise the head restraint to get a better fit. If the rear seat can be moved forward and rearward in the vehicle, you may wish to move it to its rear-most position to make room for the child seat. You may also move the front seat forward to allow more room for the child seat.
3. Attach the lower hooks or connectors of the child restraint to the lower anchorages in the selected seating position.
4. If the child restraint has a tether strap, connect it to the top tether anchorage. See the section "Installing Child Restraints Using the Top Tether Anchorage" for directions to attach a tether anchor.
5. Tighten all of the straps as you push the child restraint rearward and downward into the seat. Remove slack in the straps according to the child restraint manufacturer's instructions.
6. Test that the child restraint is installed tightly by pulling back and forth on the child seat at the belt path. It should not move more than 1 inch (25.4 mm) in any direction.

How To Stow An Unused Switchable-ALR (ALR) Seat Belt:

When using the LATCH attaching system to install a child restraint, stow all ALR seat belts that are not being used by other occupants or being used to secure child restraints. An unused belt could injure a child if they play with it and accidentally lock the seat belt retractor. Before installing a child restraint using the LATCH system, buckle the seat belt behind the child restraint and out of the child's reach. If the buckled seat belt interferes with the child restraint installation, instead of buckling it behind the child restraint, route the seat belt through the child restraint belt path and then buckle it. Do not lock the seat belt. Remind all children in the vehicle that the seat belts are not toys and that they should not play with them.

DEP DEALER ePROCESS

WARNING!

- **Improper installation of a child restraint to the LATCH anchorages can lead to failure of the restraint. The child could be badly injured or killed. Follow the child restraint manufacturer's directions exactly when installing an infant or child restraint.**
- **Child restraint anchorages are designed to withstand only those loads imposed by correctly-fitted child restraints. Under no circumstances are they to be used for adult seat belts, harnesses, or for attaching other items or equipment to the vehicle.**

Installing Child Restraints Using The Vehicle Seat Belt

Child restraint systems are designed to be secured in vehicle seats by lap belts or the lap belt portion of a lap/shoulder belt.

WARNING!

- **Improper installation or failure to properly secure a child restraint can lead to failure of the restraint. The child could be badly injured or killed.**
- **Follow the child restraint manufacturer's directions exactly when installing an infant or child restraint.**

The seat belts in the passenger seating positions are equipped with a Switchable Automatic Locking Retractor (ALR) that is designed to keep the lap portion of the seat belt tight around the child restraint so that it is not necessary to use a locking clip. The ALR retractor can be "switched" into a locked mode by pulling all of the webbing out of the retractor and then letting the webbing retract back into the retractor. If it is locked, the ALR will make a clicking noise while the webbing is pulled back into the retractor.

DEP DEALER ePROCESS

Refer to the "Automatic Locking Mode" description in "Switchable Automatic Locking Retractors (ALR)" under "Occupant Restraint Systems" for additional information on ALR.

Please see the table below and the following sections for more information.

Lap/Shoulder Belt Systems For Installing Child Restraints In This Vehicle

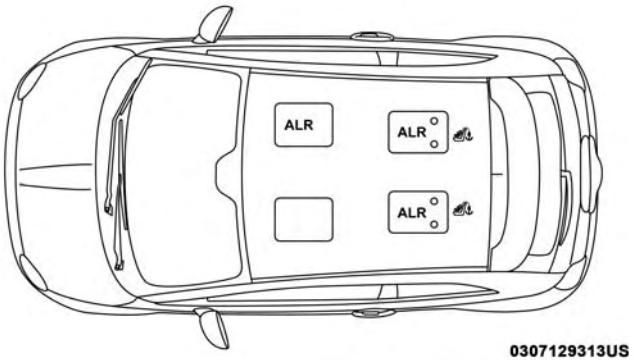

Automatic Locking Retractor (ALR) Locations

ALR = Switchable Automatic Locking Retractor
Top Tether Anchorage Symbol

DEP DEALER ePROCESS

Frequently Asked Questions About Installing Child Restraints With Seat Belts		
What is the weight limit (child's weight + weight of the child restraint) for using the Tether Anchor with the seat belt to attach a forward facing child restraint?	Weight limit of the Child Restraint	Always use the tether anchor when using the seat belt to install a forward facing child restraint, up to the recommended weight limit of the child restraint.
Can the rear-facing child restraint touch the back of the front passenger seat?	Yes	Contact between the front passenger seat and the child restraint is allowed, if the child restraint manufacturer also allows contact.
Can the rear head restraints be removed?	Yes	Head restraints are removable in all seating positions if they interfere with the installation of the child restraint. Refer to "Head Restraints" in "Getting To Know Your Vehicle" for further information.
Can the buckle stalk be twisted to tighten the seat belt against the belt path of the child restraint?	No	Do not twist the buckle stalk in a seating position with an ALR retractor.

DEP DEALER ePROCESS

Installing A Child Restraint With A Switchable Automatic Locking Retractor (ALR):

Child restraint systems are designed to be secured in vehicle seats by lap belts or the lap belt portion of a lap/shoulder belt.

WARNING!

- **Improper installation or failure to properly secure a child restraint can lead to failure of the restraint. The child could be badly injured or killed.**
- **Follow the child restraint manufacturer's directions exactly when installing an infant or child restraint.**

1. Place the child seat in the center of the seating position. For some second row seats, you may need to recline the seat and/or raise the head restraint to get a better fit. If the rear seat can be moved forward and rearward in the vehicle, you may wish to move it to its rear-most position to make room for the child seat. You may also move the front seat forward to allow more room for the child seat.
2. Pull enough of the seat belt webbing from the retractor to pass it through the belt path of the child restraint. Do not twist the belt webbing in the belt path.
3. Slide the latch plate into the buckle until you hear a "click."
4. Pull on the webbing to make the lap portion tight against the child seat.
5. To lock the seat belt, pull down on the shoulder part of the belt until you have pulled all the seat belt webbing out of the retractor. Then, allow the webbing to retract back into the retractor. As the webbing retracts, you will hear a clicking sound. This means the seat belt is now in the Automatic Locking mode.
6. Try to pull the webbing out of the retractor. If it is locked, you should not be able to pull out any webbing. If the retractor is not locked, repeat step 5.
7. Finally, pull up on any excess webbing to tighten the lap portion around the child restraint while you push the child restraint rearward and downward into the vehicle seat.

DEP DEALER ePROCESS

8. If the child restraint has a top tether strap and the seating position has a top tether anchorage, connect the tether strap to the anchorage and tighten the tether strap. See the section "Installing Child Restraints Using the Top Tether Anchorage" for directions to attach a tether anchor.

9. Test that the child restraint is installed tightly by pulling back and forth on the child seat at the belt path. It should not move more than 1 inch (25.4 mm) in any direction.

Any seat belt system will loosen with time, so check the belt occasionally, and pull it tight if necessary.

Installing Child Restraints Using The Top Tether Anchorage

WARNING!

Do not attach a tether strap for a rear-facing car seat to any location in front of the car seat, including the seat frame or a tether anchorage. Only attach the tether strap of a rear-facing car seat to the tether anchorage

(Continued)

WARNING! *(Continued)*

that is approved for that seating position, located behind the top of the vehicle seat. See the section "Lower Anchors and Tethers for CHildren (LATCH) Restraint System" for the location of approved tether anchorages in your vehicle.

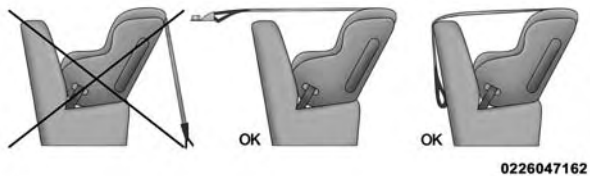

1. Look behind the seating position where you plan to install the child restraint to find the tether anchorage. You may need to move the seat forward to provide better access to the tether anchorage. If there is no top tether anchorage for that seating position, move the child restraint to another position in the vehicle if one is available.

DEP
DEALER ePROCESS

2. Route the tether strap to provide the most direct path for the strap between the anchor and the child seat. If your vehicle is equipped with adjustable rear head restraints, raise the head restraint, and where possible, route the tether strap under the head restraint and between the two posts. If not possible, lower the head restraint and pass the tether strap around the outboard side of the head restraint.
3. Attach the tether strap hook of the child restraint to the top tether anchorage as shown in the diagram.

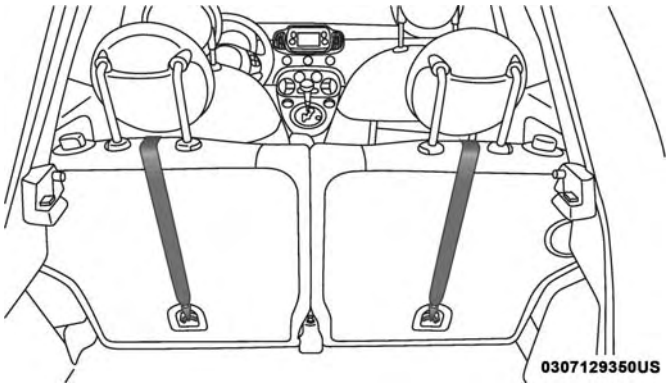

Rear Seat Tether Strap Mounting

4. Remove slack in the tether strap according to the child restraint manufacturer's instructions.

WARNING!

- **An incorrectly anchored tether strap could lead to increased head motion and possible injury to the child. Use only the anchorage position directly behind the child seat to secure a child restraint top tether strap.**
- **If your vehicle is equipped with a split rear seat, make sure the tether strap does not slip into the opening between the seatbacks as you remove slack in the strap.**

Transporting Pets

Air Bags deploying in the front seat could harm your pet. An unrestrained pet will be thrown about and possibly injured, or injure a passenger during panic braking or in a collision.

Pets should be restrained in the rear seat (if equipped) in pet harnesses or pet carriers that are secured by seat belts.

DEP DEALER ePROCESS

SAFETY TIPS

Transporting Passengers

NEVER TRANSPORT PASSENGERS IN THE CARGO AREA.

WARNING!

- **Do not leave children or animals inside parked vehicles in hot weather. Interior heat build-up may cause serious injury or death.**
- **It is extremely dangerous to ride in a cargo area, inside or outside of a vehicle. In a collision, people riding in these areas are more likely to be seriously injured or killed.**
- **Do not allow people to ride in any area of your vehicle that is not equipped with seats and seat belts.**
- **Be sure everyone in your vehicle is in a seat and using a seat belt properly.**

Exhaust Gas

WARNING!

Exhaust gases can injure or kill. They contain carbon monoxide (CO), which is colorless and odorless. Breathing it can make you unconscious and can eventually poison you. To avoid breathing (CO), follow these safety tips:

- **Do not run the engine in a closed garage or in confined areas any longer than needed to move your vehicle in or out of the area.**
- **If you are required to drive with the trunk/liftgate/rear doors open, make sure that all windows are closed and the climate control BLOWER switch is set at high speed. DO NOT use the recirculation mode.**
- **If it is necessary to sit in a parked vehicle with the engine running, adjust your heating or cooling controls to force outside air into the vehicle. Set the blower at high speed.**

The best protection against carbon monoxide entry into the vehicle body is a properly maintained engine exhaust system.

DEP DEALER ePROCESS

Whenever a change is noticed in the sound of the exhaust system, when exhaust fumes can be detected inside the vehicle, or when the underside or rear of the vehicle is damaged, have a competent mechanic inspect the complete exhaust system and adjacent body areas for broken, damaged, deteriorated, or mispositioned parts. Open seams or loose connections could permit exhaust fumes to seep into the passenger compartment. In addition, inspect the exhaust system each time the vehicle is raised for lubrication or oil change. Replace as required.

Safety Checks You Should Make Inside The Vehicle

Seat Belts

Inspect the seat belt system periodically, checking for cuts, frays, and loose parts. Damaged parts must be replaced immediately. Do not disassemble or modify the system.

Front seat belt assemblies must be replaced after a collision. Rear seat belt assemblies must be replaced after a collision if they have been damaged (i.e., bent retractor, torn webbing, etc.). If there is any question regarding seat belt or retractor condition, replace the seat belt.

Air Bag Warning Light

The Air Bag warning light will turn on for four to eight seconds as a bulb check when the ignition switch is first turned to ON/RUN. If the light is either not on during starting, stays on, or turns on while driving, have the system inspected at an authorized dealer as soon as possible. After the bulb check, this light will illuminate with a single chime when a fault with the Air Bag System has been detected. It will stay on until the fault is removed. If the light comes on intermittently or remains on while driving, have an authorized dealer service the vehicle immediately.

Refer to “Occupant Restraint Systems” in “Safety” for further information.

Defroster

Check operation by selecting the defrost mode and place the blower control on high speed. You should be able to feel the air directed against the windshield. See an authorized dealer for service if your defroster is inoperable.

DEP DEALER ePROCESS

Floor Mat Safety Information

Always use floor mats designed to fit your vehicle. Only use a floor mat that does not interfere with the operation of the accelerator, brake or clutch pedals. Only use a floor mat that is securely attached using the floor mat fasteners so it cannot slip out of position and interfere with the accelerator, brake or clutch pedals or impair safe operation of your vehicle in other ways.

WARNING!

An improperly attached, damaged, folded, or stacked floor mat, or damaged floor mat fasteners may cause your floor mat to interfere with the accelerator, brake, or clutch pedals and cause a loss of vehicle control. To prevent SERIOUS INJURY or DEATH:

- **ALWAYS securely attach your floor mat using the floor mat fasteners. DO NOT install your floor mat upside down or turn your floor mat over. Lightly pull to confirm mat is secured using the floor mat fasteners on a regular basis.**

(Continued)

WARNING! ***(Continued)***

- **ALWAYS REMOVE THE EXISTING FLOOR MAT FROM THE VEHICLE before installing any other floor mat. NEVER install or stack an additional floor mat on top of an existing floor mat.**
- **ONLY install floor mats designed to fit your vehicle. NEVER install a floor mat that cannot be properly attached and secured to your vehicle. If a floor mat needs to be replaced, only use a FCA approved floor mat for the specific make, model, and year of your vehicle.**
- **ONLY use the driver's side floor mat on the driver's side floor area. To check for interference, with the vehicle properly parked with the engine off, fully depress the accelerator, the brake, and the clutch pedal (if present) to check for interference. If your floor mat interferes with the operation of any pedal, or is not secure to the floor, remove the floor mat from the vehicle and place the floor mat in your trunk.**
- **ONLY use the passenger's side floor mat on the passenger's side floor area.**

(Continued)

DEP DEALER ePROCESS

WARNING! *(Continued)*

- **ALWAYS make sure objects cannot fall or slide into the driver's side floor area when the vehicle is moving. Objects can become trapped under accelerator, brake, or clutch pedals and could cause a loss of vehicle control.**
- **NEVER place any objects under the floor mat (e.g., towels, keys, etc.). These objects could change the position of the floor mat and may cause interference with the accelerator, brake, or clutch pedals.**
- **If the vehicle carpet has been removed and re-installed, always properly attach carpet to the floor and check the floor mat fasteners are secure to the vehicle carpet. Fully depress each pedal to check for interference with the accelerator, brake, or clutch pedals then re-install the floor mats.**
- **It is recommended to only use mild soap and water to clean your floor mats. After cleaning, always check your floor mat has been properly installed and is secured to your vehicle using the floor mat fasteners by lightly pulling mat.**

Periodic Safety Checks You Should Make Outside The Vehicle

Tires

Examine tires for excessive tread wear and uneven wear patterns. Check for stones, nails, glass, or other objects lodged in the tread or sidewall. Inspect the tread for cuts and cracks. Inspect sidewalls for cuts, cracks, and bulges. Check the wheel nuts for tightness. Check the tires (including spare) for proper cold inflation pressure.

Lights

Have someone observe the operation of brake lights and exterior lights while you work the controls. Check turn signal and high beam indicator lights on the instrument panel.

Door Latches

Check for proper closing, latching, and locking.

Fluid Leaks

Check area under the vehicle after overnight parking for fuel, coolant, oil, or other fluid leaks. Also, if gasoline fumes are detected or if fuel, or brake fluid leaks are suspected. The cause should be located and corrected immediately.

DEP DEALER ePROCESS

DEP
DEALER ePROCESS

STARTING AND OPERATING

CONTENTS

■ STARTING PROCEDURES 161
- □ Manual Transmission — If Equipped 161
- □ Automatic Transmission 161
- □ Normal Starting 161
- □ Cold Weather Operation 161
- □ Extended Park Starting 162
- □ If Engine Fails To Start 162
- □ After Starting 163

■ ENGINE BREAK-IN RECOMMENDATIONS 163

■ PARKING BRAKE 164

■ MANUAL TRANSMISSION — IF EQUIPPED . . .165
- □ Five-Speed Manual Transmission 165
- □ Recommended Shift Speeds 167
- □ Downshifting 167

■ AUTOMATIC TRANSMISSION — IF EQUIPPED . .168
- □ Key Ignition Park Interlock 169
- □ Brake/Transmission Shift Interlock System 169
- □ Six-Speed Automatic Transmission 169
- □ Gear Ranges 170

■ AUTOSTICK 174
- □ Operation 174

■ SPORT MODE 176

■ POWER STEERING 177

■ SPEED CONTROL 178
- □ To Activate 178
- □ To Set A Desired Speed 179
- □ To Vary The Speed Setting 179
- □ To Accelerate For Passing 180

DEP DEALER ePROCESS

- To Resume Speed 180
- To Deactivate 180

■ REAR PARK ASSIST 181

- Rear Park Assist Sensors 181
- Rear Park Assist Warning Display 181
- Rear Park Assist Display 181
- Rear Park Assist Audible Alerts 182
- Failure Indications 183
- Cleaning The Rear Park Assist System 183
- Park Assist System Usage Precautions 183

■ PARKVIEW REAR BACK UP CAMERA 185

■ ADDING FUEL 186

- Fuel Filler Cap (Gas Cap) 186
- Loose Fuel Filler Cap Message 187

■ VEHICLE LOADING 188

- Certification Label 188

■ TRAILER TOWING 189

■ RECREATIONAL TOWING (BEHIND MOTORHOME, ETC.) 190

- Towing This Vehicle Behind Another Vehicle . . .190

■ DRIVING TIPS 191

- Driving On Slippery Surfaces 191
- Driving Through Water 191

DEP
DEALER ePROCESS

STARTING PROCEDURES

Before starting your vehicle, adjust your seat, adjust both inside and outside mirrors, and fasten your seat belts.

WARNING!

- **Never leave children alone in a vehicle, or with access to an unlocked vehicle.**
- **Allowing children to be in a vehicle unattended is dangerous for a number of reasons. A child or others could be seriously or fatally injured. Children should be warned not to touch the parking brake, brake pedal or the transmission gear selector.**
- **Do not leave the key fob in or near the vehicle (or in a location accessible to children). A child could operate power windows, other controls, or move the vehicle.**

Manual Transmission — If Equipped

Apply the parking brake, place the gear selector in NEUTRAL, and press the clutch pedal before starting the vehicle. This vehicle is equipped with a clutch interlocking ignition system. It will not start unless the clutch pedal is pressed to the floor.

Automatic Transmission

The gear selector must be in the PARK or NEUTRAL position before you can start the engine. Depress the brake pedal before shifting to any driving gear.

NOTE: You must press the brake pedal before shifting out of PARK.

Normal Starting

NOTE: Normal starting of either a cold or a warm engine is obtained without pumping or pressing the accelerator pedal.

Turn the ignition switch to the AVV (START) position and release it when the engine starts. If the engine fails to start within 10 seconds, turn the ignition switch to the STOP (OFF/LOCK) position, wait 10 to 15 seconds, then repeat the “Normal Starting” procedure.

Cold Weather Operation

To prevent possible engine damage while starting at low temperatures, this vehicle will inhibit engine cranking when the ambient temperature is less than –22° F (–30° C) and the oil temperature sensor reading indicates an engine block heater has not been used. An externally-powered

DEP DEALER ePROCESS

electric engine block heater is available as optional equipment from your authorized dealer or may be standard equipment in some markets.

The message “plug in engine heater” will be displayed in the instrument cluster when the ambient temperature is below 5° F (–15° C) at the time the engine is shut off as a reminder to avoid possible crank delays at the next cold start.

CAUTION!

Use of the recommended oil and adhering to the prescribed oil change intervals is important to prevent engine damage and ensure satisfactory starting in cold conditions.

Extended Park Starting

NOTE: Extended Park condition occurs when the vehicle has not been started or driven for at least 30 days.

1. Install a battery charger or jumper cables to the battery to ensure a full battery charge during the crank cycle.
2. Cycle the ignition to the START mode and release it when the engine starts.
3. If the engine fails to start within 10 to 15 seconds, cycle the ignition to the OFF mode, wait five seconds to allow the starter to cool, then repeat the Extended Park Starting procedure.
4. If the engine fails to start after eight attempts, allow the starter to cool for at least 10 minutes, then repeat the procedure.

CAUTION!

To prevent damage to the starter, do not crank continuously for more than 10 seconds at a time. Wait 10 to 15 seconds before trying again.

If Engine Fails To Start

WARNING!

Never pour fuel or other flammable liquids into the throttle body air inlet opening in an attempt to start the vehicle. This could result in a flash fire causing serious personal injury.

DEP DEALER ePROCESS

CAUTION!

- **Do not attempt to push or tow your vehicle to get it started. Vehicles equipped with an automatic transmission cannot be started this way. Unburned fuel could enter the catalytic converter and once the engine has started, ignite and damage the converter and vehicle.**
- **To prevent damage to the starter, do not continuously crank the engine for more than 15 seconds at a time. Wait 10 to 15 seconds before trying again.**

After Starting

The idle speed is controlled automatically, and it will decrease as the engine warms up.

ENGINE BREAK-IN RECOMMENDATIONS

A long break-in period is not required for the engine and drivetrain (transmission and axle) in your vehicle.

Drive moderately during the first 300 miles (500 km). After the initial 60 miles (100 km), speeds up to 50 or 55 mph (80 or 90 km/h) are desirable.

While cruising, brief full-throttle acceleration within the limits of local traffic laws contributes to a good break-in. Wide-open throttle acceleration in low gear can be detrimental and should be avoided.

The engine oil installed in the engine at the factory is a high-quality energy conserving type lubricant. Oil changes should be consistent with anticipated climate conditions under which vehicle operations will occur. For the recommended viscosity and quality grades, refer to “Dealer Service” in “Servicing And Maintenance”.

CAUTION!

Never use Non-Detergent Oil or Straight Mineral Oil in the engine or damage may result.

NOTE: A new engine may consume some oil during its first few thousand miles (kilometers) of operation. This should be considered a normal part of the break-in and not interpreted as a problem.

DEP DEALER ePROCESS

PARKING BRAKE

Before leaving the vehicle, make sure that the parking brake is fully applied. Also, be certain to leave the manual transmission in REVERSE or first gear.

The parking brake lever is located in the center console. To apply the parking brake, pull the lever up as firmly as possible. To release the parking brake, pull the lever up slightly, press the center button, then lower the lever completely.

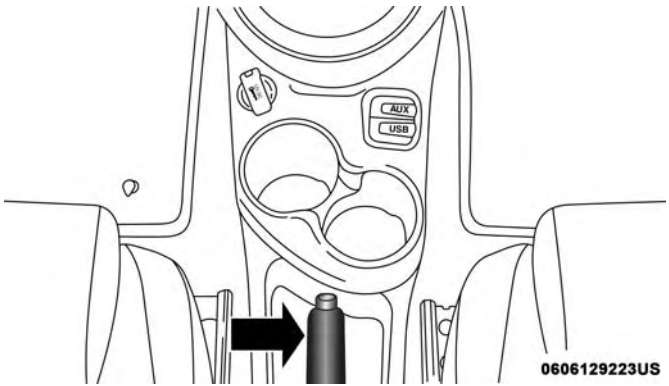

Parking Brake

When the parking brake is applied with the ignition switch in the MAR (ACC/ON/RUN) position, the Brake Warning Light in the instrument cluster will illuminate.

When parking on a hill, it is important to turn the front wheels toward the curb on a downhill grade and away from the curb on an uphill grade. The parking brake should always be applied whenever the driver is not in the vehicle.

WARNING!

- **Never leave children alone in a vehicle, or with access to an unlocked vehicle.**
- **Allowing children to be in a vehicle unattended is dangerous for a number of reasons. A child or others could be seriously or fatally injured. Children should be warned not to touch the parking brake, brake pedal or the gear selector.**
- **Do not leave the key fob in or near the vehicle or in a location accessible to children. A child could operate power windows, other controls, or move the vehicle.**

(Continued)

DEP
DEALER ePROCESS

WARNING! *(Continued)*

- Be sure the parking brake is fully disengaged before driving; failure to do so can lead to brake failure and a collision.
- Always fully apply the parking brake when leaving your vehicle, or it may roll and cause damage or injury. Also be certain to leave a manual transmission in FIRST gear or REVERSE gear. Failure to do so may allow the vehicle to roll and cause damage or injury.

CAUTION!

If the Brake Warning Light remains on with the parking brake released, a brake system malfunction is indicated. Have the brake system serviced by an authorized dealer immediately.

MANUAL TRANSMISSION — IF EQUIPPED

Five-Speed Manual Transmission

WARNING!

You or others could be injured if you leave the vehicle unattended without having the parking brake fully applied. The parking brake should always be applied when the driver is not in the vehicle, especially on an incline.

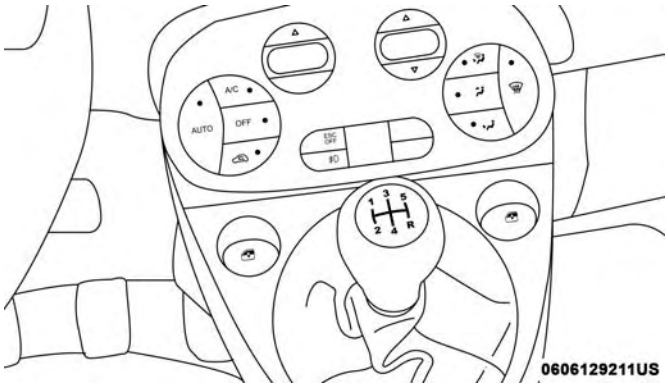

Gear Selector

DEP
DEALER ePROCESS

Fully press the clutch pedal before you shift gears. As you release the clutch pedal, lightly press the accelerator pedal.

NOTE: To shift into REVERSE from NEUTRAL, lift the ring under the knob and, at the same time move the gear selector to the right and then backward.

Use each gear in numerical order; do not skip a gear. Be sure the transmission is in first gear, not third, when starting from a standing position. Damage to the clutch can result from starting in third gear.

For most city driving, you will find it easier to use only the lower gears. For steady highway driving with light accelerations, fifth gear is recommended.

Never drive with your foot resting on the clutch pedal, and never try to hold the vehicle on a hill with the clutch pedal partially engaged. This will cause abnormal wear on the clutch.

REVERSE gear is not synchronized and the vehicle must be at a complete stop to shift into REVERSE gear. When selecting REVERSE gear, the driver should pause (approximately 2 seconds) after pushing in the clutch pedal and prior to shifting into REVERSE which allows gears to stop spinning. Should an unwanted clash noise be produced, the pause length should be increased.

NOTE:

- Clashing REVERSE gear, especially if vehicle is moving, can result in transmission damage.
- During cold weather, until the transmission lubricant is warm, you may experience slightly higher shift efforts. This is normal and not harmful to the transmission.

DEP
DEALER ePROCESS

Recommended Shift Speeds

To use your manual transmission for optimal fuel economy, it should be upshifted as listed in the following table.

Manual Transmission Recommended Shift Speeds Units In mph (km/h)					
Engine Size	**Acceleration Rate**	1 to 2	2 to 3	3 to 4	4 to 5
1.4L LA Engine	Accel	14 (23)	23 (37)	29 (47)	38 (61)
	Cruise	12 (19)	18 (29)	25 (40)	32 (52)

NOTE: A certain amount of noise from the transmission is normal. This noise can be most noticeable when the vehicle is idling in NEUTRAL with the clutch engaged (clutch pedal released), but it may also be heard when driving. The noise may also be more noticeable when the transmission is warm. This noise is normal and is not an indication of a problem with your clutch or transmission.

Downshifting

Proper downshifting will improve fuel economy and prolong engine life.

CAUTION!

If you skip a gear while downshifting or downshift at too high of a vehicle speed, these conditions may cause the engine to over speed if too low of a gear is selected and the clutch pedal is released. Damage to the clutch

(Continued)

DEP DEALER ePROCESS

CAUTION! *(Continued)*

and the transmission can result from skipping a gear while downshifting or down shifting at too high of a vehicle speed even if the clutch pedal is held pressed (i.e., not released).

To maintain a safe speed and prolong brake life, shift down to second or first when descending a steep grade.

When turning a corner, or driving up a steep grade, downshift early so that the engine will not be overburdened.

AUTOMATIC TRANSMISSION — IF EQUIPPED

WARNING!

- **It is dangerous to shift out of PARK or NEUTRAL if the engine speed is higher than idle speed. If your foot is not firmly pressing the brake pedal, the vehicle could accelerate quickly forward or in reverse. You could lose control of the vehicle and hit someone or something. Only shift into gear when the engine is idling normally and your foot is firmly pressing the brake pedal.**

(Continued)

WARNING! *(Continued)*

- **Unintended movement of a vehicle could injure those in or near the vehicle. As with all vehicles, you should never exit a vehicle while the engine is running. Before exiting a vehicle always come to a complete stop, then apply the parking brake, shift the transmission into PARK, turn the engine OFF, and remove the ignition key. Once the key is removed, the transmission is locked in PARK, securing the vehicle against unwanted movement.**
- **When leaving the vehicle, always remove the ignition key from the vehicle and lock the vehicle.**
- **Never leave children alone in a vehicle, or with access to an unlocked vehicle. Allowing children to be in a vehicle unattended is dangerous for a number of reasons. A child or others could be seriously or fatally injured. Children should be warned not to touch the parking brake, brake pedal or the transmission gear selector.**
- **Do not leave the ignition key in or near the vehicle (or in a location accessible to children). A child could operate power windows, other controls, or move the vehicle.**

DEP DEALER ePROCESS

CAUTION!

Damage to the transmission may occur if the following precautions are not observed:

- **Shift into or out of PARK or REVERSE only after the vehicle has come to a complete stop.**
- **Do not shift between PARK, REVERSE, NEUTRAL, or DRIVE when the engine is above idle speed.**
- **Before shifting into any gear, make sure your foot is firmly pressing the brake pedal.**

NOTE: You must press and hold the brake pedal while shifting out of PARK.

Key Ignition Park Interlock

This vehicle is equipped with a Key Ignition Park Interlock which requires the transmission to be in PARK before the ignition can be turned to the LOCK/OFF (key removal) position. The key can only be removed from the ignition when the ignition is in the LOCK/OFF position, and once removed, the transmission is locked in PARK.

Brake/Transmission Shift Interlock System

This vehicle is equipped with a Brake Transmission Shift Interlock System (BTSI) that holds the transmission gear selector in PARK unless the brakes are applied. To shift the transmission out of PARK, the ignition must be in the ON/RUN mode (engine running or not), and the brake pedal must be pressed.

Six-Speed Automatic Transmission

The transmission gear position display (located in the instrument cluster) indicates the transmission gear range. You must press the brake pedal to move the gear selector out of PARK (Refer to “Brake/Transmission Shift Interlock System” in this section). To drive, move the gear selector from PARK or NEUTRAL to the DRIVE position.

The electronically-controlled transmission adapts its shift schedule based on driver inputs, along with environmental and road conditions. The transmission electronics are self-calibrating; therefore, the first few shifts on a new vehicle may be somewhat abrupt. This is a normal condition, and precision shifts will develop within a few hundred miles (kilometers).

DEP DEALER ePROCESS

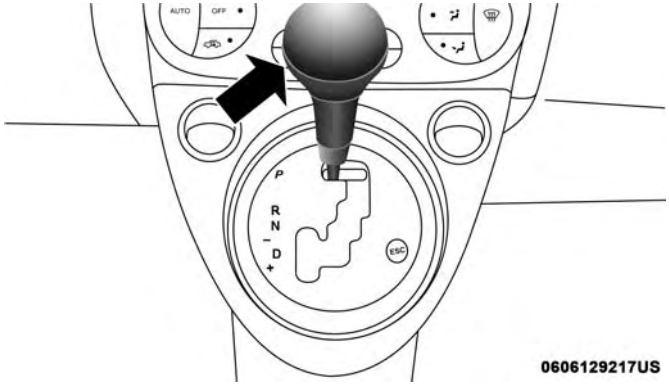

Gear Selector

Only shift from DRIVE to PARK or REVERSE when the accelerator pedal is released and the vehicle is stopped. Be sure to keep your foot on the brake pedal when shifting between these gears.

The transmission gear selector provides PARK, REVERSE, NEUTRAL, DRIVE, and AutoStick (+/–) shift positions. Manual shifts can be made using the AutoStick shift control. Toggling the gear selector forward (-) or rearward (+) while in the AutoStick position (beside the DRIVE position) will manually select the transmission gear, and will display the current gear in the instrument cluster as 1, 2, 3, etc. Refer to "AutoStick" in this section for further information.

NOTE: If the gear selector cannot be moved to the PARK, REVERSE, or NEUTRAL position (when pushed forward) it is probably in the AutoStick (+/-) position (beside the DRIVE position). In AutoStick mode, the transmission gear (1, 2, 3, etc.) is displayed in the instrument cluster. Move the gear selector to the right (into the DRIVE [D] position) for access to PARK, REVERSE, and NEUTRAL.

Gear Ranges

Do not depress the accelerator pedal when shifting from PARK or NEUTRAL into another gear range.

NOTE: After selecting any gear range, wait a moment to allow the selected gear to engage before accelerating. This is especially important when the engine is cold.

PARK (P)

This range supplements the parking brake by locking the transmission. The engine can be started in this range. Never attempt to use PARK while the vehicle is in motion. Apply the parking brake when exiting the vehicle in this range.

DEP
DEALER ePROCESS

When parking on a level surface, you may shift the transmission into PARK first, and then apply the parking brake.

When parking on a hill, apply the parking brake before shifting the transmission to PARK, otherwise the load on the transmission locking mechanism may make it difficult to move the gear selector out of PARK. As an added precaution, turn the front wheels toward the curb on a downhill grade and away from the curb on an uphill grade.

When exiting the vehicle, always:

- Apply the parking brake.
- Shift the transmission into PARK.
- Turn the engine OFF.
- Remove the ignition key.

WARNING!

- **Never use the PARK position as a substitute for the parking brake. Always apply the parking brake fully when exiting the vehicle to guard against vehicle movement and possible injury or damage.**

(Continued)

WARNING! ***(Continued)***

- **Your vehicle could move and injure you and others if it is not in PARK. Check by trying to move the gear selector out of PARK with the brake pedal released. Make sure the transmission is in PARK before exiting the vehicle.**
- **It is dangerous to shift out of PARK or NEUTRAL if the engine speed is higher than idle speed. If your foot is not firmly pressing the brake pedal, the vehicle could accelerate quickly forward or in reverse. You could lose control of the vehicle and hit someone or something. Only shift into gear when the engine is idling normally and your foot is firmly pressing the brake pedal.**
- **Unintended movement of a vehicle could injure those in or near the vehicle. As with all vehicles, you should never exit a vehicle while the engine is running. Before exiting a vehicle always come to a complete stop, then apply the parking brake, shift the transmission into PARK, turn the engine OFF, and remove the ignition key. Once the key is removed, the transmission is locked in PARK, securing the vehicle against unwanted movement.**

(Continued)

DEP DEALER ePROCESS

WARNING! *(Continued)*

- **When exiting the vehicle, always remove the ignition key from the vehicle and lock the vehicle.**
- **Never leave children alone in a vehicle, or with access to an unlocked vehicle. Allowing children to be in a vehicle unattended is dangerous for a number of reasons. A child or others could be seriously or fatally injured. Children should be warned not to touch the parking brake, brake pedal or the transmission gear selector.**
- **Do not leave the ignition key in or near the vehicle (or in a location accessible to children). A child could operate power windows, other controls, or move the vehicle.**

CAUTION!

- **Before moving the transmission gear selector out of PARK, you must turn the ignition to the ON/RUN mode, and also press the brake pedal. Otherwise, damage to the gear selector could result.**
- **DO NOT race the engine when shifting from PARK or NEUTRAL into another gear range, as this can damage the drivetrain.**

The following indicators should be used to ensure that you have properly engaged the transmission into the PARK position:

- When shifting into PARK, firmly move the gear selector all the way forward and to the left until it stops and is fully seated.
- Look at the transmission gear position display and verify that it indicates the PARK position (P).
- With brake pedal released, verify that the gear selector will not move out of PARK.

REVERSE (R)

This range is for moving the vehicle backward. Shift into REVERSE only after the vehicle has come to a complete stop.

NEUTRAL (N)

Use this range when the vehicle is standing for prolonged periods with the engine running. The engine may be started in this range. Apply the parking brake and shift the transmission into PARK if you must exit the vehicle.

DEP DEALER ePROCESS

WARNING!

Do not coast in NEUTRAL and never turn off the ignition to coast down a hill. These are unsafe practices that limit your response to changing traffic or road conditions. You might lose control of the vehicle and have a collision.

CAUTION!

Towing the vehicle, coasting, or driving for any other reason with the transmission in NEUTRAL can cause severe transmission damage. Refer to "Recreational Towing" in "Starting And Operating" and "Towing A Disabled Vehicle" in "In Case Of Emergency" for further information.

DRIVE (D)

This range should be used for most city and highway driving. It provides the smoothest upshifts and downshifts, and the best fuel economy. The transmission automatically upshifts through all forward gears. The DRIVE position provides optimum driving characteristics under all normal operating conditions.

When frequent transmission shifting occurs (such as when operating the vehicle under heavy loading conditions, in hilly terrain, or traveling into strong head winds), use the AutoStick shift control (refer to AutoStick in this section for further information) to select a lower gear. Under these conditions, using a lower gear will improve performance and extend transmission life by reducing excessive shifting and heat buildup.

If the transmission temperature exceeds normal operating limits, the transmission controller will expand the range of torque converter clutch engagement. This is done to prevent transmission damage due to overheating.

During cold temperatures, transmission operation may be modified depending on engine coolant temperature. Normal operation will resume once the engine temperature has risen to a suitable level.

Instrument Cluster Messages

Dedicated messages will be displayed in the instrument cluster to alert the driver when certain unusual conditions occur.

DEP DEALER ePROCESS

Transmission Limp Home Mode

Transmission function is monitored electronically for abnormal conditions. If a condition is detected that could result in transmission damage, Transmission Limp Home Mode is activated. In this mode, the transmission remains in a fixed gear regardless of which forward gear is selected. The Malfunction Indicator Light (MIL) may be illuminated. Limp Home Mode allows the vehicle to be driven to an authorized dealer for service without damaging the transmission.

In the event of a momentary problem, the transmission can be reset to regain all forward gears by performing the following steps:

1. Stop the vehicle.
2. Shift the transmission into PARK.
3. Turn the ignition OFF.
4. Wait approximately 10 seconds.
5. Restart the engine.
6. Shift into the desired gear range. If the problem is no longer detected, the transmission will return to normal operation.

NOTE: Even if the transmission can be reset, we recommend that you visit an authorized dealer at your earliest possible convenience. An authorized dealer has diagnostic equipment to assess the condition of your transmission. If the transmission cannot be reset, authorized dealer service is required.

AUTOSTICK

AutoStick is a driver-interactive transmission feature providing manual shift control, giving you more control of the vehicle. AutoStick allows you to maximize engine braking, eliminate undesirable upshifts and downshifts, and improve overall vehicle performance. This system can also provide you with more control during passing, city driving, cold slippery conditions, mountain driving, and many other situations.

Operation

When the gear selector is in the AutoStick position (beside the Drive position), it can be moved forward and rearward. This allows the driver to manually select the transmission gear being used. Moving the gear selector forward (-) triggers a downshift, and rearward (+) an upshift. The current gear is displayed in the instrument cluster.

DEP DEALER ePROCESS

NOTE: In AutoStick mode, the transmission will only shift up or down when the driver moves the gear selector rearward (+) or forward (-), except as described below.

- The transmission will automatically upshift when necessary to prevent engine over-speed.
- The transmission will automatically downshift as the vehicle slows (to prevent engine lugging) and will display the current gear.
- The transmission will automatically downshift to first gear when coming to a stop. After a stop, the driver should manually upshift (+) the transmission as the vehicle is accelerated.
- You can start out (from a stop) in first, second, or third gear. Starting out in second or third gear can be helpful in snow or icy conditions. To select second or third gear after the vehicle is brought to a stop, tap the gear selector rearward (+) once or twice.
- The system will ignore shift commands that would cause engine lugging or overspeed. An audible beep will sound if an inappropriate gear is requested.
- Avoid using speed control when AutoStick is engaged because the transmission will not shift automatically.
- Transmission shifting will be more noticeable when AutoStick is enabled.
- The system may revert to automatic shift mode if a fault or overheat condition is detected.

To disengage AutoStick mode, return the gear selector to the DRIVE position. You can shift in or out of the AutoStick position at any time without taking your foot off the accelerator pedal.

WARNING!

Do not downshift for additional engine braking on a slippery surface. The drive wheels could lose their grip and the vehicle could skid, causing a collision or personal injury.

DEP DEALER ePROCESS

SPORT MODE

The Sport mode increases steering feedback to the driver with slight increases in effort and throttle pedal-to-engine response. Changes to the transmission shift schedules for more aggressive shifting will occur on automatic transmission versions.

Sport driving mode is useful while driving on winding roads where more steering precision is desired.

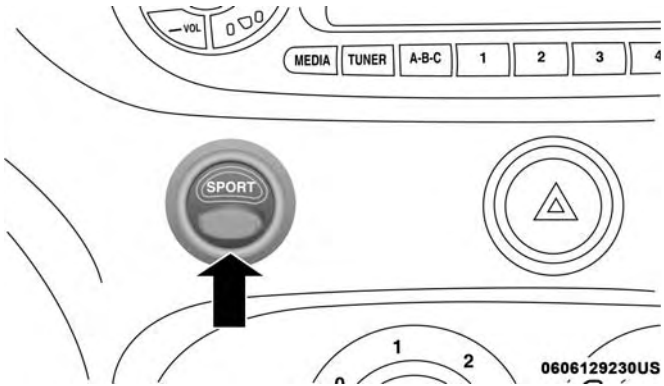

SPORT Button

Manual Transmission — If Equipped

1. Push the SPORT button, located above the climate controls to activate SPORT mode.

NOTE: Once activated, a SPORT message will be displayed in the instrument cluster.

2. Momentarily release the accelerator pedal.
3. Press the accelerator pedal again to activate.
4. Push the SPORT button again to return to the standard driving mode.

Automatic Transmission — If Equipped

1. Push the SPORT button, located above the climate controls to activate SPORT mode.

NOTE: Once SPORT mode is activated, a "SPORT" message will be displayed in the instrument cluster. The "SPORT" message may change to *italic* font and only display for a few seconds on some models.

2. Push the SPORT button again to return to the standard driving mode.

DEP
DEALER ePROCESS

POWER STEERING

The electric power steering system will give you good vehicle response and increased ease of maneuverability in tight spaces. The system will vary its assist to provide light efforts while parking and good feel while driving. If the electric steering system experiences a fault that prevents it from providing assist, you will still have the ability to steer the vehicle manually.

WARNING!

Continued operation with reduced or no power steering assist could pose a safety risk to yourself and others. Service should be obtained as soon as possible.

If the Steering icon is flashing, it indicates that the vehicle needs to be taken to an authorized dealer for service. It is likely the vehicle has lost power steering assistance.

If the Steering icon is displayed and the "SERVICE POWER STEERING" message is displayed on the instrument cluster screen, they indicate that extreme steering maneuvers may have occurred which caused an over temperature condition in the power steering system. Once driving conditions are safe, pull over and let the vehicle idle for a few moments until the icon and message turn off. Refer to "Instrument Cluster Display" in "Getting To Know Your Instrument Panel" for further information.

If the Steering icon, and the "SERVICE POWER STEERING - ASSIST OFF" messages are displayed on the instrument cluster screen, the vehicle needs to be taken to an authorized dealer for service. Refer to "Instrument Cluster Display" in "Getting To Know Your Instrument Panel" for further information.

NOTE:

- Even if the power steering assistance is no longer operational, it is still possible to steer the vehicle. Under these conditions there will be a substantial increase in steering effort, especially at low speeds and during parking maneuvers.
- If the condition persists, see an authorized dealer for service.

DEP DEALER ePROCESS

SPEED CONTROL

When engaged, the Speed Control takes over accelerator operations at speeds greater than 25 mph (40 km/h).

The Speed Control buttons are located on the right side of the steering wheel.

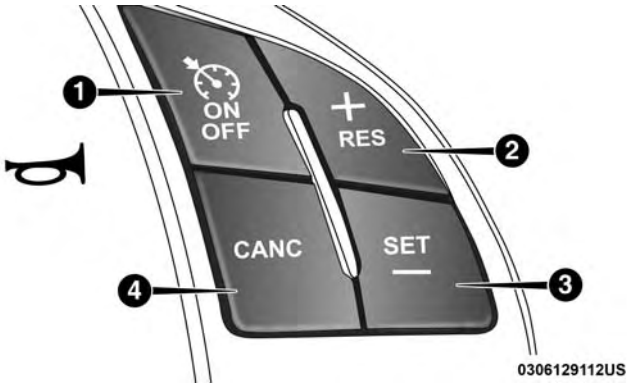

Speed Control Buttons

1 — ON/OFF
2 — RES (+)/Resume/Accel
3 — SET (-)/Decel
4 — CANC/Cancel

NOTE: In order to ensure proper operation, the Speed Control system has been designed to shut down if multiple Speed Control functions are operated at the same time. If this occurs, the Speed Control system can be reactivated by pushing the Speed Control ON/OFF button and resetting the desired vehicle set speed.

To Activate

Push the ON/OFF button. The Cruise Indicator Light in the instrument cluster display will illuminate. To turn the system off, push the ON/OFF button a second time. The Cruise Indicator Light will turn off. The system should be turned off when not in use.

WARNING!

Leaving the Speed Control system on when not in use is dangerous. You could accidentally set the system or cause it to go faster than you want. You could lose control and have an accident. Always leave the system off when you are not using it.

DEP
DEALER ePROCESS

To Set A Desired Speed

Turn the Speed Control on. When the vehicle has reached the desired speed, push the SET (-) button and release. Release the accelerator and the vehicle will operate at the selected speed.

NOTE: The vehicle should be traveling at a steady speed and on level ground before pushing the SET (-) button.

To Vary The Speed Setting

To Increase Speed

When the Speed Control is set, you can increase speed by pushing the RES (+) button.

The driver's preferred units can be selected through the instrument panel settings if equipped. Refer to "Getting To Know Your Instrument Panel" for more information. The speed decrement shown is dependant on the chosen speed unit of U.S. (mph) or Metric (km/h):

U.S. Speed (mph)

- Pushing the RES (+) button once will result in a 1 mph increase in set speed. Each subsequent tap of the button results in an increase of 1 mph.
- If the button is continually pushed, the set speed will continue to increase until the button is released, then the new set speed will be established.

Metric Speed (km/h)

- Pushing the RES (+) button once will result in a 1 km/h increase in set speed. Each subsequent tap of the button results in an increase of 1 km/h.
- If the button is continually pushed, the set speed will continue to increase until the button is released, then the new set speed will be established.

To Decrease Speed

When the Speed Control is set, you can decrease speed by pushing the SET (-) button.

The driver's preferred units can be selected through the instrument panel settings if equipped. Refer to "Getting To Know Your Instrument Panel" for more information. The speed decrement shown is dependant on the chosen speed unit of U.S. (mph) or Metric (km/h):

U.S. Speed (mph)

- Pushing the SET (-) button once will result in a 1 mph decrease in set speed. Each subsequent tap of the button results in a decrease of 1 mph.

DEP DEALER ePROCESS

- If the button is continually pushed, the set speed will continue to decrease until the button is released, then the new set speed will be established.

Metric Speed (km/h)

- Pushing the SET (-) button once will result in a 1 km/h decrease in set speed. Each subsequent tap of the button results in a decrease of 1 km/h.
- If the button is continually pushed, the set speed will continue to decrease until the button is released, then the new set speed will be established.

To Accelerate For Passing

Press the accelerator as you would normally. When the pedal is released, the vehicle will return to the set speed.

Using Speed Control On Hills

The transmission may downshift on hills to maintain the vehicle set speed.

NOTE: The Speed Control system maintains speed up and down hills. A slight speed change on moderate hills is normal.

On steep hills, a greater speed loss or gain may occur so it may be preferable to drive without Speed Control.

WARNING!

Speed Control can be dangerous where the system cannot maintain a constant speed. Your vehicle could go too fast for the conditions, and you could lose control and have an accident. Do not use Speed Control in heavy traffic or on roads that are winding, icy, snow-covered or slippery.

To Resume Speed

To resume a previously set speed, push the RES (+) button and release. Resume can be used at any speed above 25 mph (40 km/h).

To Deactivate

A soft tap on the brake pedal, pushing the CANC button, or normal brake pressure while slowing the vehicle will deactivate the Speed Control without erasing the set speed from memory.

Pushing the ON/OFF button or turning the ignition switch OFF erases the set speed from memory.

DEP DEALER ePROCESS

REAR PARK ASSIST

The Rear Park Assist system provides audible and visual indications of the distance between the rear fascia/bumper and a detected obstacle when backing up, e.g. during a parking maneuver. Refer to the "Park Assist System Usage Precautions" for the limitations of this system and recommendations.

The Rear Park Assist is automatically activated when the transmission is placed into REVERSE.

Rear Park Assist Sensors

The four Rear Park Assist sensors, located in the rear fascia/bumper, monitor the area behind the vehicle that is within the sensors' field of view. The sensors can detect obstacles, in the horizontal direction, from approximately 12 inches (30 cm) up to 55 inches (140 cm) from the center of the rear fascia/bumper and up to 24 inches (60 cm) from the corners of the rear fascia/bumper, depending on the location, type and orientation of the obstacle.

If several obstacles are detected, the Rear Park Assist system indicates the nearest obstacle.

The minimum height of a detectable obstacle corresponds to the maximum height of an obstacle that would clear the underside of the vehicle during the parking maneuver.

Rear Park Assist Warning Display

The Rear Park Assist Warning screen is located within the instrument cluster display. It provides audible and visual warnings to indicate the distance between the rear fascia/bumper and the detected obstacle. The settings can be adjusted through the Uconnect screen. Refer to "Uconnect Settings" in "Multimedia" for further information.

Rear Park Assist Display

When the vehicle is in REVERSE, the warning display will turn ON indicating the system status.

The system will indicate a detected obstacle by showing arcs in one or more regions based on the obstacle's distance and location relative to the vehicle.

If an obstacle is detected in the center rear region, the display will show solid arcs in the center rear region and will produce an audible alert. As the vehicle moves closer to the obstacle, the display will show fewer arcs and the audible alert becomes more frequent.

If an obstacle is detected in the left and/or right rear region, the display will show solid arcs in the left and/or right rear region and will produce an audible alert. As the vehicle moves closer to the obstacle, the display will show fewer arcs and the audible alert becomes more frequent.

DEALER ePROCESS

Rear Park Assist Audible Alerts

If an obstacle is behind the vehicle when the transmission is placed into REVERSE, an audible alert is activated.

The tones emitted by the loudspeaker inform the driver that the vehicle is approaching an obstacle. The pauses between the tones are directly proportional to the distance from the obstacle. Pulses emitted in quick succession indicate the presence of a very close obstacle. A continuous tone indicates that the obstacle is less than 12 inches (30 cm) away.

Audible And Visual Signals Supplied By The Rear Park Assist System

SIGNAL	MEANING	INDICATION
Obstacle Distance	An obstacle is present within the sensors' field of view	**Audible Signal** (dashboard loudspeaker) • Sound pulses emitted at a rate that increases as the distance decreases. • Emits continuous tone at 12 inches (30 cm). • Adjustable volume level. (Refer to "Instrument Cluster Display" in "Getting To Know Your Instrument Panel" for further information.) **Visual Signal** (Instrument Cluster Display) • Arcs are shown based on the obstacle's distance and location relative to the vehicle. (Refer to "Rear Park Assist Display" for further information).
Failure	Sensor or System failures	**Visual Signal** (Instrument Panel) • Icon appears on display. • Message appears on the instrument cluster display (if equipped).

DEP DEALER ePROCESS

While audible signals are emitted, the audio system is not muted.

The audible signal is turned off immediately if the distance increases. The tone cycle remains constant if the distance measured by the inner sensors is constant. If this condition occurs for the external sensors, the signal is turned off after three seconds (stopping warnings during maneuvers parallel to walls).

Failure Indications

A malfunction of the Rear Park Assist sensors or system is indicated, during REVERSE gear engagement, by the instrument panel warning icon and message appearing on the instrument cluster display.

The warning icon is illuminated and a message appears on the instrument cluster display. Refer to "Instrument Cluster Display" in "Getting To Know Your Instrument Panel" for further information.

The sensors and wiring are tested continuously when the ignition is in the ON/RUN position. Failures are indicated immediately if they occur when the system is on.

Even if the system is able to identify that a specific sensor is in failure condition, the instrument cluster display shall indicate that the Rear Park Assist system is unavailable, without reference to the sensor in failure condition. If even a single sensor fails, the entire system must be disabled. The system is turned off automatically.

Cleaning The Rear Park Assist System

Clean the Rear Park Assist sensors with water, car wash soap and a soft cloth. Do not use rough or hard cloths. In washing stations, clean sensors quickly keeping the vapor jet/high pressure washing nozzles at least 4 inches (10 cm) from the sensors. Do not scratch or poke the sensors. Otherwise, you could damage the sensors.

Park Assist System Usage Precautions

NOTE:

- Ensure that the outer surface and the underside of the rear bumper is clean and clear of snow, ice, mud, dirt or other obstruction to keep the Rear Park Assist system operating properly.
- Jackhammers, large trucks, and other vibrations could affect the performance of Rear Park Assist.
- Clean the Rear Park Assist sensors regularly, taking care not to scratch or damage them. The sensors must not be covered with ice, snow, slush, mud, dirt or debris.

DEP DEALER ePROCESS

Failure to do so can result in the system not working properly. The Rear Park Assist system might not detect an obstacle behind the fascia/bumper, or it could provide a false indication that an obstacle is behind the fascia/bumper.

- Objects such as bicycle carriers, etc., must not be placed within 12 inches (30 cm) from the rear fascia/bumper while driving the vehicle. Failure to do so can result in the system misinterpreting a close object as a sensor problem, causing a failure indication to be displayed in the instrument cluster display.

WARNING!

- **Drivers must be careful when backing up even when using ParkSense. Always check carefully behind your vehicle, look behind you, and be sure to check for pedestrians, animals, other vehicles, obstructions, and blind spots before backing up. You are responsible for safety and must continue to pay attention to your surroundings. Failure to do so can result in serious injury or death.**
- **Before using ParkSense, it is strongly recommended that the ball mount and hitch ball assembly is**

(Continued)

WARNING! ***(Continued)***

disconnected from the vehicle when the vehicle is not used for towing. Failure to do so can result in injury or damage to vehicles or obstacles because the hitch ball will be much closer to the obstacle than the rear fascia when the loudspeaker sounds the continuous tone. Also, the sensors could detect the ball mount and hitch ball assembly, depending on its size and shape, giving a false indication that an obstacle is behind the vehicle.

CAUTION!

- **ParkSense is only a parking aid and it is unable to recognize every obstacle, including small obstacles. Parking curbs might be temporarily detected or not detected at all. Obstacles located above or below the sensors will not be detected when they are in close proximity.**
- **The vehicle must be driven slowly when using ParkSense in order to be able to stop in time when an obstacle is detected. It is recommended that the driver looks over his/her shoulder when using ParkSense.**

DEP DEALER ePROCESS

PARKVIEW REAR BACK UP CAMERA

Your vehicle is equipped with the ParkView Rear Back Up Camera that allows you to see an on-screen image of the rear surroundings of your vehicle whenever the gear selector is put into REVERSE. The image will be displayed in the touchscreen display along with a caution note to "check entire surroundings" across the top of the screen. After five seconds, this note will disappear. The ParkView camera is located on the rear of the vehicle above the rear license plate.

When the vehicle is shifted out of REVERSE, the rear camera mode is exited and the last selected touchscreen appears again.

If your vehicle is equipped with the Camera Delay feature and it is turned on, the rear camera image will be displayed for up to ten seconds after the vehicle is shifted out of REVERSE unless one of the following conditions occurs:

- The vehicle speed exceeds 8 mph (13 km/h).
- The gear selector is moved to PARK.
- The soft button "Image defeat [X]" to disable the image is pressed.

When enabled, active guidelines are overlaid on the image to illustrate the width of the vehicle and its projected backup path based on the steering wheel position. A dashed center line overlay indicates the center of the vehicle to assist with parking.

Different colored zones indicate the distance to the rear of the vehicle.

The following table shows the approximate distances for each zone:

Zone	Distance To The Rear Of The Vehicle
Red	0 - 1 ft (0 - 30 cm)
Yellow	1 ft - 3 ft (30 cm - 1 m)
Green	3 ft or greater (1 m or greater)

WARNING!

Drivers must be careful when backing up even when using the ParkView Rear Back Up Camera. Always check carefully behind your vehicle, and be sure to

(Continued)

DEP DEALER ePROCESS

WARNING! *(Continued)*

check for pedestrians, animals, other vehicles, obstructions, or blind spots before backing up. You are responsible for the safety of your surroundings and must continue to pay attention while backing up. Failure to do so can result in serious injury or death.

CAUTION!

- **To avoid vehicle damage, ParkView should only be used as a parking aid. The ParkView camera is unable to view every obstacle or object in your drive path.**
- **To avoid vehicle damage, the vehicle must be driven slowly when using ParkView to be able to stop in time when an obstacle is seen. It is recommended that the driver look frequently over his/her shoulder when using ParkView.**

NOTE: If snow, ice, mud, or any foreign substance builds up on the camera lens, clean the lens, rinse with water, and dry with a soft cloth. Do not cover the lens.

ADDING FUEL

Fuel Filler Cap (Gas Cap)

The gas cap is located on the passenger side of the vehicle. If the gas cap is lost or damaged, be sure the replacement cap is the correct one for this vehicle.

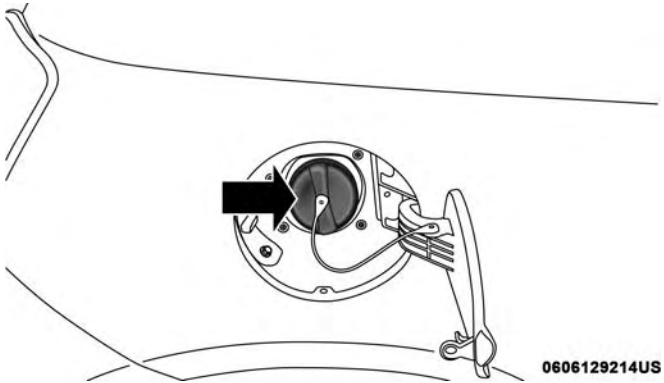

Fuel Filler Cap

DEP
DEALER ePROCESS

WARNING!

- **Never have any smoking materials lit in or near the vehicle when the gas cap is removed or the tank is being filled.**
- **Never add fuel when the engine is running. It may cause the MIL to turn on and could cause a fire.**
- **A fire may result if gasoline is pumped into a portable container that is inside of a vehicle. You could be burned. Always place gas containers on the ground while filling.**

CAUTION!

- **Damage to the fuel system or emission control system could result from using an improper fuel filler cap. A poorly fitting cap could let impurities into the fuel system. Also, a poorly fitting aftermarket cap can cause the "Malfunction Indicator Light (MIL)" to illuminate, due to fuel vapors escaping from the system.**
- **To avoid fuel spillage and overfilling, do not "top off" the fuel tank after filling.**

NOTE:

- When the fuel nozzle "clicks" or shuts off, the fuel tank is full.
- Tighten the gas cap about 1/4 turn until you hear one click. This is an indication that the cap is properly tightened.
- If the gas cap is not tightened properly, the MIL will come on. Be sure the gas cap is tightened every time the vehicle is refueled.

Loose Fuel Filler Cap Message

After fuel has been added, the vehicle diagnostic system can determine if the fuel filler cap is possibly loose, improperly installed, or damaged. If the system detects a malfunction, the "gASCAP" message will display in the odometer display. Tighten the gas cap until a "clicking" sound is heard. This is an indication that the gas cap is properly tightened. Push the odometer reset button to turn the message off. If the problem persists, the message will appear the next time the vehicle is started. This might indicate a damaged cap. If the problem is detected twice in a row, the system will turn on the MIL. Resolving the problem will turn the MIL off.

DEP DEALER ePROCESS

VEHICLE LOADING

Certification Label

As required by National Highway Traffic Safety Administration regulations, your vehicle has a certification label affixed to the driver's side door or pillar.

This label contains the month and year of manufacture, Gross Vehicle Weight Rating (GVWR), Gross Axle Weight Rating (GAWR) front and rear, and Vehicle Identification Number (VIN). A Month-Day-Hour (MDH) number is included on this label and indicates the Month, Day and Hour of manufacture. The bar code that appears on the bottom of the label is your VIN.

Gross Vehicle Weight Rating (GVWR)

The GVWR is the total permissible weight of your vehicle including driver, passengers, vehicle, options and cargo. The label also specifies maximum capacities of front and rear axle systems (GAWR). Total load must be limited so GVWR and front and rear GAWR are not exceeded.

Payload

The payload of a vehicle is defined as the allowable load weight a truck can carry, including the weight of the driver, all passengers, options and cargo.

Gross Axle Weight Rating (GAWR)

The GAWR is the maximum permissible load on the front and rear axles. The load must be distributed in the cargo area so that the GAWR of each axle is not exceeded.

Each axle GAWR is determined by the components in the system with the lowest load carrying capacity (axle, springs, tires or wheels). Heavier axles or suspension components sometimes specified by purchasers for increased durability does not necessarily increase the vehicle's GVWR.

Tire Size

The tire size on the Vehicle Certification Label represents the actual tire size on your vehicle. Replacement tires must be equal to the load capacity of this tire size.

Rim Size

This is the rim size that is appropriate for the tire size listed.

Inflation Pressure

This is the cold tire inflation pressure for your vehicle for all loading conditions up to full GAWR.

DEP
DEALER ePROCESS

Curb Weight

The curb weight of a vehicle is defined as the total weight of the vehicle with all fluids, including vehicle fuel, at full capacity conditions, and with no occupants or cargo loaded into the vehicle. The front and rear curb weight values are determined by weighing your vehicle on a commercial scale before any occupants or cargo are added.

Loading

The actual total weight and the weight of the front and rear of your vehicle at the ground can best be determined by weighing it when it is loaded and ready for operation.

The entire vehicle should first be weighed on a commercial scale to insure that the GVWR has not been exceeded. The weight on the front and rear of the vehicle should then be determined separately to be sure that the load is properly distributed over the front and rear axle. Weighing the vehicle may show that the GAWR of either the front or rear axles has been exceeded but the total load is within the specified GVWR. If so, weight must be shifted from front to rear or rear to front as appropriate until the specified weight limitations are met. Store the heavier items down low and be sure that the weight is distributed equally. Stow all loose items securely before driving.

Improper weight distributions can have an adverse effect on the way your vehicle steers and handles and the way the brakes operate.

CAUTION!

Do not load your vehicle any heavier than the GVWR or the maximum front and rear GAWR. If you do, parts on your vehicle can break, or it can change the way your vehicle handles. This could cause you to lose control. Also overloading can shorten the life of your vehicle.

TRAILER TOWING

Trailer towing with this vehicle is not recommended.

DEP DEALER ePROCESS

RECREATIONAL TOWING (BEHIND MOTORHOME, ETC.)

Towing This Vehicle Behind Another Vehicle

Towing Condition	Wheels OFF the Ground	Manual Transmission	Automatic Transmission
Flat Tow	NONE	Transmission in NEUTRAL 65 mph (105 km/h) max speed	NOT ALLOWED
Dolly Tow	Front	OK	OK
	Rear	NOT ALLOWED	NOT ALLOWED
On Trailer	ALL	OK	OK

NOTE: When towing your vehicle, always follow applicable state and provincial laws. Contact state and provincial Highway Safety offices for additional details.

This vehicle may be towed on a flatbed or vehicle trailer provided all four wheels are OFF the ground.

This vehicle may also be towed using a tow dolly (with the front wheels OFF the ground).

Vehicles equipped with **manual transmissions** may be flat towed (with all four wheels on the ground) speeds up to 65 mph (105 km/h), for any distance, if the manual transmission is in NEUTRAL.

CAUTION!

- **DO NOT flat tow any vehicle equipped with an automatic transmission. Damage to the drivetrain will result. If these vehicles require towing, make sure all drive wheels are OFF the ground.**
- **Towing this vehicle in violation of the above requirements can cause severe transmission damage. Damage from improper towing is not covered under the New Vehicle Limited Warranty.**

DEP DEALER ePROCESS

DRIVING TIPS

Driving On Slippery Surfaces

Information in this section will aid in safe controlled launches in adverse conditions.

Acceleration

Rapid acceleration on snow covered, wet, or other slippery surfaces may cause the driving wheels to pull erratically to the right or left. This phenomenon occurs when there is a difference in the surface traction under the front (driving) wheels.

WARNING!

Rapid acceleration on slippery surfaces is dangerous. Unequal traction can cause sudden pulling of the front wheels. You could lose control of the vehicle and possibly have a collision. Accelerate slowly and carefully whenever there is likely to be poor traction (ice, snow, wet, mud, loose sand, etc.).

Traction

When driving on wet or slushy roads, it is possible for a wedge of water to build up between the tire and road surface. This is hydroplaning and may cause partial or complete loss of vehicle control and stopping ability. To reduce this possibility, the following precautions should be observed:

- Slow down during rainstorms or when the roads are slushy.
- Slow down if the road has standing water or puddles.
- Replace the tires when tread wear indicators first become visible.
- Keep tires properly inflated.
- Maintain sufficient distance between your vehicle and the vehicle in front of you to avoid a collision in a sudden stop.

Driving Through Water

Driving through water more than a few inches/centimeters deep will require extra caution to ensure safety and prevent damage to your vehicle.

DEP DEALER ePROCESS

Flowing/Rising Water

WARNING!

Do not drive on or across a road or path where water is flowing and/or rising (as in storm run-off). Flowing water can wear away the road or path's surface and cause your vehicle to sink into deeper water. Furthermore, flowing and/or rising water can carry your vehicle away swiftly. Failure to follow this warning may result in injuries that are serious or fatal to you, your passengers, and others around you.

Shallow Standing Water

Although your vehicle is capable of driving through shallow standing water, consider the following Cautions and Warnings before doing so.

WARNING!

- **Driving through standing water limits your vehicle's traction capabilities. Do not exceed 5 mph (8 km/h) when driving through standing water.**

(Continued)

WARNING! *(Continued)*

- **Driving through standing water limits your vehicle's braking capabilities, which increases stopping distances. Therefore, after driving through standing water, drive slowly and lightly press on the brake pedal several times to dry the brakes.**
- **Failure to follow these warnings may result in injuries that are serious or fatal to you, your passengers, and others around you.**

CAUTION!

- **Always check the depth of the standing water before driving through it. Never drive through standing water that is deeper than the bottom of the tire rims mounted on the vehicle.**
- **Determine the condition of the road or the path that is under water and if there are any obstacles in the way before driving through the standing water.**
- **Do not exceed 5 mph (8 km/h) when driving through standing water. This will minimize wave effects.**

(Continued)

DEP DEALER ePROCESS

CAUTION! *(Continued)*

- Driving through standing water may cause damage to your vehicle's drivetrain components. Always inspect your vehicle's fluids (i.e., engine oil, transmission, axle, etc.) for signs of contamination (i.e., fluid that is milky or foamy in appearance) after driving through standing water. Do not continue to operate the vehicle if any fluid appears contaminated, as this may result in further damage. Such damage is not covered by the New Vehicle Limited Warranty.
- Getting water inside your vehicle's engine can cause it to lock up and stall out, and cause serious internal damage to the engine. Such damage is not covered by the New Vehicle Limited Warranty.

DEP DEALER ePROCESS

DEP
DEALER ePROCESS

IN CASE OF EMERGENCY

CONTENTS

■ HAZARD WARNING FLASHERS 197

■ BULB REPLACEMENT 197

- Replacement Bulbs 197
- Replacing Exterior Bulbs 198
- Replacing Interior Bulbs 200

■ FUSES 200

- Interior Fuses 200
- Underhood Fuses 202

■ TIRE SERVICE KIT — IF EQUIPPED 204

- Tire Service Kit Storage 204
- Tire Service Kit Components And Operation . . .205
- Tire Service Kit Usage Precautions 206
- Sealing A Tire With Tire Service Kit 208

■ TIRE SERVICE KIT — IF EQUIPPED 212

- Tire Service Kit Storage 212
- Tire Service Kit Components And Operation . . .213
- Tire Service Kit Usage Precautions 214
- Sealing A Tire With Tire Service Kit 216

■ JUMP STARTING PROCEDURE 220

- Preparations For Jump Start 220
- Jump Starting Procedure 221

■ GEAR SELECTOR OVERRIDE 223

■ IF YOUR ENGINE OVERHEATS 224

■ FREEING A STUCK VEHICLE 224

■ TOWING A DISABLED VEHICLE 226

- Automatic Transmission 227
- Manual Transmission 227

DEP DEALER ePROCESS

■ ENHANCED ACCIDENT RESPONSE SYSTEM (EARS) 228

■ EVENT DATA RECORDER (EDR) 228

DEP
DEALER ePROCESS

HAZARD WARNING FLASHERS

The Hazard Warning flasher switch is located on the instrument panel below the radio.

Push the switch to turn on the Hazard Warning flashers. When the switch is activated, all directional turn signals will flash on and off to warn oncoming traffic of an emergency. Push the switch a second time to turn off the Hazard Warning flashers.

Do not use this emergency warning system when the vehicle is in motion. Use it when your vehicle is disabled and it is creating a safety hazard for other motorists.

If it is necessary to leave the vehicle to go for service, the Hazard Warning flashers will continue to operate with the ignition key removed and the vehicle locked.

NOTE: With extended use, the Hazard Warning flashers may wear down your battery.

BULB REPLACEMENT

Replacement Bulbs

Interior Bulbs

	Bulb Number
Overhead Lamp	C5W
Courtesy Lamp	W5W
Rear Cargo Lamp	W5W

Exterior Bulbs

	Bulb Number
Front Low and High Beam Headlamp	HIR2LL
Front Parking/Daytime Running Lamps	W21/5W
Front Fog Lamps	H11LL
Front Side Marker Lamps	W3W
Front Turn Signal Lamps	WY21W
Side Direction Lamps	WY5W
Rear Turn Signal Lamps	PY21W
Rear Side Marker Lamps	W3W
Rear Tail and Stop Lamps	P21/5W

DEP DEALER ePROCESS

	Bulb Number
Rear Backup Lamps	W16W
Center High Mounted Stop Lamp	W5W
License Plate Lamps	LED (See Authorized Dealer)
NOTE: Numbers refer to commercial bulb types that can be purchased from an authorized dealer.	
If a bulb needs to be replaced, visit an authorized dealer or refer to the applicable Service Manual.	

Replacing Exterior Bulbs

Headlamps Low Beam And High Beam

1. Remove the plastic cap from the back of the headlamp housing.
2. Rotate the bulb counter-clockwise.
3. Remove the bulb and replace as needed.
4. Install the bulb and rotate clockwise to lock in place.
5. Reinstall the plastic cap.

Front Turn Signal, Parking And Daytime Running Lamps

1. Turn the steering wheel completely to the left or right.
2. Open the wheel housing access door.

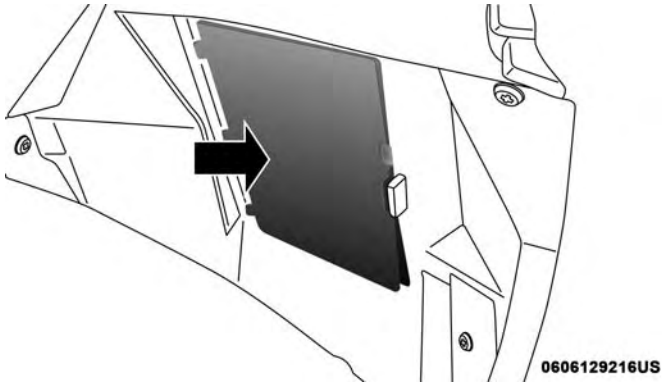

Wheel Housing Access Door

3. Remove the plastic cap from the back of the lamp housing.
4. Rotate bulb/socket counter-clockwise.
5. Remove the bulb and replace as needed.

DEP DEALER ePROCESS

6. Install the bulb into socket, and rotate bulb/socket clockwise into lamp locking it in place.
7. Reinstall the plastic cap.

Front Fog Lamps

To replace the front fog lights, see an authorized dealer.

Front/Rear Side Marker Lamps

1. Remove portion of the wheel liner to allow hand access to side marker lamp.
2. Rotate the bulb socket counterclockwise, and remove the bulb and socket assembly from the housing.
3. Pull the bulb from the socket and insert the replacement bulb.
4. Install the bulb and socket assembly into the housing, and rotate the socket clockwise to lock it in place.
5. Reinstall the wheel liner.

Rear Tail, Stop, Backup And Turn Signal Lamps

1. Open the liftgate.
2. Remove the two screws and remove the tail lamp assembly.

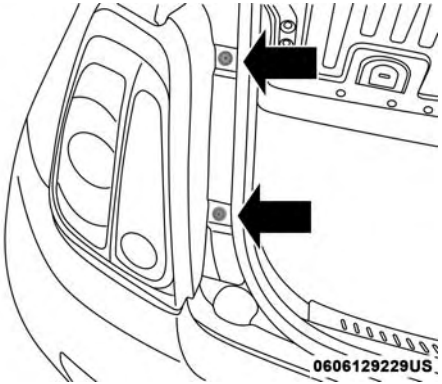

Tail Lamp Assembly Screws

3. Remove four screws and separate the backplate from the lamp housing.
4. Remove the tail, stop, or turn signal bulbs by pushing them slightly and turning counter-clockwise.
5. Remove the backup lamp bulb by pulling straight out.
6. Replace lamps as required and reinstall lamp.

DEP DEALER ePROCESS

Replacing Interior Bulbs

Rear Cargo Lamp

1. Using a suitable tool open the light box.
2. Pull the bulb out.
3. Replace the bulb, and reinstall the light box cover.

FUSES

WARNING!

- **When replacing a blown fuse, always use an appropriate replacement fuse with the same amp rating as the original fuse. Never replace a fuse with another fuse of higher amp rating. Never replace a blown fuse with metal wires or any other material. Do not place a fuse inside a circuit breaker cavity or vice versa. Failure to use proper fuses may result in serious personal injury, fire and/or property damage.**
- **Before replacing a fuse, make sure that the ignition is off and that all the other services are switched off and/or disengaged.**
- **If the replaced fuse blows again, contact an authorized dealer.**

(Continued)

WARNING! ***(Continued)***

- **If a general protection fuse for safety systems (air bag system, braking system), power unit systems (engine system, transmission system) or steering system blows, contact an authorized dealer.**

Interior Fuses

The interior fuse panel is part of the Body Control Module (BCM) and is located on the driver's side under the instrument panel.

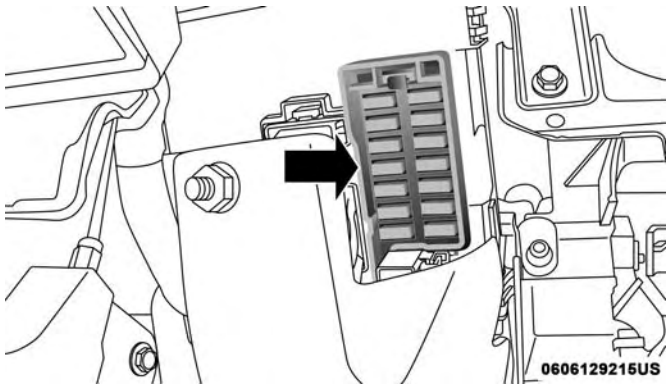

Fuse Panel

DEALER ePROCESS

Cavity	Vehicle Fuse Number	Mini Fuse	Description
1	F12	7.5 Amp Brown	Right Low Beam
2	F32	5 Amp Tan	Front and Rear Ceiling Lights Trunk and Door Courtesy Lights
3	F53	5 Amp Tan	Instrument Panel Node
4	F38	20 Amp Yellow	Central Door Locking
5	F36	10 Amp Red	Diagnostic Socket, Vehicle Radio, Climate Control System
6	F43	20 Amp Yellow	Bi-Directional Washer
7	F48	20 Amp Yellow	Passenger Power Window
8	F13	7.5 Amp Brown	Left Low Beam, Headlamp Leveling
9	F50	7.5 Amp Brown	Airbag
10	F51	5 Amp Tan	Vehicle Radio Switch, Climate Control System, Stop Light, Clutch
11	F37	5 Amp Tan	Stop Light Switch, Instrument Panel Node
12	F49	5 Amp Tan	Exterior Mirror, GPS, Electric Mirror, Parking Sensor
13	F31	5 Amp Tan	Ignition, Climate Control
14	F47	20 Amp Yellow	Driver Power Window

DEP DEALER ePROCESS

Underhood Fuses

The Front Distribution Unit is located on the right side of the engine compartment, next to the battery. To access the fuses, press the release tabs and remove the cover.

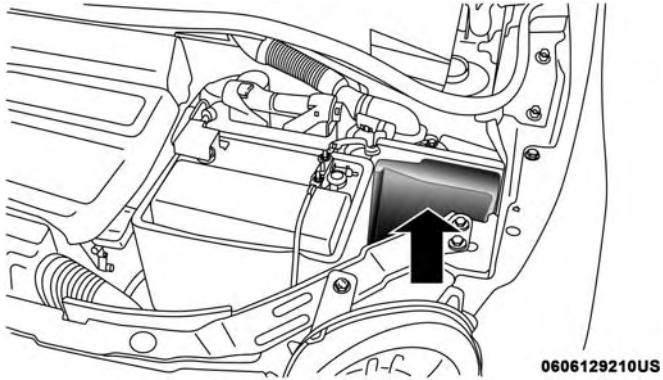

Front Distribution Unit

The ID number of the electrical component corresponding to each fuse can be found on the back of the cover.

Cavity	Maxi Fuse	Mini Fuse	Description
F01	60 Amp Blue	–	Body Controller
F02	20 Amp Yellow	–	Audio Amplifier
F03	20 Amp Yellow	–	Ignition Switch
F04	40 Amp Orange	–	Anti-Lock Brake Pump
F05	70 Amp Tan	–	Electric Power Steering
F06	20 Amp Yellow	–	Radiator Fan - Single Speed

DEP
DEALER ePROCESS

Cavity	Maxi Fuse	Mini Fuse	Description
F06	30 Amp Green	–	Radiator Fan - Low Speed
F07	40 Amp Orange	–	Radiator Fan - High Speed
F08	40 Amp Orange	–	Blower Motor
F09	–	10 Amp Red	Powertrain
F10	–	10 Amp Red	Horn
F11	–	15 Amp Blue	Powertrain
F11	–	10 Amp Red	Powertrain (Multiair – If Equipped)
F14	–	5 Amp Tan	High Beam (Shutter)
F15	–	15 Amp Blue	Cigar Lighter
F16	–	7.5 Amp Brown	Transmission
F17	–	25 Amp Clear	Powertrain (Multiair – If Equipped)
F17	–	15 Amp Blue	Powertrain
F18	–	15 Amp Blue	Powertrain
F18	–	5 Amp Tan	Powertrain (Multiair – If Equipped)
F19	–	7.5 Amp Brown	Air Conditioning
F20	–	15 Amp Blue	Heated Seats – If Equipped
F21	–	15 Amp Blue	Fuel Pump
F22	–	20 Amp Yellow	Powertrain
F23	–	20 Amp Yellow	Anti-Lock Brake Valves
F24	–	7.5 Amp Brown	Stability Control System

DEALER ePROCESS

Cavity	Maxi Fuse	Mini Fuse	Description
F30	–	15 Amp Blue	Fog Lamps
F82	30 Amp Green	–	Sunroof/Convertible Top
F83	20 Amp Yellow	–	Cooling Pump – If Equipped
F84	–	10 Amp Red	Transmission
F85	30 Amp Green	–	Rear Defroster
F87	–	5 Amp Tan	Rear Defroster
F90	–	5 Amp Tan	Heated Mirrors – If Equipped

TIRE SERVICE KIT — IF EQUIPPED

Small punctures up to 1/4 inch (6 mm) in the tire tread can be sealed with Tire Service Kit. Foreign objects (e.g., screws or nails) should not be removed from the tire. Tire Service Kit can be used in outside temperatures down to approximately -4°F (-20°C).

This kit will provide a temporary tire seal, allowing you to drive your vehicle up to 100 miles (160 km) with a maximum speed of 50 mph (80 km/h).

Tire Service Kit Storage

The Tire Service Kit is located under the front driver's seat.

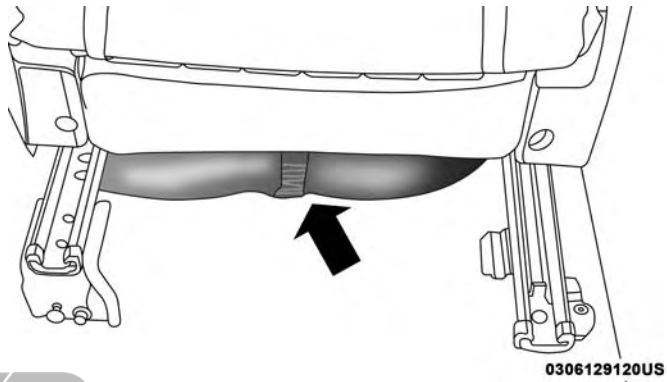

Tire Service Kit Location

DEP DEALER ePROCESS

Tire Service Kit Components And Operation

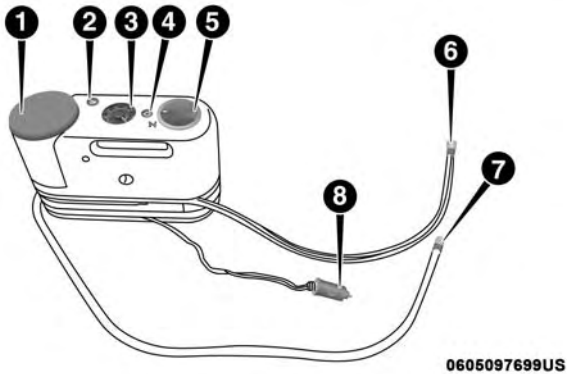

Tire Service Kit Components

1 — Sealant Bottle	5 — Mode Select Knob
2 — Deflation Button	6 — Sealant Hose (Clear)
3 — Pressure Gauge	7 — Air Pump Hose (Black)
4 — Power Button	8 — Power Plug (located on the bottom side of the Tire Service Kit)

Using The Mode Select Knob And Hoses

Your Tire Service Kit is equipped with the following symbols to indicate the air or sealant mode.

Selecting Air Mode

Push in the Mode Select Knob (5) and turn to this position for air pump operation only. Use the Black Air Pump Hose (7) when selecting this mode.

Selecting Sealant Mode

Push in the Mode Select Knob (5) and turn to this position to inject the Tire Service Kit Sealant and to inflate the tire. Use the Sealant Hose (clear hose) (6) when selecting this mode.

Using The Power Button

Push and release the Power Button (4) once to turn on the Tire Service Kit. Push and release the Power Button (4) again to turn Off the Tire Service Kit.

Using The Deflation Button

Push the Deflation Button (2) to reduce the air pressure in the tire if it becomes over-inflated.

DEP DEALER ePROCESS

Tire Service Kit Usage Precautions

- Replace the Tire Service Kit Sealant Bottle (1) and Sealant Hose (6) prior to the expiration date (printed at the lower right hand corner on the bottle label) to assure optimum operation of the system. Refer to "Sealing A Tire With Tire Service Kit" section (F) "Sealant Bottle And Hose Replacement".

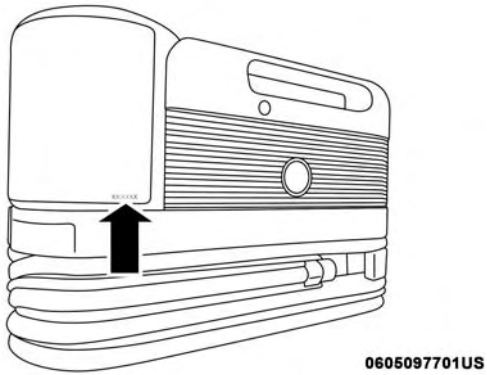

Tire Service Kit Expiration Date Location

- The Sealant Bottle (1) and Sealant Hose (6) are a one tire application use and need to be replaced after each use. Always replace these components immediately at your original equipment vehicle dealer.
- When the Tire Service Kit sealant is in a liquid form, clean water and a damp cloth will remove the material from the vehicle or tire and wheel components. Once the sealant dries, it can easily be peeled off and properly discarded.
- For optimum performance, make sure the valve stem on the wheel is free of debris before connecting the Tire Service Kit.
- You can use the Tire Service Kit air pump to inflate bicycle tires. The kit also comes with two needles, located in the Accessory Storage Compartment (on the bottom of the air pump) for inflating sport balls, rafts, or similar inflatable items. However, use only the Air Pump Hose (7) and make sure the Mode Select Knob (5) is in the Air Mode when inflating such items to avoid injecting sealant into them. The Tire Service Kit Sealant is only intended to seal punctures less than 1/4 inch (6 mm) diameter in the tread of your tire.
- Do not lift or carry the Tire Service Kit by the hoses.

DEP
DEALER ePROCESS

WARNING!

- Do not attempt to seal a tire on the side of the vehicle closest to traffic. Pull far enough off the road to avoid the danger of being hit when using the Tire Service Kit.
- Do not use Tire Service Kit or drive the vehicle under the following circumstances:
  - If the puncture in the tire tread is approximately 1/4 inch (6 mm) or larger.
  - If the tire has any sidewall damage.
  - If the tire has any damage from driving with extremely low tire pressure.
  - If the tire has any damage from driving on a flat tire.
  - If the wheel has any damage.
  - If you are unsure of the condition of the tire or the wheel.
- Keep Tire Service Kit away from open flames or heat source.
- A loose Tire Service Kit thrown forward in a collision or hard stop could endanger the occupants of the vehicle. Always stow the Tire Service Kit in the place

(Continued)

WARNING! *(Continued)*

provided. Failure to follow these warnings can result in injuries that are serious or fatal to you, your passengers, and others around you.

- Take care not to allow the contents of Tire Service Kit to come in contact with hair, eyes, or clothing. Tire Service Kit sealant is harmful if inhaled, swallowed, or absorbed through the skin. It causes skin, eye, and respiratory irritation. Flush immediately with plenty of water if there is any contact with eyes or skin. Change clothing as soon as possible, if there is any contact with clothing.
- Tire Service Kit Sealant solution contains latex. In case of an allergic reaction or rash, consult a physician immediately. Keep Tire Service Kit out of reach of children. If swallowed, rinse mouth immediately with plenty of water and drink plenty of water. Do not induce vomiting! Consult a physician immediately.

DEP DEALER ePROCESS

Sealing A Tire With Tire Service Kit

(A) Whenever You Stop To Use Tire Service Kit:

1. Pull over to a safe location and turn on the vehicle's Hazard Warning flashers.
2. Verify that the valve stem (on the wheel with the deflated tire) is in a position that is near to the ground. This will allow the Tire Service Kit Hoses (6) and (7) to reach the valve stem and keep the Tire Service Kit flat on the ground. This will provide the best positioning of the kit when injecting the sealant into the deflated tire and running the air pump. Move the vehicle as necessary to place the valve stem in this position before proceeding.
3. Place the transmission in PARK (auto transmission) or in Gear (manual transmission) and place the ignition in the OFF position.
4. Apply the parking brake.

(B) Setting Up To Use Tire Service Kit:

1. Push in the Mode Select Knob (5) and turn to the Sealant Mode position.
2. Uncoil the Sealant Hose (6) and then remove the cap from the fitting at the end of the hose.
3. Place the Tire Service Kit flat on the ground next to the deflated tire.
4. Remove the cap from the valve stem and then screw the fitting at the end of the Sealant Hose (6) onto the valve stem.
5. Uncoil the Power Plug (8) and insert the plug into the vehicle's 12 Volt power outlet.

NOTE: Do not remove foreign objects (e.g., screws or nails) from the tire.

(C) Injecting Tire Service Kit Sealant Into The Deflated Tire:

- Always start the engine before turning ON the Tire Service Kit.

NOTE: Manual transmission vehicles must have the parking brake engaged and the gear selector in NEUTRAL.

- After pushing the Power Button (4), the sealant (white fluid) will flow from the Sealant Bottle (1) through the Sealant Hose (6) and into the tire.

NOTE: Sealant may leak out through the puncture in the tire.

DEP
DEALER ePROCESS

If the sealant (white fluid) does not flow within 0 – 10 seconds through the Sealant Hose (6):

1. Push the Power Button (4) to turn Off the Tire Service Kit. Disconnect the Sealant Hose (6) from the valve stem. Make sure the valve stem is free of debris. Reconnect the Sealant Hose (6) to the valve stem. Check that the Mode Select Knob (5) is in the Sealant Mode position and not Air Mode. Push the Power Button (4) to turn On the Tire Service Kit.
2. Connect the Power Plug (8) to a different 12 Volt power outlet in your vehicle or another vehicle, if available. Make sure the engine is running before turning ON the Tire Service Kit.
3. The Sealant Bottle (1) may be empty due to previous use. Call for assistance.

NOTE: If the Mode Select Knob (5) is on Air Mode and the pump is operating, air will dispense from the Air Pump Hose (7) only, not the Sealant Hose (6).

If the sealant (white fluid) does flow through the Sealant Hose (6):

1. Continue to operate the pump until sealant is no longer flowing through the hose (typically takes 30 - 70 seconds). As the sealant flows through the Sealant Hose (6), the Pressure Gauge (3) can read as high as 70 psi (4.8 Bar). The Pressure Gauge (3) will decrease quickly from approximately 70 psi (4.8 Bar) to the actual tire pressure when the Sealant Bottle (1) is empty.
2. The pump will start to inject air into the tire immediately after the Sealant Bottle (1) is empty. Continue to operate the pump and inflate the tire to the pressure indicated on the tire pressure label on the driver-side latch pillar (recommended pressure). Check the tire pressure by looking at the Pressure Gauge (3).

If the tire does not inflate to at least 26 psi (1.8 Bar) pressure within 15 minutes:

- The tire is too badly damaged. Do not attempt to drive the vehicle further. Call for assistance.

NOTE: If the tire becomes overinflated, push the Deflation Button (2) to reduce the tire pressure to the recommended inflation pressure before continuing.

DEP DEALER ePROCESS

If the tire inflates to the recommended pressure or is at least 26 psi (1.8 Bar) pressure within 15 minutes:

1. Push the Power Button (4) to turn off the Tire Service Kit.
2. Remove the Speed Limit sticker from the top of the Sealant Bottle (1) and place the sticker on the instrument panel.
3. Immediately disconnect the Sealant Hose (6) from the valve stem, reinstall the cap on the fitting at the end of the hose, and place the Tire Service Kit in the vehicle storage location. Quickly proceed to (D) "Drive Vehicle."

CAUTION!

- **The metal end fitting from Power Plug (8) may get hot after use, so it should be handled carefully.**
- **Failure to reinstall the cap on the fitting at the end of the Sealant Hose (6) can result in sealant contacting your skin, clothing, and the vehicle's interior. It can also result in sealant contacting internal Tire Service Kit components which may cause permanent damage to the kit.**

(D) Drive Vehicle:

Immediately after injecting sealant and inflating the tire, drive the vehicle 5 miles (8 km) or ten minutes to ensure distribution of the Tire Service Kit Sealant within the tire. Do not exceed 50 mph (80 km/h).

WARNING!

Tire Service Kit is not a permanent flat tire repair. Have the tire inspected and repaired or replaced after using Tire Service Kit. Do not exceed 50 mph (80 km/h) until the tire is repaired or replaced. Failure to follow this warning can result in injuries that are serious or fatal to you, your passengers, and others around you.

(E) After Driving:

Pull over to a safe location. Refer to "Whenever You Stop To Use Tire Service Kit" before continuing.

1. Push in the Mode Select Knob (5) and turn to the Air Mode position.
2. Uncoil the power plug and insert the plug into the vehicle's 12 Volt power outlet.

DEP DEALER ePROCESS

3. Uncoil the Air Pump Hose (7) (black in color) and screw the fitting at the end of hose (7) onto the valve stem.
4. Check the pressure in the tire by reading the Pressure Gauge (3).

If tire pressure is less than 19 psi (1.3 Bar):

The tire is too badly damaged. Do not attempt to drive the vehicle further. Call for assistance.

If the tire pressure is 19 psi (1.3 Bar) or higher:

1. Push the Power Button (4) to turn on Tire Service Kit and inflate the tire to the pressure indicated on the tire and loading information label on the driver-side door opening.

NOTE: If the tire becomes over-inflated, push the Deflation Button to reduce the tire pressure to the recommended inflation pressure before continuing.

2. Disconnect the Tire Service Kit from the valve stem, reinstall the cap on the valve stem and unplug from 12 Volt outlet.
3. Place the Tire Service Kit in its proper storage area in the vehicle.
4. Have the tire inspected and repaired or replaced at the earliest opportunity at an authorized dealer or tire service center.
5. Remove the Speed Limit sticker from the instrument panel after the tire has been repaired.
6. Replace the Sealant Bottle (1) and Sealant Hose (6) assembly at an authorized dealer as soon as possible. Refer to “(F) Sealant Bottle And Hose Replacement”.

NOTE: When having the tire serviced, advise the authorized dealer or service center that the tire has been sealed using the Tire Service Kit.

(F) Sealant Bottle And Hose Replacement:

1. Uncoil the Sealant Hose (6) (clear in color).
2. Locate the round Sealant Bottle release button in the recessed area under the sealant bottle.
3. Push the Sealant Bottle release button. The Sealant Bottle (1) will pop up. Remove the bottle and dispose of it accordingly.
4. Clean any remaining sealant from the Tire Service Kit housing.

DEP
DEALER ePROCESS

5. Position the new Sealant Bottle (1) in the housing so that the Sealant Hose (6) aligns with the hose slot in the front of the housing. Push the bottle into the housing. An audible click will be heard indicating the bottle is locked into place.
6. Verify that the cap is installed on the fitting at the end of the Sealant Hose (6) and return the hose to its storage area (located on the bottom of the air pump).
7. Return the Tire Service Kit to its storage location in the vehicle.

TIRE SERVICE KIT — IF EQUIPPED

Small punctures up to 1/4 inch (6 mm) in the tire tread can be sealed with Tire Service Kit. Foreign objects (e.g., screws or nails) should not be removed from the tire. Tire Service Kit can be used in outside temperatures down to approximately -4°F (-20°C).

This kit will provide a temporary tire seal, allowing you to drive your vehicle up to 100 miles (160 km) with a maximum speed of 50 mph (80 km/h).

Tire Service Kit Storage

The Tire Service Kit is located under the front driver's seat.

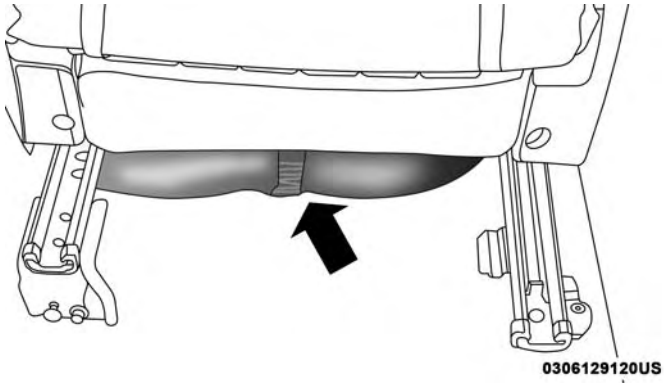

Tire Service Kit Location

DEP
DEALER ePROCESS

Tire Service Kit Components And Operation

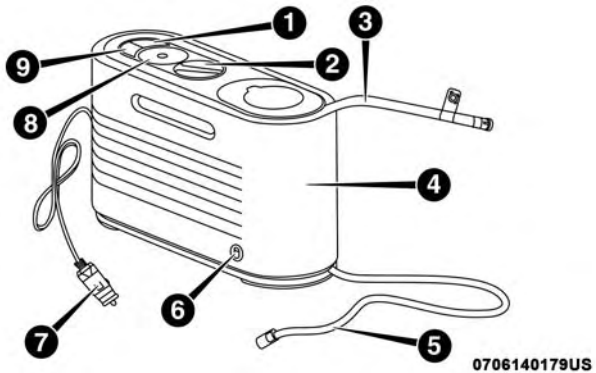

Tire Service Kit Components

1 — Power Button	4 — Sealant Bottle	7 — Power Plug
2 — Mode Select Knob	5 — Air Pump Hose (Black)	8 — Pressure Gauge
3 — Sealant Hose (Clear)	6 — Sealant Bottle Release Button	9 — Deflation Button

Using The Mode Select Knob And Hoses

Your Tire Service Kit is equipped with the following symbols to indicate the air or sealant mode.

Selecting Air Mode

Push in the Mode Select Knob (2) and turn to this position for air pump operation only. Use the Black Air Pump Hose (5) when selecting this mode.

Selecting Sealant Mode

Push in the Mode Select Knob (2) and turn to this position to inject the Tire Service Kit Sealant and to inflate the tire. Use the Sealant Hose (clear hose) (3) when selecting this mode.

Using The Power Button

Push and release the Power Button (1) once to turn on the Tire Service Kit. Push and release the Power Button (1) again to turn Off the Tire Service Kit.

Using The Deflation Button

Push the Deflation Button (9) to reduce the air pressure in the tire if it becomes over-inflated.

DEP DEALER ePROCESS

Tire Service Kit Usage Precautions

- Replace the Tire Service Kit Sealant Bottle (4) and Sealant Hose (3) prior to the expiration date (printed at the upper right hand corner on the bottle label) to assure optimum operation of the system. Refer to “Sealing A Tire With Tire Service Kit” section (F) “Sealant Bottle And Hose Replacement”.

Tire Service Kit Sealant Expiration Date Location

- The Sealant Bottle (4) and Sealant Hose (3) are a one tire application use and need to be replaced after each use. Always replace these components immediately at your original equipment vehicle dealer.
- When the Tire Service Kit sealant is in a liquid form, clean water and a damp cloth will remove the material from the vehicle or tire and wheel components. Once the sealant dries, it can easily be peeled off and properly discarded.
- For optimum performance, make sure the valve stem on the wheel is free of debris before connecting the Tire Service Kit.
- You can use the Tire Service Kit air pump to inflate bicycle tires. The kit also comes with two needles, located in the Accessory Storage Compartment (on the bottom of the air pump) for inflating sport balls, rafts, or similar inflatable items. However, use only the Air Pump Hose (5) and make sure the Mode Select Knob (2) is in the Air Mode when inflating such items to avoid injecting sealant into them. The Tire Service Kit Sealant is only intended to seal punctures less than 1/4 inch (6 mm) diameter in the tread of your tire.
- Do not lift or carry the Tire Service Kit by the hoses.

DEP DEALER ePROCESS

WARNING!

- Do not attempt to seal a tire on the side of the vehicle closest to traffic. Pull far enough off the road to avoid the danger of being hit when using the Tire Service Kit.
- Do not use Tire Service Kit or drive the vehicle under the following circumstances:
  - If the puncture in the tire tread is approximately 1/4 inch (6 mm) or larger.
  - If the tire has any sidewall damage.
  - If the tire has any damage from driving with extremely low tire pressure.
  - If the tire has any damage from driving on a flat tire.
  - If the wheel has any damage.
  - If you are unsure of the condition of the tire or the wheel.
- Keep Tire Service Kit away from open flames or heat source.
- A loose Tire Service Kit thrown forward in a collision or hard stop could endanger the occupants of the vehicle. Always stow the Tire Service Kit in the place

(Continued)

WARNING! *(Continued)*

provided. Failure to follow these warnings can result in injuries that are serious or fatal to you, your passengers, and others around you.

- Take care not to allow the contents of Tire Service Kit to come in contact with hair, eyes, or clothing. Tire Service Kit sealant is harmful if inhaled, swallowed, or absorbed through the skin. It causes skin, eye, and respiratory irritation. Flush immediately with plenty of water if there is any contact with eyes or skin. Change clothing as soon as possible, if there is any contact with clothing.
- Tire Service Kit Sealant solution contains latex. In case of an allergic reaction or rash, consult a physician immediately. Keep Tire Service Kit out of reach of children. If swallowed, rinse mouth immediately with plenty of water and drink plenty of water. Do not induce vomiting! Consult a physician immediately.

DEP DEALER ePROCESS

Sealing A Tire With Tire Service Kit

(A) Whenever You Stop To Use Tire Service Kit:

1. Pull over to a safe location and turn on the vehicle's Hazard Warning flashers.
2. Verify that the valve stem (on the wheel with the deflated tire) is in a position that is near to the ground. This will allow the Tire Service Kit Hoses (3) and (5) to reach the valve stem and keep the Tire Service Kit flat on the ground. This will provide the best positioning of the kit when injecting the sealant into the deflated tire and running the air pump. Move the vehicle as necessary to place the valve stem in this position before proceeding.
3. Place the transmission in PARK (auto transmission) or in Gear (manual transmission) and place the ignition in the OFF position.
4. Apply the parking brake.

(B) Setting Up To Use Tire Service Kit:

1. Push in the Mode Select Knob (2) and turn to the Sealant Mode position.
2. Uncoil the Sealant Hose (3) and then remove the cap from the fitting at the end of the hose.
3. Place the Tire Service Kit flat on the ground next to the deflated tire.
4. Remove the cap from the valve stem and then screw the fitting at the end of the Sealant Hose (3) onto the valve stem.
5. Uncoil the Power Plug (7) and insert the plug into the vehicle's 12 Volt power outlet.

NOTE: Do not remove foreign objects (e.g., screws or nails) from the tire.

(C) Injecting Tire Service Kit Sealant Into The Deflated Tire:

- Always start the engine before turning ON the Tire Service Kit.

NOTE: Manual transmission vehicles must have the parking brake engaged and the gear selector in NEUTRAL.

- After pushing the Power Button (1), the sealant (white fluid) will flow from the Sealant Bottle (4) through the Sealant Hose (3) and into the tire.

NOTE: Sealant may leak out through the puncture in the tire.

DEP DEALER ePROCESS

If the sealant (white fluid) does not flow within 0 – 10 seconds through the Sealant Hose (3):

1. Push the Power Button (1) to turn Off the Tire Service Kit. Disconnect the Sealant Hose (3) from the valve stem. Make sure the valve stem is free of debris. Reconnect the Sealant Hose (3) to the valve stem. Check that the Mode Select Knob (2) is in the Sealant Mode position and not Air Mode. Push the Power Button (1) to turn On the Tire Service Kit.
2. Connect the Power Plug (7) to a different 12 Volt power outlet in your vehicle or another vehicle, if available. Make sure the engine is running before turning ON the Tire Service Kit.
3. The Sealant Bottle (4) may be empty due to previous use. Call for assistance.

NOTE: If the Mode Select Knob (2) is on Air Mode and the pump is operating, air will dispense from the Air Pump Hose (5) only, not the Sealant Hose (3).

If the sealant (white fluid) does flow through the Sealant Hose (3):

1. Continue to operate the pump until sealant is no longer flowing through the hose (typically takes 30 - 70 seconds). As the sealant flows through the Sealant Hose (3), the Pressure Gauge (8) can read as high as 70 psi (4.8 Bar). The Pressure Gauge (8) will decrease quickly from approximately 70 psi (4.8 Bar) to the actual tire pressure when the Sealant Bottle (4) is empty.
2. The pump will start to inject air into the tire immediately after the Sealant Bottle (4) is empty. Continue to operate the pump and inflate the tire to the pressure indicated on the tire pressure label on the driver-side latch pillar (recommended pressure). Check the tire pressure by looking at the Pressure Gauge (8).

If the tire does not inflate to at least 26 psi (1.8 Bar) pressure within 15 minutes:

- The tire is too badly damaged. Do not attempt to drive the vehicle further. Call for assistance.

NOTE: If the tire becomes overinflated, push the Deflation Button to reduce the tire pressure to the recommended inflation pressure before continuing.

DEP DEALER ePROCESS

If the tire inflates to the recommended pressure or is at least 26 psi (1.8 Bar) pressure within 15 minutes:

1. Push the Power Button (1) to turn off the Tire Service Kit.
2. Remove the Speed Limit sticker from the top of the Sealant Bottle (4) and place the sticker on the instrument panel.
3. Immediately disconnect the Sealant Hose (3) from the valve stem, reinstall the cap on the fitting at the end of the hose, and place the Tire Service Kit in the vehicle storage location. Quickly proceed to (D) "Drive Vehicle."

CAUTION!

- **The metal end fitting from Power Plug (8) may get hot after use, so it should be handled carefully.**
- **Failure to reinstall the cap on the fitting at the end of the Sealant Hose (6) can result in sealant contacting your skin, clothing, and the vehicle's interior. It can also result in sealant contacting internal Tire Service Kit components which may cause permanent damage to the kit.**

(D) Drive Vehicle:

Immediately after injecting sealant and inflating the tire, drive the vehicle 5 miles (8 km) or ten minutes to ensure distribution of the Tire Service Kit Sealant within the tire. Do not exceed 50 mph (80 km/h).

WARNING!

Tire Service Kit is not a permanent flat tire repair. Have the tire inspected and repaired or replaced after using Tire Service Kit. Do not exceed 50 mph (80 km/h) until the tire is repaired or replaced. Failure to follow this warning can result in injuries that are serious or fatal to you, your passengers, and others around you.

(E) After Driving:

Pull over to a safe location. Refer to "(A) Whenever You Stop To Use Tire Service Kit" before continuing.

1. Push in the Mode Select Knob (2) and turn to the Air Mode position.
2. Uncoil the power plug and insert the plug into the vehicle's 12 Volt power outlet.
3. Uncoil the Air Pump Hose (5) (black in color) and screw the fitting at the end of hose onto the valve stem.

DEP DEALER ePROCESS

4. Check the pressure in the tire by reading the Pressure Gauge (8).

If tire pressure is less than 19 psi (1.3 Bar):

The tire is too badly damaged. Do not attempt to drive the vehicle further. Call for assistance.

If the tire pressure is 19 psi (1.3 Bar) or higher:

1. Push the Power Button (1) to turn on Tire Service Kit and inflate the tire to the pressure indicated on the tire and loading information label on the driver-side door opening.

NOTE: If the tire becomes over-inflated, push the Deflation Button to reduce the tire pressure to the recommended inflation pressure before continuing.

2. Disconnect the Tire Service Kit from the valve stem, reinstall the cap on the valve stem and unplug from 12 Volt outlet.
3. Place the Tire Service Kit in its proper storage area in the vehicle.
4. Have the tire inspected and repaired or replaced at the earliest opportunity at an authorized dealer or tire service center.
5. Remove the Speed Limit sticker from the instrument panel after the tire has been repaired.
6. Replace the Sealant Bottle (4) and Sealant Hose (3) assembly at an authorized dealer as soon as possible. Refer to “(F) Sealant Bottle And Hose Replacement”.

NOTE: When having the tire serviced, advise the authorized dealer or service center that the tire has been sealed using the Tire Service Kit.

(F) Sealant Bottle And Hose Replacement:

1. Uncoil the Sealant Hose (3) (clear in color).
2. Locate the red colored round Sealant Bottle release button at the lower right hand corner of the kit.
3. Push and hold the Sealant Bottle release button, then pull out the bottle holding the button.
4. Clean any remaining sealant from the Tire Service Kit housing.
5. Position the new Sealant Bottle (4) in the housing so that the Sealant Hose (3) aligns with the hose slot in the front of the housing. Push and hold the Sealant Bottle release button, then push the bottle into the housing by holding

DEP DEALER ePROCESS

the button. An audible click will be heard indicating the bottle is locked into place. Release the button.

6. Verify that the cap is installed on the fitting at the end of the Sealant Hose (3) and return the hose to its storage area (located on top of the housing).
7. Return the Tire Service Kit to its storage location in the vehicle.

JUMP STARTING PROCEDURE

If your vehicle has a discharged battery, it can be jump-started using a set of jumper cables and a battery in another vehicle or by using a portable battery booster pack. Jump starting can be dangerous if done improperly so please follow the procedures in this section carefully.

NOTE: When using a portable battery booster pack, follow the manufacturer's operating instructions and precautions.

WARNING!

Do not attempt jump starting if the battery is frozen. It could rupture or explode and cause personal injury.

CAUTION!

Do not use a portable battery booster pack or any other booster source with a system voltage greater than 12 Volts or damage to the battery, starter motor, alternator or electrical system may occur.

Preparations For Jump Start

The battery in your vehicle is located between the left front headlight assembly and the left front wheel splash shield.

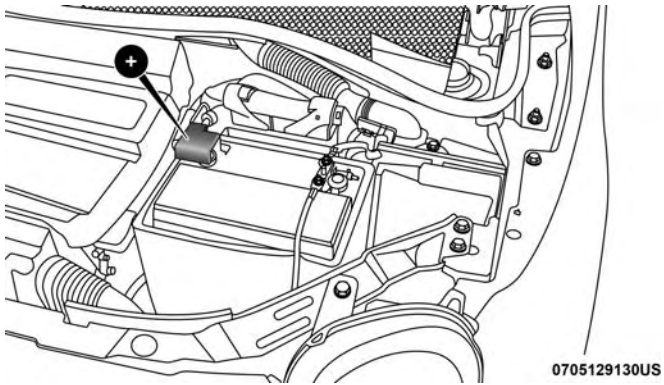

Positive Battery Post Location

DEP
DEALER ePROCESS

WARNING!

- **Take care to avoid the radiator cooling fan whenever the hood is raised. It can start anytime the ignition switch is ON. You can be injured by moving fan blades.**
- **Remove any metal jewelry such as rings, watch bands and bracelets that could make an inadvertent electrical contact. You could be seriously injured.**
- **Batteries contain sulfuric acid that can burn your skin or eyes and generate hydrogen gas which is flammable and explosive. Keep open flames or sparks away from the battery.**

1. Apply the parking brake, shift the automatic transmission into PARK and turn the ignition to LOCK.
2. Turn off the heater, radio, and all unnecessary electrical accessories.
3. Remove the protective cover over the positive **(+)** battery post. To remove the cover, push the locking tab and pull upward on the cover.
4. If using another vehicle to jump start the battery, park the vehicle within the jumper cables reach, apply the parking brake and make sure the ignition is OFF.

WARNING!

Do not allow vehicles to touch each other as this could establish a ground connection and personal injury could result.

Jump Starting Procedure

WARNING!

Failure to follow this jump starting procedure could result in personal injury or property damage due to battery explosion.

CAUTION!

Failure to follow these procedures could result in damage to the charging system of the booster vehicle or the discharged vehicle.

DEP DEALER ePROCESS

Connecting The Jumper Cables

1. Connect the positive **(+)** end of the jumper cable to the positive **(+)** post of the discharged vehicle.
2. Connect the opposite end of the positive **(+)** jumper cable to the positive **(+)** post of the booster battery.
3. Connect the negative end **(-)** of the jumper cable to the negative **(-)** post of the booster battery.
4. Connect the opposite end of the negative **(-)** jumper cable to a good engine ground (exposed metal part of the discharged vehicle's engine) away from the battery and the fuel injection system.

WARNING!

Do not connect the jumper cable to the negative (-) post of the discharged battery. The resulting electrical spark could cause the battery to explode and could result in personal injury. Only use the specific ground point, do not use any other exposed metal parts.

5. Start the engine in the vehicle that has the booster battery, let the engine idle a few minutes, and then start the engine in the vehicle with the discharged battery.
6. Once the engine is started, remove the jumper cables in the reverse sequence.

Disconnecting The Jumper Cables

1. Disconnect the negative **(-)** jumper cable from the engine ground **(-)** of the vehicle with the discharged battery.
2. Disconnect the negative end **(-)** of the jumper cable from the negative **(-)** post of the booster battery.
3. Disconnect the opposite end of the positive **(+)** jumper cable from the positive **(+)** post of the booster battery.
4. Disconnect the positive **(+)** end of the jumper cable from the positive **(+)** post of the discharged vehicle.

If frequent jump starting is required to start your vehicle, you should have the battery and charging system inspected at an authorized dealer.

CAUTION!

Accessories plugged into the vehicle power outlets draw power from the vehicle's battery, even when not in use (i.e., cellular devices, etc.). Eventually, if plugged

(Continued)

DEP DEALER ePROCESS

CAUTION! *(Continued)*

in long enough without engine operation, the vehicle's battery will discharge sufficiently to degrade battery life and/or prevent the engine from starting.

GEAR SELECTOR OVERRIDE

If a malfunction occurs and the gear selector cannot be moved out of the PARK position, you can use the following procedure to temporarily move the gear selector:

1. Turn the engine OFF.
2. Firmly apply the parking brake.
3. Remove the gear selector override access cover (located on the right side of the gear selector housing) by prying at the bottom edge of the cover.

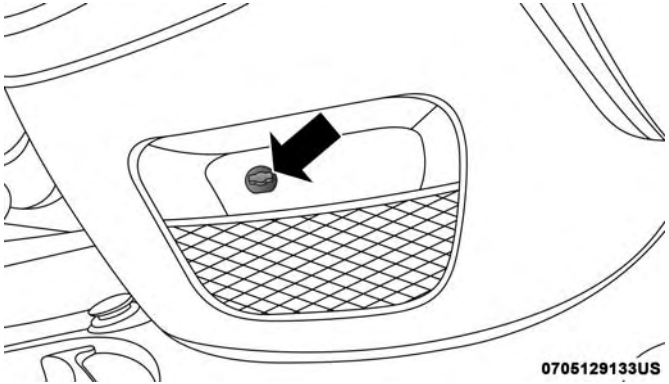

Gear Selector Override Access Hole

4. Press and maintain firm pressure on the brake pedal.
5. Insert a small screwdriver or similar tool into the access hole, and push and hold the override release lever in.
6. Move the gear selector to the NEUTRAL position.
7. The vehicle may then be started in NEUTRAL.
8. Reinstall the gear selector override access cover.

DEP DEALER ePROCESS

IF YOUR ENGINE OVERHEATS

In any of the following situations, you can reduce the potential for overheating by taking the appropriate action.

- On the highways — slow down.
- In city traffic — while stopped, place the transmission in NEUTRAL, but do not increase engine idle speed.

NOTE: There are steps that you can take to slow down an impending overheat condition:

- If your air conditioner (A/C) is on, turn it off. The A/C system adds heat to the engine cooling system and turning the A/C off can help remove this heat.
- You can also turn the temperature control to maximum heat, the mode control to floor and the blower control to high. This allows the heater core to act as a supplement to the radiator and aids in removing heat from the engine cooling system.

WARNING!

You or others can be badly burned by hot engine coolant (antifreeze) or steam from your radiator. If you see or hear steam coming from under the hood, do not

(Continued)

WARNING! *(Continued)*

open the hood until the radiator has had time to cool. Never try to open a cooling system pressure cap when the radiator or coolant bottle is hot.

CAUTION!

Driving with a hot cooling system could damage your vehicle. If the pointer rises to the H (red) mark, the instrument cluster will sound a chime. When safe, pull over and stop the vehicle with the engine at idle. Turn off the air conditioning and wait until the pointer drops back into the normal range. If the pointer remains on the H (red) mark for more than a minute, turn the engine off immediately and call for service.

FREEING A STUCK VEHICLE

If your vehicle becomes stuck in mud, sand or snow, it can often be moved using a rocking motion. Turn the steering wheel right and left to clear the area around the front wheels. Then shift back and forth between DRIVE and REVERSE (with automatic transmission) or SECOND

DEP DEALER ePROCESS

GEAR and REVERSE (with manual transmission), while gently pressing the accelerator. Use the least amount of accelerator pedal pressure that will maintain the rocking motion, without spinning the wheels, or racing the engine.

NOTE: Push the "ESC Off" switch, to place the Electronic Stability Control (ESC) system in "Partial Off" mode, before rocking the vehicle. Refer to "Electronic Brake Control" in "Safety" for further information. Once the vehicle has been freed, push the "ESC Off" switch again to restore "ESC On" mode.

WARNING!

Fast spinning tires can be dangerous. Forces generated by excessive wheel speeds may cause damage, or even failure, of the axle and tires. A tire could explode and injure someone. Do not spin your vehicle's wheels faster than 30 mph (48 km/h) or for longer than 30 seconds continuously without stopping when you are stuck and do not let anyone near a spinning wheel, no matter what the speed.

CAUTION!

- **Racing the engine or spinning the wheels may lead to transmission overheating and failure. Allow the engine to idle with the transmission in NEUTRAL for at least one minute after every five rocking-motion cycles. This will minimize overheating and reduce the risk of clutch or transmission failure during prolonged efforts to free a stuck vehicle.**
- **When "rocking" a stuck vehicle by shifting between DRIVE/SECOND GEAR and REVERSE, do not spin the wheels faster than 15 mph (24 km/h), or drive-train damage may result.**
- **Revving the engine or spinning the wheels too fast may lead to transmission overheating and failure. It can also damage the tires. Do not spin the wheels above 30 mph (48 km/h) while in gear (no transmission shifting occurring).**

DEP DEALER ePROCESS

TOWING A DISABLED VEHICLE

This section describes procedures for towing a disabled vehicle using a commercial towing service.

Towing Condition	Wheels OFF The Ground	Automatic Transmission	Manual Transmission
Flat Tow	NONE	**NOT ALLOWED**	**If transmission is operable:** • Transmission in **NEUTRAL** • 65 mph (104 km/h) **max** speed
Wheel Lift Or Dolly Tow	Rear	**NOT ALLOWED**	**NOT ALLOWED**
	Front	OK	OK
Flatbed	**ALL**	**BEST METHOD**	**BEST METHOD**

Proper towing or lifting equipment is required to prevent damage to your vehicle. Use only tow bars and other equipment designed for this purpose, following equipment manufacturer's instructions. Use of safety chains is mandatory. Attach a tow bar or other towing device to main structural members of the vehicle, not to bumpers or associated brackets. State and local laws regarding vehicles under tow must be observed.

If you must use the accessories (wipers, defrosters, etc.) while being towed, the ignition must be in the ON/RUN mode.

CAUTION!

- **Do not use sling type equipment when towing. Vehicle damage may occur.**

(Continued)

DEP DEALER ePROCESS

CAUTION! *(Continued)*

- **When securing the vehicle to a flat bed truck, do not attach to front or rear suspension components. Damage to your vehicle may result from improper towing.**

Automatic Transmission

- Vehicle can be towed with the front wheels elevated.
- Vehicle can be towed on a flatbed truck (all wheels off the ground).

If the ignition key is unavailable, or the vehicle's battery is discharged, refer to "Gear Selector Override" in this section for instructions on shifting the transmission out of PARK in order to move the vehicle.

CAUTION!

- **DO NOT flat tow any vehicle equipped with an automatic transmission. Damage to the drivetrain will result. If these vehicles require towing, make sure all drive wheels are OFF the ground.**

(Continued)

CAUTION! *(Continued)*

- **Towing this vehicle in violation of the above requirements can cause severe transmission damage. Damage from improper towing is not covered under the New Vehicle Limited Warranty.**

Manual Transmission

- Vehicle can be flat towed (all four wheels on the ground) with the transmission in NEUTRAL.
- Vehicle can be towed with the front wheels elevated.
- Vehicle can be towed on a flatbed truck (all wheels off the ground).

CAUTION!

Towing this vehicle in violation of the above requirements can cause severe engine and/or transmission damage. Damage from improper towing is not covered under the New Vehicle Limited Warranty.

DEP DEALER ePROCESS

ENHANCED ACCIDENT RESPONSE SYSTEM (EARS)

This vehicle is equipped with an Enhanced Accident Response System.

Please refer to “Occupant Restraint Systems” in “Safety” for further information on the Enhanced Accident Response System (EARS) function.

EVENT DATA RECORDER (EDR)

This vehicle is equipped with an Event Data Recorder (EDR). The main purpose of an EDR is to record data that will assist in understanding how a vehicle’s systems performed under certain crash or near crash-like situations, such as an air bag deployment or hitting a road obstacle.

Please refer to “Occupant Restraint Systems” in “Safety” for further information on the Event Data Recorder (EDR).

DEP
DEALER ePROCESS

SERVICING AND MAINTENANCE

CONTENTS

■ SCHEDULED SERVICING 231
- □ Maintenance Plan. 232

■ ENGINE COMPARTMENT — 1.4L LA 235
- □ Checking Oil Level 236
- □ Adding Washer Fluid 236
- □ Maintenance-Free Battery 237

■ DEALER SERVICE 238
- □ Engine Oil 238
- □ Engine Oil Filter 240
- □ Engine Air Cleaner Filter 240
- □ Air Conditioner Maintenance 240
- □ Body Lubrication 244
- □ Windshield Wiper Blades 245
- □ Exhaust System 247
- □ Cooling System 248
- □ Brake System 252
- □ Manual Transmission — If Equipped 254
- □ Automatic Transmission — If Equipped 254

■ RAISING THE VEHICLE 255

■ TIRES 256
- □ Tire Safety Information 256
- □ Tires — General Information 263
- □ Tire Types 269
- □ Spare Tires — If Equipped 270
- □ Wheel And Wheel Trim Care 273
- □ Tire Chains (Traction Devices) 274
- □ Tire Rotation Recommendations 275

DEP DEALER ePROCESS

■ DEPARTMENT OF TRANSPORTATION UNIFORM TIRE QUALITY GRADES 276
□ Treadwear 276
□ Traction Grades 276
□ Temperature Grades 276
■ VEHICLE STORAGE 277
■ BODYWORK 277
□ Protection From Atmospheric Agents 277
□ Body And Underbody Maintenance 278
□ Preserving The Bodywork 278
■ INTERIORS 281
□ Seats And Fabric Parts 281
□ Plastic And Coated Parts. 281
□ Leather Parts 282
□ Glass Surfaces 282

DEP
DEALER ePROCESS

SCHEDULED SERVICING

Your vehicle is equipped with an automatic oil change indicator system. The oil change indicator system will remind you that it is time to take your vehicle in for scheduled maintenance.

Based on engine operation conditions, the oil change indicator message will illuminate. This means that service is required for your vehicle. Operating conditions such as frequent short-trips, trailer tow, extremely hot or cold ambient temperatures, and E85 fuel usage will influence when the "Change Oil" or "Oil Change Required" message is displayed. Severe Operating Conditions can cause the change oil message to illuminate as early as 3,500 miles (5,600 km) since last reset. Have your vehicle serviced as soon as possible, within the next 500 miles (805 km).

Your authorized dealer will reset the oil change indicator message after completing the scheduled oil change. If a scheduled oil change is performed by someone other than your authorized dealer, the message can be reset by referring to the steps described under "Instrument Cluster Display" in "Getting To Know Your Instrument Panel" for further information.

NOTE: Under no circumstances should oil change intervals exceed 10,000 miles (16,000 km), twelve months or 350 hours of engine run time, whichever comes first. The 350 hours of engine run or idle time is generally only a concern for fleet customers.

Severe Duty All Models

Change Engine Oil at 4,000 miles (6,500 km) if the vehicle is operated in a dusty and off road environment or is operated predominantly at idle or only very low engine RPM's. This type of vehicle use is considered Severe Duty.

Once A Month Or Before A Long Trip:

Check engine oil level.

Check windshield washer fluid level.

Check the tire inflation pressures and look for unusual wear or damage.

Check the fluid levels of the coolant reservoir and brake master cylinder, and fill as needed.

Check function of all interior and exterior lights.

DEP DEALER ePROCESS

Maintenance Plan

Required Maintenance Intervals

Refer to the maintenance schedules on the following page for the required maintenance intervals.

At Every Oil Change Interval As Indicated By Oil Change Indicator System:
Change oil and filter.
Rotate the tires. **Rotate at the first sign of irregular wear, even if it occurs before the oil indicator system turns on.**

At Every Oil Change Interval As Indicated By Oil Change Indicator System:
Inspect battery and clean and tighten terminals as required.
Inspect brake pads, rotors, drums and park brake.
Inspect engine cooling system protection and hoses.
Inspect exhaust system.
Inspect engine air cleaner if using in dusty or off-road conditions.

Refer to the Maintenance Schedules on the following pages for the required maintenance intervals.

Mileage or time passed (whichever comes first)	20,000	30,000	40,000	50,000	60,000	70,000	80,000	90,000	100,000	110,000	120,000	130,000	140,000	150,000
Or Years:	2	3	4	5	6	7	8	9	10	11	12	13	14	15
Or Kilometers:	32,000	48,000	64,000	80,000	96,000	112,000	128,000	144,000	160,000	176,000	192,000	208,000	224,000	240,000
Additional Inspections														
Inspect the CV joints.		X			X			X			X			X
Inspect front suspension, tie rod ends and boot seals, and replace if necessary.	X		X		X		X		X		X		X	

DEP DEALER ePROCESS

Mileage or time passed (whichever comes first)	20,000	30,000	40,000	50,000	60,000	70,000	80,000	90,000	100,000	110,000	120,000	130,000	140,000	150,000
Or Years:	2	3	4	5	6	7	8	9	10	11	12	13	14	15
Or Kilometers:	32,000	48,000	64,000	80,000	96,000	112,000	128,000	144,000	160,000	176,000	192,000	208,000	224,000	240,000
Inspect the brake linings. Replace as necessary.	X		X		X		X		X		X		X	
Inspect park brake function. Adjust as necessary.	X		X		X		X		X		X		X	
Additional Maintenance														
Replace engine air filter.		X			X			X			X			X
Replace cabin air filter.	X		X		X		X		X		X		X	
Clean and lube sun roof tracks.	X	X	X	X	X	X	X	X	X	X	X	X	X	X
Replace spark plugs. **									X					
Flush and replace the engine coolant at 10 years or 150,000 miles (240,000 km) whichever comes first.									X					X
Inspect and replace PCV valve if necessary.									X					
Replaced accessory drive belt and tensioner.									X					
Replace the timing belt.														X

** The spark plug change interval is mileage based only, yearly intervals do not apply.

DEP DEALER ePROCESS

WARNING!

- **You can be badly injured working on or around a motor vehicle. Do only service work for which you have the knowledge and the right equipment. If you have any doubt about your ability to perform a service job, take your vehicle to a competent mechanic.**
- **Failure to properly inspect and maintain your vehicle could result in a component malfunction and effect vehicle handling and performance. This could cause an accident.**

DEP
DEALER ePROCESS

ENGINE COMPARTMENT — 1.4L LA

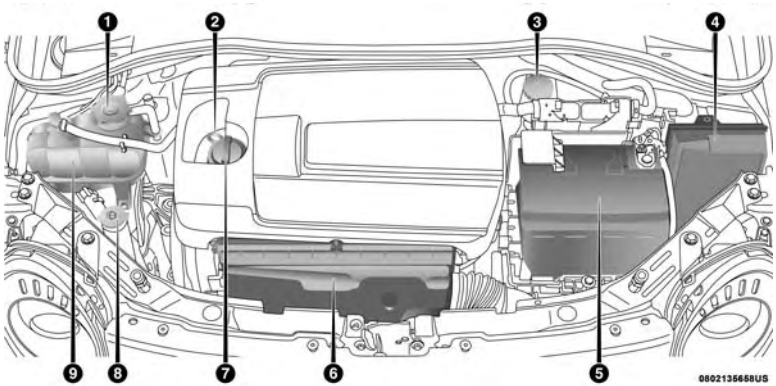

1 — Engine Coolant Reservoir Pressure Cap
2 — Engine Oil Dipstick
3 — Brake Fluid Reservoir
4 — Power Distribution Center (Fuses)
5 — Battery
6 — Air Cleaner Filter
7 — Engine Oil Fill
8 — Washer Fluid Reservoir
9 — Engine Coolant Reservoir

DEP
DEALER ePROCESS

Checking Oil Level

To assure proper engine lubrication, the engine oil must be maintained at the correct level. Check the oil level at regular intervals, such as every fuel stop. The best time to check the engine oil level is about five minutes after a fully warmed up engine is shut off.

Checking the oil while the vehicle is on level ground will improve the accuracy of the oil level readings.

There are three possible dipstick types,

- Crosshatched zone.
- Crosshatched zone marked SAFE.
- Crosshatched zone marked with MIN at the low end of the range and MAX at the high end of the range.
- Crosshatched zone marked with dimples at the MIN and the MAX ends of the range.

NOTE: Always maintain the oil level within the crosshatch markings on the dipstick.

Adding 1 quart (1.0 liters) of oil when the reading is at the low end of the dipstick range will raise the oil level to the high end of the range marking.

CAUTION!

Overfilling or underfilling the crankcase will cause aeration or loss of oil pressure. This could damage your engine.

Adding Washer Fluid

The windshield washer fluid reservoir is located in the engine compartment, and the fluid level should be checked at regular intervals. Fill the reservoir with windshield washer solvent (not engine coolant/ antifreeze). Refer to “Engine Compartment” in this section for further information.

WARNING!

Commercially available windshield washer solvents are flammable. They could ignite and burn you. Care must be exercised when filling or working around the washer solution.

DEP DEALER ePROCESS

Maintenance-Free Battery

Your vehicle is equipped with a maintenance-free battery. You will never have to add water, nor is periodic maintenance required.

WARNING!

- **Battery fluid is a corrosive acid solution and can burn or even blind you. Do not allow battery fluid to contact your eyes, skin, or clothing. Do not lean over a battery when attaching clamps. If acid splashes in eyes or on skin, flush the area immediately with large amounts of water. Refer to "Jump Starting Procedure" in "In Case Of Emergency" for further information.**
- **Battery gas is flammable and explosive. Keep flame or sparks away from the battery. Do not use a booster battery or any other booster source with an output greater than 12 Volts. Do not allow cable clamps to touch each other.**

(Continued)

WARNING! *(Continued)*

- **Battery posts, terminals, and related accessories contain lead and lead compounds. Wash hands after handling.**
- **The battery in this vehicle has a vent hose that should not be disconnected and should only be replaced with a battery of the same type (vented).**

CAUTION!

- **It is essential when replacing the cables on the battery that the positive cable is attached to the positive post and the negative cable is attached to the negative post. Battery posts are marked positive (+) and negative (-) and are identified on the battery case. Cable clamps should be tight on the terminal posts and free of corrosion.**
- **If a "fast charger" is used while the battery is in the vehicle, disconnect both vehicle battery cables before connecting the charger to the battery. Do not use a "fast charger" to provide starting voltage.**

DEP DEALER ePROCESS

DEALER SERVICE

An authorized dealer has the qualified service personnel, special tools, and equipment to perform all service operations in an expert manner. Service Manuals are available which include detailed service information for your vehicle. Refer to these Service Manuals before attempting any procedure yourself.

NOTE: Intentional tampering with emissions control systems may void your warranty and could result in civil penalties being assessed against you.

WARNING!

You can be badly injured working on or around a motor vehicle. Only do service work for which you have the knowledge and the proper equipment. If you have any doubt about your ability to perform a service job, take your vehicle to a competent mechanic.

Engine Oil

Change Engine Oil

The oil change indicator system will remind you that it is time to take your vehicle in for scheduled maintenance. Refer to the "Maintenance Plan" for further information.

NOTE: Under no circumstances should oil change intervals exceed 10,000 miles (16,000 km), twelve months or 350 hours of engine run time, whichever comes first. The 350 hours of engine run or idle time is generally only a concern for fleet customers.

Engine Oil Selection — 1.4L LA Engine

For best performance and maximum protection under all types of operating conditions, the manufacturer only recommends engine oils that are API Certified and meet the requirements of FCA Material Standard FPW9.55535-G1.

American Petroleum Institute (API) Engine Oil Identification Symbol

This symbol means that the oil has been certified by the American Petroleum Institute (API). The manufacturer only recommends API Certified engine oils.

This symbol certifies 0W-20, 5W-20, 0W-30, 5W-30 and 10W-30 engine oils.

DEP
DEALER ePROCESS

CAUTION!

Do not use chemical flushes in your engine oil as the chemicals can damage your engine. Such damage is not covered by the New Vehicle Limited Warranty.

Engine Oil Viscosity (SAE Grade) — 1.4L LA Engine

SAE 5W-30 engine oil approved to FCA Material Standard FPW9.55535-G1 such as Pennzoil, Shell Helix or equivalent is recommended for all operating temperatures. This engine oil improves low temperature starting and vehicle fuel economy.

The engine oil filler cap also shows the recommended engine oil viscosity for your engine. For information on engine oil filler cap location, refer to "Engine Compartment" in this section.

Lubricants which do not have both the engine oil certification mark and the correct SAE viscosity grade number should not be used.

Synthetic Engine Oils

You may use synthetic engine oils provided the recommended oil quality requirements are met, and the recommended maintenance intervals for oil and filter changes are followed.

Synthetic engine oils which do not have both the engine oil certification mark and the correct SAE viscosity grade number should not be used.

Materials Added To Engine Oil

The manufacturer strongly recommends against the addition of any additives (other than leak detection dyes) to the engine oil. Engine oil is an engineered product and its performance may be impaired by supplemental additives.

Disposing Of Used Engine Oil And Oil Filters

Care should be taken in disposing of used engine oil and oil filters from your vehicle. Used oil and oil filters, indiscriminately discarded, can present a problem to the environment. Contact an authorized dealer, service station or governmental agency for advice on how and where used oil and oil filters can be safely discarded in your area.

DEP DEALER ePROCESS

Engine Oil Filter

The engine oil filter should be replaced with a new filter at every engine oil change.

Engine Oil Filter Selection

This manufacturer's engines have a full-flow type disposable oil filter. Use a filter of this type for replacement. The quality of replacement filters varies considerably. Only high quality filters should be used to assure most efficient service. Mopar engine oil filters are high quality oil filters and are recommended.

Engine Air Cleaner Filter

Refer to the "Maintenance Plan" in this section for the proper maintenance intervals.

NOTE: Be sure to follow the "Severe Duty Conditions" maintenance interval if applicable.

WARNING!

The air induction system (air cleaner, hoses, etc.) can provide a measure of protection in the case of engine

(Continued)

WARNING! *(Continued)*

backfire. Do not remove the air induction system (air cleaner, hoses, etc.) unless such removal is necessary for repair or maintenance. Make sure that no one is near the engine compartment before starting the vehicle with the air induction system (air cleaner, hoses, etc.) removed. Failure to do so can result in serious personal injury.

Engine Air Cleaner Filter Selection

The quality of replacement engine air cleaner filters varies considerably. Only high quality filters should be used to assure most efficient service. Mopar engine air cleaner filters are a high quality filter and are recommended.

Air Conditioner Maintenance

For best possible performance, your air conditioner should be checked and serviced by an authorized dealer at the start of each warm season. This service should include cleaning of the condenser fins and a performance test. Drive belt tension should also be checked at this time.

DEP DEALER ePROCESS

WARNING!

- **Use only refrigerants and compressor lubricants approved by the manufacturer for your air conditioning system. Some unapproved refrigerants are flammable and can explode, injuring you. Other unapproved refrigerants or lubricants can cause the system to fail, requiring costly repairs. Refer to Warranty Information Book, located in your owner's information kit, for further warranty information.**
- **The air conditioning system contains refrigerant under high pressure. To avoid risk of personal injury or damage to the system, adding refrigerant or any repair requiring lines to be disconnected should be done by an experienced technician.**

CAUTION!

Do not use chemical flushes in your air conditioning system as the chemicals can damage your air conditioning components. Such damage is not covered by the New Vehicle Limited Warranty.

Refrigerant Recovery And Recycling R134a — If Equipped

R-134a Air Conditioning Refrigerant is a hydrofluorocarbon (HFC) that is an ozone-saving product. However, the manufacturer recommends that air conditioning service be performed by authorized dealer or other service facilities using recovery and recycling equipment.

NOTE: Use only manufacturer approved A/C system PAG compressor oil and refrigerants.

Refrigerant Recovery And Recycling — R–1234yf

R–1234yf Air Conditioning Refrigerant is a hydrofluoroolefin (HFO) that is endorsed by the Environmental Protection Agency and is an ozone-friendly substance with a low global-warming potential. The manufacturer recommends that air conditioning service be performed by an authorized dealer using recovery and recycling equipment.

NOTE: Use only manufacturer approved A/C system PAG compressor oil, and refrigerants.

DEP DEALER ePROCESS

A/C Air Filter

WARNING!

Do not remove the cabin air filter while the vehicle is running, or while the ignition is in the ACC or ON/RUN mode. With the cabin air filter removed and the blower operating, the blower can contact hands and may propel dirt and debris into your eyes, resulting in personal injury.

The A/C air filter is located in the fresh air inlet on the lower right of center console. Perform the following procedure to replace the filter:

1. Remove the Torx screw that secures the passenger side console closeout cover.

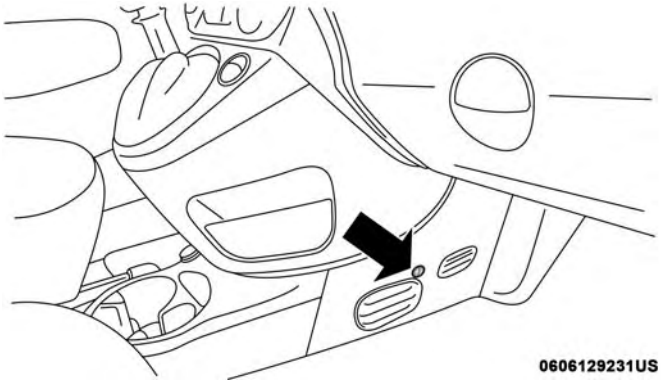

Torx Screw Location

DEP
DEALER ePROCESS

2. Pull the console closeout cover rearward to disengage the front retaining tab and remove the cover.

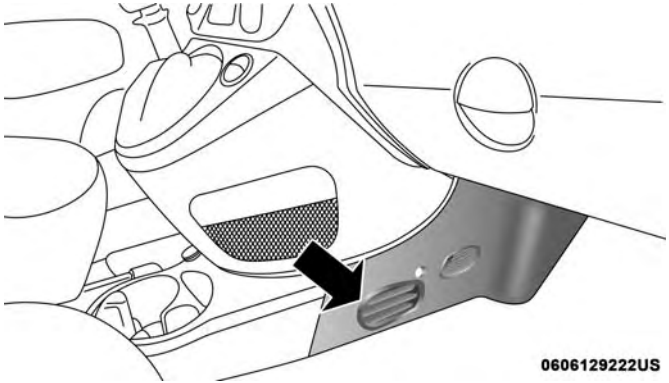

Console Closeout Panel

3. Remove the two 5.5 mm screws (1 and 2) that secure the particulate air filter cover to the HVAC housing.

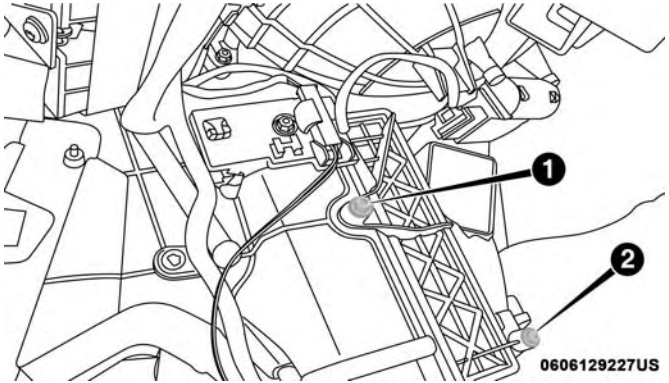

Air Filter Cover Screw Locations

DEP
DEALER ePROCESS

4. Remove the A/C air filter by pulling it straight out of the housing. Take note of the air filter position indicators.

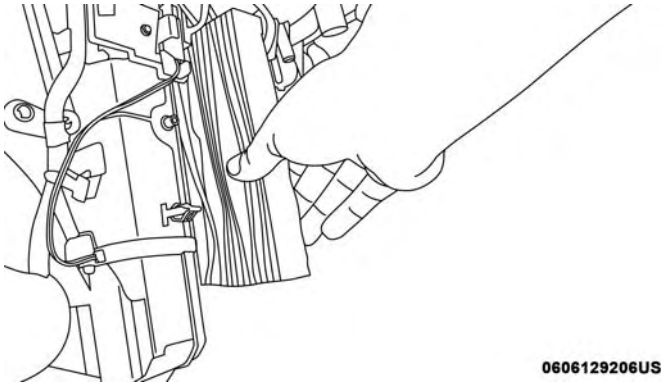

A/C Air Filter

5. Install the A/C air filter with the air filter position indicators pointing in the same direction as removal.

CAUTION!

The cabin air filter is identified with an arrow to indicate airflow direction through the filter. Failure to properly install the filter will result in the need to replace it more often.

6. Install the passenger side console closeout.

Refer to the "Maintenance Plan" for the proper maintenance intervals.

Body Lubrication

Locks and all body pivot points, including such items as seat tracks, door hinge pivot points and rollers, liftgate, tailgate, decklid, sliding doors and hood hinges, should be lubricated periodically with a lithium based grease, such as Mopar Spray White Lube to assure quiet, easy operation and to protect against rust and wear. Prior to the application of any lubricant, the parts concerned should be wiped clean to remove dust and grit; after lubricating excess oil and grease should be removed. Particular attention should also be given to hood latching components to ensure proper function. When performing other underhood services, the hood latch, release mechanism and safety catch should be cleaned and lubricated.

The external lock cylinders should be lubricated twice a year, preferably in the Fall and Spring. Apply a small amount of a high quality lubricant, such as Mopar Lock Cylinder Lubricant directly into the lock cylinder.

DEP
DEALER ePROCESS

Windshield Wiper Blades

Clean the rubber edges of the wiper blades and the windshield periodically with a sponge or soft cloth and a mild nonabrasive cleaner. This will remove accumulations of salt or road film.

Operation of the wipers on dry glass for long periods may cause deterioration of the wiper blades. Always use washer fluid when using the wipers to remove salt or dirt from a dry windshield.

Avoid using the wiper blades to remove frost or ice from the windshield. Keep the blade rubber out of contact with petroleum products such as engine oil, gasoline, etc.

NOTE: Life expectancy of wiper blades varies depending on geographical area and frequency of use. Poor performance of blades may be present with chattering, marks, water lines or wet spots. If any of these conditions are present, clean the wiper blades or replace as necessary.

The wiper blades and wiper arms should be inspected periodically, not just when wiper performance problems are experienced. This inspection should include the following points:

- Wear or uneven edges
- Foreign material
- Hardening or cracking
- Deformation or fatigue

If a wiper blade or wiper arm is damaged, replace the affected wiper arm or blade with a new unit. Do not attempt to repair a wiper arm or blade that is damaged.

DEP DEALER ePROCESS

Rear Wiper Blade Removal/Installation

1. Lift the pivot cap on the rear wiper arm upward, this will allow the rear wiper blade to be raised off of the liftgate glass.

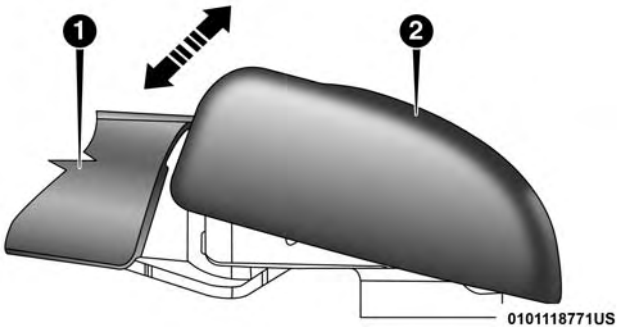

Lifting The Pivot Cap

1 — Wiper Arm
2 — Pivot Cap

NOTE: The rear wiper arm cannot be raised fully upward unless the pivot cap is raised first.

2. Lift the rear wiper arm upward to raise the wiper blade off of the liftgate glass.

3. Grab the bottom of the wiper blade and rotate it forward to unsnap the blade pivot pin from the wiper blade holder.

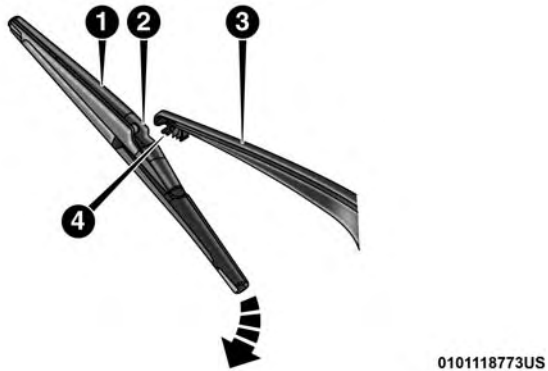

Removing The Wiper Blade

1 — Wiper Blade
2 — Blade Pivot Pin
3 — Wiper Arm
4 — Wiper Blade Holder

4. Install the wiper blade pivot pin into the wiper blade holder at the end of the wiper arm, and firmly press the wiper blade until it snaps into place.

5. Lower the wiper blade and snap the pivot cap into place.

DEP DEALER ePROCESS

Exhaust System

The best protection against carbon monoxide entry into the vehicle body is a properly maintained engine exhaust system.

If you notice a change in the sound of the exhaust system; or if the exhaust fumes can be detected inside the vehicle; or when the underside or rear of the vehicle is damaged; have an authorized technician inspect the complete exhaust system and adjacent body areas for broken, damaged, deteriorated, or mispositioned parts. Open seams or loose connections could permit exhaust fumes to seep into the passenger compartment. In addition, have the exhaust system inspected each time the vehicle is raised for lubrication or oil change. Replace as required.

WARNING!

- **Exhaust gases can injure or kill. They contain carbon monoxide (CO), which is colorless and odorless. Breathing it can make you unconscious and can eventually poison you. To avoid breathing CO, refer to "Safety Tips" in "Safety" for further information.**

(Continued)

WARNING! *(Continued)*

- **A hot exhaust system can start a fire if you park over materials that can burn. Such materials might be grass or leaves coming into contact with your exhaust system. Do not park or operate your vehicle in areas where your exhaust system can contact anything that can burn.**

CAUTION!

- **The catalytic converter requires the use of unleaded fuel only. Leaded gasoline will destroy the effectiveness of the catalyst as an emissions control device and may seriously reduce engine performance and cause serious damage to the engine.**
- **Damage to the catalytic converter can result if your vehicle is not kept in proper operating condition. In the event of engine malfunction, particularly involving engine misfire or other apparent loss of performance, have your vehicle serviced promptly. Continued operation of your vehicle with a severe malfunction could cause the converter to overheat, resulting in possible damage to the converter and vehicle.**

DEP DEALER ePROCESS

Under normal operating conditions, the catalytic converter will not require maintenance. However, it is important to keep the engine properly tuned to assure proper catalyst operation and prevent possible catalyst damage.

NOTE: Intentional tampering with emissions control systems can result in civil penalties being assessed against you.

In unusual situations involving grossly malfunctioning engine operation, a scorching odor may suggest severe and abnormal catalyst overheating. If this occurs, stop the vehicle, turn off the engine and allow it to cool. Service, including a tune-up to manufacturer's specifications, should be obtained immediately.

To minimize the possibility of catalytic converter damage:

- Do not interrupt the ignition when the transmission is in gear and the vehicle is in motion.
- Do not try to start the vehicle by pushing or towing the vehicle.
- Do not idle the engine with any ignition components disconnected or removed, such as when diagnostic testing, or for prolonged periods during very rough idle or malfunctioning operating conditions.

Cooling System

WARNING!

- **You or others can be badly burned by hot engine coolant (antifreeze) or steam from your radiator. If you see or hear steam coming from under the hood, do not open the hood until the radiator has had time to cool. Never open a cooling system pressure cap when the radiator or coolant bottle is hot.**
- **Keep hands, tools, clothing, and jewelry away from the radiator cooling fan when the hood is raised. The fan starts automatically and may start at any time, whether the engine is running or not.**
- **When working near the radiator cooling fan, disconnect the fan motor lead or turn the ignition to the OFF mode. The fan is temperature controlled and can start at any time the ignition is in the ON mode.**

Coolant Checks

Check engine coolant (antifreeze) protection every 12 months (before the onset of freezing weather, where applicable). If the engine coolant (antifreeze) is dirty or rusty in appearance, the system should be drained, flushed and

DEP DEALER ePROCESS

refilled with fresh engine coolant (antifreeze). Check the front of the A/C condenser for any accumulation of bugs, leaves, etc. If dirty, clean by gently spraying water from a garden hose vertically down the face of the condenser.

Cooling System — Drain, Flush And Refill

NOTE: Some vehicles require special tools to add coolant properly. Failure to fill these systems properly could lead to severe internal engine damage. If any coolant is needed to be added to the system please contact an authorized dealer.

If the engine coolant (antifreeze) is dirty or contains visible sediment, have an authorized dealer clean and flush with OAT coolant (antifreeze) (conforming to MS.90032).

Refer to the "Maintenance Plan" in this section for the proper maintenance intervals.

Selection Of Coolant

Refer to "Fluids And Lubricants" in "Technical Specifications" for further information.

NOTE:

- Mixing of engine coolant (antifreeze) other than specified Organic Additive Technology (OAT) engine coolant (antifreeze), may result in engine damage and may decrease corrosion protection. Organic Additive Technology (OAT) engine coolant is different and should not be mixed with Hybrid Organic Additive Technology (HOAT) engine coolant (antifreeze) or any "globally compatible" coolant (antifreeze). If a non-OAT engine coolant (antifreeze) is introduced into the cooling system in an emergency, the cooling system will need to be drained, flushed, and refilled with fresh OAT coolant (conforming to MS.90032), by an authorized dealer as soon as possible.
- Do not use water alone or alcohol-based engine coolant (antifreeze) products. Do not use additional rust inhibitors or antirust products, as they may not be compatible with the radiator engine coolant and may plug the radiator.
- This vehicle has not been designed for use with propylene glycol-based engine coolant (antifreeze). Use of propylene glycolbased engine coolant (antifreeze) is not recommended.
- Some vehicles require special tools to add coolant properly. Failure to fill these systems properly could lead to severe internal engine damage. If any coolant is needed to be added to the system please contact an authorized dealer.

DEP DEALER ePROCESS

Adding Coolant

Your vehicle has been built with an improved engine coolant (OAT coolant conforming to MS.90032) that allows extended maintenance intervals. This engine coolant (antifreeze) can be used up to ten years or 150,000 miles (240,000 km) before replacement. To prevent reducing this extended maintenance period, it is important that you use the same engine coolant (OAT coolant conforming to MS.90032) throughout the life of your vehicle.

Please review these recommendations for using Organic Additive Technology (OAT) engine coolant (antifreeze) that meets the requirements of FCA Material Standard MS.90032. When adding engine coolant (antifreeze):

- We recommend using Mopar Antifreeze/Coolant 10 Year/150,000 Mile (240,000 km) Formula OAT (Organic Additive Technology) that meets the requirements of FCA Material Standard MS.90032.
- Mix a minimum solution of 50% OAT engine coolant that meets the requirements of FCA Material Standard MS.90032 and distilled water. Use higher concentrations (not to exceed 70%) if temperatures below –34°F (–37°C) are anticipated. Please contact an authorized dealer for assistance.
- Use only high purity water such as distilled or deionized water when mixing the water/engine coolant (antifreeze) solution. The use of lower quality water will reduce the amount of corrosion protection in the engine cooling system.

NOTE:

- It is the owner's responsibility to maintain the proper level of protection against freezing according to the temperatures occurring in the area where the vehicle is operated.
- Some vehicles require special tools to add coolant properly. Failure to fill these systems properly could lead to severe internal engine damage. If any coolant is needed to be added to the system, please contact a local authorized dealer.
- Mixing engine coolant (antifreeze) types is not recommended and can result in cooling system damage. If HOAT and OAT coolant are mixed in an emergency, have a authorized dealer drain, flush, and refill with OAT coolant (conforming to MS.90032) as soon as possible.

DEP
DEALER ePROCESS

Cooling System Pressure Cap

The cap must be fully tightened to prevent loss of engine coolant (antifreeze), and to ensure that engine coolant (antifreeze) will return to the radiator from the coolant expansion bottle/recovery tank if so equipped.

The cap should be inspected and cleaned if there is any accumulation of foreign material on the sealing surfaces.

WARNING!

- **Do not open hot engine cooling system. Never add engine coolant (antifreeze) when the engine is overheated. Do not loosen or remove the cap to cool an overheated engine. Heat causes pressure to build up in the cooling system. To prevent scalding or injury, do not remove the pressure cap while the system is hot or under pressure.**
- **Do not use a pressure cap other than the one specified for your vehicle. Personal injury or engine damage may result.**

Disposal Of Used Coolant

Used ethylene glycol-based coolant (antifreeze) is a regulated substance requiring proper disposal. Check with your local authorities to determine the disposal rules for your community. To prevent ingestion by animals or children, do not store ethylene glycol-based coolant in open containers or allow it to remain in puddles on the ground. If ingested by a child or pet, seek emergency assistance immediately. Clean up any ground spills immediately.

Coolant Level

The coolant expansion bottle provides a quick visual method for determining that the coolant level is adequate. With the engine off and cold, the level of the coolant (antifreeze) in the bottle should be between the “MAX” and “MIN” lines marked on the bottle.

As long as the engine operating temperature is satisfactory, the coolant bottle need only be checked once a month.

When additional coolant (antifreeze) is needed to maintain the proper level, it should be added to the coolant bottle. Do not overfill.

See an authorized dealer for service.

DEP DEALER ePROCESS

Points To Remember

NOTE: When the vehicle is stopped after a few miles/kilometers of operation, you may observe vapor coming from the front of the engine compartment. This is normally a result of moisture from rain, snow, or high humidity accumulating on the radiator and being vaporized when the thermostat opens, allowing hot engine coolant (antifreeze) to enter the radiator.

If an examination of your engine compartment shows no evidence of radiator or hose leaks, the vehicle may be safely driven. The vapor will soon dissipate.

- Do not overfill the coolant expansion bottle.
- Check the coolant freeze point in the radiator and in the coolant expansion bottle. If engine coolant (antifreeze) needs to be added, the contents of the coolant expansion bottle must also be protected against freezing.
- If frequent engine coolant (antifreeze) additions are required, the cooling system should be pressure tested for leaks.
- Maintain engine coolant (antifreeze) concentration at a minimum of 50% OAT coolant (conforming to MS.90032) and distilled water for proper corrosion protection of your engine which contains aluminum components.
- Keep the front of the radiator clean. If your vehicle is equipped with air conditioning, keep the front of the condenser clean.
- Do not change the thermostat for Summer or Winter operation. If replacement is ever necessary, install ONLY the correct type thermostat. Other designs may result in unsatisfactory engine coolant (antifreeze) performance, poor gas mileage, and increased emissions.

Brake System

In order to assure brake system performance, all brake system components should be inspected periodically. Refer to the "Maintenance Plan" in this section for the proper maintenance intervals.

WARNING!

Riding the brakes can lead to brake failure and possibly a collision. Driving with your foot resting or riding on the brake pedal can result in abnormally high brake temperatures, excessive lining wear, and possible brake damage. You would not have your full braking capacity in an emergency.

DEP DEALER ePROCESS

Brake Master Cylinder

The fluid in the master cylinder should be checked when performing under hood services or immediately if the "Brake Warning Light" is illuminated.

Be sure to clean the top of the master cylinder area before removing the cap. If necessary, add fluid to bring the fluid level up to the requirements described on the brake fluid reservoir. With disc brakes, fluid level can be expected to fall as the brake pads wear. Brake fluid level should be checked when pads are replaced. However, low fluid level may be caused by a leak and a checkup may be needed.

Use only manufacturer's recommended brake fluid. Refer to "Fluids And Lubricants" in "Technical Specifications" for further information.

WARNING!

- **Use only manufacturer's recommended brake fluid. Refer to "Fluids And Lubricants" in "Technical Specifications" for further information. Using the wrong type of brake fluid can severely damage your brake system and/or impair its performance. The**

(Continued)

WARNING! *(Continued)*

proper type of brake fluid for your vehicle is also identified on the original factory installed hydraulic master cylinder reservoir.

- **To avoid contamination from foreign matter or moisture, use only new brake fluid or fluid that has been in a tightly closed container. Keep the master cylinder reservoir cap secured at all times. Brake fluid in a open container absorbs moisture from the air resulting in a lower boiling point. This may cause it to boil unexpectedly during hard or prolonged braking, resulting in sudden brake failure. This could result in a collision.**
- **Overfilling the brake fluid reservoir can result in spilling brake fluid on hot engine parts, causing the brake fluid to catch fire. Brake fluid can also damage painted and vinyl surfaces, care should be taken to avoid its contact with these surfaces.**
- **Do not allow petroleum based fluid to contaminate the brake fluid. Brake seal components could be damaged, causing partial or complete brake failure. This could result in a collision.**

DEP DEALER ePROCESS

Manual Transmission — If Equipped

Lubricant Selection

Use only the manufacturers recommended transmission fluid. Refer to "Fluids And Lubricants" in "Technical Specifications" for further information.

Please see an authorized dealer for service.

Fluid Level Check

Check the fluid level by removing the fill plug. The fluid level should be between the bottom of the fill hole and a point not more than 3/16 inch (4.7 mm) below the bottom of the hole.

Add fluid, if necessary, to maintain the proper level.

Please see an authorized dealer for service.

Frequency Of Fluid Change

Under normal operating conditions, the fluid installed at the factory will give satisfactory lubrication for the life of the vehicle. Fluid changes are not necessary unless lubricant has become contaminated with water.

NOTE: If contaminated with water, the fluid should be changed immediately.

Automatic Transmission — If Equipped

Selection Of Lubricant

It is important to use the proper transmission fluid to ensure optimum transmission performance and life. Use only the manufacturer's specified transmission fluid. Refer to "Fluids And Lubricants" in "Technical Specifications" for fluid specifications. It is important to maintain the transmission fluid at the correct level using the recommended fluid.

NOTE: No chemical flushes should be used in any transmission; only the approved lubricant should be used.

CAUTION!

Using a transmission fluid other than the manufacturer's recommended fluid may cause deterioration in transmission shift quality and/or torque converter shudder. Refer to "Fluids And Lubricants" in "Technical Specifications" for fluid specifications.

Special Additives

The manufacturer strongly recommends against using any special additives in the transmission.

DEP DEALER ePROCESS

Automatic Transmission Fluid (ATF) is an engineered product and its performance may be impaired by supplemental additives. Therefore, do not add any fluid additives to the transmission. The only exception to this policy is the use of special dyes for diagnosing fluid leaks. Avoid using transmission sealers as they may adversely affect seals.

CAUTION!

Do not use chemical flushes in your transmission as the chemicals can damage your transmission components. Such damage is not covered by the New Vehicle Limited Warranty.

Fluid Level Check

The fluid level is preset at the factory and does not require adjustment under normal operating conditions. Routine fluid level checks are not required; therefore the transmission has no dipstick. An authorized dealer can check your transmission fluid level using special service tools. If you notice fluid leakage or transmission malfunction, visit an authorized dealer immediately to have the transmission fluid level checked. Operating the vehicle with an improper fluid level can cause severe transmission damage.

CAUTION!

If a transmission fluid leak occurs, visit an authorized dealer immediately. Severe transmission damage may occur. An authorized dealer has the proper tools to adjust the fluid level accurately.

Fluid And Filter Changes

Under normal operating conditions, the fluid installed at the factory will provide satisfactory lubrication for the life of the vehicle.

Routine fluid and filter changes are not required. However, change the fluid and filter if the fluid becomes contaminated (with water, etc.), or if the transmission is disassembled for any reason.

RAISING THE VEHICLE

In the case where it is necessary to raise the vehicle, go to an authorized dealer or service station.

DEP DEALER ePROCESS

TIRES

Tire Safety Information

Tire safety information will cover aspects of the following information: Tire Markings, Tire Identification Numbers, Tire Terminology and Definitions, Tire Pressures, and Tire Loading.

Tire Markings

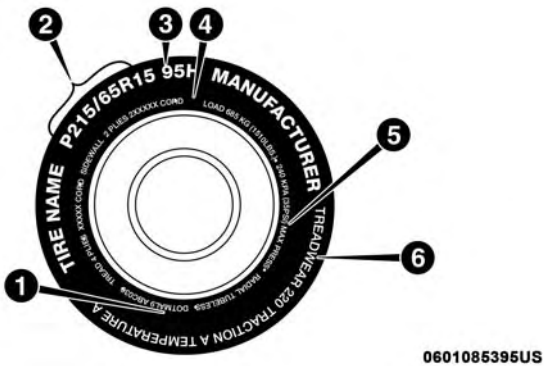

Tire Markings

1 — U.S. DOT Safety Standards Code (TIN)
2 — Size Designation
3 — Service Description
4 — Maximum Load
5 — Maximum Pressure
6 — Treadwear, Traction and Temperature Grades

NOTE:

- P (Passenger) — Metric tire sizing is based on U.S. design standards. P-Metric tires have the letter "P" molded into the sidewall preceding the size designation. Example: P215/65R15 95H.
- European — Metric tire sizing is based on European design standards. Tires designed to this standard have the tire size molded into the sidewall beginning with the section width. The letter "P" is absent from this tire size designation. Example: 215/65R15 96H.
- LT (Light Truck) — Metric tire sizing is based on U.S. design standards. The size designation for LT-Metric tires is the same as for P-Metric tires except for the letters "LT" that are molded into the sidewall preceding the size designation. Example: LT235/85R16.
- Temporary spare tires are designed for temporary emergency use only. Temporary high pressure compact spare tires have the letter "T" or "S" molded into the sidewall preceding the size designation. Example: T145/80D18 103M.
- High flotation tire sizing is based on U.S. design standards and it begins with the tire diameter molded into the sidewall. Example: 31x10.5 R15 LT.

DEP
DEALER ePROCESS

Tire Identification Number (TIN)

The TIN may be found on one or both sides of the tire; however, the date code may only be on one side. Tires with white sidewalls will have the full TIN, including the date code, located on the white sidewall side of the tire. Look for the TIN on the outboard side of black sidewall tires as mounted on the vehicle. If the TIN is not found on the outboard side, then you will find it on the inboard side of the tire.

EXAMPLE:
DOT MA L9 ABCD 0301
DOT = Department of Transportation – This symbol certifies that the tire is in compliance with the U.S. Department of Transportation tire safety standards and is approved for highway use
MA = Code representing the tire manufacturing location (two digits)
L9 = Code representing the tire size (two digits)
ABCD = Code used by the tire manufacturer (one to four digits)
03 = Number representing the week in which the tire was manufactured (two digits) – 03 means the 3rd week
01 = Number representing the year in which the tire was manufactured (two digits) – 01 means the year 2001 – Prior to July 2000, tire manufacturers were only required to have one number to represent the year in which the tire was manufactured. Example: 031 could represent the 3rd week of 1981 or 1991

DEP DEALER ePROCESS

Tire Terminology And Definitions

Term	Definition
B-Pillar	The vehicle B-Pillar is the structural member of the body located behind the front door.
Cold Tire Inflation Pressure	Cold tire inflation pressure is defined as the tire pressure after the vehicle has not been driven for at least three hours, or driven less than 1 mile (1.6 km) after sitting for a minimum of three hours. Inflation pressure is measured in units of PSI (pounds per square inch) or kPa (kilopascals).
Maximum Inflation Pressure	The maximum inflation pressure is the maximum permissible cold tire inflation pressure for this tire. The maximum inflation pressure is molded into the sidewall.
Recommended Cold Tire Inflation Pressure	Vehicle manufacturer's recommended cold tire inflation pressure as shown on the tire placard.
Tire Placard	A label permanently attached to the vehicle describing the vehicle's loading capacity, the original equipment tire sizes and the recommended cold tire inflation pressures.

DEP
DEALER ePROCESS

Tire Loading And Tire Pressure

NOTE: The proper cold tire inflation pressure is listed on the driver's side B-Pillar or the rear edge of the driver's side door.

Check the inflation pressure of each tire, including the spare tire (if equipped), at least monthly and inflate to the recommended pressure for your vehicle.

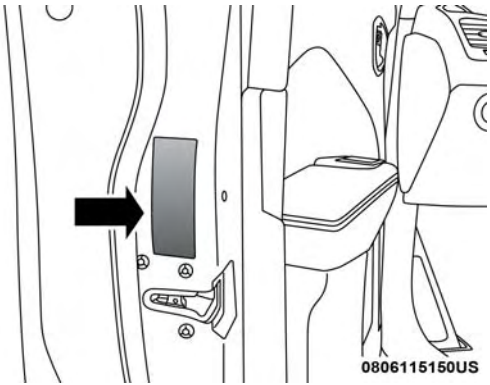

Example Tire Placard Location (Door)

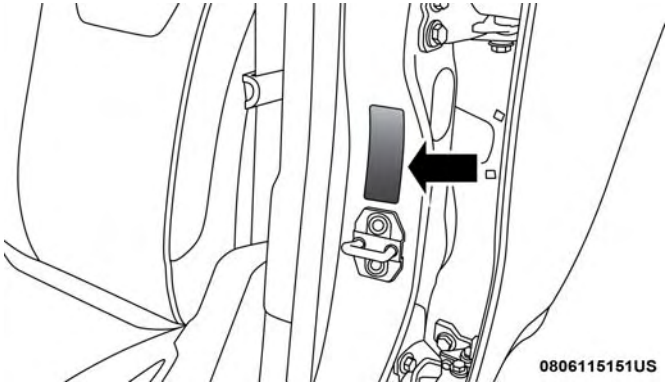

Example Tire Placard Location (B-Pillar)

DEP DEALER ePROCESS

Tire And Loading Information Placard

Tire And Loading Information Placard

This placard tells you important information about the:

1. Number of people that can be carried in the vehicle.
2. Total weight your vehicle can carry.
3. Tire size designed for your vehicle.
4. Cold tire inflation pressures for the front, rear, and spare tires.

Loading

The vehicle maximum load on the tire must not exceed the load carrying capacity of the tire on your vehicle. You will not exceed the tire's load carrying capacity if you adhere to the loading conditions, tire size, and cold tire inflation pressures specified on the Tire and Loading Information placard in "Vehicle Loading" in the "Starting And Operating" section of this manual.

NOTE: Under a maximum loaded vehicle condition, gross axle weight ratings (GAWRs) for the front and rear axles must not be exceeded.

For further information on GAWRs, vehicle loading, and trailer towing, refer to "Vehicle Loading" in the "Starting And Operating" section of this manual.

To determine the maximum loading conditions of your vehicle, locate the statement "The combined weight of occupants and cargo should never exceed XXX kg or XXX lbs" on the Tire and Loading Information placard. The combined weight of occupants, cargo/luggage and trailer tongue weight (if applicable) should never exceed the weight referenced here.

DEP
DEALER ePROCESS

Steps For Determining Correct Load Limit—

(1) Locate the statement "The combined weight of occupants and cargo should never exceed XXX kg or XXX lbs." on your vehicle's placard.

(2) Determine the combined weight of the driver and passengers that will be riding in your vehicle.

(3) Subtract the combined weight of the driver and passengers from XXX kg or XXX lbs.

(4) The resulting figure equals the available amount of cargo and luggage load capacity. For example, if "XXX" amount equals 1400 lbs. and there will be five 150 lb passengers in your vehicle, the amount of available cargo and luggage load capacity is 650 lbs. (1400-750 (5x150) = 650 lbs.)

(5) Determine the combined weight of luggage and cargo being loaded on the vehicle. That weight may not safely exceed the available cargo and luggage load capacity calculated in Step 4.

(6) If your vehicle will be towing a trailer, load from your trailer will be transferred to your vehicle. Consult this manual to determine how this reduces the available cargo and luggage load capacity of your vehicle.

Metric Example For Load Limit

For example, if "XXX" amount equals 635 kg and there will be five 68 kg passengers in your vehicle, the amount of available cargo and luggage load capacity is 295 kg (635-340 (5x68) = 295 kg) as shown in step 4.

NOTE:

- If your vehicle will be towing a trailer, load from your trailer will be transferred to your vehicle. The following table shows examples on how to calculate total load, cargo/luggage, and towing capacities of your vehicle with varying seating configurations and number and size of occupants. This table is for illustration purposes only and may not be accurate for the seating and load carry capacity of your vehicle.
- For the following example, the combined weight of occupants and cargo should never exceed 865 lbs (392 kg).

DEP DEALER ePROCESS

Occupants			Combined weight of occupants and cargo from Tire Placard	MINUS	Combined Occupant's weight	=	AVAILABLE Cargo/Luggage and Trailer Tongue Weight
TOTAL	FRONT	REAR					
EXAMPLE 1							
5	2	3	865 lbs	minus	Occupant 1: 200 lbs Occupant 2: 130 lbs Occupant 3: 160 lbs Occupant 4: 100 lbs Occupant 5: 80 lbs TOTAL WEIGHT: 670 lbs	=	195 lbs
EXAMPLE 2							
3	2	1	865 lbs	minus	Occupant 1: 210 lbs Occupant 2: 180 lbs Occupant 3: 150 lbs TOTAL WEIGHT: 540 lbs	=	325 lbs
EXAMPLE 3							
2	2	0	865 lbs	minus	Occupant 1: 200 lbs Occupant 2: 200 lbs TOTAL WEIGHT: 400 lbs	=	465 lbs

EXAMPLE

811a4d11

WARNING!

Overloading of your tires is dangerous. Overloading can cause tire failure, affect vehicle handling, and increase your stopping distance. Use tires of the recommended load capacity for your vehicle. Never overload them.

DEP DEALER ePROCESS

Tires — General Information

Tire Pressure

Proper tire inflation pressure is essential to the safe and satisfactory operation of your vehicle. Four primary areas are affected by improper tire pressure:

- Safety and Vehicle Stability
- Economy
- Tread Wear
- Ride Comfort

Safety

WARNING!

- **Improperly inflated tires are dangerous and can cause collisions.**
- **Underinflation increases tire flexing and can result in overheating and tire failure.**
- **Overinflation reduces a tire's ability to cushion shock. Objects on the road and chuckholes can cause damage that result in tire failure.**

(Continued)

WARNING! ***(Continued)***

- **Overinflated or underinflated tires can affect vehicle handling and can fail suddenly, resulting in loss of vehicle control.**
- **Unequal tire pressures can cause steering problems. You could lose control of your vehicle.**
- **Unequal tire pressures from one side of the vehicle to the other can cause the vehicle to drift to the right or left.**
- **Always drive with each tire inflated to the recommended cold tire inflation pressure.**

Both under-inflation and over-inflation affect the stability of the vehicle and can produce a feeling of sluggish response or over responsiveness in the steering.

NOTE:

- Unequal tire pressures from side to side may cause erratic and unpredictable steering response.
- Unequal tire pressure from side to side may cause the vehicle to drift left or right.

DEP DEALER ePROCESS

Fuel Economy

Underinflated tires will increase tire rolling resistance resulting in higher fuel consumption.

Tread Wear

Improper cold tire inflation pressures can cause abnormal wear patterns and reduced tread life, resulting in the need for earlier tire replacement.

Ride Comfort And Vehicle Stability

Proper tire inflation contributes to a comfortable ride. Over-inflation produces a jarring and uncomfortable ride.

Tire Inflation Pressures

The proper cold tire inflation pressure is listed on the driver's side B-Pillar or rear edge of the driver's side door.

At least once a month:

- Check and adjust tire pressure with a good quality pocket-type pressure gauge. Do not make a visual judgement when determining proper inflation. Tires may look properly inflated even when they are under-inflated.
- Inspect tires for signs of tire wear or visible damage.

CAUTION!

After inspecting or adjusting the tire pressure, always reinstall the valve stem cap. This will prevent moisture and dirt from entering the valve stem, which could damage the valve stem.

Inflation pressures specified on the placard are always "cold tire inflation pressure". Cold tire inflation pressure is defined as the tire pressure after the vehicle has not been driven for at least three hours, or driven less than 1 mile (1.6 km) after sitting for a minimum of three hours. The cold tire inflation pressure must not exceed the maximum inflation pressure molded into the tire sidewall.

Check tire pressures more often if subject to a wide range of outdoor temperatures, as tire pressures vary with temperature changes.

Tire pressures change by approximately 1 psi (7 kPa) per 12°F (7°C) of air temperature change. Keep this in mind when checking tire pressure inside a garage, especially in the Winter.

DEP
DEALER ePROCESS

Example: If garage temperature = 68°F (20°C) and the outside temperature = 32°F (0°C) then the cold tire inflation pressure should be increased by 3 psi (21 kPa), which equals 1 psi (7 kPa) for every 12°F (7°C) for this outside temperature condition.

Tire pressure may increase from 2 to 6 psi (13 to 40 kPa) during operation. DO NOT reduce this normal pressure build up or your tire pressure will be too low.

Tire Pressures For High Speed Operation

The manufacturer advocates driving at safe speeds and within posted speed limits. Where speed limits or conditions are such that the vehicle can be driven at high speeds, maintaining correct tire inflation pressure is very important. Increased tire pressure and reduced vehicle loading may be required for high-speed vehicle operation. Refer to an authorized tire dealer or original equipment vehicle dealer for recommended safe operating speeds, loading and cold tire inflation pressures.

WARNING!

High speed driving with your vehicle under maximum load is dangerous. The added strain on your tires could

(Continued)

WARNING! *(Continued)*

cause them to fail. You could have a serious collision. Do not drive a vehicle loaded to the maximum capacity at continuous speeds above 75 mph (120 km/h).

Radial Ply Tires

WARNING!

Combining radial ply tires with other types of tires on your vehicle will cause your vehicle to handle poorly. The instability could cause a collision. Always use radial ply tires in sets of four. Never combine them with other types of tires.

Tire Repair

If your tire becomes damaged, it may be repaired if it meets the following criteria:

- The tire has not been driven on when flat.
- The damage is only on the tread section of your tire (sidewall damage is not repairable).
- The puncture is no greater than a ¼ of an inch (6 mm).

DEP DEALER ePROCESS

Consult an authorized tire dealer for tire repairs and additional information.

Damaged Run Flat tires, or Run Flat tires that have experienced a loss of pressure should be replaced immediately with another Run Flat tire of identical size and service description (Load Index and Speed Symbol).

Run Flat Tires — If Equipped

Run Flat tires allow you the capability to drive 50 miles (80 km) at 50 mph (80 km/h) after a rapid loss of inflation pressure. This rapid loss of inflation is referred to as the Run Flat mode. A Run Flat mode occurs when the tire inflation pressure is of/or below 14 psi (96 kPa). Once a Run Flat tire reaches the run flat mode it has limited driving capabilities and needs to be replaced immediately. A Run Flat tire is not repairable.

It is not recommended driving a vehicle loaded at full capacity or to tow a trailer while a tire is in the run flat mode.

See the tire pressure monitoring section for more information.

Tire Spinning

When stuck in mud, sand, snow, or ice conditions, do not spin your vehicle's wheels above 30 mph (48 km/h) or for longer than 30 seconds continuously without stopping.

Refer to "Freeing A Stuck Vehicle" in "In Case Of Emergency" for further information.

WARNING!

Fast spinning tires can be dangerous. Forces generated by excessive wheel speeds may cause tire damage or failure. A tire could explode and injure someone. Do not spin your vehicle's wheels faster than 30 mph (48 km/h) for more than 30 seconds continuously when you are stuck, and do not let anyone near a spinning wheel, no matter what the speed.

Tread Wear Indicators

Tread wear indicators are in the original equipment tires to help you in determining when your tires should be replaced.

DEP
DEALER ePROCESS

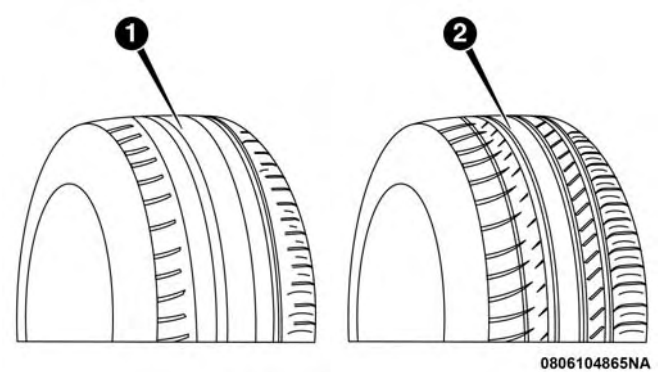

Tire Tread

1 — Worn Tire
2 — New Tire

These indicators are molded into the bottom of the tread grooves. They will appear as bands when the tread depth becomes a 1/16 of an inch (1.6 mm). When the tread is worn to the tread wear indicators, the tire should be replaced. Refer to "Replacement Tires" in this section for further information.

Life Of Tire

The service life of a tire is dependent upon varying factors including, but not limited to:

- Driving style.
- Tire pressure - Improper cold tire inflation pressures can cause uneven wear patterns to develop across the tire tread. These abnormal wear patterns will reduce tread life, resulting in the need for earlier tire replacement.
- Distance driven.
- Performance tires, tires with a speed rating of V or higher, and Summer tires typically have a reduced tread life. Rotation of these tires per the vehicle scheduled maintenance is highly recommended.

WARNING!

Tires and the spare tire should be replaced after six years, regardless of the remaining tread. Failure to follow this warning can result in sudden tire failure. You could lose control and have a collision resulting in serious injury or death.

DEP DEALER ePROCESS

NOTE: Wheel Valve Stem must be replaced as well when installing new tires due to wear and tear in existing tires.

Keep dismounted tires in a cool, dry place with as little exposure to light as possible. Protect tires from contact with oil, grease, and gasoline.

Replacement Tires

The tires on your new vehicle provide a balance of many characteristics. They should be inspected regularly for wear and correct cold tire inflation pressures. The manufacturer strongly recommends that you use tires equivalent to the originals in size, quality and performance when replacement is needed. Refer to the paragraph on "Tread Wear Indicators" in this section. Refer to the Tire and Loading Information placard or the Vehicle Certification Label for the size designation of your tire. The Load Index and Speed Symbol for your tire will be found on the original equipment tire sidewall.

See the Tire Sizing Chart example found in the "Tire Safety Information" section of this manual for more information relating to the Load Index and Speed Symbol of a tire.

It is recommended to replace the two front tires or two rear tires as a pair. Replacing just one tire can seriously affect your vehicle's handling. If you ever replace a wheel, make sure that the wheel's specifications match those of the original wheels.

It is recommended you contact an authorized tire dealer or original equipment dealer with any questions you may have on tire specifications or capability. Failure to use equivalent replacement tires may adversely affect the safety, handling, and ride of your vehicle.

WARNING!

- **Do not use a tire, wheel size, load rating, or speed rating other than that specified for your vehicle. Some combinations of unapproved tires and wheels may change suspension dimensions and performance characteristics, resulting in changes to steering, handling, and braking of your vehicle. This can cause unpredictable handling and stress to steering and suspension components. You could lose control and have a collision resulting in serious injury or death. Use only the tire and wheel sizes with load ratings approved for your vehicle.**

(Continued)

DEP DEALER ePROCESS

WARNING! *(Continued)*

- **Never use a tire with a smaller load index or capacity, other than what was originally equipped on your vehicle. Using a tire with a smaller load index could result in tire overloading and failure. You could lose control and have a collision.**
- **Failure to equip your vehicle with tires having adequate speed capability can result in sudden tire failure and loss of vehicle control.**

CAUTION!

Replacing original tires with tires of a different size may result in false speedometer and odometer readings.

Tire Types

All Season Tires — If Equipped

All Season tires provide traction for all seasons (Spring, Summer, Fall, and Winter). Traction levels may vary between different all season tires. All season tires can be identified by the M+S, M&S, M/S or MS designation on the tire sidewall. Use all season tires only in sets of four; failure to do so may adversely affect the safety and handling of your vehicle.

Summer Or Three Season Tires — If Equipped

Summer tires provide traction in both wet and dry conditions, and are not intended to be driven in snow or on ice. If your vehicle is equipped with Summer tires, be aware these tires are not designed for Winter or cold driving conditions. Install Winter tires on your vehicle when ambient temperatures are less than 40°F (5°C) or if roads are covered with ice or snow. For more information, contact an authorized dealer.

Summer tires do not contain the all season designation or mountain/snowflake symbol on the tire sidewall. Use Summer tires only in sets of four; failure to do so may adversely affect the safety and handling of your vehicle.

WARNING!

Do not use Summer tires in snow/ice conditions. You could lose vehicle control, resulting in severe injury or death. Driving too fast for conditions also creates the possibility of loss of vehicle control.

DEP DEALER ePROCESS

Snow Tires

Some areas of the country require the use of snow tires during the Winter. Snow tires can be identified by a "mountain/snowflake" symbol on the tire sidewall.

If you need snow tires, select tires equivalent in size and type to the original equipment tires. Use snow tires only in sets of four; failure to do so may adversely affect the safety and handling of your vehicle.

Snow tires generally have lower speed ratings than what was originally equipped with your vehicle and should not be operated at sustained speeds over 75 mph (120 km/h). For speeds above 75 mph (120 km/h) refer to original equipment or an authorized tire dealer for recommended safe operating speeds, loading and cold tire inflation pressures.

While studded tires improve performance on ice, skid and traction capability on wet or dry surfaces may be poorer than that of non-studded tires. Some states prohibit studded tires; therefore, local laws should be checked before using these tire types.

Spare Tires — If Equipped

NOTE: For vehicles equipped with Tire Service Kit instead of a spare tire, please refer to "Tire Service Kit" in "In Case Of Emergency" for further information.

CAUTION!

Because of the reduced ground clearance, do not take your vehicle through an automatic car wash with a compact or limited use temporary spare installed. Damage to the vehicle may result.

Spare Tire Matching Original Equipped Tire And Wheel — If Equipped

Your vehicle may be equipped with a spare tire and wheel equivalent in look and function to the original equipment tire and wheel found on the front or rear axle of your vehicle. This spare tire may be used in the tire rotation for your vehicle. If your vehicle has this option, refer to an authorized tire dealer for the recommended tire rotation pattern.

DEP DEALER ePROCESS

Compact Spare Tire — If Equipped

The compact spare is for temporary emergency use only. You can identify if your vehicle is equipped with a compact spare by looking at the spare tire description on the Tire and Loading Information Placard located on the driver's side door opening or on the sidewall of the tire. Compact spare tire descriptions begin with the letter "T" or "S" preceding the size designation. Example: T145/80D18 103M.

T, S = Temporary Spare Tire

Since this tire has limited tread life, the original equipment tire should be repaired (or replaced) and reinstalled on your vehicle at the first opportunity.

Do not install a wheel cover or attempt to mount a conventional tire on the compact spare wheel, since the wheel is designed specifically for the compact spare tire. Do not install more than one compact spare tire and wheel on the vehicle at any given time.

WARNING!

Compact and collapsible spares are for temporary emergency use only. With these spares, do not drive

(Continued)

WARNING! ***(Continued)***

more than 50 mph (80 km/h). Temporary use spares have limited tread life. When the tread is worn to the tread wear indicators, the temporary use spare tire needs to be replaced. Be sure to follow the warnings, which apply to your spare. Failure to do so could result in spare tire failure and loss of vehicle control.

Collapsible Spare Tire — If Equipped

The collapsible spare is for temporary emergency use only. You can identify if your vehicle is equipped with a collapsible spare by looking at the spare tire description on the Tire and Loading Information Placard located on the driver's side door opening or on the sidewall of the tire.

Collapsible spare tire description example: 165/80-17 101P.

Since this tire has limited tread life, the original equipment tire should be repaired (or replaced) and reinstalled on your vehicle at the first opportunity.

Inflate collapsible tire only after the wheel is properly installed to the vehicle. Inflate the collapsible tire using the electric air pump before lowering the vehicle.

DEP DEALER ePROCESS

Do not install a wheel cover or attempt to mount a conventional tire on the collapsible spare wheel, since the wheel is designed specifically for the collapsible spare tire.

WARNING!

Compact and Collapsible spares are for temporary emergency use only. With these spares, do not drive more than 50 mph (80 km/h). Temporary use spares have limited tread life. When the tread is worn to the tread wear indicators, the temporary use spare tire needs to be replaced. Be sure to follow the warnings, which apply to your spare. Failure to do so could result in spare tire failure and loss of vehicle control.

Full Size Spare — If Equipped

The full size spare is for temporary emergency use only. This tire may look like the originally equipped tire on the front or rear axle of your vehicle, but it is not. This spare tire may have limited tread life. When the tread is worn to the tread wear indicators, the temporary use full size spare tire needs to be replaced. Since it is not the same as your original equipment tire, replace (or repair) the original equipment tire and reinstall on the vehicle at the first opportunity.

Limited Use Spare — If Equipped

The limited use spare tire is for temporary emergency use only. This tire is identified by a label located on the limited use spare wheel. This label contains the driving limitations for this spare. This tire may look like the original equipped tire on the front or rear axle of your vehicle, but it is not. Installation of this limited use spare tire affects vehicle handling. Since it is not the same as your original equipment tire, replace (or repair) the original equipment tire and reinstall on the vehicle at the first opportunity.

WARNING!

Limited use spares are for emergency use only. Installation of this limited use spare tire affects vehicle handling. With this tire, do not drive more than the speed listed on the limited use spare wheel. Keep inflated to the cold tire inflation pressures listed on your Tire and Loading Information Placard located on the driver's side B-Pillar or the rear edge of the driver's side door. Replace (or repair) the original equipment tire at the first opportunity and reinstall it on your vehicle. Failure to do so could result in loss of vehicle control.

DEP
DEALER ePROCESS

Wheel And Wheel Trim Care

All wheels and wheel trim, especially aluminum and chrome plated wheels, should be cleaned regularly using mild (neutral Ph) soap and water to maintain their luster and to prevent corrosion. Wash wheels with the same soap solution recommended for the body of the vehicle and remember to always wash when the surfaces are not hot to the touch.

Your wheels are susceptible to deterioration caused by salt, sodium chloride, magnesium chloride, calcium chloride, etc., and other road chemicals used to melt ice or control dust on dirt roads. Use a soft cloth or sponge and mild soap to wipe away promptly. Do not use harsh chemicals or a stiff brush. They can damage the wheel's protective coating that helps keep them from corroding and tarnishing.

CAUTION!

Avoid products or automatic car washes that use acidic solutions or strong alkaline additives or harsh brushes. Many aftermarket wheel cleaners and automatic car washes may damage the wheel's protective finish. Such damage is not covered by the New Vehicle Limited Warranty. Only car wash soap, Mopar Wheel Cleaner or equivalent is recommended.

When cleaning extremely dirty wheels including excessive brake dust, care must be taken in the selection of tire and wheel cleaning chemicals and equipment to prevent damage to the wheels. Mopar Wheel Treatment or Mopar Chrome Cleaner or their equivalent is recommended or select a non-abrasive, non-acidic cleaner for aluminum or chrome wheels.

CAUTION!

Do not use scouring pads, steel wool, a bristle brush, metal polishes or oven cleaner. These products may damage the wheel's protective finish. Such damage is not covered by the New Vehicle Limited Warranty. Only car wash soap, Mopar Wheel Cleaner or equivalent is recommended.

NOTE: If you intend parking or storing your vehicle for an extended period after cleaning the wheels with wheel cleaner, drive your vehicle and apply the brakes to remove the water droplets from the brake components. This activity will remove the red rust on the brake rotors and prevent vehicle vibration when braking.

DEP DEALER ePROCESS

Dark Vapor Chrome, Black Satin Chrome, or Low Gloss Clear Coat Wheels

CAUTION!

If your vehicle is equipped with these specialty wheels, DO NOT USE wheel cleaners, abrasives, or polishing compounds. They will permanently damage this finish and such damage is not covered by the New Vehicle Limited Warranty. HAND WASH ONLY USING MILD SOAP AND WATER WITH A SOFT CLOTH. Used on a regular basis; this is all that is required to maintain this finish.

Tire Chains (Traction Devices)

Use of traction devices require sufficient tire-to-body clearance. Follow these recommendations to guard against damage:

- Traction device must be of proper size for the tire, as recommended by the traction device manufacturer.
- Install on Front Tires.
- Due to limited clearance, a 185/55R15 tire with a Peerless Super Z6 low profile traction device or equivalent is recommended.

WARNING!

Using tires of different size and type (M+S, Snow) between front and rear axles can cause unpredictable handling. You could lose control and have a collision.

CAUTION!

To avoid damage to your vehicle or tires, observe the following precautions:

- **Because of restricted traction device clearance between tires and other suspension components, it is important that only traction devices in good condition are used. Broken devices can cause serious damage. Stop the vehicle immediately if noise occurs that could indicate device breakage. Remove the damaged parts of the device before further use.**
- **Install device as tightly as possible and then retighten after driving about ½ mile (0.8 km).**
- **Do not exceed 30 mph (48 km/h).**
- **Drive cautiously and avoid severe turns and large bumps, especially with a loaded vehicle.**

(Continued)

DEP DEALER ePROCESS

CAUTION! ***(Continued)***

- **Do not drive for a prolonged period on dry pavement.**
- **Observe the traction device manufacturer's instructions on the method of installation, operating speed, and conditions for use. Always use the suggested operating speed of the device manufacturer's if it is less than 30 mph (48 km/h).**
- **Do not use traction devices on a compact spare tire.**

Tire Rotation Recommendations

The tires on the front and rear of your vehicle operate at different loads and perform different steering, driving, and braking functions. For these reasons, they wear at unequal rates.

These effects can be reduced by timely rotation of tires. The benefits of rotation are especially worthwhile with aggressive tread designs such as those on all season type tires. Rotation will increase tread life, help to maintain mud, snow and wet traction levels, and contribute to a smooth, quiet ride.

Refer to the "Scheduled Servicing" for the proper maintenance intervals. The reasons for any rapid or unusual wear should be corrected prior to rotation being performed.

The suggested rotation method is the "forward cross" shown in the following diagram. This rotation pattern does not apply to some directional tires that must not be reversed.

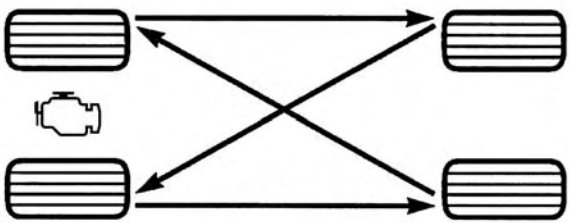

Tire Rotation

DEP DEALER ePROCESS

DEPARTMENT OF TRANSPORTATION UNIFORM TIRE QUALITY GRADES

The following tire grading categories were established by the National Highway Traffic Safety Administration. The specific grade rating assigned by the tire's manufacturer in each category is shown on the sidewall of the tires on your vehicle.

All passenger vehicle tires must conform to Federal safety requirements in addition to these grades.

Treadwear

The Treadwear grade is a comparative rating, based on the wear rate of the tire when tested under controlled conditions on a specified government test course. For example, a tire graded 150 would wear one and one-half times as well on the government course as a tire graded 100. The relative performance of tires depends upon the actual conditions of their use, however, and may depart significantly from the norm due to variations in driving habits, service practices, and differences in road characteristics and climate.

Traction Grades

The Traction grades, from highest to lowest, are AA, A, B, and C. These grades represent the tire's ability to stop on wet pavement, as measured under controlled conditions on specified government test surfaces of asphalt and concrete. A tire marked C may have poor traction performance.

WARNING!

The traction grade assigned to this tire is based on straight-ahead braking traction tests, and does not include acceleration, cornering, hydroplaning, or peak traction characteristics.

Temperature Grades

The Temperature grades are A (the highest), B, and C, representing the tire's resistance to the generation of heat and its ability to dissipate heat, when tested under controlled conditions on a specified indoor laboratory test wheel.

Sustained high temperature can cause the material of the tire to degenerate and reduce tire life, and excessive temperature can lead to sudden tire failure. The grade C

DEP DEALER ePROCESS

corresponds to a level of performance, which all passenger vehicle tires must meet under the Federal Motor Vehicle Safety Standard No. 109. Grades B and A represent higher levels of performance on the laboratory test wheel, than the minimum required by law.

WARNING!

The temperature grade for this tire is established for a tire that is properly inflated and not overloaded. Excessive speed, under-inflation, or excessive loading, either separately or in combination, can cause heat buildup and possible tire failure.

VEHICLE STORAGE

If you will not be using your vehicle for more than 21 days, you may want to take steps to preserve your battery.

- Disconnect the negative cable from the battery.
- Anytime you store your vehicle, or keep it out of service (i.e., vacation) for two weeks or more, run the air conditioning system at idle for about five minutes in the fresh air and high blower setting. This will ensure adequate system lubrication to minimize the possibility of compressor damage when the system is started again.

NOTE: When the vehicle has not been started or driven for at least 30 days, an Extended Park Start Procedure is required to start the vehicle. Refer to "Starting The Engine" in "Starting And Operating" for further information.

BODYWORK

Protection From Atmospheric Agents

Vehicle body care requirements vary according to geographic locations and usage. Chemicals that make roads passable in snow and ice and those that are sprayed on trees and road surfaces during other seasons are highly corrosive to the metal in your vehicle. Outside parking, which exposes your vehicle to airborne contaminants, road surfaces on which the vehicle is operated, extreme hot or cold weather and other extreme conditions will have an adverse effect on paint, metal trim, and underbody protection.

The following maintenance recommendations will enable you to obtain maximum benefit from the corrosion resistance built into your vehicle.

What Causes Corrosion?

Corrosion is the result of deterioration or removal of paint and protective coatings from your vehicle.

DEP DEALER ePROCESS

The most common causes are:

- Road salt, dirt and moisture accumulation.
- Stone and gravel impact.
- Insects, tree sap and tar.
- Salt in the air near seacoast localities.
- Atmospheric fallout/industrial pollutants.

Body And Underbody Maintenance

Cleaning Headlights

Your vehicle is equipped with plastic headlights and fog lights that are lighter and less susceptible to stone breakage than glass headlights.

Plastic is not as scratch resistant as glass and therefore different lens cleaning procedures must be followed.

To minimize the possibility of scratching the lenses and reducing light output, avoid wiping with a dry cloth. To remove road dirt, wash with a mild soap solution followed by rinsing.

Do not use abrasive cleaning components, solvents, steel wool or other aggressive material to clean the lenses.

Preserving The Bodywork

Washing

- Wash your vehicle regularly. Always wash your vehicle in the shade using Mopar Car Wash, or a mild car wash soap, and rinse the panels completely with clear water.
- If insects, tar, or other similar deposits have accumulated on your vehicle, use Mopar Super Kleen Bug and Tar Remover to remove.
- Use a high quality cleaner wax, such as Mopar Cleaner Wax to remove road film, stains and to protect your paint finish. Take care never to scratch the paint.
- Avoid using abrasive compounds and power buffing that may diminish the gloss or thin out the paint finish.

CAUTION!

- **Do not use abrasive or strong cleaning materials such as steel wool or scouring powder that will scratch metal and painted surfaces.**
- **Use of power washers exceeding 1,200 psi (8,274 kPa) can result in damage or removal of paint and decals.**

DEP DEALER ePROCESS

Special Care

- If you drive on salted or dusty roads or if you drive near the ocean, hose off the undercarriage at least once a month.
- It is important that the drain holes in the lower edges of the doors, rocker panels, and trunk be kept clear and open.
- If you detect any stone chips or scratches in the paint, touch them up immediately. The cost of such repairs is considered the responsibility of the owner.
- If your vehicle is damaged due to a collision or similar cause that destroys the paint and protective coating, have your vehicle repaired as soon as possible. The cost of such repairs is considered the responsibility of the owner.
- If you carry special cargo such as chemicals, fertilizers, de-icer salt, etc., be sure that such materials are well packaged and sealed.
- If a lot of driving is done on gravel roads, consider mud or stone shields behind each wheel.
- Use Mopar Touch Up Paint on scratches as soon as possible. An authorized dealer has touch up paint to match the color of your vehicle.

Convertible Top Care — If Equipped

NOTE: Lubricate the top rails with Berulub FR 43 every 2000 cycles or if scratching noises due to dust are present.

CAUTION!

Failure to follow these cautions may cause interior water damage, stains or mildew on the top material:

- **Avoid high-pressure car washes, as they can damage the top material. Also, increased water pressure may force past the weather strips.**
- **Remove any standing water from the top and dry the surface before opening it. Operating the top, opening a door or lowering a window while the top is wet may allow water to drip into the vehicles interior.**
- **Use care when washing the vehicle, water pressure directed at the weather strip seals may cause water to leak into the vehicles interior.**

Immediate removal of any contaminant is recommended. Regular washing of the top will enhance its life and appearance, and make successive cleanings easier. Do not subject the top to excessive heat. Frequently vacuum the top and storage compartment.

DEP DEALER ePROCESS

Washing

Hand washing is highly recommended. Automatic car washing equipment can damage the top material. If you must use an automatic car wash, soft cloth systems are preferred.

CAUTION!

Avoid high-pressure car washes, as they can damage the top material. Also, increased water pressure may force water past the weather strips.

General Cleaning

Careful vacuuming of the top before washing is helpful in removing dust and other foreign particles. Wash in partial shade instead of direct sun. Wet the entire vehicle before washing the top. The top should be washed with a soft, natural bristle scrub brush, and a mild soap solution such as liquid dishwashing soap. Do not use detergent.

CAUTION!

Never use an abrasive type cleaner or bleaches. Cleaners should not contain silicones, organic solvents, petroleum distillates, or plasticizers. Always wait until the top is thoroughly dry before lowering it into the storage area.

Scrub in all directions, covering an area of about two square feet at a time. Avoid heavy scrubbing. Rinse the entire vehicle with water to remove all soap and dirt from the top fabric and to prevent streaking on painted and chrome surfaces. Allow the top to dry before lowering. Vacuuming the top with a wet/dry shop vacuum will decrease the top's drying time, ensure removal of all dirt, and delete streaks in the material. Multiple cleanings may be necessary to remove stubborn stains. If stains persist, contact your local authorized dealer for further suggestions.

DEP
DEALER ePROCESS

INTERIORS

Seats And Fabric Parts

Use Mopar Total Clean to clean fabric upholstery and carpeting.

WARNING!

Do not use volatile solvents for cleaning purposes. Many are potentially flammable, and if used in closed areas they may cause respiratory harm.

Seat Belt Maintenance

Do not bleach, dye or clean the belts with chemical solvents or abrasive cleaners. This will weaken the fabric. Sun damage can also weaken the fabric.

If the belts need cleaning, use a mild soap solution or lukewarm water. Do not remove the belts from the vehicle to wash them. Dry with a soft cloth.

Replace the belts if they appear frayed or worn or if the buckles do not work properly.

WARNING!

A frayed or torn belt could rip apart in a collision and leave you with no protection. Inspect the belt system periodically, checking for cuts, frays, or loose parts. Damaged parts must be replaced immediately. Do not disassemble or modify the system. Seat belt assemblies must be replaced after a collision if they have been damaged (i.e., bent retractor, torn webbing, etc.).

Plastic And Coated Parts

Use Mopar Total Clean to clean vinyl upholstery.

CAUTION!

- **Direct contact of air fresheners, insect repellents, suntan lotions, or hand sanitizers to the plastic, painted, or decorated surfaces of the interior may cause permanent damage. Wipe away immediately.**
- **Damage caused by these type of products may not be covered by your New Vehicle Limited Warranty.**

DEP DEALER ePROCESS

Cleaning Plastic Instrument Cluster Lenses

The lenses in front of the instruments in this vehicle are molded in clear plastic. When cleaning the lenses, care must be taken to avoid scratching the plastic.

1. Clean with a wet soft cloth. A mild soap solution may be used, but do not use high alcohol content or abrasive cleaners. If soap is used, wipe clean with a clean damp cloth.
2. Dry with a soft cloth.

Leather Parts

Mopar Total Clean is specifically recommended for leather upholstery.

Your leather upholstery can be best preserved by regular cleaning with a damp soft cloth. Small particles of dirt can act as an abrasive and damage the leather upholstery and should be removed promptly with a damp cloth. Stubborn soils can be removed easily with a soft cloth and Mopar Total Clean. Care should be taken to avoid soaking your leather upholstery with any liquid. Please do not use polishes, oils, cleaning fluids, solvents, detergents, or ammonia-based cleaners to clean your leather upholstery. Application of a leather conditioner is not required to maintain the original condition.

NOTE: If equipped with light colored leather, it tends to show any foreign material, dirt, and fabric dye transfer more so than darker colors. The leather is designed for easy cleaning, and FCA recommends Mopar total care leather cleaner applied on a cloth to clean the leather seats as needed.

CAUTION!

Do not use Alcohol and Alcohol-based and/or Ketone based cleaning products to clean leather upholstery, as damage to the upholstery may result.

Glass Surfaces

All glass surfaces should be cleaned on a regular basis with Mopar Glass Cleaner, or any commercial household-type glass cleaner. Never use an abrasive type cleaner. Use caution when cleaning the inside rear window equipped with electric defrosters or windows equipped with radio antennas. Do not use scrapers or other sharp instruments that may scratch the elements.

When cleaning the rear view mirror, spray cleaner on the towel or cloth that you are using. Do not spray cleaner directly on the mirror.

DEP DEALER ePROCESS

TECHNICAL SPECIFICATIONS

CONTENTS

■ VEHICLE IDENTIFICATION NUMBER 284
■ BRAKE SYSTEM 285
■ WHEEL AND TIRE TORQUE SPECIFICATIONS . . .285
□ Torque Specifications 285
■ FUEL REQUIREMENTS 287
□ 1.4L Engine LA 287
□ Reformulated Gasoline 287
□ Materials Added To Fuel 287
□ Gasoline/Oxygenate Blends 288
□ Do Not Use E-85 In Non-Flex Fuel Vehicles 288
□ CNG And LP Fuel System Modifications 289
□ MMT In Gasoline. 289
□ Fuel System Cautions 289
□ Carbon Monoxide Warnings 290
■ FLUID CAPACITIES 290
■ FLUIDS AND LUBRICANTS 291
□ Engine 291
□ Chassis 293

DEP DEALER ePROCESS

VEHICLE IDENTIFICATION NUMBER

The Vehicle Identification Number (VIN) is found on the left front corner of the instrument panel, visible through the windshield. This number also appears engraved on the right front door sill, under the sill scuff plate, on an adhesive label applied to the right door opening on the B-Pillar, on the vehicle registration and title.

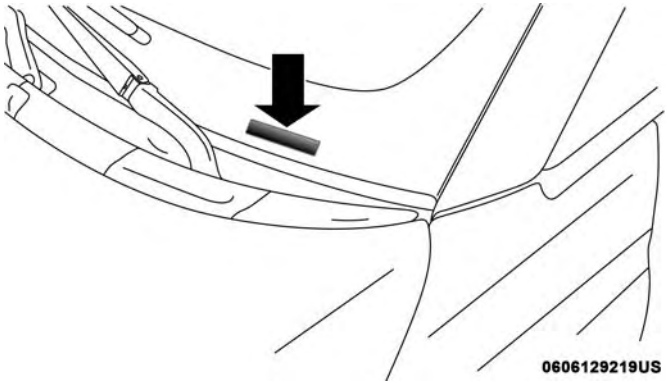

Vehicle Identification Number

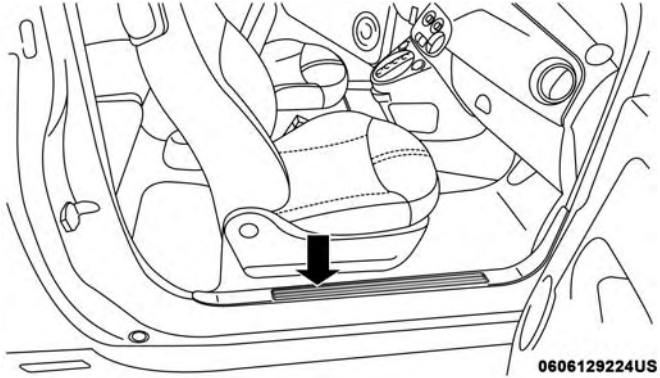

Stamped VIN Location

NOTE: It is illegal to remove or alter the VIN.

DEP
DEALER ePROCESS

BRAKE SYSTEM

Your vehicle is equipped with dual hydraulic brake systems. If either of the two hydraulic systems loses normal capability, the remaining system will still function. However, there will be some loss of overall braking effectiveness. You may notice increased pedal travel during application, greater pedal force required to slow or stop, and potential activation of the Brake Warning Light.

In the event power assist is lost for any reason (i.e., repeated brake applications with the engine OFF) the brakes will still function. However, the effort required to brake the vehicle will be much greater than that required with the power system operating.

WHEEL AND TIRE TORQUE SPECIFICATIONS

Proper lug nut/bolt torque is very important to ensure that the wheel is properly mounted to the vehicle. Any time a wheel has been removed and reinstalled on the vehicle, the lug nuts/bolts should be torqued using a properly calibrated torque wrench using a high quality six sided (hex) deep wall socket.

Torque Specifications

Lug Nut/Bolt Torque	**Lug Nut/ Bolt Size	Lug Nut/ Bolt Socket Size
66 Ft-Lbs (90 N·m) **Steel Wheels Only** 74 Ft-Lbs (100 N·m) **Aluminum Wheels Only**	M12 x 1.25	17 mm

**Use only your authorized dealer recommended lug nuts/ bolts and clean or remove any dirt or oil before tightening.

DEP DEALER ePROCESS

Inspect the wheel mounting surface prior to mounting the tire and remove any corrosion or loose particles.

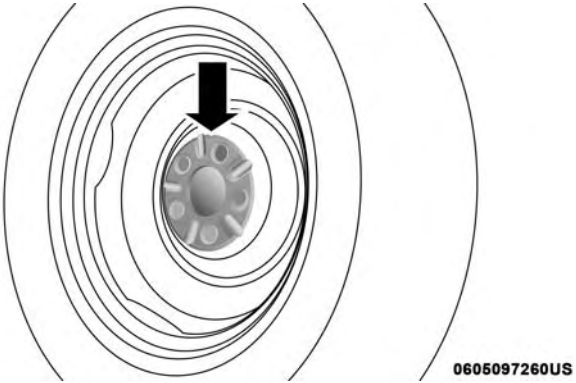

Wheel Mounting Surface

Tighten the lug nuts/bolts in a star pattern until each nut/bolt has been tightened twice.

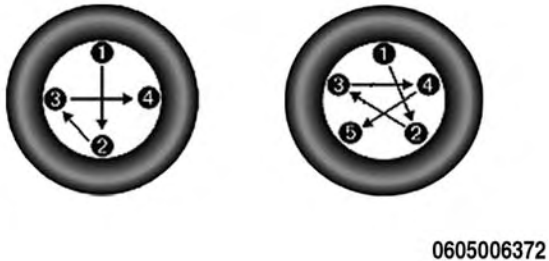

Torque Patterns

After 25 miles (40 km), check the lug nut/bolt torque to be sure that all the lug nuts/bolts are properly seated against the wheel.

WARNING!

To avoid the risk of forcing the vehicle off the jack, do not tighten the lug nuts/bolts fully until the vehicle has been lowered. Failure to follow this warning may result in personal injury.

DEP
DEALER ePROCESS

FUEL REQUIREMENTS

1.4L Engine LA

This engine is designed to meet all emission regulations, provide satisfactory fuel economy and performance when using high-quality unleaded "Regular" gasoline having a posted octane number of 87 as specified by the (R+M)/2 method. For optimum performance and fuel economy the use of "Premium" 91 octane gasoline or higher is recommended.

While operating on gasoline with an octane number of 87, hearing a light knocking sound from the engine is not a cause for concern. However, if the engine is heard making a heavy knocking sound, see your dealer immediately. Use of gasoline with an octane number lower than 87 can cause engine failure and may void or not be covered by the New Vehicle Limited Warranty.

Poor quality gasoline can cause problems such as hard starting, stalling, and hesitations. If you experience these symptoms, try another brand of gasoline before considering service for the vehicle.

Reformulated Gasoline

Many areas of the country require the use of cleaner burning gasoline referred to as "Reformulated Gasoline". Reformulated gasoline contains oxygenates and are specifically blended to reduce vehicle emissions and improve air quality.

The use of reformulated gasoline is recommended. Properly blended reformulated gasoline will provide improved performance and durability of engine and fuel system components.

Materials Added To Fuel

Besides using unleaded gasoline with the proper octane rating, gasolines that contain detergents, corrosion and stability additives are recommended. Using gasolines that have these additives will help improve fuel economy, reduce emissions, and maintain vehicle performance.

Designated TOP TIER Detergent Gasoline contains a higher level of detergents to further aide in minimizing engine and fuel system deposits. When available, the usage of TOP TIER Detergent gasoline is recommended. Visit www.toptiergas.com for a list of TOP TIER Detergent Gasoline Retailers.

DEP
DEALER ePROCESS

Indiscriminate use of fuel system cleaning agents should be avoided. Many of these materials intended for gum and varnish removal may contain active solvents or similar ingredients. These can harm fuel system gasket and diaphragm materials.

Gasoline/Oxygenate Blends

Some fuel suppliers blend unleaded gasoline with oxygenates such as ethanol.

CAUTION!

DO NOT use E-85, gasoline containing methanol, or gasoline containing more than 15% ethanol (E-15). Use of these blends may result in starting and drivability problems, damage critical fuel system components, cause emissions to exceed the applicable standard, and/or cause the Malfunction Indicator Light to illuminate. Please observe pump labels as they should clearly communicate if a fuel contains greater than 15% ethanol (E-15).

Problems that result from using gasoline containing more than 15% ethanol (E-15) or gasoline containing methanol are not the responsibility of the manufacturer and may void or not be covered under New Vehicle Limited Warranty.

Do Not Use E-85 In Non-Flex Fuel Vehicles

Non-Flex Fuel Vehicles (FFV) are compatible with gasoline containing up to 15% ethanol (E-15). Use of gasoline with higher ethanol content may void the New Vehicle Limited Warranty.

If a Non-FFV vehicle is inadvertently fueled with E-85 fuel, the engine will have some or all of these symptoms:

- Operate in a lean mode.
- OBD II “Malfunction Indicator Light” on.
- Poor engine performance.
- Poor cold start and cold drivability.
- Increased risk for fuel system component corrosion.

DEP
DEALER ePROCESS

CNG And LP Fuel System Modifications

Modifications that allow the engine to run on Compressed Natural Gas (CNG) or Liquid Propane (LP) may result in damage to the engine, emissions, and fuel system components. Problems that result from running CNG or LP are not the responsibility of the manufacturer and may void or not be covered under the New Vehicle Limited Warranty.

MMT In Gasoline

Methylcyclopentadienyl Manganese Tricarbonyl (MMT) is a manganese-containing metallic additive that is blended into some gasoline to increase octane. Gasoline blended with MMT provides no performance advantage beyond gasoline of the same octane number without MMT. Gasoline blended with MMT reduces spark plug life and reduces emissions system performance in some vehicles. The manufacturer recommends that gasoline without MMT be used in your vehicle. The MMT content of gasoline may not be indicated on the gasoline pump; therefore, you should ask your gasoline retailer whether the gasoline contains MMT. MMT is prohibited in Federal and California reformulated gasoline.

Fuel System Cautions

CAUTION!

Follow these guidelines to maintain your vehicle's performance:

- **The use of leaded gasoline is prohibited by Federal law. Using leaded gasoline can impair engine performance and damage the emissions control system.**
- **An out-of-tune engine or certain fuel or ignition malfunctions can cause the catalytic converter to overheat. If you notice a pungent burning odor or some light smoke, your engine may be out of tune or malfunctioning and may require immediate service. Contact an authorized dealer for service assistance.**
- **The use of fuel additives, which are now being sold as octane enhancers, is not recommended. Most of these products contain high concentrations of methanol. Fuel system damage or vehicle performance problems resulting from the use of such fuels or additives is not the responsibility of the manufacturer and may void or not be covered under the New Vehicle Limited Warranty.**

DEP DEALER ePROCESS

NOTE: Intentional tampering with the emissions control system can result in civil penalties being assessed against you.

Carbon Monoxide Warnings

WARNING!

Carbon monoxide (CO) in exhaust gases is deadly. Follow the precautions below to prevent carbon monoxide poisoning:

- **Do not inhale exhaust gases. They contain carbon monoxide, a colorless and odorless gas, which can**

(Continued)

WARNING! *(Continued)*

kill. Never run the engine in a closed area, such as a garage, and never sit in a parked vehicle with the engine running for an extended period. If the vehicle is stopped in an open area with the engine running for more than a short period, adjust the ventilation system to force fresh, outside air into the vehicle.

- **Guard against carbon monoxide with proper maintenance. Have the exhaust system inspected every time the vehicle is raised. Have any abnormal conditions repaired promptly. Until repaired, drive with all side windows fully open.**

FLUID CAPACITIES

	U.S.	Metric
Fuel (Approximate)	10.5 Gallons	40 Liters
Engine Oil with Filter		
1.4L LA Engine	4 Quarts	3.8 Liters

DEP DEALER ePROCESS

	U.S.	Metric
Cooling System		
1.4L LA Engine (Mopar Antifreeze/Engine Coolant 10 Year/ 150,000 Mile (240,000 km) Formula) — with Manual Transmission	4.6 Quarts	4.4 Liters
1.4L LA Engine (Mopar Antifreeze/Engine Coolant 10 Year/ 150,000 Mile (240,000 km) Formula) — with Automatic Transmission	5.8 Quarts	5.5 Liters

FLUIDS AND LUBRICANTS

Engine

Component	Fluid, Lubricant, or Genuine Part
Engine Coolant – 1.4L LA Engine	We recommend you use Mopar Antifreeze/Coolant 10 Year/150,000 Mile (240,000 km) Formula OAT (Organic Additive Technology) meeting the requirements of FCA Material Standard MS.90032.
Engine Oil – 1.4L LA Engine	We recommend you use API Certified SAE 5W-30 Engine Oil, meeting the requirements of FCA Material Standard FPW9.55535-G1. Refer to your engine oil filler cap for correct SAE grade.
Engine Oil Filter – 1.4L LA Engine	We recommend you use a Mopar Engine Oil Filter.

DEP DEALER ePROCESS

Component	Fluid, Lubricant, or Genuine Part
Spark Plugs – 1.4L LA Engine	We recommend you use Mopar Spark Plugs.
Fuel Selection – 1.4L LA Engine	91 Octane Recommended – 87 Octane Acceptable, 0-15% Ethanol.

CAUTION!

- **Mixing of engine coolant (antifreeze) other than specified Organic Additive Technology (OAT) engine coolant (antifreeze), may result in engine damage and may decrease corrosion protection. Organic Additive Technology (OAT) engine coolant is different and should not be mixed with Hybrid Organic Additive Technology (HOAT) engine coolant (antifreeze) or any "globally compatible" coolant (antifreeze). If a non-OAT engine coolant (antifreeze) is introduced into the cooling system in an emergency, the cooling system will need to be drained, flushed, and refilled with fresh OAT coolant (conforming to MS.90032), by an authorized dealer as soon as possible.**

(Continued)

CAUTION! ***(Continued)***

- **Do not use water alone or alcohol-based engine coolant (antifreeze) products. Do not use additional rust inhibitors or antirust products, as they may not be compatible with the radiator engine coolant and may plug the radiator.**
- **This vehicle has not been designed for use with propylene glycol-based engine coolant (antifreeze). Use of propylene glycol-based engine coolant (antifreeze) is not recommended.**

DEP DEALER ePROCESS

Chassis

Component	Fluid, Lubricant, or Genuine Part
Manual Transmission – If Equipped	We recommend you use Mopar C635 DDCT/MTX Transmission Fluid.
Automatic Transmission – If Equipped	Use only Mopar AW-1 Automatic Transmission Fluid or equivalent. Failure to use the correct fluid may affect the function or performance of your transmission.
Brake Master Cylinder	We recommend you use Mopar DOT 3, SAE J1703 should be used. If DOT 3, SAE J1703 brake fluid is not available, then DOT 4 is acceptable.
Convertible Top Rails – If Equipped	We recommend you use Berulub FR 43.

DEP
DEALER ePROCESS

DEP
DEALER ePROCESS

MULTIMEDIA

CONTENTS

- UCONNECT SYSTEMS 296
- CYBERSECURITY 296
- UCONNECT SETTINGS 297
  - Customer Programmable Features — Uconnect 3/3 NAV Display Settings. 298
- STEERING WHEEL AUDIO CONTROLS 307
  - Radio Operation. 307
  - Media Mode 307
- IPOD/USB/MEDIA PLAYER CONTROL — IF EQUIPPED 308
- RADIO OPERATION AND MOBILE PHONES . . .308
  - General Information 308
- UCONNECT 3/3 NAV VOICE RECOGNITION QUICK TIPS 309
  - Introducing Uconnect 309
  - Get Started 309
  - Basic Voice Commands 310
  - Radio 311
  - Media 311
  - Phone 312
  - General Information 313
  - Additional Information. 313
- CD/DVD DISC MAINTENANCE 314

DEP DEALER ePROCESS

UCONNECT SYSTEMS

For detailed information about your Uconnect system, refer to your Uconnect Owner's Manual Supplement.

NOTE: Uconnect screen images are for illustration purposes only and may not reflect exact software for your vehicle.

CYBERSECURITY

Your vehicle may be a connected vehicle and may be equipped with both wired and wireless networks. These networks allow your vehicle to send and receive information. This information allows systems and features in your vehicle to function properly.

Your vehicle may be equipped with certain security features to reduce the risk of unauthorized and unlawful access to vehicle systems and wireless communications. Vehicle software technology continues to evolve over time and FCA US LLC, working with its suppliers, evaluates and takes appropriate steps as needed. Similar to a computer or other devices, your vehicle may require software updates to improve the usability and performance of your systems or to reduce the potential risk of unauthorized and unlawful access to your vehicle systems.

The risk of unauthorized and unlawful access to your vehicle systems may still exist, even if the most recent version of vehicle software (such as Uconnect software) is installed.

WARNING!

- **It is not possible to know or to predict all of the possible outcomes if your vehicle's systems are breached. It may be possible that vehicle systems, including safety related systems, could be impaired or a loss of vehicle control could occur that may result in an accident involving serious injury or death.**
- **ONLY insert media (e.g., USB, SD card, or CD) into your vehicle if it came from a trusted source. Media of unknown origin could possibly contain malicious software, and if installed in your vehicle, it may increase the possibility for vehicle systems to be breached.**
- **As always, if you experience unusual vehicle behavior, take your vehicle to your nearest authorized dealer immediately.**

DEP DEALER ePROCESS

NOTE:

- FCA US LLC or your dealer may contact you directly regarding software updates.
- To help further improve vehicle security and minimize the potential risk of a security breach, vehicle owners should:
  - Routinely check www.driveuconnect.com/support/software-update.html (U.S. Residents) or www.driveuconnect.ca (Canadian Residents) to learn about available Uconnect software updates.
  - Only connect and use trusted media devices (e.g. personal mobile phones, USBs, CDs).

Privacy of any wireless and wired communications cannot be assured. Third parties may unlawfully intercept information and private communications without your consent. For further information, refer to "Onboard Diagnostic System (OBD II) Cybersecurity" in "Getting To Know Your Instrument Panel".

UCONNECT SETTINGS

The Uconnect system uses a combination of buttons on the touchscreen and buttons on the faceplate located on the center of the instrument panel that allows you to access and change the customer programmable features. Many features can vary by vehicle.

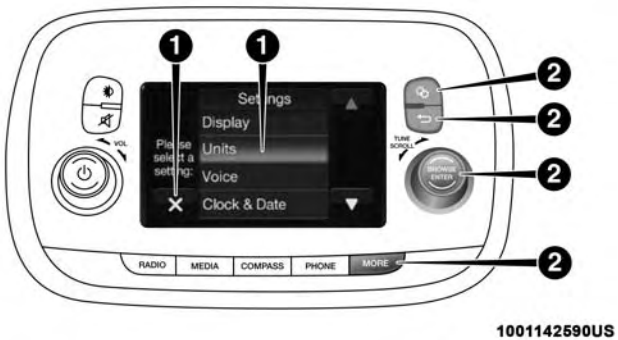

Uconnect 3/3 NAV Display Buttons On The Touchscreen And Buttons On The Faceplate

1 — Uconnect Buttons On The Touchscreen
2 — Uconnect Buttons On The Faceplate

DEP DEALER ePROCESS

Customer Programmable Features — Uconnect 3/3 NAV Display Settings

Push the Settings button on the faceplate, to display the settings menu screen. In this mode the Uconnect system allows you to access programmable feature settings.

NOTE: Only one touchscreen area may be selected at a time.

When making a selection, press the button on the touchscreen to enter the desired mode. Once in the desired mode, press and release the preferred setting and make your selection. Once the setting is complete, either press the back arrow button on the touchscreen or push the back button on the faceplate to return to the previous menu. Or press the "X" button on the touchscreen to close out of the settings screen. Pressing the up or down arrow buttons on the right side of the screen allows you to toggle up or down through the available settings.

NOTE: All settings should be changed with the ignition in the "AVV/MAR" position.

Display

After pressing the "Display" button on the touchscreen, the following settings will be available:

Setting Name	Selectable Options		
Display Mode	Auto	Manual	
NOTE: When the "Display Mode" feature is set to "Auto" the radio touchscreen's brightness is adjusted with all other instrument panel displays and lights when they are adjusted using the instrument cluster display buttons on the right-hand side of the instrument cluster display. When the "Display Mode" feature is set to "Manual" the radio screen brightness can be adjusted independently using the "Brightness" feature below:			
Brightness	+	–	
Language	English	Español	Français
Touchscreen Beep	On	Off	

DEP DEALER ePROCESS

Units

After pressing the "Units" button on the touchscreen, you may select each unit of measure independently displayed in the instrument cluster display. The following selectable units of measure are listed below:

Setting Name	Selectable Options
US	Changes the instrument cluster display to US units of measure.
Metric	Changes the instrument cluster display to Metric units of measure.

After pressing "Custom" on the touchscreen, you may select from one of the below menu items:

Setting Name	Selectable Options	
Fuel Consumption	MPG (US)	L/100 km
	MPG (UK)	km/L
Temperature	°C	°F
Pressure	psi	kPa

DEP DEALER ePROCESS

Voice

After pressing the "Voice" button on the touchscreen, the following settings will be available:

Setting Name	Selectable Options		
Voice Response Length	Brief	Long	
Show Command List	Always	With Help	Never

Clock & Date

After pressing the "Clock & Date" button on the touchscreen, the following settings will be available:

Setting Name	Selectable Options	
Set Time and Format	12 hour	24 hour
NOTE: Press the corresponding arrow above and below the current time to adjust, then select "AM" or "PM."		
Show Time Status	On	Off
Set Date	Set Date	
NOTE: Press the corresponding arrows above and below the current date to adjust.		
Sync Time — If Equipped	On	Off
NOTE: When in the "Sync Time" display, you may sync the time with GPS.		

DEP
DEALER ePROCESS

Safety/Assistance

After pressing the "Safety/Assistance" button on the touchscreen, the following settings will be available:

Setting Name	Selectable Options	
Hill Start Assist — If Equipped	On	Off
Rear View Camera Delay	On	Off
ParkView Backup Camera Active Guide Lines — If Equipped	On	Off
NOTE: When this feature is enabled, active (dynamic) grid lines are overlaid on the Rear Backup Camera image to illustrate the width of the vehicle and its projected back up path based on the steering wheel position. A dashed center line overlay indicates the center of the vehicle to assist with parking or aligning to a hitch/receiver.		
ParkView Backup Camera Fixed Guide Lines — If Equipped	On	Off
NOTE: When this feature is enabled, fixed (static) grid lines are overlaid on the Rear Backup Camera image to illustrate the width of the vehicle.		

DEP DEALER ePROCESS

Lights

After pressing the "Lights" button on the touchscreen, the following settings will be available:

Setting Name	Selectable Options	
Daytime Running Lights	On	Off

Doors & Locks

After pressing the "Doors & Locks" button on the touchscreen, the following settings will be available:

Setting Name	Selectable Options	
Auto Door Locks	On	Off
NOTE: When the "Auto Door Locks" feature is selected, all doors will lock automatically when the vehicle reaches a speed of 12 mph (20 km/h).		
Remote Door Unlock/Door Unlock	Driver	All
NOTE: When "Driver" is selected, only the driver's door will unlock on the first push of the key fob unlock button, you must push the key fob unlock button twice to unlock the passenger's doors. When "All" is selected, all of the doors will unlock on the first push of the key fob unlock button.		

DEP DEALER ePROCESS

Engine Off Options

After pressing the "Engine Off Options" button on the touchscreen, the following settings will be available:

Setting Name	Selectable Options	
Radio Off Delay	0 min.	20 min.

Audio

After pressing the "Audio" button on the touchscreen, the following settings will be available:

Setting Name	Selectable Options	
Equalizer	+	–
NOTE: • When in the "Equalizer" display, you may adjust the Bass, Mid and Treble settings. • Bass/Mid/Treble allow you to simply slide your finger up or down to change the setting as well as press directly on the desired setting.		
Balance/Fade	When in the "Balance/ Fade" display, you may adjust the Balance settings.	

DEP DEALER ePROCESS

Setting Name	Selectable Options		
Auto-On Radio	On	Off	Recall Last
NOTE: When the "Auto-On Radio" feature is selected, the radio automatically turns on when the vehicle is in RUN or recalls whether it was on or off at last ignition off.			
Radio Off With Door	On	Off	
NOTE: When the "Radio Off With Door" feature is selected, the radio remains on until the driver or passenger door is opened or when the Radio Off Delay time expires.			

Phone/Bluetooth

After pressing the "Phone/Bluetooth" button on the touch-screen, the following settings will be available:

Setting Name	Selectable Options
Paired Phones	List of Paired Phones
NOTE: The "Paired Phones" feature shows which phones are paired to the Phone/Bluetooth system. For further information, refer to the Uconnect Owner's Manual Supplement.	

DEP
DEALER ePROCESS

SiriusXM Setup — If Equipped

After pressing the "SiriusXM Setup" button on the touch-screen, the following settings will be available:

Setting Name	Selectable Options	
Tune Start	On	Off
NOTE: "Tune Start" begins playing the current song from the beginning when you tune to a music channel using one of the 12 presets, so you can enjoy the complete song. This feature occurs the first time the preset is selected during that current song. "Tune Start" works in the background, so you will not even realize it's on, except that you will miss the experience of joining your favorite song with only a few seconds left to play.		
Channel Skip	Channel Skip	
NOTE: SiriusXM can be programmed to designate a group of channels that are the most desirable to listen to or to exclude undesirable channels while scanning.		
Subscription Information	Subscription Info	
NOTE: • New vehicle purchasers or lessees will receive a free limited time subscription to SiriusXM Satellite Radio with your radio. Following the expiration of the free services, it will be necessary to access the information on the Subscription Information screen to re-subscribe. • Write down the SIRIUS ID numbers for your receiver. To reactivate your service, either call the number listed on the screen or visit the provider online.		

DEP DEALER ePROCESS

Restore Settings

After pressing the "Restore Settings" button on the touch-screen, the following settings will be available:

Setting Name	Selectable Options	
Restore Settings	Yes	No
NOTE: When the "Restore Settings" feature is selected it will reset the Display, Clock, Audio, and Radio Settings to their default settings. To restore the settings to their default setting, press the Restore Settings button. A pop-up will appear asking "Are you sure you want to reset your settings to default?" Once the settings are restored, a pop up appears stating "settings reset to default".		

Clear Personal Data

After pressing the "Clear Personal Data Settings" button on the touchscreen, the following settings will be available:

Setting Name	Selectable Options	
Clear Personal Data	Yes	No
NOTE: When this feature is selected, it will remove personal data including Bluetooth devices and presets. To remove personal information, press the "Clear Personal Data" button and a pop-up will appear asking "Are you sure you want to clear all personal data?" Once the data has been cleared, a pop up appears stating "Personal data cleared".		

DEP DEALER ePROCESS

STEERING WHEEL AUDIO CONTROLS

The remote sound system controls are located on the rear surface of the steering wheel. Reach behind the wheel to access the switches.

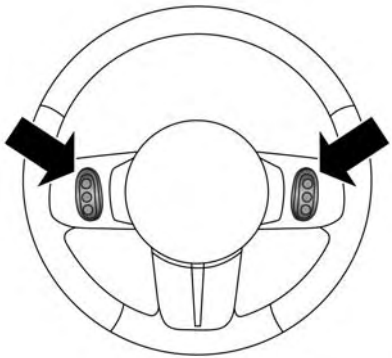

Sound System Controls (Back View Of Steering Wheel)

The right-hand control is a rocker-type switch with a pushbutton in the center and controls the volume and mode of the sound system. Pushing the top of the rocker switch increases the volume, and pushing the bottom of the rocker switch decreases the volume.

Pushing the center button makes the radio switch between the various modes available (AM/FM/SAT/AUX/Media Player, etc.) and can also be used to select/enter an item while scrolling through menu.

The left-hand control is a rocker-type switch with a push-button in the center. The function of the left-hand control is different depending on which mode you are in.

The following describes the left-hand control operation in each mode.

Radio Operation

Pushing the top of the switch will “Seek” up for the next listenable station and pushing the bottom of the switch will “Seek” down for the next listenable station.

The button located in the center of the left-hand control will tune to the next preset station that you have programmed in the radio preset button.

Media Mode

Pushing the top of the switch once goes to the next track on the selected media (AUX/USB/Bluetooth). Pushing the bottom of the switch once goes to the beginning of the current track, or to the beginning of the previous track if it is within eight seconds after the current track begins to play.

DEALER ePROCESS

IPOD/USB/MEDIA PLAYER CONTROL — IF EQUIPPED

This feature allows an iPod or external USB device to be plugged into the USB or AUX port, located on the center console.

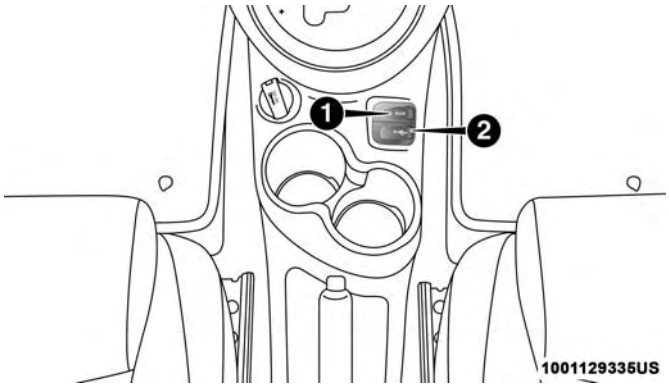

USB/AUX Port

1 — Auxiliary Cable Jack
2 — USB Connector

RADIO OPERATION AND MOBILE PHONES

Under certain conditions, the mobile phone being on in your vehicle can cause erratic or noisy performance from your radio. This condition may be lessened or eliminated by relocating the mobile phone antenna. This condition is not harmful to the radio. If your radio performance does not satisfactorily "clear" by the repositioning of the antenna, it is recommended that the radio volume be turned down or off during mobile phone operation.

General Information

The following regulatory statement applies to all Radio Frequency (RF) devices equipped in this vehicle:

This device complies with Part 15 of the FCC Rules and with Industry Canada license-exempt RSS standard(s). Operation is subject to the following two conditions:

- This device may not cause harmful interference, and
- This device must accept any interference received, including interference that may cause undesired operation.

NOTE: Changes or modifications not expressly approved by the party responsible for compliance could void the user's authority to operate the equipment.

DEP
DEALER ePROCESS

UCONNECT 3/3 NAV VOICE RECOGNITION QUICK TIPS

Introducing Uconnect

Start using Uconnect Voice Recognition with these helpful quick tips. It provides the key Voice Commands and tips you need to know to control your Uconnect system.

Uconnect 3/3 NAV

Get Started

1. Visit UconnectPhone.com to check mobile device and feature compatibility and to find phone pairing instructions.
2. Reduce background noise. Wind and passenger conversations are examples of noise that may impact recognition.
3. Speak clearly at a normal pace and volume while facing straight ahead. The microphone is positioned on the rearview mirror and aimed at the driver.
4. Each time you give a Voice Command, you must first push either the VR or PHONE button, wait until **after** the beep, then say your Voice Command.
5. You can interrupt the help message or system prompts by pushing the VR or PHONE button and saying a Voice Command from current category.

DEP
DEALER ePROCESS

All you need to control your Uconnect system with your voice are the buttons on your steering wheel.

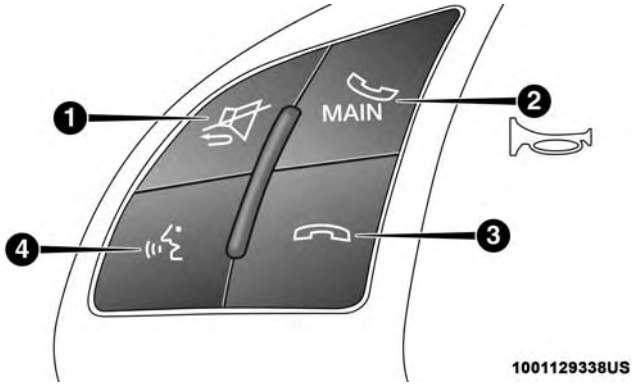

VR And Phone Buttons

1 — Push To MUTE
2 — Push To Initiate Or To Answer A Phone Call, Send Or Receive A Text
3 — Push To End Call
4 — Push To Begin Radio Or Media Functions

Basic Voice Commands

The basic Voice Commands below can be given at any point while using your Uconnect system.

Push the VR button . After the beep, say:

- " **Cancel**" to stop a current voice session
- " **Help**" to hear a list of suggested Voice Commands
- " **Repeat**" to listen to the system prompts again

Notice the visual cues that inform you of your voice recognition system's status. Cues appear on the touchscreen.

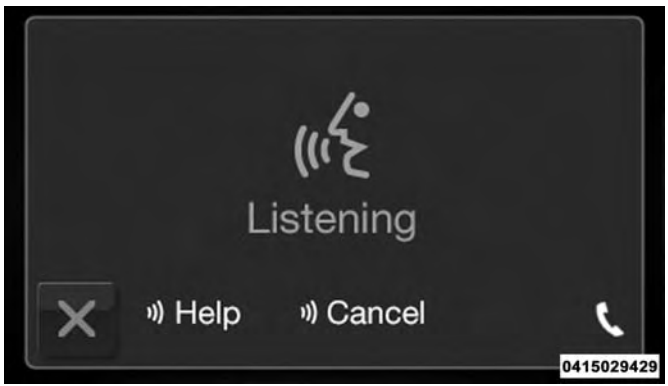

Uconnect 3/3 NAV VR

DEP
DEALER ePROCESS

Radio

Use your voice to quickly get to the AM, FM or SiriusXM Satellite Radio stations you would like to hear. (Subscription or included SiriusXM Satellite Radio trial required.)

Push the VR button . After the beep, say:

- " **Tune to** ninety-five-point-five FM"
- " **Tune to** Satellite Channel Hits 1"

TIP: At any time, if you are not sure of what to say or want to learn a Voice Command, push the VR button and say " **Help**." The system provides you with a list of commands.

Uconnect 3/3 NAV Radio

Media

Uconnect offers connections via USB, Bluetooth and Auxiliary ports (if equipped). Voice operation is only available for connected USB and iPod devices.

Push the VR button . After the beep, say one of the following commands and follow the prompts to switch your media source or choose an artist.

- " **Change source** to Bluetooth"
- " **Change source** to iPod"
- " **Change source** to USB"
- " **Play artist** Beethoven"; " **Play album** Greatest Hits"; " **Play song** Moonlight Sonata"; " **Play genre** Classical"

DEP DEALER ePROCESS

TIP: Press the "Browse" button on the touchscreen to see all of the music on your iPod or USB device. Your Voice Command must match **exactly** how the artist, album, song and genre information is displayed.

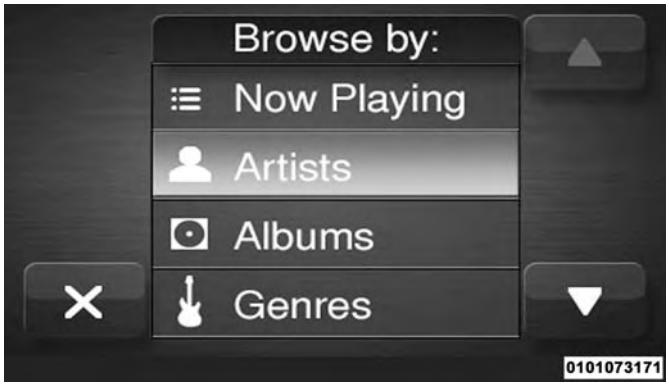

Uconnect 3/3 NAV Media

Phone

Making and answering hands-free phone calls is easy with Uconnect. When the Phonebook button is illuminated for the Uconnect 3/3 NAV radio, your system is ready. Check UconnectPhone.com for mobile phone compatibility and pairing instructions.

Push the Phone (if active) or VR button . After the beep, say one of the following commands:

- " **Call** John Smith"
- " **Dial** 123-456-7890 and follow the system prompts"
- " **Redial** (call previous outgoing phone number)"
- " **Call back** (call previous incoming phone number)"

DEP DEALER ePROCESS

TIP: When providing a Voice Command, push the Phone (if active) or VR button and say " **Call**," then pronounce the name **exactly** as it appears in your phone book. When a contact has multiple phone numbers, you can say " **Call** John Smith **work**."

Uconnect 3/3 NAV Phone

General Information

The following regulatory statement applies to all Radio Frequency (RF) devices equipped in this vehicle:

This device complies with Part 15 of the FCC Rules and with Industry Canada license-exempt RSS standard(s). Operation is subject to the following two conditions:

1. This device may not cause harmful interference, and
2. This device must accept any interference received, including interference that may cause undesired operation.

NOTE: Changes or modifications not expressly approved by the party responsible for compliance could void the user's authority to operate the equipment.

Additional Information

© 2018 FCA US LLC. All rights reserved. Mopar and Uconnect are registered trademarks and Mopar Owner Connect is a trademark of FCA US LLC. Android is a trademark of Google Inc. SiriusXM and all related marks and logos are trademarks of SiriusXM Radio Inc.

For Uconnect system support, call 1-877-855-8400 (24 hours a day 7 days a week) or visit DriveUconnect.com (U.S. Residents) or DriveUconnect.ca (Canadian Residents).

DEP DEALER ePROCESS

CD/DVD DISC MAINTENANCE

To keep a CD/DVD in good condition, take the following precautions:

- Handle the disc by its edge; avoid touching the surface.
- If the disc is stained, clean the surface with a soft cloth, wiping from center to edge.
- Do not apply paper or tape to the disc; avoid scratching the disc.
- Do not use solvents such as benzene, thinner, cleaners, or anti-static sprays.
- Store the disc in its case after playing.
- Do not expose the disc to direct sunlight.
- Do not store the disc where temperatures may become too high.

NOTE: If you experience difficulty in playing a particular disc, it may be damaged (e.g., scratched, reflective coating removed, a hair, moisture or dew on the disc), oversized, or have protection encoding. Try a known good disc before considering disc player service.

DEP
DEALER ePROCESS

CUSTOMER ASSISTANCE

CONTENTS

■ SUGGESTIONS FOR OBTAINING SERVICE FOR YOUR VEHICLE 316
- □ Prepare For The Appointment 316
- □ Prepare A List 316
- □ Be Reasonable With Requests 316

■ IF YOU NEED ASSISTANCE 316
- □ FCA US LLC Customer Center 317
- □ FCA Canada Inc. Customer Center. 317
- □ In Mexico Contact 317
- □ Puerto Rico And U.S. Virgin Islands. 317
- □ Customer Assistance For The Hearing Or Speech Impaired (TDD/TTY) 318
- □ Service Contract 318

■ WARRANTY INFORMATION 319

■ MOPAR PARTS 319

■ REPORTING SAFETY DEFECTS 319
- □ In The 50 United States And Washington, D.C. . .319
- □ In Canada 320

■ PUBLICATION ORDER FORMS 320

DEP DEALER ePROCESS

SUGGESTIONS FOR OBTAINING SERVICE FOR YOUR VEHICLE

Prepare For The Appointment

If you are having warranty work done, be sure to have the right papers with you. Take your warranty folder. All work to be performed may not be covered by the warranty. Discuss additional charges with the service manager. Keep a maintenance log of your vehicle's service history. This can often provide a clue to the current problem.

Prepare A List

Make a written list of your vehicle's problems or the specific work you want done. If you've had an accident or work done that is not on your maintenance log, let the service advisor know.

Be Reasonable With Requests

If you list a number of items and you must have your vehicle by the end of the day, discuss the situation with the service advisor and list the items in order of priority. At many authorized dealers, you may obtain a rental vehicle at a minimal daily charge. If you need a rental, it is advisable to make these arrangements when you call for an appointment.

IF YOU NEED ASSISTANCE

The manufacturer and its authorized dealer are vitally interested in your satisfaction. We want you to be happy with our products and services.

Warranty service must be done by an authorized dealer. We strongly recommend that you take the vehicle to an authorized dealer. They know your vehicle the best, and are most concerned that you get prompt and high quality service. The manufacturer's authorized dealer have the facilities, factory-trained technicians, special tools, and the latest information to ensure the vehicle is fixed correctly and in a timely manner.

This is why you should always talk to an authorized dealer service manager first. Most matters can be resolved with this process.

- If for some reason you are still not satisfied, talk to the general manager or owner of the authorized dealer. They want to know if you need assistance.
- If an authorized dealer is unable to resolve the concern, you may contact the manufacturer's customer center.

DEP
DEALER ePROCESS

Any communication to the manufacturer's customer center should include the following information:

- Owner's name and address
- Owner's telephone number (home and office)
- Authorized dealer name
- Vehicle Identification Number (VIN)
- Vehicle delivery date and mileage

FCA US LLC Customer Center

P.O. Box 21–8004

Auburn Hills, MI 48321–8004

Phone: (888) 242-6342

FCA Canada Inc. Customer Center

P.O. Box 1621

Windsor, Ontario N9A 4H6

Phone: (800) 465-2001 English / (800) 387-9983 French

In Mexico Contact

Av. Prolongacion Paseo de la Reforma, 1240

Sante Fe C.P. 05109

Mexico, D. F.

In Mexico City: 800-505-1300

Outside Mexico City: +(52)55 50817568

Puerto Rico And U.S. Virgin Islands

FCA Caribbean LLC

P.O. Box 191857

San Juan 00919-1857

Phone: (888) 242-6342

Fax: (787) 782-3345

DEP DEALER ePROCESS

Customer Assistance For The Hearing Or Speech Impaired (TDD/TTY)

To assist customers who have hearing difficulties, the manufacturer has installed special TDD (Telecommunication Devices for the Deaf) equipment at its customer center. Any hearing or speech impaired customer, who has access to a TDD or a conventional teletypewriter (TTY) in the United States, can communicate with the manufacturer by dialing 1-800-380-CHRY.

Canadian residents with hearing difficulties that require assistance can use the special needs relay service offered by Bell Canada. For TTY teletypewriter users, dial 711 and for Voice callers, dial 1-800-855-0511 to connect with a Bell Relay Service operator.

Service Contract

You may have purchased a service contract for a vehicle to help protect you from the high cost of unexpected repairs after the manufacturer's New Vehicle Limited Warranty expires. The manufacturer stands behind only the manufacturer's service contracts. If you purchased a manufacturer's service contract, you will receive Plan Provisions and an Owner Identification Card in the mail within three weeks of the vehicle delivery date. If you have any questions about the service contract, call the manufacturer's Service Contract National Customer Hotline at 1-800-521-9922 (Canadian residents, call (800) 465-2001 English / (800) 387-9983 French).

The manufacturer will not stand behind any service contract that is not the manufacturer's service contract. It is not responsible for any service contract other than the manufacturer's service contract. If you purchased a service contract that is not a manufacturer's service contract, and you require service after the manufacturer's New Vehicle Limited Warranty expires, please refer to the contract documents, and contact the person listed in those documents.

We appreciate that you have made a major investment when you purchased the vehicle. An authorized dealer has also made a major investment in facilities, tools, and training to assure that you are absolutely delighted with the ownership experience. You will be pleased with their sincere efforts to resolve any warranty issues or related concerns.

DEP
DEALER ePROCESS

WARNING!

Engine exhaust (internal combustion engines only), some of its constituents, and certain vehicle components contain, or emit, chemicals known to the State of California to cause cancer and birth defects, or other reproductive harm. In addition, certain fluids contained in vehicles and certain products of component wear contain, or emit, chemicals known to the State of California to cause cancer and birth defects, or other reproductive harm.

WARRANTY INFORMATION

See the Warranty Information Booklet for the terms and provisions of FCA US LLC warranties applicable to this vehicle and market.

MOPAR PARTS

Mopar fluids, lubricants, parts, and accessories are available from an authorized dealer. They are recommended for your vehicle in order to help keep the vehicle operating at its best.

REPORTING SAFETY DEFECTS

In The 50 United States And Washington, D.C.

If you believe that your vehicle has a defect that could cause a crash or cause injury or death, you should immediately inform the National Highway Traffic Safety Administration (NHTSA) in addition to notifying FCA US LLC.

If NHTSA receives similar complaints, it may open an investigation, and if it finds that a safety defect exists in a group of vehicles, it may order a recall and remedy campaign. However, NHTSA cannot become involved in individual problems between you, an authorized dealer or FCA US LLC.

To contact NHTSA, you may call the Vehicle Safety Hotline toll free at 1-888-327-4236 (TTY: 1-800-424-9153); or go to http://www.safercar.gov; or write to: Administrator, NHTSA, 1200 New Jersey Avenue, SE., West Building, Washington, D.C. 20590. You can also obtain other information about motor vehicle safety from http://www.safercar.gov.

DEP DEALER ePROCESS

In Canada

If you believe that your vehicle has a safety defect, you should contact the Customer Service Department immediately. Canadian customers who wish to report a safety defect to the Canadian government should contact Transport Canada, Motor Vehicle Defect Investigations and Recalls at 1-800-333-0510 or go to http://www.tc.gc.ca/roadsafety/.

PUBLICATION ORDER FORMS

To order the following manuals, you may use either the website or the phone numbers listed below. Visa, Mastercard, American Express, and Discover orders are accepted.

Service Manuals

These comprehensive Service Manuals provide the information that students and professional technicians need in diagnosing/troubleshooting, problem solving, maintaining, servicing, and repairing FCA US LLC vehicles. A complete working knowledge of the vehicle, system, and/or components is written in straightforward language with illustrations, diagrams, and charts.

Diagnostic Procedure Manuals

Diagnostic Procedure Manuals are filled with diagrams, charts and detailed illustrations. These practical manuals make it easy for students and technicians to find and fix problems on computer-controlled vehicle systems and features. They show exactly how to find and correct problems the first time, using step-by-step troubleshooting and drivability procedures, proven diagnostic tests and a complete list of all tools and equipment.

Owner's Manuals

These Owner's Manuals have been prepared with the assistance of service and engineering specialists to acquaint you with specific FCA US LLC vehicles. Included are starting, operating, emergency and maintenance procedures as well as specifications, capabilities and safety tips.

Call toll free at:

- **1-800-890-4038 (U.S.)**
- **1-800-387-1143 (Canada)**

Or

Visit us on the Worldwide Web at:

- www.techauthority.com (U.S.)

DEP DEALER ePROCESS

INDEX

DEALER ePROCESS

About Your Brakes 285
Adding Engine Coolant (Antifreeze) 250
Adding Fuel 186
Adding Washing Fluid 236
Additives, Fuel 287
Air Bag
  Air Bag Operation 127
  Air Bag Warning Light 124
  Driver Knee Air Bag 128
  Enhanced Accident Response 133, 228
  Event Data Recorder (EDR) 228
  If Deployment Occurs 132
  Knee Impact Bolsters 127
  Maintaining Your Air Bag System 136
  Maintenance 136
  Side Air Bags 128
  Transporting Pets 153
Air Bag Light 84, 124, 155
Air Cleaner, Engine (Engine Air Cleaner Filter). 240
Air Conditioner Maintenance 240
Air Conditioner Refrigerant 240, 241
Air Conditioner System 240
Air Conditioning Filter 55, 242
Air Conditioning, Operating Tips 54
Air Conditioning Refrigerant 241
Air Filter 240
Air Pressure
  Tires 264
Alarm
  Security Alarm 22
Alarm System
  Security Alarm 22
Alterations/Modifications, Vehicle 5
Antifreeze (Engine Coolant) 249, 290
  Capacities 290
  Disposal 251
Anti-Lock Brake System (ABS) 100
Anti-Lock Warning Light 88, 93
Arming System
  Security Alarm 22
Audio Systems (Radio). 296
Automatic Dimming Mirror 34, 35
Automatic Oil Change Indicator 231
Automatic Transmission 168, 254
  Adding Fluid 255
  Autostick 174
  Fluid And Filter Change 255
  Fluid Change 255
  Fluid Level Check 255
  Fluid Type 254, 293

DEP
DEALER ePROCESS

Special Additives 254
Autostick 174

Battery 85, 237
Charging System Light 85
Jump Starting 220
Belts, Seat 155
Body Mechanism Lubrication 244
B-Pillar Location 259
Brake Assist System 101
Brake Fluid 291, 293
Brake, Parking. 164
Brake System 252, 285
Anti-Lock (ABS) 100, 285
Fluid Check 253
Master Cylinder 253
Parking 164
Warning Light 84
Brake/Transmission Interlock 169
Bulb Replacement 197
Bulbs, Light 157, 197

Camera, Rear 185
Capacities, Antifreeze (Engine Coolant) 290
Capacities, Fluid 290
Caps, Filler
Fuel 186
Oil (Engine) 231, 239
Radiator (Coolant Pressure) 251
Carbon Monoxide Warning 154, 290
Car Washes. 278
Cellular Phone 308
Certification Label 188
Chains, Tire 274
Change Oil Indicator 82, 231
Changing A Flat Tire 255
Check Engine Light (Malfunction Indicator Light) 96
Checking Your Vehicle For Safety 154
Checks, Safety 154
Child Restraint 137
Child Restraints
Booster Seats 141
Child Seat Installation 151
How To Stow An unused ALR Seat Belt 147
Infant And Child Restraints 140
Lower Anchors And Tethers For Children 143
Older Children And Child Restraints 140
Seating Positions 142
Clean Air Gasoline 287

DEP
DEALER ePROCESS

Cleaning
Wheels 273
Climate Control 44
Automatic 48, 53
Manual 44
Compact Disc (CD) Maintenance. 314
Compact Spare Tire 271
Contract, Service 318
Convertible Top Maintenance 279
Coolant (Antifreeze) 290, 291
Cooling Pressure Cap (Radiator Cap) 251
Cooling System 248
Adding Coolant (Antifreeze) 250
Coolant Capacity 291
Coolant Level 248, 251
Disposal Of Used Coolant 251
Drain, Flush, And Refill 249
Inspection 251
Points To Remember 252
Pressure Cap 251
Radiator Cap 251
Selection Of Coolant (Antifreeze) 249
Corrosion Protection 277
Cruise Control (Speed Control) 178
Cruise Light 94
Cupholders 66
Customer Assistance 316
Customer Programmable Features. 297
Cybersecurity 296

Daytime Running Lights. 37, 38
Dealer Service 238
Defroster, Windshield. 155
Diagnostic System, Onboard. 95
Dimmer Switch
Headlight 37
Dipsticks
Oil (Engine) 236
Disposal
Antifreeze (Engine Coolant) 251
Door Ajar 86, 87
Door Ajar Light 86, 87
Doors. 24
Driver's Seat Back Tilt 26
Driving
Through Flowing, Rising, Or Shallow Standing Water 191

Electrical Power Outlets. 68
Electric Remote Mirrors 36

DEP
DEALER ePROCESS

Electronic Brake Control System 101
Electronic Stability Control (ESC) 103
Electronic Throttle Control Warning Light 86
Emergency, In Case Of
Hazard Warning Flasher 197
Jacking 255
Jump Starting 220
Towing 226
Emission Control System Maintenance 96
Engine
Air Cleaner 240
Break-In Recommendations 163
Checking Oil Level 236
Compartment 235
Cooling 248
Exhaust Gas Caution 154, 290
Fails To Start 162
Flooded, Starting 162
Fuel Requirements 287, 291
Oil 238, 290
Oil Filler Cap 239
Oil Filter 240
Oil Selection 238, 291
Oil Synthetic 239
Overheating 224
Starting 161
Enhanced Accident Response Feature 133, 228
Ethanol. 288
Exhaust Gas Cautions 154, 290
Exhaust System 154, 247
Exterior Lighting. 37
Exterior Lights. 37, 157, 197

Filters
Air Cleaner 240
Air Conditioning 55, 242
Engine Fuel 291
Engine Oil 240
Engine Oil Disposal 239
Flashers
Turn Signals 37, 94, 157
Flash-To-Pass 37
Flooded Engine Starting. 162
Fluid, Brake 293
Fluid Capacities. 290
Fluid Leaks. 157
Fluid Level Checks
Brake 253
Engine Oil 236
Fluids. 291

DEP
DEALER ePROCESS

Fluids And Lubricants 291
Fog Lights 37, 39
Fold-Flat Seats 26
Freeing A Stuck Vehicle 224
Fuel 287
  Adding 186
  Additives 287
  Capacity 290
  Clean Air 287
  Ethanol 288
  Filler Cap (Gas Cap) 186
  Gasoline 287
  Gauge 89
  Materials Added 287
  Methanol 288
  Octane Rating 287
  Requirements 287
  Specifications 291
  Tank Capacity 290
Fueling 186
Fuses 200

Gas Cap (Fuel Filler Cap) 186, 187
Gasoline, Clean Air 287
Gasoline (Fuel) 287, 290
Gasoline, Reformulated 287
Gauges
  Fuel 89
Gear Ranges 170
Gear Select Lever Override 223
General Information 112, 308
Glass Cleaning 282
GVWR 188

Hazard
  Driving Through Flowing, Rising, Or Shallow Standing Water 191
Headlights 37, 38
  Cleaning 278
  High Beam/Low Beam Select Switch 37
  Lights On Reminder 37
  Passing 37, 38
  Switch 37, 38
  Time Delay 37
Head Restraints 31
Heated Mirrors 34, 37
Heated Seats 29
Hill Start Assist 102
Hood Prop 63
Hood Release 63

DEP
DEALER ePROCESS

Ignition 19
Switch 19
Immobilizer (Sentry Key) 21
Instrument Cluster
Descriptions 94
Display 79
Instrument Cluster 72
Instrument Panel Lens Cleaning 282
Interior Appearance Care 281
Interior Lighting 40
Introduction 4
iPod/USB/MP3 Control 308

Jack Operation 255
Jump Starting 220

Key Fob
Programming Additional Key Fobs 18, 21
Key Fob Programming (Remote Keyless Entry) 18
Key-In Reminder 21
Keys 16
Replacement 21
Sentry (Immobilizer) 21

Lane Change And Turn Signals 37
Lane Change Assist 37, 40
Lap/Shoulder Belts 116
Latches 157
Hood 63
Lead Free Gasoline 287
Leaks, Fluid 157
Life Of Tires 267
Liftgate 65
Liftgate (Sedan) 65
Light Bulbs 157, 197
Lights 38, 157
Air Bag 84, 124, 155
Brake Assist Warning 105
Brake Warning 84
Bulb Replacement 197
Cruise 94
Daytime Running 37
Dimmer Switch, Headlight 37
Engine Temperature Warning 86
Exterior 157
Headlights 37
High Beam 38
High Beam/Low Beam Select 37
Instrument Cluster 37
Lights On Reminder 37

DEP
DEALER ePROCESS

Malfunction Indicator (Check Engine) 89
Park 39, 94
Passing 37, 38
Seat Belt Reminder 87
Security Alarm 22
Service 197
Traction Control 105
Turn Signal 40
Turn Signals 37, 94, 157
Warning (Instrument Cluster Description) 86
Warning Instrument Cluster Descriptions 94
Loading Vehicle. 188
Tires 259
Locks
Power Door 25
Lubrication, Body 244
Lug Nuts/Bolts. 285

Maintenance Free Battery 237
Maintenance Schedule 231
Maintenance Schedules 231
Malfunction Indicator Light (Check Engine) 89, 96
Manual, Service. 320
Manual Transmission 165, 254
Fluid Level Check 254
Frequency Of Fluid Change 254
Lubricant Selection 254, 293
Memory Seat 29
Methanol 288
Mirrors 34
Automatic Dimming 34, 35
Electric Powered 36
Heated 34, 37
Outside 34
Rearview 34
Modifications/Alterations, Vehicle 5
Monitor, Tire Pressure System. 106
Mopar Parts 319
MP3 Control 308
Multi-Function Control Lever 37, 38

New Vehicle Break-In Period 163

Occupant Restraints. 113
Octane Rating, Gasoline (Fuel) 287
Oil Change Indicator. 82
Oil Change Indicator, Reset 82
Oil, Engine 238, 290, 291
Capacity 290, 291
Change Interval 238

DEP
DEALER ePROCESS

Checking 236
Dipstick 236
Disposal 239
Filter 240
Filter Disposal 239
Identification Logo 238
Materials Added To 239
Pressure Warning Light 87
Recommendation 238, 290
Synthetic 239
Viscosity 239
Oil Filter, Change 240
Oil Filter, Selection. 240
Oil Pressure Light 87
Onboard Diagnostic System 95
Operating Precautions 95
Operator Manual (Owner's Manual) 5
Outlet
Power 68
Outside Rearview Mirrors 34
Overheating, Engine 224
Owner's Manual (Operator Manual) 5, 320

Paint Care. 277
Parking Brake 164
Passing Light 38
Pets 153
Placard, Tire And Loading Information 259
Power
Brakes 285
Door Locks 25
Mirrors 36
Outlet (Auxiliary Electrical Outlet) 68
Steering 177
Sunroof 57
Pregnant Women And Seat Belts 120
Pretensioners
Seat Belts 121

Radial Ply Tires 265
Radiator Cap (Coolant Pressure Cap). 251
Radio Frequency
General Information 19, 22
Radio Operation 308
Rear Camera 185
Rear Liftgate (Sedan) 65
Recreational Towing. 190
Reformulated Gasoline. 287
Refrigerant 241
Release, Hood. 63

DEP
DEALER ePROCESS

Reminder, Lights On 37
Reminder, Seat Belt 114
Remote Keyless Entry
  Power Convertible Top Function 17
  Programming Additional Key Fobs 18, 21
Replacement Bulbs 197
Replacement Keys 21
Replacement Tires 268
Reporting Safety Defects 319
Restraints, Child 137
Restraints, Head 31
Rotation, Tires 275

Safety Checks Inside Vehicle 155
Safety Checks Outside Vehicle 157
Safety Defects, Reporting 319
Safety, Exhaust Gas 154
Safety Information, Tire 256
Safety Tips 154
Schedule, Maintenance 231
Seat Belt
  Lap/Shoulder Belt Operation 118
Seat Belt Maintenance 281
Seat Belt Reminder 87
Seat Belts 114, 155
  Child Restraints 137
  Energy Management Feature 121
  Extender 119
  Front Seat 114, 116, 118
  Inspection 155
  Lap/Shoulder Belts 116
  Lap/Shoulder Belt Untwisting 119
  Operating Instructions 118
  Pregnant Women 120
  Pretensioners 121
  Rear Seat 116
  Reminder 114
  Seat Belt Extender 119
  Seat Belt Pretensioner 121
  Untwisting Procedure 119
Seats 26
  Adjustment 26
  Heated 29
  Rear Folding 26
  Tilting 26
Security Alarm 22
Sentry Key
  Key Programming 21
Sentry Key (Immobilizer) 21
Service Assistance 316

DEP
DEALER ePROCESS

Service Contract 318
Service Manuals 320
Settings
  Personal 297
Shift Lever Override 223
Shift Speeds, Manual Transmission 167
Shoulder Belts 116
Side View Mirror Adjustment 34
Signals, Turn 37, 40, 94, 157
Snow Chains (Tire Chains) 274
Snow Tires 270
Spare Tires 270, 271, 272
Spark Plugs 291
Speed Control
  Cancel 180
Speed Control (Cruise Control) 178
Sport Mode 176
Starting 161
  Automatic Transmission 161
  Button 19
  Cold Weather 161
  Engine Fails To Start 162
  Manual Transmission 161
Steering
  Power 177
  Tilt Column 34
  Wheel, Heated 34
  Wheel, Tilt 34
Steering Wheel Audio Controls 307
Storage 66, 277
Storing Your Vehicle 55
Stuck, Freeing 224
Sun Roof 57
Synthetic Engine Oil 239

Telescoping Steering Column 34
Temperature Control, Automatic (ATC) 53
Tilt Steering Column 34
Time Delay
  Headlight 37
Tire And Loading Information Placard 259
Tire Markings 256
Tires 157, 263, 270, 276
  Aging (Life Of Tires) 267
  Air Pressure 263
  Chains 274
  Changing 255
  Compact Spare 271
  General Information 263, 270
  High Speed 265

DEP
DEALER ePROCESS

Inflation Pressure 264
Jacking 255
Life Of Tires 267
Load Capacity 259, 260
Pressure Monitoring System (TPMS) 91
Pressure Monitor System (TPMS) 106
Quality Grading 276
Radial 265
Replacement 268
Rotation 275
Safety 256, 263
Snow Tires 270
Spare Tires 270, 272
Spinning 266
Tread Wear Indicators 266
Wheel Nut Torque 285
Tire Safety Information. 256
Tire Service Kit 204, 205, 206, 208, 210, 211, 212, 213, 214, 216, 218, 219
To Open Hood 63
Towing 189
Disabled Vehicle 226
Recreational 190
Towing Behind A Motorhome 190
Traction 191
Traction Control 101
Trailer Towing. 189
Transmission
Automatic 168, 254
Manual 165
Transporting Pets 153
Tread Wear Indicators 266
Turn Signals 37, 40, 94

Uconnect
Uconnect Settings 297
Uniform Tire Quality Grades 276
Unleaded Gasoline 287
Untwisting Procedure, Seat Belt 119
USB 308

Vehicle Identification Number (VIN) 284
Vehicle Loading 188, 260
Vehicle Modifications/Alterations. 5
Vehicle Security Alarm. 22
Vehicle Storage. 55, 277
Voice Recognition System (VR) 309

Warning Lights (Instrument Cluster Descriptions) 88
Warnings And Cautions 5

DEP
DEALER ePROCESS

Warranty Information 319
Washer
Adding Fluid 236
Washers, Windshield 42, 43
Washing Vehicle 278
Water
Driving Through 191
Wheel And Wheel Tire Care 273
Wheel And Wheel Tire Trim 273
Wind Buffeting 57, 58
Window Fogging 55
Windows 56
Windshield Defroster 155
Windshield Washers 42, 43
Windshield Wiper Blades 245
Windshield Wipers 42
Wipers Blade Replacement 245

DEP
DEALER ePROCESS

DEP
DEALER ePROCESS

INSTALLATION OF RADIO TRANSMITTING EQUIPMENT

Special design considerations are incorporated into this vehicle's electronic system to provide immunity to radio frequency signals. Mobile two-way radios and telephone equipment must be installed properly by trained personnel. The following must be observed during installation.

The positive power connection should be made directly to the battery and fused as close to the battery as possible. The negative power connection should be made to body sheet metal adjacent to the negative battery connection. This connection should not be fused.

Antennas for two-way radios should be mounted on the roof or the rear area of the vehicle. Care should be used in mounting antennas with magnet bases. Magnets may affect the accuracy or operation of the compass on vehicles so equipped.

The antenna cable should be as short as practical and routed away from the vehicle wiring when possible. Use only fully shielded coaxial cable.

Carefully match the antenna and cable to the radio to ensure a low Standing Wave Ratio (SWR).

Mobile radio equipment with output power greater than normal may require special precautions.

All installations should be checked for possible interference between the communications equipment and the vehicle's electronic systems.

⚠WARNING:

Operating, servicing and maintaining a passenger vehicle or off-road highway motor vehicle can expose you to chemicals including engine exhaust, carbon monoxide, phthalates, and lead, which are known to the State of California to cause cancer and birth defects or other reproductive harm. To minimize exposure, avoid breathing exhaust, do not idle the engine except as necessary, service your vehicle in a well-ventilated area and wear gloves or wash your hands frequently when servicing your vehicle. For more information go to www.P65Warnings.ca.gov/passenger-vehicle.

DEP
DEALER ePROCESS

18FF-126-AC
©2018 FCA US LLC. All Rights Reserved.
FIAT is a registered trademark of FCA Group
Marketing S.p.A., used under license by FCA US LLC.

Third Edition
Printed in U.S.A.