2011 ALTIMA

OWNER'S MANUAL

For your safety, read carefully and keep in this vehicle.

FOREWORD

Welcome to the growing family of new NISSAN owners. This vehicle is delivered to you with confidence. It was produced using the latest techniques and strict quality control.

This manual was prepared to help you understand the operation and maintenance of your vehicle so that you may enjoy many miles (kilometers) of driving pleasure. Please read through this manual before operating your vehicle.

A separate Warranty Information Booklet explains details about the warranties covering your vehicle. The "NISSAN Service and Maintenance Guide" explains details about maintaining and servicing your vehicle. Additionally, a separate Customer Care/Lemon Law Booklet (U.S. only) will explain how to resolve any concerns you may have with your vehicle, as well as clarify your rights under your state's lemon law.

Your NISSAN dealership knows your vehicle best. When you require any service or have any questions, they will be glad to assist you with the extensive resources available to them.

READ FIRST—THEN DRIVE SAFELY

Before driving your vehicle, please read this Owner's Manual carefully. This will ensure familiarity with controls and maintenance requirements, assisting you in the safe operation of your vehicle.

⚠ WARNING

IMPORTANT SAFETY INFORMATION REMINDERS FOR SAFETY!

Follow these important driving rules to help ensure a safe and comfortable trip for you and your passengers!

- **NEVER drive under the influence of alcohol or drugs.**
- **ALWAYS observe posted speed limits and never drive too fast for conditions.**
- **ALWAYS give your full attention to driving and avoid using vehicle features or taking other actions that could distract you.**
- **ALWAYS use your seat belts and appropriate child restraint systems. Preteen children should be seated in the rear seat.**
- **ALWAYS provide information about the proper use of vehicle safety features to all occupants of the vehicle.**
- **ALWAYS review this Owner's Manual for important safety information.**

MODIFICATION OF YOUR VEHICLE

This vehicle should not be modified. Modification could affect its performance, safety or durability, and may even violate governmental regulations. In addition, damage or performance problems resulting from modifications may not be covered under NISSAN warranties.

This manual includes information for all options available on this model. Therefore, you may find some information that does not apply to your vehicle.

All information, specifications and illustrations in this manual are those in effect at the time of printing. NISSAN reserves the right to change specifications or design without notice and without obligation.

IMPORTANT INFORMATION ABOUT THIS MANUAL

You will see various symbols in this manual. They are used in the following ways:

⚠ WARNING

This is used to indicate the presence of a hazard that could cause death or serious personal injury. To avoid or reduce the risk, the procedures must be followed precisely.

⚠ CAUTION

This is used to indicate the presence of a hazard that could cause minor or moderate personal injury or damage to your vehicle. To avoid or reduce the risk, the procedures must be followed carefully.

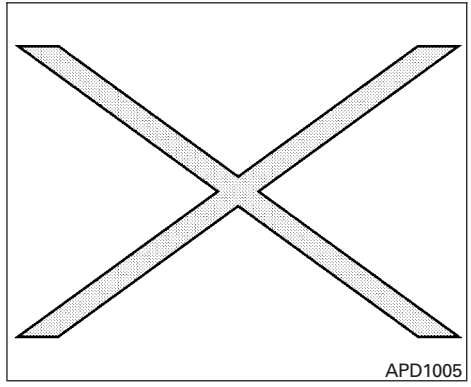

If you see this symbol, it means **"Do not do this"** or **"Do not let this happen."**

If you see a symbol similar to these in an illustration, it means the arrow points to the front of the vehicle.

Arrows in an illustration that are similar to these indicate movement or action.

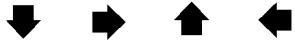

Arrows in an illustration that are similar to these call attention to an item in the illustration.

CALIFORNIA PROPOSITION 65 WARNING

⚠ WARNING

Engine exhaust, some of its constituents, and certain vehicle components contain or emit chemicals known to the State of California to cause cancer and birth defects or other reproductive harm. In addition, certain fluids contained in vehicles and certain products of component wear contain or emit chemicals known to the State of California to cause cancer and birth defects or other reproductive harm.

CALIFORNIA PERCHLORATE ADVISORY

Some vehicle parts, such as lithium batteries, may contain perchlorate material. The following advisory is provided: "Perchlorate Material – special handling may apply, See www.dtsc.ca.gov/hazardouswaste/perchlorate."

BLUETOOTH® is a trademark owned by Bluetooth SIG, Inc., U.S.A. and licensed to Visteon and Clarion.

XM Radio® requires subscription, sold separately. Not available in Alaska, Hawaii or Guam. For more information, visit www.xmradio-.com.

© 2010 NISSAN NORTH AMERICA, INC.

All rights reserved. No part of this Owner's Manual may be reproduced or stored in a retrieval system, or transmitted in any form, or by any means, electronic, mechanical, photocopying, recording or otherwise, without the prior written permission of Nissan North America, Inc.

NISSAN CUSTOMER CARE PROGRAM

NISSAN CARES . . .

Both NISSAN and your NISSAN dealer are dedicated to serving all your automotive needs. Your satisfaction with your vehicle and your NISSAN dealer are our primary concerns. Your NISSAN dealer is always available to assist you with all your automobile sales and service needs.

However, if there is something that your NISSAN dealer cannot assist you with or you would like to provide NISSAN directly with comments or questions, please contact the NISSAN Consumer Affairs Department using our toll-free number:

For U.S. customers
1-800-NISSAN-1
(1-800-647-7261)

For Canadian customers
1-800-387-0122

The Consumer Affairs Department will ask for the following information:

- Your name, address, and telephone number
- Vehicle identification number (attached to the top of the instrument panel on the driver's side)
- Date of purchase
- Current odometer reading
- Your NISSAN dealer's name
- Your comments or questions

OR

You can write to NISSAN with the information at:

For U.S. customers
Nissan North America, Inc.
Consumer Affairs Department
P.O. Box 685003
Franklin, TN 37068-5003

For Canadian customers
Nissan Canada Inc.
5290 Orbitor Drive
Mississauga, Ontario L4W 4Z5

or via e-mail at:

For U.S. customers
nnaconsumeraffairs@nissan-usa.com

For Canadian customers
information.centre@nissancanada.com

We appreciate your interest in NISSAN and thank you for buying a quality NISSAN vehicle.

Table of Contents

Illustrated table of contents	0
Safety—Seats, seat belts and supplemental restraint system	1
Instruments and controls	2
Pre-driving checks and adjustments	3
Monitor, climate, audio, phone and voice recognition systems	4
Starting and driving	5
In case of emergency	6
Appearance and care	7
Maintenance and do-it-yourself	8
Technical and consumer information	9
Index	10

0 Illustrated table of contents

Air bags, seat belts and child restraints 0-2
Exterior front 0-3
Exterior rear. 0-5
Passenger compartment 0-7
Instrument panel. 0-8
Engine compartment check locations 0-10
Warning/indicator lights 0-12

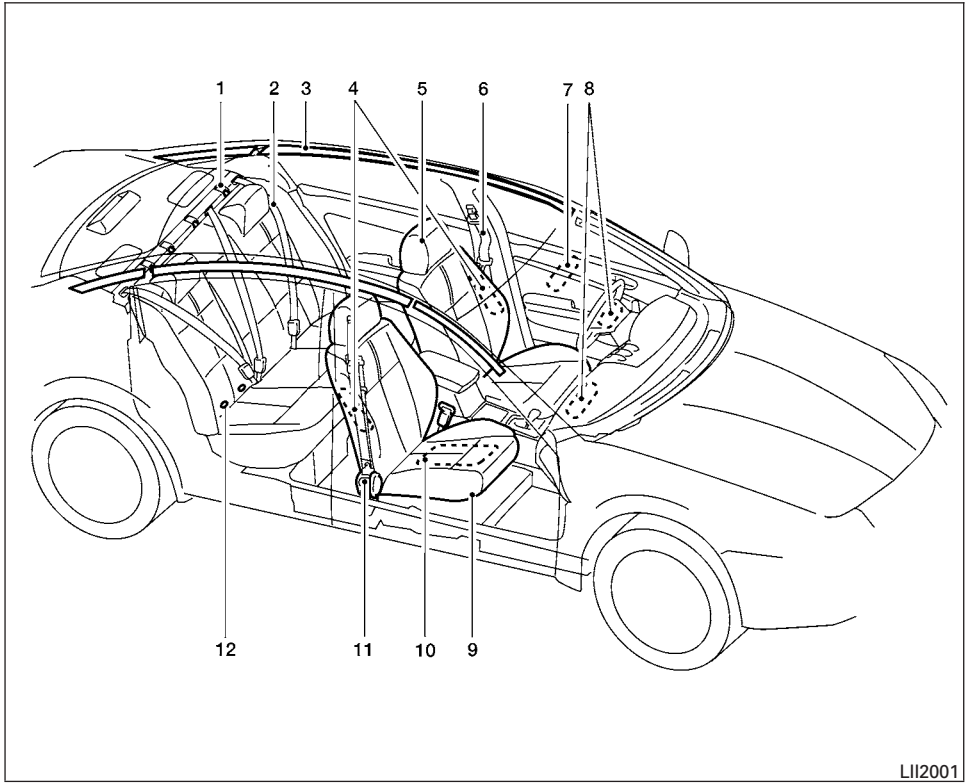

1. Top tether strap anchor (P. 1-27)
2. Rear seat belts (P. 1-14)
3. Roof-mounted curtain side-impact supplemental air bag (P. 1-41)
4. Front seat-mounted side-impact supplemental air bag (P. 1-41)
5. Head Restraints (P. 1-10)
6. Front seat belts (P. 1-14)
7. Side-impact air bag pressure sensor (driver's side shown; passenger's side similar) (P. 1-57)
8. Supplemental front-impact air bags (P. 1-41)
9. Seats (P. 1-2)
10. Occupant classification sensor (pattern sensor) (P. 1-50)
11. Seat belt with pretensioner (P. 1-55)
12. LATCH (Lower Anchors and Tethers for CHildren) system (P. 1-25)

See the page number indicated in parentheses for operating details.

EXTERIOR FRONT

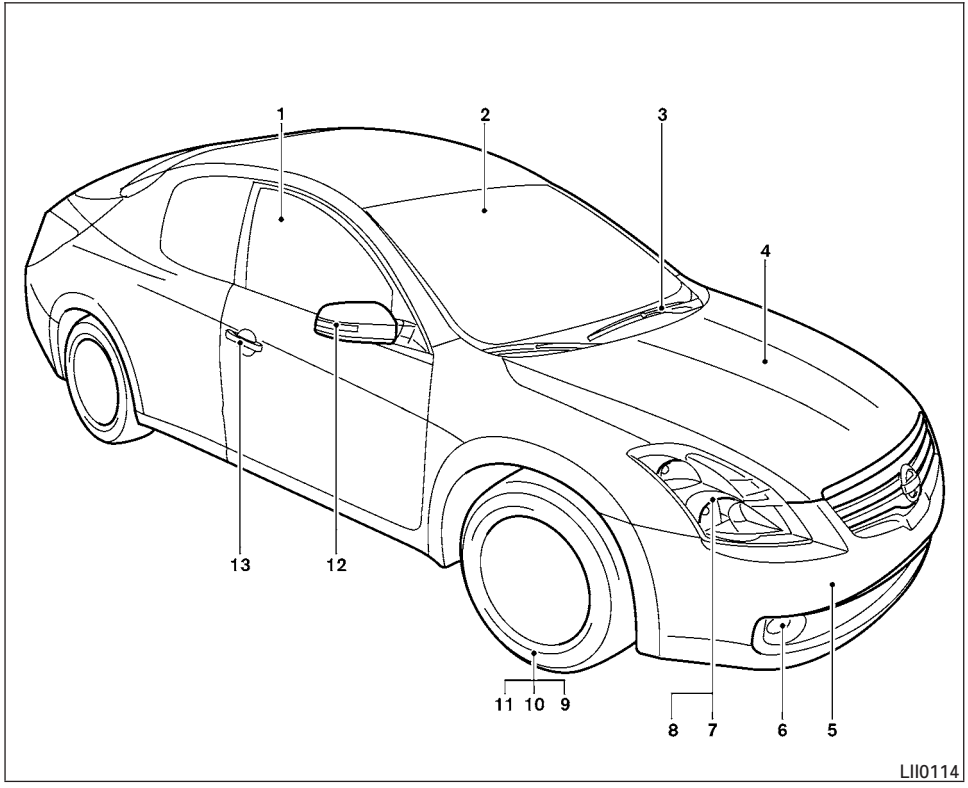

Coupe

1. Power windows (P. 2-43)
2. Windshield (P. 8-21)
3. Windshield wiper and washer switch (P. 2-28)
4. Engine hood (P. 3-23)
5. Tie down (P. 6-14)
6. Fog light switch (if so equipped) (P. 2-34)
7. Headlight and turn signal switch (P. 2-29)
8. Replacing bulbs (P. 8-28)
9. Tire pressure (P. 8-38)
10. Flat tire (P. 6-2)
11. Tire chains (P. 8-46)
12. Mirrors (P. 3-29)
13. Door locks, NISSAN Intelligent Key ™ , keys (P. 3-4, 3-6, 3-2)

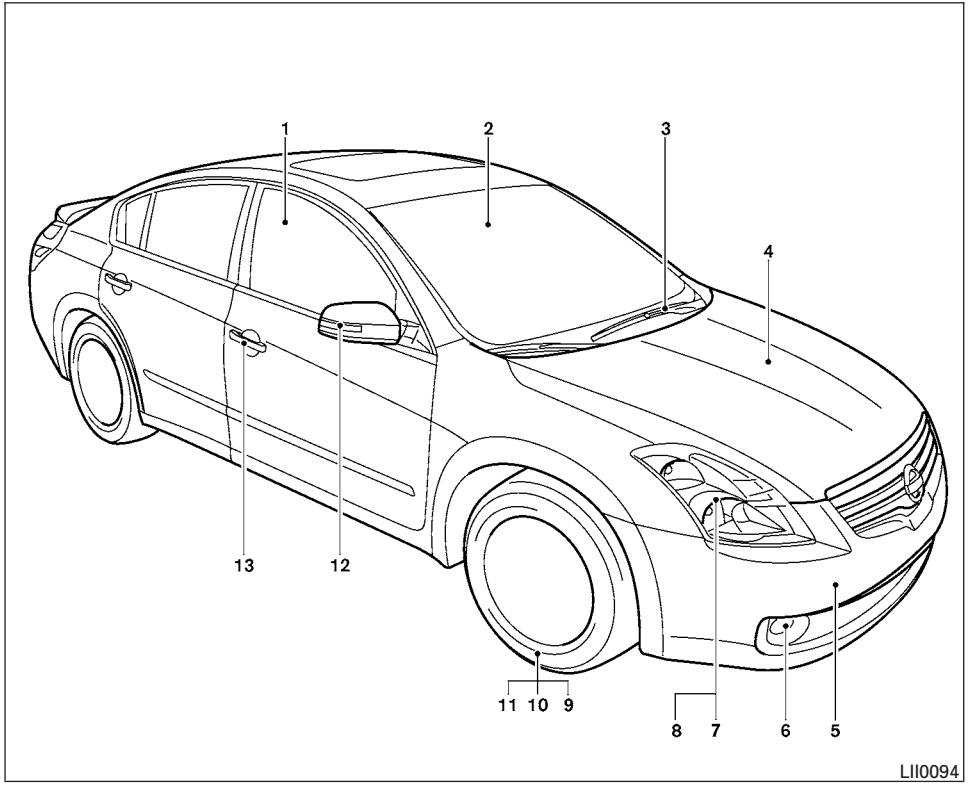

Sedan

1. Power windows (P. 2-43)
2. Windshield (P. 8-21)
3. Windshield wiper and washer switch (P. 2-28)
4. Engine hood (P. 3-23)
5. Tie down (P. 6-14)
6. Fog light switch (if so equipped) (P. 2-34)
7. Headlight and turn signal switch (P. 2-29)
8. Replacing bulbs (P. 8-28)
9. Tire pressure (P. 8-38)
10. Flat tire (P. 6-2)
11. Tire chains (P. 8-46)
12. Mirrors (P. 3-29)
13. Door locks, NISSAN Intelligent Key ™ , keys (P. 3-4, 3-6, 3-2)

See the page number indicated in parentheses for operating details.

EXTERIOR REAR

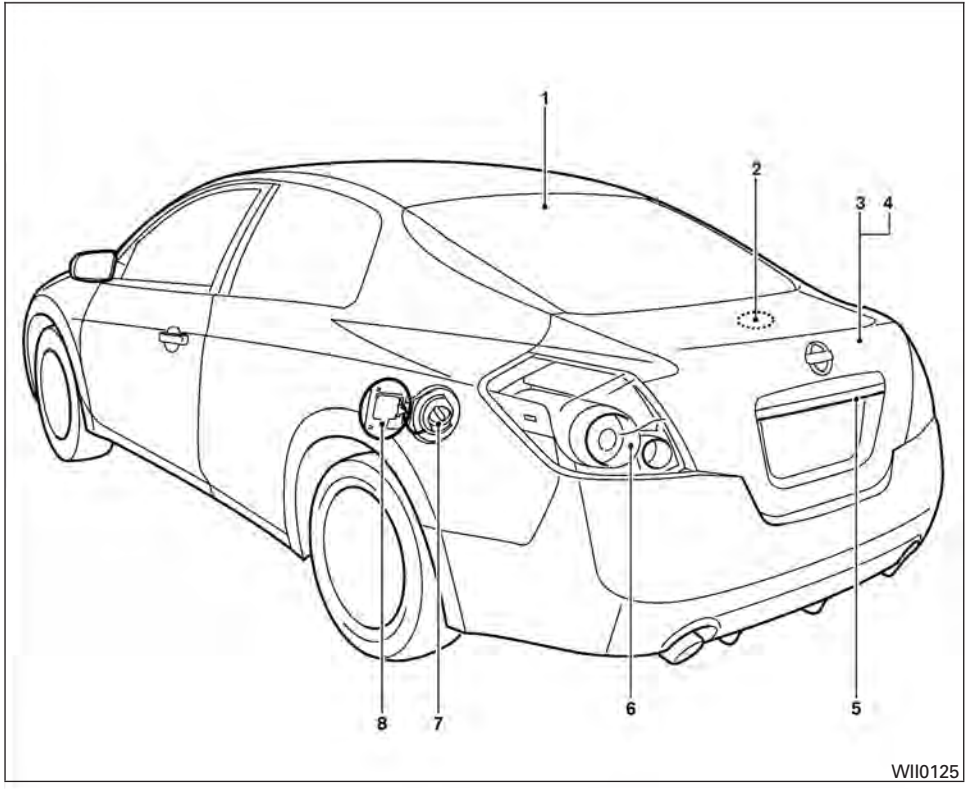

Coupe

1. Rear window and outside mirror (if so equipped) defroster switch (P. 2-29)
2. Interior trunk lid release (P. 3-24)
3. Trunk lid (P. 3-23)
4. Vehicle loading (P. 9-13)
5. Opener operation (P. 3-23)
6. Replacing bulbs (P. 8-28)
7. Fuel-filler cap, fuel recommendation (P. 3-25, P. 9-3)
8. Fuel-filler door (P. 3-25)

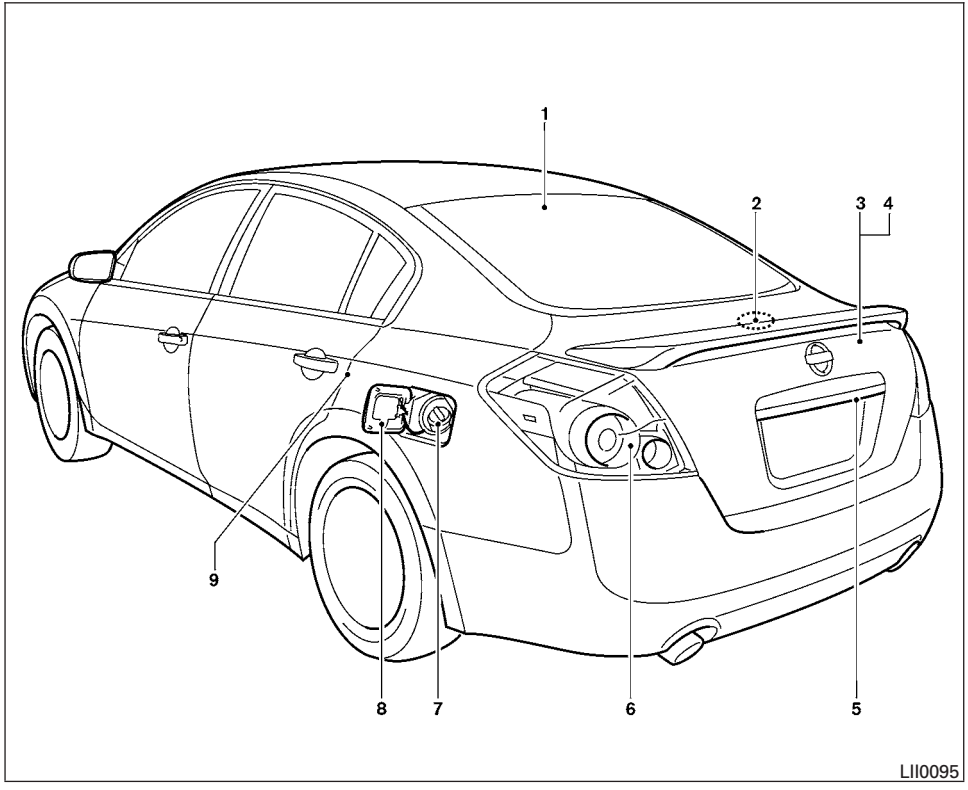

Sedan

1. Rear window and outside mirror (if so equipped) defroster switch (P. 2-29)
2. Interior trunk lid release (P. 3-24)
3. Trunk lid (P. 3-23)
4. Vehicle loading (P. 9-13)
5. Opener operation (P. 3-23)
6. Replacing bulbs (P. 8-28)
7. Fuel-filler cap, fuel recommendation (P. 3-25, P. 9-3)
8. Fuel-filler door (P. 3-25)
9. Child safety rear door lock (P. 3-6)

PASSENGER COMPARTMENT

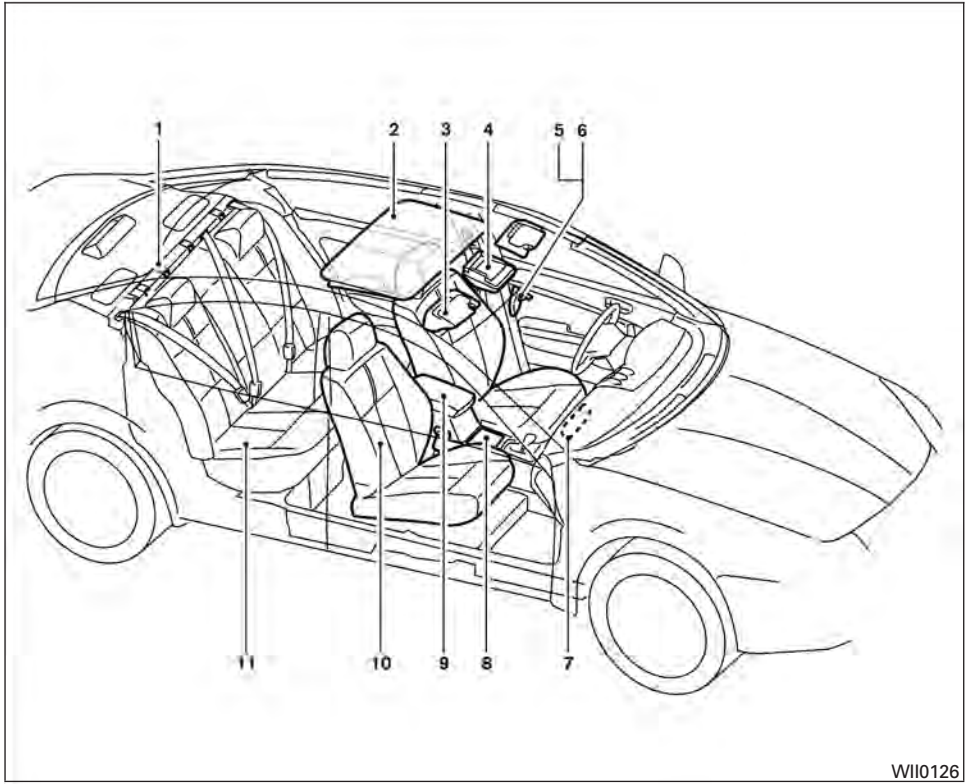

1. Interior trunk access (P. 1-8)
2. Moonroof (if so equipped) (P. 2-46)
3. Sun visors (P. 3-28)
4. Interior lights, illuminated entry (P. 2-49)
5. HomeLink® universal transceiver (if so equipped) (P. 2-51)
6. Automatic anti-glare rearview mirror (if so equipped) (P. 3-29)
7. Glove box (P. 2-41)
8. Front cup holders (P. 2-40)
9. Front console (P. 2-41)
10. Front seat (P. 1-2)
11. Rear seat (P. 1-8)

See the page number indicated in parentheses for operating details.

INSTRUMENT PANEL

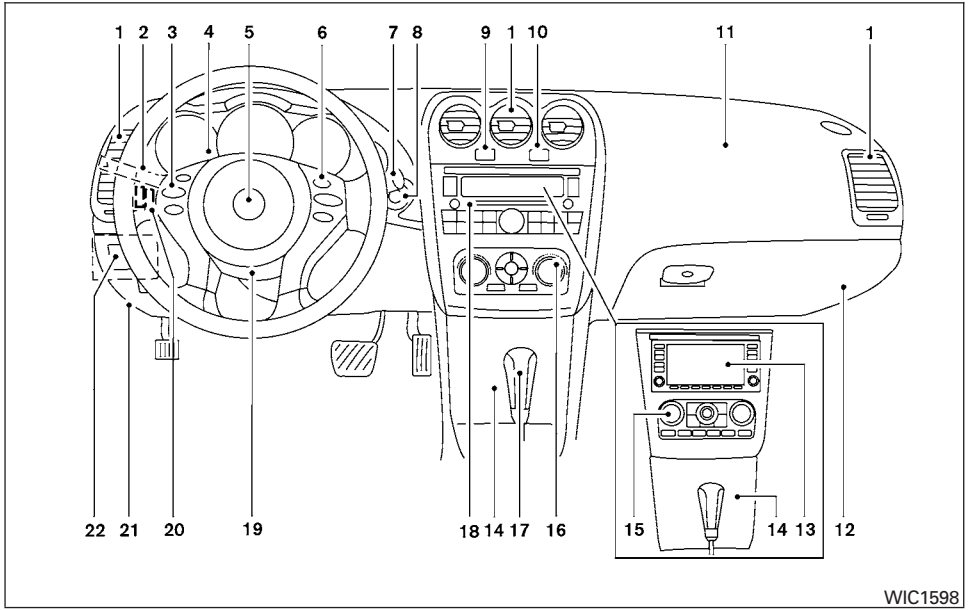

1. Vents (P. 4-18)
2. Headlight/fog light (if so equipped)/turn signal switch (P. 2-29)
3. Steering wheel switch for audio control (if so equipped)/Bluetooth® Hands-free Phone System (if so equipped) (P. 4-95, P. 4-91, P. 4-106)
4. Meters and gauges (P. 2-3)
5. Driver supplemental air bag/horn (P. 1-41, P. 2-35)
6. Cruise control main/set switch (P. 5-20)
7. Windshield wiper and washer switch (P. 2-28)
8. Ignition switch (P. 5-7)
9. Hazard warning flasher switch (P. 2-34)
10. Front passenger air bag status light (P. 1-51)
11. Front passenger supplemental air bag (P. 1-41)
12. Glove box (P. 2-41)
13. Navigation system* (if so equipped) (P. 4-2)
14. Covered storage box (P. 2-42)
15. Heater and air conditioner (automatic) (P. 4-26)
16. Heater and air conditioner (manual) (P. 4-19)
17. Shift selector (P. 5-11)
18. Audio system controls (if so equipped)/ Storage (if so equipped) (P. 4-29, P.2-42)
19. Tilt/telescopic steering wheel controls (P. 3-28)

20. Vehicle information display controls (P. 2-17)
21. Hood release (P. 3-23)
22. Trunk opener (P. 3-23)
    Vehicle Dynamic Control (VDC) OFF switch (P. 2-36)
    NISSAN Intelligent Key™ port (P. 5-7)

*: Refer to the separate Navigation System Owner's Manual (if so equipped).

See the page number indicated in parentheses for operating details.

ENGINE COMPARTMENT CHECK LOCATIONS

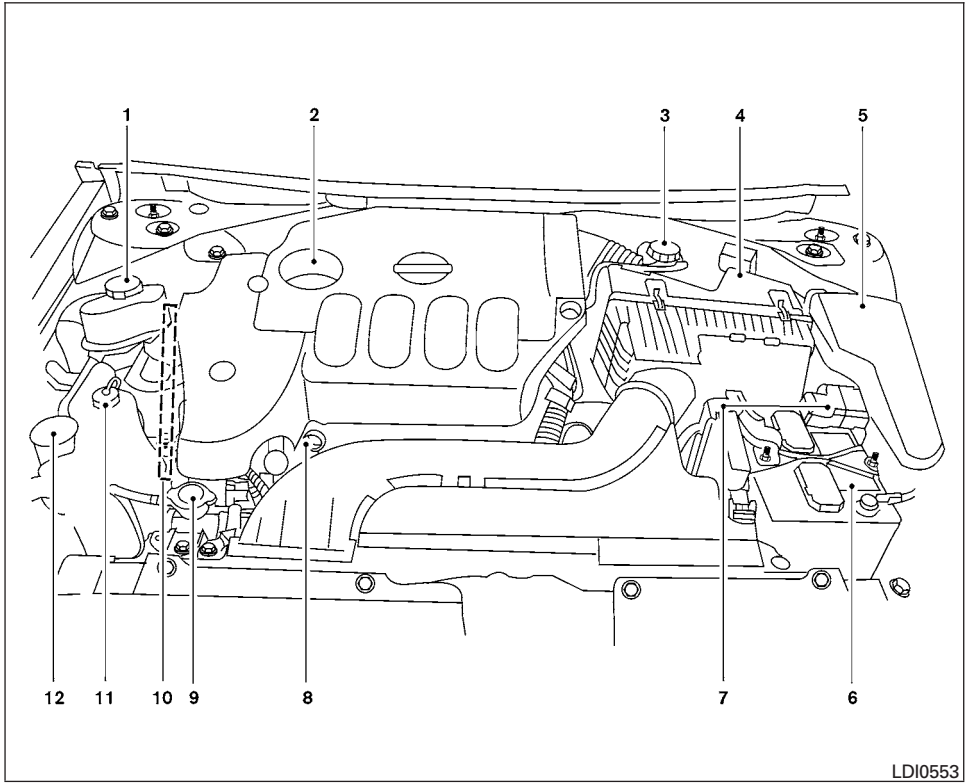

QR25DE engine

1. Power steering fluid reservoir (P. 8-14)
2. Engine oil filler cap (P. 8-10)
3. Brake fluid reservoir/Clutch fluid reservoir (M/T model) (P. 8-15, 8-15)
4. Air cleaner (P. 8-20)
5. Fuse block (P. 8-23)
6. Battery (P. 8-16)
7. Fuse/fusible link box (P. 8-23)
8. Engine oil dipstick (P. 8-10)
9. Radiator cap (P. 8-8)
10. Drive belt location (P. 8-18)
11. Engine coolant reservoir (P. 8-8)
12. Windshield-washer fluid reservoir (P. 8-15)

See the page number indicated in parentheses for operating details.

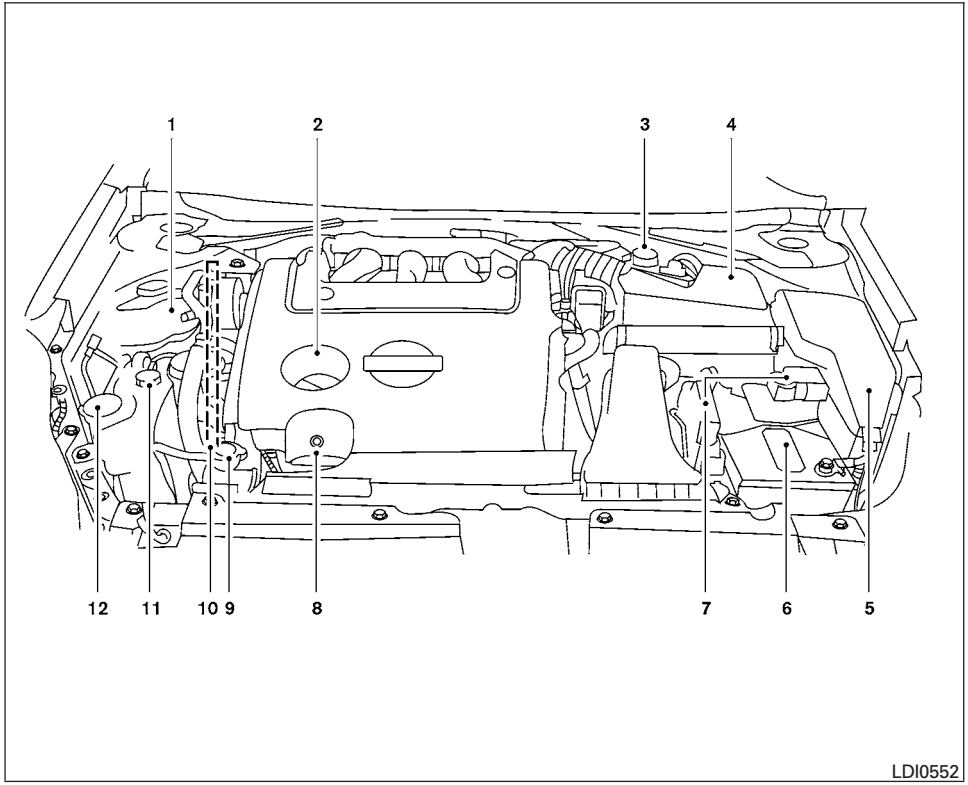

VQ35DE engine

1. Power steering fluid reservoir (P. 8-14)
2. Engine oil filler cap (P. 8-10)
3. Brake fluid reservoir/Clutch fluid reservoir (M/T model) (P. 8-15, 8-15)
4. Air cleaner (P. 8-20)
5. Fuse block (P. 8-23)
6. Battery (P. 8-16)
7. Fuse/fusible link box (P. 8-23)
8. Engine oil dipstick (P. 8-10)
9. Radiator cap (P. 8-8)
10. Drive belt location (P. 8-18)
11. Engine coolant reservoir (P. 8-8)
12. Windshield-washer fluid reservoir (P. 8-15)

See the page number indicated in parentheses for operating details.

WARNING/INDICATOR LIGHTS

Warning light	Name	Page
ABS or	Anti-lock Braking System (ABS) warning light	2-11
BRAKE or	Brake warning light	2-11
	Charge warning light	2-11
AT CHECK	Continuously Variable Transmission (CVT) check warning light (if so equipped)	2-12
	Engine oil pressure warning light	2-12

Warning light	Name	Page
	Low tire pressure warning light	2-12
	Master warning light	2-13
	Seat belt warning light and chime	2-14
	Supplemental air bag warning light	2-14

Indicator light	Name	Page
P	Continuously Variable Transmission (CVT) position indicator light (if so equipped)	2-14
CRUISE	Cruise main switch indicator light	2-14

Indicator light	Name	Page
SET	Cruise set switch indicator light	2-15
OFF	Front passenger air bag status light	2-15
	High beam indicator light (blue)	2-15
SERVICE ENGINE SOON	Malfunction Indicator Light (MIL)	2-15
	Security indicator light	2-27
	Slip indicator light	2-16
	Turn signal/hazard indicator lights	2-16
OFF	Vehicle Dynamic Control (VDC) OFF indicator light	2-16

1 Safety—Seats, seat belts and supplemental restraint system

Seats 1-2
Front manual seat adjustment (if so equipped) 1-2
Front power seat adjustment (if so equipped for driver's seat) 1-4
Folding rear seat 1-8
Head restraints 1-10
Seat belts 1-14
Precautions on seat belt usage 1-14
Pregnant women 1-17
Injured persons 1-17
Three-point type seat belt with retractor 1-17
Seat belt extenders 1-20
Seat belt maintenance 1-20
Child safety 1-21
Infants 1-22
Small children 1-22
Larger children 1-22
Child restraints 1-23
Precautions on child restraints 1-23
LATCH (Lower Anchors and Tethers for CHildren) System 1-25
Rear-facing child restraint installation using LATCH 1-27
Rear-facing child restraint installation using the seat belts 1-29
Forward-facing child restraint installation using LATCH 1-32
Forward-facing child restraint installation using the seat belts 1-34
Installing top tether strap 1-38
Booster seats 1-38
Supplemental restraint system 1-41
Precautions on supplemental restraint system 1-41
Supplemental air bag warning labels 1-56
Supplemental air bag warning light 1-57

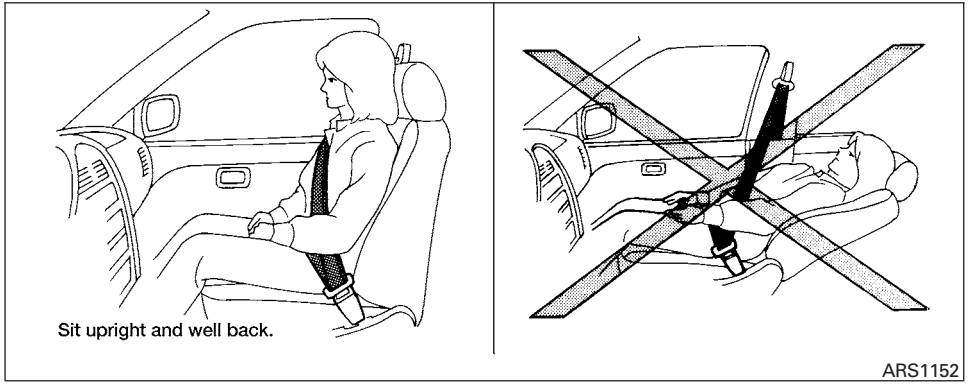

⚠ WARNING

- **Do not ride in a moving vehicle when the seatback is reclined. This can be dangerous. The shoulder belt will not be against your body. In an accident, you could be thrown into it and receive neck or other serious injuries. You could also slide under the lap belt and receive serious internal injuries.**

- **For the most effective protection when the vehicle is in motion, the seat should be upright. Always sit well back in the seat with both feet on the floor and adjust the seat properly. See "Precautions on seat belt usage" later in this section.**
- **After adjustment, gently rock in the seat to make sure it is securely locked.**
- **Do not leave children unattended inside the vehicle. They could unknowingly activate switches or controls. Unattended children could become involved in serious accidents.**
- **The seatback should not be reclined any more than needed for comfort. Seat belts are most effective when the passenger sits well back and straight up in the seat. If the seatback is reclined, the risk of sliding under the lap belt and being injured is increased.**

⚠ CAUTION

When adjusting the seat positions, be sure not to contact any moving parts to avoid possible injuries and/or damage.

FRONT MANUAL SEAT ADJUSTMENT (if so equipped)

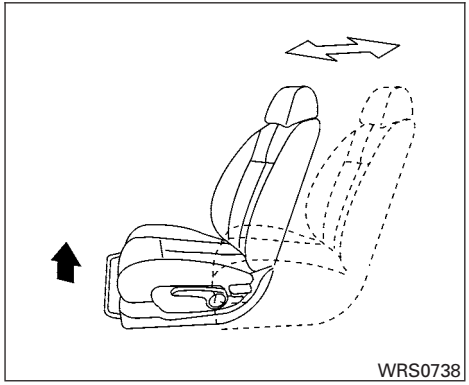

Forward and backward

Pull the center of the bar up and hold it while you slide the seat forward or backward to the desired position. Release the bar to lock the seat in position.

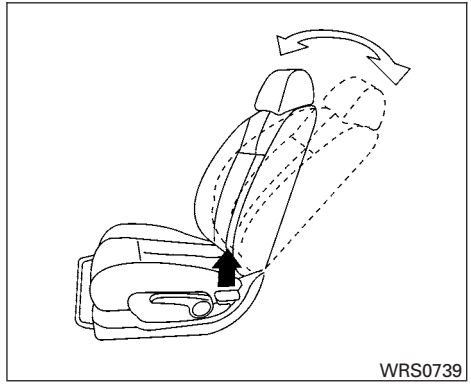

Reclining

To recline the seatback, pull the lever up and lean back. To bring the seatback forward, pull the lever up and lean your body forward. Release the lever to lock the seatback in position.

The reclining feature allows adjustment of the seatback for occupants of different sizes for added comfort and to help obtain proper seat belt fit. See “Precautions on seat belt usage” later in this section. Also, the seatback can be reclined to allow occupants to rest when the vehicle is stopped and the transmission is in P (Park) or N (Neutral) position with the parking brake fully applied.

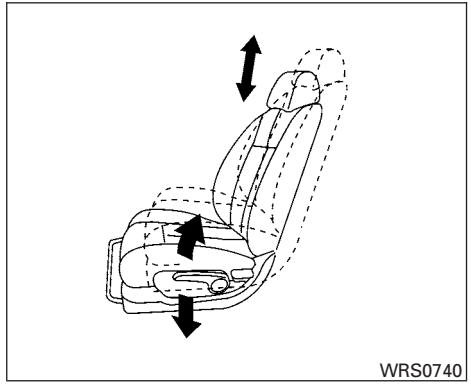

Seat lifter (if so equipped for driver’s seat)

Pull up or push down the adjusting lever to adjust the seat height until the desired position is achieved.

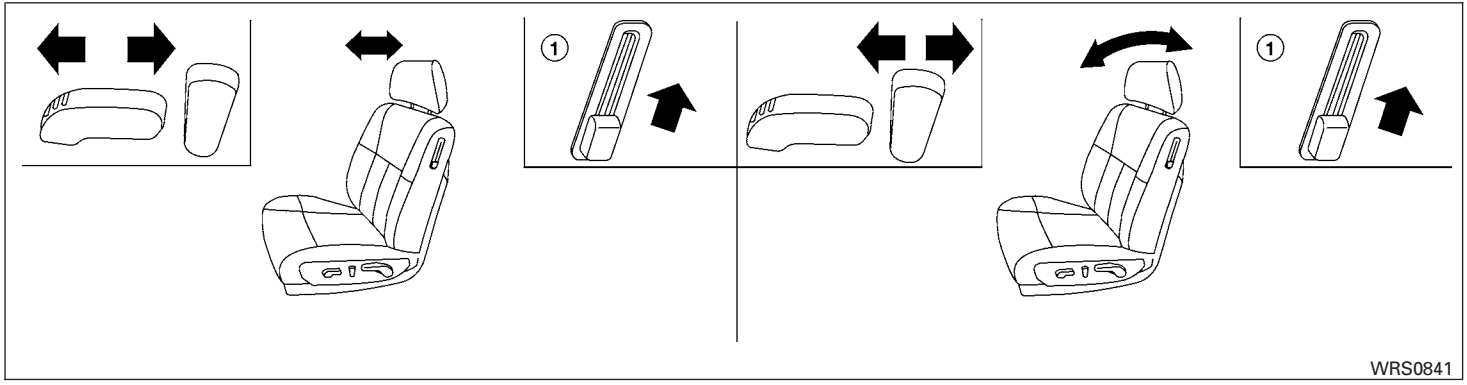

Coupe

FRONT POWER SEAT ADJUSTMENT (if so equipped for driver's seat)

Operating tips

⚠ WARNING

Before driving the vehicle, return the seatback to an upright seating position after manually releasing it. Also, make sure the seat is locked in place. Failure to do so may cause the seat to move in a collision or sudden stop. This may result in damage to the seat or personal injury.

⚠ CAUTION

- **Do not operate the power recline switch when the seatback has been manually released using the upper seatback release lever ①. Doing so can damage the seat.**
- **Do not pull on the upper seatback release lever or the trim to return the seatback to a normal seating position. Doing so may damage the seat.**

- The power seat motor has an auto-reset overload protection circuit. If the motor stops during operation, wait 30 seconds, then reactivate the switch.
- Do not operate the power seat switch for a long period of time when the engine is off. This will discharge the battery.

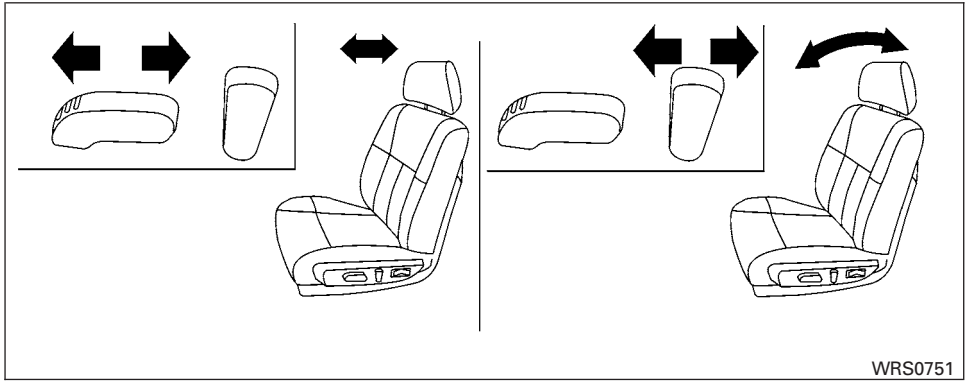

Sedan

- Pull up on the upper seatback release lever to release the seatback only. Push the seatback forward to allow for access to items behind the front seat. Push the seatback to the rear of the vehicle to return the seatback to the upright and locked position. The upper seatback release lever does not need to be used.

Forward and backward

Moving the switch forward or backward will slide the seat forward or backward to the desired position.

Reclining

Move the recline switch backward until the desired angle is obtained. To bring the seatback forward again, move the switch forward and move your body forward. The seatback will move forward.

The reclining feature allows adjustment of the seatback for occupants of different sizes for added comfort and to help obtain proper seat belt fit (see “Precautions on seat belt usage” later in this section). Also, the seatback can be reclined to allow occupants to rest when the vehicle is stopped and the transmission is in P (Park) or N (Neutral) position with the parking brake fully applied.

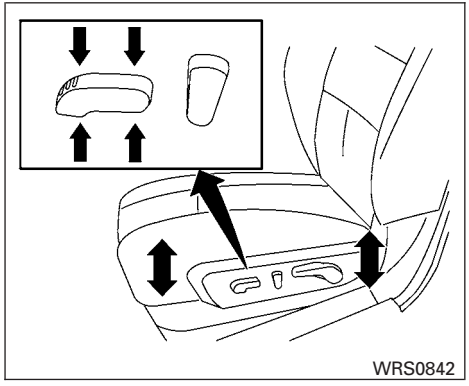

Coupe shown, Sedan similar

Seat lifter (if so equipped for driver's seat)

Pull the lever up or push down to adjust the angle and height of the seat cushion.

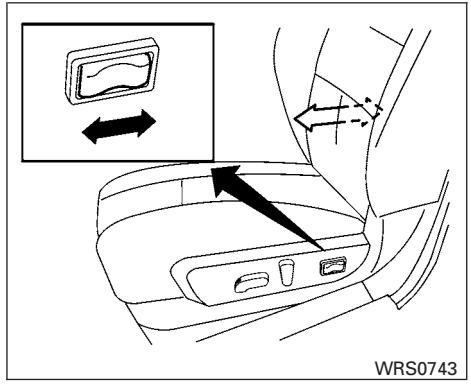

Type A

Lumbar support (if so equipped for driver's seat)

The lumbar support feature provides lower back support to the driver. Push the switch (Type A) forward or backward or move the lever (Type B) up or down to adjust the seat lumbar area.

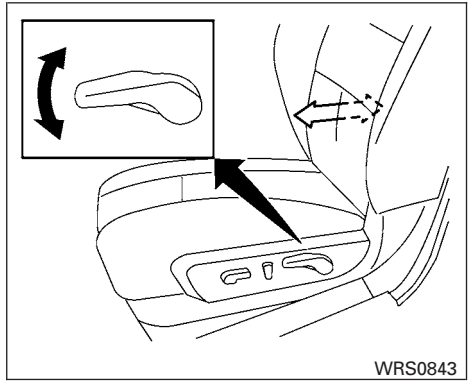

Type B

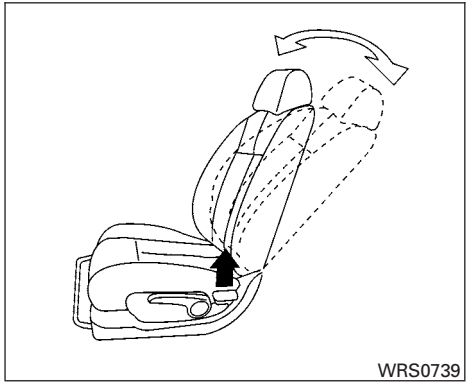

Entry to the rear seat from outside of the vehicle (if so equipped for Coupe models)

Pull the seat recliner lever to the uppermost position folding the seatback forward, releasing the seat track.

Slide the entire seat forward for access to the rear seat.

To return the seat to a locked position:

Push the upper seatback rearward until the seatback and track are locked.

Operating tips:

- The seatback and track will not lock until the seatback is returned rearward.
- The seatback will return to the first locking notch when using the seat recliner lever.

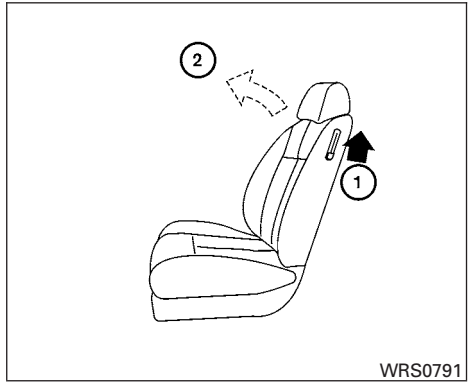

Exiting from the rear seat on the passenger's side, using the upper seatback release lever (if so equipped for Coupe models)

Pull the upper seatback release lever ① to the uppermost position, folding the seatback forward ②, releasing the seat track.

Slide the entire seat forward to exit from the rear seat.

To return the seat to a locked position:

Push the upper seatback rearward until the seatback and track are locked.

Operating tips:

- The seatback and track will not lock until the seat back is returned rearward.
- The seatback will return to an upright seating position if the upper seatback release lever is pulled to the uppermost position.

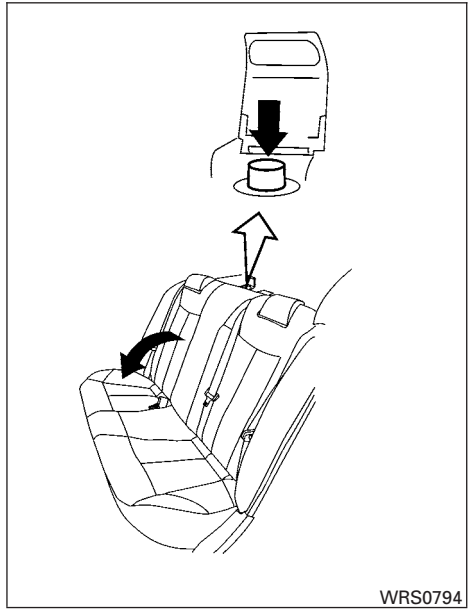

FOLDING REAR SEAT

Interior trunk access

The trunk can be accessed from the passenger side of the rear seat for loading and unloading, as shown.

1. Open the access cover on the rear parcel shelf.
2. Push down on the button on the rear parcel shelf.
3. Fold down the passenger's side seatback.

To remove or reinstall the seatback release button access covers, see "Upper tether anchor/key cylinder covers" in the "Maintenance and do-it-yourself" section of this manual.

⚠ WARNING

- **Never allow anyone to ride in the cargo area or on the rear seat when it is in the fold-down position. Use of these areas by passengers without proper restraints could result in serious injury in an accident or sudden stop.**
- **Properly secure all cargo with ropes or straps to help prevent it from sliding or shifting. Do not place cargo higher than the seatbacks. In a sudden stop or collision, unsecured cargo could cause personal injury.**

- **When returning the seatbacks to the upright position, be certain they are completely secured in the latched position. If they are not completely secured, passengers may be injured in an accident or sudden stop.**
- **Closely supervise children when they are around cars to prevent them from playing and becoming locked in the trunk where they could be seriously injured. Keep the car locked, with the rear seatback and trunk lid securely latched when not in use, and prevent children's access to car keys.**

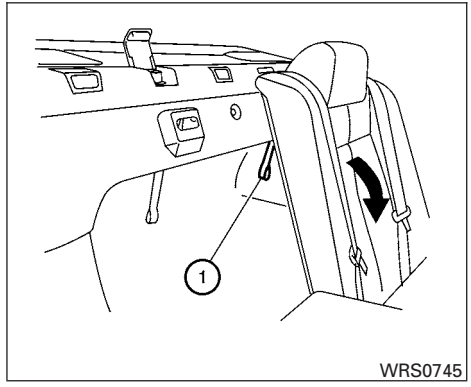

WRS0745

To fold down the driver's side of the rear seat, reach through the opening and pull on the strap ① located behind the seat.

The rear seats can be locked using the mechanical key to prevent unauthorized access. For more information on keys, refer to "Keys" in the "Pre-driving checks and adjustments" section of this manual.

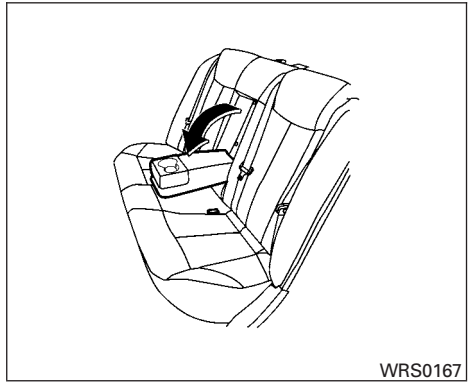
WRS0167

Center armrest (if so equipped)

Pull the armrest down until it is horizontal.

HEAD RESTRAINTS

⚠ WARNING

Head restraints supplement the other vehicle safety systems. They may provide additional protection against injury in certain rear end collisions. Adjust the head restraints properly, as specified in this section. Check the adjustment after someone else uses the seat. Do not attach anything to the head restraint stalks or remove the head restraint. Do not use the seat if the head restraint has been removed. If the head restraint was removed, reinstall and properly adjust the head restraint before an occupant uses the seating position. Failure to follow these instructions can reduce the effectiveness of the head restraints. This may increase the risk of serious injury or death in a collision.

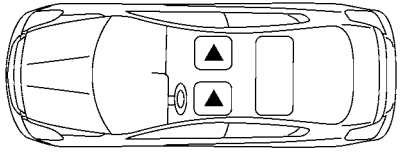

LRS0893

The illustration shows the seating positions equipped with head restraints. All of the head restraints are adjustable.

▲ Indicates the seating position is equipped with a head restraint.

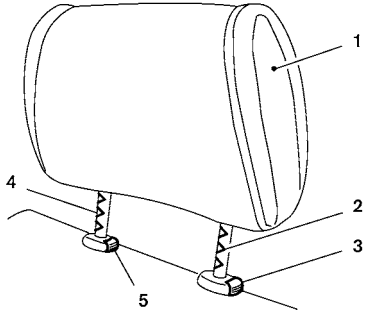

WRS0921

Components

1. Head restraint
2. Adjustment notches
3. Lock knob
4. Stalks
5. Release knob

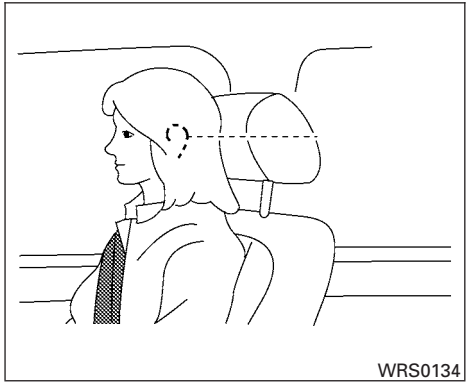

Adjustment

Adjust the head restraint so the center is level with the center of the seat occupant's ears.

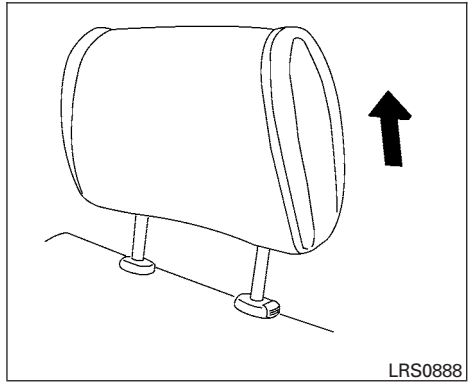

To raise the head restraint, pull it up.

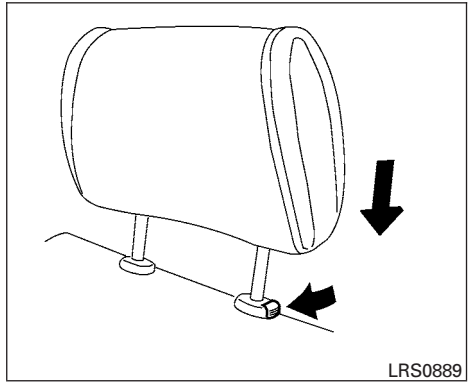

To lower, push and hold the lock knob and push the head restraint down.

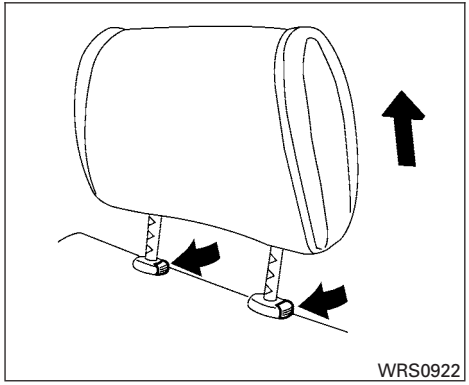

Removal

Use the following procedure to remove the adjustable head restraints.

1. Pull the head restraint up to the highest position.
2. Push and hold the lock knob and release knob.
3. Remove the head restraint from the seat.
4. Store the head restraint properly so it is not loose in the vehicle.
5. Reinstall and properly adjust the head restraint before an occupant uses the seating position.

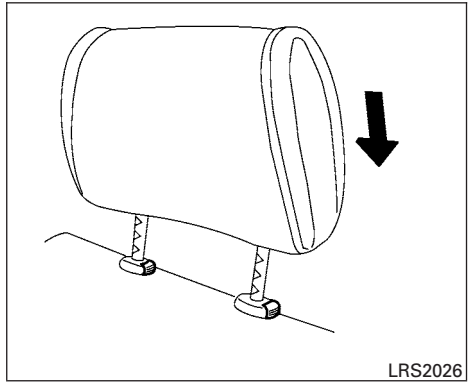

Install

1. Align the head restraint stalks with the holes in the seat. Make sure the head restraint is facing the correct direction.
2. Push and hold the lock knob and push the head restraint down.
3. Properly adjust the head restraint before an occupant uses the seating position.

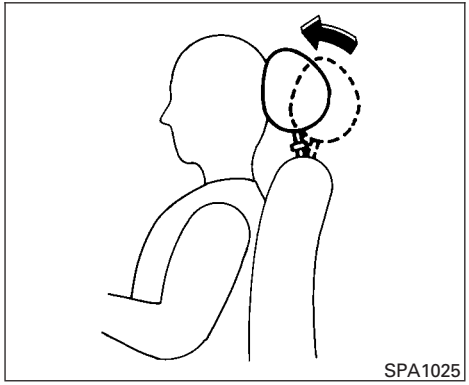

Front-seat Active Head Restraints

The Active Head Restraint moves forward utilizing the force that the seatback receives from the occupant in a rear-end collision. The movement of the head restraint helps support the occupant's head by reducing its backward movement and helping absorb some of the forces that may lead to whiplash-type injuries.

Active Head Restraints are effective for collisions at low to medium speeds in which it is said that whiplash injury occurs most.

Active Head Restraints operate only in certain rear-end collisions. After the collision, the head restraints return to their original position.

Adjust the Active Head Restraints properly as described in this section.

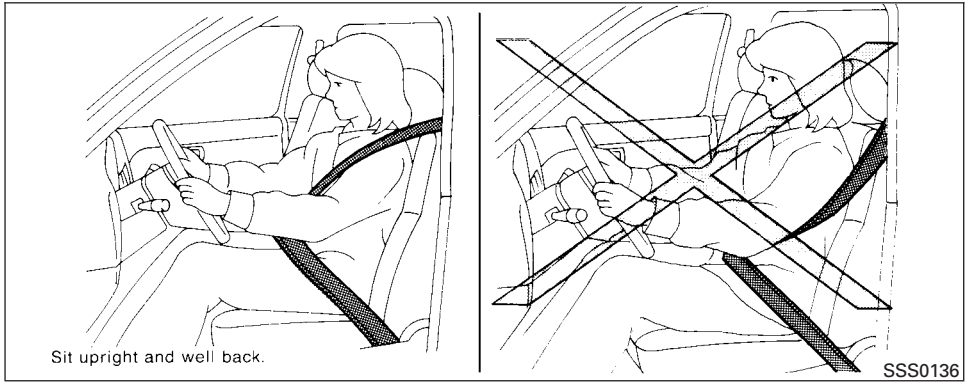

PRECAUTIONS ON SEAT BELT USAGE

If you are wearing your seat belt properly adjusted and you are sitting upright and well back in your seat with both feet on the floor, your chances of being injured or killed in an accident and/or the severity of injury may be greatly reduced. NISSAN strongly encourages you and all of your passengers to buckle up every time you drive, even if your seating position includes a supplemental air bag.

Most U.S. states and Canadian provinces or territories specify that seat belts be worn at all times when a vehicle is being driven.

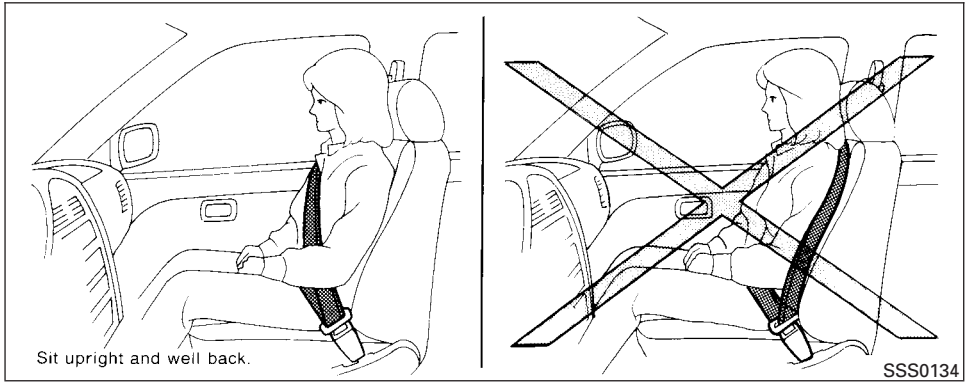

⚠ WARNING

- **Every person who drives or rides in this vehicle should use a seat belt at all times. Children should be properly restrained in the rear seat and, if appropriate, in a child restraint.**

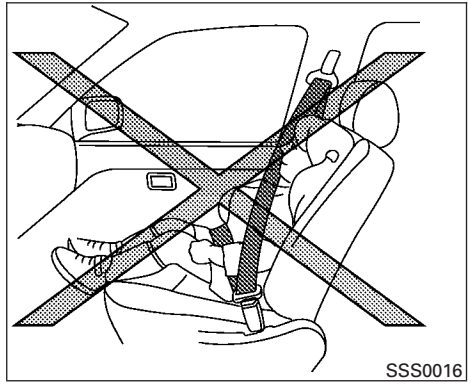

⚠ WARNING

- **The seat belt should be properly adjusted to a snug fit. Failure to do so may reduce the effectiveness of the entire restraint system and increase the chance or severity of injury in an accident. Serious injury or death can occur if the seat belt is not worn properly.**

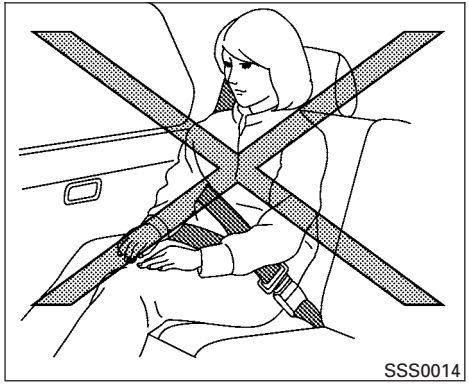

⚠ WARNING

- **Always route the shoulder belt over your shoulder and across your chest. Never put the belt behind your back, under your arm or across your neck. The belt should be away from your face and neck, but not falling off your shoulder.**
- **Position the lap belt as low and snug as possible AROUND THE HIPS, NOT THE WAIST. A lap belt worn too high could increase the risk of internal injuries in an accident.**
- **Be sure the seat belt tongue is securely fastened to the proper buckle.**
- **Do not wear the seat belt inside out or twisted. Doing so may reduce its effectiveness.**
- **Do not allow more than one person to use the same seat belt.**
- **Never carry more people in the vehicle than there are seat belts.**
- **If the seat belt warning light glows continuously while the ignition is turned ON with all doors closed and all seat belts fastened, it may indicate a malfunction in the system. Have the system checked by a NISSAN dealer.**
- **No changes should be made to the seat belt system. For example, do not modify the seat belt, add material, or install devices that may change the seat belt routing or tension. Doing so may affect the operation of the seat belt system. Modifying or tampering with the seat belt system may result in serious personal injury.**
- **Once a seat belt pretensioner has activated, it cannot be reused and must be replaced together with the retractor. See your NISSAN dealer.**
- **Removal and installation of pretensioner system components should be done by a NISSAN dealer.**
- **All seat belt assemblies, including retractors and attaching hardware, should be inspected after any collision by a NISSAN dealer. NISSAN recommends that all seat belt assemblies in use during a collision be replaced unless the collision was minor and the belts show no damage and continue to operate properly. Seat belt assemblies not in use during a collision should also be inspected and replaced if either damage or improper operation is noted.**
- **All child restraints and attaching hardware should be inspected after any collision. Always follow the restraint manufacturer's inspection instructions and replacement recommendations. The child restraints should be replaced if they are damaged.**

PREGNANT WOMEN

NISSAN recommends that pregnant women use seat belts. The seat belt should be worn snug and always position the lap belt as low as possible around the hips, not the waist. Place the shoulder belt over your shoulder and across your chest. Never run the lap/shoulder belt over your abdominal area. Contact your doctor for specific recommendations.

INJURED PERSONS

NISSAN recommends that injured persons use seat belts. Check with your doctor for specific recommendations.

THREE-POINT TYPE SEAT BELT WITH RETRACTOR

⚠ WARNING

- **Every person who drives or rides in this vehicle should use a seat belt at all times.**
- **Do not ride in a moving vehicle when the seatback is reclined. This can be dangerous. The shoulder belt will not be against your body. In an accident, you could be thrown into it and receive neck or other serious injuries. You could also slide under the lap belt and receive serious internal injuries.**
- **For the most effective protection when the vehicle is in motion, the seat should be upright. Always sit well back in the seat with both feet on the floor and adjust the seat belt properly.**

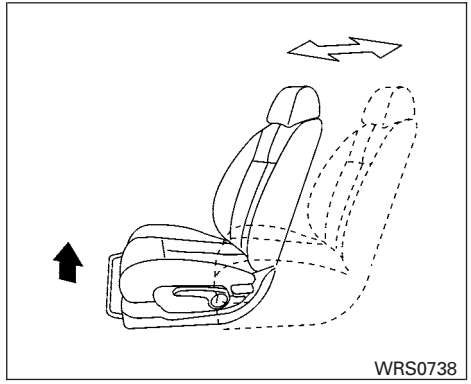

Manual front seat shown

Fastening the seat belts

1. Adjust the seat. See “Seats” earlier in this section.

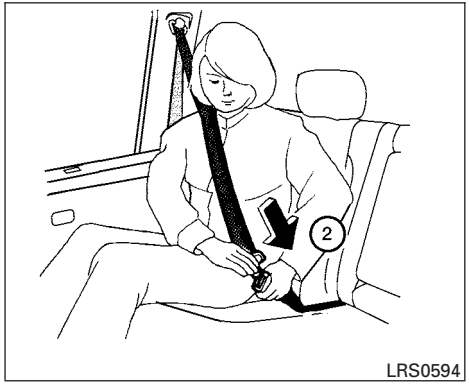

② Slowly pull the seat belt out of the retractor and insert the tongue into the buckle until you hear and feel the latch engage.

- **The retractor is designed to lock during a sudden stop or on impact. A slow pulling motion permits the seat belt to move, and allows you some freedom of movement in the seat.**
- **If the seat belt cannot be pulled from its fully retracted position, firmly pull the belt and release it. Then smoothly pull the belt out of the retractor.**

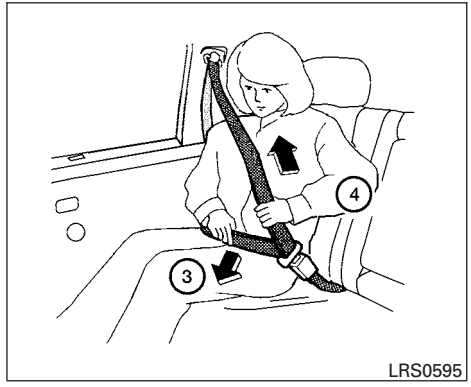

③ Position the lap belt portion **low and snug on the hips** as shown.

④ Pull the shoulder belt portion toward the retractor to take up extra slack. Be sure the shoulder belt is routed over your shoulder and across your chest.

The front passenger seat and the rear seating positions' three-point seat belts have two modes of operation:

- Emergency Locking Retractor (ELR)
- Automatic Locking Retractor (ALR)

The Emergency Locking Retractor (ELR) mode allows the seat belt to extend and retract to allow the driver and passengers some freedom of movement in the seat. The ELR locks the seat belt when the vehicle slows down rapidly or during certain impacts.

The Automatic Locking Retractor (ALR) mode (child restraint mode) locks the seat belt for child restraint installation.

When the ALR mode is activated, the seat belt cannot be extended again until the seat belt tongue is detached from the buckle and fully retracted. The seat belt returns to the ELR mode after the seat belt fully retracts. See "Child restraints" later in this section for more information.

The ALR mode should be used only for child restraint installation. During normal seat belt use by an occupant, the ALR mode should not be activated. If it is activated, it may cause uncomfortable seat belt tension.

⚠ WARNING

When fastening the seat belts, be certain that the seatbacks are completely secured in the latched position. If they are not completely secured, passengers may be injured in an accident or sudden stop.

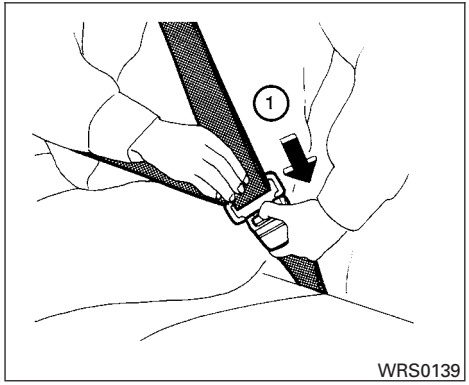

Unfastening the seat belts

① To unfasten the seat belt, press the button on the buckle. The seat belt automatically retracts.

Checking seat belt operation

Seat belt retractors are designed to lock seat belt movement by two separate methods:

- When the seat belt is pulled quickly from the retractor.
- When the vehicle slows down rapidly.

To increase your confidence in the seat belts, check the operation as follows:

- Grasp the shoulder belt and pull forward quickly. The retractor should lock and restrict further belt movement.

If the retractor does not lock during this check or if you have any questions about seat belt operation, see a NISSAN dealer.

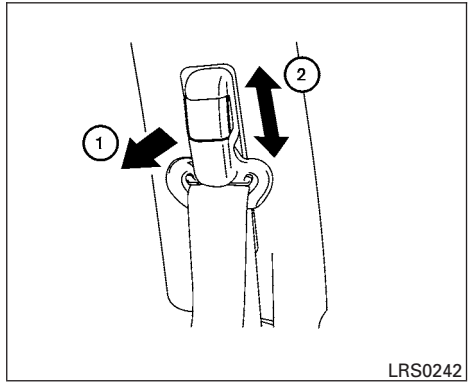

Shoulder belt height adjustment (Sedan, front seats)

The shoulder belt anchor height should be adjusted to the position best for you. See “Precautions on seat belt usage” earlier in this section. To adjust, pull out the adjustment button ① and move the shoulder belt anchor to the desired position ②, so the belt passes over the center of the shoulder. The belt should be away from your face and neck, but not falling off your shoulder. Release the adjustment button to lock the shoulder belt anchor into position.

⚠ WARNING

- **After adjustment, release the adjustment button and try to move the shoulder belt anchor up and down to make sure it is securely fixed in position.**
- **The shoulder belt anchor height should be adjusted to the position best for you. Failure to do so may reduce the effectiveness of the entire restraint system and increase the chance or severity of injury in an accident.**

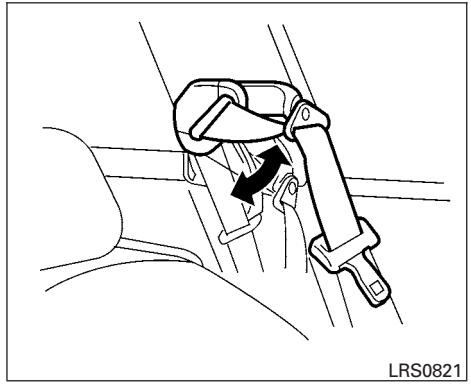

Shoulder belt guide (Coupe)

The shoulder arm can be adjusted to allow easier access to the shoulder belt. The arm can also be folded down to allow rear seat passengers easier access.

SEAT BELT EXTENDERS

If, because of body size or driving position, it is not possible to properly fit the lap/shoulder belt and fasten it, an extender that is compatible with the installed seat belts is available that can be purchased. The extender adds approximately 8 in (200 mm) of length and may be used for either the driver or front passenger seating position. See a NISSAN dealer for assistance with purchasing an extender if an extender is required.

⚠ WARNING

- **Only NISSAN seat belt extenders, made by the same company which made the original equipment seat belts, should be used with NISSAN seat belts.**
- **Adults and children who can use the standard seat belt should not use an extender. Such unnecessary use could result in serious personal injury in the event of an accident.**
- **Never use seat belt extenders to install child restraints. If the child restraint is not secured properly, the child could be seriously injured in a collision or a sudden stop.**

SEAT BELT MAINTENANCE

- **To clean the seat belt webbing,** apply a mild soap solution or any solution recommended for cleaning upholstery or carpet. Then wipe with a cloth and allow the seat belts to dry in the shade. Do not allow the seat belts to retract until they are completely dry.

- **If dirt builds up in the shoulder belt guide** of the seat belt anchors, the seat belts may retract slowly. Wipe the shoulder belt guide with a clean, dry cloth.
- **Periodically check to see that the seat belt and the metal components,** such as buckles, tongues, retractors, flexible wires and anchors, work properly. If loose parts, deterioration, cuts or other damage on the webbing is found, the entire seat belt assembly should be replaced.

Children need adults to help protect them. They need to be properly restrained.

In addition to the general information in this manual, child safety information is available from many other sources, including doctors, teachers, government traffic safety offices, and community organizations. Every child is different, so be sure to learn the best way to transport your child.

There are three basic types of child restraint systems:

- Rear-facing child restraint
- Forward-facing child restraint
- Booster seat

The proper restraint depends on the child's size. Generally, infants up to about 1 year and less than 20 lbs (9 kg) should be placed in rear-facing child restraints. Forward-facing child restraints are available for children who outgrow rear-facing child restraints and are at least 1 year old. Booster seats are used to help position a vehicle lap/shoulder belt on a child who can no longer use a forward-facing child restraint.

⚠ WARNING

Infants and children need special protection. The vehicle's seat belts may not fit them properly. The shoulder belt may come too close to the face or neck. The lap belt may not fit over their small hip bones. In an accident, an improperly fitting seat belt could cause serious or fatal injury. Always use appropriate child restraints.

All U.S. states and Canadian provinces or territories require the use of approved child restraints for infants and small children. See "Child restraints" later in this section.

A child restraint may be secured in the vehicle by using either the LATCH (Lower Anchor and Tethers for CHildren) system or with the vehicle seat belt. See the "Child restraints" section for more information.

NISSAN recommends that all pre-teens and children be restrained in the rear seat. Studies show that children are safer when properly restrained in the rear seat than in the front seat.

This is especially important because your vehicle has a supplemental restraint system (air bag system) for the front passenger. See "Supplemental restraint system" later in this section.

INFANTS

Infants up to at least 1 year old should be placed in a rear-facing child restraint. NISSAN recommends that infants be placed in child restraints that comply with Federal Motor Vehicle Safety Standards or Canadian Motor Vehicle Safety Standards. You should choose a child restraint that fits your vehicle and always follow the manufacturer's instructions for installation and use.

SMALL CHILDREN

Children that are over one year old and weigh at least 20 lbs (9 kg) can be placed in a forward-facing child restraint. Refer to the manufacturer's instructions for minimum and maximum weight and height recommendations. NISSAN recommends that small children be placed in child restraints that comply with Federal Motor Vehicle Safety Standards or Canadian Motor Vehicle Safety Standards. You should choose a child restraint that fits your vehicle and always follow the manufacturer's instructions for installation and use.

LARGER CHILDREN

Children who are too large for child restraints should be seated and restrained by the seat belts which are provided. The seat belt may not fit properly if the child is less than 4 ft 9 in (142.5 cm) tall and weighs between 40 lbs (18 kg) and 80 lbs (36 kg). A booster seat should be used to obtain proper seat belt fit.

NISSAN recommends that a child be placed in a commercially available booster seat if the shoulder belt fits close to the face or neck or if the lap portion of the seat belt goes across the abdomen. The booster seat should raise the child so that the shoulder belt is properly positioned across the top, middle portion of the shoulder and the lap belt is low on the hips. A booster seat can only be used in seating positions that have a three-point type seat belt. The booster seat should fit the vehicle seat and have a label certifying that it complies with Federal Motor Vehicle Safety Standards or Canadian Motor Vehicle Safety Standards. Once the child has grown so the shoulder belt is no longer on or near the face and neck, use the shoulder belt without the booster seat.

⚠ WARNING

Never let a child stand or kneel on any seat and do not allow a child in the cargo area. The child could be seriously injured or killed in a sudden stop or collision.

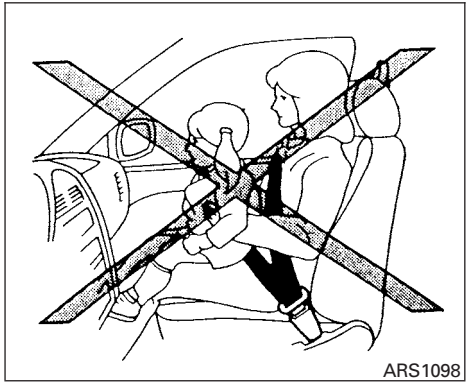
ARS1098

PRECAUTIONS ON CHILD RESTRAINTS

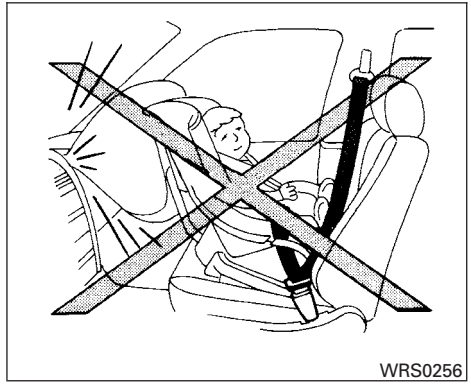
WRS0256

WARNING

- **Failure to follow the warnings and instructions for proper use and installation of child restraints could result in serious injury or death of a child or other passengers in a sudden stop or collision:**
  - **The child restraint must be used and installed properly. Always follow all of the child restraint manufacturer's instructions for installation and use.**
  - **Infants and children should never be held on anyone's lap. Even the strongest adult cannot resist the forces of a collision.**
  - **Do not put a seat belt around both a child and another passenger.**
  - **NISSAN recommends that all child restraints be installed in the rear seat. Studies show that children are safer when properly restrained in the rear seat than in the front seat. If you must install a forward-facing child restraint in the front seat, see "Forward-facing child restraint installation using the seat belts" later in this section.**
  - **Even with the NISSAN Advanced Air Bag System, never install a rear-facing child restraint in the front seat. An inflating air bag could seriously injure or kill a child. A rear-facing child restraint must only be used in the rear seat.**
  - **Be sure to purchase a child restraint that will fit the child and vehicle. Some child restraints may not fit properly in your vehicle.**

- **Child restraint anchor points are designed to withstand loads from child restraints that are properly fitted.**
- **Never use the anchor points for adult seat belts or harnesses.**
- **A child restraint with a top tether strap should not be used in the front passenger seat.**
- **Keep seatbacks as upright as possible after fitting the child restraint.**
- **Infants and children should always be placed in an appropriate child restraint while in the vehicle.**

- **When the child restraint is not in use, keep it secured with the LATCH system or a seat belt. In a sudden stop or collision, loose objects can injure occupants or damage the vehicle.**

⚠ CAUTION

A child restraint in a closed vehicle can become very hot. Check the seating surface and buckles before placing a child in the child restraint.

This vehicle is equipped with a universal child restraint anchor system, referred to as the LATCH (Lower Anchors and Tethers for CHildren) system. Some child restraints include rigid or webbing-mounted attachments that can be connected to these anchors. For details, see "LATCH (Lower Anchors and Tethers for CHildren) system" later in this section.

If you do not have a LATCH compatible child restraint, the vehicle seat belts can be used.

Several manufacturers offer child restraints for infants and children of various sizes. When selecting any child restraint, keep the following points in mind:

- Choose only a restraint with a label certifying that it complies with Federal Motor Vehicle Safety Standard 213 or Canadian Motor Vehicle Safety Standard 213.
- Check the child restraint in your vehicle to be sure it is compatible with the vehicle's seat and seat belt system.
- If the child restraint is compatible with your vehicle, place your child in the child restraint and check the various adjustments to be sure the child restraint is compatible with your child. Choose a child restraint that is designed for your child's height and weight. Always follow all recommended procedures.

All U.S. states and Canadian provinces or territories require that infants and small children be restrained in an approved child restraint at all times while the vehicle is being operated. Canadian law requires the top tether strap on forward-facing child restraints be secured to the designated anchor point on the vehicle.

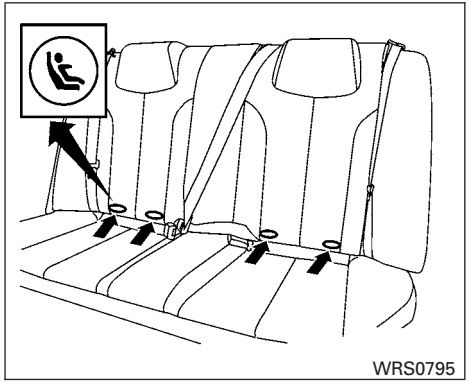

LATCH system lower anchor locations

LATCH (Lower Anchors and Tethers for CHildren) SYSTEM

Your vehicle is equipped with special anchor points that are used with LATCH (Lower Anchors and Tethers for CHildren) system compatible child restraints. This system may also be referred to as the ISOFIX or ISOFIX compatible system. With this system, you do not have to use a vehicle seat belt to secure the child restraint.

LATCH lower anchor

⚠ WARNING

Failure to follow the warnings and instructions for proper use and installation of child restraints could result in serious injury or death of a child or other passengers in a sudden stop or collision:

- **Attach LATCH system compatible child restraints only at the locations shown in the illustration.**
- **Do not secure a child restraint in the center rear seating position using the LATCH lower anchors. The child restraint will not be secured properly.**
- **Inspect the lower anchors by inserting your fingers into the lower anchor area. Feel to make sure there are no obstructions over the anchors such as seat belt webbing or seat cushion material. The child restraint will not be secured properly if the lower anchors are obstructed.**

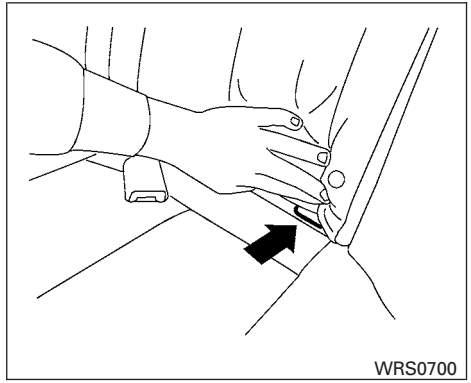

LATCH lower anchor location

LATCH lower anchor location

The LATCH lower anchors are located at the rear of the seat cushion near the seatback. A label is attached to the seatback to help you locate the LATCH lower anchors.

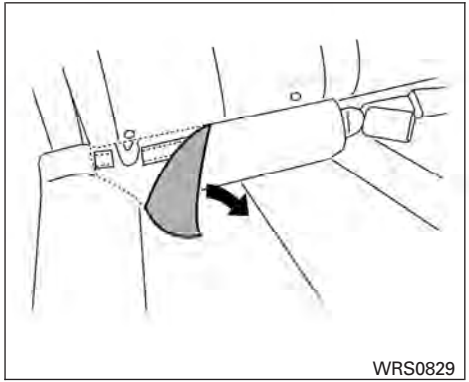

(if so equipped)

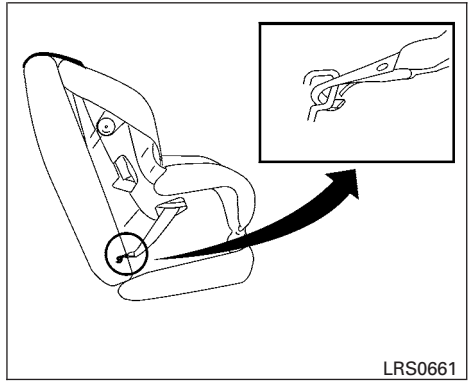

LATCH webbing-mounted attachment

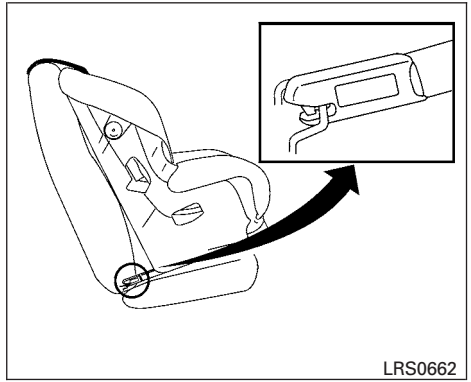

LATCH rigid-mounted attachment

Installing child restraint LATCH lower anchor attachments

LATCH compatible child restraints include two rigid or webbing-mounted attachments that can be connected to two anchors located at certain seating positions in your vehicle. With this system, you do not have to use a vehicle seat belt to secure the child restraint. Check your child restraint for a label stating that it is compatible with LATCH. This information may also be in the instructions provided by the child restraint manufacturer.

When installing a child restraint, carefully read and follow the instructions in this manual and those supplied with the child restraint.

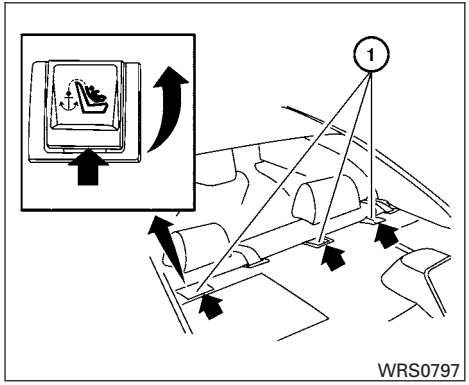

Top tether anchor point locations

The child restraint top tether strap must be used when installing the child restraint with the LATCH lower anchor attachments or seat belts. See “Installing top tether strap” later in this section.

If you have any questions when installing a top tether strap, consult your NISSAN dealer for details.

Anchor points ① are located on the rear parcel shelf.

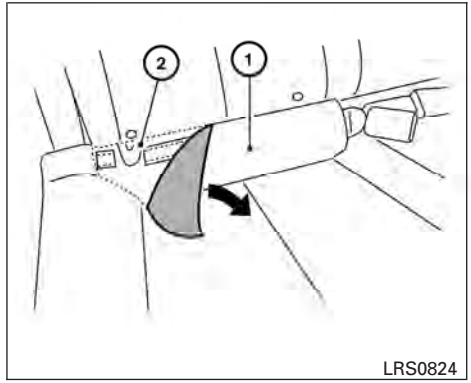

(if so equipped)

REAR-FACING CHILD RESTRAINT INSTALLATION USING LATCH

Refer to all Warnings and Cautions in the “Child Safety” and “Child Restraint” sections before installing a child restraint.

Follow these steps to install a rear-facing child restraint using the LATCH system:

1. If the rear seat cushion has a flap ①, pull the flap down to allow access to the anchors ②.
2. Position the child restraint on the seat. Always follow the child restraint manufacturer’s instructions.

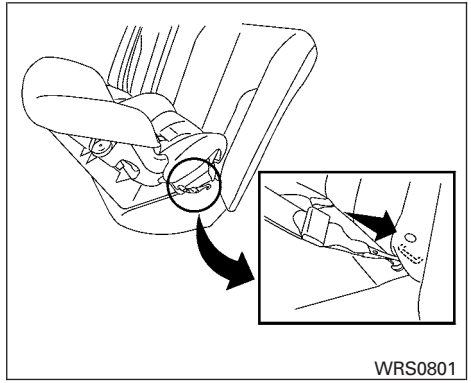

Rear-facing web-mounted – step 3

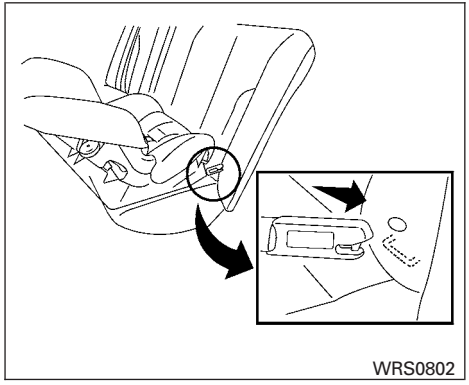

Rear-facing rigid-mounted – step 3

3. Secure the child restraint anchor attachments to the LATCH lower anchors. Check to make sure the LATCH attachment is properly attached to the lower anchors.

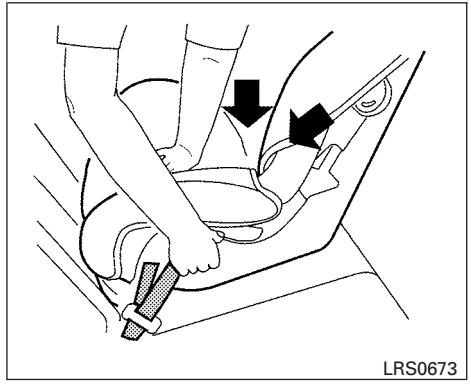

Rear-facing – step 4

4. For child restraints that are equipped with webbing-mounted attachments, remove any additional slack from the anchor attachments. Press downward and rearward firmly in the center of the child restraint with your hand to compress the vehicle seat cushion and seatback while tightening the webbing of the anchor attachments.

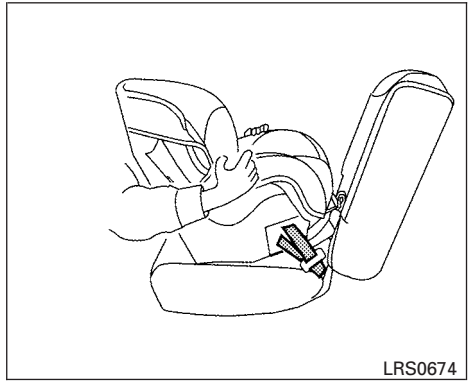

Rear-facing – step 5

5. After attaching the child restraint, test it before you place the child in it. Push it from side to side while holding the child restraint near the LATCH attachment path. The child restraint should not move more than 1 inch (25 mm), from side to side. Try to tug it forward and check to see if the LATCH attachment holds the restraint in place. If the restraint is not secure, tighten the LATCH attachment as necessary, or put the restraint in another seat and test it again. You may need to try a different child restraint or try installing by using the vehicle seat belt (if applicable). Not all child restraints fit in all types of vehicles.

6. Check to make sure the child restraint is properly secured prior to each use. If the child restraint is loose, repeat steps 2 through 5.

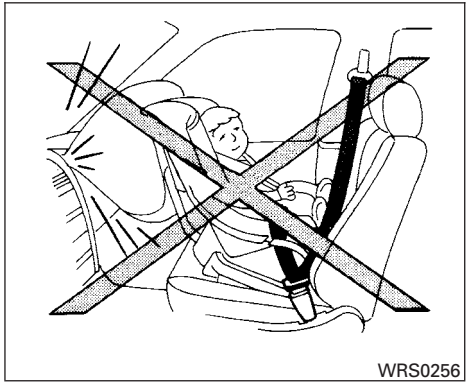

REAR-FACING CHILD RESTRAINT INSTALLATION USING THE SEAT BELTS

⚠ WARNING

The three-point seat belt with Automatic Locking Retractor (ALR) must be used when installing a child restraint. Failure to use the ALR mode will result in the child restraint not being properly secured. The restraint could tip over or be loose and cause injury to a child in a sudden stop or collision. Also, it can change the operation of the front passenger air bag. See "Front passenger air bag and status light" later in this section.

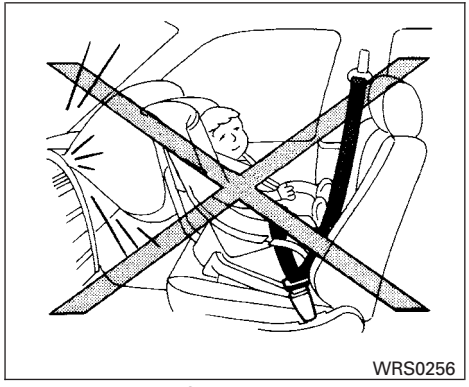

Rear-facing – step 1

Refer to all Warnings and Cautions in the “Child safety” and “Child restraints” sections before installing a child restraint.

Follow these steps to install a rear-facing child restraint using the vehicle seat belts in the rear seats:

1. **Child restraints for infants must be used in the rear-facing direction and therefore must not be used in the front seat.** Position the child restraint on the seat. Always follow the restraint manufacturer’s instructions.

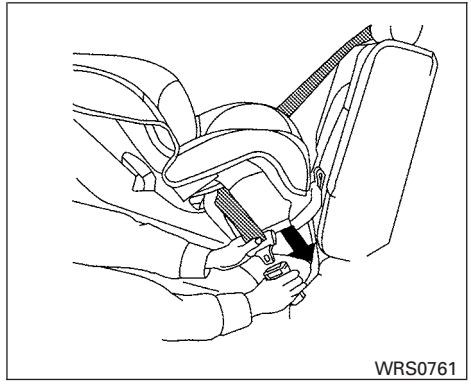

Rear-facing – step 2

2. Route the seat belt tongue through the child restraint and insert it into the buckle until you hear and feel the latch engage. Be sure to follow the child restraint manufacturer’s instructions for belt routing.

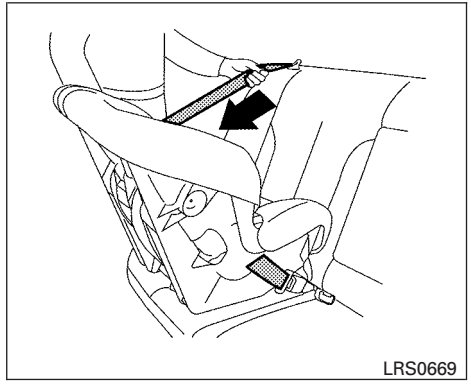

Rear-facing – step 3

3. Pull the shoulder belt until the belt is fully extended. At this time, the seat belt retractor is in the Automatic Locking Retractor (ALR) mode (child restraint mode). It reverts to the Emergency Locking Retractor (ELR) mode when the seat belt is fully retracted.

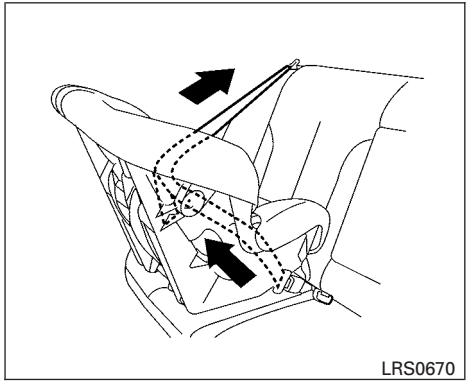

Rear-facing – step 4

4. Allow the seat belt to retract. Pull up on the shoulder belt to remove any slack in the belt.

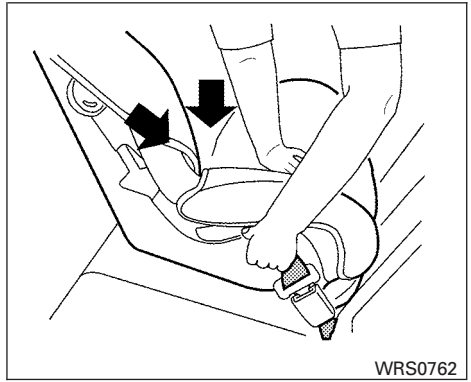

Rear-facing – step 5

5. Remove any additional slack from the seat belt; press downward and rearward firmly in the center of the child restraint to compress the vehicle seat cushion and seatback while pulling up on the seat belt.

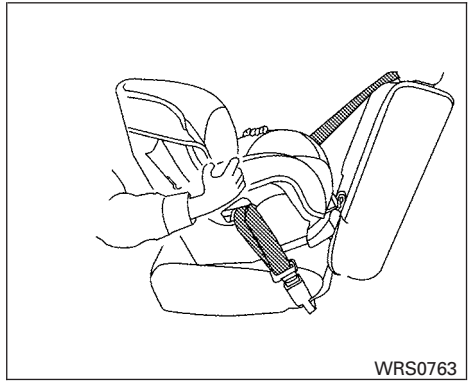

Rear-facing – step 6

6. After attaching the child restraint, test it before you place the child in it. Push it from side to side while holding the child restraint near the seat belt path. The child restraint should not move more than 1 inch (25 mm), from side to side. Try to tug it forward and check to see if the belt holds the restraint in place. If the restraint is not secure, tighten the seat belt as necessary, or put the restraint in another seat and test it again. You may need to try a different child restraint. Not all child restraints fit in all types of vehicles.

7. Check to make sure that the child restraint is properly secured prior to each use. If the seat belt is not locked, repeat steps 1 through 6.

After the child restraint is removed and the seat belt fully retracted, the ALR mode (child restraint mode) is canceled.

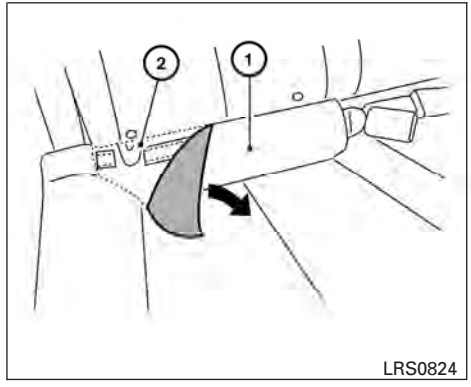

(if so equipped)

FORWARD-FACING CHILD RESTRAINT INSTALLATION USING LATCH

Refer to all Warnings and Cautions in the “Child Safety” and “Child Restraint” sections before installing a child restraint.

Follow these steps to install a forward-facing child restraint using the LATCH system:

1. If the rear seat cushion has a flap ①, pull the flap down to allow access to the anchors ②.
2. Position the child restraint on the seat. Always follow the child restraint manufacturer’s instructions.

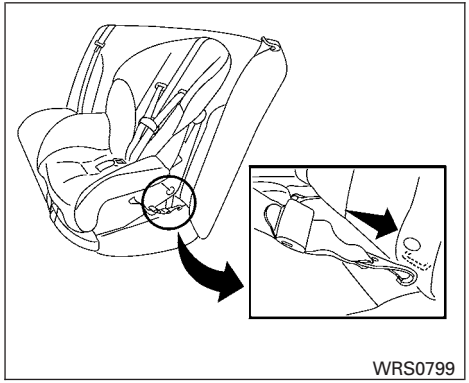

Forward-facing web-mounted – step 3

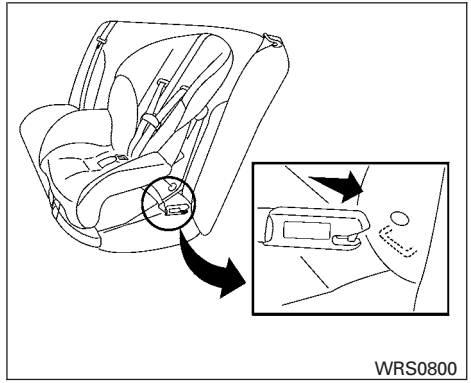

Forward-facing rigid-mounted – step 3

3. Secure the child restraint anchor attachments to the LATCH lower anchors. Check to make sure the LATCH attachment is properly attached to the lower anchors.

   If the child restraint is equipped with a top tether strap, route the top tether strap and secure the tether strap to the tether anchor point. See “Installing top tether strap” in this section. Do not install child restraints that require the use of a top tether strap in seating positions that do not have a top tether anchor.

4. The back of the child restraint should be secured against the vehicle seatback.

   If the seating position does not have an adjustable head restraint and it is interfering with the proper child restraint fit, try another seating position or a different child restraint.

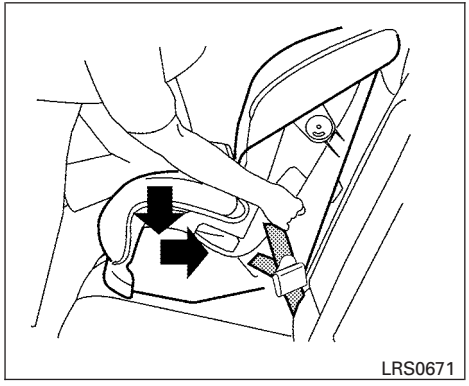

Forward-facing – step 5

5. For child restraints that are equipped with webbing-mounted attachments, remove any additional slack from the anchor attachments. Press downward and rearward firmly in the center of the child restraint with your knee to compress the vehicle seat cushion and seatback while tightening the webbing of the anchor attachments.
6. Tighten the tether strap according to the manufacturer's instructions to remove any slack.

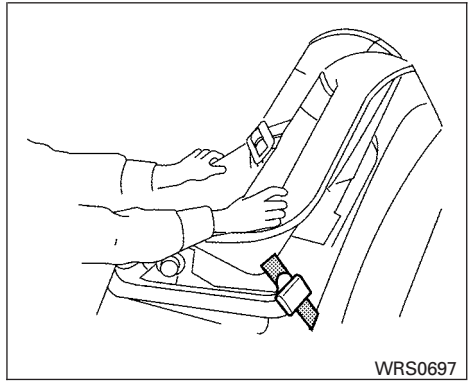

Forward-facing – step 7

7. After attaching the child restraint, test it before you place the child in it. Push it from side to side while holding the child restraint near the LATCH attachment path. The child restraint should not move more than 1 inch (25 mm), from side to side. Try to tug it forward and check to see if the LATCH attachment holds the restraint in place. If the restraint is not secure, tighten the LATCH attachment as necessary, or put the restraint in another seat and test it again. You may need to try a different child restraint. Not all child restraints fit in all types of vehicles.
8. Check to make sure the child restraint is properly secured prior to each use. If the child restraint is loose, repeat steps 2 through 7.

FORWARD-FACING CHILD RESTRAINT INSTALLATION USING THE SEAT BELTS

⚠ WARNING

The three-point seat belt with Automatic Locking Retractor (ALR) must be used when installing a child restraint. Failure to use the ALR mode will result in the child restraint not being properly secured. The restraint could tip over or be loose and cause injury to a child in a sudden stop or collision. Also, it can change the operation of the front passenger air bag. See "Front passenger air bag and status light" later in this section.

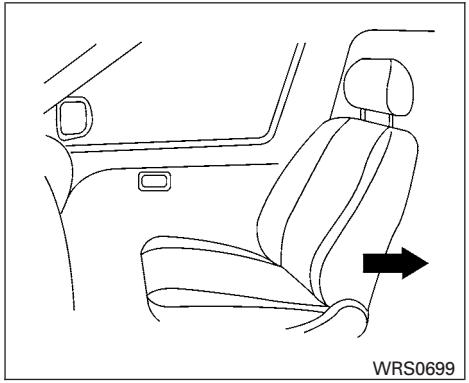

Forward-facing (front passenger seat) – step 1

Refer to all Warnings and Cautions in the “Child Safety” and “Child Restraint” sections before installing a child restraint.

Follow these steps to install a forward-facing child restraint using the vehicle seat belt in the rear seats or in the front passenger seat:

1. **If you must install a child restraint in the front seat, it should be placed in a forward-facing direction only. Move the seat to the rearmost position. Child restraints for infants must be used in the rear-facing direction and, therefore, must not be used in the front seat.**
2. Position the child restraint on the seat. Always follow the child restraint manufacturer’s instructions.

   The back of the child restraint should be secured against the vehicle seatback.

   If necessary, adjust or remove the head restraint to obtain the correct child restraint fit. If the head restraint is removed, store it in a secure place. **Be sure to reinstall the head restraint when the child restraint is removed.** See “Head restraints” in this section for head restraint adjustment, removal and installation information.

   If the seating position does not have an adjustable head restraint and it is interfering with the proper child restraint fit, try another seating position or a different child restraint.

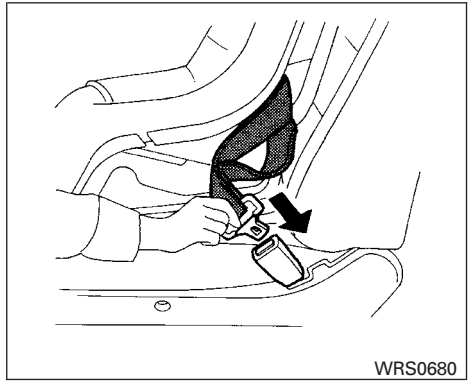

Forward-facing – step 3

3. Route the seat belt tongue through the child restraint and insert it into the buckle until you hear and feel the latch engage. Be sure to follow the child restraint manufacturer’s instructions for belt routing.

   If the child restraint is equipped with a top tether strap, route the top tether strap and secure the tether strap to the tether anchor point (rear seat installation only). See “Installing top tether strap” in this section. Do not install child restraints that require the use of a top tether strap in seating positions that do not have a top tether anchor.

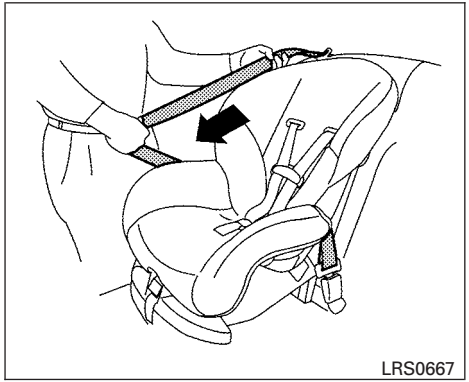

Forward-facing – step 4

4. Pull the shoulder belt until the belt is fully extended. At this time, the seat belt retractor is in the Automatic Locking Retractor (ALR) mode (child restraint mode). It reverts to Emergency Locking Retractor (ELR) mode when the seat belt is fully retracted.

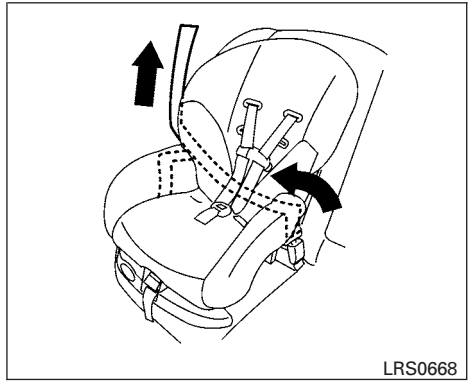

Forward-facing – step 5

5. Allow the seat belt to retract. Pull up on the shoulder belt to remove any slack in the belt.

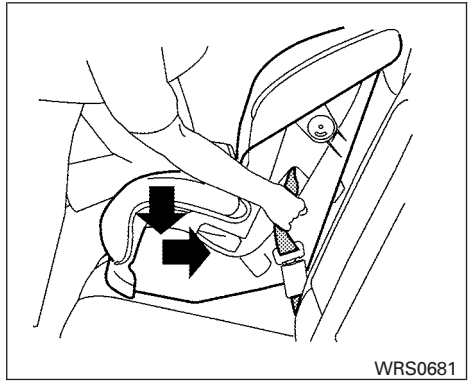

Forward-facing – step 6

6. Remove any additional slack from the seat belt; press downward and rearward firmly in the center of the child restraint with your knee to compress the vehicle seat cushion and seatback while pulling up on the seat belt.
7. Tighten the tether strap according to the manufacturer's instructions to remove any slack.

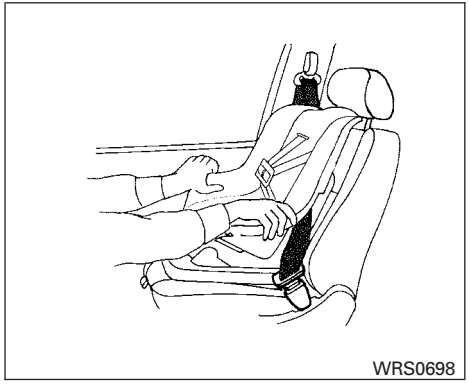

Forward-facing – step 8

8. After attaching the child restraint, test it before you place the child in it. Push it from side to side while holding the child restraint near the seat belt path. The child restraint should not move more than 1 inch (25 mm), from side to side. Try to tug it forward and check to see if the belt holds the restraint in place. If the restraint is not secure, tighten the seat belt as necessary, or put the restraint in another seat and test it again. You may need to try a different child restraint. Not all child restraints fit in all types of vehicles.
9. Check to make sure the child restraint is properly secured prior to each use. If the seat belt is not locked, repeat steps 2 through 8.

Forward-facing – step 10

10. If the child restraint is installed in the front passenger seat, place the ignition switch in the ON position. The front passenger air bag status light should illuminate. If this light is not illuminated see “Front passenger air bag and status light” in this section. **Move the child restraint to another seating position.** Have the system checked by a NISSAN dealer.

After the child restraint is removed and the seat belt is fully retracted, the ALR mode (child restraint mode) is canceled.

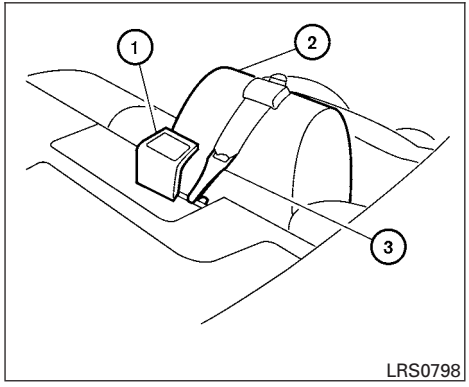

LRS0798

INSTALLING TOP TETHER STRAP

First, secure the child restraint with the LATCH lower anchors (rear outboard seat positions only) or the seat belt, as applicable.

1. Flip up the anchor cover ① from the anchor point which is located directly behind the child seat.
2. Position the top tether strap over the top of the seatback ②.
3. Secure the tether strap to the tether anchor point on the rear parcel shelf ③.
4. Refer to the appropriate child restraint installation procedure steps in this section before tightening the tether strap.

To remove or reinstall the tether anchor covers, see “Upper tether anchor/key cylinder covers” in the “Maintenance and do-it-yourself” section of this manual.

If you have any questions when installing a top tether strap, consult your NISSAN dealer for details.

BOOSTER SEATS

Precautions on booster seats

⚠ WARNING

If a booster seat and seat belt are not used properly, the risk of a child being injured in a sudden stop or collision greatly increases:

- **Make sure the shoulder portion of the belt is away from the child’s face and neck and the lap portion of the belt does not cross the stomach.**
- **Make sure the shoulder belt is not behind the child or under the child’s arm.**
- **A booster seat must only be installed in a seating position that has a lap/shoulder belt.**

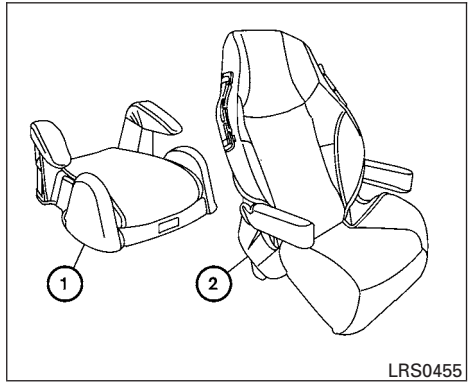

LRS0455

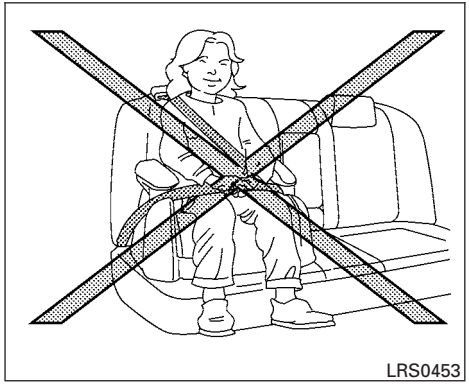
LRS0453

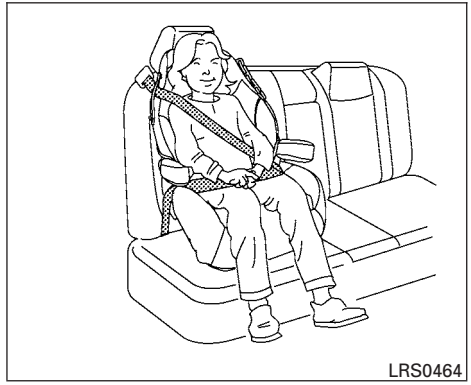
LRS0464

Booster seats of various sizes are offered by several manufacturers. When selecting any booster seat, keep the following points in mind:

- Choose only a booster seat with a label certifying that it complies with Federal Motor Vehicle Safety Standard 213 or Canadian Motor Vehicle Safety Standard 213.
- Check the booster seat in your vehicle to be sure it is compatible with the vehicle's seat and seat belt system.
- Make sure the child's head will be properly supported by the booster seat or vehicle seat. The seatback must be at or above the center of the child's ears. For example, if a low back booster seat ① is chosen, the vehicle seatback must be at or above the center of the child's ears. If the seatback is lower than the center of the child's ears, a high back booster seat ② should be used.
- If the booster seat is compatible with your vehicle, place the child in the booster seat and check the various adjustments to be sure the booster seat is compatible with the child. Always follow all recommended procedures.

All U.S. states and Canadian provinces or territories require that infants and small children be restrained in an approved child restraint at all times while the vehicle is being operated.

The instructions in this section apply to booster seat installation in the rear seats or the front passenger seat.

Booster seat installation

⚠ CAUTION

Do not use the lap/shoulder belt in the Automatic Locking Retractor mode when using a booster seat with the seat belts.

Refer to all Warnings and Cautions in the “Child Safety”, “Child Restraint” and “Booster Seats” sections before installing a child restraint.

Follow these steps to install a booster seat in the rear seat or in the front passenger seat:

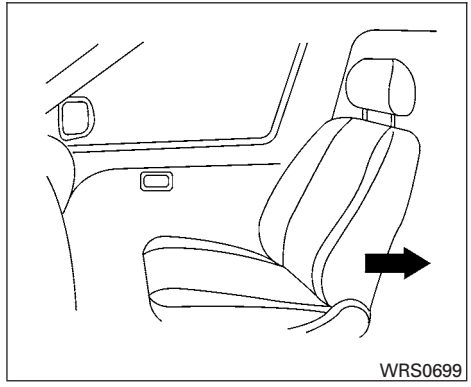

1. **If you must install a booster seat in the front seat, move the seat to the rear-most position.**
2. Position the booster seat on the seat. Only place it in a front-facing direction. Always follow the booster seat manufacturer’s instructions.

Front passenger position

3. The booster seat should be positioned on the vehicle seat so that it is stable.

   If necessary, adjust or remove the head restraint to obtain the correct booster seat fit. If the head restraint is removed, store it in a secure place. **Be sure to reinstall the head restraint when the booster seat is removed.** See “Head restraints” in this section for head restraint adjustment, removal and installation information.

If the seating position does not have an adjustable head restraint and it is interfering with the proper booster seat fit, try another seating position or a different booster seat.

4. Position the lap portion of the seat belt low and snug on the child's hips. Be sure to follow the booster seat manufacturer's instructions for adjusting the seat belt routing.
5. Pull the shoulder belt portion of the seat belt toward the retractor to take up extra slack. Be sure the shoulder belt is positioned across the top, middle portion of the child's shoulder. Be sure to follow the booster seat manufacturer's instructions for adjusting the seat belt routing.
6. Follow the warnings, cautions and instructions for properly fastening a seat belt shown in "Three-point type seat belt with retractor" earlier in this section.

7. If the booster seat is installed in the front passenger seat, place the ignition switch in the ON position. The front passenger air bag status light may or may not illuminate, depending on the size of the child and the type of booster seat being used. See "Front passenger air bag and status light" later in this section.

PRECAUTIONS ON SUPPLEMENTAL RESTRAINT SYSTEM

This Supplemental Restraint System (SRS) section contains important information concerning the following systems:

- Driver and passenger supplemental front-impact air bag (NISSAN Advanced Air Bag System)
- Front seat-mounted side-impact supplemental air bag
- Roof-mounted curtain side-impact supplemental air bag
- Seat belt with pretensioner

Supplemental front-impact air bag system: The NISSAN Advanced Air Bag System can help cushion the impact force to the head and chest of the driver and front passenger in certain frontal collisions.

Front seat-mounted side-impact supplemental air bag system: This system can help cushion the impact force to the chest and pelvic area of the driver and front passenger in certain side-impact collisions. The side air bags are designed to inflate on the side where the vehicle is impacted.

Roof-mounted curtain side-impact supplemental air bag system: This system can help cushion the impact force to the head of occupants in front and rear outboard seating positions in certain side-impact collisions. The curtain air bags are designed to inflate on the side where the vehicle is impacted.

These supplemental restraint systems are designed to **supplement** the crash protection provided by the driver and front passenger seat belts and are **not a substitute** for them. Seat belts should always be correctly worn and the occupant seated a suitable distance away from the steering wheel, instrument panel and door finishers. (See "Seat belts" earlier in this section for instructions and precautions on seat belt usage.)

The supplemental air bags operate only when the ignition switch is placed in the ON position.

After placing the ignition switch in the ON position, the supplemental air bag warning light illuminates. The supplemental air bag warning light will turn off after about 7 seconds if the system is operational.

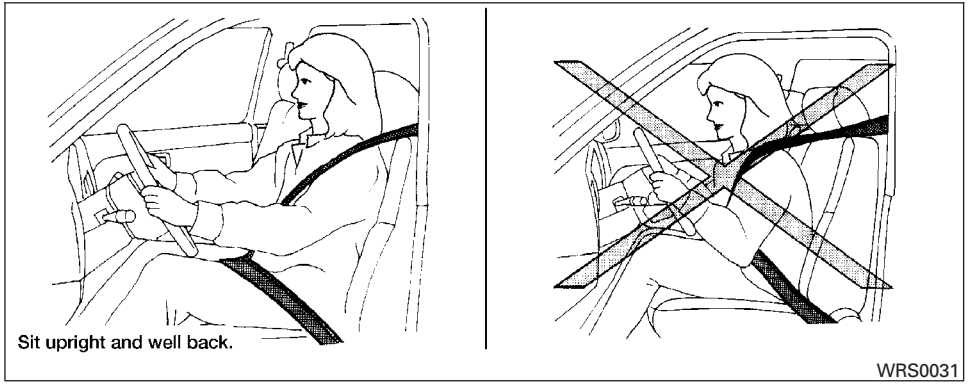

⚠ WARNING

- **The front air bags ordinarily will not inflate in the event of a side impact, rear impact, rollover, or lower severity frontal collision. Always wear your seat belts to help reduce the risk or severity of injury in various kinds of accidents.**
- **The front passenger air bag will not inflate if the passenger air bag status light is lit or if the front passenger seat is unoccupied. See "Front passenger air bag and status light" later in this section.**
- **The seat belts and the front air bags are most effective when you are sitting well back and upright in the seat. The front air bags inflate with great force. Even with the NISSAN Advanced Air Bag System, if you are unrestrained, leaning forward, sitting sideways or out of position in any way, you are at greater risk of injury or death in a crash. You may also receive serious or fatal injuries from the front air bag if you are up against it when it inflates. Always sit back against the seatback and as far away as practical from the steering wheel or instrument panel. Always use the seat belts.**

- **The driver and front passenger seat belt buckles are equipped with sensors that detect if the seat belts are fastened. The Advanced Air Bag System monitors the severity of a collision and seat belt usage then inflates the air bags as needed. Failure to properly wear seat belts can increase the risk or severity of injury in an accident.**
- **The front passenger seat is equipped with an occupant classification sensor (pattern sensor) that turns the front passenger air bag OFF under some conditions. This sensor is only used in this seat. Failure to be properly seated and wearing the seat belt can increase the risk or severity of injury in an accident. See "Front passenger air bag and status light" later in this section.**
- **Keep hands on the outside of the steering wheel. Placing them inside the steering wheel rim could increase the risk that they are injured when the front air bag inflates.**

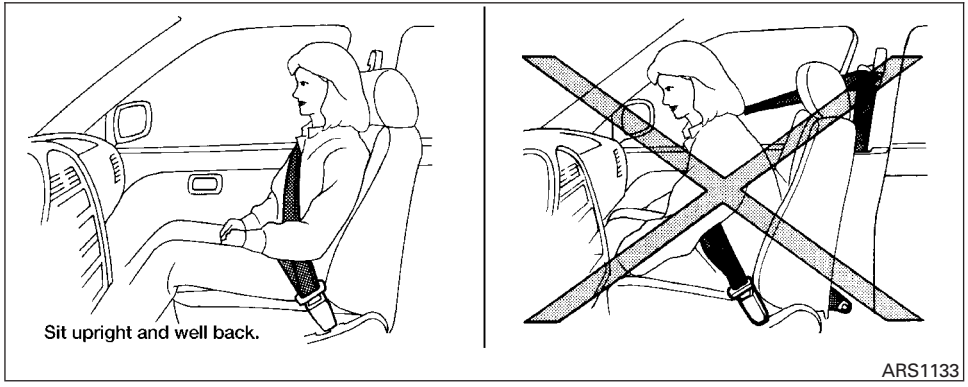

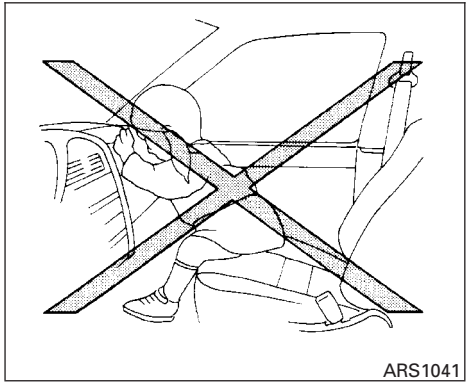
ARS1041

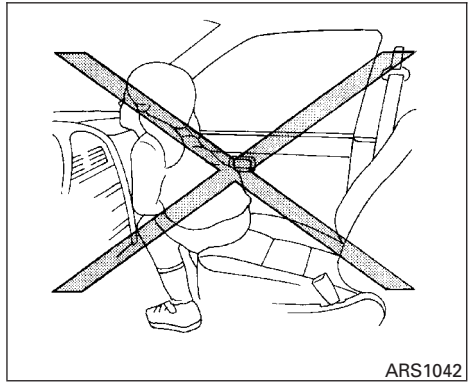
ARS1042

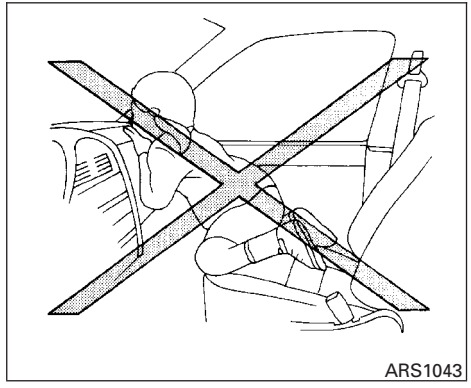
ARS1043

⚠ WARNING

- **Never let children ride unrestrained or extend their hands or face out of the window. Do not attempt to hold them in your lap or arms. Some examples of dangerous riding positions are shown in the illustrations.**

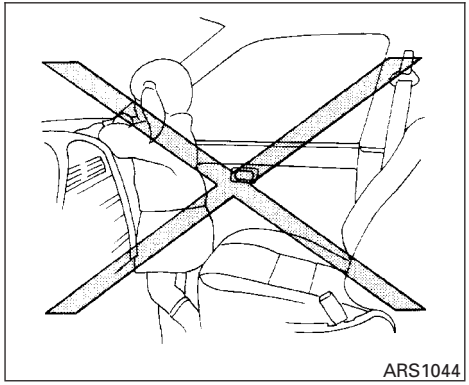
ARS1044

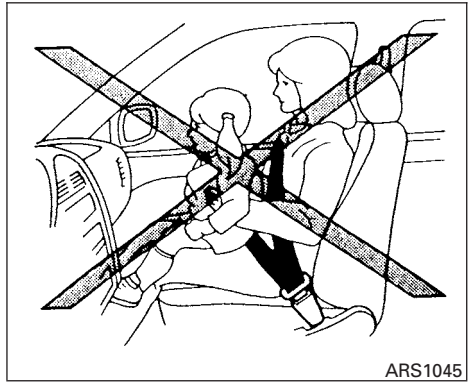
ARS1045

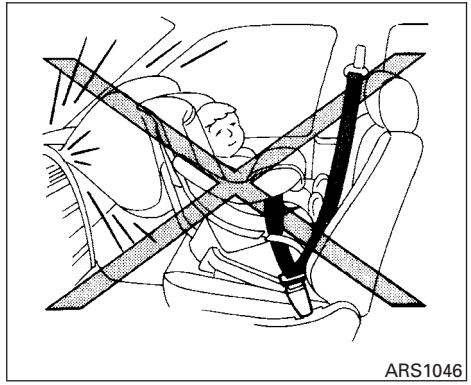
ARS1046

⚠ WARNING

- **Children may be severely injured or killed when the front air bags, side air bags or curtain air bags inflate if they are not properly restrained. Pre-teens and children should be properly restrained in the rear seat, if possible.**
- **Even with the NISSAN Advanced Air Bag System, never install a rear-facing child restraint in the front seat. An inflating front air bag could seriously injure or kill your child. See "Child restraints" earlier in this section for details.**

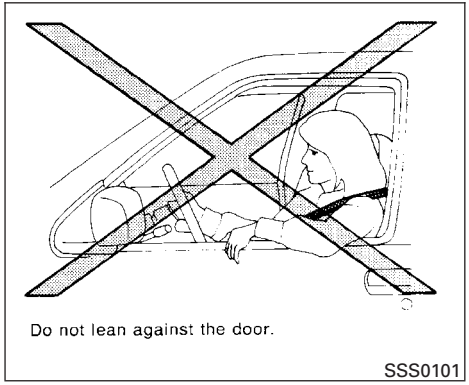

⚠ WARNING

Front seat-mounted side-impact supplemental air bags and roof-mounted curtain side-impact supplemental air bags:

- **The side air bags and curtain air bags ordinarily will not inflate in the event of a frontal impact, rear impact, rollover or lower severity side collision. Always wear your seat belts to help reduce the risk or severity of injury in various kinds of accidents.**

⚠ WARNING

- **The seat belts, the side air bags and curtain air bags are most effective when you are sitting well back and upright in the seat with both feet on the floor. The side air bag and curtain air bag inflate with great force. Do not allow anyone to place their hand, leg or face near the side air bag on the side of the seatback of the front seat or near the side roof rails. Do not allow anyone sitting in the front seats or rear outboard seats to extend their hand out of the window or lean against the door. Some examples of dangerous riding positions are shown in the previous illustrations.**

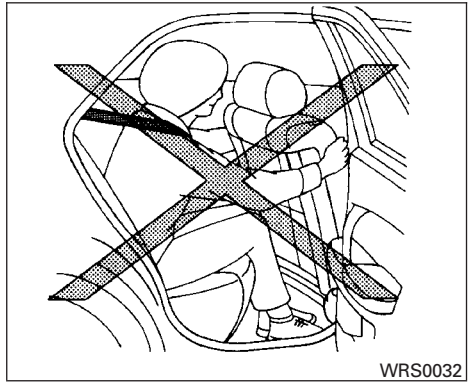

⚠ WARNING

- **When sitting in the rear seat, do not hold onto the seatback of the front seat. If the side air bag inflates, you may be seriously injured. Be especially careful with children, who should always be properly restrained. Some examples of dangerous riding positions are shown in the illustrations.**
- **Do not use seat covers on the front seatbacks. They may interfere with side air bag inflation.**

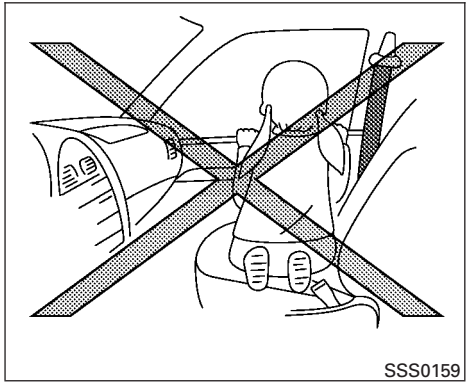
SSS0159

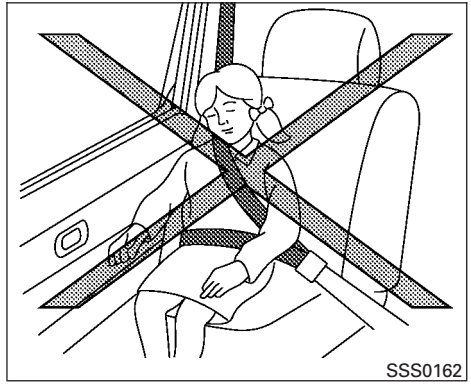
SSS0162

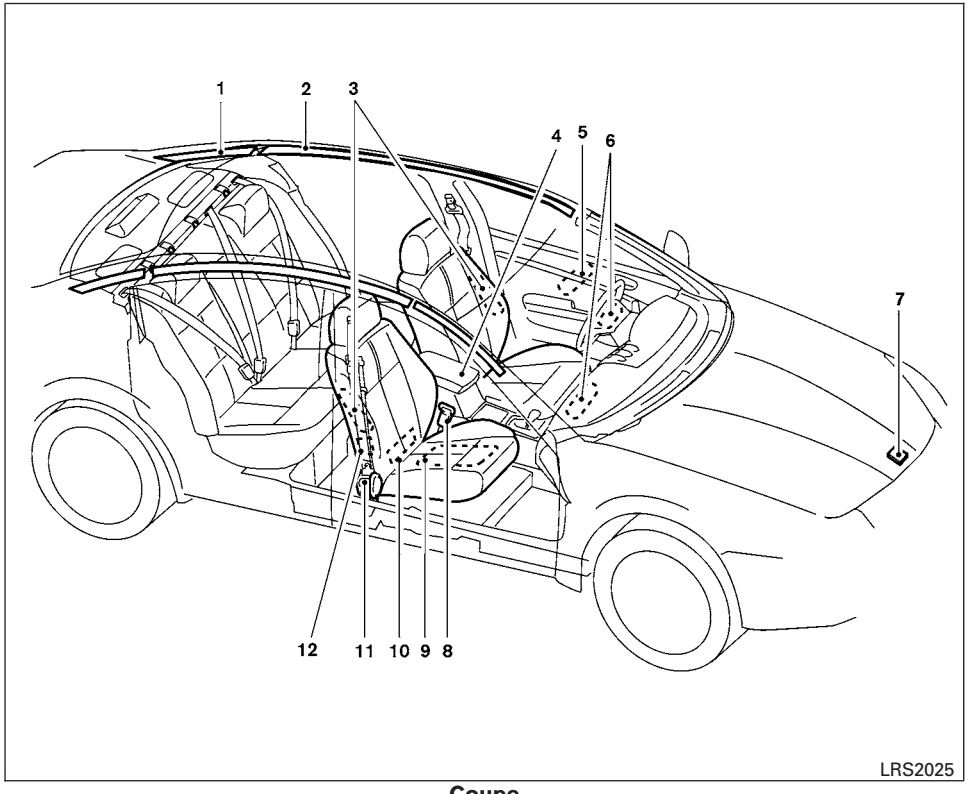

Coupe

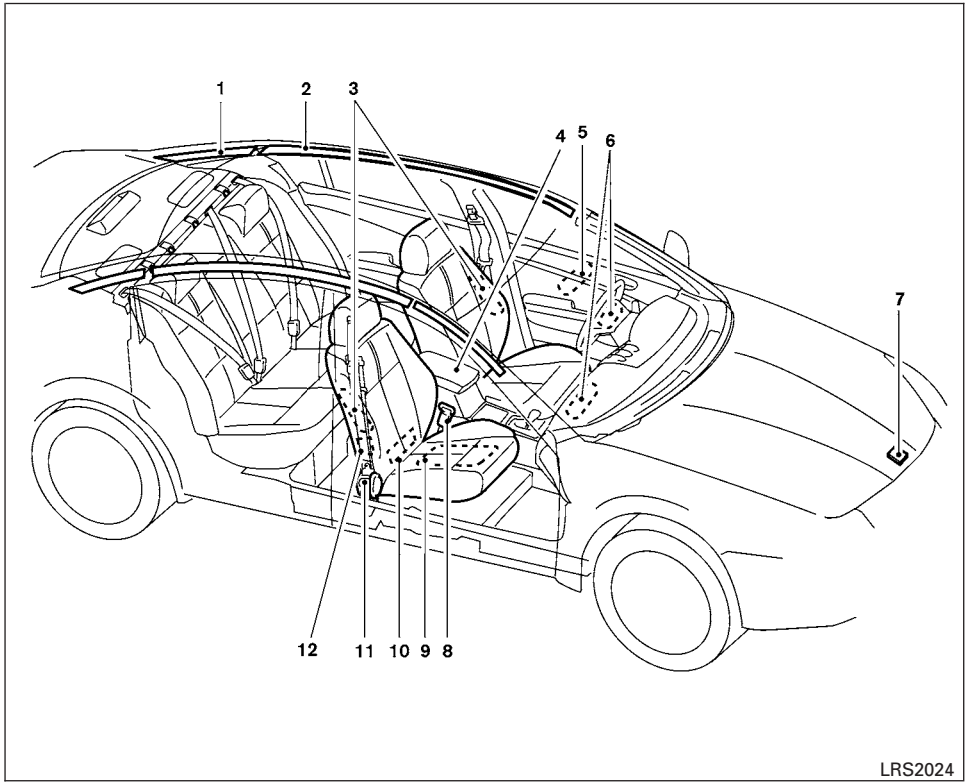

Sedan

1. Roof-mounted curtain side-impact supplemental air bag inflators
2. Roof-mounted curtain side-impact supplemental air bags
3. Front seat-mounted side-impact supplemental air bag modules
4. Air bag Control Unit (ACU)
5. Side-impact air bag pressure sensor (driver's side shown; passenger's side similar)
6. Supplemental front-impact air bag modules
7. Crash zone sensor
8. Seat belt buckle switches on driver's and passenger's side
9. Occupant classification sensor (pattern sensor)
10. Occupant classification system control unit
11. Seat belt with pretensioner
12. Side satellite sensor

NISSAN Advanced Air Bag System (front seats)

This vehicle is equipped with the NISSAN Advanced Air Bag System for the driver and front passenger seats. This system is designed to meet certification requirements under U.S. regulations. It is also permitted in Canada. **However, all of the information, cautions and warnings in this manual still apply and must be followed.**

The driver supplemental front-impact air bag is located in the center of the steering wheel. The passenger supplemental front-impact air bag is mounted in the dashboard above the glove box. The front air bags are designed to inflate in higher severity frontal collisions, although they may inflate if the forces in another type of collision are similar to those of a higher severity frontal impact. They may not inflate in certain frontal collisions. Vehicle damage (or lack of it) is not always an indication of proper front air bag system operation.

The NISSAN Advanced Air Bag System has dual stage air bag inflators. It also monitors information from the crash zone sensor, the Air bag Control Unit (ACU), seat belt buckle sensors and the occupant classification sensor (pattern sensor). Inflator operation is based on the severity of a collision and seat belt usage for the driver. For the front passenger, the occupant classification sensor is also monitored. Based on information from the sensors, only one front air bag may inflate in a crash, depending on the crash severity and whether the front occupants are belted or unbelted. Additionally, the front passenger air bag may be automatically turned OFF under some conditions, depending on the information provided by the occupant classification sensor. If the front passenger air bag is OFF, the passenger air bag status light will be illuminated (if the seat is unoccupied, the light will not be illuminated, but the air bag will be off). See “Front passenger air bag and status light” later in this section for further details. One front air bag inflating does not indicate improper performance of the system.

If you have any questions about your air bag system, please contact NISSAN or your NISSAN dealer. If you are considering modification of your vehicle due to a disability, you may also contact NISSAN. Contact information is contained in the front of this Owner’s Manual.

When a front air bag inflates, a fairly loud noise may be heard, followed by the release of smoke. This smoke is not harmful and does not indicate a fire. Care should be taken to not inhale it, as it may cause irritation and choking. Those with a history of a breathing condition should get fresh air promptly.

Front air bags, along with the use of seat belts, help to cushion the impact force on the face and chest of the front occupants. They can help save lives and reduce serious injuries. However, an inflating front air bag may cause facial abrasions or other injuries. Front air bags do not provide restraint to the lower body.

Even with NISSAN advanced air bags, seat belts should be correctly worn and the driver and passenger seated upright as far as practical away from the steering wheel or instrument panel. The front air bags inflate quickly in order to help protect the front occupants. Because of this, the force of the front air bag inflating can increase the risk of injury if the occupant is too close to, or is against, the front air bag module during inflation.

The front air bags deflate quickly after a collision.

The front air bags operate only when the ignition switch is in the ON position.

After placing the ignition switch in the ON position, the supplemental air bag warning light illuminates. The supplemental air bag warning light will turn off after about 7 seconds if the system is operational.

Front passenger air bag and status light

⚠ WARNING

The front passenger air bag is designed to automatically turn OFF under some conditions. Read this section carefully to learn how it operates. Proper use of the seat, seat belt and child restraints is necessary for most effective protection. Failure to follow all instructions in this manual concerning the use of seats, seat belts and child restraints can increase the risk or severity of injury in an accident.

Status light

The front passenger air bag status light is located on the instrument panel above the radio controls. The light operates as follows:

- Unoccupied passenger's seat: The is OFF and the front passenger air bag is OFF and will not inflate in a crash.
- Passenger's seat occupied by a small adult, child or child restraint as outlined in this section: The illuminates to indicate that the front passenger air bag is OFF and will not inflate in a crash.
- Occupied passenger seat and the passenger meets the conditions outlined in this section: The light is OFF to indicate that the front passenger air bag is operational.

Front passenger air bag

The front passenger air bag is designed to automatically turn OFF when the vehicle is operated under some conditions as described below in accordance with U.S. regulations. If the front passenger air bag is OFF, it will not inflate in a crash. The driver air bag and other air bags in your vehicle are not part of this system.

The purpose of the regulation is to help reduce the risk of injury or death from an inflating air bag to certain front passenger seat occupants, such as children, by requiring the air bag to be automatically turned OFF.

The occupant classification sensor (pattern sensor) is in the front passenger seat cushion and is designed to detect an occupant and objects on the seat. For example, if a child is in the front passenger seat, the Advanced Air Bag System is designed to turn the passenger air bag OFF in accordance with the regulations. Also, if a child restraint of the type specified in the regulations is on the seat, the occupant classification sensor can detect it and cause the air bag to turn OFF.

Front passenger seat adult occupants who are properly seated and using the seat belt as outlined in this manual should not cause the passenger air bag to be automatically turned OFF. For small adults it may be turned OFF, however if the occupant does not sit in the seat properly (for example, by not sitting upright, by sitting on an edge of the seat, or by otherwise being out of position), this could cause the sensor to turn the air bag OFF. Always be sure to be seated and wearing the seat belt properly for the most effective protection by the seat belt and supplemental air bag.

NISSAN recommends that pre-teens and children be properly restrained in a rear seat. NISSAN also recommends that appropriate child restraints and booster seats be properly installed in a rear seat. If this is not possible, the occupant classification sensor is designed to operate as described above to turn the front passenger air bag OFF for specified child restraints as required by the regulations. Failing to properly secure child restraints and to use the ALR mode (child restraint mode) may allow the restraint to tip or move in an accident or sudden stop. This can also result in the passenger air bag inflating in a crash instead of being OFF. See "Child restraints" earlier in this section for proper use and installation.

If the front passenger seat is not occupied, the passenger air bag is designed not to inflate in a crash. However, heavy objects placed on the seat could result in air bag inflation, because of the object being detected by the occupant classification sensor. Other conditions could also result in air bag inflation, such as if a child is standing on the seat, or if two children are on the seat, contrary to the instructions in this manual. Always be sure that you and all vehicle occupants are seated and restrained properly.

Using the passenger air bag status light, you can monitor when the front passenger air bag is automatically turned OFF with the seat occupied. The light will not illuminate when the front passenger seat is unoccupied.

If an adult occupant is in the seat but the passenger air bag status light is illuminated (indicating that the air bag is OFF), it could be that the person is a small adult, or is not sitting on the seat properly.

If a child restraint must be used in the front seat, the passenger air bag status light may or may not be illuminated, depending on the size of the child and the type of child restraint being used. If the air bag status light is not illuminated (indicating that the air bag might inflate in a crash), it could be that the child restraint or seat belt is not being used properly. Make sure that the child restraint is installed properly, the seat belt is used properly and the occupant is positioned properly. If the air bag status light is not illuminated, reposition the occupant or child restraint in a rear seat.

If the passenger air bag status light will not illuminate even though you believe that the child restraint, the seat belts and the occupant are properly positioned, the system may be sensing an unoccupied seat (in which case the air bag is OFF). Your NISSAN dealer can check that the system is OFF by using a special tool. However, until you have confirmed with your dealer that your air bag is working properly, reposition the occupant or child restraint in a rear seat.

The air bag system and passenger air bag status light will take a few seconds to register a change in the passenger seat status. However, if the seat becomes unoccupied, the air bag status light will remain off.

If a malfunction occurs in the front passenger air bag system, the supplemental air bag warning light , located in the meter and gauges area in the center of the instrument panel, will blink. Have the system checked by a NISSAN dealer.

Other supplemental front-impact air bag precautions

⚠ WARNING

- **Do not place any objects on the steering wheel pad or on the instrument panel. Also, do not place any objects between any occupant and the steering wheel or instrument panel. Such objects may become dangerous projectiles and cause injury if the front air bags inflate.**

- **Do not place objects with sharp edges on the seat. Also, do not place heavy objects on the seat that will leave permanent impressions in the seat. Such objects can damage the seat or occupant classification sensor (pattern sensor). This can affect the operation of the air bag system and result in serious personal injury.**
- **Do not use water or acidic cleaners (hot steam cleaners) on the seat. This can damage the seat or occupant classification sensor. This can also affect the operation of the air bag system and result in serious personal injury.**
- **Immediately after inflation, several front air bag system components will be hot. Do not touch them; you may severely burn yourself.**
- **No unauthorized changes should be made to any components or wiring of the supplemental air bag system. This is to prevent accidental inflation of the supplemental air bag or damage to the supplemental air bag system.**
- **Tampering with the front air bag system may result in serious personal injury. Tampering includes changes to the steering wheel and the instrument panel assembly by placing material over the steering wheel pad and above the instrument panel or by installing additional trim material around the air bag system.**
- **Modifying or tampering with the front passenger seat may result in serious personal injury. For example, do not change the front seats by placing material on the seat cushion or by installing additional trim material, such as seat covers, on the seat that are not specifically designed to assure proper air bag operation. Additionally, do not stow any objects under the front passenger seat or the seat cushion and seatback. Such objects may interfere with the proper operation of the occupant classification sensor.**
- **No unauthorized changes should be made to any components or wiring of the seat belt system. This may affect the front air bag system. Tampering with the seat belt system may result in serious personal injury.**
- **Work on and around the front air bag system should be done by a NISSAN dealer. Installation of electrical equipment should also be done by a NISSAN dealer. The Supplemental Restraint System (SRS) wiring should not be modified or disconnected. Unauthorized electrical test equipment and probing devices should not be used on the air bag system.**
- **A cracked windshield should be replaced immediately by a qualified repair facility. A cracked windshield could affect the function of the supplemental air bag system.**

***The SRS wiring harness connectors are yellow and orange for easy identification.**

When selling your vehicle, we request that you inform the buyer about the front air bag system and guide the buyer to the appropriate sections in this Owner's Manual.

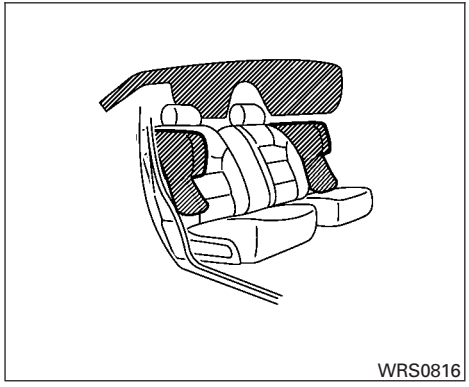

Front seat-mounted side-impact supplemental air bag and roof-mounted curtain side-impact supplemental air bag systems

The side air bags are located in the outside of the seatback of the front seats. The curtain air bags are located in the side roof rails. These systems are designed to meet voluntary guidelines to help reduce the risk of injury to out-of-position occupants. **However, all of the information, cautions and warnings in this manual still apply and must be followed.** The side air bags and curtain air bags are designed to inflate in higher severity side collisions, although they may inflate if the forces in another type of collision are similar to those of a higher severity side impact. They are designed to inflate on the side where the vehicle is impacted. They may not inflate in certain side collisions.

Vehicle damage (or lack of it) is not always an indication of proper side air bag and curtain air bag operation.

When the side air bags and curtain air bags inflate, a fairly loud noise may be heard, followed by the release of smoke. This smoke is not harmful and does not indicate a fire. Care should be taken not to inhale it, as it may cause irritation and choking. Those with a history of a breathing condition should get fresh air promptly.

Side air bags, along with the use of seat belts, help to cushion the impact force on the chest and pelvic area of the front occupants. Curtain air bags help to cushion the impact force to the head of occupants in the front and rear outboard seating positions. They can help save lives and reduce serious injuries. However, an inflating side air bag and curtain air bag may cause abrasions or other injuries. Side air bags and curtain air bags do not provide restraint to the lower body.

The seat belts should be correctly worn and the driver and passenger seated upright as far as practical away from the side air bag. Rear seat passengers should be seated as far away as practical from the door finishers and side roof rails. The side air bags and curtain air bags inflate quickly in order to help protect the occupants. Because of this, the force of the side air bag and curtain air bag inflating can increase the risk of injury if the occupant is too close to, or is against, these air bag modules during inflation. The side air bags and curtain air bag will deflate quickly after the collision is over.

The side air bags and curtain air bags operate only when the ignition switch is placed in the ON position.

After placing the ignition switch in the ON position, the supplemental air bag warning light illuminates. The supplemental air bag warning light will turn off after about 7 seconds if the system is operational.

⚠ WARNING

- **Do not place any objects near the seatback of the front seats. Also, do not place any objects (an umbrella, bag, etc.) between the front door finisher and the front seat. Such objects may become dangerous projectiles and cause injury if a side air bag inflates.**

- **Right after inflation, several side air bag and curtain air bag system components will be hot. Do not touch them; you may severely burn yourself.**
- **No unauthorized changes should be made to any components or wiring of the side air bag and curtain air bag systems. This is to prevent damage to or accidental inflation of the side air bag and curtain air bag or damage to the side air bag and curtain air bag systems.**
- **Do not make unauthorized changes to your vehicle's electrical system, suspension system or side panel. This could affect proper operation of the side air bag and curtain air bag systems.**
- **Tampering with the side air bag system may result in serious personal injury. For example, do not change the front seats by placing material near the seatbacks or by installing additional trim material, such as seat covers, around the side air bag.**
- **Work around and on the side air bag and curtain air bag system should be done by a NISSAN dealer. Installation of electrical equipment should also be done by a NISSAN dealer. The SRS wiring harnesses* should not be modified or disconnected. Unauthorized electrical test equipment and probing devices should not be used on the side air bag or curtain air bag system.**

*** The SRS wiring harness connectors are yellow and orange for easy identification.**

When selling your vehicle, we request that you inform the buyer about the side air bag and curtain air bag systems and guide the buyer to the appropriate sections in this Owner's Manual.

Seat belts with pretensioners (Front seats)

⚠ WARNING

- **The pretensioners cannot be reused after activation. They must be replaced together with the retractor and buckle as a unit.**
- **If the vehicle becomes involved in a frontal collision but a pretensioner is not activated, be sure to have the pretensioner system checked and, if necessary, replaced by your NISSAN dealer.**
- **No unauthorized changes should be made to any components or wiring of the pretensioner system. This is to prevent damage to or accidental activation of the pretensioners. Tampering with the pretensioner system may result in serious personal injury.**
- **Work around and on the pretensioner system should be done by a NISSAN dealer. Installation of electrical equipment should also be done by a NISSAN dealer. Unauthorized electrical test equipment and probing devices should not be used on the pretensioner system.**
- **If you need to dispose of a pretensioner or scrap the vehicle, contact a NISSAN dealer. Incorrect disposal procedures could cause personal injury.**

The pretensioner system activates in conjunction with the front air bag system. Working with the seat belt retractor, it helps tighten the seat belt when the vehicle becomes involved in certain types of collisions, helping to restrain front seat occupants.

The pretensioner is encased with the seat belt retractor. These seat belts are used the same way as conventional seat belts.

When a pretensioner activates, smoke is released and a loud noise may be heard. This smoke is not harmful and does not indicate a fire. Care should be taken not to inhale it, as it may cause irritation and choking. Those with a history of a breathing condition should get fresh air promptly.

After pretensioner activation, load limiters allow the seat belt to release webbing (if necessary) to reduce forces against the chest.

If any abnormality occurs in the pretensioner system, the supplemental air bag warning light will not come on, will flash intermittently or will turn on for 7 seconds and remain on after the ignition switch has been placed in the ON or START position. In this case, the pretensioner system may not function properly. It must be checked and repaired. Take your vehicle to the nearest NISSAN dealer.

When selling your vehicle, we request that you inform the buyer about the pretensioner system and guide the buyer to the appropriate sections in this Owner's Manual.

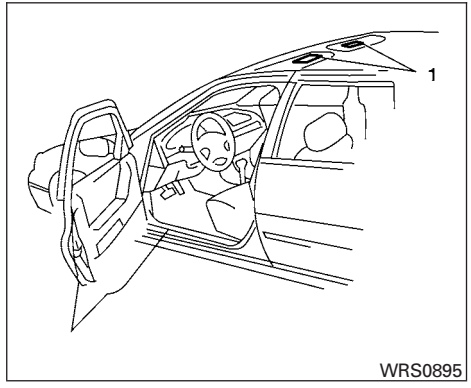

1. SRS Air Bag Warning Labels (located on the sun visors)

SUPPLEMENTAL AIR BAG WARNING LABELS

Warning labels about the supplemental front-impact air bag system are placed in the vehicle as shown in the illustration.

SUPPLEMENTAL AIR BAG WARNING LIGHT

The supplemental air bag warning light, displaying in the instrument panel, monitors the circuits of the supplemental front-impact air bag, front seat-mounted side-impact supplemental air bag, roof-mounted curtain side-impact supplemental air bag and seat belt pretensioner systems. The monitored circuits include the Air bag Control Unit (ACU), crash zone sensor, satellite sensors, side-impact air bag pressure sensors, occupant classification system, front air bag modules, side air bag modules, curtain air bag modules, pretensioners and all related wiring.

When the ignition is placed in the ON position, the supplemental air bag warning light illuminates for about 7 seconds and then turns off. This means the system is operational.

If any of the following conditions occur, the front air bag, side air bag and curtain air bag and pretensioner systems need servicing:

- The supplemental air bag warning light remains on after approximately 7 seconds.
- The supplemental air bag warning light flashes intermittently.
- The supplemental air bag warning light does not come on at all.

Under these conditions, the front air bag, side air bag and curtain air bag or pretensioner systems may not operate properly. They must be checked and repaired. Take your vehicle to the nearest NISSAN dealer.

⚠ WARNING

If the supplemental air bag warning light is on, it could mean that the front air bag, side air bag, curtain air bag and/or pretensioner systems will not operate in an accident. To help avoid injury to yourself or others, have your vehicle checked by a NISSAN dealer as soon as possible.

Repair and replacement procedure

The front air bags, side air bags, curtain air bags and pretensioners are designed to inflate on a one-time-only basis. As a reminder, unless it is damaged, the supplemental air bag warning light remains illuminated after inflation has occurred. Repair and replacement of these supplemental air bag systems should be done only by a NISSAN dealer.

When maintenance work is required on the vehicle, the front air bags, side air bags, curtain air bags, pretensioners and related parts should be pointed out to the person performing the maintenance. The ignition should always be in the LOCK position when working under the hood or inside the vehicle.

⚠ WARNING

- **Once a front air bag, side air bag, or curtain air bag has inflated, the air bag module will not function again and must be replaced. Additionally, if any of the front air bags inflate, the activated pretensioners must also be replaced. The air bag module and pretensioners should be replaced by a NISSAN dealer. The air bag module and pretensioners cannot be repaired.**

- **The front air bag, side air bag, curtain air bag systems and the pretensioner system should be inspected by a NISSAN dealer if there is any damage to the front end or side portion of the vehicle.**
- **If you need to dispose of a supplemental air bag or pretensioners or scrap the vehicle, contact a NISSAN dealer. Incorrect disposal procedures could cause personal injury.**

MEMO

2 Instruments and controls

Instrument panel 2-2
Meters and gauges 2-3
Speedometer and odometer 2-4
Tachometer 2-5
Engine coolant temperature gauge 2-5
Fuel gauge 2-6
Compass display (if so equipped) 2-6
Compass display 2-7
Warning/indicator lights and audible reminders 2-10
Checking bulbs 2-10
Warning lights 2-11
Indicator lights 2-14
Audible reminders 2-16
Vehicle information display 2-17
How to use the Vehicle Information Display 2-17
Security systems 2-26
Vehicle security system 2-26
NISSAN vehicle immobilizer system 2-27
Windshield wiper and washer switch 2-28
Switch operation 2-28
Rear window and outside mirror (if so equipped) defroster switch 2-29
Headlight and turn signal switch 2-29
Xenon headlights (if so equipped) 2-29
Headlight control switch 2-31
Daytime running light system (Canada only) 2-32
Instrument brightness control 2-33
Turn signal switch 2-33
Fog light switch (if so equipped) 2-34
Hazard warning flasher switch 2-34
Horn 2-35
Heated seat (if so equipped) 2-35
Vehicle Dynamic Control (VDC) off switch 2-36
Power outlet 2-36
Storage 2-37
Map pockets 2-37
Seatback pockets (if so equipped) 2-37
Storage pouch (if so equipped) 2-38
Sunglasses holder 2-38
Cup holders 2-40
Glove box 2-41
Console box 2-41
Storage box (if so equipped) 2-42
Covered storage box 2-42
Grocery hooks 2-42
Cargo net (if so equipped) 2-43

Windows 2-43
Power windows 2-43
Moonroof (if so equipped) 2-46
Automatic moonroof 2-46
Interior light 2-49
Console light (if so equipped) 2-50
Personal Lights 2-50
Map lights 2-50
Trunk light 2-51
HomeLink® universal transceiver (if so equipped) 2-51
Programming HomeLink® 2-52
Programming HomeLink® for Canadian customers 2-53
Operating the HomeLink® universal transceiver 2-53
Programming trouble-diagnosis 2-53
Clearing the programmed information 2-53
Rolling code programming 2-54
Reprogramming a single HomeLink® button 2-54
If your vehicle is stolen 2-54

INSTRUMENT PANEL

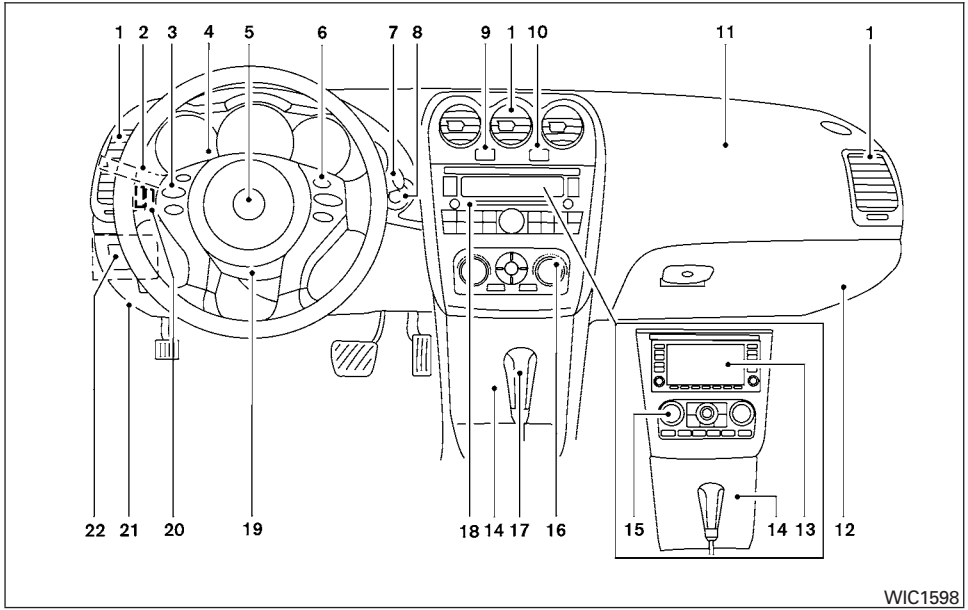

1. Vents (P. 4-18)
2. Headlight/fog light (if so equipped)/turn signal switch (P. 2-29)
3. Steering wheel switch for audio control (if so equipped)/Bluetooth® Hands-free Phone System (if so equipped) (P. 4-95, P. 4-91, P. 4-106)
4. Meters and gauges (P. 2-3)
5. Driver supplemental air bag/horn (P. 1-41, P. 2-35)
6. Cruise control main/set switch (P. 5-20)
7. Windshield wiper and washer switch (P. 2-28)
8. Ignition switch (P. 5-7)
9. Hazard warning flasher switch (P. 2-34)
10. Front passenger air bag status light (P. 1-51)
11. Front passenger supplemental air bag (P. 1-41)
12. Glove box (P. 2-41)
13. Navigation system* (if so equipped) (P. 4-2)
14. Covered storage box (P. 2-42)
15. Heater and air conditioner (automatic) (P. 4-26)
16. Heater and air conditioner (manual) (P. 4-19)
17. Shift selector (P. 5-11)
18. Audio system controls (if so equipped)/ Storage (if so equipped) (P. 4-29, P.2-42)
19. Tilt/telescopic steering wheel controls (P. 3-28)

20. Vehicle information display controls (P. 2-17)
21. Hood release (P. 3-23)
22. Trunk opener (P. 3-23)
    Vehicle Dynamic Control (VDC) OFF switch (P. 2-36)
    NISSAN Intelligent Key™ port (P. 5-7)

*: Refer to the separate Navigation System Owner's Manual (if so equipped).

See the page number indicated in parentheses for operating details.

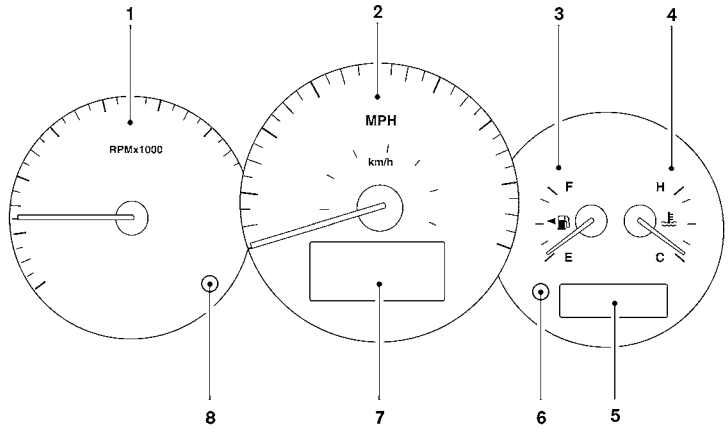

WIC1259

1. Tachometer
2. Speedometer
3. Fuel gauge
4. Engine coolant temperature gauge
5. Odometer/twin trip odometer
6. Twin trip odometer change button
7. Vehicle information display
8. Instrument brightness control

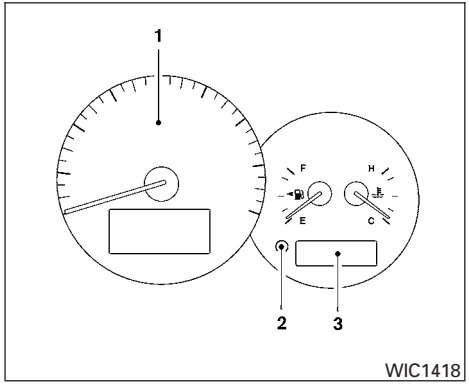

1. Speedometer
2. Change button
3. Odometer/twin trip odometer

SPEEDOMETER AND ODOMETER

Speedometer

The speedometer ① indicates vehicle speed in miles per hour (MPH) and kilometers per hour (km/h).

Odometer/Twin trip odometer

The odometer/twin trip odometer is displayed when the ignition switch is placed in the ON position.

The odometer records the total distance the vehicle has been driven.

The twin trip odometer records the distance of individual trips.

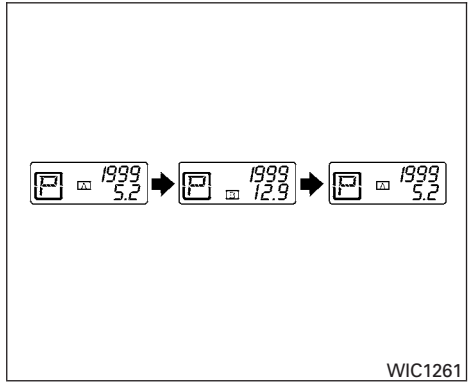

Changing the display:

Pushing the change button changes the display as follows:

Trip **A** → Trip **B** → Trip **A**

Resetting the trip odometer:

Pushing the change button for more than 1 second resets the currently displayed trip odometer to zero.

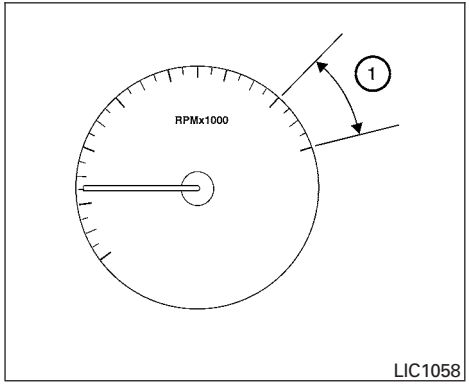

TACHOMETER

The tachometer indicates engine speed in revolutions per minute (rpm). Do not rev engine into the red zone ①.

⚠CAUTION

When engine speed approaches the red zone, shift to a higher gear or reduce engine speed. Operating the engine in the red zone may cause serious engine damage.

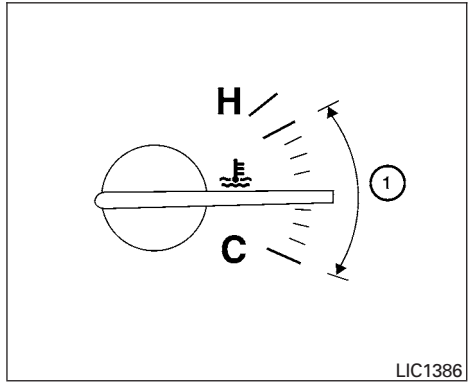

ENGINE COOLANT TEMPERATURE GAUGE

The gauge indicates the engine coolant temperature. The engine coolant temperature is within the normal range ① when the gauge needle points within the zone shown in the illustration.

The engine coolant temperature varies with the outside air temperature and driving conditions.

⚠CAUTION

If the gauge indicates coolant temperature near the hot (H) end of the normal range, reduce vehicle speed to decrease temperature. If the gauge is over the normal range, stop the vehicle as soon as safely possible. If the engine is overheated, continued operation of the vehicle may seriously damage the engine. See "If your vehicle overheats" in the "In case of emergency" section for immediate action required.

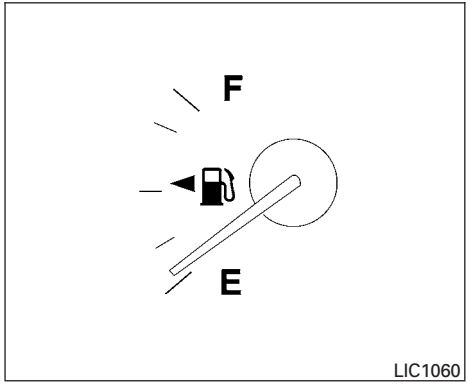

FUEL GAUGE

The gauge indicates the **approximate** fuel level in the tank.

The gauge may move slightly during braking, turning, acceleration, or going up or down hills.

The gauge needle returns to E (Empty) after the ignition switch is placed in the OFF position.

The low fuel warning light comes on when the amount of fuel in the tank is getting low.

Refill the fuel tank before the gauge registers E (Empty).

The ◀⛽ indicates that the fuel-filler door is located on the driver's side of the vehicle.

⚠ CAUTION

- **If the vehicle runs out of fuel, the SERVICE ENGINE SOON Malfunction Indicator Light (MIL) may come on. Refuel as soon as possible. After a few driving trips, the SERVICE ENGINE SOON light should turn off. If the light remains on after a few driving trips, have the vehicle inspected by a NISSAN dealer.**
- **For additional information, see "Malfunction Indicator Light (MIL)" later in this section.**

This unit measures terrestrial magnetism and indicates the direction of the vehicle's heading.

With the ignition switch placed in the ON position, press the -N- button as described in the chart below to activate various features of the automatic anti-glare rearview mirror.

Push and hold the -N- button for about:	Feature: (Push button again for about 1 second to change settings)
1 second	Compass display toggles on/off
5 seconds	Compass zone can be changed to correct false compass readings
9 seconds	Compass enters calibration mode

For information about the automatic anti-glare feature, refer to "Automatic anti-glare rearview mirror" in the "Pre-driving checks and adjustments" section.

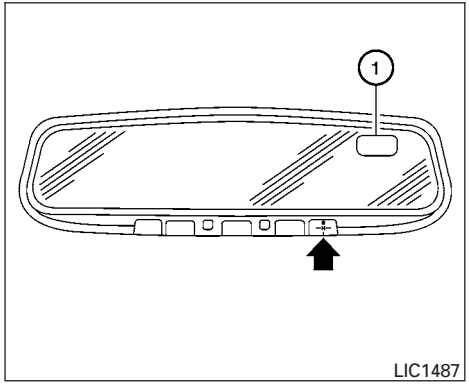

Press the button for about 1 second when the ignition switch is placed in the ON position to toggle the compass display ① on or off. The display will indicate the direction of the vehicle's heading.

N: North
E: East
S: South
W: West

If the display reads "C", calibrate the compass by driving the vehicle in three complete circles at less than 5 MPH (8 km/h).

You can also calibrate the compass by driving your vehicle on your everyday route. The compass will be calibrated once it has tracked three complete circles.

COMPASS DISPLAY

Press the button when the ignition switch is placed in the ON position. The direction will be displayed.

Zone variation change procedure

The difference between magnetic north and geographical north is known as variance. In some areas, this difference can sometimes be great enough to cause false compass readings. Follow these instructions to set the variance for your particular location if this happens:

1. Establish your location on the zone map. Refer to the illustration. Record your zone number.
2. Place the ignition switch in the ON position.
3. Press the button in for 5 seconds until the current zone entry number is displayed.
4. Press the button repeatedly until the desired zone entry number is displayed.

Once the desired zone number is displayed, stop pressing the button and the display will show compass direction within a few seconds.

NOTE:

Use zone number 5 for Hawaii.

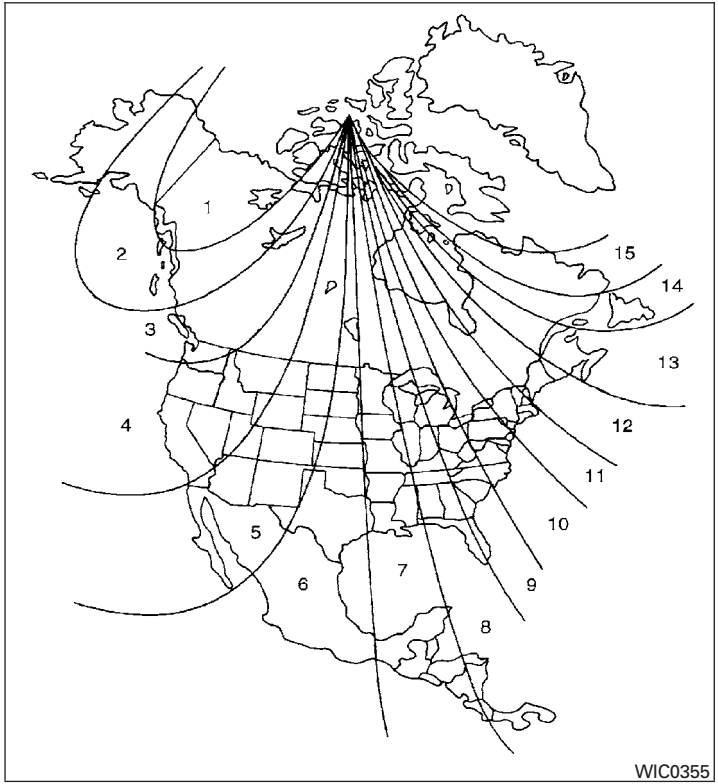

- **If a magnet is located near the compass or the vehicle is driven where the terrestrial magnetism is disturbed, the compass display may not indicate the correct direction.**
- **In places where the terrestrial magnetism is disturbed, the correction of the direction starts automatically.**

Inaccurate compass direction:

The compass display is equipped with automatic correction function. If the correct direction is not shown, follow this procedure.

1. With the display turned on, press and hold the -N- switch for about 9 seconds. The display will read “C.”
2. Calibrate the compass by driving the vehicle in three complete circles at a maximum speed of 5 MPH (8 km/h).
3. After completing the circles the display should return to normal.

- If the compass deviates from the correct indication soon after repeated adjustment, have the compass checked at an authorized NISSAN dealer.

- The compass may not indicate the correct compass point in tunnels or while driving up or down a steep hill. (The compass returns to the correct compass point when the vehicle moves to an area where the geomagnetism is stabilized.)

⚠ CAUTION

- **Do not install a ski rack, antenna, etc., which are attached to the vehicle by means of a magnet. They affect the operation of the compass.**
- **When cleaning the mirror, use a paper towel or similar material dampened with glass cleaner. Do not spray glass cleaner directly on the mirror as it may cause the liquid cleaner to enter the mirror housing.**

WARNING/INDICATOR LIGHTS AND AUDIBLE REMINDERS

ABS or (ABS) Anti-lock Braking System (ABS) warning light	Seat belt warning light and chime	SERVICE ENGINE SOON Malfunction Indicator Light (MIL)
BRAKE or (!) Brake warning light	Supplemental air bag warning light	Security indicator light
Charge warning light	P Continuously Variable Transmission (CVT) position indicator light (if so equipped)	Slip indicator light
AT CHECK Continuously Variable Transmission (CVT) check warning light (if so equipped)	CRUISE Cruise main switch indicator light	Turn signal/hazard indicator lights
Engine oil pressure warning light	SET Cruise set switch indicator light	OFF Vehicle Dynamic Control (VDC) OFF indicator light
Low tire pressure warning light	OFF 2 Front passenger air bag status light	
Master warning light	High beam indicator light (blue)	

CHECKING BULBS

With all doors closed, apply the parking brake and place the ignition switch in the ON position without starting the engine. The following lights will come on:

, BRAKE or (!) , , SERVICE ENGINE SOON , , ⚠

The following lights come on briefly and then go off:

ABS or (ABS) , , OFF , , AT CHECK

If any light fails to come on, it may indicate a burned-out bulb or an open circuit in the electrical system. Have the system repaired promptly.

WARNING LIGHTS

ABS or Anti-lock Braking System (ABS) warning light

When the ignition switch is placed in the ON position, the Anti-lock Braking System (ABS) warning light illuminates and then turns off. This indicates the ABS is operational.

If the ABS warning light illuminates while the engine is running, or while driving, it may indicate the ABS is not functioning properly. Have the system checked by a NISSAN dealer.

If an ABS malfunction occurs, the anti-lock function is turned off. The brake system then operates normally, but without anti-lock assistance. See "Brake system" in the "Starting and driving" section.

BRAKE or Brake warning light

This light functions for both the parking brake and the foot brake systems.

Parking brake indicator

When the ignition switch is placed in the ON position, the light comes on when the parking brake is applied.

Low brake fluid warning light

When the ignition switch is placed in the ON position, the light warns of a low brake fluid level. If the light comes on while the engine is running with the parking brake not applied, stop the vehicle and perform the following:

1. Check the brake fluid level. Add brake fluid as necessary. See "Brake fluid" in the "Maintenance and do-it-yourself" section of this manual.
2. If the brake fluid level is correct, have the warning system checked by a NISSAN dealer.

WARNING

- **Your brake system may not be working properly if the warning light is on. Driving could be dangerous. If you judge it to be safe, drive carefully to the nearest service station for repairs. Otherwise, have your vehicle towed because driving it could be dangerous.**
- **Pressing the brake pedal with the engine stopped and/or a low brake fluid level may increase your stopping distance and braking will require greater pedal effort as well as pedal travel.**
- **If the brake fluid level is below the MINIMUM or MIN mark on the brake fluid reservoir, do not drive until the brake system has been checked at a NISSAN dealer.**

Anti-lock Braking System (ABS) warning indicator

When the parking brake is released and the brake fluid level is sufficient, if both the brake warning light and the Anti-lock Braking System (ABS) warning light illuminate, it may indicate the ABS is not functioning properly. Have the brake system checked, and if necessary, repaired by a NISSAN dealer promptly. Avoid high-speed driving and abrupt braking. (See "Anti-lock Braking System (ABS) warning light" in this section.)

Charge warning light

If this light comes on while the engine is running, it may indicate the charging system is not functioning properly. Turn the engine off and check the generator belt. If the belt is loose, broken, missing, or if the light remains on, see a NISSAN dealer immediately.

⚠ CAUTION

- **Do not ground electrical accessories directly to the battery terminal. Doing so will bypass the variable control system and the vehicle battery may not charge completely. Refer to "Variable voltage control system" in the "Maintenance and do-it-yourself" section later in this manual.**
- **Do not continue driving if the generator belt is loose, broken or missing.**

Continuously Variable Transmission (CVT) check warning light (if so equipped)

When the ignition switch is placed in the ON position, the light comes on for about 2 seconds. If the light comes on at any other time, it may indicate the CVT system is not functioning properly. Have the system checked by a NISSAN dealer.

Engine oil pressure warning light

This light warns of low engine oil pressure. If the light flickers or comes on during normal driving, pull off the road in a safe area, stop the engine **immediately** and call a NISSAN dealer or other authorized repair shop.

The engine oil pressure warning light is not designed to indicate a low oil level. Use the dipstick to check the oil level. See "Engine oil" in the "Maintenance and do-it-yourself" section of this manual.

⚠ CAUTION

Running the engine with the engine oil pressure warning light on could cause serious damage to the engine almost immediately. Such damage is not covered by warranty. Turn off the engine as soon as it is safe to do so.

Low tire pressure warning light

Your vehicle is equipped with a Tire Pressure Monitoring System (TPMS) that monitors the tire pressure of all tires except the spare.

The low tire pressure warning light warns of low tire pressure or indicates that the TPMS is not functioning properly.

After the ignition switch is placed in the ON position, this light illuminates for about 1 second and turns off.

Low tire pressure warning:

If the vehicle is being driven with low tire pressure, the warning light will illuminate. A CHECK TIRE PRESSURE warning also appears in the vehicle information display.

When the low tire pressure warning light illuminates, you should stop and adjust the tire pressure of all 4 tires to the recommended COLD tire pressure shown on the Tire and Loading Information label located in the driver's door opening. The low tire pressure warning light does not automatically turn off when the tire pressure is adjusted. After the tire is inflated to the recommended pressure, the vehicle must be driven at speeds above 16 MPH (25 km/h) to activate the TPMS and turn off the low tire pressure warning light. Use a tire pressure gauge to check the tire pressure.

The CHECK TIRE PRESSURE warning is active as long as the low tire pressure warning light remains illuminated.

For additional information, see "Vehicle information display" in the "Instruments and controls" section and "Tire Pressure Monitoring System (TPMS)" in the "Starting and driving" section and in the "In case of emergency" section.

TPMS malfunction:

If the TPMS is not functioning properly, the low tire pressure warning light will flash for approximately 1 minute when the ignition switch is placed in the ON position. The light will remain on after the 1 minute. Have the system checked by a NISSAN dealer. The CHECK TIRE PRESSURE warning does not appear if the low tire pressure warning light illuminates to indicate a TPMS malfunction.

For additional information, see “Tire Pressure Monitoring System (TPMS)” in the “Starting and driving” section and “Tire pressure” in the “Maintenance and do-it-yourself” section.

WARNING

- **If the light does not illuminate with the ignition switch placed in the ON position, have the vehicle checked by a NISSAN dealer as soon as possible.**
- **If the light illuminates while driving, avoid sudden steering maneuvers or abrupt braking, reduce vehicle speed, pull off the road to a safe location and stop the vehicle as soon as possible. Driving with under-inflated tires may permanently damage the tires and increase the likelihood of tire failure. Serious vehicle damage could occur and may lead to an accident and could result in serious personal injury. Check the tire pressure for all four tires. Adjust the tire pressure to the recommended COLD tire pressure shown on the Tire and Loading Information label located in the driver’s door opening to turn the low tire pressure warning light OFF. If the light still illuminates while driving after adjusting the tire pressure, a tire may be flat. If you have a flat tire, replace it with a spare tire as soon as possible.**
- **When a spare tire is mounted or a wheel is replaced tire pressure will not be indicated, the TPMS will not function and the low tire pressure warning light will flash for approximately 1 minute. The light will remain on after 1 minute. Contact your NISSAN dealer as soon as possible for tire replacement and/or system resetting.**
- **Replacing tires with those not originally specified by NISSAN could affect the proper operation of the TPMS.**

CAUTION

- **The TPMS is not a substitute for the regular tire pressure check. Be sure to check the tire pressure regularly.**
- **If the vehicle is being driven at speeds of less than 16 MPH (25 km/h), the TPMS may not operate correctly.**
- **Be sure to install the specified size of tires to the 4 wheels correctly.**

Master warning light

This light comes on when various vehicle information display warnings appear.

Seat belt warning light and chime

The light and chime remind you to fasten your seat belts. The light illuminates whenever the ignition switch is placed in the ON or START position and remains illuminated until the driver's seat belt is fastened. At the same time, the chime sounds for about 6 seconds unless the driver's seat belt is securely fastened.

The seat belt warning light may also illuminate if the front passenger's seat belt is not fastened when the front passenger's seat is occupied. For 7 seconds after the ignition switch is placed in the ON position, the system does not activate the warning light for the front passenger.

Refer to "Seat belts" in the "Safety—Seats, seat belts and supplemental restraint system" section for precautions on seat belt usage.

Supplemental air bag warning light

When the ignition switch is placed in the ON or START position, the supplemental air bag warning light illuminates for about 7 seconds and then turns off. This means the system is operational.

If any of the following conditions occur, the front air bag, side air bag, curtain air bag, and pretensioner systems need servicing and your vehicle must be taken to a NISSAN dealer:

- The supplemental air bag warning light remains on after approximately 7 seconds.
- The supplemental air bag warning light flashes intermittently.
- The supplemental air bag warning light does not come on at all.

Unless checked and repaired, the supplemental restraint system (air bag system) and/or the pretensioners may not function properly. For additional details, see "Supplemental restraint system" in the "Safety—Seats, seat belts and supplemental restraint system" section of this manual.

WARNING

If the supplemental air bag warning light is on, it could mean that the front air bag, side air bag, curtain air bag systems and/or pretensioner systems will not operate in an accident. To help avoid injury to yourself or others, have your vehicle checked by a NISSAN dealer as soon as possible.

INDICATOR LIGHTS

For additional information on warnings and indicators, see "Vehicle information display" later in this section.

Continuously Variable Transmission (CVT) position indicator light (if so equipped)

When the ignition switch is placed in the ON position, this indicator light shows the shift selector position. See "Driving the vehicle" in the "Starting and driving" section of this manual.

Cruise main switch indicator light

The light comes on when the cruise control main switch is pushed. The light goes out when the main switch is pushed again. When the cruise main switch indicator light comes on, the cruise control system is operational.

SET Cruise set switch indicator light

The light comes on while the vehicle speed is controlled by the cruise control system. If the light blinks while the engine is running, it may indicate the cruise control system is not functioning properly. Have the system checked by a NISSAN dealer.

Front passenger air bag status light

The front passenger air bag status light ( ) will be lit and the passenger front air bag will be OFF depending on how the front passenger seat is being used.

For front passenger air bag status light operation, see “Front passenger air bag and status light” in the “Safety — Seats, seat belts and supplemental restraint system” section of this manual.

High beam indicator light (blue)

This blue light comes on when the headlight high beams are on and goes out when the low beams are selected.

The high beam indicator light also comes on when the passing signal is activated.

SERVICE ENGINE SOON Malfunction Indicator Light (MIL)

If this indicator light comes on steady or blinks while the engine is running, it may indicate a potential emission control malfunction.

The Malfunction Indicator Light may also come on steady if the fuel-filler cap is loose or missing, or if the vehicle runs out of fuel. Check to make sure the fuel-filler cap is installed and closed tightly, and that the vehicle has at least 3 gallons (11.4 liters) of fuel in the fuel tank.

After a few driving trips, the SERVICE ENGINE SOON light should turn off if no other potential emission control system malfunction exists.

If this indicator light comes on steady for 20 seconds and then blinks for 10 seconds when the engine is not running, it indicates that the vehicle is not ready for an emission control system inspection/maintenance test. See “Readiness for inspection/maintenance (I/M) test” in the “Technical and consumer information” section of this manual.

Operation

The Malfunction Indicator Light will come on in one of two ways:

- Malfunction Indicator Light on steady — An emission control system malfunction has been detected. Check the fuel-filler cap if the LOOSE FUEL CAP warning appears in the vehicle information display. If the fuel-filler cap is loose or missing, tighten or install the cap and continue to drive the vehicle. The SERVICE ENGINE SOON light should turn off after a few driving trips. If the SERVICE ENGINE SOON light does not turn off after a few driving trips, have the vehicle inspected by a NISSAN dealer. You do not need to have your vehicle towed to the dealer.
- Malfunction Indicator Light blinking — An engine misfire has been detected which may damage the emission control system. To reduce or avoid emission control system damage:
  - do not drive at speeds above 45 MPH (72 km/h).
  - avoid hard acceleration or deceleration.
  - avoid steep uphill grades.
  - if possible, reduce the amount of cargo being hauled or towed.

The Malfunction Indicator Light may stop blinking and come on steady. Have the vehicle inspected by a NISSAN dealer. You do not need to have your vehicle towed to the dealer.

⚠ CAUTION

Continued vehicle operation without having the emission control system checked and repaired as necessary could lead to poor driveability, reduced fuel economy, and possible damage to the emission control system.

Security indicator light

This light blinks when the ignition switch is placed in the OFF, LOCK or ACC position.

The blinking security indicator light indicates that the security systems equipped on the vehicle are operational.

For additional information, see “Security systems” later in this section.

Slip indicator light

This indicator will blink when the VDC system or the traction control system is operating, thus alerting that the vehicle is nearing its traction limits. The road surface may be slippery.

Turn signal/hazard indicator lights

The appropriate light flashes when the turn signal switch is activated.

Both lights flash when the hazard switch is turned on.

Vehicle Dynamic Control (VDC) OFF indicator light

This indicator light comes on when the Vehicle Dynamic Control off switch is pushed to OFF. This indicates the Vehicle Dynamic Control has been turned off.

Push the Vehicle Dynamic Control off switch again or restart the engine and the system will be reactivated. See “Vehicle Dynamic Control (VDC) system” in the “Starting and driving” section of this manual.

The Vehicle Dynamic Control light also comes on when you push the push-button ignition switch to the ON position. The light will turn off after about 2 seconds if the system is operational. If the light stays on or comes on along with the indicator light while you are driving, have the Vehicle Dynamic Control system checked by a NISSAN dealer.

While the Vehicle Dynamic Control system is operating, you might feel slight vibration or hear the system working when starting the vehicle or accelerating, but this is normal.

AUDIBLE REMINDERS

Brake pad wear warning

The disc brake pads have audible wear warnings. When a disc brake pad requires replacement, it makes a high pitched scraping sound when the vehicle is in motion, whether or not the brake pedal is depressed. Have the brakes checked as soon as possible if the warning sound is heard.

Key reminder chime

A chime sounds if the driver’s door is opened while the ignition switch is placed in the ACC or OFF position or placed in the OFF or LOCK position with the Intelligent Key left in the Intelligent Key port. Make sure the ignition switch is placed in the LOCK position, and take the Intelligent Key with you when leaving the vehicle.

Light reminder chime

With the ignition switch placed in the OFF position, a chime sounds when the driver’s door is opened if the headlights or parking lights are on.

Turn the headlight control switch off before leaving the vehicle.

NISSAN Intelligent Key™ door buzzer

The Intelligent Key door buzzer sounds if the Intelligent Key is left inside the vehicle when locking the doors. When the buzzer sounds, be sure to check both the vehicle and the Intelligent Key. See “NISSAN Intelligent Key™ ” in the “Pre-driving checks and adjustments” section.

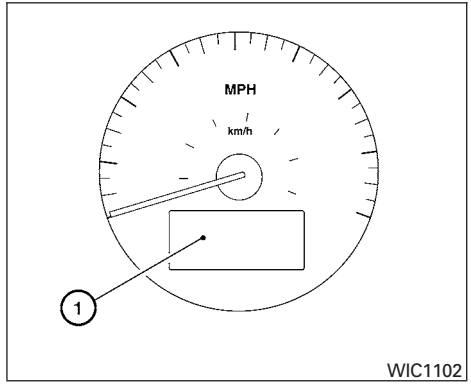

WIC1102

The vehicle information display ① is located on the bottom of the speedometer. It displays such items as:

- Intelligent Key operation information
- some indicators and warnings
- other information

For details about the Intelligent Key, see “NISSAN Intelligent Key™” in the “Pre-driving checks and adjustments” section.

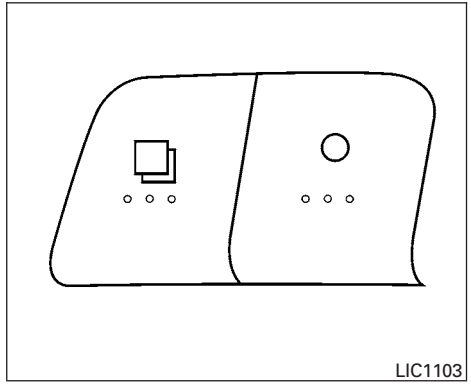
LIC1103

HOW TO USE THE VEHICLE INFORMATION DISPLAY

Press the ❑ button, located on the instrument panel just behind the steering wheel, to display the following modes:

MPG→ MPG/MPH → Time/Miles → Range → Exterior Temperature → Setting → Warning

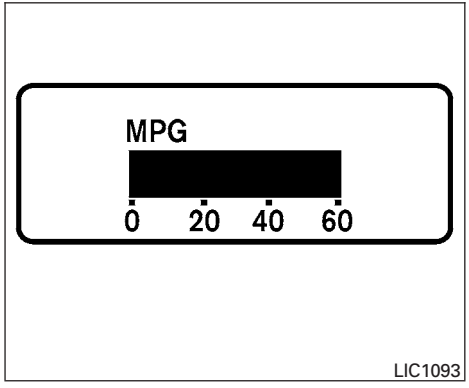

Fuel economy mode

The fuel economy mode can be selected to display the instant fuel economy since the last reset.

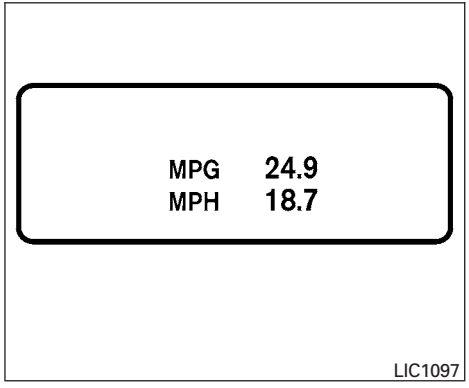

Average speed mode

The average speed mode can be selected to display the average miles per gallon and miles per hour since the last reset.

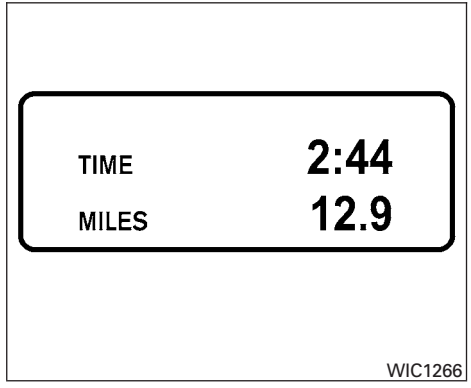

Time/Miles (km) mode

The time/miles (km) mode can be selected to show the time and distance driven since the last reset.

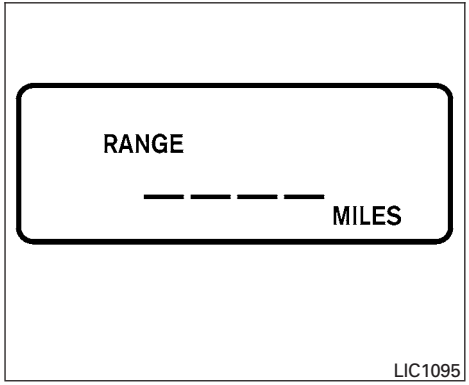

Range mode

The range mode can be selected to give you an estimation of the distance that can be driven before refueling. The range is constantly calculated based on the amount of fuel in the fuel tank and the actual fuel consumption.

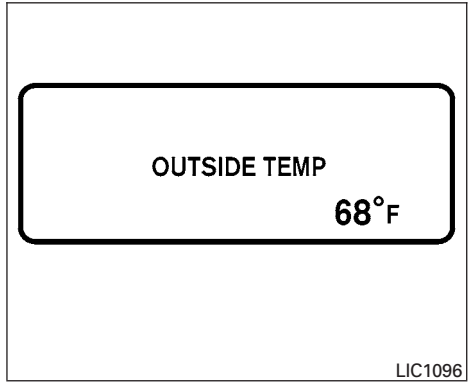

Exterior temperature mode

The exterior temperature mode can be selected to provide you with the temperature outside of your vehicle.

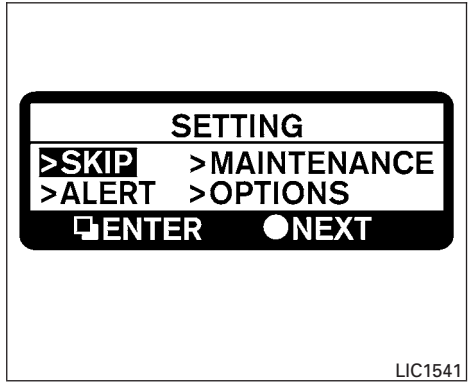

Setting mode

The setting mode allows you to set reminders or preferences for alerts, maintenance intervals or language displays.

In the setting mode screen press ○ to move to:

- Alert
- Maintenance
- Options

and press ❑ to select the menu.

LIC1544

Alert mode

The alert mode allows you to set alerts notifying you of time to rest or icy conditions.

The time to rest alert lets you know when you have been traveling for a long time and may need a break.

The icy alert notifies you that icy driving conditions may exist.

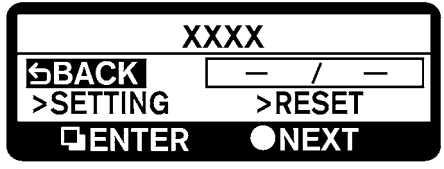

LIC1046

Reset mode

The reset mode can be selected in any screen that allows for preferences to be programmed. Once the screen is selected, you have the option to reset the selected distances or time to a new setting.

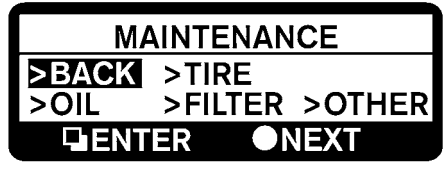

LIC1545

Maintenance mode

The maintenance mode allows you to set alerts for the reminding of maintenance intervals for the following:

- tires
- oil
- filter
- other

Set a desired interval by pushing ○ to highlight the maintenance field and pressing ❑ . The reset mode will open up and allow you to enter the desired distance.

For additional information, see “Indicators for maintenance” later in this section.

LIC1546

Options mode

The LANGUAGE/UNIT screen will appear when selecting the “Language/Unit” key and pressing ❑ .

Language: English or French

Unit: US — mile, °F, MPG
Metric — km, °C, l/km

You can select the language and unit using the ○ button and pressing ❑ .

The settings are automatically saved when you exit the menu by pressing the BACK button or any other mode button.

LIC1098

Warning mode

The warning mode can be selected to view any warnings that may be present. Once the screen is selected you have the option of skipping the warning or viewing it in detail.

Warnings can be present for issues such as an open door or low fuel. For more information about potential warnings see “Vehicle information display warnings and indicators” later in this section.

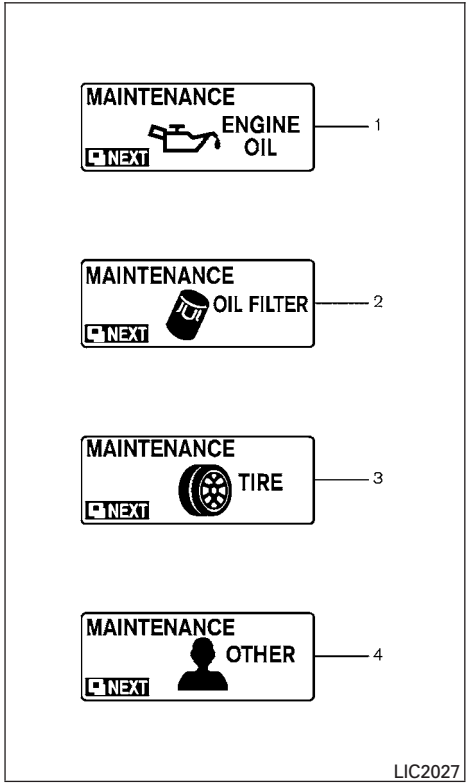

Indicators for maintenance

1. Engine oil replacement indicator
   This indicator appears when the customer set distance comes for changing the engine oil. You can set or reset the distance for changing the engine oil. See “Maintenance mode” earlier in this section.
2. Oil filter replacement indicator
   This indicator appears when the customer set distance comes for replacing the oil filter. You can set or reset the distance for replacing the oil filter. See “Maintenance mode” earlier in this section.
3. Tire replacement indicator
   This indicator appears when the customer set distance comes for replacing tires. You can set or reset the distance for replacing tires. See “Maintenance mode” earlier in this section.

⚠ WARNING

The tire replacement indicator is not a substitute for regular tire checks, including tire pressure checks. See “Changing Wheels and Tires” in “Maintenance & Do-It-Yourself” section. Many factors including tire inflation, alignment, driving habits and road conditions affect tire wear and when tires should be replaced. Setting the tire replacement indicator for a certain driving distance does not mean your tires will last that long. Use the tire replacement indicator as a guide only and always perform regular tire checks. Failure to perform regular tire checks, including tire pressure checks could result in tire failure. Serious vehicle damage could occur and may lead to a collision, which could result in serious personal injury or death.

4. “OTHER” indicator
   This indicator appears when the customer set distance comes for checking or replacing maintenance items other than the engine oil, oil filter and tires. Other maintenance items can include such things as air filter or tire rotation. You can set or reset the distance for checking or replacing the items. See “Maintenance mode” earlier in this section. For scheduled maintenance items and intervals, see your “NISSAN Service and Maintenance Guide.”

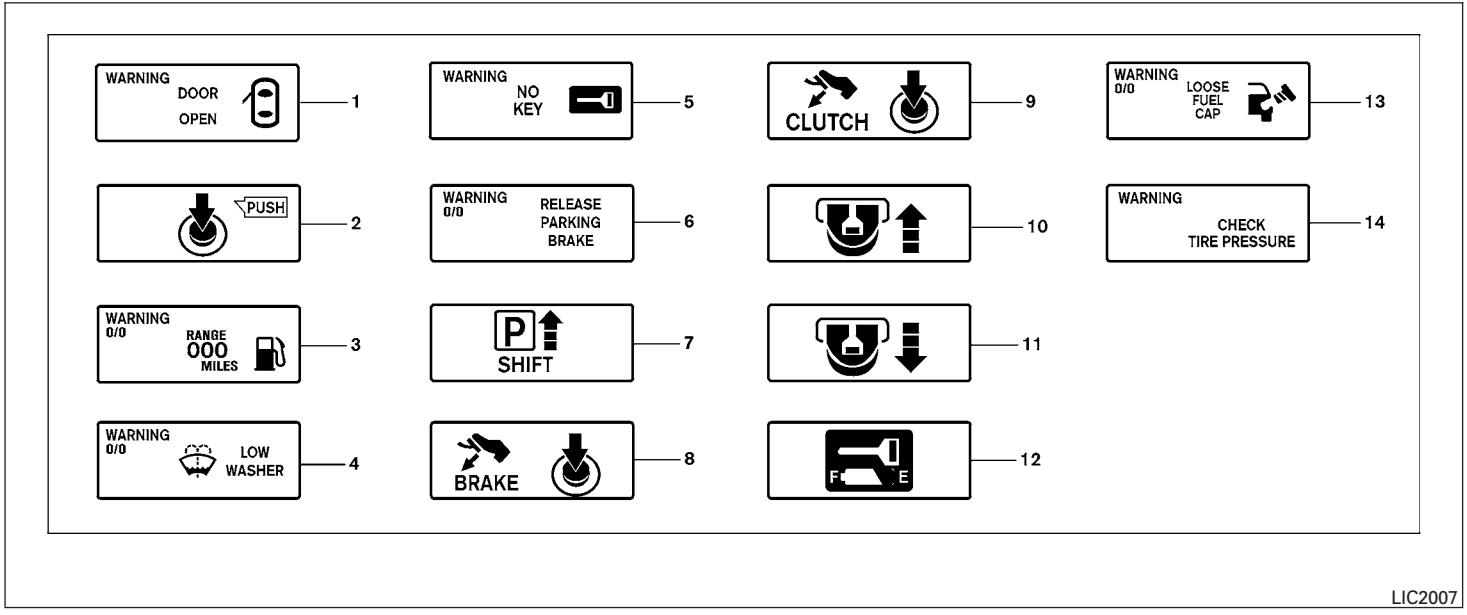

Vehicle information display warnings and indicators

1. Door and trunk open warning
2. Push warning (CVT models)
3. Low fuel warning
4. Low windshield-washer fluid warning
5. No key warning
6. Parking brake warning
7. Shift P warning (CVT models)
8. Engine start operation indicator (CVT models)
9. Engine start operation indicator (M/T models)
10. NISSAN Intelligent Key™ insertion indicator

11. NISSAN Intelligent Key™ removal indicator
12. NISSAN Intelligent Key™ battery discharge indicator
13. Loose fuel cap warning
14. Check tire pressure warning

Door and trunk open warning

This warning illuminates when a door or the trunk has been opened when the engine is running.

Push warning (CVT models)

After the Shift P warning illuminates, the Push warning will illuminate if the ignition switch is placed in the ACC position when the shift selector is moved to the P (Park) position.

See “Shift P warning (CVT models)” in this section for additional information.

To turn off the Push warning, place the ignition switch in the ON position and then in the LOCK position.

Low fuel warning

This warning illuminates when the fuel level in the fuel tank is getting low. Refuel as soon as it is convenient, preferably before the fuel gauge reaches E (Empty). **There will be a small reserve of fuel in the tank when the fuel gauge needle reaches E (Empty).**

Low windshield-washer fluid warning

This warning illuminates when the windshield-washer fluid is at a low level. Add windshield-washer fluid as necessary. See “Windshield-washer fluid” in the “Maintenance and do-it-yourself” section of this manual.

No key warning

This warning illuminates following two conditions:

1. When the ignition switch is pushed and the Intelligent Key cannot be recognized by the system. If this warning illuminates, you cannot start the engine.

   Check for the following causes and perform the assigned remedies:

   – The battery of the Intelligent Key carried with you is discharged completely. Replace the battery with a new one.

   – The Intelligent Key carried with you is not registered to the system. Use the registered Intelligent Key.

   – You do not have an Intelligent Key with you. Carry an Intelligent Key with you.

2. When the door is closed with the Intelligent Key left outside the vehicle and the ignition switch is placed in the ACC or ON position. A chime will also sound.

Parking brake warning

This warning illuminates when the parking brake is set and the vehicle is driven.

SHIFT P warning (CVT models)

This warning illuminates when the ignition switch is pushed to stop the engine with the shift selector in any position except in the P (Park) position.

If this warning illuminates, the ignition switch is placed in the OFF position. Move the shift selector to the P (Park) position or place the ignition switch in the ON position.

An inside warning chime will also sound.

If the shift selector is moved to the P (Park) position, the Push warning will appear. Refer to “Push warning (CVT models)” in this section.

For additional information about Intelligent Key, see “NISSAN Intelligent Key™ ” in the “Pre-driving checks and adjustments” section.

Engine start operation indicator (CVT models)

This indicator illuminates when the ignition switch is placed in the LOCK, OFF, ACC or ON position with the shift selector in the P (Park) position.

This indicator means that the engine will start by pushing the push-button ignition switch with the brake pedal depressed.

Engine start operation indicator (M/T models)

This indicator illuminates when the ignition switch is placed in the LOCK, OFF, ACC or ON position with the shift selector in neutral and the parking brake on.

This indicator means that the engine will start by pushing the ignition switch with the clutch and the brake pedal depressed.

NISSAN Intelligent Key™ insertion indicator

This indicator illuminates when the Intelligent Key needs to be inserted into the Intelligent Key port. (For example, the Intelligent Key battery is discharged.)

If this indicator illuminates, insert the Intelligent Key into the Intelligent Key port in the correct direction. See “Push-button ignition switch” in the “Starting and driving” section.

NISSAN Intelligent Key™ removal indicator

This indicator illuminates when the driver’s door is opened with the ignition switch placed in the OFF position and the Intelligent Key placed in the Intelligent Key port. A key reminder chime also sounds.

If this indicator illuminates, remove the Intelligent Key from the Intelligent Key port and take it with you when leaving the vehicle.

NISSAN Intelligent Key™ battery discharge indicator

This indicator illuminates when the Intelligent Key battery is running out of power.

If this indicator illuminates, replace the battery with a new one. See “NISSAN Intelligent Key™” in the “Maintenance and do-it-yourself” section.

Loose fuel cap warning

This warning appears when the fuel-filler cap is not tightened correctly after the vehicle has been refueled. See “Fuel-filler cap” in the “Pre-driving checks and adjustments” section.

Check tire pressure warning

This warning appears when the low tire pressure warning light in the meter illuminates and low tire pressure is detected. If this warning appears, stop the vehicle and adjust the tire pressure to the recommended COLD tire pressure shown on the Tire and Loading Information label. See “Low tire pressure warning light” earlier in this section and “Tire Pressure Monitoring System (TPMS)” in the “Starting and driving” section.

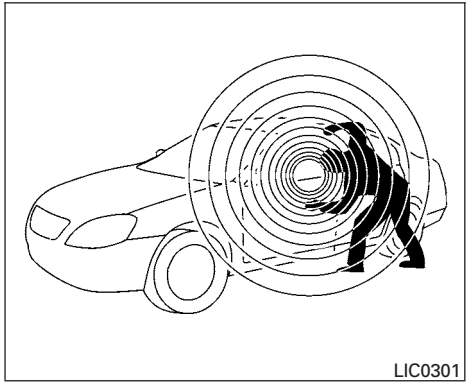

Your vehicle may have two types of security systems:

- Vehicle security system
- NISSAN Vehicle Immobilizer System

VEHICLE SECURITY SYSTEM

The vehicle security system provides visual and audible alarm signals if someone opens the doors or trunk lid when the system is armed. It is not, however, a motion detection type system that activates when a vehicle is moved or when a vibration occurs.

The system helps deter vehicle theft but cannot prevent it, nor can it prevent the theft of interior or exterior vehicle components in all situations. Always secure your vehicle even if parking for a brief period. Never leave your Intelligent Key in the vehicle, and always lock the vehicle when unattended. Be aware of your surroundings, and park in secure, well-lit areas whenever possible.

Many devices offering additional protection, such as component locks, identification markers, and tracking systems, are available at auto supply stores and specialty shops. Your NISSAN dealer may also offer such equipment. Check with your insurance company to see if you may be eligible for discounts for various theft protection features.

How to arm the vehicle security system

1. Close all windows. **(The system can be armed even if the windows are open.)**
2. Remove the Intelligent Key from the vehicle.
3. Close all doors, hood and trunk. Lock all doors. The doors can be locked with the Intelligent Key, door handle request switch (if so equipped), power door lock switch or mechanical key.
4. Confirm that the security indicator light comes on. The security light stays on for about 30 seconds. The vehicle security system is now pre-armed. After about 30 seconds the vehicle security system automatically shifts into the armed phase. The security light begins to flash once every 3 seconds. If, during the 30-second pre-arm time period, the driver's door is unlocked by the key or the keyfob, or the ignition switch is placed in the ACC or ON position, the system will not arm.

- **Even when the driver and/or passengers are in the vehicle, the system will activate with all the doors, hood and trunk lid locked with the ignition switch placed in the LOCK position. When placing the ignition switch in the ACC or ON position, the system will be released.**

Vehicle security system activation

The vehicle security system will give the following alarm:

- The headlights blink and the horn sounds intermittently.
- The alarm automatically turns off after approximately 50 seconds. However, the alarm reactivates if the vehicle is tampered with again. The alarm can be shut off by unlocking the driver's door or trunk lid with the key, or by pressing the button on the Intelligent Key.

The alarm is activated by:

- opening the door or trunk lid without using the key or Intelligent Key (even if the door is unlocked by releasing the door inside lock switch).

How to stop an activated alarm

The alarm stops only by unlocking the driver's door or the trunk lid with the key, pressing the button on the Intelligent Key, or pressing the request switch (if so equipped) on the driver's or passenger's door with the Intelligent Key in range of the door handle.

NISSAN VEHICLE IMMOBILIZER SYSTEM

The NISSAN Vehicle Immobilizer System will not allow the engine to start without the use of a registered key.

Never leave these keys in the vehicle.

Statement related to Section 15 of FCC Rules for NISSAN Vehicle Immobilizer System

This device complies with part 15 of the FCC Rules and RSS-210 of Industry Canada. Operation is subject to the following two conditions;

(1) This device may not cause harmful interference, and (2) this device must accept any interference received, including interference that may cause undesired operation of the device.

CHANGES OR MODIFICATIONS NOT EXPRESSLY APPROVED BY THE PARTY RESPONSIBLE FOR COMPLIANCE COULD VOID THE USER'S AUTHORITY TO OPERATE THE EQUIPMENT.

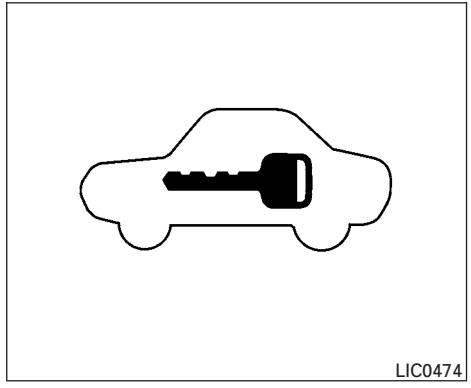

Security indicator light

The security indicator light blinks whenever the ignition switch is placed in the OFF, LOCK or ACC position. This function indicates the NISSAN Vehicle Immobilizer System is operational.

If the NISSAN Vehicle Immobilizer System is malfunctioning, the light will remain on while the ignition switch is placed in the ON position.

If the light still remains on and/or the engine will not start, see a NISSAN dealer for NISSAN Vehicle Immobilizer System service as soon as possible. Please bring all registered keys that you have when visiting your NISSAN dealer for service.

WINDSHIELD WIPER AND WASHER SWITCH

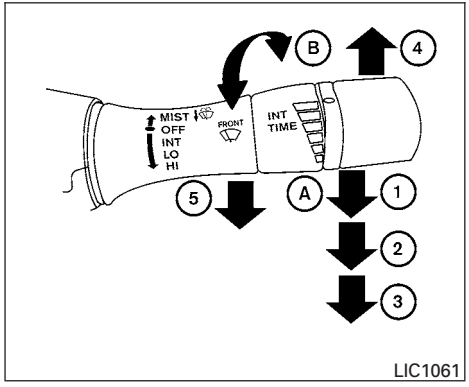

SWITCH OPERATION

The windshield wiper and washer switch operates when the ignition switch is placed in the ON position.

Push the lever down to operate the wiper at the following speed:

① Intermittent — intermittent operation can be adjusted by turning the switch toward Ⓐ (Slower) or Ⓑ (Faster). Also, for vehicles equipped with speed dependent wipers, the intermittent operation speed varies in accordance with the vehicle speed. (For example, when the vehicle speed is high, the intermittent operation speed will be faster.)

② Low — continuous low speed operation

③ High — continuous high speed operation

Push the lever up ④ to have one sweep operation of the wiper.

Pull the lever toward you ⑤ to operate the washer. The wiper will also operate several times.

⚠ WARNING

In freezing temperatures the washer solution may freeze on the windshield and obscure your vision which may lead to an accident. Warm the windshield with the defroster before you wash the windshield.

⚠ CAUTION

- **Do not operate the washer continuously for more than 30 seconds.**
- **Do not operate the washer if the windshield-washer fluid reservoir is empty.**
- **Do not fill the windshield-washer fluid reservoir with washer fluid concentrates at full strength. Some methyl alcohol based washer fluid concentrates may permanently stain the grille if spilled while filling the windshield-washer fluid reservoir.**
- **Pre-mix windshield-washer fluid concentrates with water to the manufacturer's recommended levels before pouring the fluid into the windshield-washer fluid reservoir. Do not use the windshield-washer fluid reservoir to mix the washer fluid concentrate and water.**

REAR WINDOW AND OUTSIDE MIRROR (if so equipped) DEFROSTER SWITCH

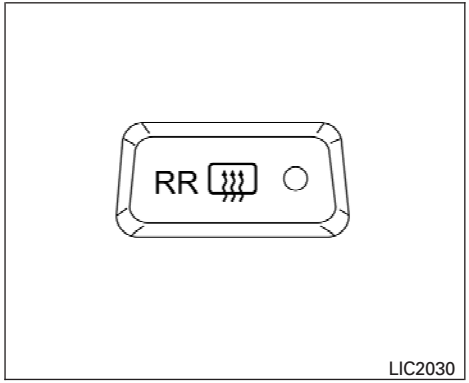

Type A

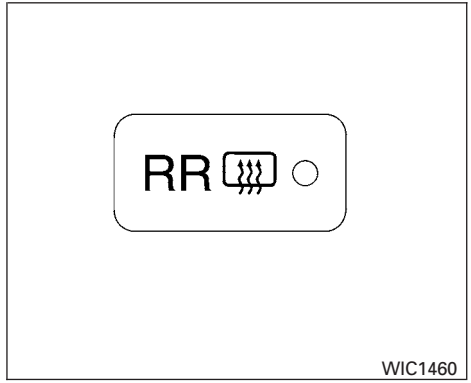

Type B

To defrost the rear window glass and outside mirrors (if so equipped), start the engine and push the rear window defroster switch on. The rear window defroster indicator light on the switch comes on. Push the switch again to turn the defroster off.

The rear window defroster automatically turns off after approximately 15 minutes.

CAUTION

When cleaning the inner side of the rear window, be careful not to scratch or damage the rear window defroster.

NOTE:

The top and bottom few rows of wires on the rear window are not part of the rear window defroster system. These wires make up the antenna for the audio system.

HEADLIGHT AND TURN SIGNAL SWITCH

XENON HEADLIGHTS (if so equipped)

WARNING

HIGH VOLTAGE

- **When xenon headlights are on, they produce a high voltage. To prevent an electric shock, never attempt to modify or disassemble. Always have your xenon headlights replaced at a NISSAN dealer.**
- **Xenon headlights provide considerably more light than conventional headlights. If they are not correctly aimed, they might temporarily blind an oncoming driver or the driver ahead of you and cause a serious accident. If headlights are not aimed correctly, immediately take your vehicle to a NISSAN dealer and have the headlights adjusted correctly.**

When the xenon headlight is initially turned on, its brightness or color varies slightly. However, the color and brightness will soon stabilize.

- **The life of xenon headlights will be shortened by frequent on-off operation. It is generally desirable not to turn off the headlights for short intervals (for example, when the vehicle stops at a traffic signal). Even when the daytime running lights are active (Canada only), the xenon headlights do not turn on. This way the life of the xenon headlights is not reduced.**
- **If the xenon headlight bulb is close to burning out, the brightness will drastically decrease, the light will start blinking, or the color of the light will become reddish. If one or more of the above signs appear, contact a NISSAN dealer.**

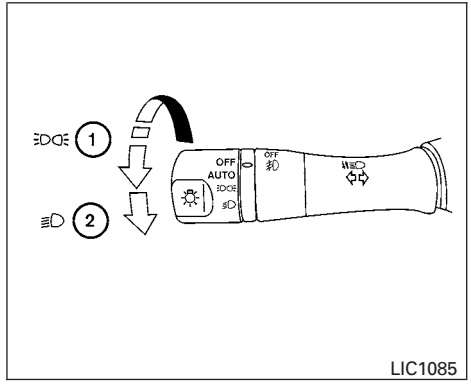

LIC1085

Type A

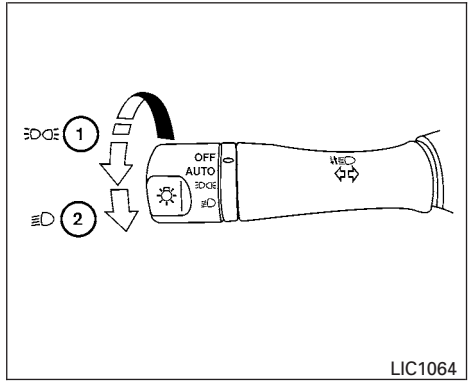

LIC1064

Type B

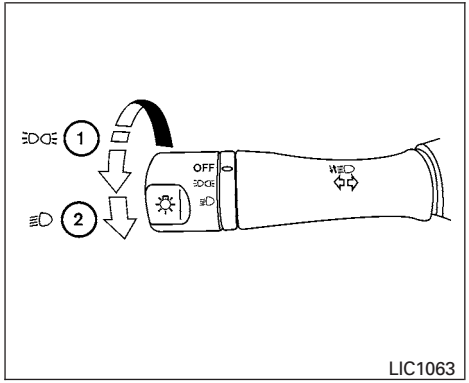

Type C

HEADLIGHT CONTROL SWITCH

Lighting

① When turning the switch to the position, the front parking, tail, license plate and instrument panel lights come on.

② When turning the switch to the position, the headlights come on and all the other lights remain on.

⚠CAUTION

Use the headlights with the engine running to avoid discharging the vehicle battery.

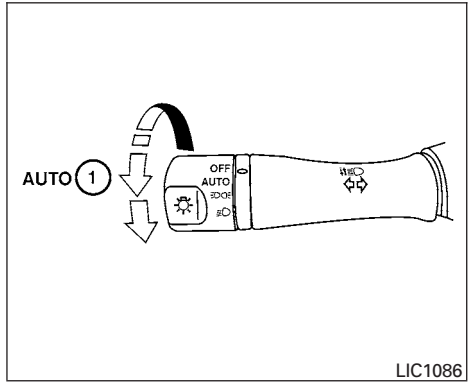

Autolight system (if so equipped)

The autolight system allows the headlights to be set so they turn on and off automatically. The autolight system can:

- Turn on the headlights, front parking, tail, license plate and instrument panel lights automatically when it is dark.
- Turn off all the lights when it is light.
- Keep all the lights on for 45 seconds after you place the ignition switch in the OFF position and all doors are closed.

To turn on the autolight system:

1. Turn the headlight switch to the AUTO position ①.
2. Push the push-button ignition switch to the ON position.
3. The autolight system automatically turns the headlights on and off.

Initially, if the ignition switch is placed in the OFF position and a door is opened and left open, the headlights remain ON for 5 minutes. If another door is opened during the 5 minutes, then the 5 minute timer is reset.

To turn the autolight system off, turn the switch to the OFF, , or position.

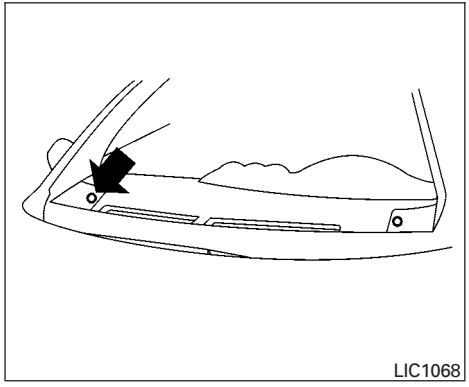

Be sure you do not put anything on top of the autolight sensor located on the top side of the instrument panel. The autolight sensor controls the autolight; if it is covered, the autolight sensor reacts as if it is dark out and the headlights will illuminate. If this occurs while parked with the engine off and the ignition switch placed in the ON position, your vehicle's battery could become discharged.

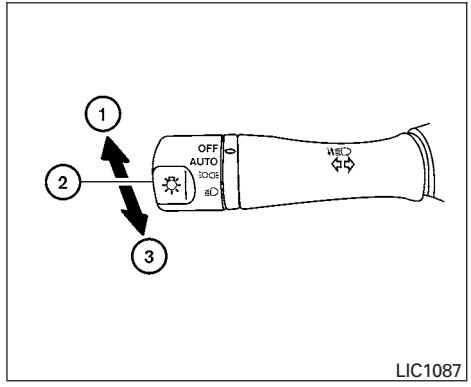

Headlight beam select

① To select the high beam function, push the lever forward. The high beam lights come on and the light illuminates.

② Pull the lever back to select the low beam.

③ Pulling and releasing the lever flashes the headlight high beams on and off.

Battery saver system

If the ignition switch is placed in the OFF position while the headlight switch is in the or position, the headlights will turn off after 5 minutes.

⚠ CAUTION

Even though the battery saver feature automatically turns off the headlights after a period of time, you should turn the headlight switch to the OFF position when the engine is not running to avoid discharging the vehicle battery.

DAYTIME RUNNING LIGHT SYSTEM (Canada only)

The headlights automatically illuminate at a reduced intensity when the engine is started with the parking brake released. The daytime running lights operate with the headlight switch in the OFF position or in the position. Turn the headlight switch to the position for full illumination when driving at night.

If the parking brake is applied before the engine is started, the daytime running lights do not illuminate. The daytime running lights illuminate when the parking brake is released. The daytime running lights will remain on until the ignition switch is placed in the OFF position.

⚠ WARNING

When the daytime running light system is active, tail lights on your vehicle are not on. It is necessary at dusk to turn on your headlights. Failure to do so could cause an accident injuring yourself and others.

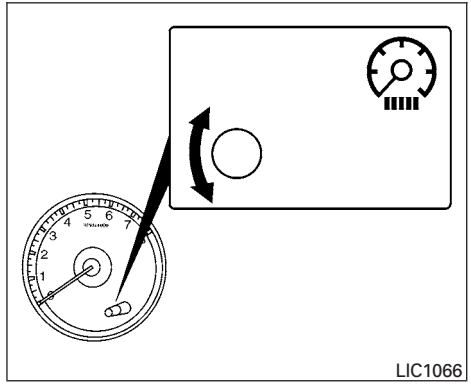

INSTRUMENT BRIGHTNESS CONTROL

The instrument cluster illuminates when the ignition switch is placed in the ON position.

The instrument brightness control operates when the headlight control switch is in the AUTO, or position.

Turn the control left or right to adjust the brightness of the instrument panel lights when driving at night.

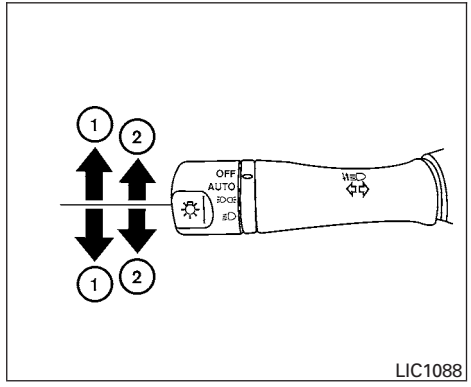

TURN SIGNAL SWITCH

Turn signal

① Move the lever up or down to signal the turning direction. When the turn is completed, the turn signals cancel automatically.

Lane change signal

② To signal a lane change, move the lever up or down to the point where the indicator light begins to flash, but the lever does not latch.

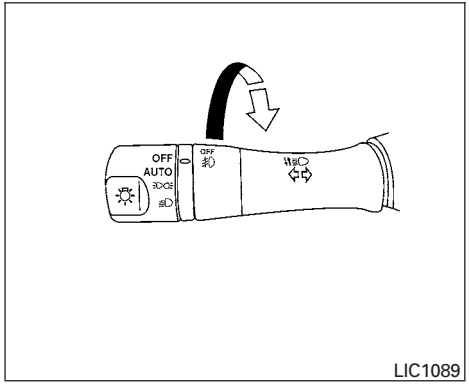

LIC1089

FOG LIGHT SWITCH (if so equipped)

To turn the fog lights on, turn the headlight switch to the position, then turn the fog light switch to the position.

To turn the fog lights on with the headlight switch in the AUTO position (if so equipped), the headlights must be on, then turn the fog light switch to the position.

To turn the fog lights off, turn the fog light switch to the OFF position.

The headlights must be on and the low beams selected for the fog lights to operate. The fog lights automatically turn off when the high beam headlights are selected.

HAZARD WARNING FLASHER SWITCH

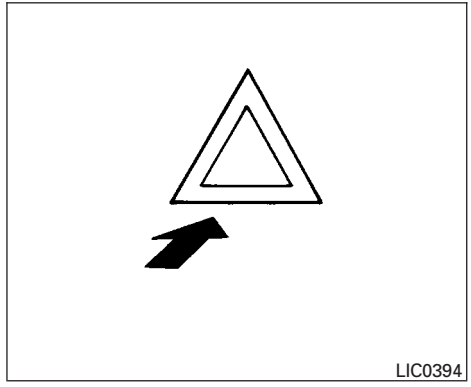
LIC0394

Push the switch on to warn other drivers when you must stop or park under emergency conditions. All turn signal lights flash.

WARNING

- **If stopping for an emergency, be sure to move the vehicle well off the road.**
- **Do not use the hazard warning flashers while moving on the highway unless unusual circumstances force you to drive so slowly that your vehicle might become a hazard to other traffic.**
- **Turn signals do not work when the hazard warning flasher lights are on.**

The flashers will operate with the ignition switch placed in any position.

Some state laws may prohibit the use of the hazard warning flasher switch while driving.

HORN

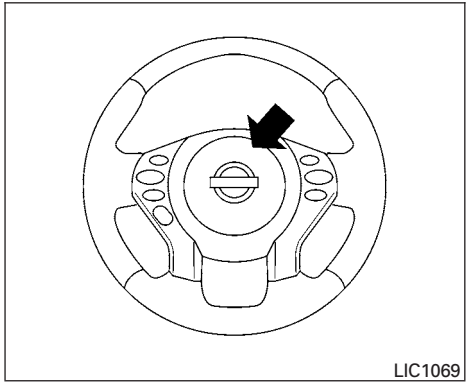

To sound the horn, push the center pad area of the steering wheel.

⚠ WARNING

Do not disassemble the horn. Doing so could affect proper operation of the supplemental front air bag system. Tampering with the supplemental front air bag system may result in serious personal injury.

HEATED SEAT (if so equipped)

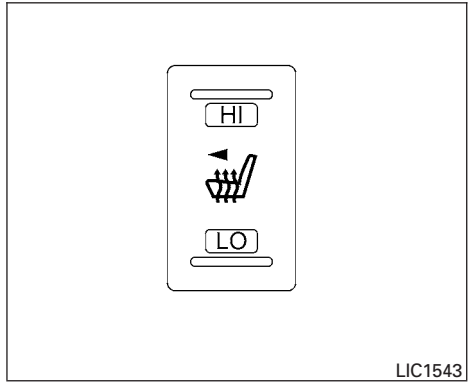

The front seats are warmed by built-in heaters.

1. Start the engine.
2. Push the low or high position of the switch, as desired, depending on the temperature. The indicator light in the switch will illuminate.

   The heater is controlled by a thermostat, automatically turning the heater on and off. The indicator light will remain on as long as the switch is on.
3. When the seat is warmed or before you leave the vehicle, be sure to turn the switch off.

⚠ CAUTION

- **Do not use the seat heater for extended periods or when no one is using the seat.**
- **Do not put anything on the seat which insulates heat, such as a blanket, cushion, seat cover, etc. Otherwise, the seat may become overheated.**
- **Do not place anything hard or heavy on the seat or pierce it with a pin or similar object. This may result in damage to the heater.**
- **Any liquid spilled on the heated seat should be removed immediately with a dry cloth.**
- **When cleaning the seat, never use gasoline, benzine, thinner, or any similar materials.**
- **If any abnormalities are found or the heated seat does not operate, turn the switch off and have the system checked by your NISSAN dealer.**
- **The battery could run down if the seat heater is operated while the engine is not running.**

VEHICLE DYNAMIC CONTROL (VDC) OFF SWITCH

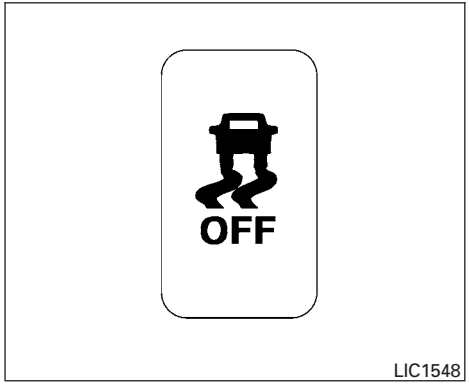

The vehicle should be driven with the Vehicle Dynamic Control (VDC) system on for most driving conditions.

If the vehicle is stuck in mud or snow, the VDC system reduces the engine output to reduce wheel spin. The engine speed will be reduced even if the accelerator is depressed to the floor. If maximum engine power is needed to free a stuck vehicle, turn the VDC system off.

To turn off the VDC system, push the VDC OFF switch. The indicator will come on.

Push the VDC OFF switch again or restart the engine to turn on the system. See "Vehicle Dynamic Control (VDC) system" in the "Starting and driving" section.

POWER OUTLET

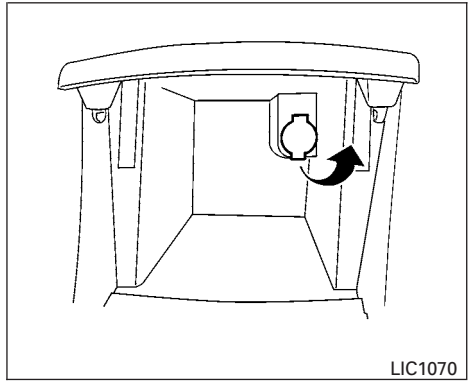

Instrument panel

The power outlets are for powering electrical accessories such as cellular telephones. They are rated at 12 volt, 120W (10A) maximum. The console outlet is powered directly by the vehicle's battery.

⚠ CAUTION

- **The outlet and plug may be hot during or immediately after use.**
- **Only certain power outlets are designed for use with a cigarette lighter unit. Do not use any other power outlet for an accessory lighter. See your NISSAN dealer for additional information.**
- **Do not use with accessories that exceed a 12 volt, 120W (10A) power draw. Do not use double adapters or more than one electrical accessory.**
- **Use power outlets with the engine running to avoid discharging the vehicle battery.**
- **Avoid using power outlets when the air conditioner, headlights or rear window defroster is on.**
- **Before inserting or disconnecting a plug, be sure the electrical accessory being used is turned OFF.**
- **Push the plug in as far as it will go. If good contact is not made, the plug may overheat or the internal temperature fuse may open.**
- **When not in use, be sure to close the cap. Do not allow water or any other liquids to contact the outlet.**

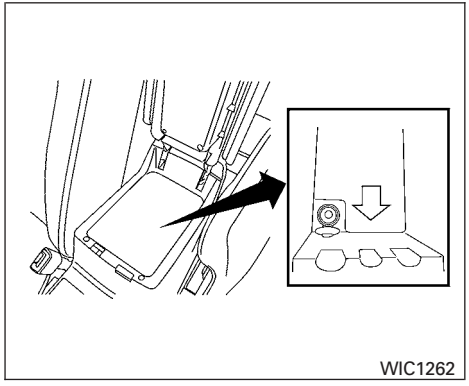

Console box

Open the lower half of the console box to access the power outlet. Refer to “Console box” in this section.

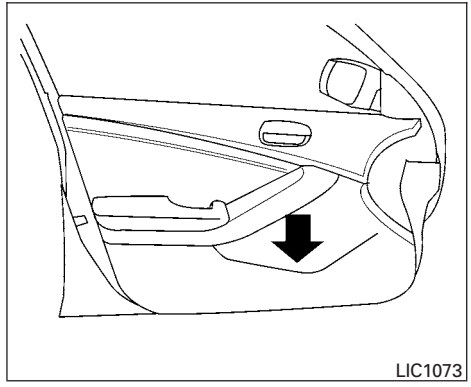

MAP POCKETS

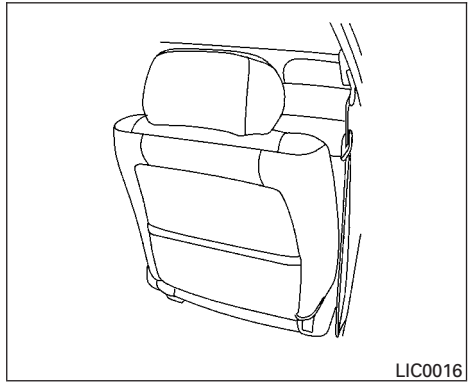

SEATBACK POCKETS (if so equipped)

The seatback pockets are located on the back of the driver’s and passenger’s seats. The pockets can be used to store maps.

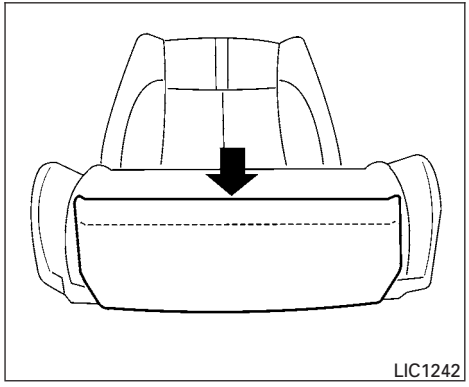

STORAGE POUCH (if so equipped)

A storage pouch is located on the front of the driver's and passenger's seats.

⚠ WARNING

Do not store angular, sharp, heavy objects or objects that cannot fully fit inside the pouch because they might increase the likelihood of an injury in a crash.

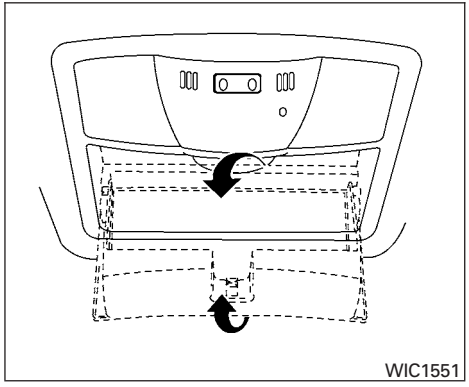

SUNGLASSES HOLDER

To open the sunglasses holder, push and release.

Only store one pair of sunglasses in the holder.

⚠ WARNING

Keep the sunglasses holder closed while driving to prevent an accident.

⚠ CAUTION

- **Do not use for anything other than sunglasses.**
- **Do not leave sunglasses in the sunglasses holder while parking in direct sunlight. The heat may damage the sunglasses.**

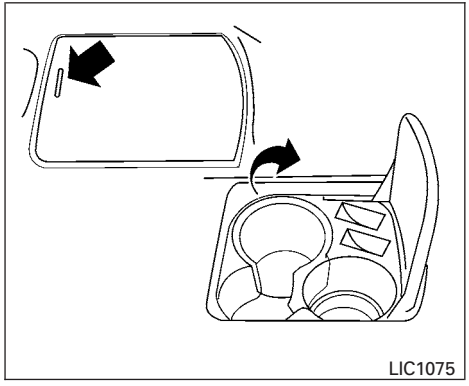

Front - Type A

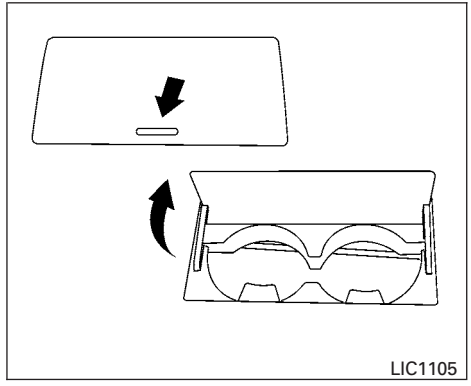

Front - Type B

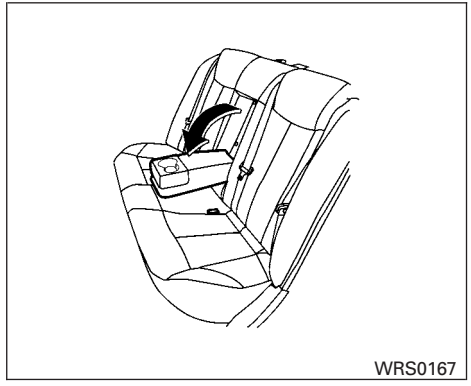

Rear (sedan)

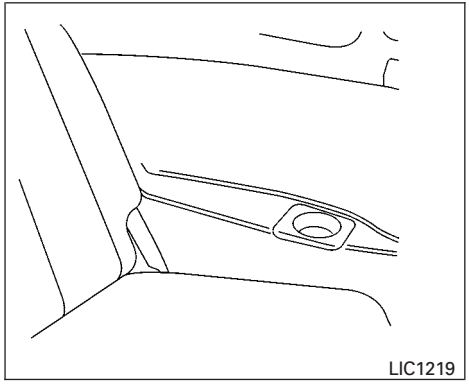

Rear (coupe)

CUP HOLDERS

To open the front cup holders, push the cup holder lid. To close, lower the cup holder lid and push down until it clicks in place.

The plastic insert (if so equipped) may be removed to accommodate a larger cup size or for cleaning.

The rear center cup holders are located in the rear fold-down armrest (sedan) or in the rear arm rest (coupe).

⚠ CAUTION

- **Avoid abrupt starting and braking when the cup holder is being used to prevent spilling the drink. If the liquid is hot, it can scald you or your passenger.**
- **Use only soft cups in the cup holder. Hard objects can injure you in an accident.**

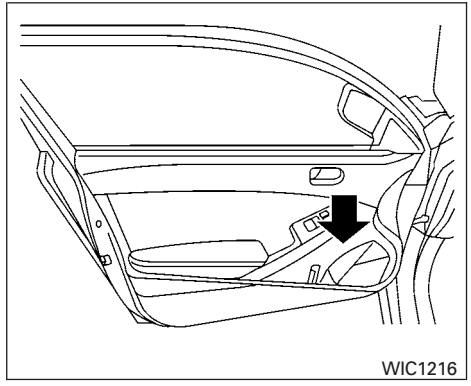

Soft bottle holder

Soft bottle holder

⚠ CAUTION

- **Do not use bottle holder for any other objects that could be thrown about in the vehicle and possibly injure people during sudden braking or an accident.**
- **Do not use bottle holder for open liquid containers.**

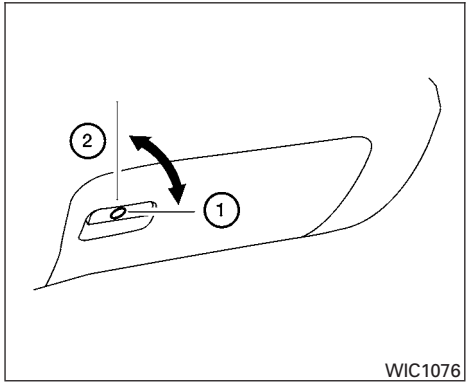

GLOVE BOX

Open the glove box by pulling the handle. Use the master key when locking ① or unlocking ② the glove box.

⚠ WARNING

Keep glove box lid closed while driving to help prevent injury in an accident or a sudden stop.

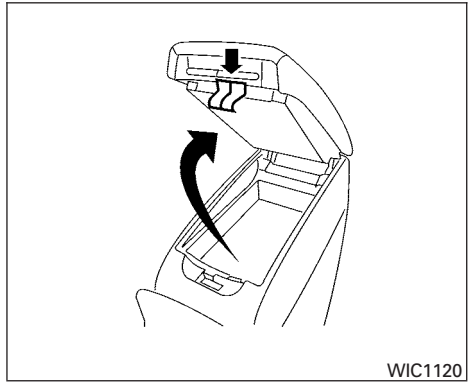

CONSOLE BOX

Upper half

Pull up on the driver's side latch to open the upper half of the console box. The mat (if so equipped) may be removed for cleaning.

The upper half of the console box may be used for storage of cellular phones. An access hole is provided at the front of the upper half of the console box for phone cord routing to the power outlet.

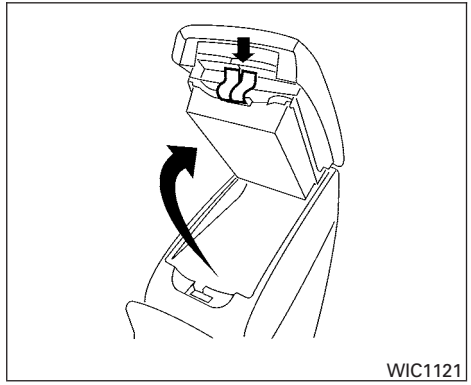

Lower half

Pull up on the passenger's side latch to open the lower half of the console box. A power outlet is located inside the console box. The mat (if so equipped) may be removed for cleaning.

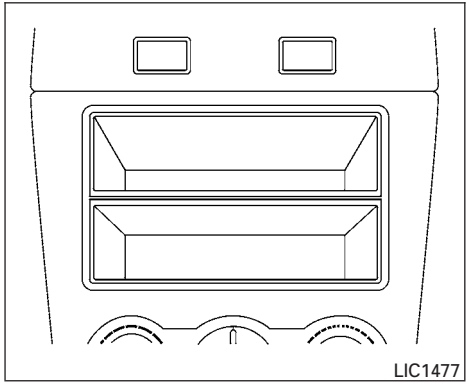

STORAGE BOX (if so equipped)

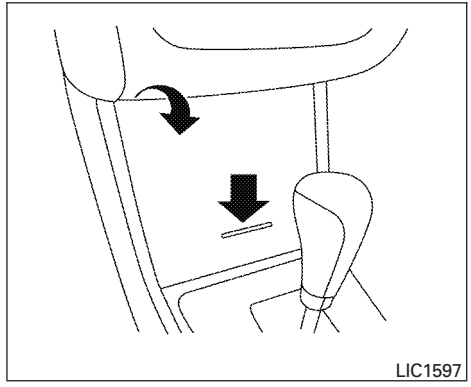

COVERED STORAGE BOX

Push the center of the lid to open.

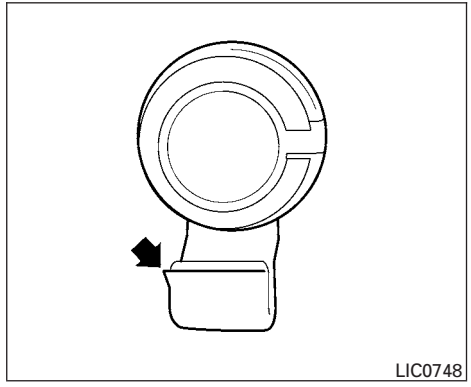

GROCERY HOOKS

The grocery hooks are located in the trunk and can be used to hang a standard size plastic grocery bag.

⚠ CAUTION

Do not apply a total load of more than 20 lbs (9 kg) to a single grocery hook.

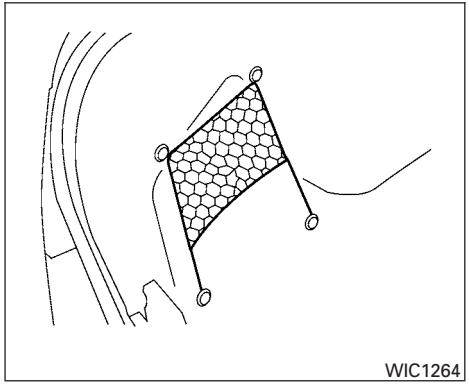

CARGO NET (if so equipped)

⚠ WARNING

Properly secure all cargo with ropes or straps to help prevent it from sliding or shifting. In a sudden stop or collision, unsecured cargo could cause personal injury.

The cargo net helps keep packages in the cargo area from moving around while the vehicle is in motion.

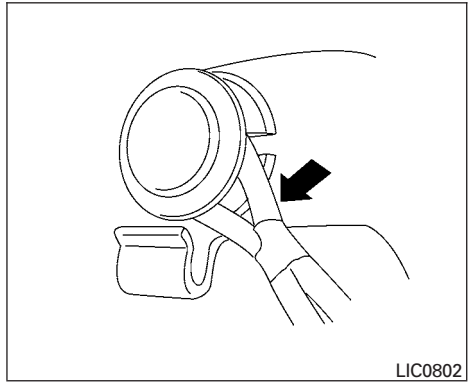

To install the cargo net, attach the net to the retainers.

To remove the cargo net, detach the net from the cargo net retainers.

POWER WINDOWS

⚠ WARNING

- **Make sure that all passengers have their hands, etc. inside the vehicle while it is in motion and before closing the windows. Use the window lock switch to prevent unexpected use of the power windows.**
- **Do not leave children unattended inside the vehicle. They could unknowingly activate switches or controls and become trapped in a window. Unattended children could become involved in serious accidents.**

The power windows operate when the ignition switch is placed in the ON position, or for about 45 seconds after the ignition switch is placed in the OFF position. If the driver's or passenger's door is opened during this period of about 45 seconds, power to the windows is canceled.

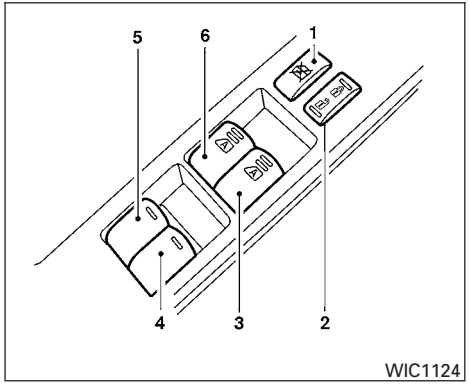

1. Window lock button
2. Power door lock switch
3. Front passenger side (automatic switch, if so equipped)
4. Right rear passenger side (sedan only)
5. Left rear passenger side (sedan only)
6. Driver side automatic switch

Driver's side power window switch

The driver's side control panel is equipped with switches to open or close all of the windows.

To open a window, push the switch to the first detent and continue to hold down until the desired window position is reached. To close a window, pull the switch to the first detent and continue to hold down until the desired window position is reached.

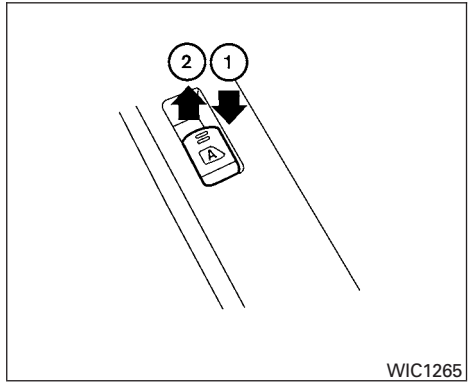

Front passenger's power window switch

The passenger's window switch operates only the corresponding passenger's window. To open the window, push the switch to the first detent and continue to hold it down until the desired window position is reached ①. To close the window, pull the switch to the first detent and continue to hold it up until the desired window position is reached ②.

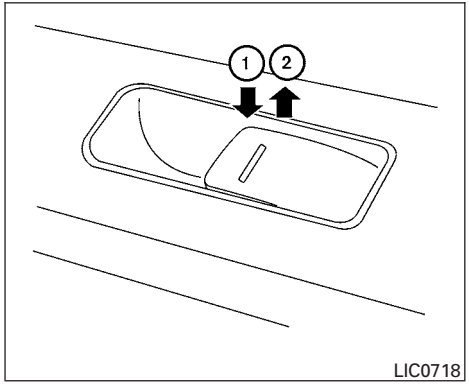

Rear power window switch (sedan only)

The rear power window switches open or close only the corresponding windows. To open the window, push the switch and hold it down ①. To close the window, pull the switch up ②.

Locking passengers' windows

When the window lock button is depressed, only the driver's side window can be opened or closed. Push it again to cancel the window lock function.

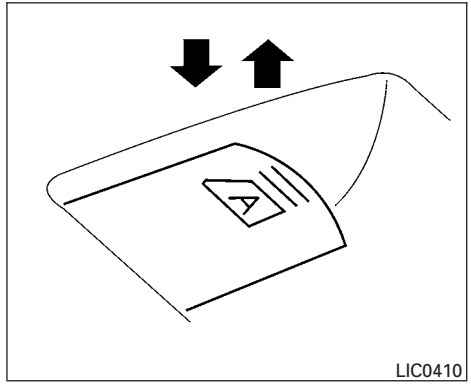

Automatic operation

To fully open a window equipped with automatic operation, press the window switch down (only driver's side shown) to the second detent and release it; it need not be held. The window automatically opens all the way. To stop the window, lift the switch up while the window is opening.

To fully close a window equipped with automatic operation, pull the switch up to the second detent and release it; it need not be held. To stop the window, press the switch down while the window is closing.

Auto-reverse function

If the control unit detects something caught in the window as it is closing, the window will be immediately lowered.

The auto-reverse function can be activated when the window is closed by automatic operation when the ignition switch is placed in the ON position or for 45 seconds after the ignition switch is placed in the OFF position.

Depending on the environment or driving conditions, the auto-reverse function may be activated if an impact or load similar to something being caught in the window occurs.

⚠ WARNING

There are some small distances immediately before the closed position which cannot be detected. Make sure that all passengers have their hands, etc., inside the vehicle before closing the window.

When power window switch does not operate

If the power window automatic function (closing only) does not operate properly, perform the following procedure to initialize the power window system:

1. Place the ignition switch in the ON position.
2. Open the window more than halfway by operating the power window switch.
3. Pull the power window switch and hold it to close the window, and then hold the switch more than 3 seconds after the window is closed.
4. Release the power window switch. Operate the window by the automatic function to confirm the initialization is complete. The power window automatically opens or closes depending on if the automatic down or up function is selected.
5. Perform steps 2 through 4 above for other windows.

If the power window function does not operate properly after performing the above procedure, see a NISSAN dealer for assistance.

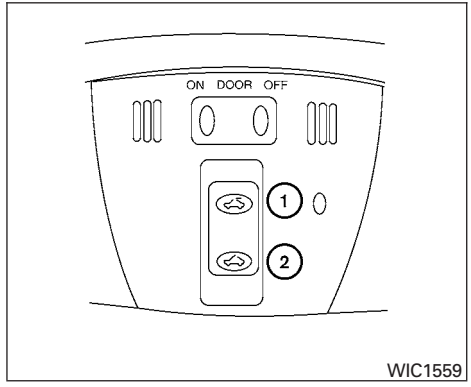

AUTOMATIC MOONROOF

The moonroof will only operate when the ignition switch is placed in the ON position. The automatic moonroof is operational for about 45 seconds, even if the ignition switch is placed in the ACC or OFF position. If the driver's door or the front passenger's door is opened during this period of about 45 seconds, power to the moonroof is canceled.

Sliding the moonroof

To fully open the moonroof, push the switch toward ①.

To fully close the moonroof, push the switch toward ②.

To open or close the moonroof part way, push the switch in any direction while the moonroof is sliding to stop it in the desired position.

Tilting the moonroof

Close the moonroof by pushing the switch toward ②. Release the switch, then push the switch toward ② again to tilt the moonroof up.

To tilt the moonroof down, push the switch toward ①.

⚠ WARNING

- **In an accident you could be thrown from the vehicle through an open moonroof. Always use seat belts and child restraints.**
- **Do not allow anyone to stand up or extend any portion of their body out of the moonroof opening while the vehicle is in motion or while the moonroof is closing.**

⚠ CAUTION

- **Remove water drops, snow, ice or sand from the moonroof before opening.**
- **Do not place heavy objects on the moonroof or surrounding area.**

Resetting the moonroof switch

The moonroof switch may not operate properly and need to be reset if any of the following conditions have occurred:

- the moonroof has been manually moved,
- the moonroof motor has been removed and reinstalled after the moonroof has been re-positioned or adjusted,
- the moonroof glass panel has been adjusted or changed, or
- the electrical supply interrupted and/or some malfunction has been detected.

Use the following reset procedure to return the moonroof operation to normal.

1. Place the ignition switch in the ON position.
2. Push and hold the moonroof switch toward ② . Once the moonroof has reached the full tilt position, release the switch. Push and hold the switch toward the ② position again. After a delay of four seconds, the moonroof will make a small movement and backup.
3. Release the switch.
4. Within 5 seconds of releasing the switch, push and continuously hold the switch toward ②. The moonroof will move from the tilt position to the open position and back to the close position.

NOTE:

If the switch is released at any time during Step 4, the procedure must be restarted.

5. Release the switch. Do not place the ignition switch in the OFF position for at least 2 seconds. The moonroof is now reset.

If the moonroof still does not operate properly, have the moonroof system checked by a NISSAN dealer.

Auto-reverse function (when closing or tilting down the moonroof)

The auto-reverse function can be activated when the moonroof is closed or tilted down by automatic operation when the ignition switch is placed in the ON position or for about 45 seconds after the ignition switch is placed in the OFF position.

Depending on the environment or driving conditions, the auto-reverse function may be activated if an impact or load similar to something being caught in the moonroof occurs.

⚠ WARNING

There are some small distances immediately before the closed position which cannot be detected. Make sure that all passengers have their hands, etc., inside the vehicle before closing the moonroof.

When closing:

If the control unit detects something caught in the moonroof as it moves to the front, the moonroof will immediately open backward.

When tilting down:

If the control unit detects something caught in the moonroof as it tilts down, the moonroof will immediately tilt up.

If the auto-reverse function malfunctions and repeats opening or tilting up the moonroof, keep pushing the tilt down switch within 5 seconds after it happens; the moonroof will fully close gradually. Make sure nothing is caught in the moonroof.

⚠ WARNING

- **In an accident you could be thrown from the vehicle through an open moonroof. Always use seat belts and child restraints.**
- **Do not allow anyone to stand up or extend any portion of their body out of the moonroof opening while the vehicle is in motion or while the moonroof is closing.**

⚠ CAUTION

- **Remove water drops, snow, ice or sand from the moonroof before opening.**
- **Do not place heavy objects on the moonroof or surrounding area.**

Sunshade

Open and close the sunshade by sliding it forward or backward.

If the moonroof does not close

Have your NISSAN dealer check and repair the moonroof.

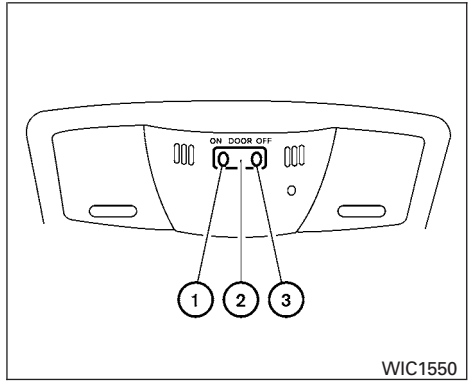

Type A

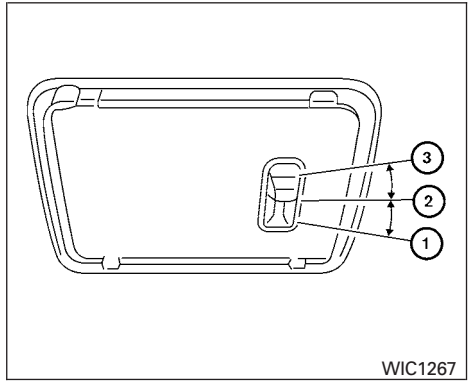

Type B

INTERIOR LIGHT

The interior light has a three-position switch and operates regardless of ignition switch position.

- When the switch is in the ON position ①, the interior light illuminates, regardless of door position. The light will go off after 15 minutes unless the ignition switch is placed in the ON position.
- When the switch is in the center DOOR position ②, the front and rear personal lights will illuminate when the driver's door is opened. Lights remain on for a maximum of 30 seconds after driver's door is closed.

The lights will go off when the ignition switch is placed in the ON position, or the driver's door is closed and locked.

The lights will also go off after 15 minutes when the doors are open.

- When the switch is in the OFF position ③, the interior light does not illuminate, regardless of door position.

NOTE:

The doorstep lights illuminate when the driver and passenger doors are opened regardless of the interior light switch position. These lights will turn off automatically after 15 minutes while doors are open to prevent the battery from becoming discharged.

⚠ CAUTION

Do not use for extended periods of time with the engine stopped. This could result in a discharged battery.

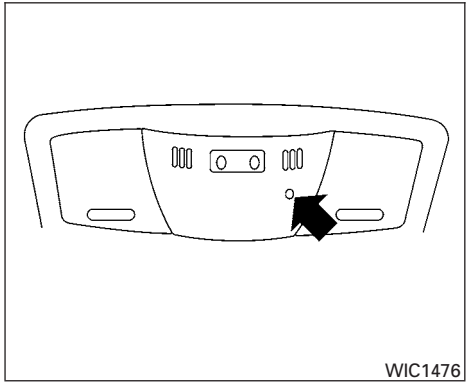

CONSOLE LIGHT (if so equipped)

The console light will turn on whenever the parking lights or headlights are illuminated.

The console light brightness can be adjusted with the instrument brightness control.

PERSONAL LIGHTS

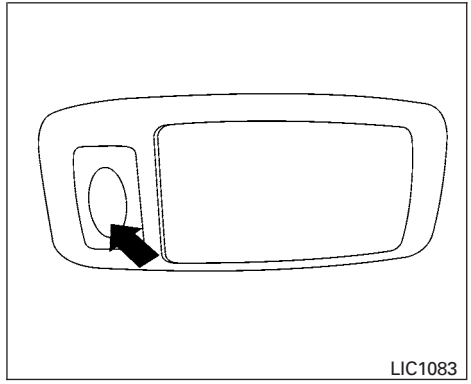

Rear personal lights (sedan only)

To turn the rear personal lights on, press the switch. To turn them off, press the switch again.

MAP LIGHTS

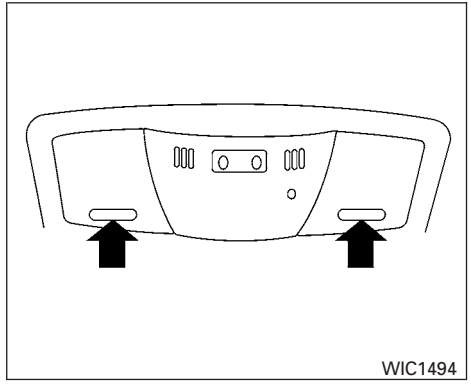

Front map lights

To turn the map lights on, press the light lens. To turn them off, press the lens again.

⚠ CAUTION

Do not use for extended periods of time with the engine stopped. This could result in a discharged battery.

TRUNK LIGHT

The light illuminates when the trunk lid is opened. When the trunk lid is closed, the light goes off.

The light will go off after about 15 minutes if the trunk lid is left open, unless the ignition switch is placed in the ON position.

For bulb replacement procedures, refer to “Exterior and interior lights” in the “Maintenance and do-it-yourself” section of this manual.

HOMELINK® UNIVERSAL TRANSCEIVER (if so equipped)

The HomeLink® Universal Transceiver provides a convenient way to consolidate the functions of up to three individual hand-held transmitters into one built-in device.

HomeLink® Universal Transceiver:

- Will operate most Radio Frequency (RF) devices such as garage doors, gates, home and office lighting, entry door locks and security systems.
- Is powered by your vehicle’s battery. No separate batteries are required. If the vehicle’s battery is discharged or is disconnected, HomeLink® will retain all programming.

Once the HomeLink® Universal Transceiver is programmed, retain the original transmitter for future programming procedures (Example: new vehicle purchases). Upon sale of the vehicle, the programmed HomeLink® Universal Transceiver buttons should be erased for security purposes. For additional information, refer to “Programming HomeLink®” later in this section.

⚠ WARNING

- **Do not use the HomeLink® Universal Transceiver with any garage door opener that lacks safety stop and reverse features as required by federal safety standards. (These standards became effective for opener models manufactured after April 1, 1982). A garage door opener which cannot detect an object in the path of a closing garage door and then automatically stop and reverse, does not meet current federal safety standards. Using a garage door opener without these features increases the risk of serious injury or death.**
- **During the programming procedure your garage door or security gate will open and close (if the transmitter is within range). Make sure that people or objects are clear of the garage door, gate, etc. that you are programming.**
- **Your vehicle’s engine should be turned off while programming the HomeLink® Universal Transceiver.**

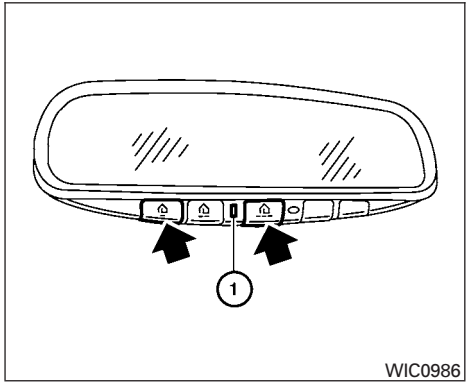

WIC0986

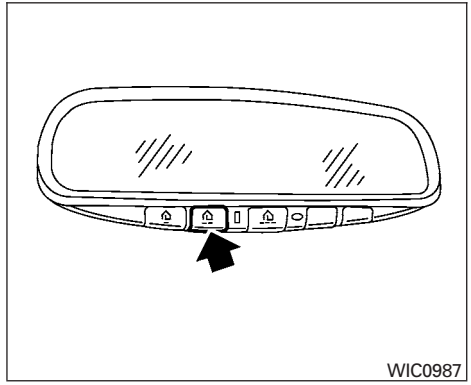
WIC0987

PROGRAMMING HOMELINK®

1. To begin, press and hold the two outer HomeLink® buttons (to clear the memory) until the indicator light ① blinks (after 20 seconds). Release both buttons.
2. Position the end of the hand-held transmitter 1 - 3 inches (26 - 76 mm) away from the HomeLink® surface.
3. Using both hands, simultaneously press and hold both the HomeLink® button you want to program and the hand-held transmitter button.

   DO NOT release the buttons until step 4 has been completed.
4. Hold down both buttons until the indicator light on the HomeLink® flashes, changing from a “slow blink” to a “rapidly flashing blink”. This could take up to 90 seconds. When the indicator light flashes rapidly, both buttons may be released. The rapidly flashing light indicates successful programming. To activate the garage door or other programmed device, press and hold the programmed HomeLink® button — releasing when the device begins to activate.
5. If the indicator light on the HomeLink® blinks rapidly for 2 seconds and then turns solid, HomeLink® has picked up a “rolling code” garage door opener signal. You will need to proceed with the next steps to train the HomeLink® to complete the programming which may require a ladder and another person for convenience.
6. Press and release the “smart” or “learn” program button located on the garage door opener’s motor to activate the “training mode”. This button is usually located near the antenna wire that hangs down from the motor. If the wire originates from under a light lens, you will need to remove the lens to access the program button.

NOTE:

Once you have pressed and released the program button on the garage door opener’s motor and the “training light” is lit, you have 30 seconds in which to perform step 7. Use the help of a second person for convenience to assist when performing this step.

7. Within 30 seconds of pressing and releasing the garage door opener's program button, quickly and firmly press and release the HomeLink® button you've just programmed. Press and release the HomeLink® button up to 3 times to complete the training.
8. Your HomeLink® button should now be programmed. (To program the remaining HomeLink® buttons for additional door or gate openers, follow steps 2-4 only.)

NOTE:

Do not repeat step 1 unless you want to "clear" all previously programmed HomeLink® buttons.

If you have any questions or are having difficulty programming your HomeLink® buttons, refer to the HomeLink® web site at: www.homelink.com or call 1-800-355-3515.

PROGRAMMING HOMELINK® FOR CANADIAN CUSTOMERS

Prior to 1992, D.O.C. regulations required hand-held transmitters to stop transmitting after 2 seconds. To program your hand-held transmitter to HomeLink®, continue to press and hold the HomeLink® button (see steps 2 - 4 under "Programming HomeLink®") while you press and re-press ("cycle") your hand-held transmitters every 2 seconds until the indicator light flashes rapidly (indicating successful programming).

NOTE:

When programming a garage door opener, etc., it is advised to unplug the device during the "cycling" process to prevent possible damage to the garage door opener components.

OPERATING THE HOMELINK® UNIVERSAL TRANSCEIVER

The HomeLink® Universal Transceiver (once programmed) may now be used to activate the garage door, etc. To operate, simply press the appropriate programmed HomeLink® Universal Transceiver button. The red indicator light will illuminate while the signal is being transmitted.

PROGRAMMING TROUBLE-DIAGNOSIS

If the HomeLink® does not quickly learn the hand-held transmitter information:

- replace the hand-held transmitter batteries with new batteries.
- position the hand-held transmitter with its battery area facing away from the HomeLink® surface.
- press and hold both the HomeLink® and hand-held transmitter buttons without interruption.
- position the hand-held transmitter 1 - 3 inches (26 - 76 mm) away from the HomeLink® surface. Hold the transmitter in that position for up to 15 seconds. If HomeLink® is not programmed within that time, try holding the transmitter in another position – keeping the indicator light in view at all times.

If you continue to have programming difficulties, please contact the NISSAN Consumer Affairs Department. The phone numbers are located in the Foreword of this manual.

CLEARING THE PROGRAMMED INFORMATION

Individual buttons cannot be cleared. However, to clear all programming, press and hold the two outside buttons and release when the indicator light begins to flash (approximately 20 seconds).

ROLLING CODE PROGRAMMING

Rolling code garage door openers (or other rolling code devices) which are “code protected” and manufactured after 1996, may be determined by the following:

- Reference the garage door opener Owner’s Manual for verification.
- The hand-held transmitter appears to program the HomeLink® Universal Transceiver but does not activate the garage door.
- Press and hold the trained HomeLink® button. If the garage door opener has the rolling code feature, the HomeLink® indicator light will flash rapidly, then remain on after 2 seconds.

To program the HomeLink® Universal Transceiver to a garage door opener with the rolling code feature, follow these instructions after completing the “Programming HomeLink®” (the aid of a second person may make the following procedures quicker and easier).

1. Locate the training button on the garage door opener motor unit. Exact location and color of the button may vary by garage door opener brand. If there is difficulty locating the training button, reference the garage door opener Owner’s Manual.
2. Press the training button on the garage door opener motor unit (which may activate a training light).

NOTE:

Following step 2, there are 30 seconds in which to initiate step 3.

3. Firmly press and release the programmed HomeLink® button a second time to complete the training process. (Some garage door openers may require you to do this procedure a third time to complete the training.)

The garage door opener should now recognize the HomeLink® Universal Transceiver and activate when the HomeLink® button is pressed. The remaining two buttons may now be programmed (if not yet programmed, follow steps 2 through 4 in the “Programming HomeLink®” procedures earlier in this section).

REPROGRAMMING A SINGLE HOMELINK® BUTTON

To reprogram a HomeLink® Universal Transceiver button, complete the following.

1. Press and hold the desired HomeLink® button. **Do not** release the button until step 4 has been completed.
2. When the indicator light begins to flash slowly (after 20 seconds), position the hand-held transmitter 1 - 3 inches (26 - 76 mm) away from the HomeLink® surface.
3. Press and hold the hand-held transmitter button.
4. The HomeLink® indicator light will flash, first slowly and then rapidly. When the indicator light begins to flash rapidly, release both buttons.

The HomeLink® Universal Transceiver button has now been reprogrammed. The new device can be activated by pushing the HomeLink® button that was just programmed. This procedure will not affect any other programmed HomeLink® buttons.

IF YOUR VEHICLE IS STOLEN

If your vehicle is stolen, you should change the codes of any non-rolling code device that has been programmed into HomeLink®. Consult the Owner’s Manual of each device or call the manufacturer or dealer of those devices for additional information.

When your vehicle is recovered, you will need to reprogram the HomeLink® Universal Transceiver with your new transmitter information.

FCC Notice:

This device complies with FCC rules part 15 and RSS-210 of Industry Canada. Operation is subject to the following two conditions:

(1) This device may not cause harmful interference and (2) This device must accept any interference that may be received, including interference that may cause undesired operation.

This transmitter has been tested and complies with FCC and DOC/MDC rules. Changes or modifications not expressly approved by the party responsible for compliance could void the user's authority to operate the equipment.

DOC: ISTC 1763K1313

FCC I.D. CV2V67690

MEMO

3 Pre-driving checks and adjustments

Keys 3-2
NISSAN Intelligent Key™ 3-2
NISSAN Vehicle Immobilizer System keys 3-3
Doors 3-4
Locking with key. 3-4
Locking with inside lock knob 3-5
Locking with power door lock switch 3-5
Automatic door locks 3-5
Child safety rear door lock (Sedan only). 3-6
NISSAN Intelligent Key™ With Door and Trunk Request Switches 3-6
Operating range. 3-8
Door locks/unlocks precaution 3-9
NISSAN Intelligent Key™ operation 3-9
How to use the remote keyless entry function 3-12
Warning signals 3-15
Troubleshooting guide 3-16
NISSAN Intelligent Key™ Without Door and Trunk Request Switches 3-17
Operating range. 3-18
How to use the remote keyless entry function 3-18
Warning signals 3-21
Troubleshooting guide 3-22
Hood 3-23
Trunk lid 3-23
Opener operation. 3-23
Interior trunk lid release 3-24
Fuel-filler door 3-25
Opener operation. 3-25
Fuel-filler cap 3-25
Tilt/telescopic steering 3-28
Tilt operation. 3-28
Telescopic operation. 3-28
Sun visors 3-28
Vanity mirrors (if so equipped). 3-29
Mirrors 3-29
Rearview mirror (if so equipped). 3-29
Automatic anti-glare rearview mirror (if so equipped) 3-30
Outside mirrors 3-31

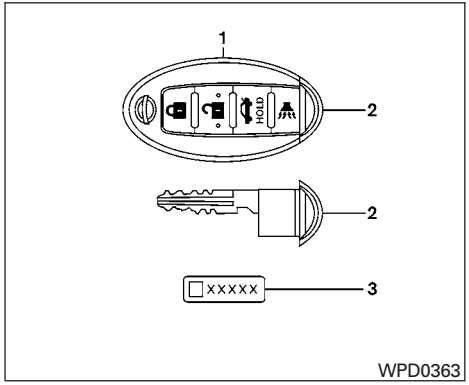

1. Two Intelligent Keys
2. Mechanical keys (inside Intelligent Keys)
3. Key number plate

NISSAN INTELLIGENT KEY™

Your vehicle can only be driven with the Intelligent Key which are registered to your vehicle's Intelligent Key components and NISSAN Vehicle Immobilizer System components.

Never leave these keys in the vehicle.

As many as four Intelligent Keys can be registered and used with one vehicle. The new keys must be registered by a NISSAN dealer prior to use with the Intelligent Key and NISSAN Vehicle Immobilizer System of your vehicle. Since the registration process requires erasing all memory in the Intelligent Key components when registering new keys, be sure to take all Intelligent Keys that you have to the NISSAN dealer.

A key number plate is supplied with your keys. Record the key number and keep it in a safe place (such as your wallet), not in the vehicle. If you lose your keys, see a NISSAN dealer for duplicates by using the key number. NISSAN does not record key numbers so it is very important to keep track of your key number plate.

A key number is only necessary when you have lost all keys and do not have one to duplicate from. If you still have a key, your NISSAN dealer can duplicate it.

⚠ CAUTION

Listed below are conditions or occurrences which will damage the Intelligent Key:

- **Do not allow the Intelligent Key, which contains electrical components, to come into contact with water or salt water. This could affect the system function.**
- **Do not drop the Intelligent Key.**
- **Do not strike the Intelligent Key sharply against another object.**
- **Do not change or modify the Intelligent Key.**
- **Wetting may damage the Intelligent Key. If the Intelligent Key gets wet, immediately wipe until it is completely dry.**
- **Do not place the Intelligent Key for an extended period in an area where temperatures exceed 140°F (60°C).**
- **Do not attach the Intelligent Key with a key holder that contains a magnet.**
- **Do not place the Intelligent Key near equipment that produces a magnetic field, such as a TV, audio equipment and personal computers.**

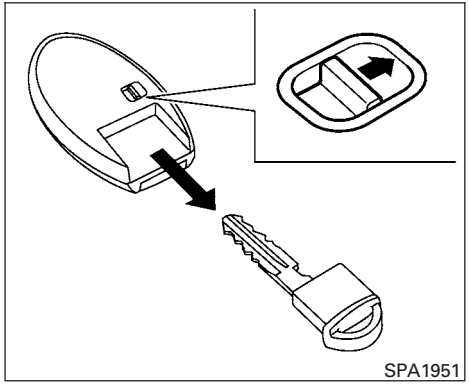

Mechanical key

The Intelligent Key contains the mechanical key.

To remove the mechanical key, release the lock knob on the back of the Intelligent Key.

To install the mechanical key, firmly insert it into the Intelligent Key until the lock knob returns to the lock position.

Use the mechanical key to lock or unlock the doors, trunk lid, glove box and rear seatback lock.

See “Doors” and “Trunk lid” in this section, “Storage” in the “Instruments and controls” section, “Seats” in the “Safety — Seats, seat belts and supplemental restraint system” section, and “Upper tether anchor/key cylinder covers” in the “Maintenance and do-it-yourself” section of this manual.

⚠ CAUTION

Always carry the mechanical key installed in the Intelligent Key slot.

Valet hand-off

When you have to leave a key with a valet, give them the Intelligent Key itself and keep the mechanical key with you to protect your belongings.

To prevent the glove box and the trunk from being opened during valet hand-off, follow the procedures below:

1. Push the trunk cancel switch to the OFF position.
2. Remove the mechanical key from the Intelligent Key.
3. Lock the glove box and the rear seats with the mechanical key.
4. Hand the Intelligent Key to the valet and keep the mechanical key with you.

See “Trunk lid” in this section, “Storage” in the “Instruments and controls” section and “Seats” in the “Safety — seats, seat belts and supplemental restraint system” section.

NISSAN VEHICLE IMMOBILIZER SYSTEM KEYS

You can only drive your vehicle using the master keys which are registered to the NISSAN Vehicle Immobilizer System components in your vehicle.

The master key can be used for all the locks.

Never leave these keys in the vehicle.

Additional or replacement keys:

If you still have a key, the key number is not necessary when you need extra NISSAN Vehicle Immobilizer System keys. Your dealer can duplicate your existing key. This is because the registration process will erase the memory of all key codes previously registered into the NISSAN Vehicle Immobilizer System.

Do not allow the immobilizer system key, which contains an electrical transponder, to come into contact with salt water. This could affect system function.

When the doors are locked using one of the following methods, the doors can not be opened using the inside or outside door handles. The doors must be unlocked to open the doors.

⚠ WARNING

- **Always have the doors locked while driving. Along with the use of seat belts, this provides greater safety in the event of an accident by helping to prevent persons from being thrown from the vehicle. This also helps keep children and others from unintentionally opening the doors, and will help keep out intruders.**
- **Before opening any door, always look for and avoid oncoming traffic.**
- **Do not leave children unattended inside the vehicle. They could unknowingly activate switches or controls. Unattended children could become involved in serious accidents.**

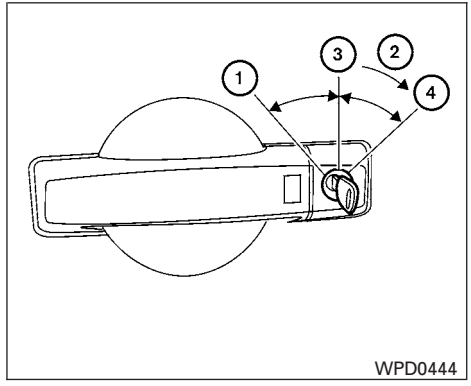

Driver's side

LOCKING WITH KEY

The power door lock system allows you to lock or unlock all doors at the same time.

Turning the key toward the front ① of the vehicle locks all doors.

Turning the key one time toward the rear ② of the vehicle unlocks that door. From that position, returning the key to neutral ③ (where the key can only be removed and inserted) and turning it toward the rear again within 5 seconds unlocks all doors ④.

Opening and closing windows (if so equipped)

The driver's door key operation allows you to open and close windows equipped with automatic operation at the same time.

- To open the windows, turn the driver's door key toward the rear of the vehicle for **longer than 1 second** after the door is unlocked.
- To close the windows, turn the driver's door key toward the front of the vehicle for **longer than 1 second** after the door is locked.

Windows stop when the key cylinder is released.

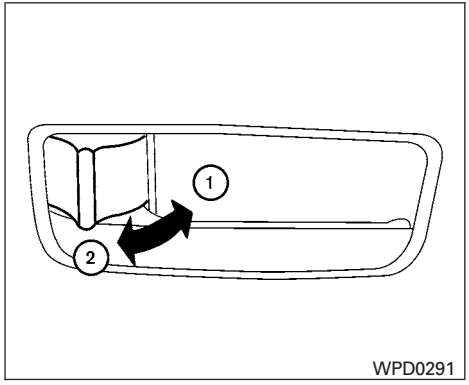

Inside lock

LOCKING WITH INSIDE LOCK KNOB

To lock the door without the key, move the inside lock knob to the lock position ①, then close the door.

To unlock the door without the key, move the inside lock knob to the unlock position ②.

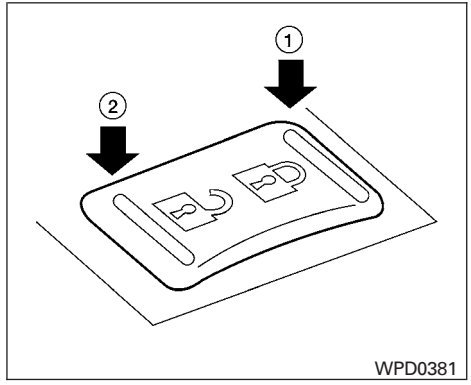

Door lock switch

LOCKING WITH POWER DOOR LOCK SWITCH

To lock all the doors without a key, push the door lock switch (driver's or front passenger's side) to the lock position ①. When locking the door this way, be certain not to leave the key inside the vehicle.

To unlock all the doors without a key, push the door lock switch (driver's or front passenger's side) to the unlock position ②.

Lockout protection

When the power door lock switch (driver's or front passenger's side) is moved to the lock position with the Intelligent Key in the port and any door open, all doors will lock and unlock automatically. With the Intelligent Key left in the vehicle (not in the Intelligent Key port) and any door open, all doors will unlock automatically and a chime will sound after the door is closed.

AUTOMATIC DOOR LOCKS

- All doors lock automatically when the vehicle speed reaches 15 MPH (24 km/h).
- All doors unlock automatically when the ignition switch is placed in the OFF position.

The automatic unlock function can be deactivated or activated. To deactivate or activate the automatic door unlock system, perform the following procedure:

1. Close all doors.
2. Place the ignition switch in the ON position.
3. Within 20 seconds of performing Step 2, push and hold the power door lock switch to the 🔓 position (UNLOCK) for more than 5 seconds.

4. When activated, the hazard indicator will flash twice. When deactivated, the hazard indicator will flash once.
5. The ignition switch must be placed in the OFF and ON position again between each setting change.

When the automatic door unlock system is deactivated, the doors do not unlock when the ignition switch is placed in the OFF position. To unlock the door manually, use the inside lock knob or the power door lock switch (driver's or front passenger's side).

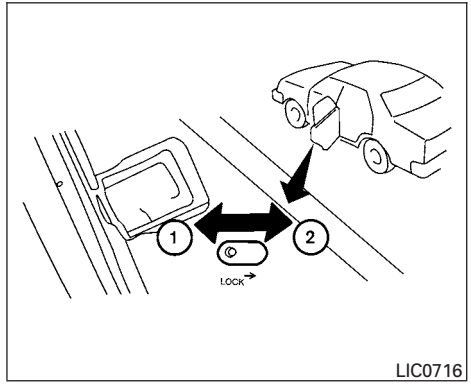

LIC0716

CHILD SAFETY REAR DOOR LOCK (Sedan only)

Child safety locks help prevent the rear doors from being opened accidentally, especially when small children are in the vehicle.

The child safety lock levers are located on the edge of the rear doors.

When the lever is in the unlock position ①, the door can be opened from the outside or the inside.

When the lever is in the LOCK position ②, the door can be opened only from the outside.

NISSAN INTELLIGENT KEY™ WITH DOOR AND TRUNK REQUEST SWITCHES

⚠ WARNING

- **Radio waves could adversely affect electric medical equipment. Those who use a pacemaker should contact the electric medical equipment manufacturer for the possible influences before use.**
- **The Intelligent Key transmits radio waves when the buttons are pressed. The FAA advises the radio waves may affect aircraft navigation and communication systems. Do not operate the Intelligent Key while on an airplane. Make sure the buttons are not operated unintentionally when the unit is stored for a flight.**

The Intelligent Key can operate all the door locks using the remote controller function or pushing the request switch on the vehicle without taking the key out from a pocket or purse. The operating environment and/or conditions may affect the Intelligent Key operation.

Be sure to read the following before using the Intelligent Key.

⚠ CAUTION

- **Be sure to carry the Intelligent Key with you when operating the vehicle.**
- **Never leave the Intelligent Key in the vehicle when you leave the vehicle.**

The Intelligent Key is always communicating with the vehicle as it receives radio waves. The Intelligent Key transmits weak radio waves. Environmental conditions may interfere with the operation of the Intelligent Key under the following operating conditions:

- When operating near a location where strong radio waves are transmitted, such as a TV tower, power station and broadcasting station.
- When in possession of wireless equipment, such as a cellular telephone, transceiver, and CB radio.
- When the Intelligent Key is in contact with or covered by metallic materials.
- When any type of radio wave remote control is used nearby.
- When the Intelligent Key is placed near an electric appliance such as a personal computer.
- When the vehicle is parked near a parking meter.

In such cases, correct the operating conditions before using the Intelligent Key function or use the mechanical key.

Although the life of the battery varies depending on the operating conditions, the battery's life is approximately 2 years. If the battery is discharged, replace it with a new one.

When the Intelligent Key battery is almost discharged, insert the Intelligent Key into the Intelligent Key port to start the engine. Replace the discharged battery with a new one as soon as possible. For more details, see "Push-button ignition switch" in the "Starting and driving" section.

Since the Intelligent Key is continuously receiving radio waves, if the key is left near equipment which transmits strong radio waves, such as signals from a TV and personal computer, the battery life may become shorter.

For information regarding replacement of a battery, see "Battery replacement" in the "Maintenance and do-it-yourself" section.

As many as 4 Intelligent Keys can be registered and used with one vehicle. For information about the purchase and use of additional Intelligent Keys, contact a NISSAN dealer.

⚠ CAUTION

Listed below are conditions or occurrences which will damage the Intelligent Key:

- **Do not allow the Intelligent Key, which contains electrical components, to come into contact with water or salt water. This could affect the system function.**
- **Do not drop the Intelligent Key.**
- **Do not strike the Intelligent Key sharply against another object.**
- **Do not change or modify the Intelligent Key.**
- **Wetting may damage the Intelligent Key. If the Intelligent Key gets wet, immediately wipe until it is completely dry.**
- **Do not place the Intelligent Key for an extended period in an area where temperatures exceed 140°F (60°C).**
- **Do not attach the Intelligent Key with a key holder that contains a magnet.**
- **Do not place the Intelligent Key near equipment that produces a magnetic field, such as a TV, audio equipment and personal computers.**

If an Intelligent Key is lost or stolen, NISSAN recommends erasing the ID code of that Intelligent Key from the vehicle. This may prevent the unauthorized use of the Intelligent Key to operate the vehicle. For information regarding the erasing procedure, contact a NISSAN dealer.

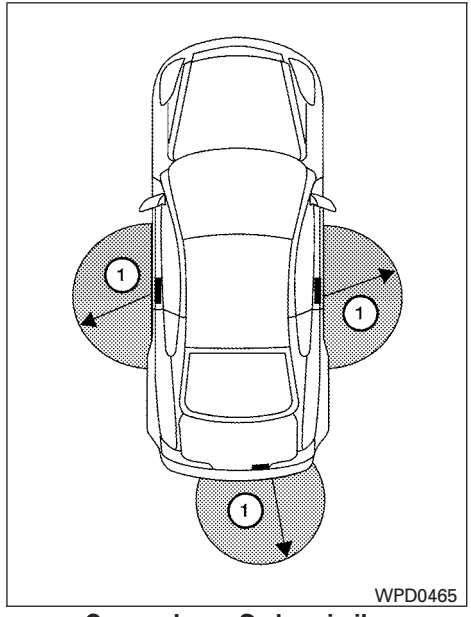

Coupe shown Sedan similar

OPERATING RANGE

The Intelligent Key functions can only be used when the Intelligent Key is within the specified operating range from the request switch ①.

When the Intelligent Key battery is discharged or strong radio waves are present near the operating location, the Intelligent Key system's operating range becomes narrower, and the Intelligent Key may not function properly.

The operating range is within 31.50 in (80 cm) from each request switch ①.

If the Intelligent Key is too close to the door glass, handle or rear bumper, the request switches may not function.

When the Intelligent Key is within the operating range, it is possible for anyone, even someone who does not carry the Intelligent Key, to push the request switch to lock/unlock the doors.

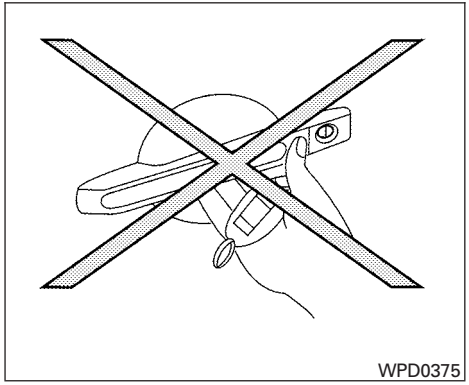

DOOR LOCKS/UNLOCKS PRECAUTION

- Do not push the door handle request switch with the Intelligent Key held in your hand as illustrated. The close distance to the door handle will cause the Intelligent Key system to have difficulty recognizing that the Intelligent Key is outside the vehicle.
- After locking with the door handle request switch, verify the doors are securely locked by testing them.
- To prevent the Intelligent Key from being left inside the vehicle, make sure you carry the Intelligent Key with you and then lock the doors.
- Do not pull the door handle before pushing the door handle request switch. The door will be unlocked but will not open. Release the door handle once and pull it again to open the door.

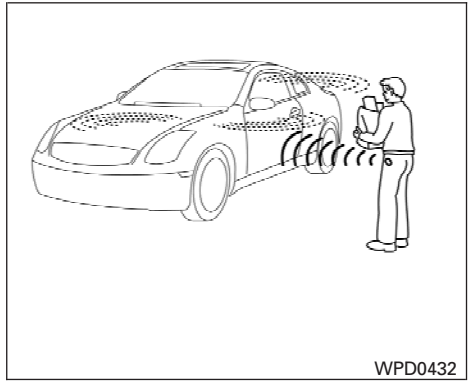

Coupe shown, Sedan similar

NISSAN INTELLIGENT KEY™ OPERATION

You can lock or unlock the doors without taking the key out of your pocket or bag.

When you carry the Intelligent Key with you, you can lock or unlock all doors by pushing the door handle request switch within the range of operation.

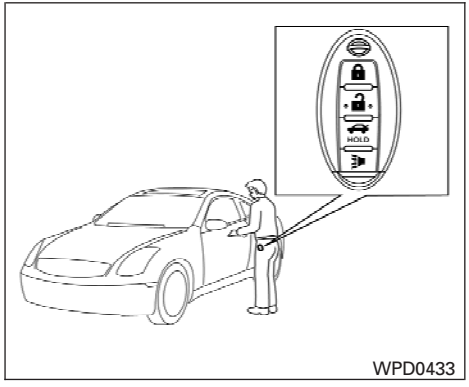

Coupe shown, Sedan similar

Locking doors

1. Move the shift selector to the P (Park) position, place the ignition switch in the LOCK position and make sure you carry the Intelligent Key with you.
2. Close all doors.
3. Push any door handle request switch ① while carrying the Intelligent Key with you.
4. All doors and the trunk will lock.
5. The hazard warning lights flash twice and the outside buzzer sounds twice.

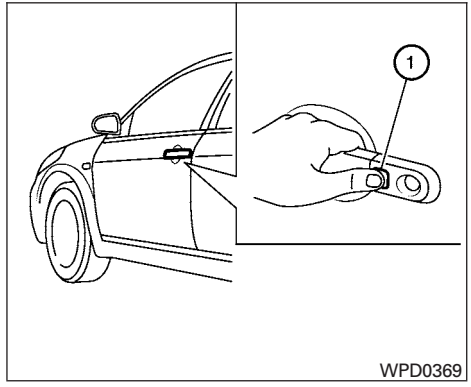

NOTE:

- Doors lock with the door handle request switch while the ignition switch is not in the LOCK position.
- Doors do not lock by pushing the door handle request switch while any door is open. However, doors lock with the mechanical key even if any door is open.
- Doors do not lock with the door handle request switch with the Intelligent Key inside the vehicle and a beep sounds to warn you. However, when an Intelligent Key is inside the vehicle, doors can be locked with another Intelligent Key.

⚠ CAUTION

- **After locking the doors using the request switch, make sure that the doors have been securely locked by operating the door handle or the trunk opener switch.**
- **When locking the doors using the request switch, make sure to have the Intelligent Key in your possession before operating the request switch to prevent the Intelligent Key from being left in the vehicle.**
- **The request switch is operational only when the Intelligent Key has been detected by the Intelligent Key system.**

Lockout protection

To prevent the Intelligent Key from being accidentally locked in the vehicle, lockout protection is equipped with the Intelligent Key.

When the driver's side door is open, the doors are locked, and then the Intelligent Key is put inside the vehicle and all the doors are closed; the lock will automatically unlock and the door buzzer sounds.

NOTE:

The doors may not lock when the Intelligent Key is in the same hand that is operating the request switch to lock the door. Put the Intelligent Key in a purse, pocket or your other hand.

⚠ CAUTION

The lockout protection may not function under the following conditions:

- **When the Intelligent Key is placed on top of the instrument panel.**
- **When the Intelligent Key is placed on top of the rear parcel shelf.**
- **When the Intelligent Key is placed inside the glove box or a storage bin.**
- **When the Intelligent Key is placed inside the door pockets.**
- **When the Intelligent Key is placed on or under the spare tire area.**
- **When the Intelligent Key is placed inside or near metallic materials.**

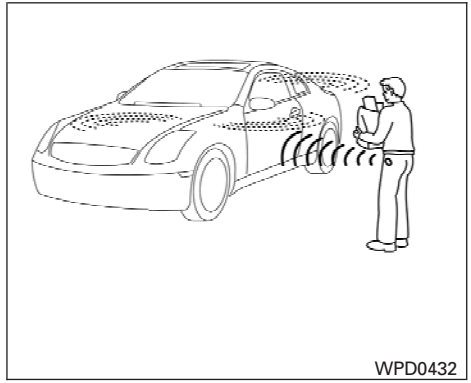

Coupe shown, Sedan similar

Unlocking doors

1. Carry the Intelligent Key.
2. Push the door handle request switch ①.
3. The hazard warning lights flash once and the outside buzzer sounds once.
4. Push the door handle request switch ① again within 5 seconds to unlock all doors.

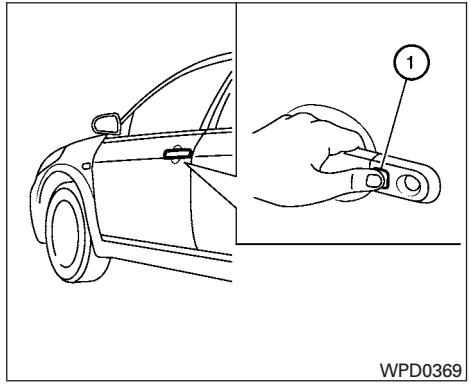

If a door handle is pulled while unlocking the doors, that door may not be unlocked. Returning the door handle to its original position will unlock the door. If the door does not unlock after returning the door handle, push the door handle request switch to unlock the door.

All doors will be locked automatically unless one of the following operations is performed within 1 minute after pushing the request switch.

- Opening any door.
- Pushing the ignition switch.

The interior light timer illuminates for 30 seconds when a door is unlocked and the room light switch is in the DOOR position.

The interior light can be turned off without waiting for 30 seconds by performing one of the following operations.

- Placing the ignition switch in the ON position.
- Locking the doors with the remote controller.
- Switching the room light switch to the OFF position.

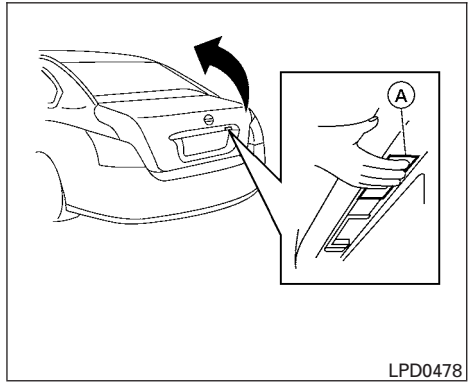

Opening the trunk lid

1. Push the trunk opener request switch Ⓐ for more than 1 second while carrying the Intelligent Key with you.
2. The trunk will unlatch. A chime will sound 4 times.
3. Raise the trunk lid to open the trunk.

Lockout protection

To prevent the Intelligent Key from being accidentally locked in the trunk, lockout protection is equipped with the Intelligent Key.

When all doors are locked and the trunk lid is closed with the Intelligent Key inside the trunk, the outside buzzer will sound and the trunk will open.

HOW TO USE THE REMOTE KEYLESS ENTRY FUNCTION

The remote keyless entry function can operate all door locks using the remote keyless function of the Intelligent Key. The remote keyless function can operate at a distance of 33 ft (10 m) away from the vehicle. The operating distance depends upon the conditions around the vehicle.

The remote keyless entry function will not function under the following conditions:

- When the Intelligent Key is not within the operational range.
- When the doors or the trunk are open or not closed securely.
- When the Intelligent Key battery is discharged.

⚠ CAUTION

When locking the doors using the Intelligent Key, be sure not to leave the key in the vehicle.

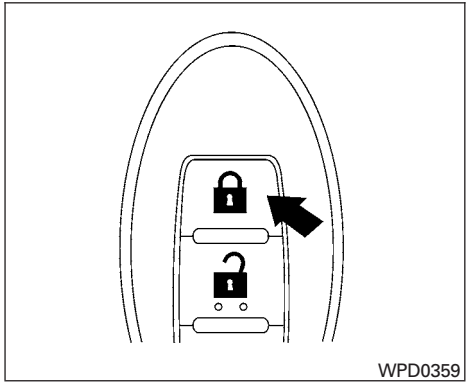

Locking doors

1. Place the ignition switch in the LOCK position.
2. Close all doors.
3. Press the button on the Intelligent Key.
4. The hazard warning lights flash twice and the horn beeps once.
5. All doors will be locked.

CAUTION

After locking the doors using the Intelligent Key, be sure that the doors have been securely locked by operating the door handles.

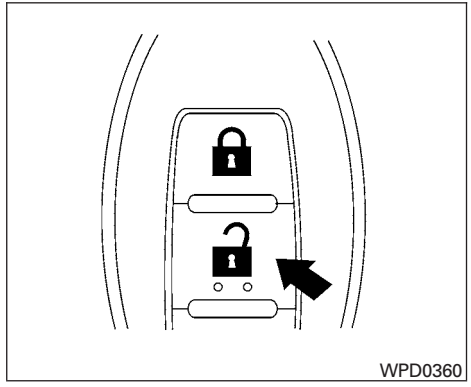

Unlocking doors

1. Press the button on the Intelligent Key.
2. The hazard warning lights flash once.
3. Press the button again within 5 seconds to unlock all doors.

All doors will be locked automatically unless one of the following operations is performed within 1 minute after pressing the button:

- Opening any doors.
- Pushing the ignition switch.

The interior light illuminates for 15 seconds when a door is unlocked and the room light switch is in the DOOR position.

The light can be turned off without waiting for 15 seconds by performing one of the following operations:

- Placing the ignition switch in the ON position.
- Locking the doors with the Intelligent Key.
- Switching the room light switch to the OFF position.

Opening windows (if so equipped)

The Intelligent Key allows you to open windows equipped with automatic operation simultaneously.

- To open the windows, press the button on the Intelligent Key **longer than 3 seconds** after all doors are unlocked.

The door windows will open while pressing the button on the Intelligent Key.

The door windows cannot be closed by using the Intelligent Key.

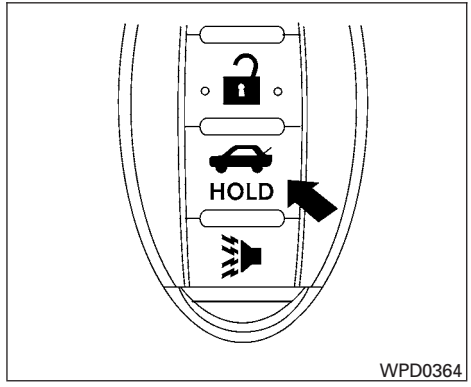

WPD0364

Releasing the trunk lid

Press the HOLD button for longer than 0.5 seconds to open the trunk lid. The trunk release button will not operate when the ignition switch is in the ON position or when the trunk cancel switch is in the OFF position. See “Cancel switch” in this section.

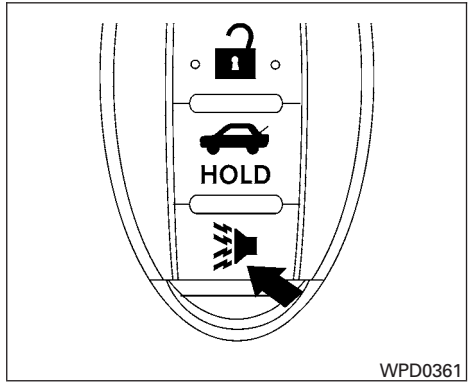

WPD0361

Using the panic alarm

If you are near your vehicle and feel threatened, you may activate the panic alarm to call attention by pressing and holding the button on the Intelligent Key for **longer than 0.5 seconds.**

The panic alarm and headlights will stay on for 25 seconds.

The panic alarm stops when:

- It has run for 25 seconds, or
- Any button is pressed on the Intelligent Key.
- Pushing the request switch on the driver or passenger door with the Intelligent Key in range of the door handle.

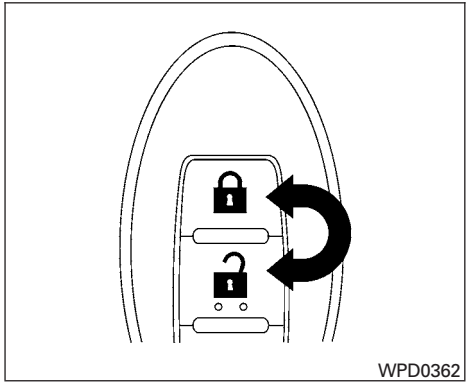

Silencing the horn beep feature

If desired, the horn beep feature can be deactivated using the Intelligent Key.

To deactivate: Press and hold the 🔒 and 🔓 buttons **for at least 2 seconds.**

The hazard warning lights will flash 3 times to confirm that the horn beep feature has been deactivated.

To activate: Press and hold the 🔒 and 🔓 buttons **for at least 2 seconds once more.**

The hazard warning lights will flash once and the horn will sound once to confirm that the horn beep feature has been reactivated.

Deactivating the horn beep feature does not silence the horn if the alarm is triggered.

WARNING SIGNALS

To help prevent the vehicle from moving unexpectedly by erroneous operation of the Intelligent Key or to help prevent the vehicle from being stolen, a chime or buzzer sounds from inside and outside the vehicle and a warning is displayed in the instrument panel.

When a chime or beep sounds or a warning is displayed, be sure to check the vehicle and the Intelligent Key.

See the “Troubleshooting guide” that follows and “Vehicle information display” in the “Instruments and controls” section of this manual.

TROUBLESHOOTING GUIDE

Verify the location of all Intelligent Keys that are programmed for the vehicle. If another Intelligent Key is in range or inside the vehicle, the vehicle system may respond differently than expected.

Symptom		Possible Cause	Remedy
When pushing the ignition switch to stop the engine	The SHIFT P warning appears on the display and the inside warning chime sounds continuously.	The shift selector is not in the P (Park) position.	Shift the shift selector to the P (Park) position.
When opening the driver's door to get out of the vehicle	The inside warning chime sounds continuously.	The ignition switch is placed in the ACC position.	Place the ignition switch in the OFF position.
		The Intelligent Key is in the Intelligent Key port.	Remove the Intelligent Key from the Intelligent Key port.
When closing the door after getting out of the vehicle	The NO KEY warning appears on the display, the outside chime sounds 3 times and the inside warning chime sounds for approximately 3 seconds.	The ignition switch is placed in the ACC or ON position.	Place the ignition switch in the OFF position.
	The NO KEY warning appears on the display and the outside chime sounds continuously.	The ignition switch is placed in the ACC position and the shift selector is not in the P (Park) position.	Move the shift selector to the P (Park) position and place the ignition switch in the OFF position.
	The shift "P" warning light appears on the display and the outside chime sounds continuously.	The ignition switch is placed in the OFF position and the shift selector is not in the P (Park) position.	Move the shift selector to the P (Park) position.
When closing the door with the inside lock knob placed in the LOCK position	The outside chime sounds for approximately 3 seconds and all the doors unlock.	The Intelligent Key is inside the vehicle or trunk.	Carry the Intelligent Key with you.
When pushing the door handle request switch to lock the door	The outside chime sounds for approximately 2 seconds.	The Intelligent Key is inside the vehicle or trunk.	Carry the Intelligent Key with you.
		A door is not closed securely.	Close the door securely.
		The door handle request switch is pushed before the door is closed.	Push the door handle request switch after the door is closed.
When closing the trunk lid	The outside chime sounds for approximately 10 seconds and the trunk lid opens.	The Intelligent Key is inside the trunk.	Carry the Intelligent Key with you.

NISSAN INTELLIGENT KEY™ WITHOUT DOOR AND TRUNK REQUEST SWITCHES

⚠ WARNING

- **Radio waves could adversely affect electric medical equipment. Those who use a pacemaker should contact the electric medical equipment manufacturer for the possible influences before use.**
- **The Intelligent Key transmits radio waves when the buttons are pressed. The FAA advises the radio waves may affect aircraft navigation and communication systems. Do not operate the Intelligent Key while on an airplane. Make sure the buttons are not operated unintentionally when the unit is stored for a flight.**

The Intelligent Key can operate all the door locks using the remote controller function. The operating environment and/or conditions may affect the Intelligent Key operation.

Be sure to read the following before using the Intelligent Key.

⚠ CAUTION

- **Be sure to carry the Intelligent Key with you when operating the vehicle.**
- **Never leave the Intelligent Key in the vehicle when you leave the vehicle.**

The Intelligent Key is always communicating with the vehicle as it receives radio waves. The Intelligent Key transmits weak radio waves. Environmental conditions may interfere with the operation of the Intelligent Key under the following operating conditions:

- When operating near a location where strong radio waves are transmitted, such as a TV tower, power station and broadcasting station.
- When in possession of wireless equipment, such as a cellular telephone, transceiver, and CB radio.
- When the Intelligent Key is in contact with or covered by metallic materials.
- When any type of radio wave remote control is used nearby.
- When the Intelligent Key is placed near an electric appliance such as a personal computer.
- When the vehicle is parked near a parking meter.

In such cases, correct the operating conditions before using the Intelligent Key function or use the mechanical key.

Although the life of the battery varies depending on the operating conditions, the battery's life is approximately 2 years. If the battery is discharged, replace it with a new one.

When the Intelligent Key battery is almost discharged, insert the Intelligent Key into the Intelligent Key port to start the engine. Replace the discharged battery with a new one as soon as possible. For more details, see "Push-button ignition switch" in the "Starting and driving" section.

Since the Intelligent Key is continuously receiving radio waves, if the key is left near equipment which transmits strong radio waves, such as signals from a TV and personal computer, the battery life may become shorter.

For information regarding replacement of a battery, see "Battery replacement" in the "Maintenance and do-it-yourself" section.

As many as 4 Intelligent Keys can be registered and used with one vehicle. For information about the purchase and use of additional Intelligent Keys, contact a NISSAN dealer.

⚠ CAUTION

Listed below are conditions or occurrences which will damage the Intelligent Key:

- **Do not allow the Intelligent Key, which contains electrical components, to come into contact with water or salt water. This could affect the system function.**
- **Do not drop the Intelligent Key.**
- **Do not strike the Intelligent Key sharply against another object.**
- **Do not change or modify the Intelligent Key.**
- **Wetting may damage the Intelligent Key. If the Intelligent Key gets wet, immediately wipe until it is completely dry.**
- **Do not place the Intelligent Key for an extended period in an area where temperatures exceed 140°F (60°C).**
- **Do not attach the Intelligent Key with a key holder that contains a magnet.**
- **Do not place the Intelligent Key near equipment that produces a magnetic field, such as a TV, audio equipment and personal computers.**

If an Intelligent Key is lost or stolen, NISSAN recommends erasing the ID code of that Intelligent Key from the vehicle. This may prevent the unauthorized use of the Intelligent Key to operate the vehicle. For information regarding the erasing procedure, contact a NISSAN dealer.

OPERATING RANGE

The Intelligent Key functions can only be used when the Intelligent Key is within the specified operating range.

When the Intelligent Key battery is discharged or strong radio waves are present near the operating location, the Intelligent Key system's operating range becomes narrower, and the Intelligent Key may not function properly.

The operating range is within 33 ft (10 m) of the vehicle.

HOW TO USE THE REMOTE KEYLESS ENTRY FUNCTION

The remote keyless entry function can operate all door locks using the remote keyless function of the Intelligent Key. The remote keyless function can operate at a distance of 33 ft (10 m) away from the vehicle. The operating distance depends upon the conditions around the vehicle.

The remote keyless entry function will not function under the following conditions:

- When the Intelligent Key is not within the operational range.
- When the doors or the trunk are open or not closed securely.
- When the Intelligent Key battery is discharged.

⚠ CAUTION

When locking the doors using the Intelligent Key, be sure not to leave the key in the vehicle.

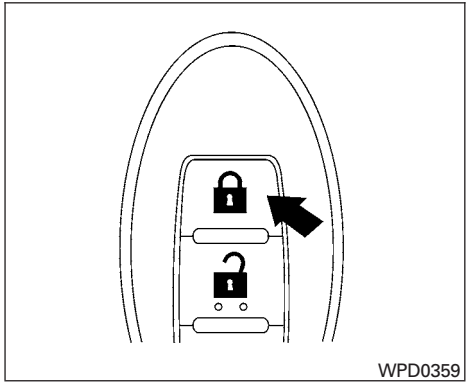
WPD0359

Locking doors

1. Place the ignition switch in the LOCK position.
2. Close all doors.
3. Press the button on the Intelligent Key.
4. The hazard warning lights flash twice and the horn beeps once.
5. All doors will be locked.

CAUTION

After locking the doors using the Intelligent Key, be sure that the doors have been securely locked by operating the door handles.

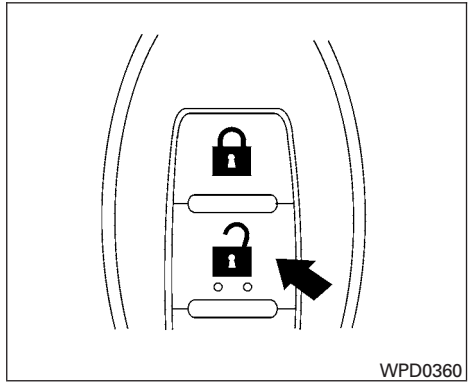
WPD0360

Unlocking doors

1. Press the button on the Intelligent Key.
2. The hazard warning lights flash once.
3. Press the button again within 5 seconds to unlock all doors.

All doors will be locked automatically unless one of the following operations is performed within 1 minute after pressing the button:

- Opening any doors.
- Pushing the ignition switch.

The interior light illuminates for 15 seconds when a door is unlocked and the room light switch is in the DOOR position.

The light can be turned off without waiting for 15 seconds by performing one of the following operations:

- Placing the ignition switch in the ON position.
- Locking the doors with the Intelligent Key.
- Switching the room light switch to the OFF position.

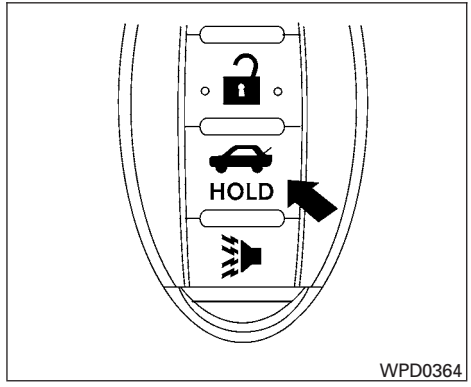

WPD0364

Releasing the trunk lid

Press the HOLD button for longer than 0.5 seconds to open the trunk lid. The trunk release button will not operate when the ignition switch is in the ON position or when the trunk cancel switch is in the OFF position. See “Cancel switch” in this section.

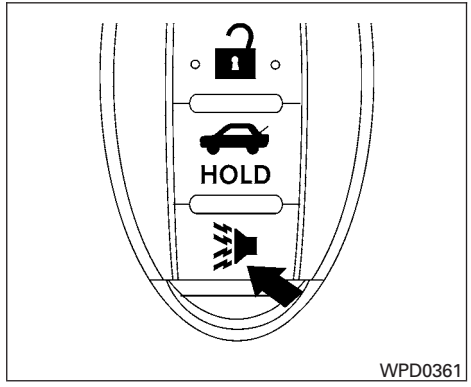

WPD0361

Using the panic alarm

If you are near your vehicle and feel threatened, you may activate the panic alarm to call attention by pressing and holding the button on the Intelligent Key for **longer than 0.5 seconds.**

The panic alarm and headlights will stay on for 25 seconds.

The panic alarm stops when:

- It has run for 25 seconds, or
- Any button is pressed on the Intelligent Key.

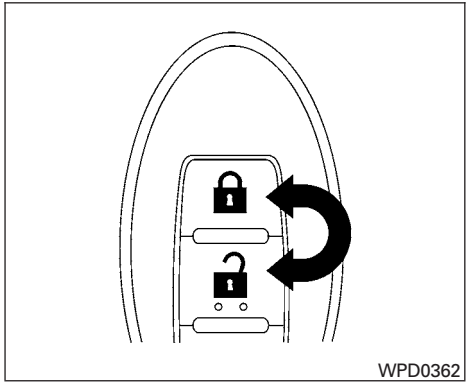

Silencing the horn beep feature

If desired, the horn beep feature can be deactivated using the Intelligent Key.

To deactivate: Press and hold the 🔒 and 🔓 buttons **for at least 2 seconds.**

The hazard warning lights will flash 3 times to confirm that the horn beep feature has been deactivated.

To activate: Press and hold the 🔒 and 🔓 buttons **for at least 2 seconds once more.**

The hazard warning lights will flash once and the horn will sound once to confirm that the horn beep feature has been reactivated.

Deactivating the horn beep feature does not silence the horn if the alarm is triggered.

WARNING SIGNALS

To help prevent the vehicle from moving unexpectedly by erroneous operation of the Intelligent Key or to help prevent the vehicle from being stolen, a chime or buzzer sounds from inside and outside the vehicle and a warning is displayed in the instrument panel.

When a chime or beep sounds or a warning is displayed, be sure to check the vehicle and the Intelligent Key.

See the “Troubleshooting guide” that follows and “Vehicle information display” in the “Instruments and controls” section of this manual.

TROUBLESHOOTING GUIDE

Verify the location of all Intelligent Keys that are programmed for the vehicle. If another Intelligent Key is in range or inside the vehicle, the vehicle system may respond differently than expected.

Symptom		Possible Cause	Remedy
When pushing the ignition switch to stop the engine	The SHIFT P warning appears on the display and the inside warning chime sounds continuously.	The shift selector is not in the P position.	Shift the shift selector to the P position.
When opening the driver's door to get out of the vehicle	The inside warning chime sounds continuously.	The ignition switch is in the ACC position.	Place the ignition switch in the OFF position.
		The Intelligent Key is in the Intelligent Key port.	Remove the Intelligent Key from the Intelligent Key port.
When closing the door after getting out of the vehicle	The NO KEY warning appears on the display, the outside chime sounds 3 times and the inside warning chime sounds for approximately 3 seconds.	The ignition switch is in the ACC or ON position.	Place the ignition switch in the OFF position.
	The NO KEY warning appears on the display and the outside chime sounds continuously.	The ignition switch is in the ACC position and the shift selector is not in the P (Park) position.	Move the shift selector to the P (Park) position and place the ignition switch in the OFF position.
When closing the door with the inside lock knob turned to LOCK	The outside chime sounds for approximately 3 seconds and all the doors unlock.	The Intelligent Key is inside the vehicle or trunk.	Carry the Intelligent Key with you.
When closing the trunk lid	The outside chime sounds for approximately 10 seconds and the trunk lid opens.	The Intelligent Key is inside the trunk.	Carry the Intelligent Key with you.

HOOD

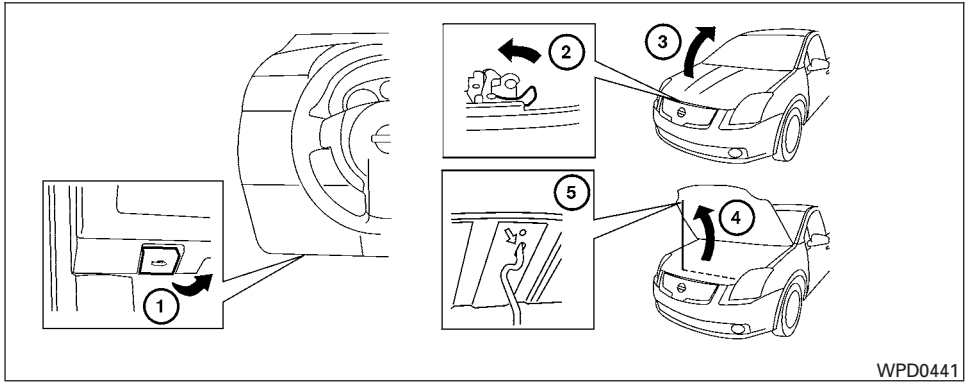

① Pull the hood lock release handle located below the driver's side instrument panel; the hood springs up slightly.

② Lift the lever at the front of the hood with your fingertips and raise the hood.

③ Remove the support rod from the clamp.

④ Insert the support rod into the hole on the passenger's side of the hood. ⑤

When closing the hood, return the hood rod to its original position. Lower the hood approximately 12 inches (30 cm) above the latch and release it. This allows proper engagement of the hood latch.

⚠ WARNING

- **Make sure the hood is completely closed and latched before driving. Failure to do so could cause the hood to fly open and result in an accident.**
- **If you see steam or smoke coming from the engine compartment, to avoid injury do not open the hood.**

TRUNK LID

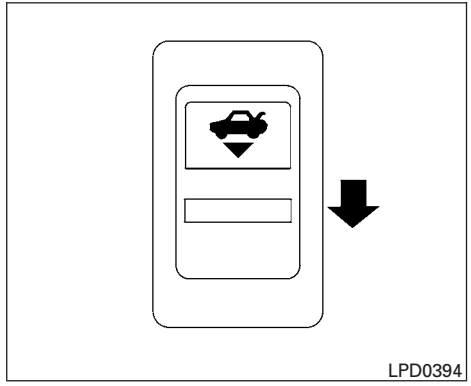

OPENER OPERATION

⚠ WARNING

- **Do not drive with the trunk lid open. This could allow dangerous exhaust gases to be drawn into the vehicle. See "Exhaust gas" in the "Starting and driving" section of this manual.**

- **Closely supervise children when they are around cars to prevent them from playing and becoming locked in the trunk where they could be seriously injured. Keep the car locked, with the rear seatback and trunk lid securely latched when not in use, and prevent children's access to car keys.**

To open the trunk lid, push the opener switch down.

To close the trunk lid, lower and push the trunk lid down securely.

NOTE:

You can open the trunk lid with the Intelligent Key. Refer to "NISSAN Intelligent Key™" in this section.

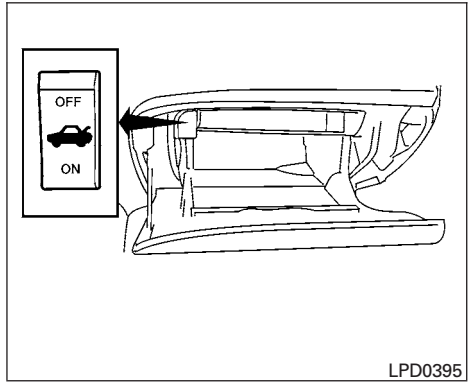

LPD0395

Cancel switch

When the switch, located inside the glove box, is in the OFF position, the power to the trunk lid will be cancelled. The trunk can only be opened with the master key or keyfob.

The trunk lid cannot be opened when:

- using the trunk lid release switch,
- the trunk open request switch (if so equipped) is pushed, when the Intelligent Key is in range of the vehicle or
- the HOLD button on the Intelligent Key is pressed.

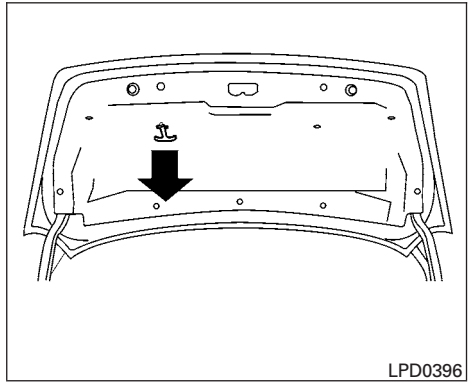
LPD0396

INTERIOR TRUNK LID RELEASE

⚠ WARNING

Closely supervise children when they are around cars to prevent them from playing and becoming locked in the trunk where they could be seriously injured. Keep the car locked, with the rear seatback and trunk lid securely latched when not in use, and prevent children's access to car keys.

The interior trunk lid release mechanism provides a means of escape for children and adults in the event they become locked inside the trunk.

To open the trunk from the inside, pull the illuminated release handle until the lock releases and push up on the trunk lid. The release handle is made of a material that glows in the dark after a brief exposure to ambient light.

The handle is located inside the trunk compartment on the interior of the trunk lid.

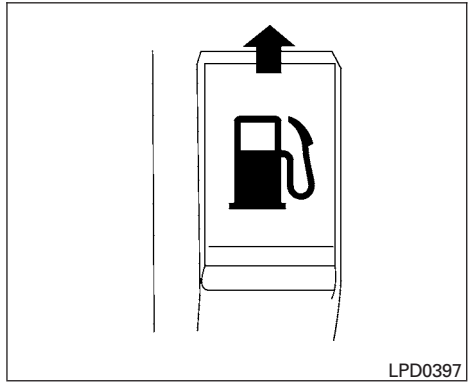

OPENER OPERATION

The fuel-filler door release is located on the floor to the left of the driver's seat. To open the fuel-filler door, pull up the release. To lock, close the fuel-filler door securely.

FUEL-FILLER CAP

⚠ WARNING

- **Gasoline is extremely flammable and highly explosive under certain conditions. You could be burned or seriously injured if it is misused or mishandled. Always stop the engine and do not smoke or allow open flames or sparks near the vehicle when refueling.**
- **Do not attempt to top off the fuel tank after the fuel pump nozzle shuts off automatically. Continued refueling may cause fuel overflow, resulting in fuel spray and possibly a fire.**
- **Use only an original equipment type fuel-filler cap as a replacement. It has a built-in safety valve needed for proper operation of the fuel system and emission control system. An incorrect cap can result in a serious malfunction and possible injury. It could also cause the SERVICE ENGINE SOON Malfunction Indicator Light (MIL) to come on.**
- **Never pour fuel into the throttle body to attempt to start your vehicle.**

- **Do not fill a portable fuel container in the vehicle or trailer. Static electricity can cause an explosion of flammable liquid, vapor or gas in any vehicle or trailer. To reduce the risk of serious injury or death when filling portable fuel containers:**
  - **Always place the container on the ground when filling.**
  - **Do not use electronic devices when filling.**
  - **Keep the pump nozzle in contact with the container while you are filling it.**
  - **Use only approved portable fuel containers for flammable liquid.**

⚠ CAUTION

- **The LOOSE FUEL CAP warning will appear if the fuel-filler cap is not properly tightened. Failure to tighten the fuel-filler cap properly after the LOOSE FUEL CAP warning appears may cause the SERVICE ENGINE SOON Malfunction Indicator Light (MIL) to illuminate.**
- **Failure to tighten the fuel-filler cap properly may cause the SERVICE ENGINE SOON Malfunction Indicator Light (MIL) to illuminate. If the SERVICE ENGINE SOON light illuminates because the fuel-filler cap is loose or missing, tighten or install the cap and continue to drive the vehicle. The SERVICE ENGINE SOON light should turn off after a few driving trips. If the SERVICE ENGINE SOON light does not turn off after a few driving trips, have the vehicle inspected by a NISSAN dealer.**
- **For additional information, see the "Malfunction Indicator Light (MIL)" in the "Instruments and Controls" section in this manual.**
- **If fuel is spilled on the vehicle body, flush it away with water to avoid paint damage.**

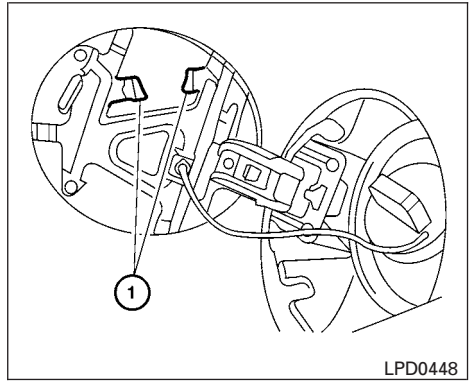

Coupe

To remove the fuel-filler cap:

1. Turn the fuel-filler cap counterclockwise to remove.
2. Put the fuel-filler cap on the cap holder ① while refueling.

To install the fuel-filler cap:

1. Insert the fuel-filler cap straight into the fuel-filler tube.
2. Turn the fuel-filler cap clockwise until it clicks. The fuel-filler cap is a ratcheting type.

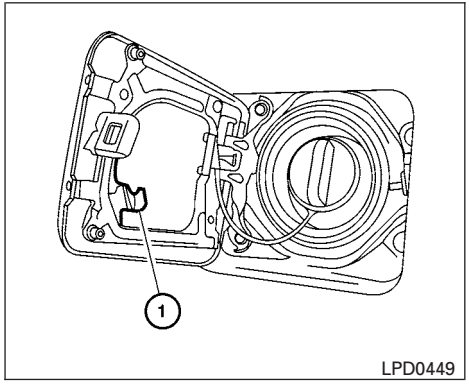

Sedan

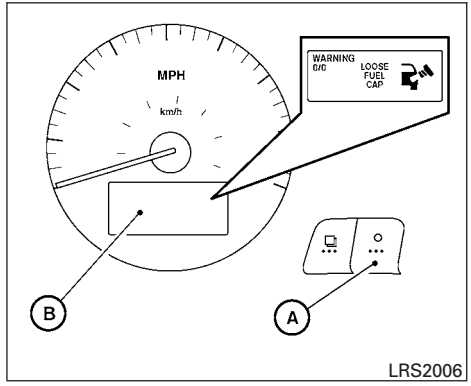

Loose Fuel Cap warning

The LOOSE FUEL CAP warning appears in the vehicle information display when the fuel-filler cap is not tightened correctly after the vehicle has been refueled. To turn off the warning, do the following:

1. Remove and install the fuel-filler cap as soon as possible. See “Fuel-filler cap”.
2. Tighten the fuel-filler cap until it clicks.
3. Press the ○ next button Ⓐ on the instrument panel located behind the steering wheel for about 1 second to turn off the LOOSE FUEL CAP warning Ⓑ after tightening the fuel-filler cap.

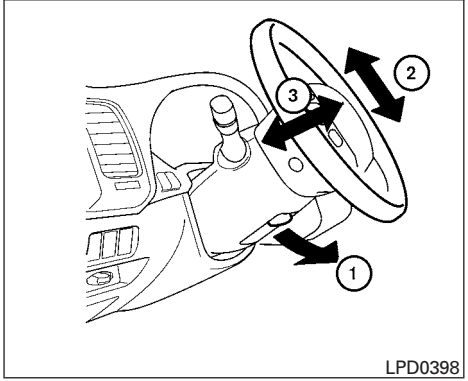

LPD0398

TILT OPERATION

Pull the lever ① all the way toward you and adjust the steering wheel up or down ② to the desired position. Lock the wheel by releasing the lever and ensure that the lever has returned to its original position.

⚠WARNING

Do not adjust the steering wheel while driving. You could lose control of your vehicle and cause an accident.

TELESCOPIC OPERATION

Pull the lever ① all the way toward you and adjust the steering wheel forward or backward in direction ③, to the desired position. Lock the wheel by releasing the lever and ensure that the lever has returned to its original position.

⚠WARNING

Do not adjust the steering wheel any closer to you than is necessary for proper steering operation and comfort. The driver's air bag inflates with great force. If you are unrestrained, leaning forward, sitting sideways or out of position in any way, you are at greater risk of injury or death in a crash. You may also receive serious or fatal injuries from the air bag if you are up against it when it inflates. Always sit back against the seatback and as far away as practical from the steering wheel. Always use the seat belts.

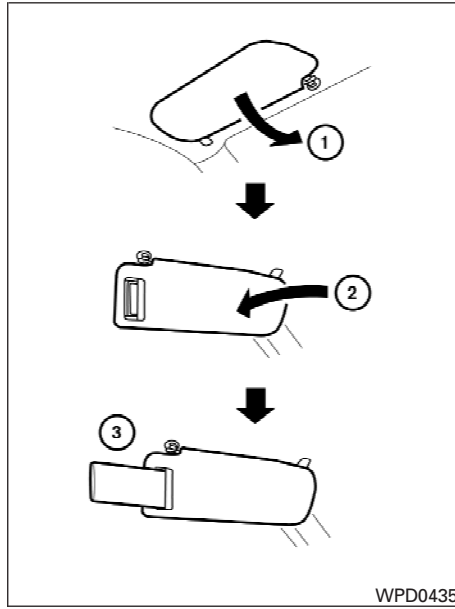

WPD0435

Coupe shown, sedan similar

① To block glare from the front, swing down the main sun visor.

② To block glare from the side, remove the sun visor from the center mount and swing the sun visor to the side.

③ Slide the extension sun visor (if so equipped) in or out as needed.

⚠ CAUTION

Do not store the sun visor before returning the extension to its original position.

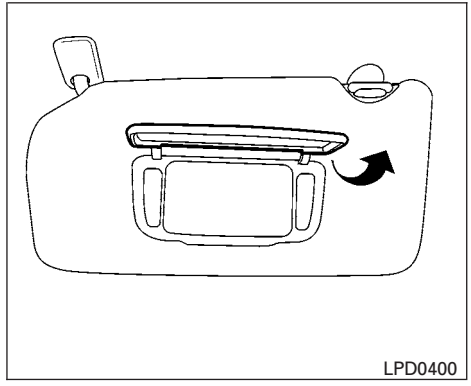

Coupe shown, sedan similar

VANITY MIRRORS (if so equipped)

To access the vanity mirror, pull the sun visor down and flip open the mirror cover. Some vanity mirrors are illuminated and turn on when the mirror cover is open.

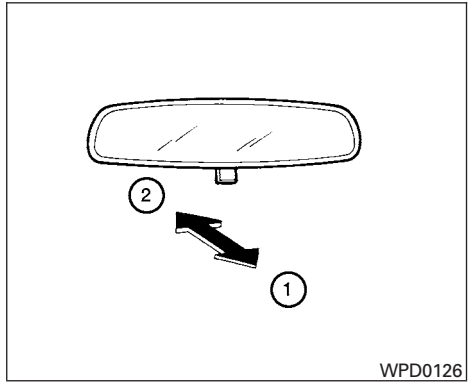

REARVIEW MIRROR (if so equipped)

The night position ① reduces glare from the headlights of vehicles behind you at night.

Use the day position ② when driving in daylight hours.

⚠ WARNING

Use the night position only when necessary, because it reduces rear view clarity.

AUTOMATIC ANTI-GLARE REARVIEW MIRROR (if so equipped)

The inside mirror is designed so that it automatically dims during night time conditions and according to the intensity of the headlights of the vehicle following you. The automatic anti-glare feature is activated when the ignition switch is in the ON position.

The indicator light will illuminate when the automatic anti-glare feature is operating.

NOTE:

Do not hang any objects over the sensors ① or apply glass cleaner to the sensors. Doing so will reduce the sensitivity of the sensors, resulting in improper operation.

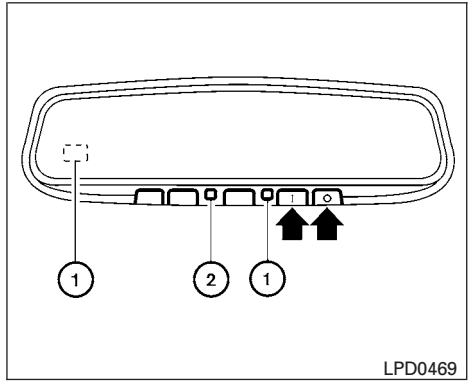

Type A-Without compass

Type A and Type B

The indicator light ② will illuminate when the automatic anti-glare feature is operating.

To turn off the automatic anti-glare feature, press:

- the O button for inside mirrors without compass.
- the ⏻ button for inside mirrors with compass.

The indicator light will turn off.

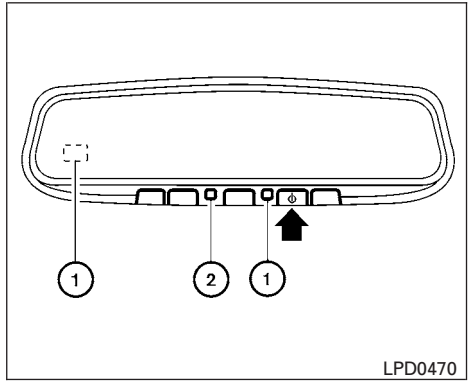

Type B-With compass

To turn on the automatic anti-glare feature again, press:

- the | button for inside mirrors without compass.
- the ⏻ button for inside mirrors with compass.

The indicator light will turn on.

For information on HomeLink® Universal Transceiver operation, see the “HomeLink® Universal Transceiver” in the “Instruments and controls” section of this manual.

For information on the compass display (if so equipped), see “Compass display” in the “Instruments and controls” section of this manual.

OUTSIDE MIRRORS

⚠ WARNING

- **Objects viewed in the outside mirror on the passenger side are closer than they appear. Be careful when moving to the right. Using only this mirror could cause an accident. Use the inside mirror or glance over your shoulder to properly judge distances to other objects.**

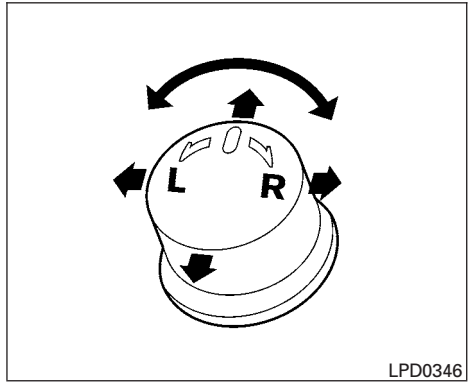

LPD0346

Electric control type

The outside mirror remote control only operates when the ignition switch is in the ACC or ON position.

Rotate the control lever to select the right or left mirror. Adjust the mirror to the desired position by moving the control lever.

Heated mirrors (if so equipped)

Some outside mirrors can be heated to defrost, defog, or de-ice for improved visibility. For additional information, see “Rear window and outside mirror defroster switch” in the “Instruments and controls” section of this manual.

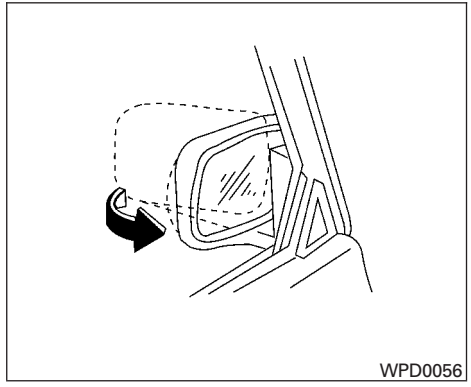
WPD0056

Manual folding outside mirrors (if so equipped)

Pull the outside mirror toward the door to fold it.

4 Monitor, climate, audio, phone and voice recognition systems

Control panel buttons — color screen with Navigation System (if so equipped) 4-2
How to use the touch screen 4-3
How to select menus on the screen 4-5
How to use the INFO button 4-5
How to use the SETTING button 4-6
☼/☽ button 4-12
RearView Monitor (if so equipped) 4-13
How to read the displayed lines 4-13
Difference between predicted and actual distances 4-14
Adjusting the screen 4-16
Operating tips 4-17
Vents 4-18
Heater and air conditioner (manual) (if so equipped) 4-19
Controls 4-19
Heater operation 4-20
Air conditioner operation 4-21
Air flow charts 4-22
Heater and air conditioner (automatic) (if so equipped) 4-26
Automatic operation 4-26
Manual operation 4-27
Operating tips 4-28
Servicing air conditioner 4-28
Audio system (if so equipped) 4-29
Radio 4-29
FM radio reception 4-29
AM radio reception 4-29
Satellite radio reception (if so equipped) 4-30
Audio operation precautions 4-30
FM/AM radio with compact disc (CD) player (if so equipped) 4-44
FM/AM/SAT radio with compact disc (CD) player (if so equipped) 4-48
FM/AM/SAT radio with CD/DVD player (if so equipped) 4-54
Digital Versatile Disc (DVD) Player Operation (models with Navigation System) 4-63
USB interface (models without Navigation System) (if so equipped) 4-66
USB interface (models with Navigation System) 4-68
iPod®* player operation without Navigation System (if so equipped) 4-72
iPod®* player operation with Navigation System (if so equipped) 4-74

Music Box® (if so equipped) 4-77
Bluetooth® streaming audio (if so equipped) 4-84
CD care and cleaning 4-87
Steering wheel switch for audio control (if so equipped) 4-88
Antenna 4-90
Car phone or CB radio 4-91
Bluetooth® Hands-Free Phone System without Navigation System (if so equipped) 4-91
Regulatory Information 4-93
Using the system 4-93
Control buttons 4-95
Getting started 4-96
List of voice commands 4-98
Speaker Adaptation (SA) mode 4-102
Manual control 4-104
Troubleshooting guide 4-105
Bluetooth® Hands-Free Phone System with Navigation System (if so equipped) 4-106
Regulatory Information 4-108
Voice commands 4-108
Connecting procedure 4-108
Vehicle phonebook 4-110
Handset phonebook 4-112
Making a call 4-113
Receiving a call 4-113
During a call 4-114
Ending a call 4-115
Phone settings 4-115
Bluetooth settings 4-116
Call volume 4-117
NISSAN Voice Recognition System (if so equipped) 4-117
NISSAN Voice Recognition Standard Mode 4-118
Using the system 4-121
Before starting 4-121
Giving voice commands 4-121
NISSAN Voice Recognition Alternate Command Mode 4-129
Using the system 4-135
Speaker Adaptation function 4-138
Troubleshooting guide 4-140

CONTROL PANEL BUTTONS — COLOR SCREEN WITH NAVIGATION SYSTEM (if so equipped)

⚠ WARNING

- **Positioning of the heating or air conditioning controls and display controls should not be done while driving in order that full attention may be given to the driving operation.**
- **Do not disassemble or modify this system. If you do, it may result in accidents, fire, or electrical shock.**
- **Do not use this system if you notice any abnormality, such as a frozen screen or lack of sound. Continued use of the system may result in accident, fire or electric shock.**
- **In case you notice any foreign object in the system hardware, spill liquid on it, or notice smoke or smell coming from it, stop using the system immediately and contact your nearest NISSAN dealer. Ignoring such conditions may lead to accidents, fire or electrical shock.**

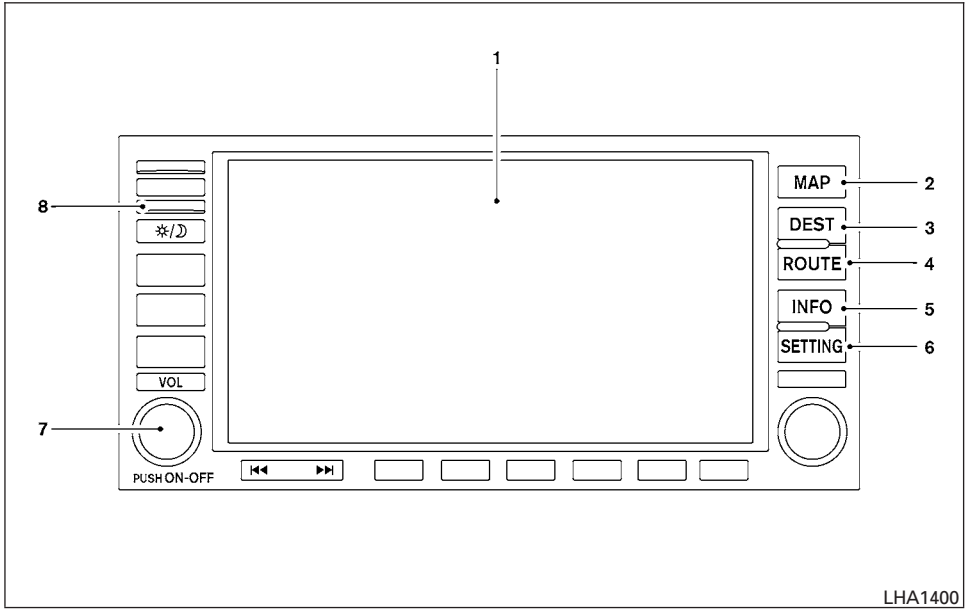

1. Display screen
2. MAP button*
3. DEST button*
4. ROUTE button*
5. INFO button (P. 4-5)
6. SETTING button (P. 4-6)
7. Volume control knob
8. ☼/☽ (brightness control) button

*For Navigation system control buttons, refer to the separate Navigation System Owner's Manual.

When you use this system, make sure the engine is running.

If you use the system with the engine not running (ignition ON or ACC) for a long time, it will discharge the battery, and the engine will not start.

Reference symbols:

"Example" — Words marked in quotes refer to a key shown only on the display. These keys can be selected by touching the screen.

HOW TO USE THE TOUCH SCREEN

⚠CAUTION

- **The glass screen on the liquid crystal display may break if it is hit with a hard or sharp object. If the glass breaks, do not touch the liquid crystalline material, which contains a small amount of mercury. Doing so could result in an injury. In case of contact with skin, wash immediately with soap and water.**
- **To clean the display, never use a rough cloth, alcohol, benzine, thinner or any kind of solvent or paper towel with a chemical cleaning agent. They will scratch or deteriorate the panel.**
- **Do not splash any liquid such as water or car fragrance on the display. Contact with liquid will cause the system to malfunction.**

To help ensure safe driving, some functions cannot be operated while driving.

The on-screen functions that are not available while driving will be "grayed out" or muted.

Park the vehicle in a safe location and then operate the navigation system.

⚠WARNING

- **ALWAYS give your full attention to driving.**
- **Avoid using vehicle features that could distract you. If distracted, you could lose control of your vehicle and cause an accident.**

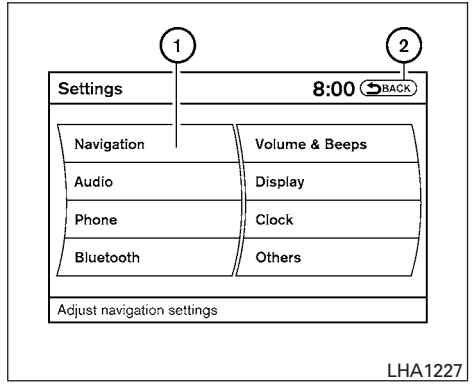

Touch screen operation

Selecting the item:

Touch an item to select. To select the "Navigation" key, touch the "Navigation" key ① on the screen. Touch the "BACK" key ② to return to the previous screen.

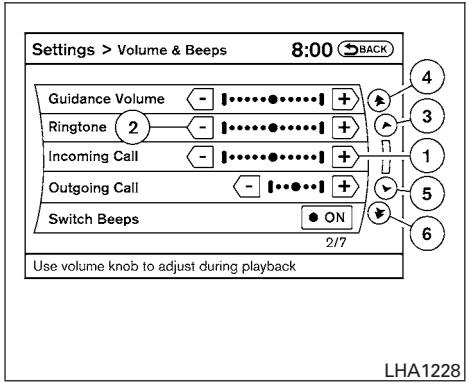

LHA1228

Adjusting the item:

Touch the "+" key ① or the "−" key ② to adjust the settings of an item.

Touch the up arrow ③ to scroll up the page one item at a time, or touch the double up arrow ④ to scroll up an entire page.

Touch the down arrow ⑤ to scroll down the page one item at a time, or touch the double down arrow ⑥ to scroll down an entire page.

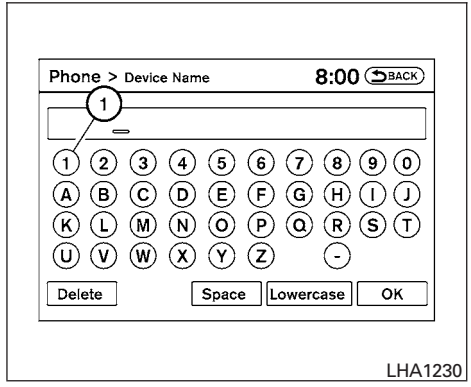

LHA1230

Inputting characters:

Touch the letter or number key ①.

There are some options available when inputting characters.

- **Uppercase:**
  Shows uppercase characters.
- **Lowercase:**
  Shows lowercase characters.
- **Space:**
  Inserts a space.
- **Delete:**
  Deletes the last inputted character with one touch. Touch and hold the "Delete" key to delete all of the characters.
- **OK:**
  Completes the character input.

Touch screen maintenance

If you clean the display screen, use a dry, soft cloth. If additional cleaning is necessary, use a small amount of neutral detergent with a soft cloth. Never spray the screen with water or detergent. Dampen the cloth first, and then wipe the screen.

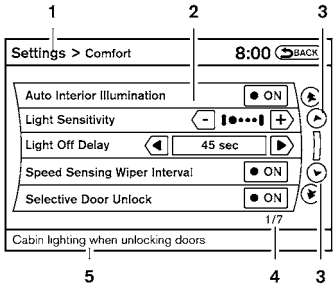

WHA1401

HOW TO SELECT MENUS ON THE SCREEN

Vehicle functions are viewed on the center display screen in menus. Whenever a menu selection is made or menu item is highlighted, different areas on the screen provide you with important information. See the following for details.

1. Header:
   Shows the path used to get to the current screen (for example, press the SETTING button > then select the “Comfort” key).
2. Menu Selections:
   Shows the options to choose within that menu screen (for example, Auto Interior Illumination, etc.).
3. Up/Down Movement Indicator:
   Shows that the arrows on the touch screen may be used to move up or down on the screen and select more options.
4. Screen Count:
   Shows the number of menu selections available for the current menu, even if they are on multiple pages (for example, 1/7).
5. Footer/Information Line:
   Provides more information (if available) about the menu selection currently highlighted (for example, Cabin lighting when unlocking doors).

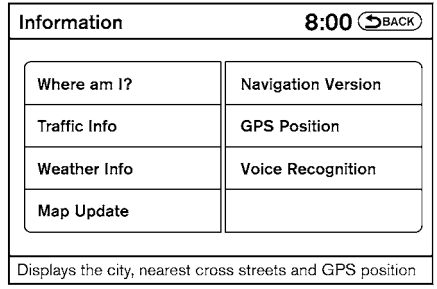

LHA1402

HOW TO USE THE INFO BUTTON

Press the INFO button; the display screen shows vehicle and navigation information for your convenience.

Where am I?

Refer to the separate Navigation System Owner’s Manual for information regarding this item.

Traffic Info

Refer to the separate Navigation System Owner’s Manual for information regarding this item.

Weather Info

Refer to the separate Navigation System Owner's Manual for information regarding this item.

Map Update

Refer to the separate Navigation System Owner's Manual for information regarding this item.

Navigation Version

Refer to the separate Navigation System Owner's Manual for information regarding this item.

GPS Position

For GPS Position, refer to the separate Navigation System Owner's Manual.

Voice Recognition settings

For Voice Recognition settings, refer to "NISSAN Voice Recognition system" in this section.

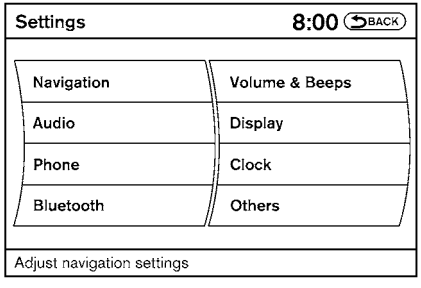

LHA1236

HOW TO USE THE SETTING BUTTON

When the SETTING button is pressed, the Settings screen will appear on the display. You can select and/or adjust several functions, features and modes that are available for your vehicle.

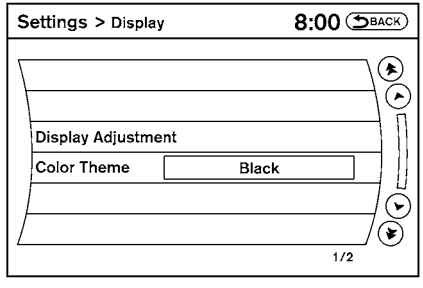

LHA1237

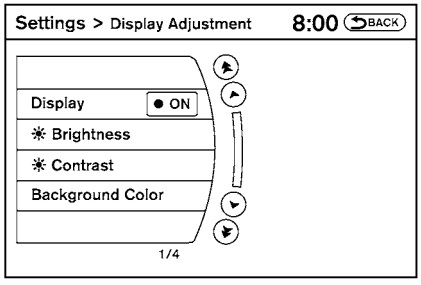

WHA1502

Display settings

Select the “Display” key. On the screen above, select the “Display Adjustment” key. The Display Adjustment screen will appear.

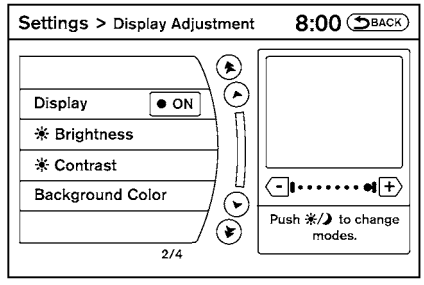

WHA1503

Brightness/contrast:

Select the “Brightness” key or the “Contrast” key to adjust the brightness or contrast of the display background. Touch the “+” or “-” key to adjust the brightness to darker or brighter and the contrast to lower or higher.

The new settings are automatically saved when you exit the setting screen by selecting the “Back” key or any other mode button.

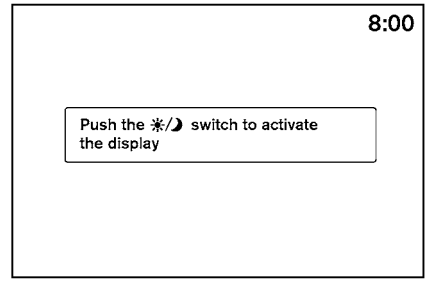

LHA1242

Display off:

Select the “Display ON” key. The indicator of the “Display ON” turns off and the message above will be displayed briefly. When the audio, HVAC (Heater and air conditioner), or any mode button on the control panel is operated, the display turns on for that operation. If one of the control panel buttons is pressed, the display will not automatically turn off until that operation is finished. Otherwise, the screen turns off automatically after 5 seconds.

To turn the screen on:

- Press the SETTING button and select the “Display” key and then select the “Display ON” key, or
- Press the ☼/☽ button and the message “resuming display” will appear and the “Display ON” key will be automatically turned on (no amber indicator).

Background color:

Select the “Background Color” key; the display color changes between day and night.

The new settings are automatically saved when you exit the setting screen by selecting the “Back” key or any other mode button.

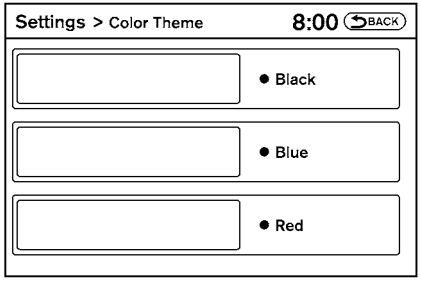

LHA1240

Color theme:

Select the “Display” key, then select the “Color Theme” key. The Color Theme select screen will appear.

Select the key for the desired color. The appearance of the background, arrows and bars will change for all screens accordingly. You can choose a black, blue or red color theme.

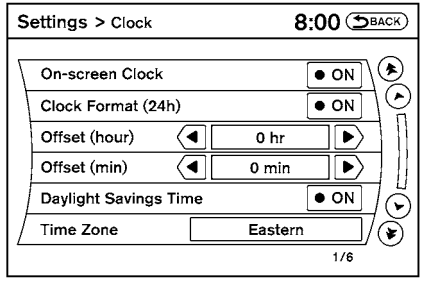

LHA1241

Clock

The following display will appear after pressing the SETTING button, then selecting the “Clock” key.

On-screen Clock:

When this item is enabled (indicator light illuminated), a clock is always displayed in the upper right corner of the screen.

This clock will indicate the time almost exactly because it is always adjusted by the GPS system.

Clock Format (24h):

When this item is enabled (indicator light illuminated), the clock format will change from the default 12-hour display to a 24-hour display.

Offset (hour):

Adjust the time by increasing or decreasing the hours.

Offset (minute):

Adjust the time by increasing or decreasing the minutes.

Daylight Savings Time:

When this item is enabled (indicator light illuminated), daylight savings time is on. To turn off the daylight savings time, touch the “ON” key; the amber indicator light will go out.

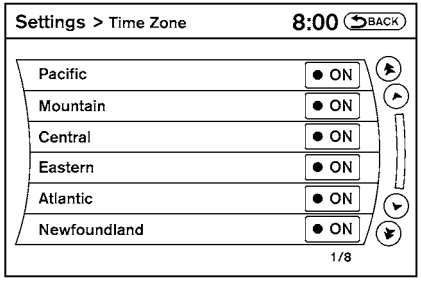

LHA1243

Time Zone:

Select the “Time Zone” key; the Time Zone screen will appear.

Select one of the following zones, depending on the current location, by selecting the correct time zone key to enable that time zone (indicator light will illuminate for that location).

- Pacific
- Mountain
- Central
- Eastern
- Atlantic
- Newfoundland
- Hawaii
- Alaska

After selection/settings, select the “Back” key or any other mode button to accept the changes.

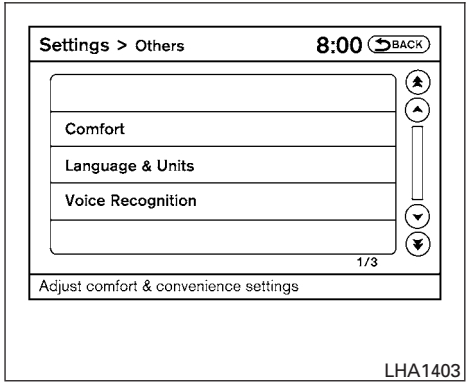

LHA1403

Others settings

Select the “Others” key. Comfort settings, language and units and Voice Recognition settings will be displayed.

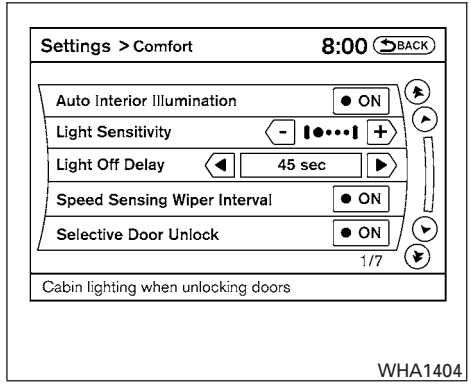

WHA1404

Comfort settings

Select the “Others” key, then select the “Comfort” key. The Comfort settings screen will be displayed.

You can set the following operating conditions by selecting the key for the desired item. The indicator light (box at the right of the selected item) alternately turns on and off each time the item is touched.

Indicator light is illuminated — ON

Indicator light is not illuminated — OFF

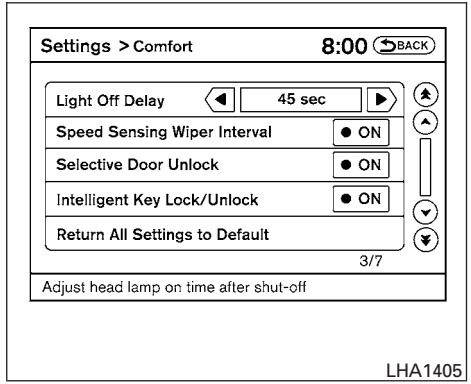

LHA1405

Auto Interior Illumination: Select to turn on or turn off the illumination of the interior lights when any door is unlocked.

Light Sensitivity: Select to adjust the sensitivity of the automatic headlights higher (right) or lower (left). After selecting the item, touch the “+” or “-” key to change the setting.

Light Off Delay: Select to change the duration of the automatic headlight off timer. After selecting the item, touch the “+” or “-” key to change the setting. The available delays are 0, 30, 45, 60, 90, 120, 150 and 180 seconds.

Speed Sensing Wiper Interval: Select to turn on or turn off the wiper interval adjusted automatically according to the vehicle speed.

Selective Door Unlock: When this item is turned on, only the driver's door is unlocked first after the door unlock operation. When the door handle request switch on the driver's or front passenger's side door is pushed to be unlocked, only the corresponding door is unlocked first. All the doors can be unlocked if the door unlock operation is performed again within one minute.

When this item is turned to off, all the doors will be unlocked after the door unlock operation is performed once.

Intelligent Key Lock / Unlock: Select to turn on or turn off the door lock/unlock function by pushing the door handle request switch.

Return All Settings to Default: Select to change all the comfort and convenience systems to their default settings.

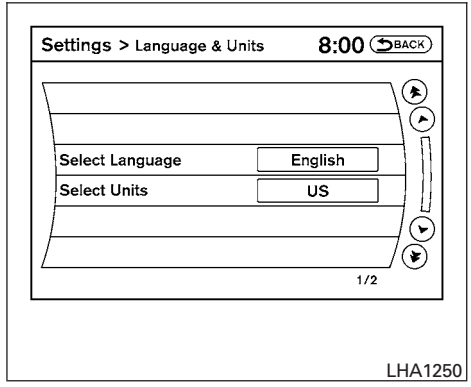

Language & Units:

Select the "Language & Units" key. Select the key of the setting you wish to change.

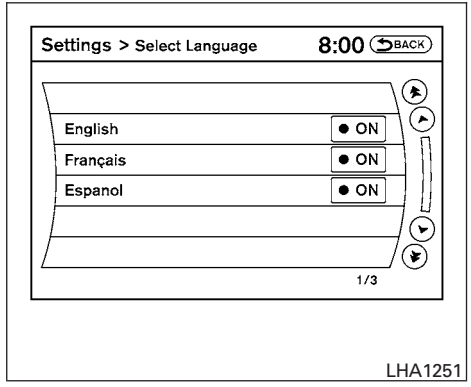

Select Language:

Select the "English" key or the "Français" key to change the language shown on the display.

If you select the "Français" key, French language will be displayed, so please use the French Owner's Manual. To obtain a French Owner's Manual, please see "Owner's Manual/Service Manual Order Information" in the "Technical and consumer information" section.

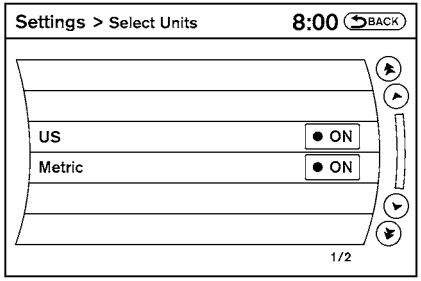

LHA1252

Select Units:

Select the “US” (mi, °F, MPG) key or the “Metric” (km, °C, L/100 km) key to change the units shown on the display.

Voice Recognition:

For Voice Recognition settings, refer to “NISSAN Voice Recognition system” in this section.

Navigation settings

Refer to the separate Navigation System Owner’s Manual for information regarding these settings.

Audio settings

For audio settings, refer to “Audio System” in this section.

Phone settings

For phone settings refer to “Bluetooth® Hands-Free Phone System with Navigation System” in this section.

Bluetooth® settings

For Bluetooth® phone settings, refer to “Bluetooth® Hands-Free Phone System with Navigation System” in this section.

For Bluetooth® audio settings, refer to “Bluetooth® streaming audio” in this section.

Volume & beeps settings

Navigation volume

For navigation volume settings, refer to the separate Navigation System Owner’s Manual for information regarding these settings.

Phone volume

For phone volume settings refer to “Bluetooth® Hands-Free Phone System with Navigation System” in this section.

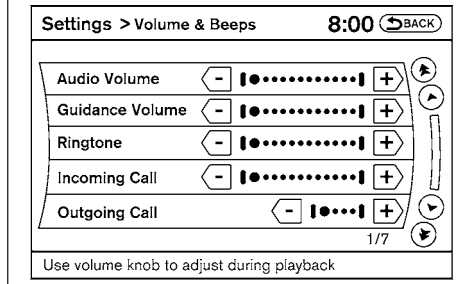

LHA1253

Switch beeps

With this option on (indicator light illuminated), a beep will sound if any control panel button is pressed.

☼/☽ BUTTON

To change the display brightness, press the ☼/☽ button. Pressing the button again will change the display to the day AUTO or the night ☽ display.

If no operation is performed within 5 seconds, the display will return to the previous display.

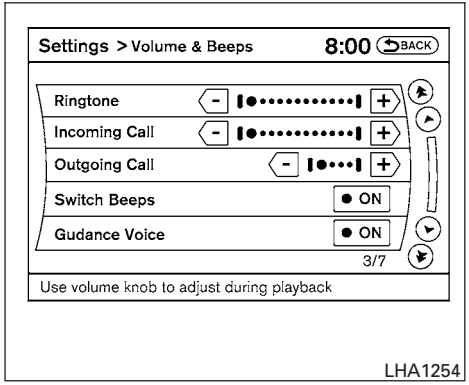

Press and hold the ☼/☽ button for more than two seconds to turn the display off. Press the button again to turn the display on.

REARVIEW MONITOR (if so equipped)

When the shift selector is shifted into the R (Reverse) position, the monitor display shows a rearward view from the vehicle.

⚠WARNING

- **The system is designed as an aid to the driver in detecting large stationary objects to help avoid damaging the vehicle. The system will not detect small objects below the bumper, and may not detect objects close to the bumper or on the ground.**
- **The RearView Monitor is a convenience but it is not a substitute for proper backing. Always turn and check that it is safe to do so before backing up. Always back up slowly.**
- **Objects viewed in the RearView Monitor differ from actual distance because a wide-angle lens is used.**
- **Make sure that the trunk is securely closed when backing up.**
- **Do not put anything on the rearview camera. The rearview camera is installed beside the license plate light.**
- **When washing the vehicle with high-pressure water, be sure not to spray it around the camera. Otherwise, water may enter the camera unit causing water condensation on the lens, a malfunction, fire or an electric shock.**
- **Do not strike the camera. It is a precision instrument. Otherwise, it may malfunction or cause damage resulting in a fire or an electric shock.**

⚠CAUTION

There is a plastic cover over the camera. Do not scratch the cover when cleaning dirt or snow from the cover.

HOW TO READ THE DISPLAYED LINES

Lines which indicate the vehicle clearance and distances to objects with reference to the bumper line Ⓐ are displayed on the monitor.

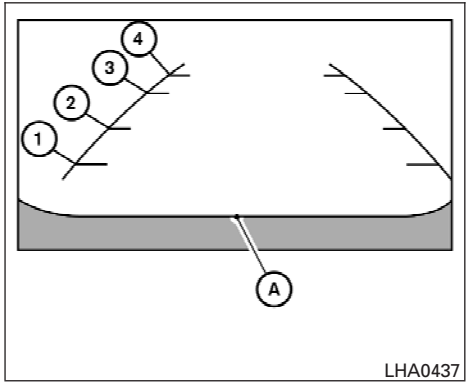

They are indicated as reference distances to objects. The lines and colors in the display indicate distances from the back bumper line Ⓐ in the illustration.

① 1.5 ft (0.5 m) red

② 3 ft (1 m) yellow

③ 7 ft (2 m) green

④ 10 ft (3 m) green

The vehicle clearance lines are wider than the actual clearance.

DIFFERENCE BETWEEN PREDICTED AND ACTUAL DISTANCES

The distance guide line and the vehicle width guide line should be used as a reference only when the vehicle is on a level, paved surface. The distance viewed on the monitor is for reference only and may be different than the actual distance between the vehicle and displayed objects.

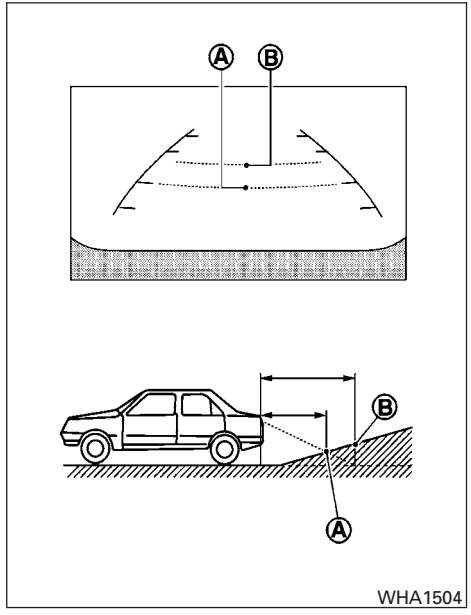

Backing up on a steep uphill

When backing up the vehicle up a hill, the distance guide lines and the vehicle width guide lines are shown closer than the actual distance. For example, the display shows 3 ft (1.0 m) to the place Ⓐ, but the actual 3 ft (1.0 m) distance on the hill is the place Ⓑ. Note that any object on the hill is further than it appears on the monitor.

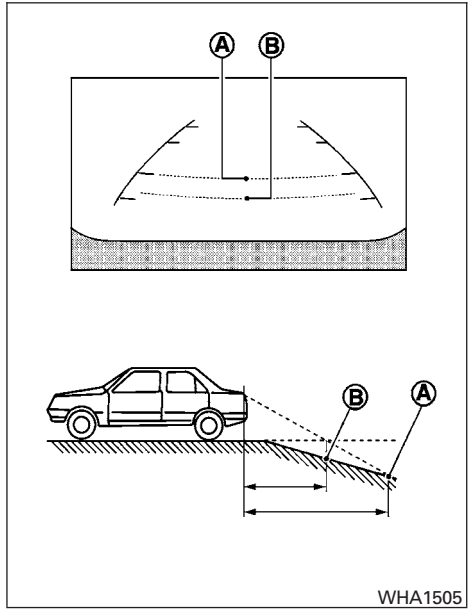

Backing up on a steep downhill

When backing up the vehicle down a hill, the distance guide lines and the vehicle width guide lines are shown farther than the actual distance. For example, the display shows 3 ft (1.0 m) to the place Ⓐ, but the actual 3 ft (1.0 m) distance on the hill is the place Ⓑ. Note that any object on the hill is closer than it appears on the monitor.

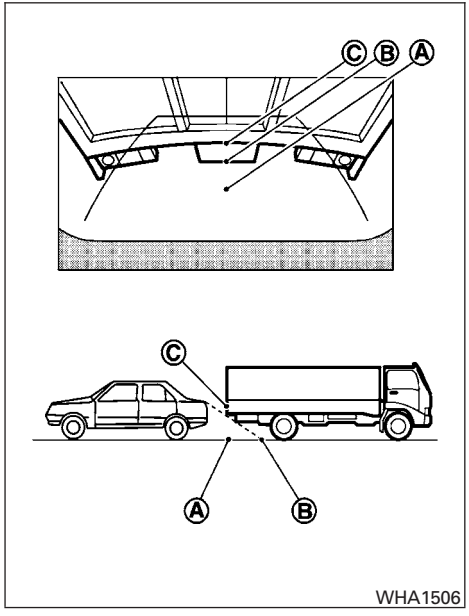

Backing up behind a projecting object

The position Ⓒ is shown farther than the position Ⓑ in the display. However, the position Ⓒ is actually at the same distance as the position Ⓐ. The vehicle may hit the object when backing up to the position Ⓐ if the object projects over the actual backing up course.

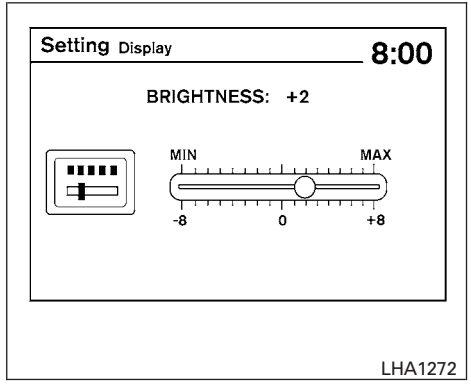

Type A

ADJUSTING THE SCREEN

The procedure for adjusting the quality of the screen differs depending on the type of screen present on the vehicle.

For vehicles without a touch screen (Type A):

- To adjust the Brightness and Contrast, press the ENTER button on the audio system repeatedly until the desired setting is displayed. Use the TUNE/SCROLL knob to adjust the display to the desired level.

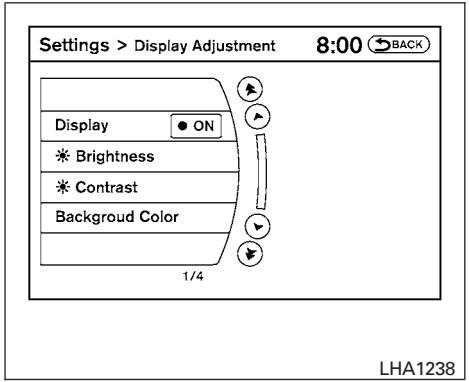

Type B

- Do not adjust the Brightness or Contrast of the RearView Monitor while the vehicle is moving.

For vehicles with a touch screen (Type B):

- To adjust the Brightness, Contrast, Display ON/OFF and Color of the RearView Monitor, press the SETTING button and then select the “Display” key with the RearView Monitor on. When the display adjustment screen appears, touch the “–” or “+” key on the desired item and adjust the level.
- Do not adjust the Brightness, Contrast, and Color of the RearView Monitor while the vehicle is moving.

OPERATING TIPS

- When the shift selector is shifted to R (Reverse), the monitor screen automatically changes to the RearView Monitor mode. However, the radio can be heard.
- It may take some time until the RearView Monitor is displayed after the shift selector has been shifted to R (Reverse). Objects may be distorted momentarily until the RearView Monitor screen is displayed completely. When the shift selector is returned to a position other than R (Reverse), it may take some time until the screen changes. Objects on the screen may be distorted until they are completely displayed.
- When the temperature is extremely high or low, the screen may not clearly display objects. This is not a malfunction.
- When strong light directly enters the camera, objects may not be displayed clearly.
- Vertical lines may be seen in objects on the screen. This is due to strong reflected light from the bumper. This is not a malfunction.
- The screen may flicker under fluorescent light. This is not a malfunction.
- The colors of objects on the RearView Monitor may differ somewhat from those of the actual object.
- When the contrast of objects is low at night, pressing the SETTING button or ENTER button may not change the brightness.
- Objects on the monitor may not be clear in a dark place or at night.
- If dirt, rain or snow attaches to the camera, the RearView Monitor may not display objects. Clean the camera.
- Do not use alcohol, benzine or thinner to clean the camera. This will cause discoloration. To clean the camera, wipe with a cloth dampened with a diluted mild cleaning agent and then wipe with a dry cloth.
- Do not damage the camera as the monitor screen may be adversely affected.
- Do not use body wax on the camera window. If body wax does get on the camera window, wipe off the wax with a clean cloth dampened with mild detergent diluted with water.

VENTS

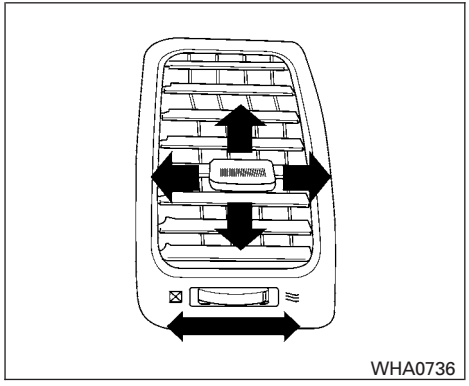

Right and Left

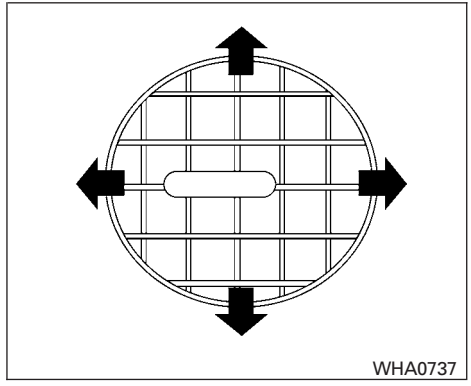

Center

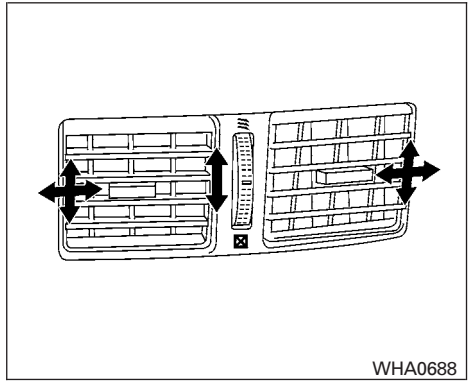

Rear (sedan, if so equipped)

Adjust air flow direction by moving the vent slides.

Open or close the vents by using the dial. Move the dial toward the ≋ to open the vents or toward the ⊠ to close them.

HEATER AND AIR CONDITIONER (manual) (if so equipped)

⚠ WARNING

- **The air conditioner cooling function operates only when the engine is running.**
- **Do not leave children or adults who would normally require the assistance of others alone in your vehicle. Pets should also not be left alone. They could accidentally injure themselves or others through inadvertent operation of the vehicle. Also, on hot, sunny days, temperatures in a closed vehicle could quickly become high enough to cause severe or possibly fatal injuries to people or animals.**
- **Do not use the recirculation mode for long periods as it may cause the interior air to become stale and the windows to fog up.**

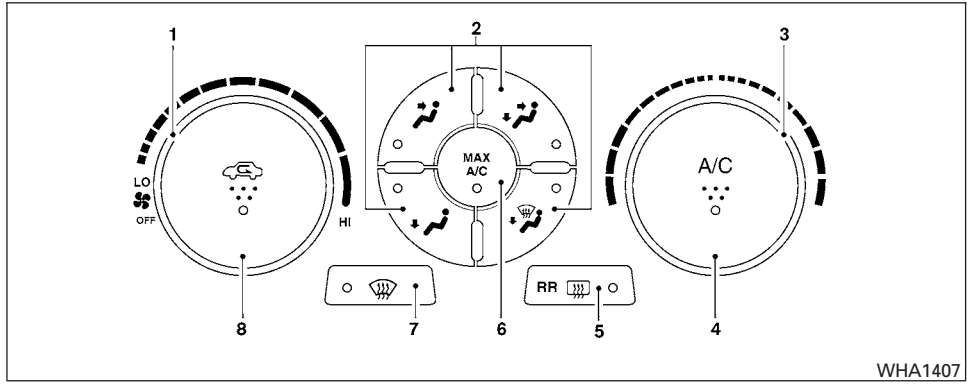

1. Fan speed control/system OFF dial
2. Air flow control buttons
3. Temperature control dial
4. Air conditioner button
5. Rear window defroster
6. MAX A/C button
7. Front windshield defrost button
8. Air recirculation button

CONTROLS

Fan control dial

The fan control dial turns the fan on and off, and controls fan speed.

Air flow control buttons

The air flow control buttons allow you to select the air flow outlets.

MAX A/C — Air flows from center and side vents with maximum cooling.

— Air flows from center and side vents.

— Air flows from center and side vents and foot outlets.
— Air flows mainly from foot outlets.
— Air flows from defroster outlets and foot outlets.
— Air flows mainly from defroster outlets.

Temperature control dial

The temperature control dial allows you to adjust the temperature of the outlet air. To lower the temperature, turn the dial to the left. To increase the temperature, turn the dial to the right.

Air recirculation button

On position (Indicator light on):
Interior air is recirculated inside the vehicle.

Press the button to the on position when:

- driving on a dusty road.
- to prevent traffic fumes from entering passenger compartment.
- for maximum cooling when using the air conditioner.

Off position (Indicator light off):
Outside air is drawn into the passenger compartment and distributed through the selected outlet.

Use the off position for normal heater or air conditioner operation.

A/C Air conditioner button

The button is provided only on vehicles equipped with an air conditioner.

Start the engine, turn the fan control dial to the desired position and push the A/C button to turn on the air conditioner. The indicator light comes on when the air conditioner is operating. To turn off the air conditioner, push the A/C button again.

The air conditioner cooling function operates only when the engine is running.

Rear window defroster switch

For more information about the rear window defroster switch, see “Rear window and outside mirror defroster switch” in the “Instruments and controls” section of this manual.

HEATER OPERATION

Heating

This mode is used to direct heated air to the foot outlets. Some air also flows from the defrost outlets and the side vent outlets.

1. Press the button to the OFF position for normal heating.
2. Press the air flow control button.
3. Turn the fan control dial to the desired position.
4. Turn the temperature control dial to the desired position between the middle and the hot position.

Ventilation

This mode directs outside air to the side and center ventilators.

1. Press the button to the OFF position.
2. Press the air flow control button.
3. Turn the fan control dial to the desired position.
4. Turn the temperature control dial to the desired position.

Defrosting or defogging

This mode directs the air to the defrost outlets to defrost/defog the windows.

1. Press the defrost/defog button .
2. Turn the fan control dial to the desired position.

3. Turn the temperature control dial to the desired position between the middle and the hot position.

- To quickly remove ice or fog from the windows, turn the fan control dial to the highest setting and the temperature control to the full HOT position.
- When the position is selected, the air conditioner automatically turns on (the indicator light on the A/C button will come on) if the outside temperature is more than 36°F (2°C). This dehumidifies the air which helps defog the windshield. The mode automatically turns off, allowing outside air to be drawn into the passenger compartment to further improve the defogging performance.

Bi-level heating

The bi-level mode directs warmed air to the side and center vents and to the front and rear floor outlets.

1. Press the button to the OFF position.
2. Press the air flow control button.
3. Turn the fan control dial to the desired position.
4. Turn the temperature control dial to the desired position.

Heating and defogging

This mode heats the interior and defogs the windshield.

1. Press the air flow control button.
2. Turn the fan control dial to the desired position.
3. Turn the temperature control dial to the desired position between the middle and the hot position.

- When the position is selected, the air conditioner automatically turns on if the outside temperature is more than 36°F (2°C). The indicator light on the A/C button will come on. This dehumidifies the air which helps defog the windshield. The mode automatically turns off, allowing outside air to be drawn into the passenger compartment to further improve the defogging performance.

Operating tips

Clear snow and ice from the wiper blades and air inlet in front of the windshield. This improves heater operation.

AIR CONDITIONER OPERATION

Start the engine, turn the fan control dial to the desired position, and push in the A/C button to activate the air conditioner. When the air conditioner is on, cooling and dehumidifying functions are added to the heater operation.

The air conditioner cooling function operates only when the engine is running.

Cooling

This mode is used to cool and dehumidify the air.

1. Press the button to the OFF position.
2. Press MAX A/C or air flow control button.
3. Turn the fan control dial to the desired position.
4. Push the A/C button. the indicator light comes on.
5. Turn the temperature control dial to the desired position.

- For quick cooling when the outside temperature is high, push the button to the ON position. Be sure to return the to the OFF position for normal cooling. MAX A/C may be used for quick cooling.

Dehumidified heating

This mode is used to heat and dehumidify the air.

1. Press the button to the OFF position.
2. Press the air flow control button.
3. Turn the fan control dial to the desired position.
4. Push the A/C button. The indicator light comes on.
5. Turn the temperature control dial to the desired position.

Dehumidified defogging

This mode is used to defog the windows and dehumidify the air.

1. Press the air flow control button.
2. Turn the fan control dial to the desired position.
3. Press the A/C button. The indicator light comes on.

When the or are selected, the air conditioner automatically turns on (the indicator light will illuminate) if the outside temperature is more than 36°F (2°C). This dehumidifies the air which helps defog the windshield. The mode automatically turns off, allowing outside air to be drawn into the passenger compartment to further improve the defogging performance.

4. Turn the temperature control dial to the desired position.

Operating tips

- Keep the windows and moonroof closed while the air conditioner is in operation.
- After parking in the sun, drive for 2 or 3 minutes with the windows open to vent hot air from the passenger compartment. Then, close the windows. This allows the air conditioner to cool the interior more quickly.
- **The air conditioning system should be operated for approximately 10 minutes at least once a month. This helps prevent damage to the system due to lack of lubrication.**
- A visible mist may be seen coming from the ventilators in hot, humid conditions as the air is cooled rapidly. This does not indicate a malfunction.
- **If the engine coolant temperature gauge indicates engine coolant temperature over the normal range, turn the air conditioner off. See "If your vehicle overheats" in the "In case of emergency" section of this manual.**

AIR FLOW CHARTS

The following charts show the button and dial positions for **MAXIMUM AND QUICK** heating, cooling or defrosting. **The air recirculation button should always be in the OFF position for heating and defrosting.**

Defrosting/ Defogging

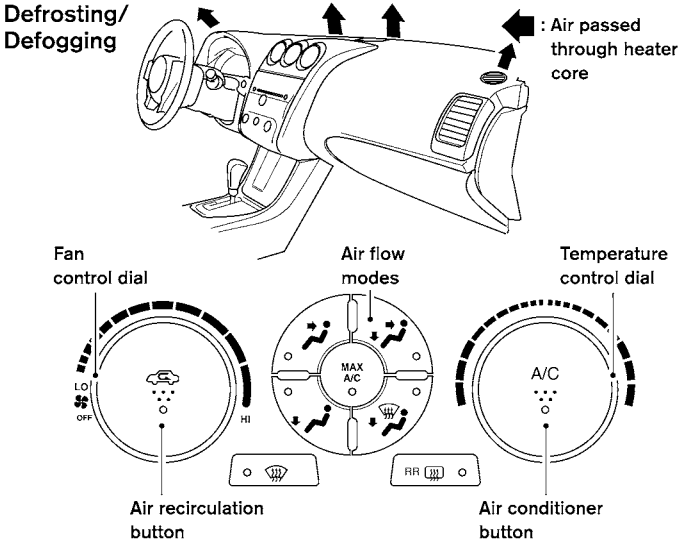

Fan control	Air recirculation button	A/C button	Temp. control	Air flow control
HI	OFF	ON	HOT (RIGHT)	

WHA1408

Bi-level Heating

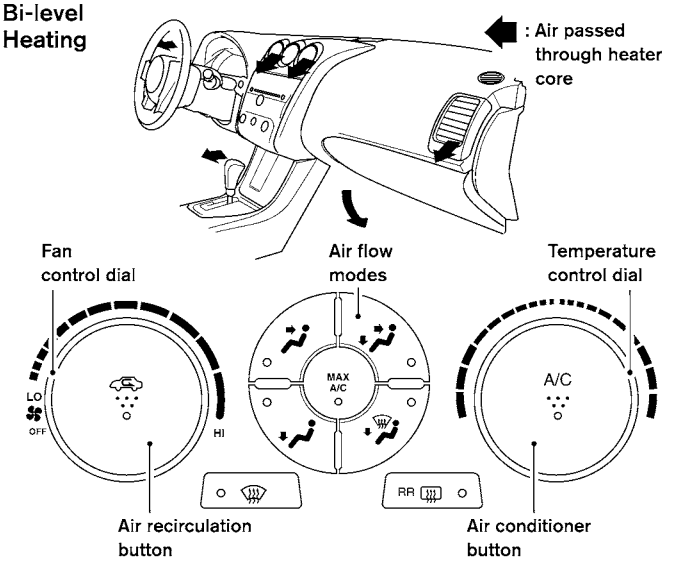

Fan control	Air recirculation button	A/C button	Temp. control	Air flow control
HI	OFF	OFF	HOT (RIGHT)	

WHA1409

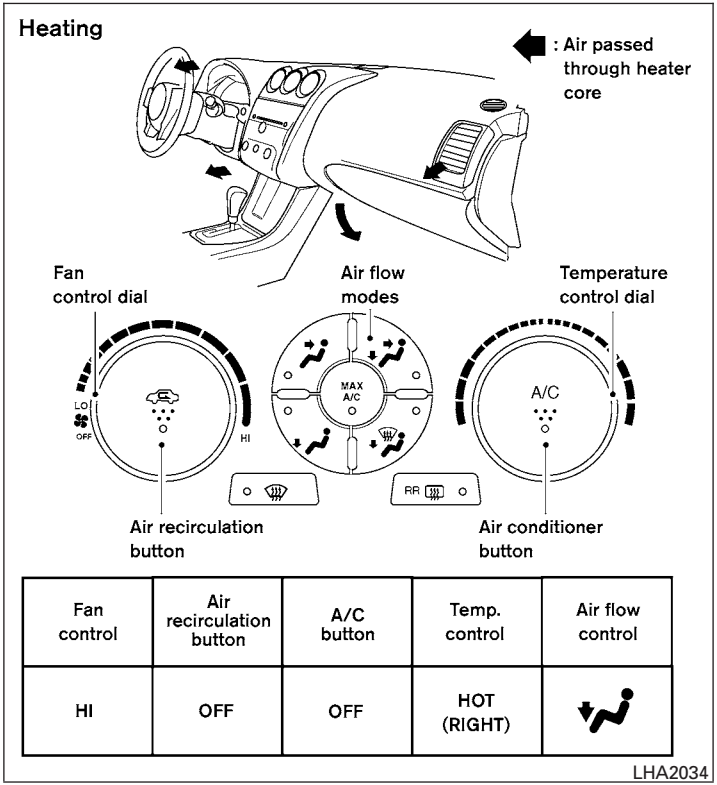

Fan control	Air recirculation button	A/C button	Temp. control	Air flow control
HI	OFF	OFF	HOT (RIGHT)	

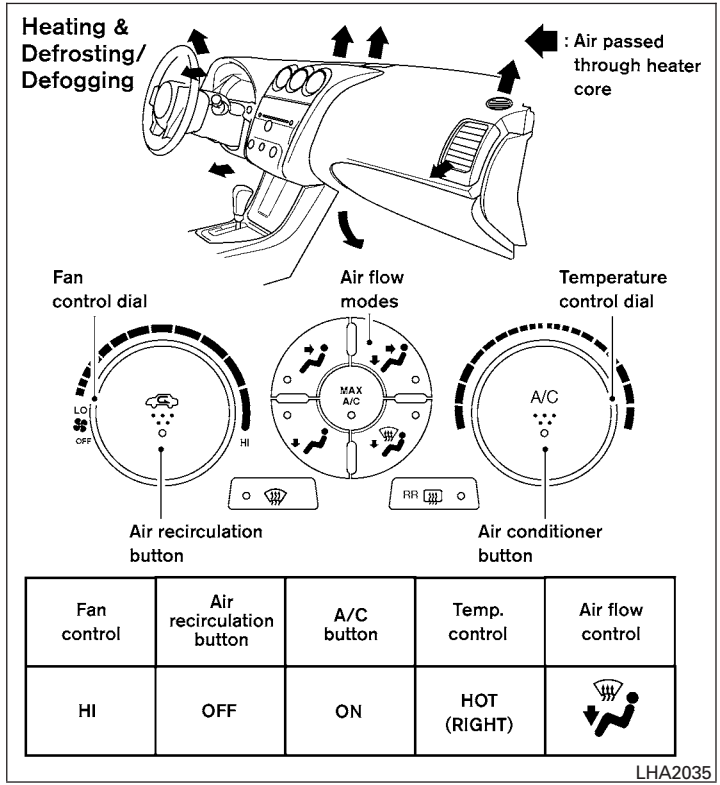

Fan control	Air recirculation button	A/C button	Temp. control	Air flow control
HI	OFF	ON	HOT (RIGHT)	

Cooling

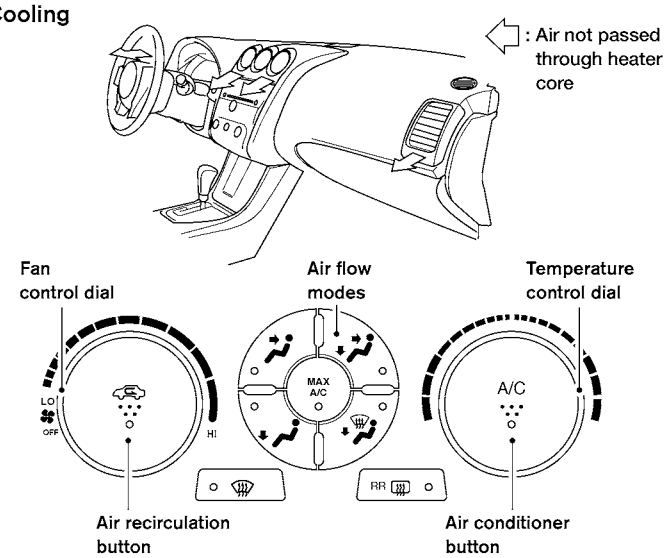

Fan control	Air recirculation button	A/C button	Temp. control	Air flow control
HI	Automatically turns ON	Automatically turns ON	COLD (LEFT)	MAX A/C

LHA2036

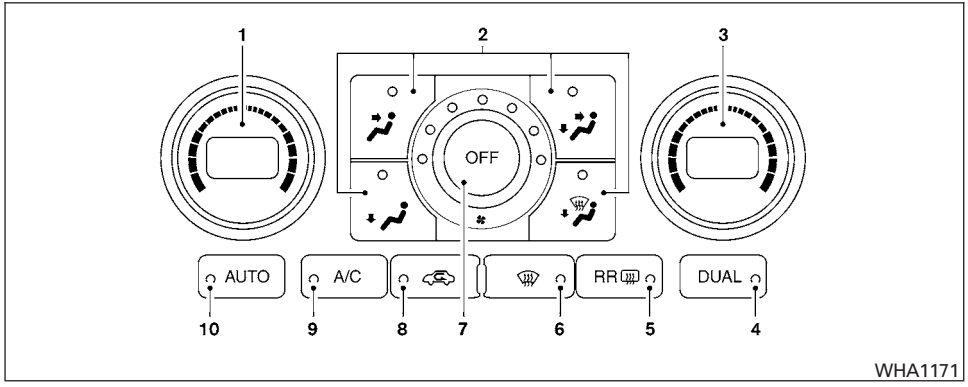

1. Driver temperature control dial
2. Air flow control buttons
3. Passenger temperature control dial
4. DUAL button
5. Rear defrost button
6. Front window defrost button
7. Fan speed dial/system OFF button
8. Air recirculation button
9. A/C ON/OFF button
10. AUTO button

⚠ WARNING

- **The air conditioner cooling function operates only when the engine is running.**
- **Do not leave children or adults who would normally require the assistance of others alone in your vehicle. Pets should also not be left alone. They could accidentally injure themselves or others through inadvertent operation of the vehicle. Also, on hot, sunny days, temperatures in a closed vehicle could quickly become high enough to cause severe or possibly fatal injuries to people or animals.**
- **Do not use the recirculation mode for long periods as it may cause the interior air to become stale and the windows to fog up.**

Start the engine and operate the controls to activate the air conditioner.

AUTOMATIC OPERATION

Cooling or heating (auto)

This mode may be normally used all year round as the system automatically works to keep a constant temperature. Air flow distribution and fan speed are also controlled automatically.

1. Press the AUTO button on.
2. Turn the driver's side temperature control dial to the left or right to set the desired temperature. Driver and passenger temperatures can be set independently. Press DUAL or turn the passenger temperature control dial to the left or right to activate dual climate control functions. Turn the passenger's side temperature control dial to the left or right to set the desired passenger's temperature.

- Adjust the temperature dial to about 75°F (24°C) for normal operation.

- The temperature of the passenger compartment will be maintained automatically. Air flow distribution, fan speed and A/C on/off are also controlled automatically.
- A visible mist may be seen coming from the vents in hot, humid conditions as the air is cooled rapidly. This does not indicate a malfunction.

Dehumidified defrosting or defogging

1. Press the defroster control button to turn the system on. The indicator light in the button will illuminate.
2. Turn the temperature dial to the left or right to set the desired temperature.

- To quickly remove ice from the outside of the windows, turn the manual fan control to HI.
- As soon as possible after the windshield is clean, press the AUTO button to return to the auto mode.
- When the control is activated, the air conditioner will automatically be turned on at outside temperatures above 36°F (2°C). This dehumidifies the air which helps defog the windshield. The air recirculation mode automatically turns off, allowing outside air to be drawn into the passenger compartment to further improve the defogging performance.

Rear window defroster switch

For more information about the rear window defroster switch, see “Rear window and outside mirror defroster switch” in the “Instruments and controls” section of this manual.

MANUAL OPERATION

Fan speed control

Turn the fan control dial left or right to manually control the fan speed.

Press the /OFF button to turn the system off.

Press the AUTO button to return to automatic control of the fan speed.

Air recirculation

Push the air recirculation button to recirculate interior air inside the vehicle. The indicator light on the switch will come on.

The air recirculation button will not be activated when the air conditioner is in DEF or mode.

Air flow control

Press the air flow control buttons to manually control air flow and select the air outlet:

- — Air flows from center and side vents.
- — Air flows from center and side vents and foot outlets.
- — Air flows mainly from foot outlets.
- — Air flows from defroster and foot outlets.
- — Air flows from defroster outlets.

To turn system off

Press the /OFF button.

OPERATING TIPS

- When the engine coolant temperature and outside air temperature are low, the air flow from the foot outlets may not operate for a maximum of 150 seconds. However, this is not a malfunction. After the coolant temperature warms up, air flow from the foot outlets will operate normally.

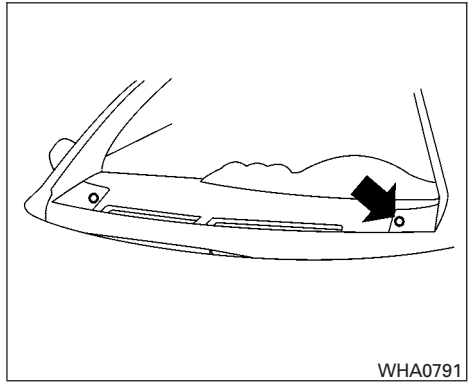

The sunload sensor, located on the top of the instrument panel on the driver's side, helps the system maintain a constant temperature. Do not put anything on or around this sensor.

The air conditioner system in your NISSAN vehicle is charged with a refrigerant designed with the environment in mind.

This refrigerant does not harm the earth's ozone layer.

Special charging equipment and lubricant is required when servicing your NISSAN air conditioner. Using improper refrigerants or lubricants will cause severe damage to your air conditioner system. See "Air conditioner system refrigerant and oil recommendations" in the "Technical and consumer information" section of this manual.

A NISSAN dealer is able to service your "environmentally friendly" air conditioning system.

⚠ WARNING

The air conditioner system contains refrigerant under high pressure. To avoid personal injury, any air conditioner service should be done only by an experienced technician with proper equipment.

RADIO

With the ignition placed in the ACC or ON position, press the PWR (power)/VOL (volume) knob to turn the radio on. If you listen to the radio with the engine not running, the ignition should be placed in the ACC position.

Radio reception is affected by station signal strength, distance from radio transmitter, buildings, bridges, mountains and other external influences. Intermittent changes in reception quality normally are caused by these external influences.

Using a cellular phone in or near the vehicle may influence radio reception quality.

Radio reception

Your NISSAN radio system is equipped with state-of-the-art electronic circuits to enhance radio reception. These circuits are designed to extend reception range, and to enhance the quality of that reception.

However, there are some general characteristics of both FM and AM radio signals that can affect radio reception quality in a moving vehicle, even when the finest equipment is used. These characteristics are completely normal in a given reception area and do not indicate any malfunction in your NISSAN radio system.

Reception conditions will constantly change because of vehicle movement. Buildings, terrain, signal distance and interference from other vehicles can work against ideal reception. Described below are some of the factors that can affect your radio reception.

Some cellular phones or other devices may cause interference or a buzzing noise to come from the audio system speakers. Storing the device in a different location may reduce or eliminate the noise.

FM RADIO RECEPTION

Range: FM range is normally limited to 25 – 30 mi (40 – 48 km), with monaural (single channel) FM having slightly more range than stereo FM. External influences may sometimes interfere with FM station reception even if the FM station is within 25 mi (40 km). The strength of the FM signal is directly related to the distance between the transmitter and receiver. FM signals follow a line-of-sight path, exhibiting many of the same characteristics as light. For example, they will reflect off objects.

Fade and drift: As your vehicle moves away from a station transmitter, the signals will tend to fade and/or drift.

Static and flutter: During signal interference from buildings, large hills or due to antenna position (usually in conjunction with increased distance from the station transmitter), static or flutter can be heard. This can be reduced by adjusting the treble control to reduce treble response.

Multipath reception: Because of the reflective characteristics of FM signals, direct and reflected signals reach the receiver at the same time. The signals may cancel each other, resulting in momentary flutter or loss of sound.

AM RADIO RECEPTION

AM signals, because of their low frequency, can bend around objects and skip along the ground. In addition, the signals can be bounced off the ionosphere and bent back to earth. Because of these characteristics, AM signals are also subject to interference as they travel from transmitter to receiver.

Fading: Occurs while the vehicle is passing through freeway underpasses or in areas with many tall buildings. It can also occur for several seconds during ionospheric turbulence even in areas where no obstacles exist.

Static: Caused by thunderstorms, electrical power lines, electric signs and even traffic lights.

SATELLITE RADIO RECEPTION (if so equipped)

When the satellite radio is used for the first time or the battery has been replaced, the satellite radio may not work properly. This is not a malfunction. Wait more than 10 minutes with satellite radio ON and the vehicle outside of any metal or large building for satellite radio to receive all of the necessary data.

No satellite radio reception is available and "NO SAT" is displayed when the SAT band option is selected unless optional satellite receiver and antenna are installed and an XM® satellite radio service subscription is active. Satellite radio is not available in Alaska, Hawaii and Guam.

Satellite radio performance may be affected if cargo carried on the roof blocks the satellite radio signal.

If possible, do not put cargo over the satellite antenna.

A build up of ice on the satellite radio antenna can affect satellite radio performance. Remove the ice to restore satellite radio reception.

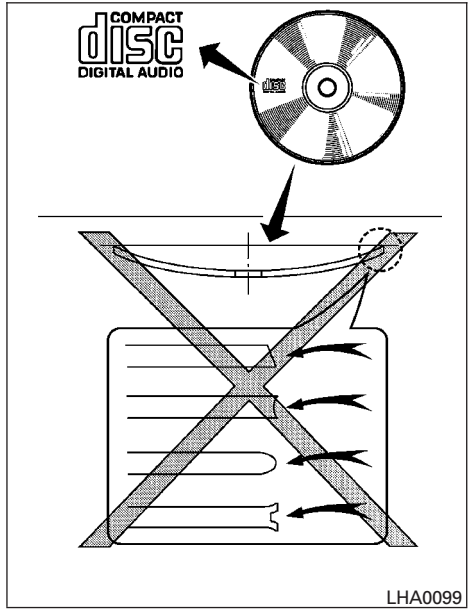

AUDIO OPERATION PRECAUTIONS

Compact disc (CD) player (models without Navigation System)

⚠ CAUTION

- **Do not force a compact disc into the CD insert slot. This could damage the CD and/or CD player.**
- **Only one CD can be loaded into the CD player at a time.**

- **Only use high quality 4.7 in (12 cm) round discs that have the "COMPACT disc DIGITAL AUDIO" logo on the disc or packaging.**
- **During cold weather or rainy days, the player may malfunction due to the humidity. If this occurs, remove the CD and dehumidify or ventilate the player completely.**
- **The player may skip while driving on rough roads.**
- **The CD player sometimes cannot function when the compartment temperature is extremely high or low. Decrease/increase the temperature before use.**
- **Do not expose the CD to direct sunlight.**

- **CDs that are in poor condition or are dirty, scratched or covered with fingerprints may not work properly.**
- **The following CDs may not work properly:**
  - **Copy control compact discs (CCCD)**
  - **Recordable compact discs (CD-R)**
  - **Rewritable compact discs (CD-RW)**
- **Do not use the following CDs as they may cause the CD player to malfunction:**
  - **3.1 in (8 cm) discs with an adapter**
  - **CDs that are not round**
  - **CDs with a paper label**
  - **CDs that are warped, scratched, or have abnormal edges**
- **This audio system can only play prerecorded CDs. It has no capability to record or burn CDs.**
- **If the CD cannot be played, one of the following messages will be displayed.**

CHECK DISC:

- **Confirm that the CD is inserted correctly (the label side is facing up, etc.).**
- **Confirm that the CD is not bent or warped and it is free of scratches.**

PRESS EJECT:

This is an error due to excessive temperature inside the player. Remove the CD by pressing the EJECT button. After a short time, reinsert the CD. The CD can be played when the temperature of the player returns to normal.

UNPLAYABLE:

The file is unplayable in this audio system (only MP3 or WMA (if so equipped) CD).

CD/DVD combination player (models with Navigation System)

- **Do not force a disc into the CD/DVD insert slot. This could damage the CD/DVD player.**
- **During cold weather or rainy days, the player may malfunction due to the humidity. If this occurs, remove the CD/DVD and dehumidify or ventilate the player completely.**
- **The player may skip while driving on rough roads.**
- **The CD/DVD player sometimes cannot function when the passenger compartment temperature is extremely high. Decrease the temperature before use.**
- **Only use high quality 4.7 in (12 cm) round discs that have the "COMPACT disc DIGITAL AUDIO" or "DVD Video" logo on the disc or packaging.**
- **Do not expose the CD/DVD to direct sunlight.**
- **CDs/DVDs that are of poor quality, dirty, scratched, covered with fingerprints, or that have pinholes may not work properly.**
- **The following CDs/DVDs are not guaranteed to play:**
  - **Copy control compact discs (CCCD)**
  - **Recordable compact discs (CD-R)**
  - **Rewritable compact discs (CD-RW)**

- Recordable compact discs (DVD±R, DVD±R DL)
- Rewritable compact discs (DVD±RW, DVD±RW DL)

- Do not use the following CDs/DVDs as they may cause the CD/DVD player to malfunction.
  - 3.1 in (8 cm) discs
  - CDs/DVDs that are not round
  - CDs/DVDs with a paper label
  - CDs/DVDs that are warped, scratched, or have abnormal edges
  - This audio system can only play prerecorded CDs/DVDs. It has no capabilities to record or burn CDs/DVDs.
- If the CD/DVD cannot be played, one of the following messages will be displayed.

  Disc Read Error:
  - Confirm that the CD/DVD is inserted correctly (the label side is facing up, etc.).
  - Confirm that the CD/DVD is not bent or warped and it is free of scratches.

  Please Eject Disc:

  This error may be due to the temperature inside the player getting too high. Remove the CD/DVD by pushing the EJECT button, and after a short time reinsert the CD/DVD. The CD/DVD can be played when the temperature of the player returns to normal. If the error persists, consult your local dealership.

  Unplayable File:
  - The file may be copy protected.
  - The file is not MP3, WMA, AAC, M4A or DIVX type.

  Region Invalid
  - The DVD is not for region 1 or all regions.
  - Use DVDs with a region code “1”, “ALL” or “1 included” for your DVD entertainment system. (The region code Ⓐ is displayed as a small symbol printed on the top of the DVD Ⓑ.) This vehicle-installed DVD player cannot play DVDs with a region code other than “1” or “ALL”.

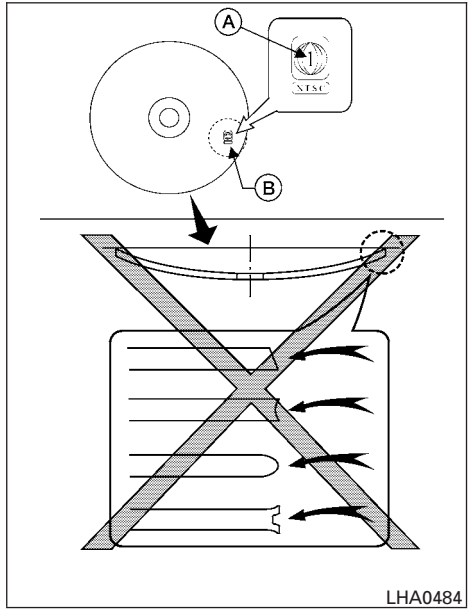

Copyright and trademark

- The technology protected by the U.S. patent and other intellectual property rights owned by Macrovision Corporation and other right holders is adopted for this system.

- **This copyright protected technology cannot be used without a permit from Macrovision Corporation. It is limited to personal use, etc., as long as the permit from Macrovision Corporation is not issued.**
- **Modifying or disassembling is prohibited.**
- **Dolby digital is manufactured under license from Dolby Laboratories, Inc.**
- **Dolby and the double D mark "DOLBY DIGITAL" are trademarks of Dolby Laboratories, Inc.**
- **DTS and DTS Digital Surround "DTS®" are registered trademarks of Digital Theater Systems, Inc.**

Universal Serial Bus (USB) memory (if so equipped)

This system supports various USB memory sticks, USB hard drives and iPod® players. There are some USB devices which may not be supported with this system.

- Make sure that the USB device is connected correctly into the USB connector.
- Do not force the memory stick or USB cable into the USB connector.
- During cold weather or rainy days, the player may malfunction due to the humidity. If this occurs, remove the USB memory stick and dehumidify or ventilate the player completely.
- The player sometimes cannot function when the passenger compartment temperature is extremely high. Decrease the temperature before use.
- Do not leave the USB memory in a place prone to static electricity or where the air conditioner blows directly. The data in the USB memory may be damaged.
- Prepare the USB device by yourself because it is not equipped with the vehicle.
- The USB device cannot be formatted with this system. If you want to format the USB memory, use your personal computer.
- Partitioned USB devices may not be played correctly.
- Some characters used in other languages (Chinese, Japanese, etc.) are not displayed properly on the vehicle center screen. NISSAN recommends using English language characters with USB devices.
- Do not connect the USB device if the connector or cable is wet. Allow the cable and/or connectors to dry completely before connecting the USB device.
- Large video podcast files cause slow responses in the iPod®. The vehicle center display may momentarily black out, but it will soon recover.
- If the iPod® automatically selects large video podcast files while in the shuffle mode, the vehicle center display may momentarily black out, but it will soon recover.
- Audiobooks may not play in the same order as they appear on the iPod®.
- The iPod® nano (1st Generation) may remain in fast forward or rewind mode if it is connected during a seek operation. In this case, please manually reset the iPod®.
- The iPod® nano (2nd Generation) will continue to fast forward or rewind if it is disconnected during a seek operation.
- An incorrect song title may appear when the Play Mode is changed while using the iPod® nano (2nd generation).

- If you are using an iPod® (3rd Generation with Dock connector), do not use very long names for the song title, album name or artist name to avoid the iPod® resetting itself.

iPod® is a trademark of Apple Inc., registered in the U.S. and other countries.

Bluetooth® streaming audio (if so equipped)

- Some Bluetooth® audio devices may not be recognized by the in-vehicle audio system.
- It is necessary to set up the wireless connection between a compatible Bluetooth® audio device and the in-vehicle Bluetooth® module before using the Bluetooth® audio.
- Operating procedure of the Bluetooth® audio will vary depending on the devices. Make sure how to operate your audio device before using it with this system.
- The Bluetooth® audio may be stopped under the following conditions:
  - Receiving a call on the Hands-Free Phone System.
  - Checking the connection to the hands-free phone.
- Do not place the Bluetooth® audio device in an area surrounded by metal or far away from the in-vehicle Bluetooth® module to prevent tone quality degradation and wireless connection disruption.
- While an audio device is connected through the Bluetooth® wireless connection, the battery power of the device may discharge quicker than usual.
- This system supports the Bluetooth® Audio Distribution Profile (A2DP, AVRCP).

Bluetooth®

BLUETOOTH® is a trademark owned by Bluetooth SIG, Inc., U.S.A. and licensed to Clarion.

Compact disc (CD) with MP3 or WMA (models without Navigation System)

Terms:

- MP3 — MP3 is short for Moving Pictures Experts Group Audio Layer 3. MP3 is the most well-known compressed digital audio file format. This format allows for near “CD quality” sound, but at a fraction of the size of normal audio files. MP3 conversion of an audio track from CD-ROM can reduce the file size by approximately a 10:1 ratio with virtually no perceptible loss in quality. MP3 compression removes the redundant and irrelevant parts of a sound signal that the human ear doesn’t hear.
- WMA — Windows Media Audio (WMA)* is a compressed audio format created by Microsoft as an alternative to MP3. The WMA codec offers greater file compression than the MP3 codec, enabling storage of more digital audio tracks in the same amount of space when compared to MP3s at the same level of quality.

- Bit rate — Bit rate denotes the number of bits per second used by a digital music file. The size and quality of a compressed digital audio file is determined by the bit rate used when encoding the file.
- Sampling frequency — Sampling frequency is the rate at which the samples of a signal are converted from analog to digital (A/D conversion) per second.
- Multisession — Multisession is one of the methods for writing data to media. Writing data once to the media is called a single session, and writing more than once is called a multisession.
- ID3/WMA Tag — The ID3/WMA tag is the part of the encoded MP3 or WMA file that contains information about the digital music file such as song title, artist, encoding bit rate, track time duration, etc. ID3 tag information is displayed on the Artist/song title line on the display.

* Windows® and Windows Media® are registered trademarks and trademarks in the United States of America and other countries of Microsoft Corporation of the USA.

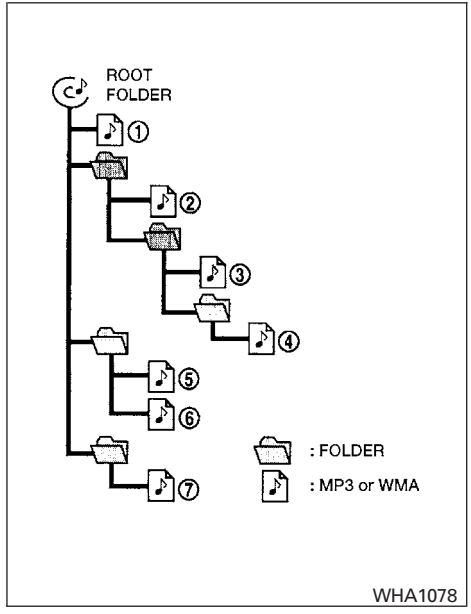

Playback order chart

Playback order:

Music playback order of a CD with MP3 or WMA files is as illustrated.

- The names of folders not containing MP3 or WMA files are not shown in the display.
- If there is a file in the top level of the disc, “Root Folder” is displayed.
- The playback order is the order in which the files were written by the writing software. Therefore, the files might not play in the desired order.

Specification chart:

Supported media			CD, CD-R, CD-RW
Supported file systems			ISO9660 LEVEL1, ISO9660 LEVEL2, Apple ISO, Romeo, Joliet * ISO9660 Level 3 (packet writing) is not supported.
Supported versions*1	MP3	Version	MPEG1, MPEG2, MPEG2.5
		Sampling frequency	8 kHz - 48 kHz
		Bit rate	8 kbps - 320 kbps, VBR
	WMA	Version	WMA7, WMA8, WMA9
		Sampling frequency	32 kHz - 48 kHz
		Bit rate	48 kbps - 192 kbps, VBR
Tag information			ID3 tag VER1.0, VER1.1, VER2.2, VER2.3 (MP3 only)
Folder levels			Folder levels: 8, Max folders: 255 (including root folder), Files: 512 (Max. 255 files for one folder)
Text character number limitation			128 characters
Displayable character codes*2			01: ASCII, 02: ISO-8859-1, 03: UNICODE (UTF-16 BOM Big Endian), 04: UNICODE (UTF-16 Non-BOM Big Endian), 05: UNICODE (UTF-8), 06: UNICODE (Non-UTF-16 BOM Little Endian)

*1 Files created with a combination of 48 kHz sampling frequency and 64 kbps bit rate cannot be played.

*2 Available codes depend on what kind of media, versions and information are going to be displayed.

Troubleshooting guide:

Symptom	Cause and Countermeasure
Cannot play	Check if the disc was inserted correctly.
	Check if the disc is scratched or dirty.
	Check if there is condensation inside the player. If there is, wait until the condensation is gone (about 1 hour) before using the player.
	If there is a temperature increase error, the CD player will play correctly after it returns to the normal temperature.
	If there is a mixture of music CD files (CD-DA data) and MP3/WMA files on a CD, only the music CD files (CD-DA data) will be played.
	Files with extensions other than “.MP3”,“.WMA”, “.mp3” or “.wma” cannot be played. In addition, the character codes and number of characters for folder names and file names should be in compliance with the specifications.
	Check if the finalization process, such as session close and disc close, is done for the disc.
	Check if the disc is protected by copyright.
Poor sound quality	Check if the disc is scratched or dirty.
	Bit rate may be too low.
It takes a relatively long time before the music starts playing.	If there are many folders or file levels on the MP3/WMA disc, or if it is a multisession disc, some time may be required before the music starts playing.
Music cuts off or skips	The writing software and hardware combination might not match, or the writing speed, writing depth, writing width, etc., might not match the specifications. Try using the slowest writing speed.
Skipping with high bit rate files	Skipping may occur with large quantities of data, such as for high bit rate data.
Moves immediately to the next song when playing	When a non-MP3/WMA file has been given an extension of “.MP3”, “.WMA”, .“mp3”or “.wma”, or when play is prohibited by copyright protection, there will be approximately 5 seconds of no sound and then the player will skip to the next song.
Songs do not play back in the desired order	The playback order is the order in which the files were written by the writing software. Therefore, the files might not play in the desired order.

CD, DVD or USB with Compressed Audio Files (models with Navigation System)

The file types supported by this system are MP3, WMA, AAC/M4A and ATRAC3.

Explanation of terms:

- MP3 — MP3 is short for Moving Pictures Experts Group Audio Layer 3. MP3 is the most well known compressed digital audio file format. This format allows for near "CD quality" sound, but at a fraction of the size of normal audio files. MP3 conversion of an audio track can reduce the file size by approximately 10:1 ratio (Sampling: 44.1 kHz, Bit rate: 128 kbps) with virtually no perceptible loss in quality. The compression reduces certain parts of sound that seem inaudible to most people.
- WMA — Windows Media Audio (WMA) is a compressed audio format created by Microsoft as an alternative to MP3. The WMA codec offers greater file compression than the MP3 codec, enabling storage of more digital audio tracks in the same amount of space when compared to MP3s at the same level of quality.
- AAC/M4A — Advanced Audio Coding (AAC) is a lossy audio compression format. Audio files that have been encoded with AAC are generally smaller in size and deliver a higher quality of sound than MP3.
- ATRAC3, ATRAC3 Plus — Adaptive Transform Acoustic Coding (ATRAC) is a lossy audio compression format developed by Sony.
- Bit rate — Bit rate denotes the number of bits per second used by a digital music file. The size and quality of a compressed digital audio file is determined by the bit rate used when encoding the file.
- Sampling frequency — Sampling frequency is the rate at which the samples of a signal are converted from analog to digital (A/D conversion) per second.
- Multisession — Multisession is one of the methods for writing data to media. Writing data once to the media is called a single session, and writing more than once is called a multisession.
- ID3/WMA Tag — The ID3/WMA tag is the part of the encoded MP3 or WMA file that contains information about the digital music file such as song title, artist, album title, encoding bit rate, track time duration, etc. ID3 tag information is displayed on the Album/Artist/Track title line on the display.

* Windows®, Windows Media® and Windows Vista® are registered trademarks or trademarks of Microsoft Corporation in the United States of America and/or other countries.

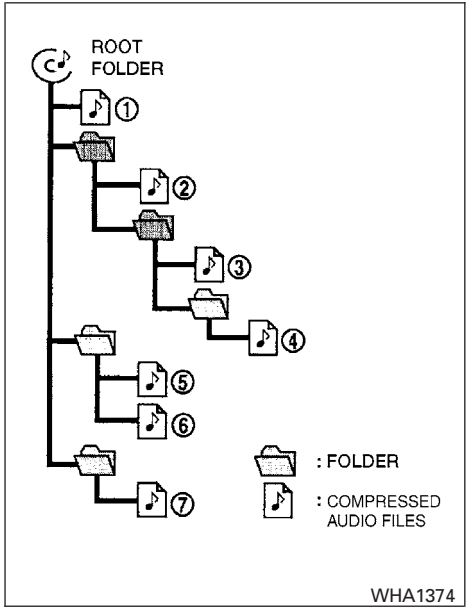

Playback order chart

Playback order:

Music playback order of a CD, DVD or USB device with compressed audio files is as illustrated.

- The folder names of folders not containing compressed audio files are not shown in the display.
- If there is a file in the top level of the disc/USB, “Root Folder” is displayed.
- The playback order is the order in which the files were written by the writing software, so the files might not play in the desired order.

Specification chart:

Supported media			CD, CD-R, CD-RW, DVD-ROM, DVD±R, DVD±RW, DVD±R DL, USB 2.0
Supported file systems			CD, CD-R, CD-RW, DVD-ROM, DVD±R, DVD±RW, DVD±R DL, ISO9660 LEVEL1, ISO9660 LEVEL2, Romeo, Joliet * ISO9660 Level 3 (packet writing) is not supported. * Files saved using the Live File System component (on a Windows Vista® operating system-based computer) are not supported.
			UDF Bridge (UDF 1.02 + ISO9660), UDF 1.5, UDF 2.0 * VDF 1.5/VDF 2.0 (packet writing) is not supported.
			USB memory: FAT16, FAT32
Supported versions*1	MP3	Version	MPEG1, MPEG2, MPEG2.5
		Sampling frequency	8 kHz - 48 kHz
		Bit rate	8 kbps - 320 kbps, VBR*4
	WMA*2	Version	WMA7, WMA8, WMA9
		Sampling frequency	32 kHz - 48 kHz
		Bit rate	32 kbps - 192 kbps, VBR*4
	AAC	Sampling frequency	8 kHz - 96 kHz
		Bit rate	16 kbps - 320 kbps, VBR*4
	ATRAC	Version	ATRAC3, ATRAC3 Plus
Tag information (Song title and artist name)			ID3 tag VER1.0, VER1.1, VER2.2, VER2.3, VER 2.4 (MP3 only)
			WMA tag (WMA only)
Folder levels			Folder levels: 8, Folders: 255 (including root folder), Files: 512 (Max. 255 files for one folder)
Text character number limitation			128 characters
Displayable character codes*3			01: ASCII, 02: ISO-8859-1, 03: UNICODE (UTF-16 BOM Big Endian), 04: UNICODE (UTF-16 Non-BOM Big Endian), 05: UNICODE (UTF-8), 06: UNICODE (Non-UTF 16 BOM Little Endian), 07: SHIFT-JIS

*1 Files created with a combination of 48 kHz sampling frequency and 64 kbps bit rate cannot be played.

*2 Protected WMA files (DRM) cannot be played.

*3 Available codes depend on what kind of media, versions and information are going to be displayed.

*4 When VBR files are played, the playback time may not be displayed correctly.

Troubleshooting guide:

Symptom	Cause and Countermeasure
Cannot play	Check if the CD/DVD/USB device was inserted correctly.
	Check if the CD/DVD is scratched or dirty.
	Check if there is condensation inside the player. If there is, wait until the condensation is gone (about 1 hour) before using the player.
	If there is a temperature increase error, the player will play correctly after it returns to the normal temperature.
	If there is a mixture of music CD files (CD-DA data) and compressed audio files on a CD, only the music CD files (CD-DA data) will be played.
	Files with extensions other than “.MP3”, “.WMA”, “.AAC”, “.M4A” or “.AA3” cannot be played. In addition, the character codes and number of characters for folder names and file names should be in compliance with the specifications.
	Check if the disc or file is generated in an irregular format. This may occur depending on the variation or the setting of the compressed audio file writing application or other text editing applications.
	Check if the finalization process, such as session close and disc close, is done for the disc.
	Check if the CD/DVD/USB device is protected by copyright.
Poor sound quality	Check if the CD/DVD is scratched or dirty.
It takes a relatively long time before the music starts playing.	If there are many folders or file levels on the CD/DVD/USB device, or if it is a multisession disc, some time may be required before the music starts playing.
Music cuts off or skips	The writing software and hardware combination might not match, or the writing speed, writing depth, writing width, etc., might not match the specifications. Try using the slowest writing speed.
Skipping with high bit rate files	Skipping may occur with large quantities of data, such as for high bit rate data.
Moves immediately to the next song when playing	If an unsupported compressed audio file has been given a supported extension like “.MP3”, or when play is prohibited by copyright protection, the player will skip to the next song.
Songs do not play back in the desired order	The playback order is the order in which the files were written by the writing software. Therefore, the files might not play in the desired order.
	Random/Shuffle may be active on the audio system or on the USB device.

Compressed Video Files (models with Navigation System)

Explanation of terms:

- DivX – DivX refers to the DivX® codec owned by Div, Inc. used for a lossy compression of video based on MPEG-4.
- AVI – AVI stands for Audio Video Interleave. It is standard file format originated by Microsoft Corporation. A .divx encoded file can be saved into the .avi file format for playback on this system if it meets the requirements stated in the table in this section. However, all .avi files are not playable on this system since different encodings can be used other than the DivX® codec.
- ASF – ASF stands for Advanced Systems Format. It is file format owned by Microsoft Corporation. Note: Only .asf files that meet the requirements stated in the table in this section can be played.
- Bit rate — Bit rate denotes the number of bits per second used by a digital video files. The size and quality of a compressed digital audio file is determined by the bit rate used when encoding the file.

Requirements for Supporting Video Playback:

Media	CD, CD-R, CD-RW, DVD, DVD±R, DVD±RW, DVD±RW DL, USB 2.0 Memory		
File Systems	CD, CD-R, CD-RW, DVD, DVD±R, DVD±RW, DVD±RW DL	ISO9660 LEVEL1, ISO9660 LEVEL2, Romeo, Joliet, UDF Bridge (UDF1.02+ISO9660), UDF1.5, UDF2.0 * ISO9660 Level 3 (packet writing) is not supported. * Files saved using the Live File System component (on a Windows Vista-based computer) are not supported. * VDF1.5/VDF2.0 (packet writing) is not supported.	
	USB Memory	FAT16, FAT32	
File Types	.divx, .avi	Video Codecs	DivX3, DivX4, DivX5, DivX6
		Audio Codecs	MP3, MPEG2.5 Audio Layer3, AC3, LPCM
	.asf	Video Codec	ISO-MPEG4
		Audio Codec	G.726
Bit Rates	.divx, .avi	Maximum Average	4 Mbps
		Maximum Peak	8 Mbps
Resolution	.divx, .avi	Minimum	32 x 32
		Maximum	720 x 480
	.asf	Minimum	32 x 32
		Maximum	720 x 576

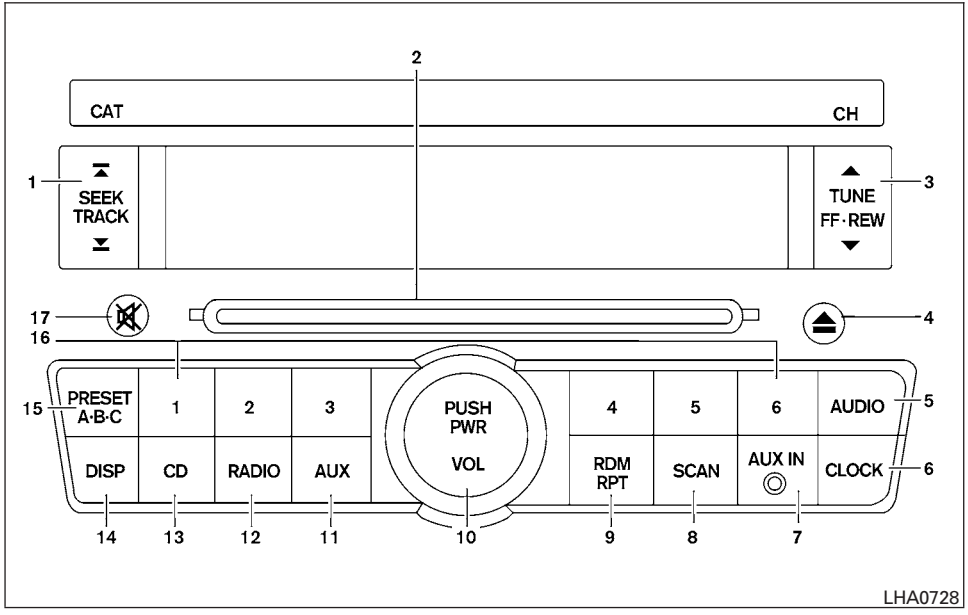

1. SEEK/TRACK button
2. CD insert slot
3. TUNE/FF·REW button
4. ⏏ CD eject button
5. AUDIO button (BASS, TREBLE, FADE and BALANCE)
6. CLOCK button
7. AUX IN jack
8. SCAN button
9. RDM/RPT button
10. PWR/VOL control knob
11. AUX button
12. RADIO button
13. CD button
14. DISP button
15. PRESET A·B·C button
16. Station select (1 - 6) buttons
17. 🔇 pause/mute button

FM/AM RADIO WITH COMPACT DISC (CD) PLAYER (if so equipped)

For all operation precautions, see “Audio operation precautions” earlier in this section.

Audio main operation

PWR/VOL control knob

Place the ignition switch in the ACC or ON position, then press the PWR/VOL control knob. If you listen to the radio with the engine not running, place the ignition in the ACC position. The mode (radio or CD) that was playing immediately before the system was turned off resumes playing.

When no CD is loaded, the radio comes on. Pressing the PWR/VOL control knob again turns the system off.

Turn the PWR/VOL control knob to the right to increase volume or to the left to decrease volume.

AUDIO button (Bass, Treble, Fade and Balance)

Press the AUDIO button to change the mode as follows:

Bass → Treble → Fade → Balance → Beep ON/OFF → Audio → Bass

To adjust Bass, Treble, Fade and Balance press the AUDIO button until the desired mode appears in the display. Press the TUNE/FF·REW ▲ or ▼ to adjust Bass and Treble to the desired level. You can also use the TUNE/FF·REW button to adjust Fade and Balance mode. Fade adjusts the sound level between the front and rear speakers and Balance adjusts the sound between the right and left speaker.

To turn the Beep sound off or on, press the AUDIO button until Beep is displayed. Press the TUNE/FF·REW button ▲ or ▼ until the desired mode is displayed. This turns on or turns off the beep sound when audio buttons are pressed.

Once you have adjusted the sound quality to the desired level, press the AUDIO button repeatedly until the radio or CD display reappears. Otherwise, the radio or CD display will automatically reappear after about 10 seconds.

DISP (display) button:

Pressing the DISP (display) button will show text about CD information in the audio display.

If the text information is to long to fully be displayed on the screen; press and hold the DISP button for longer than 1.5 seconds to scroll through the rest of the text.

CD display mode

To change the text displayed while playing a CD with text, press the DISP button. The DISP button will allow you to scroll

through CD text as follows: Track number and Track time → Album title → Song title.

- Track number displays the track number selected on the disc.
- Track time displays the amount of time the track has played.
- Album title displays the title of the CD being played.
- Song title displays the title of the selected CD track.

Clock operation

Pressing the CLOCK button displays the clock with the radio on or off. Press the CLOCK button again to turn off the clock display.

Clock set

1. Press and hold the CLOCK button for approximately 2 seconds.
2. The display will show “H-Seek M-Tune”.
3. Press the SEEK/TRACK button ▲ or ▼ to adjust the hours.
4. Press TUNE/FF·REW button ▲ or ▼ to adjust the minutes.
5. Press the CLOCK button again to exit the clock set mode.

The display will return to the regular clock display after 10 seconds, or you may press the CLOCK button again to return to the regular clock display.

pause/mute button:

To mute or pause the audio sound, press the pause/mute button. Press the button again to resume the audio sound.

FM/AM radio operation

FM/AM band select:

Pressing the RADIO button will change the band as follows:

AM ⟷ FM

When the RADIO button is pressed while the ignition switch is in the ACC or ON position, the radio will come on at the station last played.

If a compact disc is playing when the RADIO button is pressed, the compact disc will automatically be turned off and the last radio station played will come on.

The FM stereo indicator, ST, illuminates during FM stereo reception. When the stereo broadcast signal is weak, the radio automatically changes from stereo to monaural reception.

TUNE/FF·REW (tuning) button:

Press the TUNE/FF·REW button ▲ or ▼ for manual tuning. To move quickly through the channels, hold the tuning buttons down.

SEEK (tuning) button:

Press the SEEK/TRACK button ▲ or ▼ to tune from high to low or low to high frequencies and stop at the next broadcasting station.

SCAN (tuning) button:

Press the SCAN button. SCAN illuminates in the display window. Scan tuning begins from low to high frequencies. Scan tuning stops for 5 seconds at each broadcasting station that has sufficient signal strength. When scanning, SCAN blinks in the display. Pressing the SCAN button again during this 5 second period stops scan tuning and the radio remains tuned to that station.

Station memory operations:

18 stations can be set for the FM and AM radio to the A, B and C preset button in any combination of AM or FM stations.

1. Press the PRESET A·B·C button to change between storage banks. The radio displays the icon A, B or C to indicate which set of presets are active.
2. Tune to the desired station using manual TUNE or SEEK tuning. Press and hold any of the desired station memory buttons (1 – 6) until a beep sound is heard. (The radio mutes when the select button is pressed.)
3. The channel indicator will then come on and the sound will resume. Programming is now complete.
4. Other buttons can be set in the same manner.

If the battery cable is disconnected, or if the fuse opens, the radio memory will be canceled. In that case, reset the desired stations.

Compact disc (CD) player operation

Place the ignition switch in the ACC or ON position, and carefully insert the compact disc into the slot with the label side up. The compact disc is automatically pulled into the slot and starts to play.

If the radio is already operating, it automatically turns off and the compact disc begins to play.

CD button:

When the CD button is pressed with a compact disc loaded and the radio playing, the radio turns off and the last used compact disc starts to play.

TUNE/FF·REW (Fast Forward, Rewind) button:

When the TUNE/FF·REW button ▲ or ▼ is pressed while the compact disc is playing, the compact disc plays at an increased speed while fast forwarding or rewinding. When the button is released, the compact disc returns to normal play speed.

SEEK/TRACK button:

When ▲ is pressed while the compact disc is playing, the next track following the present one starts to play from the beginning. Press ▲ several times to skip several tracks. Each time the button is pressed, the CD advances 1 additional track. The track number appears in the display window. (When the last track on the compact disc is skipped, the first track is played.)

When ▼ is pressed, the track being played returns to the beginning. Press ▼ several times to skip back several tracks. Each time the button is pressed the CD moves back 1 track.

pause/mute button:

To pause the sound while a CD is playing, press the pause/mute button. “Pause” is shown on the display. Press the button again to resume playing the CD.

RDM/RPT button:

When the RDM/RPT button is pressed while the compact disc is being played, the play pattern can be changed as follows:

Random Disc ⟷ Repeat Track ⟷ Normal

Random Disc: The order of the tracks on the disc will be mixed during play.

Repeat Track: The track that is currently playing will be repeated.

SCAN (CDs) button:

Press the SCAN button less than 1.5 seconds to scan all tracks of the current disc for 10 seconds per track. The SCAN icon is flashed during scan mode.

The scan mode is canceled once it scans through all tracks on the disc, or if the SCAN button is pressed during scan mode.

CD EJECT:

When the button is pressed with a compact disc loaded, the compact disc will be ejected.

When the button is pressed while the compact disc is playing, the compact disc will eject and the system will turn off.

CD IN indicator:

A CD icon indicator appears on the display when a CD is loaded with the system on.

AUX (Auxiliary) button:

The AUX IN jack is located on the CD player. The AUX IN audio input jack accepts any standard analog audio input such as from a portable cassette tape/CD player, MP3 player or laptop computers.

Press the AUX button to play a compatible device when it is plugged into the AUX IN jack.

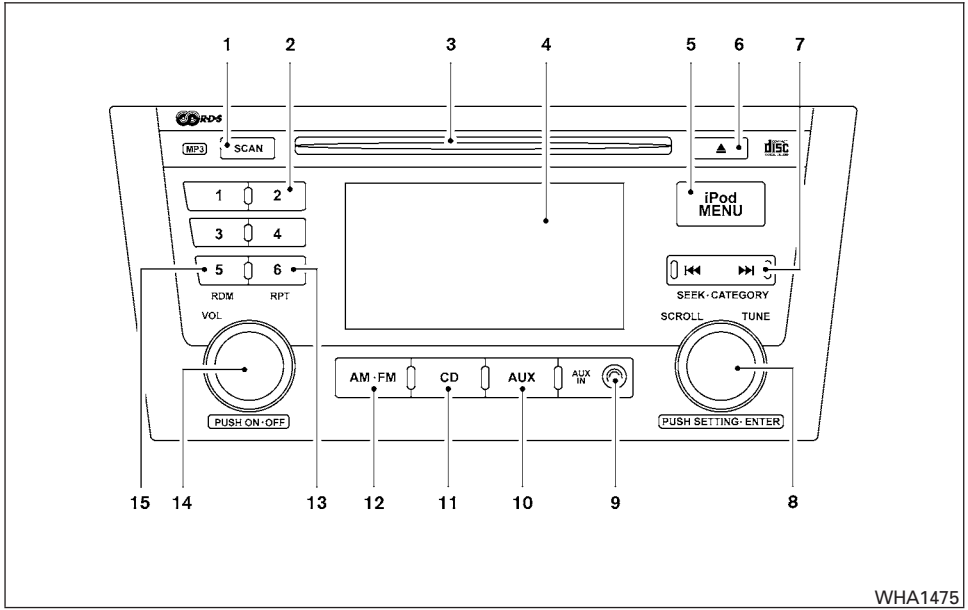

WHA1475

1. SCAN button
2. Station select (1 - 6) buttons
3. CD insert slot
4. Display screen
5. iPod MENU button
6. ⏏ CD eject button
7. SEEK/CATEGORY button
8. SETTING/ENTER button, SCROLL/TUNE knob
9. AUX IN jack
10. AUX button
11. CD button
12. AM-FM button
13. RPT button
14. VOL/ON-OFF control knob
15. RDM button

*No satellite radio reception is available when the AUX button is pressed to access satellite radio stations unless optional satellite receiver and antenna are installed and an XM® satellite radio service subscription is active. Satellite radio is not available in Alaska, Hawaii and Guam.

FM/AM/SAT RADIO WITH COMPACT DISC (CD) PLAYER (if so equipped)

For all operation precautions, see “Audio operation precautions” earlier in this section.

Audio main operation

VOL/ON·OFF control:

Place the ignition switch in the ACC or ON position and push the VOL/ON·OFF control knob while the system is off to call up the mode (radio or CD) that was playing immediately before the system was turned off.

To turn the system off, press the VOL/ON·OFF control knob.

Turn the VOL/ON·OFF control knob to adjust the volume.

This vehicle may be equipped with Speed Sensitive Volume (SSV) for audio. When this feature is active, the audio volume changes as the driving speed changes.

Setting control knob (Audio, Display and Clock):

Press the SETTING button to adjust the audio, display and clock settings as follows:

Bass → Treble → Fade → Balance → Speed Sensitive Volume (SSV) (if so equipped) → Brightness → Contrast → On-screen Clock → Clock Adjust → Bass

Once the desired setting is displayed on the screen, turn the SCROLL/TUNE knob left or right to adjust the chosen setting. Press the SETTING button to move to the next setting or wait approximately five seconds to exit the setting adjustment mode.

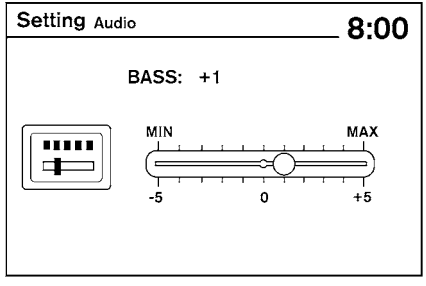

LHA1270

Audio settings:

Adjust the bass, treble, fade and balance by selecting the desired setting with the SETTING button and then adjusting the level with the SCROLL/TUNE knob. Balance adjusts the sound between the left and right speakers. Fade adjusts the sound between the front and rear speakers.

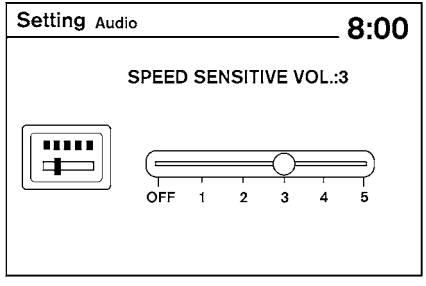

LHA1271

Speed Sensitive Volume (if so equipped):

To change the Speed Sensitive Volume (SSV) level from 1 to 5, or to turn the feature off entirely, choose the Speed Sensitive Volume (SSV) setting with the SETTING button and then adjust the level with the SCROLL/TUNE knob. Speed Sensitive Volume (SSV) adjusts the volume of the audio system as the vehicle's driving speed changes.

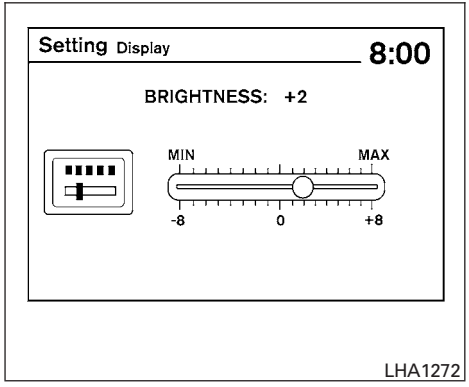

Display settings:

To adjust the brightness or contrast of the display screen, press the SETTING button until the chosen setting is displayed. Use the SCROLL/TUNE knob to adjust the display to the desired level.

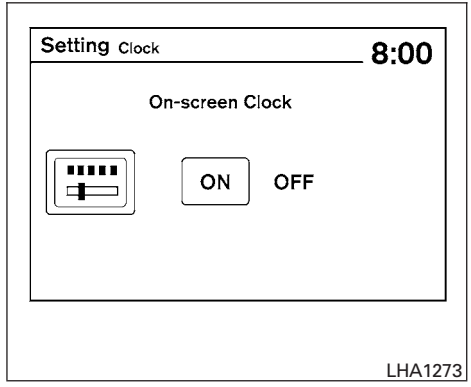

On-screen Clock:

The clock is shown in the upper right corner of the screen. To turn this feature off or to re-enable the clock display after it has been turned off, press the SETTING button until the On-screen Clock mode is displayed. Use the SCROLL/TUNE knob to toggle the feature on or off.

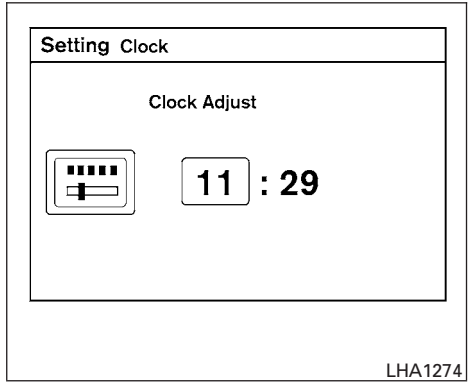

Clock adjust:

To adjust the time, perform the following steps:

1. Press the SETTING button repeatedly until the Clock Adjust mode is displayed on the screen.
2. The hours will begin blinking. Adjust the hours by turning the SCROLL/TUNE knob left or right and press the ENTER button.
3. The minutes will begin blinking. Adjust the minutes by turning the SCROLL/TUNE knob left or right and press the ENTER button.

iPod® MENU button

This button can only be used for iPod® operations. See “iPod® player operation without Navigation System” later in this section for details about the function of this button.

FM/AM/SAT radio operation

AM·FM button:

Press the AM·FM button to change the band as follows:

AM → FM1 → FM2 → AM

If another audio source is playing when the AM·FM button is pressed, the audio source playing will automatically be turned off and the last radio station played will begin playing.

The FM stereo indicator (STEREO) is shown on the screen during FM stereo reception. When the stereo broadcast signal is weak, the radio automatically changes from stereo to monaural reception.

SAT band select:

Pressing the AUX button will change the band as follows:

AUX → XM1* → XM2* → AUX (satellite, if so equipped)

When the AUX button is pressed while the ignition switch is in the ACC or ON position, the radio will come on at the station last played.

The last station played will also come on when the VOL/ON-OFF control knob is pressed to turn the radio on.

*When the AUX button is pressed, the satellite radio mode will be skipped unless an optional satellite receiver and antenna are installed and an XM® satellite radio service subscription is active. Satellite radio is not available in Alaska, Hawaii and Guam.

If a compact disc is playing when the AUX button is pressed, the compact disc will automatically be turned off and the last radio station played will come on.

SCROLL/TUNE knob (Tuning):

Turn the SCROLL/TUNE knob to the left or right for manual tuning.

SEEK tuning:

Press the SEEK/CATEGORY button ⏮ or ⏭ to tune from low to high or high to low frequencies and to stop at the next broadcasting station.

SCAN tuning:

Press the SCAN button to stop at each broadcasting station for 5 seconds. SCAN will appear on the screen while the radio is scan tuning.

Pressing the button again during this 5 second period will stop SCAN tuning and the radio will remain tuned to that station. If the SCAN button is not pressed within 5 seconds, SCAN tuning moves to the next station.

1 to 6 Station memory operations:

Twelve stations can be set for the FM band (6 for FM1, 6 for FM2) and six stations can be set for the AM band.

1. Choose the radio band AM, FM1 or FM2 using the AM·FM select button.
2. Tune to the desired station using manual, SEEK or SCAN tuning. Press and hold any of the desired station memory buttons (1 – 6) until a beep sound is heard.
3. The channel indicator will then come on and the sound will resume. Programming is now complete.
4. Other buttons can be set in the same manner.

If the battery cable is disconnected or if the fuse opens, the radio memory will be canceled. In that case, reset the desired stations.

Compact disc (CD) player operation

Place the ignition switch in the ACC or ON position and carefully insert the compact disc into the slot with the label side up. The compact disc is automatically pulled into the slot and starts to play.

If the radio is already operating, it automatically turns off and the compact disc begins to play.

CD button:

When the CD button is pressed with the system off and the compact disc loaded, the system will turn on and the compact disc will start to play.

When the CD button is pressed with a compact disc loaded and the radio playing, the radio will automatically be turned off and the compact disc will start to play.

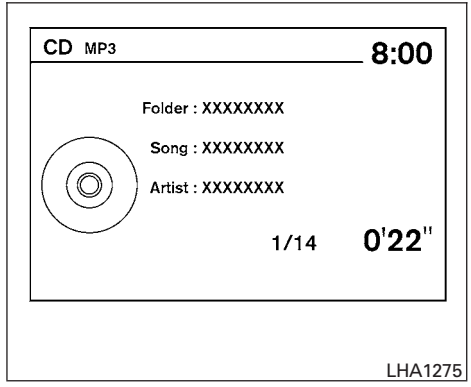

CD/MP3 display mode:

While listening to an MP3/WMA CD, certain text may be displayed on the screen if the CD has been encoded with text information. Depending on how the MP3/WMA CD is encoded, information such as Artist, Song and Folder will be displayed.

The track number and the total number of tracks in the current folder or on the current disc are displayed on the screen as well. For example, the first track out of fourteen total is currently playing.

SEEK/CATEGORY (Reverse or Fast Forward) button:

Press and hold the SEEK/CATEGORY button ⏮ or ⏭ for 1.5 seconds while the compact disc is playing to reverse or fast forward the track being played. The compact disc plays at an increased speed while reversing or fast forwarding. When the button is released, the compact disc returns to normal play speed.

SEEK/CATEGORY button:

Press the SEEK/CATEGORY button ⏮ while a CD or MP3/WMA CD is playing to return to the beginning of the current track. Press the SEEK/CATEGORY button ⏮ several times to skip backward several tracks.

Press the SEEK/CATEGORY button ⏭ while a CD or MP3/WMA CD is playing to advance one track. Press the SEEK/CATEGORY button ⏭ several times to skip forward several tracks. If the last track on a CD is skipped, the first track on the disc is played. If the last track in a folder of an MP3/WMA CD is skipped, the first track of the next folder is played.

SCROLL/TUNE knob (MP3/WMA CD only):

If an MP3/WMA CD with multiple folders is playing, turn the SCROLL/TUNE knob to change folders. Turn the knob to the left to skip back a folder. Turn the knob to the right to skip ahead a folder.

RPT button:

When the RPT button is pressed while a compact disc is playing, the play pattern can be changed as follows:

CD:

1 TRK RPT ⟷ OFF

CD with MP3 or WMA:

1 FOLDER RPT → 1 TRK RPT → OFF

1 TRK RPT: the current track will be repeated.

1 FOLDER RPT: the current folder will be repeated.

OFF: No repeat play pattern is applied. The indicator on the display will turn off.

The current play pattern of the CD is displayed on the screen unless no pattern is applied.

RDM button:

When the RDM button is pressed while a compact disc is playing, the play pattern can be changed as follows:

CD:

1 DISC RDM ⟷ OFF

CD with MP3 or WMA:

1 DISC RDM → 1 FOLDER RDM → OFF

1 DISC RDM: all tracks on the disc will be played randomly.

1 FOLDER RDM: all tracks in the current folder will be played randomly.

OFF: No random play pattern is applied. The indicator on the display will turn off.

The current play pattern of the CD is displayed on the screen unless no pattern is applied.

AUX button:

The AUX IN jack is located on the CD player. The AUX IN audio input jack accepts any standard analog audio input such as from a portable cassette tape/CD player, MP3 player or a laptop computer.

Press the AUX button to play a compatible device plugged into the AUX IN jack. The AUX button is also used to switch the audio system to a source plugged into the USB input jack in the center console. When a device is plugged into the AUX IN jack while another device is plugged into the USB input jack, the AUX button is used to toggle between the two functions.

For more information about the USB input jack, see “USB interface” in this section.

EJECT button:

When the ⏏ button is pressed with a compact disc loaded, the compact disc will eject and the last source will be played.

When the ⏏ button is pressed twice with a compact disc loaded, the compact disc will be ejected further for easier CD removal. If the disc is not removed within 20 seconds, the disc will reload.

Additional features

For more information about the USB interface available with this system, see “USB interface (models without Navigation System)” in this section.

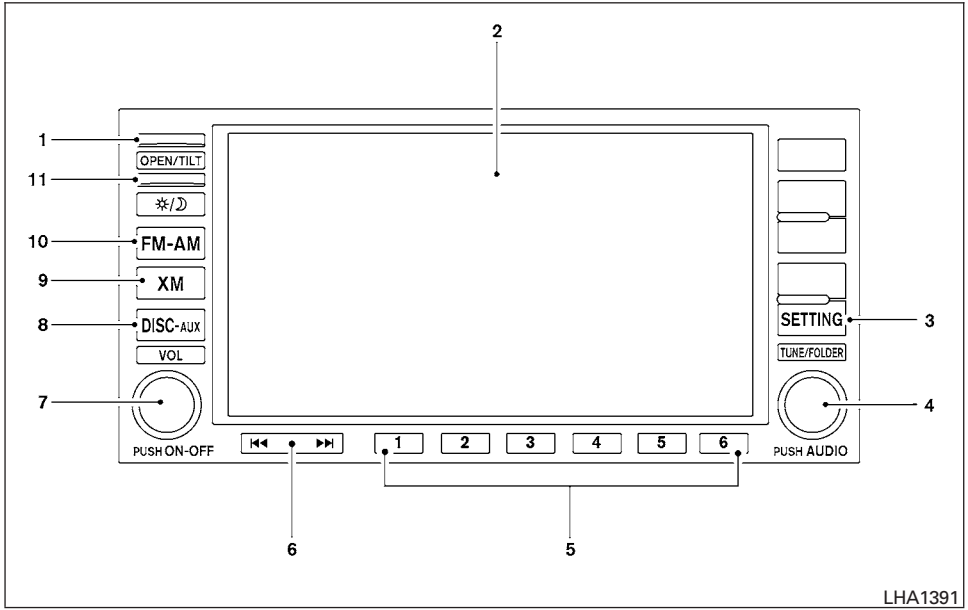

1. OPEN/TILT button (Screen tilts down to expose CD/DVD insert slot)
2. Display screen
3. SETTING button
4. AUDIO button/control knob
5. Station select (1 - 6) buttons
6. ⏮ ⏭ Seeking button
7. VOL/ON·OFF control knob
8. DISC·AUX button
9. XM button*
10. FM·AM button
11. ☼/☽ button

*No satellite radio reception is available when the XM button is pressed to access satellite radio stations unless optional satellite receiver and antenna are installed and an XM® satellite radio service subscription is active. Satellite radio is not available in Alaska, Hawaii and Guam.

FM/AM/SAT RADIO WITH CD/DVD PLAYER (if so equipped)

For all operation precautions, see "Audio operation precautions" in this section.

Audio main operation

VOL/ON·OFF control:

Place the ignition switch in the ACC or ON position and push the VOL/ON·OFF control knob while the system is off to call up the mode that was playing immediately before the system was turned off.

To turn the system off, press the VOL/ON·OFF control knob.

Turn the VOL/ON·OFF control knob to adjust the volume.

This vehicle has Speed Sensitive Volume (SSV) for audio. The audio volume changes as the driving speed changes.

AUDIO control knob (Bass, Treble, Balance and Fade):

Press the AUDIO control knob to change the mode as follows:

Bass → Treble → Balance → Fade

To adjust Bass, Treble, Balance and Fade, press the AUDIO control knob until the desired mode appears in the display. Turn the tuning knob to adjust Bass and Treble to the desired level. You can also use the tuning knob to adjust Fade and Balance modes. Fade adjusts the sound level between the front and rear speakers and Balance adjusts the sound between the right and left speakers.

Once you have adjusted the sound quality to the desired level, press the AUDIO control knob repeatedly until the radio or CD display reappears. If the control knob is not pressed for approximately 10 seconds, the radio or CD display will automatically reappear.

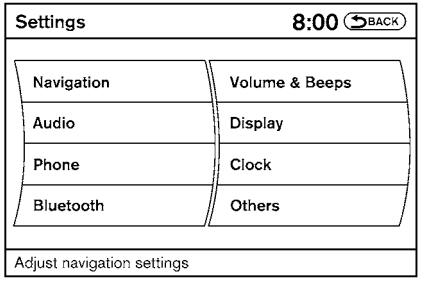

LHA1236

Speed Sensitive Volume (SSV):

To change the SSV mode from OFF to 5, press the SETTING button. Select the “Audio” key to display the audio settings screen. Select the “–” key or “+” key to change the SSV level.

While in this screen you can also adjust the other audio settings by selecting the corresponding key.

Once you have adjusted the sound quality to the desired level, select the “Back” key.

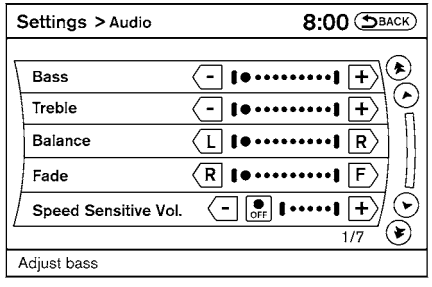

LHA1256

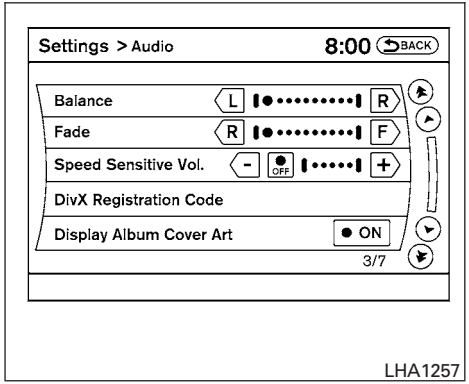

Display album cover art:

When an audio source encoded with album cover art is played, the album cover art can be displayed on the screen. To toggle this feature on or off, touch the “Display Album Cover Art” key. When the feature is activated, the amber indicator next to the word ON will illuminate.

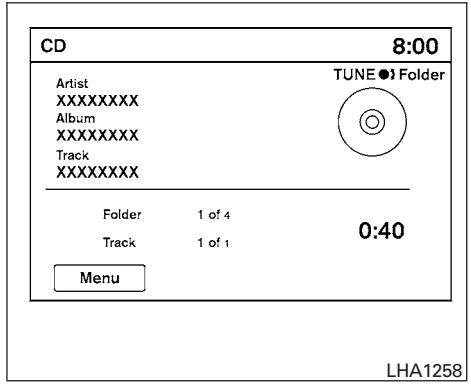

CD, DVD or USB with compressed audio files

While listening to a CD or compressed audio files, certain text might be able to be displayed (when CD encoded with text is being used).

Depending on how the CD or compressed audio files are encoded, the following text might be displayed:

- Folder displays the name of the current folder being accessed.
- File displays the name of the file currently playing.
- Song displays the ID3 encoded tag of the song name.
- Album displays the ID3 encoded tag of the album name.
- Artist displays the ID3 encoded tag of the artist’s name.

Some of this text might not display while playing a regular CD.

FM/AM/SAT radio operation

FM/AM band select:

Pressing the FM·AM button will change the band as follows:

AM → FM1 → FM2 → AM

When the FM·AM button is pressed while the ignition switch is in the ACC or ON position, the radio will come on at the station last played.

The last station played will also come on when the VOL/ON·OFF control knob is pressed ON.

If a compact disc is playing when the FM·AM button is pressed, the compact disc will automatically be turned off and the last radio station played will come on.

The FM stereo indicator STEREO will illuminate during FM stereo reception. When the stereo broadcast signal is weak, the radio will automatically change from stereo to monaural reception.

XM band select:

Press the XM button to change the band as follows:

XM1* → XM2* → XM3* → XM1 (satellite, if so equipped)

When the XM button is pressed while the ignition switch is in the ACC or ON position, the radio will come on at the station last played.

The last station played will also come on when the VOL/ON·OFF control knob is pressed ON.

*When the XM button is pressed, the satellite radio reception will not be available unless an optional satellite receiver and antenna are installed and an XM® satellite radio service subscription is active. Satellite radio is not available in Alaska, Hawaii and Guam.

If a compact disc is playing when the XM button is pressed, the compact disc will automatically be turned off and the last radio station played will come on.

TUNE/FOLDER (Tuning) knob:

To manually tune the radio, turn the TUNE/FOLDER knob to the right or left.

⏮ ⏭ Seeking button:

For AM or FM:

Press the ⏮ side of the seeking button to tune from high to low frequencies and stop at the next broadcasting station. Press the ⏭ side of the seeking button to tune from low to high frequencies and stop at the next broadcasting station.

For XM:

Press the ⏮ or ⏭ side of the seeking button to go to the first channel of the previous or next category.

1 to 6 Station memory operations:

Six stations can be set for the AM band. Twelve stations can be set for the FM band (6 for FM1, 6 for FM2). Eighteen channels can be set for the XM radio (6 for XM1, 6 for XM2, 6 for XM3 – if so equipped).

1. Choose the radio band AM, FM1 or FM2 using the FM·AM select button, or choose the satellite band XM1, XM2 or XM3 using the XM button.
2. Tune to the desired station using the ⏮ ⏭ seeking button. Press and hold any of the desired station memory buttons (1 – 6) until the preset number is updated on the display and the sound is briefly muted.
3. The channel indicator will then come on and the sound will resume. Programming is now complete.
4. Other buttons can be set in the same manner.

If the battery cable is disconnected, or if the fuse opens, the radio memory will be canceled. In that case, reset the desired stations.

List (AM and FM)

Select the “List” key to see a list of the presets in the AM, FM1 or FM2 preset banks.

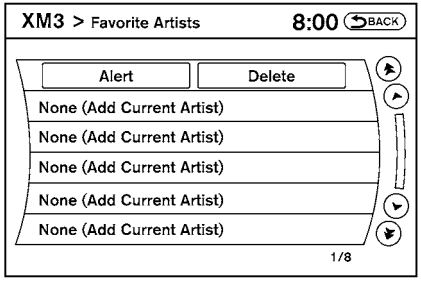

LHA1375

Menu (XM, if so equipped)

Select the “Menu” key to see a list of options:

- Preset List – Displays the list of presets. Press and hold the key on the touchscreen to save a preset.
- Customize Channel List – deselect channels to skip while using the TUNE/FOLDER knob.
- Favorite Artist & Songs
  - Tags the current artist or song playing on XM as a favorite.
  - Turn the Alert ON to indicate whenever a favorite artist or song is playing on XM. The audio system must be playing XM radio for this feature to work.
  - Delete a favorite artist or song.
- Categories – Displays a category list for XM radio. Select a category to select the first channel for that category.
- Direct Tune – Tune to a channel by entering the channel number.

Radio data system (RDS):

RDS stands for Radio Data System, and is a data information service transmitted by some radio stations on the FM band (not AM band). Currently, most RDS stations are in large cities, but many stations are now considering broadcasting RDS data.

RDS can display:

- Station call sign, such as “WHFR 98.3”.
- Station name, such as “The Groove”.
- Music or programming type such as “Classical”, “Country”, or “Rock”.
- Station specific text.

If the station broadcasts RDS information, the text information is automatically displayed.

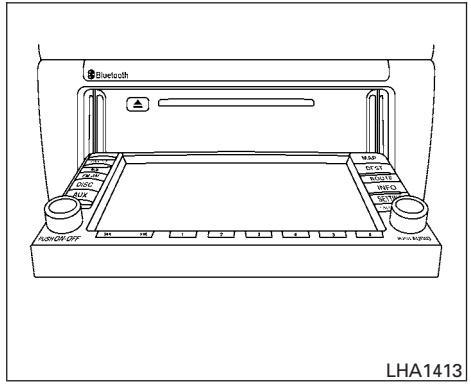

LHA1413

Compact disc (CD) player operation

Place the ignition switch in the ACC or ON position. The CD/DVD insert slot is located behind the display screen. To insert a CD, press the OPEN/TILT button on the audio unit. The display screen will automatically move down to expose the CD/DVD insert slot. Insert the CD into the slot with the label side facing up. The CD will be guided automatically into the slot and begin playing. To return the display screen to its upright position after the CD is inserted, press the OPEN/TILT button again.

If the radio is already operating, it will automatically turn off and the compact disc will play.

If the system has been turned off while the compact disc was playing, pressing the VOL/ON·OFF control knob will start the compact disc.

DISC·AUX button:

When the DISC·AUX button is pressed with the system off and the compact disc loaded, the system will turn on and the compact disc will start to play.

When the DISC·AUX button is pressed with the compact disc loaded but the radio playing, the radio will automatically be turned off and the compact disc will start to play.

Seeking button:

When the ⏮ side of the seeking button is pressed while a compact disc is playing, the track being played returns to its beginning. Press several times to skip back through tracks. The compact disc will go back the number of times the button is pressed.

When the ⏭ side of the seeking button is pressed while the compact disc is playing, the next track will start to play from its beginning. Press several times to skip through tracks. The compact disc will advance the number of times the button is pressed. (When the last track on the compact disc is skipped through, the first track will be played.)

Seeking (Rewind and Fast Forward) button:

Press and hold the ⏮ side of the seeking button or the ⏭ side of the seeking button while a compact disc is playing; the compact disc will play while rewinding or fast forwarding. When the button is released, the compact disc will return to normal play speed.

TUNE/FOLDER knob

While playing a CD with compressed audio files, turn the TUNE/FOLDER knob right or left to play the next or previous folder.

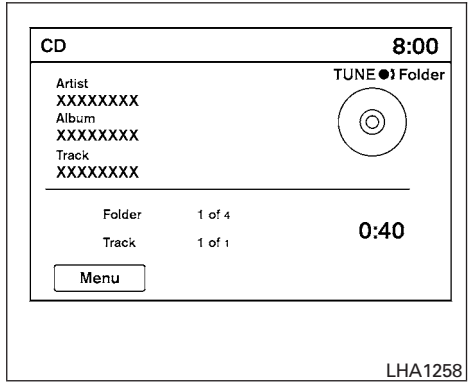

CD menu

Touch the “Menu” key on the display while a CD or CD with compressed audio files is playing to bring up a list of options. Depending on the type of CD being played, the following options may be available:

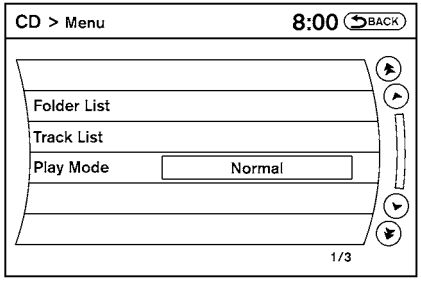

LHA1259

- Play Mode

This option allows you to alter the play pattern of the CD. Touch the key of the mode you wish to apply. The modes change the play pattern as follows:

1 Track Repeat - the current track is repeated.

1 Disc Random- tracks from the entire disc are played randomly.

1 Folder Repeat (compressed audio files CD only) - the current folder is repeated.

1 Folder Random (compressed audio files CD only) - tracks from the current folder are played randomly.

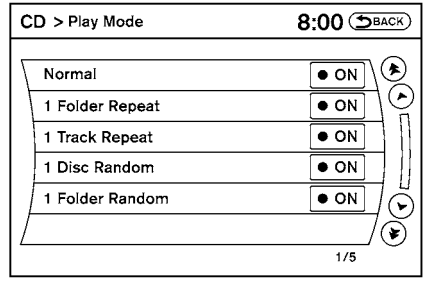

LHA1262

Normal - Plays all tracks on the CD in sequential order until stopped.

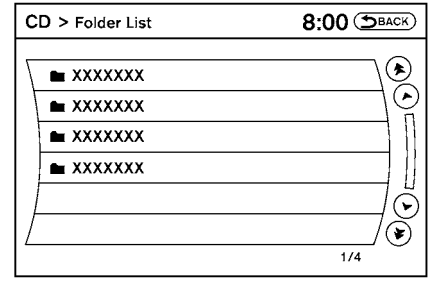

LHA1260

- Folder List

The folders on the disc are displayed. Select the key of a folder name to begin playing tracks from that folder.

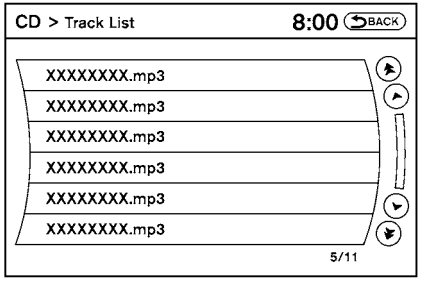

LHA1261

- Track List

The tracks on the disc are displayed. Select the key of a track name to begin playing that track.

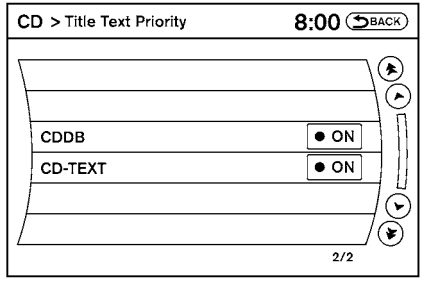

LHA1267

- Title Text Priority
- Record to Music Box, Automatic Recording, Recording Quality

For more information about these options, see “Music Box®” in this section.

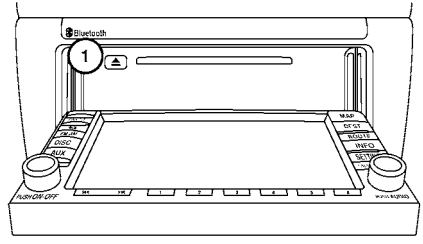

LHA1415

CD EJECT button:

To eject a CD, press the OPEN/TILT button to lower the display screen. Once the screen is in the lowered position, press the ⏏ button to the left of the CD/DVD insert slot ①. The CD will be ejected.

When the ⏏ button is pressed while the CD is being played, the CD will eject and the system will turn off.

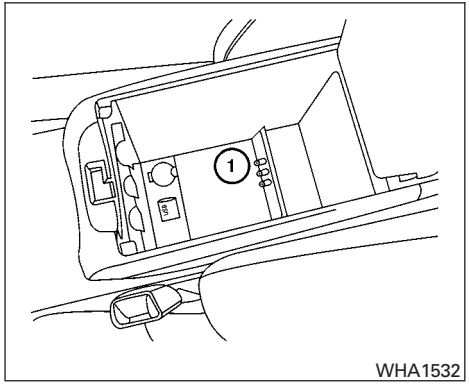

AUX (auxiliary) input jacks

The auxiliary input jacks are located inside the center console ①. NTSC compatible devices such as video games, camcorders and portable video players can be connected to the auxiliary input jacks. Audio devices, such as some MP3 players, can also be connected to the system through the auxiliary input jacks.

The auxiliary input jacks are color coded for identification purposes:

- Red – right channel audio input
- White – left channel audio input
- Yellow – video input

Before connecting a device to the auxiliary input jacks, turn off the power of the portable device.

With a compatible device connected to the auxiliary input jacks, press the DISC·AUX button repeatedly until the AUX mode appears in the display. The output from the device will be played through the display (when the vehicle is in the (P) Park position and the parking brake engaged) and audio system.

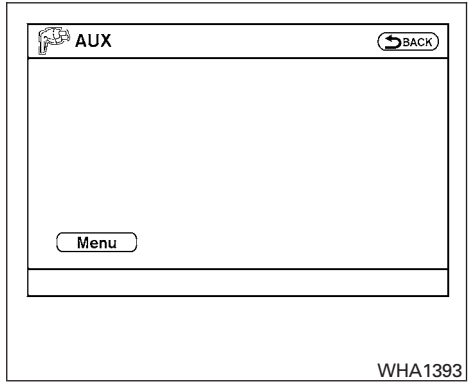

AUX settings

Select the “Settings” key.

The display mode can be set to Normal, Wide or Cinema. The volume setting can be set to Low, Medium or High.

Additional features

For more information about the iPod® player available with this system, see “iPod® player operation with Navigation System” in this section.

For more information about the USB interface available with this system, see “USB interface (models with Navigation System)” in this section.

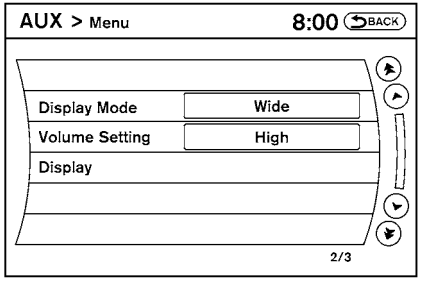

LHA1394

For more information about the Music Box® feature available with this system, see “Music Box®” in this section.

For more information about the Bluetooth® streaming audio feature available with this system, see “Bluetooth® streaming audio” in this section.

DIGITAL VERSATILE DISC (DVD) PLAYER OPERATION (models with Navigation System)

Precautions

Start the engine when using the DVD entertainment system.

Movies will not be shown on the front display while the vehicle is in any drive position to reduce driver distraction. Audio is available when a movie is played. To view movies on the front display, stop the vehicle in a safe location, move the shift selector to the P (Park) position and apply the parking brake.

WARNING

- **The driver must not attempt to operate the DVD system or wear the headphones while the vehicle is in motion so that full attention may be given to vehicle operation.**
- **Do not attempt to modify the system to display a movie on the front screen while the vehicle is being driven. Doing so may distract the driver and may cause a collision and serious personal injury or death.**

CAUTION

- **Only operate the DVD while the vehicle engine is running. Operating the DVD for extended periods of time with the engine OFF can discharge the vehicle battery.**
- **Do not allow the system to get wet. Excessive moisture such as spilled liquids may cause the system to malfunction.**
- **While playing VIDEO-CD media, this DVD player does not guarantee complete functionality of all VIDEO-CD formats.**

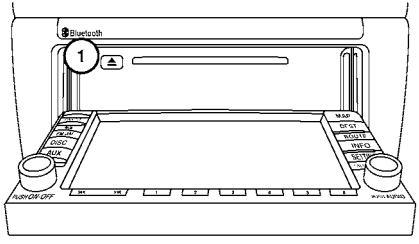

LHA1415

Playing a DVD

Inserting/Ejecting the DVD

The CD/DVD insert slot is located behind the display screen. To insert the DVD, press the OPEN/TILT button on the audio unit. The display screen will automatically move down to expose the CD/DVD insert slot. Insert the DVD into the slot with the label side facing up. The DVD will be guided automatically into the slot and begin playing. To return the display screen to its upright position after the DVD is inserted, press the OPEN/TILT button again.

To eject a DVD, press the OPEN/TILT button to lower the display screen. Once the screen is in the lowered position, press the ⏏ button to the left of the CD/DVD insert slot ①. The DVD will be ejected.

DISC-AUX button

Park the vehicle in a safe location for the front seat occupants to operate the DVD drive while watching the images.

Press the DISC-AUX button until the DVD mode is active on the display.

When a DVD is loaded, it will be replayed automatically.

The operation screen will be turned on when the DISC-AUX button is pressed while a DVD is playing. The operation screen will turn off automatically after a period of time. To turn it on again, press the DISC-AUX button.

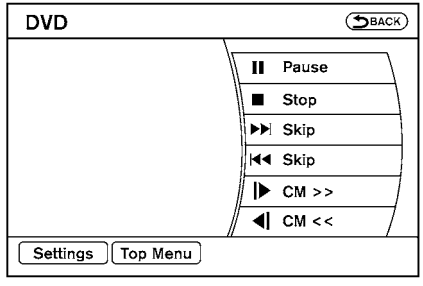

LHA1376

DVD operation keys

When the DVD is playing without the operation screen being shown, you may use the touchscreen to select items from the displayed video. When the operation screen is being shown, use the touchscreen to select an item from the displayed menus.

II PAUSE:

Select the II key to pause the DVD. To resume playing the DVD, use the ▶ key.

PLAY:

Select the ▶ key to start playing the DVD or resume playing the DVD after it has been paused.

STOP:

Select the ■ key to stop playing the DVD.

NEXT/PREVIOUS CHAPTER:

Select the ▶▶| key to skip the chapter(s) of the disc forward. Select the |◀◀ key to skip the chapter(s) of the disc backward. The chapters will advance forward or backward the number of times the respective key is touched.

CM SKIP:

This function is only for DVD-VIDEO and DVD-VR. Select the |▶ or ◀| key to fast forward or rewind a set interval of time based on the CM settings. For more information, see "DVD settings" in this section.

Next/Prev:
This function is only for DVD-AUDIO. Select the "+" or "-" key to advance or rewind the still image. The still image will advance or rewind the number of times the key is touched.

Top Menu:

When the "Top Menu" key is selected while the DVD is playing, the top menu specific to each disc will be displayed. For details, see the instructions attached to the disc.

DVD settings

Select the "Settings" key to adjust the following settings:

- **Key** (DVD-VIDEO, DVD-AUDIO)
  Displays the operation keys for the specific DVD menu.
  - Select the directional keys to move the cursor on the DVD menu.
  - Select the "Enter" key to fix the selected menu item.
  - Select the "Move" key to move the location of the operation keys on the screen.
  - Select the "Back" key to return to the previous menu screen.
  - Select the "Hide" key to hide the operation keys.
- **Title Menu** (DVD-VIDEO)
  Some menus specific to each disc will be shown. For details, see the instructions attached to the disc.
- **Title Search** (DVD-VIDEO, DVD-VR)
  The scene with the specified title will be displayed the number of times the "+" or "-" side is selected.
- **Group Search** (DVD-AUDIO, VIDEO CD)
  The scene with the specified group will be displayed the number of times the "+" or "-" side is selected.
- **10 Key Search** (DVD-VIDEO, VIDEO CD, CD-DA, DVD-VR)
  Select the "10 Key Search" key to open the number entry screen. Input the number you want to search for and select the "OK" key. The specified Title/Chapter or Group/Track will be played.
- **Select No.** (VIDEO CD)
  Select the "Select No." key to open the number entry screen. Input the number you want to search for and select the "OK" key. The specified scene will be played.
- **Angle** (DVD-VIDEO)
  If the DVD contains different angles (such as moving images), the current image angle can be switched to another one. Select the "Angle" key and use the "+" or "-" key to change the angle.

- **Angle Mark** (DVD-VIDEO)
  When this item is turned on, an angle mark will be shown on the bottom of the screen if the scene can be seen from a different angle.
- **Menu Skip** (DVD-VIDEO)
  DVD menus are automatically configured and the contents will be played directly when the “Menu Skip” key is turned on. Note that some discs may not be played directly even if this item is turned on.
- **CM Skip** (DVD-VIDEO)
  Select the “CM Skip” key to choose the setting time for CM backward and forward operations. Use the “+” or “-” key to choose a setting time of 15, 30 or 60 seconds.
- **DRC** (DVD-VIDEO, DVD-VR)
  DRC (Dynamic Range Compression) automatically adjusts the soundtrack volume level to maintain a more even sound to the speakers.
- **DVD Language** (DVD-VIDEO, VIDEO CD)
  Select the “DVD Language” key to open the number entry screen. Input the number corresponding to the preferred language and select the “OK” key. The DVD top menu language will be changed to the one specified.
- **Display**
  Adjust the image quality of the screen by selecting the preferred adjustment items.
- **Audio**
  Choose the preferred language for the audio.
- **Subtitle** (DVD-VIDEO, DVD-VR)
  Choose the preferred language for the subtitles.
- **Display Mode** (DVD-VIDEO, VIDEO CD, DVD-VR)
  Choose from the “Full”, “Wide”, “Normal” or “Cinema” mode.
- **Title List** (DVD-VR)
  Choose the preferred title from the list.
- **Play Mode**
  Choose the preferred play mode.
- **PG/PL Mode** (DVD-VR)
  Choose from the “PG” or “PL” mode.

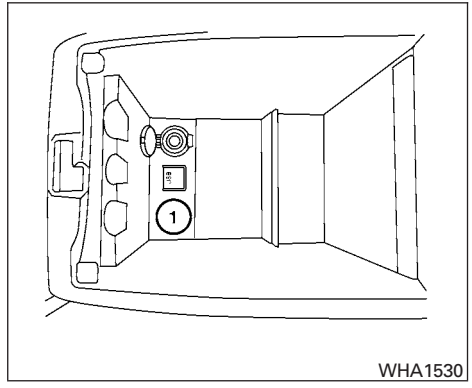

WHA1530

USB INTERFACE (models without Navigation System) (if so equipped)

Connecting a device to the USB input jack

The USB input jack is located in the center console. Open the protective cover ① on the USB jack, then insert the USB device into the jack.

When a compatible storage device is plugged into the jack, compatible audio files on the storage device can be played through the vehicle’s audio system.

Audio file operation

AUX button:

Place the ignition switch in the ON or ACC position and press the AUX button to switch to the USB input mode. If another audio source is plugged in through the AUX IN jack on the radio, the AUX button toggles between the two sources.

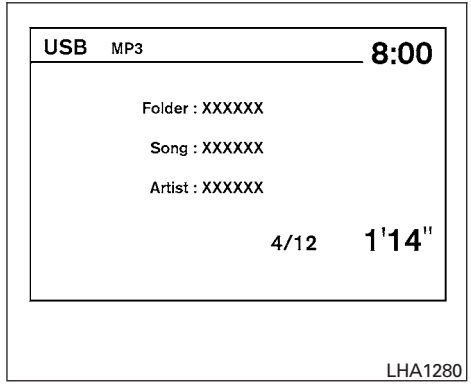

Play information

Information about the audio files being played can be displayed on the display screen of the vehicle's audio system. Depending on how the audio files are encoded, information such as Folder, Song and Artist will be displayed.

The track number and number of total tracks in the folder are displayed on the screen as well. For example, the fourth track out of twelve total is currently playing.

SEEK/CAT (Reverse or Fast Forward) buttons:

Press and hold the SEEK/CAT buttons ⏮ or ⏭ for 1.5 seconds while an audio file on the USB device is playing to reverse or fast forward the track being played. The track plays at an increased speed while reversing or fast forwarding. When the button is released, the audio file returns to normal play speed.

SEEK/CAT buttons:

Press the SEEK/CAT button ⏮ while an audio file on the USB device is playing to return to the beginning of the current track. Press the SEEK/CAT button ⏮ several times to skip backward several tracks.

Press the SEEK/CAT button ⏭ while an audio file on the USB device is playing to advance one track. Press the SEEK/CAT button ⏭ several times to skip forward several tracks. If the last track in a folder on the USB device is skipped, the first track of the next folder is played.

RDM button:

When the RDM button is pressed while an audio file on the USB device is playing, the play pattern can be changed as follows:

ALL RDM → 1 FOLDER RDM → OFF

ALL RDM: all tracks on the USB device will be played randomly.

1 FOLDER RDM: all tracks in the current folder will be played randomly.

OFF: No random play pattern is applied. The indicator on the display will turn off.

The current play pattern of the USB device is displayed on the screen unless no pattern is applied.

RPT button:

When the RPT button is pressed while an audio file on the USB device is playing, the play pattern can be changed as follows:

1 FOLDER RPT → 1 TRACK RPT → OFF

1 TRACK RPT: the current track will be repeated.

1 FOLDER RPT: the current folder will be repeated.

OFF: No repeat play pattern is applied. The indicator on the display will turn off.

The current play pattern of the USB device is displayed on the screen unless no pattern is applied.

TUNE/SCROLL knob:

If there are multiple folders with audio files on the USB device, turn the TUNE/SCROLL knob to change folders. Turn the knob to the left to skip back a folder. Turn the knob to the right to skip ahead a folder. If there is only one folder of audio files on the USB device, turning the TUNE/SCROLL knob in either direction will return to the first track on the USB device.

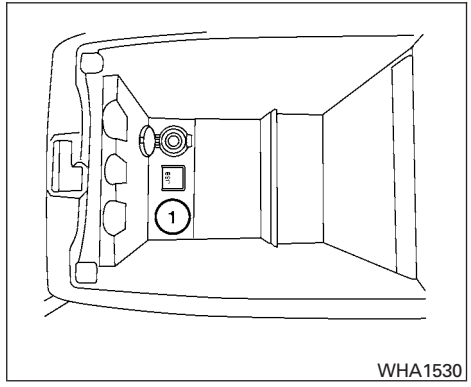

WHA1530

USB INTERFACE (models with Navigation System)

Connecting a device to the USB input jack

The USB input jack is located in the center console. Open the protective cover ① on the USB jack, then insert the USB device into the jack.

When a compatible storage device is plugged into the jack, compatible audio and video files on the storage device can be played through the vehicle's audio system and center display screen.

When there are both audio and movie files in the USB memory, the mode select screen is displayed. Use the touchscreen to select the preferred type of file. When there is only type of file in the USB memory, that audio or movie operation screen is displayed and starts to play.

When you play a file with limited playing time, the confirmation screen will be displayed before starting to play the file. Confirm the playing time and select “yes” to start playing.

Audio file operation

DISC-AUX button:

Place the ignition switch in the ON or ACC position and press the DISC-AUX button to switch to the USB input mode. If another audio source is playing and a USB memory device is inserted, press the DISC-AUX button repeatedly until the center display changes to the USB memory mode.

If the system has been turned off while the USB memory was playing, push the ON-OFF/VOL control knob to restart the USB memory.

Seeking (Reverse or Fast Forward) button:

Press and hold the ⏮ side of the seeking button for 1.5 seconds while an audio file on the USB device is playing to reverse the track being played. Press and hold the ⏭ side of the seeking button for 1.5 seconds while an audio file on the USB device is playing to fast forward the track being played. The track plays at an increased speed while reversing or fast forwarding. When the button is released, the audio file returns to normal play speed.

Seeking button:

Press the ⏮ side of the seeking button while an audio file on the USB device is playing to return to the beginning of the current track. Press the ⏮ side of the seeking button several times to skip backward several tracks.

Press the ⏭ side of the seeking button while an audio file on the USB device is playing to advance one track. Press the ⏭ side of the seeking button several times to skip forward several tracks. If the last track in a folder on the USB device is skipped, the first track of the next folder is played.

Folder selection:

To change to another folder in the USB memory, turn the TUNE/FOLDER knob or choose a folder displayed on the screen using the touchscreen.

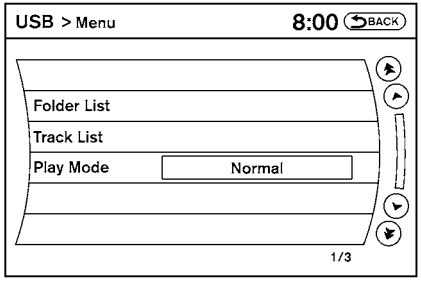

LHA1294

Menu:

There are some options available during playback. Select one of the following that are displayed on the screen, if necessary. Refer to the following information for each item.

- Movie Playback
  Switch to the movie playback mode. This item is displayed only when the USB memory contains movie files.
  The shift selector must be in Park (P) with the parking brake engaged to watch movies from a USB device.
- Folder List/Track List
  Displays the folder or track list. The “Movie Playback” key is also displayed in this list screen and enables you to switch to the movie playback mode.
- Play Mode
  Choose the preferred play mode using the touchscreen.

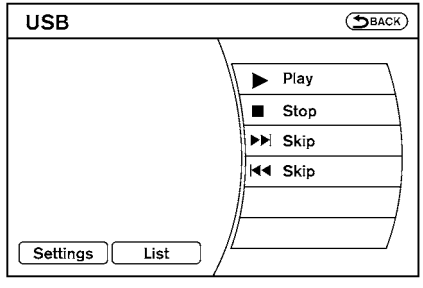

LHA1379

Movie file operation

Park the vehicle in a safe location for the front seat occupants to operate the USB memory while watching the images.

DISC-AUX button:

When the DISC-AUX button is pushed with the system off and the USB memory inserted, the system will turn on. If another audio source is playing and the USB memory is inserted, press the DISC-AUX button repeatedly until the center display changes to the USB memory mode.

Operation keys:

To operate the USB memory, select the desired key displayed on the display screen.

- ⏸ Pause:

  Select the ⏸ key to pause the movie file. To resume playing the movie file, use the ▶ key.

- ▶ Play:

  Select the ▶ key to start playing the movie file or resume the movie file if it has been paused.

- ■ Stop:

  Select the ■ key to stop playing the movie file.

- ▶▶| Next Chapter/Fast Forward:

  Select the ▶▶| key to skip the chapter(s) of the disc forward. The chapters will advance the number of times the key is selected. Press and hold the key to fast forward the chapter.

- |◀◀ Previous Chapter/Rewind:

  Select the |◀◀ key to skip the chapter(s) of the disc backward. The chapters will go back the number of times the key is selected. Press and hold the key to rewind the chapter.

List:

Select the “List” key on the movie file operation screen to display the file list.

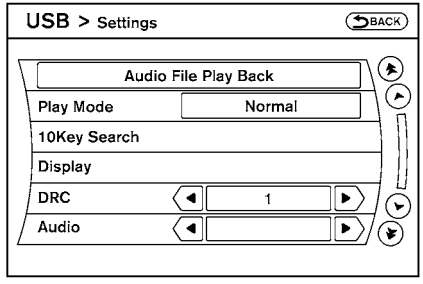

LHA1380

Settings:

Select the “Settings” key to adjust the following settings:

- **Audio File Playback**
  Switch to the audio playback mode. This item is displayed only when the USB memory contains audio files.

- **Play Mode**
  Choose between the “Normal” or “1 Track Repeat” play modes.

- **10 Key Search**
  Select the “10 Key Search” key to open the number entry screen. Input the number you want to search for and the specified file or folder will be played.
- **Display**
  Adjust the image quality of the screen.
- **DRC**
  DRC (Dynamic Range Compression) automatically adjusts the soundtrack volume level to maintain a more even sound to the speakers.
- **Audio**
  Choose the preferred language of the audio.
- **Subtitle**
  Choose the preferred language of the subtitles.
- **Display Mode**
  Choose between the “Normal”, “Wide”, “Cinema” or “Full” display modes.

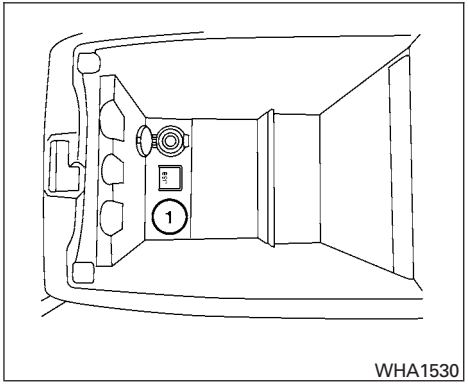

WHA1530

iPod®* PLAYER OPERATION WITHOUT NAVIGATION SYSTEM (if so equipped)

Connecting iPod®

To connect an iPod® to the vehicle so that the iPod® can be controlled with the audio system controls and display screen, use the USB jack located in the center console. Open the protective cover ① on the USB jack in the center console. Then connect the iPod®-specific end of the cable to the iPod® and the USB end of the cable to the USB jack on the vehicle. If your iPod® supports charging via a USB connection, its battery will be charged while connected to the vehicle with the ignition switch in the ACC or ON position.

While connected to the vehicle, the iPod® can only be operated by the vehicle audio controls.

To disconnect the iPod® from the vehicle, remove the USB end of the cable from the USB jack on the vehicle, then remove the cable from the iPod®.

* iPod® is a trademark of Apple Inc., registered in the U.S. and other countries.

Compatibility

The following models are compatible:

- iPod® 5th Generation version 1.2.3
- iPod® Classic - version 1.1
- iPod® Touch - version 2.1*
- iPod® Nano - 1st generation version 1.3.1
- iPod® Nano - 2nd generation version 1.1.3
- iPod® Nano - 3rd generation version 1.0.2
- iPod® Nano - 4th generation version 1.0.4
- iPod® Nano - 5th generation version 1.0.1

* Some features of this iPod® may not be fully functional.

Make sure that your iPod® firmware is updated to the version indicated above.

Audio main operation

AUX button:

Place the ignition switch in the ACC or ON position and press the AUX button repeatedly until the iPod® mode is displayed on the screen.

If another audio source is playing and the iPod® is connected, press the AUX button repeatedly to switch to the iPod® mode.

If the vehicle audio system is turned off while the iPod® is playing, the iPod® will start when the VOL/ON-OFF control knob is pressed.

Interface:

The interface for iPod® operation shown on the vehicle's audio system display screen is similar to the iPod® interface. Use the TUNE/SCROLL knob and ENTER button to navigate the menus on the screen. The iPod® MENU button on the vehicle audio system is used to move up one level in the iPod® menus.

Depending on the iPod® model, the following items may be available on the menu list screen. For further information about each item, see the iPod® Owner's Manual.

- Playlists
- Artists
- Albums
- Songs
- Podcasts
- Genres
- Composers
- Audiobooks
- ShuffleSongs

⏮ ⏭ SEEK/CAT buttons:

Press the SEEK/CAT buttons ⏮ or ⏭ to skip backward or forward one track.

Press and hold the SEEK/CAT buttons ⏮ or ⏭ for 1.5 seconds while a track is playing to reverse or fast forward the track being played. The track plays at an increased speed while reversing or fast forwarding. When the button is released, the track returns to normal play speed.

RPT button:

Press the RPT button while a track is playing to change the play pattern as follows:

1 TRK RPT → ALL RPT → RPT OFF

1 TRK RPT: the current track will be repeated.

ALL RPT: all songs in the current list are repeated.

RPT OFF: no repeat play pattern is applied.

RDM button:

Press the RDM button while a track is playing to change the play pattern as follows:

TRK SHUFFLE → ALBUM SHUFFLE → SHUFFLE OFF

TRK SHUFFLE: the tracks in the current list will be played randomly.

ALBUM SHUFFLE: the albums in the current list will be played randomly.

SHUFFLE OFF: no random play pattern is applied.

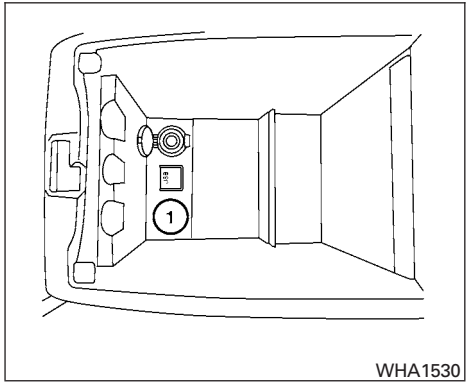

iPod®* PLAYER OPERATION WITH NAVIGATION SYSTEM (if so equipped)

Connecting iPod®

To connect an iPod® to the vehicle so that the iPod® can be controlled with the audio system controls and display screen, use the USB jack located in the center console. Open the protective cover ① on the USB jack in the center console. Then connect the iPod®-specific end of the cable to the iPod® and the USB end of the cable to the USB jack on the vehicle. If your iPod® supports charging via a USB connection, its battery will be charged while connected to the vehicle with the ignition switch in the ACC or ON position.

While connected to the vehicle, the iPod® can only be operated by the vehicle audio controls.

To disconnect the iPod® from the vehicle, remove the USB end of the cable from the USB jack on the vehicle, then remove the cable from the iPod®.

* iPod® is a trademark of Apple Inc., registered in the U.S. and other countries.

Compatibility

The following models are compatible:

- iPod® 5th Generation version 1.2.3
- iPod® Classic - version 1.1.1
- iPod® Touch - version 2.0.0*
- iPod® Nano - 1st generation version 1.3.1
- iPod® Nano - 2nd generation version 1.1.3
- iPod® Nano - 3rd generation version 1.1.3
- iPod® Nano - 4th generation version 1.0.4
- iPod® Nano - 5th generation version 1.0.1

* Some features of this iPod® may not be fully functional.

Make sure that your iPod® firmware is updated to the version indicated above.

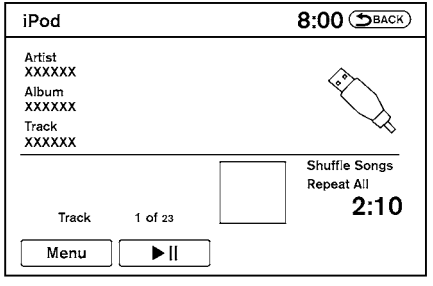

LHA1397

Audio main operation

Place the ignition switch in the ACC or ON position. Press the DISC·AUX button repeatedly to switch to the iPod® mode.

If the system has been turned off while the iPod® was playing, pressing the VOL/ON·OFF control knob will start the iPod®.

DISC·AUX button:

When the DISC·AUX button is pressed with the system off and the iPod® connected, the system will turn on. If another audio source is playing and the iPod® is connected, press the DISC·AUX button repeatedly until the center display changes to the iPod® mode.

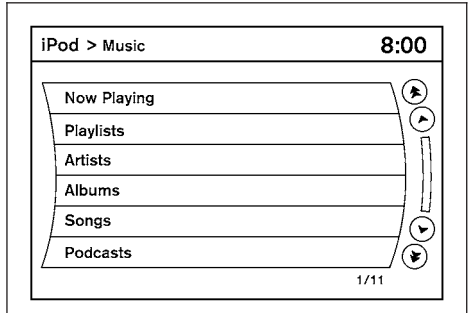

LHA1398

Interface:

The interface for iPod® operation shown on the vehicle center display is similar to the iPod® interface. Use the touchscreen to control your favorite settings.

The following items can be chosen from the menu list screen. For further information about each item, see the iPod® Owner's Manual.

- Now Playing
- Playlists
- Artists
- Albums
- Songs
- Podcasts
- Genres
- Composers
- Audiobooks
- Shuffle Songs

The following keys shown on the screen are also available:

- Menu: returns to the previous screen.
- ▶II : plays/pauses the music selected.

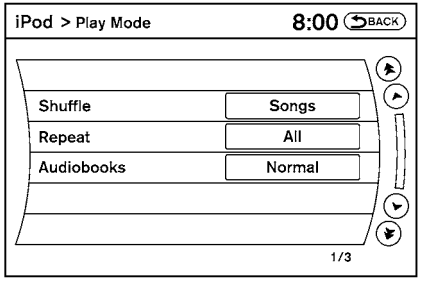

LHA1315

Play mode:

While the iPod® is playing, touch the “Menu” key to display the iPod® menu. Touch the “Play Mode” key to display the Play Mode screen and adjust the settings for Shuffle, Repeat and Audiobooks. For further information about each item, see the iPod® Owner’s Manual.

Seeking button:

When the ⏮ or ⏭ side of the seeking button is pressed for less than 1.5 seconds while the iPod® is playing, the next track or the beginning of the current track on the iPod® will be played.

When the ⏮ or ⏭ side of the seeking button is pressed for more than 1.5 seconds while the iPod® is playing, the iPod® will play while fast forwarding or rewinding. When the button is released, the iPod® will return to the normal play speed.

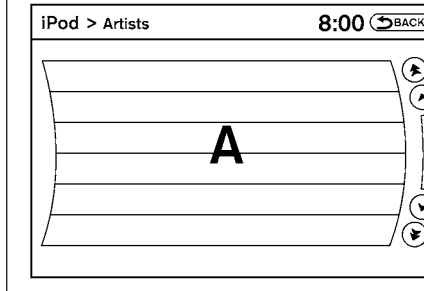

LHA1399

Scrolling menus:

While navigating long lists of artists, albums or songs in the music menu, it is possible to scroll the list by the first letter. To activate letter indexing, touch and hold the page up/down arrows on the touchscreen.

To exit the scrolling by letter mode, perform one of the following:

- Push the ENTER switch on the steering wheel.
- Do not touch the controls for 2 seconds.

MUSIC BOX® (if so equipped)

The Music Box system can store songs from CDs being played. The system has a 9.3 gigabyte (GB) storage capacity.

The following CDs can be recorded in the Music Box system:

- CDs without MP3/WMA files.
- Hybrid Compact Disc Digital Audio (Hybrid CD-DA) specification in Super Audio CDs.
- Compact Disc Digital Audio (CD-DA) specification in CD-Extras.
- First session of multisession disc.

Extreme temperature conditions [below −4°F (−20°C) and above 158°F (70°C)] could affect the performance of the hard-disk.

NOTE:

If the hard drive needs to be replaced due to a malfunction, all stored music data will be erased.

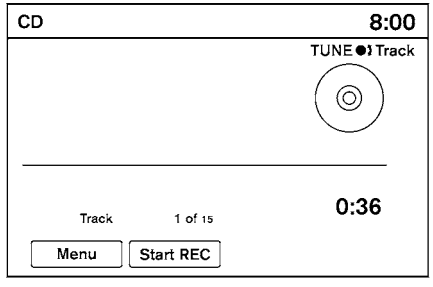

LHA1263

Recording CDs

1. Operate the audio system to play a CD. For information on playing CDs, see “Compact Disc (CD) player operation” in this section.
2. Touch the “Start REC” key. REC CD appears on the screen.

NOTE:

- The system starts playing and recording the 1st track on the CD when the “Start REC” key is selected.

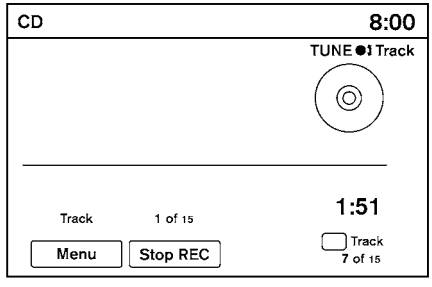

LHA1282

- Individual tracks from a CD cannot be selected to be recorded to the Music Box hard drive.
- The fast forward and rewind features are disabled while the CD is recording.
- The recording process can be stopped at any time. All tracks that were played before the CD was stopped are stored.
- Individual tracks can be deleted from the hard drive after the CD is recorded.
- The system records faster than it plays.

If the title information of the track being recorded is stored either in the hard drive or in the CD, the title is automatically displayed on the screen. For title acquisition from the hard drive, music recognition technology and related data are provided by Gracenote®.

To view the details of the track, touch the “Text” key on the screen. The track name and album title are displayed on the screen.

If a track is not recorded successfully due to skipping sounds, the ⊘ symbol is displayed behind the track number.

The Music Box audio system cannot perform recording under the following conditions:

- There is not enough space in the hard drive.
- The number of albums reaches the maximum of 500.
- The number of tracks reaches the maximum of 3,000.

Automatic recording:

If the “Automatic Recording” function is turned to ON, recording starts when a CD is inserted. For more information, see “Music Box settings” in this section.

Stopping recording:

To stop the recording, touch the “Stop REC” key on the screen. If the CD is ejected, the audio system is turned off or the ignition switch is placed in the OFF position, the recording also stops.

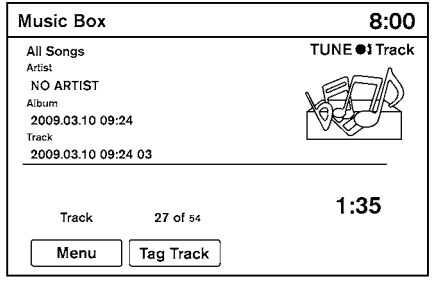

LHA1283

Playing recorded songs

Select the Music Box audio system by using one of the following methods:

- Press the SOURCE select switch on the steering wheel.
  For information, see “Steering wheel switch for audio control” in this section.
- Press the DISC·AUX button repeatedly until the center display changes to the Music Box mode.
- Give voice commands.
  For information, see “NISSAN Voice Recognition system” in this section.

Stopping playback:

The system stops playing when:

- Another mode (radio, CD, USB, Bluetooth® Audio or AUX) is selected.
- The audio system is turned off.
- The ignition switch is placed in the OFF position.

Seeking button:

Press the ⏮ side of the seeking button while a track is playing to return to the beginning of the current track. Press the ⏭ side of the seeking button while a track is playing to skip to the beginning of the next track.

If you press and hold the ⏮ side of the seeking button or the ⏭ side of the seeking button for more than approximately 1.5 seconds; the track will play while rewinding or fast forwarding. When the ⏮ side of the seeking button or the ⏭ side of the seeking button is released, the track will return to the normal playing speed.

TUNE/FOLDER knob:

The TUNE/FOLDER knob skips from album to album unless it is playing “All Songs” from the Music Library menu. When playing “All Songs”, the TUNE/FOLDER knob changes the track instead of the album. The upper right corner of the screen indicates if the TUNE/FOLDER knob is changing by track or album.

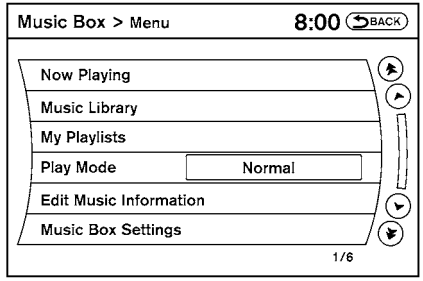

LHA1284

Music Box menu

There are some options available during playback. Select the “Menu” key, then select one of the following that are displayed on the screen, if necessary. Refer to the following information for each item:

- **Now Playing**
  Lists the tracks stored in the Music Box system. Touch the name of the track to begin playing that track.
- **Music Library**
  Lists the songs in the Music Library. Tracks can be searched by Album, Artist or Genre.

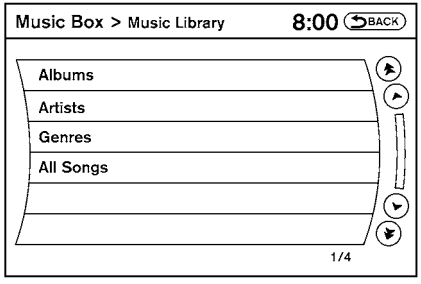

LHA1285

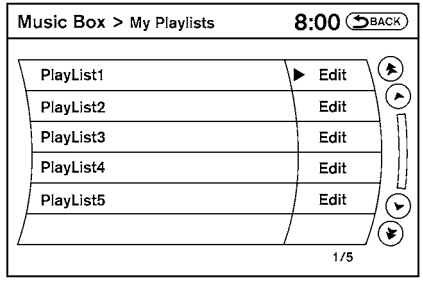

LHA1286

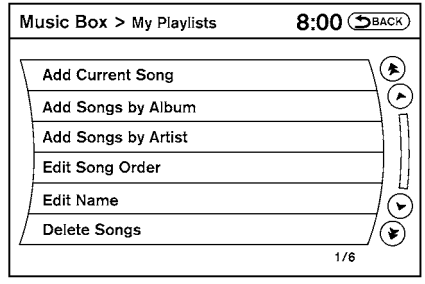

LHA1287

- **My Playlists**
  Displays the playlists stored in the system. Touch the “Edit” key next to a playlist to perform the following operations for that playlist:
  - Add Current Song - adds the song currently playing to the playlist.
  - Add Songs by Album - adds songs to the playlist by album.
  - Add Songs by Artist - adds songs to the playlist by artist.
  - Edit Song Order - edits the order of the songs in the playlist.
  - Edit Name - changes the name of the playlist.
  - Delete Songs - deletes songs from the playlist.

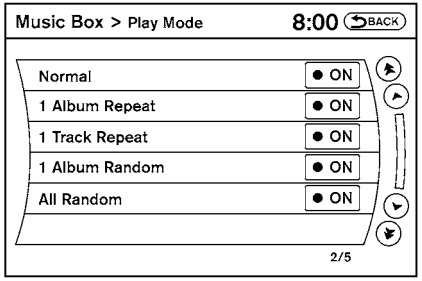

LHA1288

- **Play Mode**
  Alters the play mode of the playlist. Touch the key of the mode you wish to apply. The modes change the play pattern as follows:
  - Normal - no play pattern is applied.
  - 1 Album Repeat - the songs in the current album are repeated.
  - 1 Track Repeat - the current track is repeated.
  - 1 Album Random - the songs in the current album are played randomly.
  - All Random - all songs are played randomly.

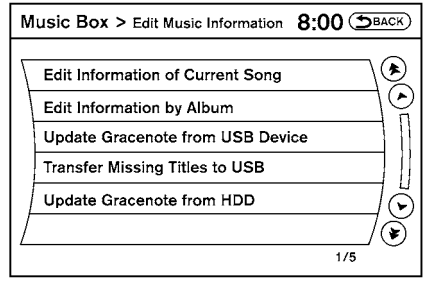

LHA1289

- **Edit Music Information**
  Edits the information of the songs in the Music Library.
  - Edit Information of Current Song
  - Edit Information by Album
  - Update Gracenote from USB Device
  - Transfer Missing Titles to USB
  - Update Gracenote from HDD

The “Transfer Missing Titles to USB” and “Update Gracenote from HDD” options can be used to update the titles of songs in the Music Library. Visit www.nissanusa.com/gracenote for detailed instructions on how to update the Gracenote database.

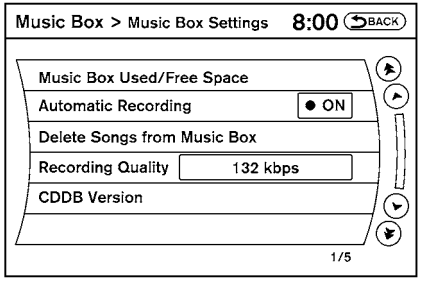

LHA1290

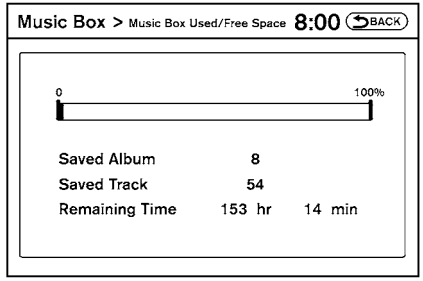

LHA1291

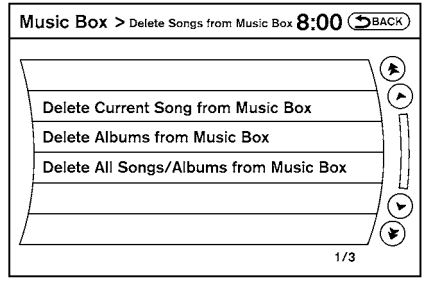

LHA1292

Music Box settings

To set up the Music Box system to your preferred settings, touch the “Menu” key during playback, then touch the “Music Box Settings” key.

- **Music Box Used/Free Space:**
  Displays the number of tracks and albums stored on the hard drive. The percentage of hard drive space taken up and the amount of remaining recording time left are also shown.
- **Automatic Recording:**
  When this item is turned to ON, the Music Box system automatically starts recording when a CD is inserted.
- **Delete Songs from Music Box:**
  Delete music data stored on the hard drive.
- **Recording Quality:**
  Set the recording quality of 105 kbps or 132 kbps. The default is set to 132 kbps.
- **CDDB Version:**
  Shows the version of CDDB (Compact Disc Data Base).

Gracenote®

NOTE:

- The information contained in the Gracenote® Database is not fully guaranteed.
- The service of the Gracenote® Database on the Internet may be stopped without prior notice for maintenance.

gracenote

End-User License Agreement

USE OF THIS PRODUCT IMPLIES ACCEPTANCE OF THE TERMS BELOW.

Gracenote® MusicID™ Terms of Use

This device contains software from Gracenote, Inc. of Emeryville, California ("Gracenote"). The software from Gracenote (the "Gracenote Software") enables this application to do online disc identification and obtain music-related information, including name, artist, track, and title information ("Gracenote Data") from online servers ("Gracenote Servers") and to perform other functions. You may use Gracenote Data only by means of the intended End-User functions of this device.

You agree that you will use Gracenote Data, the Gracenote Software, and Gracenote Servers for your own personal non-commercial use only. You agree not to assign, copy, transfer or transmit the Gracenote Software or any Gracenote Data to any third party. YOU AGREE NOT TO USE OR EXPLOIT GRACENOTE DATA, THE GRACENOTE SOFTWARE, OR GRACENOTE SERVERS, EXCEPT AS EXPRESSLY PERMITTED HEREIN.

You agree that your non-exclusive license to use the Gracenote Data, the Gracenote Software, and Gracenote Servers will terminate if you violate these restrictions. If your license terminates, you agree to cease any and all use of the Gracenote Data, the Gracenote Software, and Gracenote Servers. Gracenote reserves all rights in Gracenote Data, the Gracenote Software, and the Gracenote Servers, including all ownership rights. Under no circumstances will Gracenote become liable for any payment to you for any information that you provide. You agree that Gracenote, Inc. may enforce its rights under this Agreement against you directly in its own name.

The Gracenote MusicID Service uses a unique identifier to track queries for statistical purposes. The purpose of a randomly assigned numeric identifier is to allow the Gracenote MusicID service to count queries without knowing anything about who you are. For more information, see the web page for the Gracenote Privacy Policy for the Gracenote MusicID Service.

The Gracenote Software and each item of Gracenote Data are licensed to you "AS IS." Gracenote makes no representations or warranties, express or implied, regarding the accuracy of any Gracenote Data from in the Gracenote Servers. Gracenote reserves the right to delete data from the Gracenote Servers or to change data categories for any cause that Gracenote deems sufficient. No warranty is made that the Gracenote Software or Gracenote Servers are error-free or that functioning of Gracenote Software or Gracenote Servers will be uninterrupted. Gracenote is not obligated to provide you with new enhanced or additional data types or categories that Gracenote may provide in the future and is free to discontinue its online services at any time.

GRACENOTE DISCLAIMS ALL WARRANTIES EXPRESS OR IMPLIED, INCLUDING, BUT NOT LIMITED TO, IMPLIED WARRANTIES OF MERCHANTABILITY, FITNESS FOR A PARTICULAR PURPOSE, TITLE, AND NONINFRINGEMENT. GRACENOTE DOES NOT WARRANT THE RESULTS THAT WILL BE OBTAINED BY YOUR USE OF THE GRACENOTE SOFTWARE OR ANY GRACENOTE SERVER. IN NO CASE WILL GRACENOTE BE LIABLE FOR ANY

CONSEQUENTIAL OR INCIDENTAL DAMAGES OR FOR ANY LOST PROFITS OR LOST REVENUES.

Copyright:

Music recognition technology and related data are provided by Gracenote®. Gracenote is the industry standard in music recognition technology and related content delivery. For more information visit www.gracenote.com.

CD and music-related data from Gracenote, Inc., copyright © 2000-2007 Gracenote. Gracenote Software, copyright © 2000-2007 Gracenote. This product and service may practice one or more of the following U.S. Patents: #5,987,525; #6,061,680; #6,154,773, #6,161,132, #6,230,192, #6,230,207, #6,240,459, #6,330,593, and other patents issued or pending. Some services supplied under license from Open Globe, Inc. for U.S. Patent: #6,304,523. Gracenote and CDDB are registered trademarks of Gracenote. The Gracenote logo and logotype, and the "Powered by Gracenote" logo are trademarks of Gracenote.

BLUETOOTH® STREAMING AUDIO (if so equipped)

If you have a compatible Bluetooth® audio device that is capable of playing audio files, the device can be connected to the vehicle's audio system so that the audio files on the device play through the vehicle's speakers.

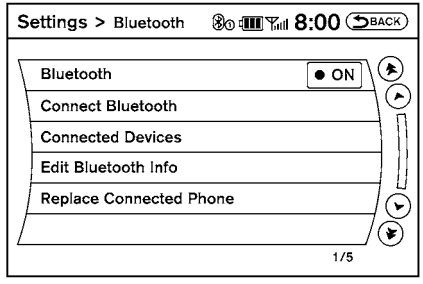

LHA1316

Connecting Bluetooth® audio

To connect your Bluetooth® audio device to the vehicle, follow the procedure below:

1. Press the SETTING button on the instrument panel.
2. Select the "Bluetooth" key.
3. Select the "Connect Bluetooth" key.

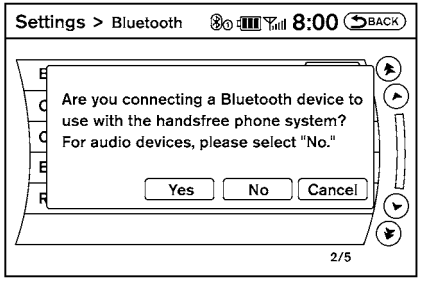

LHA1317

4. A screen will appear asking if you are connecting the device to use with the handsfree phone system. Select the “No” key.

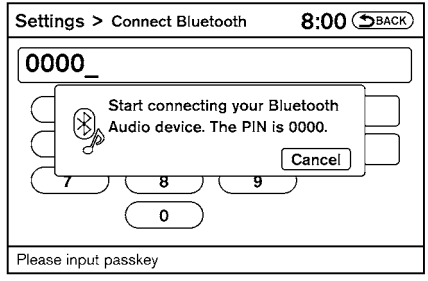

LHA1351

5. Enter a PIN of your choice. It will be needed by your Bluetooth® audio device to complete the connection process. See the Bluetooth® audio device’s owner’s manual for more information.

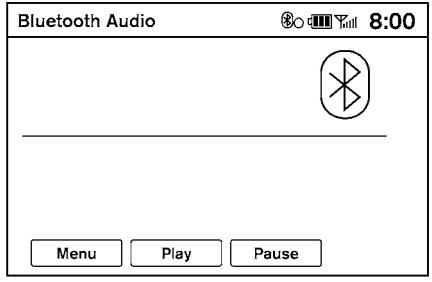

LHA1299

Audio main operation

To switch to the Bluetooth® audio mode, press the DISC-AUX button repeatedly until the Bluetooth® audio mode is displayed on the screen.

The controls for the Bluetooth® audio are displayed on the screen.

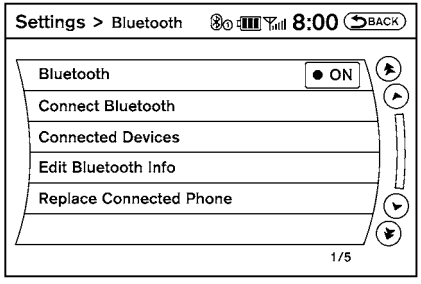

LHA1316

Bluetooth® audio settings

To adjust the Bluetooth® audio settings, follow the procedure below:

1. Press the SETTING button on the instrument panel.
2. Select the “Bluetooth” key.
3. Select the “Connected Devices” key.

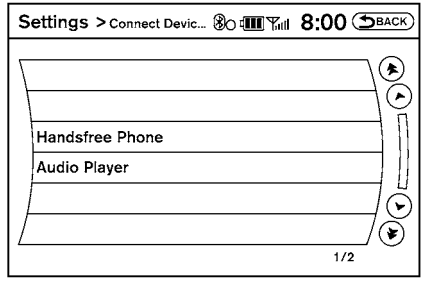

LHA1296

4. Select the “Audio Player” key.

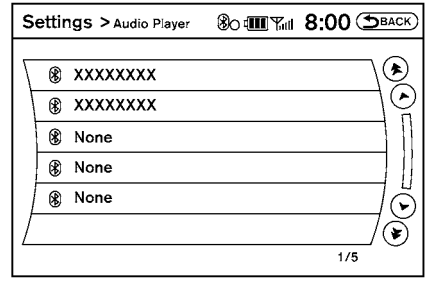

LHA1297

5. A list of the connected Bluetooth® audio players is displayed. Select the name of the device you wish to edit.

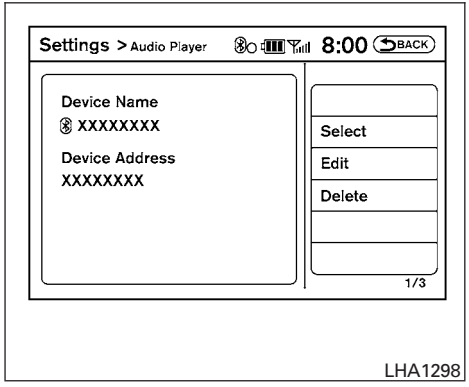

LHA1298

6. The Device Name and Device Address are displayed on the screen. Select the “Select” key to make this device the active Bluetooth® audio player. Select the “Edit” key to edit the details of the player, such as Device Name. Select the “Delete” key to delete the device.

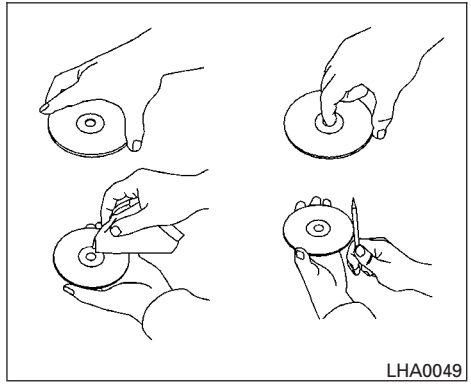
LHA0049

CD CARE AND CLEANING

- Handle a CD by its edges. Do not bend the disc. Never touch the surface of the disc.
- Always place the discs in the storage case when they are not being used.
- To clean a disc, wipe the surface from the center to the outer edge using a clean, soft cloth. Do not wipe the disc using a circular motion.
- Do not use a conventional record cleaner or alcohol intended for industrial use.
- A new disc may be rough on the inner and outer edges. Remove the rough edges by rubbing the inner and outer edges with the side of a pen or pencil as illustrated.

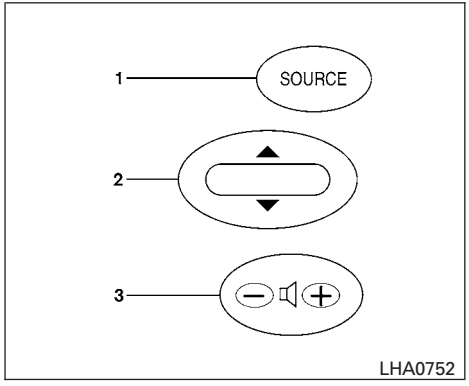

Type A

1. Source select and Power on switch
2. Tuning switch
3. Volume control switch

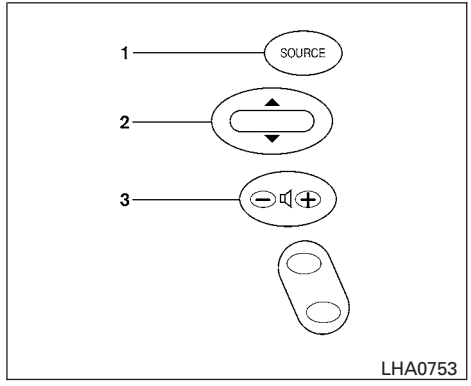

Type B

1. Source select and Power on switch
2. Tuning switch
3. Volume control switch

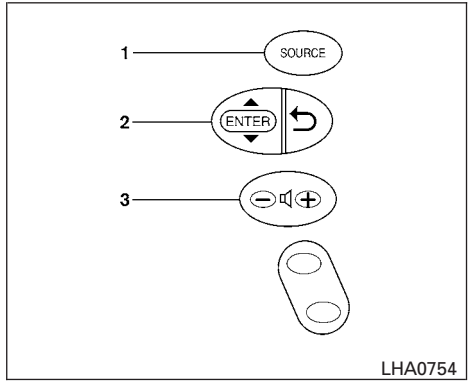

Type C

1. Source select and Power on switch
2. Menu control switch/ENTER button
3. Volume control switch

STEERING WHEEL SWITCH FOR AUDIO CONTROL (if so equipped)

POWER on switch

With the ignition switch in the ACC or ON position, push the SOURCE switch to turn the audio system on.

SOURCE select switch

Push the source select switch to change the mode in the following sequence:

Type A Switch:
PRESET BANK A → PRESET BANK B → PRESET BANK C → CD* → AUX* → PRESET BANK A.

* These modes are only available when compatible media storage is inserted into the device.

While in one of the preset radio station banks (A, B or C), use the tuning switch ▼ or ▲ to select one of the preset radio stations (1 – 6).

Type B Switch:
AM → FM* → XM* (satellite radio, if so equipped) → CD** → USB/iPod** → AUX** → AM

* When using the SOURCE switch, the audio mode switches to the FM preset bank (FM1 or FM2) or XM preset bank (XM1 or XM2) that was last active. To switch between the FM1 and FM2 preset banks or the XM1 and XM2 preset banks, use the controls on the audio system.

** These modes are only available when compatible media is connected to the system.

Type C Switch:
AM → FM1 → FM2 → XM1 → XM2 → XM3 (satellite radio, if so equipped) → CD/DVD*→ Music Box** → USB/iPod®* → Bluetooth® Audio* → AUX* → AM.

* These modes are only available when compatible media storage is inserted into the device.

** This mode is only available when music has been downloaded into the Music Box system.

Volume control switch

Push the volume control switch to increase or decrease the volume.

Tuning (Type A and Type B switches only)

Memory change (radio):

While in one of the preset radio station banks, push the tuning switch ▼ or ▲ for less than 1.5 seconds to change to the next preset station in memory.

Seek tuning (radio):

Push the tuning switch ▼ or ▲ for more than 1.5 seconds to seek the next or previous radio station.

Next/Previous track (CD):

Push the tuning switch ▼ or ▲ for less than 1.5 seconds to return to the beginning of the present track or skip to the next track. Push several times to skip back or skip through tracks.

Menu control switch/ENTER button (Type C switch only)

While the display is showing a map or audio screen, tilt the Menu Control switch upward or downward to select a station, track, CD or folder. For most audio sources, tilting the switch up/down for more than 1.5 seconds provides a different function than a tilting up/down for less than 1.5 seconds.

AM and FM:

- Tilt up/down for less than 1.5 seconds to increase or decrease the preset station.
- Tilt up/down for more than 1.5 seconds to seek up or down to the next station.
- Press the ENTER button to show the list of preset stations.

XM (if so equipped):

- Tilt up/down for less than 1.5 seconds to increase or decrease the preset station.
- Tilt up/down for more than 1.5 seconds to go to the next or previous category.
- Press the ENTER button to show the XM Menu.

iPod®:

- Tilt up/down for less than 1.5 seconds to increase or decrease the track number.
- Press the ENTER button to show the iPod Menu.

CD:

- Tilt up/down for less than 1.5 seconds to increase or decrease the track number.
- Tilt up/down for more than 1.5 seconds to increase or decrease the folder number (if playing compressed audio files).
- Press the ENTER button to show the CD Menu.

DVD:

- Tilt up/down for less than 1.5 seconds to increase or decrease the track number.
- Tilt up/down for more than 1.5 seconds to increase or decrease the title number.
- Press the ENTER button to select an item from the DVD display.
- When the transparent operation menu appears, the switch will control the menu.

USB:

- Tilt up/down for less than 1.5 seconds to increase or decrease the track number.
- Tilt up/down for more than 1.5 seconds to increase or decrease the folder number.
- Press the ENTER button to show the USB Menu.

Music Box:

- Tilt up/down for less than 1.5 seconds to increase or decrease the track number.
- Tilt up/down for more than 1.5 seconds to increase or decrease the album (folder) number (if playing compressed audio files).
- Press the ENTER button to show the Music Box Menu.

Bluetooth® Audio:

- Tilt up/down for less than 1.5 seconds to increase or decrease the track number.

AUX:

- Press the ENTER button to show the AUX Menu.

ANTENNA

Window antenna

The antenna pattern is printed inside the rear window.

⚠ CAUTION

- **Do not place metalized film near the rear window glass or attach any metal parts to it. This may cause poor reception or noise.**
- **When cleaning the inside of the rear window, be careful not to scratch or damage the rear window antenna. Lightly wipe along the antenna with a dampened soft cloth.**

CAR PHONE OR CB RADIO

When installing a CB, ham radio or car phone in your NISSAN, be sure to observe the following precautions; otherwise, the new equipment may adversely affect the engine control system and other electronic parts.

⚠ WARNING

- **A cellular telephone should not be used while driving so full attention may be given to vehicle operation. Some jurisdictions prohibit the use of cellular telephones while driving.**
- **If you must make a call while your vehicle is in motion, the hands free cellular phone operational mode (if so equipped) is highly recommended. Exercise extreme caution at all times so full attention may be given to vehicle operation.**
- **If you are unable to devote full attention to vehicle operation while talking on the phone, pull off the road to a safe location and stop your vehicle.**

⚠ CAUTION

- **Keep the antenna as far away as possible from the electronic control modules.**
- **Keep the antenna wire more than 8 in (20 cm) away from the electronic control system harnesses. Do not route the antenna wire next to any harness.**
- **Adjust the antenna standing-wave ratio as recommended by the manufacturer.**
- **Connect the ground wire from the CB radio chassis to the body.**
- **For details, consult a NISSAN dealer.**

BLUETOOTH® HANDS-FREE PHONE SYSTEM WITHOUT NAVIGATION SYSTEM (if so equipped)

⚠ WARNING

- **Use a phone after stopping your vehicle in a safe location. If you have to use a phone while driving, exercise extreme caution at all times so full attention may be given to vehicle operation.**
- **If you are unable to devote full attention to vehicle operation while talking on the phone, pull off the road to a safe location and stop your vehicle.**

⚠ CAUTION

To avoid discharging the vehicle battery, use a phone after starting the engine.

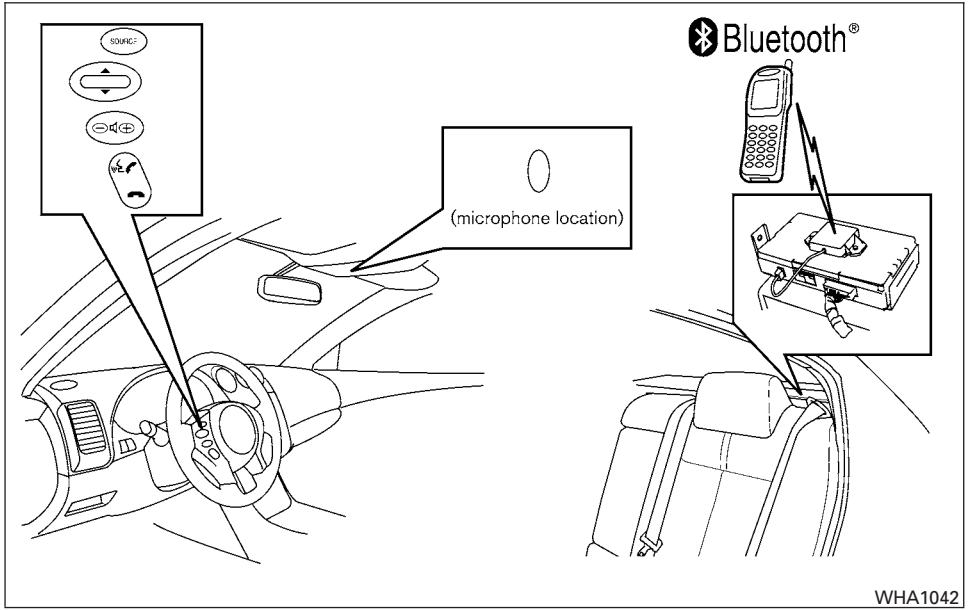

Your NISSAN is equipped with the Bluetooth® Hands-Free Phone System. If you have a compatible Bluetooth® enabled cellular phone, you can set up the wireless connection between your cellular phone and the in-vehicle phone module. With Bluetooth® wireless technology, you can make or receive a hands-free telephone call with your cellular phone in the vehicle.

Once your cellular phone is connected to the in-vehicle phone module, no other phone connecting procedure is required. Your phone is automatically connected with the in-vehicle phone module when the ignition switch is placed in the ON position with the previously connected cellular phone turned on and carried in the vehicle.

You can connect up to 5 different Bluetooth® cellular phones to the in-vehicle phone module. However, you can talk on only one cellular phone at a time.

Before using the Bluetooth® Hands-Free Phone System, refer to the following notes.

- Set up the wireless connection between a compatible cellular phone and the in-vehicle phone module before using the hands-free phone system.
- Some Bluetooth® enabled cellular phones may not be recognized by the in-vehicle phone module. Please visit www.nissanusa.com/bluetooth for a recommended phone list and connecting instructions.
- You will not be able to use a hands-free phone under the following conditions:
  - Your vehicle is outside of the cellular service area.
  - Your vehicle is in an area where it is difficult to receive a cellular signal; such as in a tunnel, in an underground parking garage, near a tall building or in a mountainous area.

– Your cellular phone is locked to prevent it from being dialed.

- When the radio wave condition is not ideal or ambient sound is too loud, it may be difficult to hear the other person's voice during a call.
- Do not place the cellular phone in an area surrounded by metal or far away from the in-vehicle phone module to prevent tone quality degradation and wireless connection disruption.
- While a cellular phone is connected through the Bluetooth® wireless connection, the battery power of the cellular phone may discharge quicker than usual. The Bluetooth® Hands-Free Phone System cannot charge cellular phones.
- If the hands-free phone system seems to be malfunctioning, see "Troubleshooting guide" in this section. You can also visit www.nissanusa.com/bluetooth for troubleshooting help.
- Some cellular phones or other devices may cause interference or a buzzing noise to come from the audio system speakers. Storing the device in a different location may reduce or eliminate the noise.
- Refer to the cellular phone Owner's Manual regarding the telephone charges, cellular phone antenna and body, etc.

REGULATORY INFORMATION

FCC Regulatory information

– CAUTION: To maintain compliance with FCC's RF exposure guidelines, use only the supplied antenna. Unauthorized antenna, modification, or attachments could damage the transmitter and may violate FCC regulations.

– Operation is subject to the following two conditions:

1. This device may not cause interference and
2. this device must accept any interference, including interference that may cause undesired operation of the device.

IC Regulatory information

– Operation is subject to the following two conditions: (1) this device may not cause interference, and (2) this device must accept any interference, including interference that may cause undesired operation of the device.

– This Class B digital apparatus meets all requirements of the Canadian Interference-Causing Equipment Regulations.

Bluetooth®

BLUETOOTH® is a trademark owned by Bluetooth SIG, Inc., U.S.A. and licensed to Visteon.

USING THE SYSTEM

The NISSAN Voice Recognition system allows hands-free operation of the Bluetooth® Phone System.

If the vehicle is in motion, some commands may not be available so full attention may be given to vehicle operation.

Initialization

When the ignition switch is placed in the ON position, NISSAN Voice Recognition is initialized, which takes a few seconds. If the button is pressed before the initialization completes, the system will announce "Hands-free phone system not ready" and will not react to voice commands.

Operating tips

To get the best performance out of the NISSAN Voice Recognition system, observe the following:

- Keep the interior of the vehicle as quiet as possible. Close the windows to eliminate surrounding noises (traffic noises, vibration sounds, etc.), which may prevent the system from recognizing voice commands correctly.
- Wait until the tone sounds before speaking a command. Otherwise, the command will not be received properly.
- Start speaking a command within 5 seconds after the tone sounds.
- Speak in a natural voice without pausing between words.

Giving voice commands

To operate NISSAN Voice Recognition, press and release the button located on the steering wheel. After the tone sounds, speak a command.

The command given is picked up by the microphone, and voice feedback is given when the command is accepted.

- If you need to hear the available commands for the current menu again, say “Help” and the system will repeat them.
- If a command is not recognized, the system announces, “Command not recognized. Please try again.” Repeat the command in a clear voice.
- If you want to go back to the previous command, you can say “Go back” or “Correction” any time the system is waiting for a response.
- You can cancel a command when the system is waiting for a response by saying, “Cancel” or “Quit.” The system announces “Cancel” and ends the VR session. You can also press and hold the button on the steering wheel for 5 seconds at any time to end the VR session. Whenever the VR session is cancelled, a double beep is played to indicate you have exited the system.
- If you want to adjust the volume of the voice feedback, press the volume control switches (+ or -) on the steering wheel while being provided with feedback. You can also use the radio volume control knob.
- In most cases you can interrupt the voice feedback to speak the next command by pressing the button on the steering wheel.
- To use the system faster, you may speak the second level commands with the main menu command on the main menu. For example, press the button and after the tone say, “Call Redial.”

NOTE:

The combined command of Call and (a Name) cannot be used.

How to say numbers

NISSAN Voice Recognition requires a certain way to speak numbers in voice commands. Refer to the following rules and examples.

- Either “zero” or “oh” can be used for “0”.

  Example: 1-800-662-6200

  – “One eight oh oh six six two six two oh oh”, or

  – “One eight zero zero six six two six two oh oh”

- Words can be used for the first 4 digits places only.

  Example: 1-800-662-6200

  – “One eight hundred six six two six two oh oh”,

– NOT “One eight hundred six six two sixty two hundred,” and

– NOT “One eight oh oh six six two sixty two hundred”

- Numbers can be spoken in small groups. The system will prompt you to continue entering digits, if desired.

  Example: 1-800-662-6200

  – “One eight zero zero”

  The system repeats the numbers and prompts you to enter more.

  – “six six two”

  The system repeats the numbers and prompts you to enter more.

  – “six two zero zero”

- Say “pound” for “#”. Say “star” for “*” (available when using the “Special number” command and the “Send” command during a call).

  See “List of voice commands” and “Special number” in this section for more information.

  Example: 1-555-1212 *123

  – “One five five five one two one two star one two three”

- Say “plus” for “+” (available only when using the “Special Dialing” command).

- Say “pause” for a 2-second pause (available only when storing a phone book number).

NOTE:

For best results, say phone numbers as single digits.

The voice command “Help” is available at any time. Please use the “Help” command to get information on how to use the system.

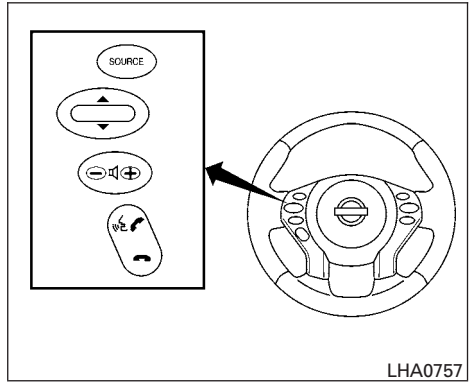

CONTROL BUTTONS

The control buttons for the Bluetooth® Hands-Free Phone System are located on the steering wheel.

PHONE/SEND

Press the button to initiate a VR session or answer an incoming call.

You can also use the button to interrupt the system feedback and give a command at once. See “List of voice commands” and “During a call” in this section for more information.

PHONE/END

While the voice recognition system is active, press and hold the button for 5 seconds to quit the voice recognition system at any time.

TUNING SWITCH

While using the voice recognition system, tilt the tuning switch up or down to manually control the phone system.

GETTING STARTED

The following procedures will help you get started using the Bluetooth® Hands-Free Phone System with NISSAN Voice Recognition. For additional command options, refer to “List of voice commands” in this section.

Choosing a language

You can interact with the Bluetooth® Hands-Free Phone System using English, Spanish or French.

To change the language, perform the following.

1. Press and hold the button for more than 5 seconds.
2. The system announces: “Press the PHONE/SEND ( ) button for the hands-free phone system to enter the speaker adaptation mode or press the PHONE/END ( ) button to select a different language.”
3. Press the button.

   For information on speaker adaptation, see “Speaker Adaptation (SA) mode” in this section.
4. The system announces the current language and gives you the option to change the language to Spanish (in Spanish) or French (in French). To select the current language, press the PHONE/SEND ( ) button. To select a different language, tilt the tuning switch (or) up or down.

NOTE:

You must press the button within 5 seconds to change the language.

5. If you decide not to change the language, do not press either button. After 5 seconds, the VR session will end, and the language will not be changed.

Connecting procedure

NOTE:

The connecting procedure must be performed when the vehicle is stationary. If the vehicle starts moving during the procedure, the procedure will be cancelled.

Main Menu
“Connect phone” Ⓐ
“Add phone” Ⓑ
Initiate from handset Ⓒ
Name phone Ⓓ

1. Press the button on the steering wheel. The system announces the available commands.
2. Say: “Connect phone” Ⓐ. The system acknowledges the command and announces the next set of available commands.

3. Say: “Add phone” Ⓑ. The system acknowledges the command and asks you to initiate connecting from the phone handset Ⓒ.

   The connecting procedure of the cellular phone varies according to each cellular phone model. See the cellular phone Owner’s Manual for details. You can also visit www.nissanusa.com/bluetooth for instructions on connecting NISSAN recommended cellular phones.

   When prompted for a Passkey code, enter “1234” from the handset. The Passkey code “1234” has been assigned by NISSAN and cannot be changed.

4. The system asks you to say a name for the phone Ⓓ.

   If the name is too long or too short, the system tells you, then prompts you for a name again.

   Also, if more than one phone is connected and the name sounds too much like a name already used, the system tells you, then prompts you for a name again.

Making a call by entering a phone number

Main Menu
- “Call” Ⓐ
  - “Phone Number” Ⓑ
    - Speak the digits Ⓒ
      - “Dial” Ⓓ

1. Press the button on the steering wheel. A tone will sound.
2. Say: “Call” Ⓐ. The system acknowledges the command and announces the next set of available commands.

   Say: “Special Dialing” to dial more than 10 digits or any special characters.
3. Say “Phone Number” Ⓑ. The system acknowledges the command and announces the next set of available commands.
4. Say the number you wish to call starting with the area code in single digit format Ⓒ. If the system has trouble recognizing the correct phone number, try entering the number in the following groups: 3-digit area code, 3-digit prefix and the last 4-digits. For example, 555-121-3354 can be said as “five five five” as the 1st group, then “one two one” as the 2nd group, and “three three five four” as the 3rd group. For dialing more than 10 digits or any special characters, say “Special Dialing”. See “How to say numbers” in this section for more information.
5. When you have finished speaking the phone number, the system repeats it back and announces the available commands.
6. Say: “Dial” Ⓓ. The system acknowledges the command and makes the call.

For additional command options, see “List of voice commands” in this section.

Receiving a call

When you hear the ring tone, press the button on the steering wheel.

Once the call has ended, press the button on the steering wheel.

NOTE:

If you do not wish to take the call when you hear the ring tone, press the button on the steering wheel.

For additional command options, see “List of voice commands” later in this section.

LIST OF VOICE COMMANDS

```
Main Menu
        "Call"
        "Phonebook"
        "Recent Calls"
        "Connect Phone"
```

When you press and release the button on the steering wheel, you can choose from the commands on the Main Menu. The following pages describe these commands and the commands in each sub-menu.

Remember to wait for the tone before speaking.

After the main menu, you can say "Help" to hear the list of commands currently available any time the system is waiting for a response.

If you want to end an action without completing it, you can say "Cancel" or "Quit" at any time the system is waiting for a response. The system will end the VR session. Whenever the VR session is cancelled, a double beep is played to indicate you have exited the system.

If you want to go back to the previous command, you can say "Go back" or "Correction" any time the system is waiting for a response.

"Call"

```
Main Menu
    "Call"
        (Speak name) Ⓐ
        "Phone Number"
            (Speak Digits) Ⓑ
            "Special Number" Ⓒ
        "Redial" Ⓓ
        "Call Back" Ⓔ
```

(Speak name) Ⓐ

If you have stored entries in the phonebook, you can dial a number associated with a name and location.

See "Phonebook" in this section to learn how to store entries.

When prompted by the system, say the name of the phone book entry you wish to call. The system acknowledges the name.

If there are multiple locations associated with the name, the system asks you to choose the location.

Once you have confirmed the name and location, the system begins the call.

(Speak Digits) Ⓑ

When prompted by the system, say the number you wish to call. Refer to "How to say numbers" and "Making a call by entering a phone number" in this section for more details.

"Special Number" Ⓒ

For dialing more than 10 digits or any special characters, say "Special Number". When the system acknowledges the command, the system will prompt you to speak the number.

"Redial" Ⓓ

Use the Redial command to call the last number that was dialed.

The system acknowledges the command, repeats the number and begins dialing.

If a redial number does not exist, the system announces, "There is no number to redial" and ends the VR session.

"Call Back" Ⓔ

Use the Call Back command to dial the number of the last incoming call within the vehicle.

The system acknowledges the command, repeats the number and begins dialing.

If a call back number does not exist, the system announces, “There is no number to call back” and ends the VR session.

During a call

During a call there are several command options available. Press the button on the steering wheel to mute the receiving voice and enter commands.

- “Help” — The system announces the available commands.
- “Go back/Correction” — The system announces “Go back,” ends the VR session and returns to the call.
- “Cancel/Quit” — The system announces “Cancel,” ends the VR session and returns to the call.
- “Send/Enter/Call/Dial” — Use the Send command to enter numbers, “*” or “#” during a call. For example, if you were directed to dial an extension by an automated system:

  Say: “Send one two three four.”

  The system acknowledges the command and sends the tones associated with the numbers. The system then ends the VR session and returns to the call. Say “star” for “*”, Say “pound” for “#”.
- “Transfer call” — Use the Transfer Call command to transfer the call from the Bluetooth® Hands-Free Phone System to the cellular phone when privacy is desired.

  The system announces, “Transfer call. Call transferred to privacy mode.” The system then ends the VR session.

  To reconnect the call from the cellular phone to the Bluetooth® Hands-Free System, press the button.
- “Mute” — Use the Mute command to mute your voice so the other party cannot hear it. Use the mute command again to unmute your voice.

NOTE:

If a call is ended or the cellular phone network connection is lost while the Mute feature is on, the Mute feature will be reset to “off” for the next call so the other party can hear your voice.

“Phonebook” (phones without automatic phonebook download function)

NOTE:

The “Transfer Entry” command is not available when the vehicle is moving.

Main Menu
- “Phonebook”
  - “Transfer Entry” Ⓐ
  - “Delete Entry” Ⓑ
  - “List Names” Ⓒ

For phones that do not support automatic download of the phonebook (PBAP Bluetooth® profile), the “Phonebook” command is used to manually add entries to the vehicle phonebook.

The phonebook stores up to 40 names for each phone connected to the system.

NOTE:

Each phone has its own separate phonebook. You cannot access Phone A’s phonebook if you are currently connected with Phone B.

“Transfer Entry” Ⓐ

Use the Transfer Entry command to store a new name in the system.

When prompted by the system, say the name you would like to give the new entry.

For example, say: “Mary.”

If the name is too long or too short, the system tells you, then prompts you for a name again.

Also, if the name sounds too much like a name already stored, the system tells you, then prompts you for a name again.

The system will ask you to transfer a phone number stored in the cellular phone’s memory.

Enter a phone number by voice command:

For example, say: “five five five one two one two.” See “How to say numbers” in this section for more information.

To transfer a phone number stored in the cellular phone’s memory:

Say “Transfer entry.” The system acknowledges the command and asks you to initiate the transfer from the phone handset. The new contact phone number will be transferred from the cellular phone via the Bluetooth® communication link.

The transfer procedure varies according to each cellular phone. See the cellular phone Owner’s Manual for details. You can also visit www.nissanusa.com/bluetooth for instructions on transferring phone numbers from NISSAN recommended cellular phones.

The system repeats the number and prompts you for the next command. When you have finished entering numbers or transferring an entry, choose “Store.”

The system confirms the name, location and number.

“Delete Entry” Ⓑ

Use the Delete Entry command to erase one entry from the phonebook. After the system recognizes the command, speak the name to delete or say “List Names” to choose an entry.

“List Names” Ⓒ

Use the List Names command to hear all the names in the phonebook.

The system recites the phonebook entries but does not include the actual phone numbers. When the playback of the list is complete, the system goes back to the main menu.

You can stop the playback of the list at any time by pressing the button on the steering wheel. The system ends the VR session.

“Phonebook” (phones with automatic phonebook download function)

NOTE:

The “Transfer Entry” command is not available when the vehicle is moving.

Main Menu
- “Phonebook”
  - “List Names” Ⓐ
  - “Transfer Entry” Ⓑ
  - “Delete Entry” Ⓒ
  - “Record Name” Ⓓ

For phones that support automatic download of the phonebook (PBAP Bluetooth® profile), the “Phonebook” command is used to manage entries in the vehicle phonebook. You can say the name of an entry at this menu to initiate dialing of that entry.

The phonebook stores up to 1000 names for each phone connected to the system.

When a phone is connected to the system, the phonebook is automatically downloaded to the vehicle. This feature allows you to access your phonebook from the Bluetooth® system and call contacts by name. You can record a custom voice tag for contact names that the system has difficulty recognizing. For more information see “Record name” in this section.

NOTE:

Each phone has its own separate phonebook. You cannot access Phone A's phonebook if you are currently connected with Phone B.

"List Names" Ⓐ

Use the List Names command to hear all the names and locations in the phone book.

The system recites the phone book entries but does not include the actual phone numbers. When the playback of the list is complete, the system goes back to the main menu.

You can stop the playback of the list at any time by pressing the button on the steering wheel. The system ends the VR session. See the "Record name" command in this section for information about recording custom voice tags for list entries that the system has difficulty pronouncing.

"Transfer Entry" Ⓑ

Use the Transfer Entry command to store a new name in the system.

When prompted by the system, say the name you would like to give the new entry.

For example, say: "Mary."

If the name is too long or too short, the system tells you, then prompts you for a name again.

Also, if the name sounds too much like a name already stored, the system tells you, then prompts you for a name again.

The system will ask you to transfer a phone number stored in the cellular phone's memory.

Enter a phone number by voice command:

For example, say: "five five five one two one two." See "How to say numbers" in this section for more information.

To transfer a phone number stored in the cellular phone's memory:

Say "Transfer entry." The system acknowledges the command and asks you to initiate the transfer from the phone handset. The new contact phone number will be transferred from the cellular phone via the Bluetooth® communication link.

The transfer procedure varies according to each cellular phone. See the cellular phone Owner's Manual for details. You can also visit www.nissanusa.com/bluetooth for instructions on transferring phone numbers from NISSAN recommended cellular phones.

The system repeats the number and prompts you for the next command. When you have finished entering numbers or transferring an entry, choose "Store."

The system confirms the name, location and number.

"Delete Entry" Ⓒ

Use the Delete Entry command to erase one entry from the phonebook. After the system recognizes the command, speak the name to delete or say "List Names" to choose an entry.

"Record Name" Ⓓ

The system allows you to record custom voice tags for contact names in the phonebook that the vehicle has difficulty recognizing. This feature can also be used to record voice tags to directly dial an entry with multiple numbers. Up to 40 voice tags can be recorded to the system.

"Recent Calls"

Main Menu
- "Recent Calls"
  - "Outgoing" Ⓐ
  - "Incoming" Ⓑ
  - "Missed" Ⓒ

Use the Recent Calls command to access outgoing, incoming or missed calls.

“Outgoing” Ⓐ

Use the Outgoing command to list the outgoing calls made from the vehicle.

“Incoming” Ⓑ

Use the Incoming command to list the incoming calls made to the vehicle.

“Missed” Ⓒ

Use the Missed command to list the calls made to the vehicle that were not answered.

“Connect Phone”

NOTE:

The Add Phone command is not available when the vehicle is moving.

Main Menu
- “Connect Phone”
  - “Add Phone” Ⓐ
  - “Select Phone” Ⓑ
  - “Delete Phone” Ⓒ
  - “Turn Bluetooth OFF” Ⓓ

Use the Connect Phone commands to manage the phones connecting to the vehicle or to enable the Bluetooth® function on the vehicle.

“Add Phone” Ⓐ

Use the Add Phone command to add a phone to the vehicle. See “Connecting procedure” in this section for more information.

“Select Phone” Ⓑ

Use the Select Phone command to select from a list of phones connected to the vehicle. The system will list the names assigned to each phone and then prompt you for the phone you wish to select. Only one phone can be active at a time.

“Delete Phone” Ⓒ

Use the Delete Phone command to delete a phone that is connected to the vehicle. The system will list the names assigned to each phone and then prompt you for the phone you wish to delete. Deleting a phone from the vehicle will also delete that phonebook for that phone.

“Turn Bluetooth OFF” Ⓓ

Use the Turn Bluetooth OFF command to prevent a wireless connection to your phone.

SPEAKER ADAPTATION (SA) MODE

Speaker Adaptation allows up to two out-of-dialect users to train the system to improve recognition accuracy. By repeating a number of commands, the users can create a voice model of their own voice that is stored in the system. The system is capable of storing a different speaker adaptation model for each connected phone.

Training procedure

The procedure for training a voice is as follows.

1. Position the vehicle in a reasonably quiet outdoor location.
2. Sit in the driver’s seat with the engine running, the parking brake on, and the transmission in P (Park).
3. Press and hold the button for more than 5 seconds.
4. The system announces: “Press the PHONE/SEND ( ) button for the hands-free phone system to enter the speaker adaptation mode or press the PHONE/END ( ) button to select a different language.”

5. Press the button.

   For information on selecting a different language, see “Choosing a language” in this section.

6. Voice memory A or memory B is selected automatically. If both memory locations are already in use, the system will prompt you to overwrite one. Follow the instructions provided by the system.
7. When preparation is complete and you are ready to begin, press the button.
8. The SA mode will be explained. Follow the instructions provided by the system.
9. When training is finished, the system will tell you an adequate number of phrases have been recorded.
10. The system will announce that speaker adaptation has been completed and the system is ready.

The SA mode will stop if:

- The button is pressed for more than 5 seconds in SA mode.
- The vehicle begins moving during SA mode.
- The ignition switch is placed in the OFF or LOCK position.

Training phrases

During the SA mode, the system instructs the trainer to say the following phrases. (The system will prompt you for each phrase.)

- phonebook transfer entry
- dial three oh four two nine
- delete call back number
- incoming
- transfer entry
- eight pause nine three two pause seven
- delete all entries
- call seven two four zero nine
- phonebook delete entry
- next entry
- dial star two one seven oh
- yes
- no
- select
- missed
- dial eight five six nine two
- Bluetooth on
- outgoing
- call three one nine oh two
- nine seven pause pause three oh eight
- cancel
- call back number
- call star two zero nine five
- delete phone
- dial eight three zero five one
- record name
- four three pause two nine pause zero
- delete redial number
- phonebook list names
- call eight oh five four one
- correction
- connect phone
- dial seven four oh one eight
- previous entry
- delete
- dial nine seven two six six
- call seven six three oh one
- go back
- call five six two eight zero
- dial six six four three seven

MANUAL CONTROL

While using the voice recognition system, it is possible to select menu options by using the steering wheel controls instead of speaking voice commands. The manual control mode does not allow dialing a phone number by digits. The user may select an entry from the Phonebook or Recent Calls lists. To re-activate voice recognition, exit the manual control mode by pressing and holding the PHONE/END ( ) button. At that time, pressing the PHONE/SEND ( ) button will start the Hands Free Phone System.

Operating tips

- To enter manual control mode, start the voice recognition system and tilt the tuning ( ) switch up or down. The system will speak "Showing Manual Options" when manual controls are initially activated.
- To browse the menu options, tilt the tuning ( ) switch up or down. The system will always speak the current menu option. Depending on the audio display, it will also show the current menu option.
- To select the current menu option, press the PHONE/SEND ( ) button.
- To go back to the previous menu, press the PHONE/END ( ) button. If the current menu is the Main Menu, pressing the PHONE/END ( ) button will exit the Phone system.
- To exit the manual control mode, press and hold the PHONE/END ( ) button for 5 seconds.

TROUBLESHOOTING GUIDE

The system should respond correctly to all voice commands without difficulty. If problems are encountered, try the following solutions.

Where the solutions are listed by number, try each solution in turn, starting with number 1, until the problem is resolved.

Symptom	Solution
System fails to interpret the command correctly.	1. Ensure that the command is valid. See “List of voice commands” in this section.
	2. Ensure that the command is spoken after the tone.
	3. Speak clearly without pausing between words and at a level appropriate to the ambient noise level in the vehicle.
	4. Ensure that the ambient noise level is not excessive (for example, windows open or defroster on). NOTE: If it is too noisy to use the phone, it is likely that the voice commands will not be recognized.
	5. If more than one command was said at a time, try saying the commands separately.
	6. If the system consistently fails to recognize commands, the voice training procedure should be carried out to improve the recognition response for the speaker. See “Speaker Adaptation (SA) mode” in this section.
The system consistently selects the wrong entry from the phone book.	1. Ensure that the phone book entry name requested matches what was originally stored. This can be confirmed by using the “List Names” command. See “Phonebook” in this section.
	2. Replace one of the names being confused with a new name.

BLUETOOTH® HANDS-FREE PHONE SYSTEM WITH NAVIGATION SYSTEM (if so equipped)

⚠ WARNING

- **Use a phone after stopping your vehicle in a safe location. If you have to use a phone while driving, exercise extreme caution at all times so full attention may be given to vehicle operation.**
- **If you are unable to devote full attention to vehicle operation while talking on the phone, pull off the road to a safe location and stop your vehicle.**

⚠ CAUTION

To avoid discharging the vehicle battery, use a phone after starting the engine.

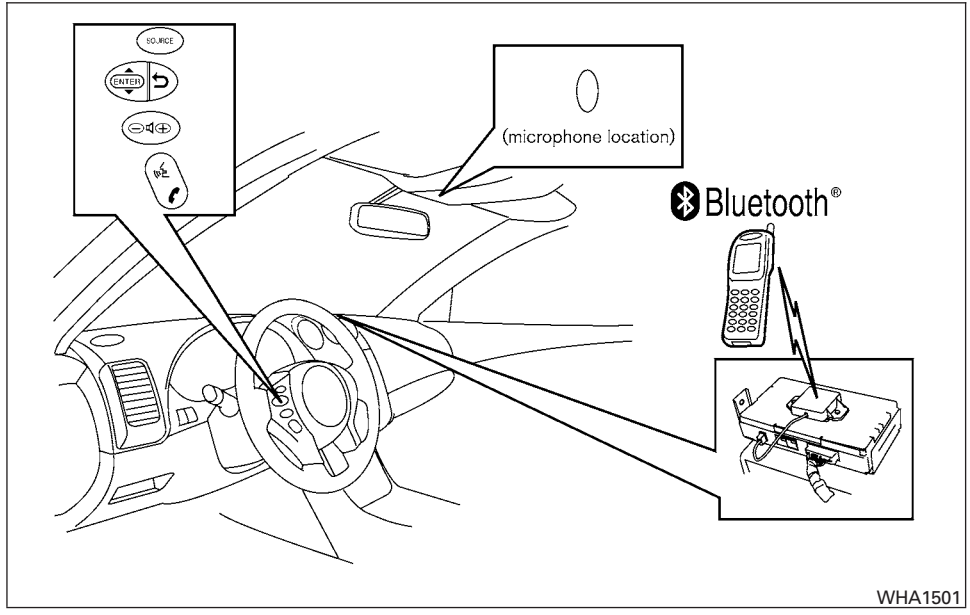

Your NISSAN is equipped with the Bluetooth® Hands-Free Phone System. If you have a compatible Bluetooth® enabled cellular phone, you can set up the wireless connection between your cellular phone and the in-vehicle phone module. With Bluetooth® wireless technology, you can make or receive a hands-free telephone call with your cellular phone in the vehicle.

Once your cellular phone is connected to the in-vehicle phone module, no other phone connecting procedure is required. Your phone is automatically connected with the in-vehicle

phone module when the ignition switch is placed in the ON position with the connected cellular phone turned on and carried in the vehicle.

You can register up to 5 different Bluetooth® cellular phones to the in-vehicle phone module. However, you can talk on only one cellular phone at a time.

NISSAN Voice Recognition system supports the phone commands, so dialing a phone number using your voice is possible. For more details, see "NISSAN Voice Recognition System" in this section.

Before using the Bluetooth® Hands-Free Phone System, refer to the following notes.

- Set up the wireless connection between a cellular phone and the in-vehicle phone module before using the hands-free phone system.
- Some Bluetooth® enabled cellular phones may not be recognized by the in-vehicle phone module. Please visit www.nissanusa.com/bluetooth for a recommended phone list and connecting.
- You will not be able to use a hands-free phone under the following conditions:
  - Your vehicle is outside of the cellular service area.
  - Your vehicle is in an area where it is difficult to receive cellular signal; such as in a tunnel, in an underground parking garage, near a tall building or in a mountainous area.
  - Your cellular phone is locked to prevent it from being dialed.
- When the radio wave condition is not ideal or ambient sound is too loud, it may be difficult to hear the other person's voice during a call.
- Immediately after the ignition switch is placed in the ON position, it may be impossible to receive a call for a short period of time.
- Do not place the cellular phone in an area surrounded by metal or far away from the in-vehicle phone module to prevent tone quality degradation and wireless connection disruption.
- While a cellular phone is connected through the Bluetooth® wireless connection, the battery power of the cellular phone may discharge quicker than usual. The Bluetooth® Hands-Free Phone System cannot charge cellular phones.
- If the hands-free phone system seems to be malfunctioning, see "Troubleshooting guide" in this section. You can also visit www.nissanusa.com/bluetooth for troubleshooting help.
- Some cellular phones or other devices may cause interference or a buzzing noise to come from the audio system speakers. Storing the device in a different location may reduce or eliminate the noise.
- Refer to the cellular phone owner's manual regarding the telephone charges, cellular phone antenna and body, etc.
- The signal strength display on the monitor will not coincide with the signal strength display of some cellular phones.
- If reception between callers is unclear, adjusting the incoming or outgoing call volume may improve the clarity. See "Call volume" in this section.

REGULATORY INFORMATION

FCC Regulatory information

- CAUTION: To maintain compliance with FCC's RF exposure guidelines, use only the supplied antenna. Unauthorized antenna, modification, or attachments could damage the transmitter and may violate FCC regulations.
- Operation is subject to the following two conditions:
  1. This device may not cause interference and
  2. this device must accept any interference, including interference that may cause undesired operation of the device.

IC Regulatory information

- Operation is subject to the following two conditions: (1) this device may not cause interference, and (2) this device must accept any interference, including interference that may cause undesired operation of the device.
- This Class B digital apparatus meets all requirements of the Canadian Interference-Causing Equipment Regulations.

Bluetooth®

BLUETOOTH® is a trademark owned by Bluetooth SIG, Inc., U.S.A. and licensed to Clarion.

VOICE COMMANDS

You can use voice commands to operate various Bluetooth® Hands-Free Phone System features using the NISSAN Voice Recognition system. For more details, see "NISSAN Voice Recognition System" in this section.

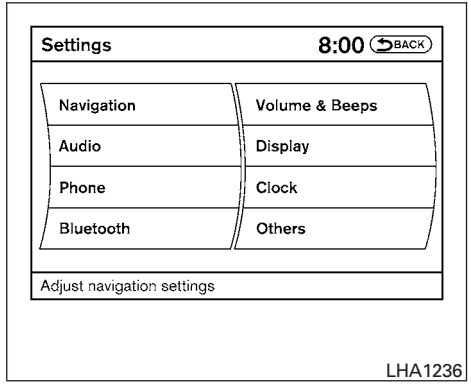

CONNECTING PROCEDURE

1. Press the SETTING button on the instrument panel and select the "Bluetooth" key on the display.

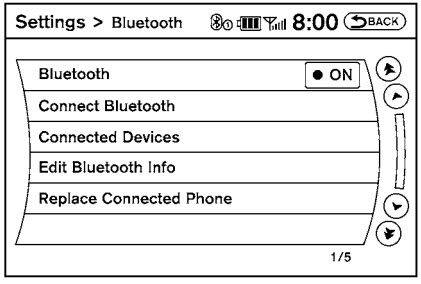

LHA1316

2. Select the “Connect Bluetooth” key.

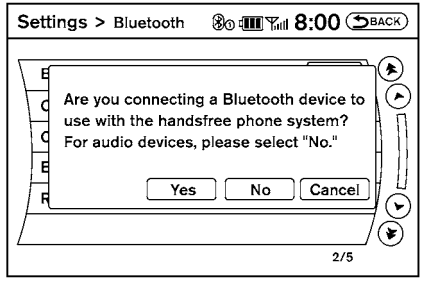

LHA1317

3. A popup box will appear on the screen, prompting you to confirm that the connection is for the phone system. Select the “Yes” key.

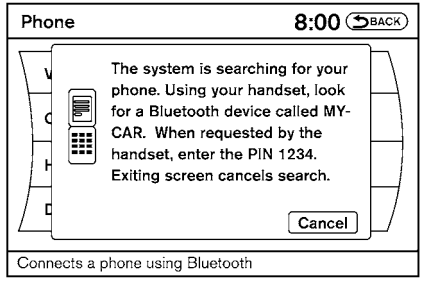

LHA1318

4. When a PIN code appears on the screen, operate the Bluetooth® cellular phone to enter the PIN code.

   The connecting procedure of the cellular phone varies according to each cellular phone. See the cellular phone Owner’s Manual for details. You can also visit www.nissanusa.com/bluetooth or call the NISSAN Consumer Affairs Department for instructions on connecting recommended cellular phones.

   When the connecting is complete, the screen will return to the Bluetooth® settings screen.

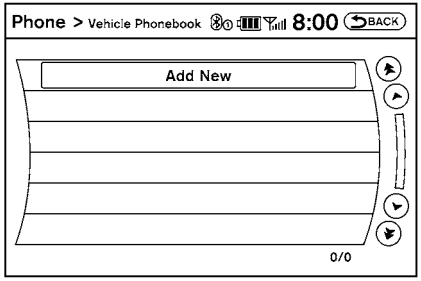

LHA1320

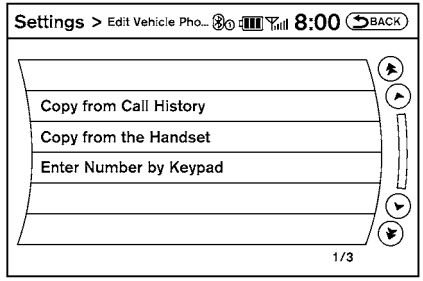

LHA1321

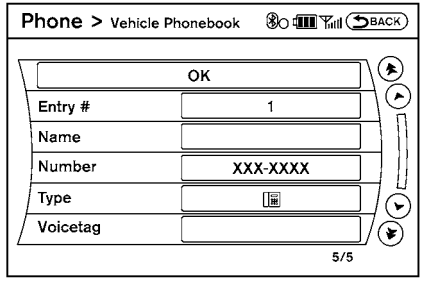

LHA1381

VEHICLE PHONEBOOK

This vehicle has two phonebooks available for your use. Depending on your phone, the system may automatically download your entire cell phone's phonebook into the "Handset Phonebook". For the details on downloading your phonebook, see "Handset phonebook" in this section. If your phonebook does not automatically download, you may set up the vehicle phonebook for up to 40 entries. This phonebook allows you to record a name to speak while using voice recognition.

1. Press the button on the steering wheel.
2. Select the "Vehicle Phonebook" key
3. Select the "Add New" key at the top of the screen.
4. Choose the method for entering the phonebook entry. For this example, select "Enter Number by Keypad".
5. Enter the digits and select the "OK" key. For more information, see "How to use the touch screen" in this section.
6. Select the "Voicetag" key to record a name to speak when using the Voice Recognition system.
7. Select the "Store" key and prepare to speak the name after the tone.
8. When the voicetag is successfully saved ( ), select the "OK" key to save the phonebook entry.
9. After the phonebook entry is saved, it will show a screen that is ready to call the number. Select the "Back" key to return to the Vehicle Phonebook.

- **Copy from Call History**
  The system will show a list of your incoming, outgoing or missed calls that were downloaded from your cell phone (depending on your phone's compatibility). You may select one of these entries to save in the vehicle phonebook.
- **Copy from the Handset**
  The system will show your cell phone's phonebook that was downloaded (depending on your phone's compatibility). You may select one of these entries to save in the vehicle phonebook.

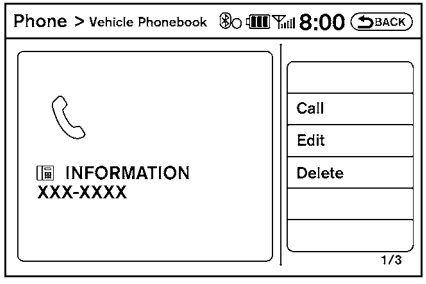

LHA1382

- **Editing the Vehicle Phonebook**

1. Press the button on the steering wheel.
2. Select the "Vehicle Phonebook" key.
3. Select the desired entry from the displayed list.
4. Select the "Edit" key.

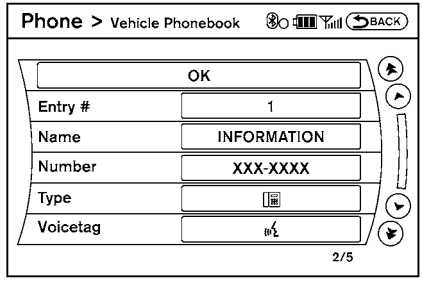

LHA1383

5. Select the desired item to change.

The following editing items are available:

- Entry #
  Changes the displayed number of the selected entry.
- Name
  Edit the name of the entry using the keypad displayed on the screen.
- Number
  Edit the phone number using the keypad displayed on the screen.
- Type
  Select the icon from the icon list.

- Voicetag
  Confirm and store the voicetag. Voicetags allow easy dialing using the NISSAN Voice Recognition system. For more information, see “NISSAN Voice Recognition System” in this section.

To delete an entry, select the “Delete” key at step 3.

HANDSET PHONEBOOK

Many phones will support an automatic download of the cellular phone’s phonebook. Since this method allows for up to 1000 numbers to be stored and entries are automatically assigned voice tags by the system, this is a useful function for easy dialing supported by the Voice Recognition system.

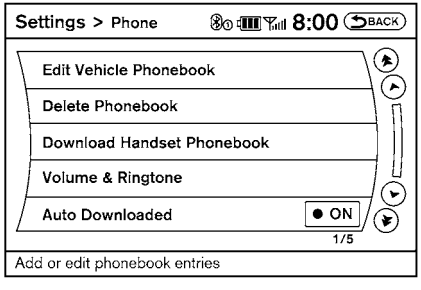

LHA1319

Transferring the handset phonebook

If your cellular phone supports automatic downloading, the system transfers the handset phonebook automatically by default. To ensure that this feature is activated, press the SETTING button on the instrument panel and select the “Phone” key. The “Auto Downloaded” selection should have the amber indicator next to the word ON activated. Select the “Auto Downloaded” key to toggle this feature on or off.

To transfer the handset phonebook to the vehicle manually, follow these steps:

1. Press the SETTING button on the instrument panel.
2. Select the “Phone” key.
3. Select the “Download Handset Phonebook” key.

Once the handset phonebook is transferred to the vehicle, it can be accessed by pressing the button on the steering wheel, then selecting the “Handset Phonebook” key.

Whether the handset phonebook is transferred manually or automatically, the process can take up to five minutes to complete, depending on the size of the handset phonebook. See the cellular phone’s owner’s manual for more details.

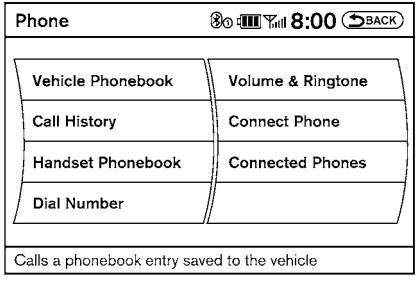

LHA1322

MAKING A CALL

To make a call, follow the procedure below:

1. Press the button on the steering wheel. The “Phone” screen will appear on the display.
2. Select one of the following options to make a call:

- Vehicle Phonebook: Select the name from an entry stored in the vehicle phonebook.
- Handset Phonebook: Select the name from an entry stored in the handset phonebook.
- Call History: Select the name from the incoming or outgoing call history.
- Dial Number: Input the phone number manually using a keypad displayed on the screen. For information on how to use the touch-screen, see “How to use the touch screen” in this section.

3. For all of the methods listed in Step 2 except “Dial Number”, dialing commences when the listed name is selected. Dialing commences when “OK” is selected if the number is inputted manually. The screen changes to the “Call in Progress” screen.
4. After the call is over, perform one of the following to finish the call:

   a. Select the “Hang up” key on the Call in Progress screen.

   b. Press the switch on the steering wheel.

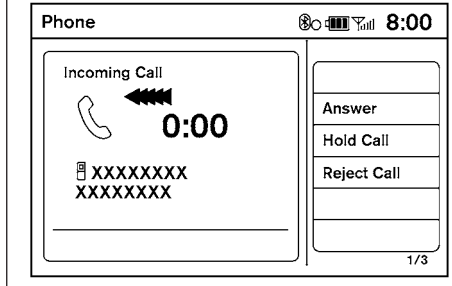

LHA1323

RECEIVING A CALL

When you hear a phone ring, the display will change to phone mode. To receive a call, follow one of the procedures listed below.

a. Select the “Answer” key on the display.

b. Press the phone button on the steering wheel switches.

There are some options available when receiving a call. Select one of the following displayed on the screen.

Answer:
Accept an incoming call to talk.

Hold Call:
Put an incoming call on hold.

Reject Call:
Reject an incoming call.

To finish the call, follow one of the procedures listed below:

a. Select the “Reject Call” key on the display.

b. Press and hold the phone button on the steering wheel switches.

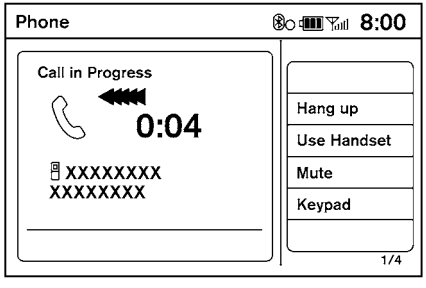

LHA1324

DURING A CALL

There are some options available during a call. Select one of the following displayed on the screen, if necessary:

Hang up:
Finish the call.

Use Handset:
Transfer the call to the cellular phone.

Mute:
Mute your voice to the person.

Keypad:
Brings up a keypad; enter digits when needed. For example, entering your PIN number for voicemail.

NOTE:

Pushing the TALK switch on the steering wheel during a call allows numbers and digits to be sent using Voice Recognition.

Cancel Mute:
This will appear after the “Mute” key is selected. Mute will be cancelled.

To adjust the person’s voice to be louder or quieter, press the volume control switch located on the steering wheel switches or turn the volume control knob on the instrument panel while talking on the phone. This adjustment is also available in the SETTING mode.

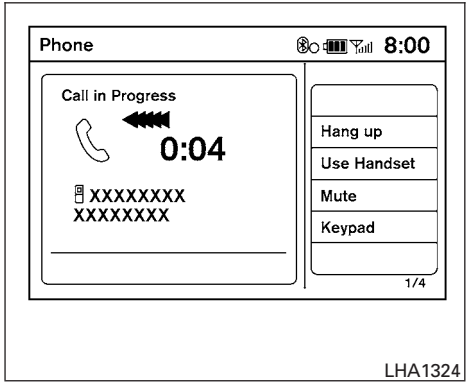

ENDING A CALL

To finish the call, perform one of the following procedures:

- Select the “Hang up” key on the “Call in Progress” display.
- Push the switch on the steering wheel.

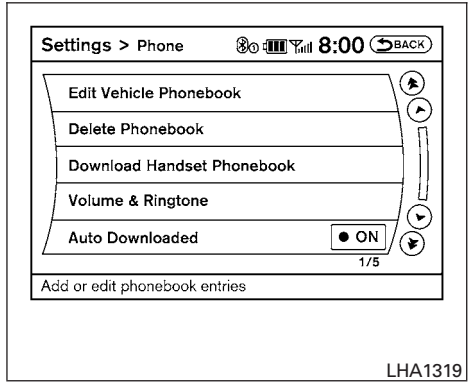

PHONE SETTINGS

To set up the Bluetooth® Hands-Free Phone System to your preferred settings, press the SETTING button on the instrument panel and select the “Phone” key on the display.

Edit Vehicle Phonebook:
See “Vehicle Phonebook” in this section for adding, editing and deleting contacts in the vehicle phonebook.

Delete Phonebook:
Delete a phonebook stored on the system.

Download Handset Phonebook:
See “Handset Phonebook” in this section for adding, editing and deleting contacts in the handset phonebook.

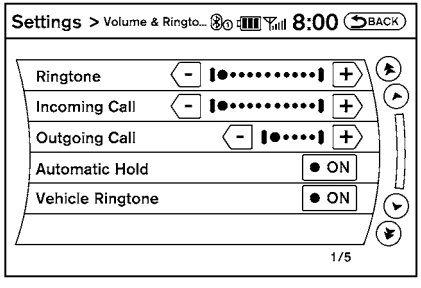

LHA1325

Volume & Ringtone:
Adjust the volume level of the ringtone, incoming call sound and outgoing call sound. When the "Automatic Hold" option is turned on, an incoming call will be placed on hold automatically after several rings. When the "Vehicle Ringtone" option is turned on, a specific ringtone that is different from the cellular phone's will sound when receiving a call.

Auto Downloaded:
See "Handset Phonebook" in this section for information about automatically downloading the handset phonebook.

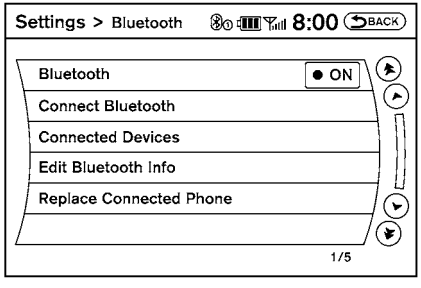

LHA1316

BLUETOOTH SETTINGS

To set up the Bluetooth® Hands-Free Phone System to your preferred settings, press the SETTING button on the instrument panel and select the "Bluetooth" key on the display.

Bluetooth:
Turn the Bluetooth® system on or off.

Connect Bluetooth:
See "Connecting procedure" in this section for more information about connecting a phone.

Connected Devices:
Display a list of the Bluetooth® devices connected to the system.

Edit Bluetooth Info:
Check information about the device name, device address and device PIN.

Replace Connected Phone:
Replace the phone currently connected to the system. This option allows you to keep any voice-etags that were recorded using the previous phone.

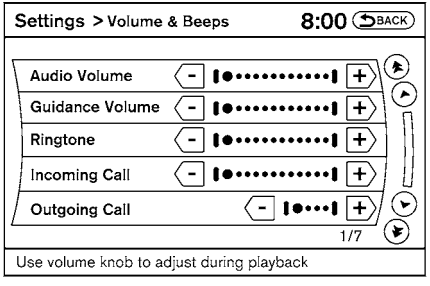

LHA1253

CALL VOLUME

Adjusting the incoming or outgoing call volume may improve clarity if reception between callers is unclear.

- Incoming call — adjusting this setting allows *you* to hear a difference in volume.
- Outgoing call — adjusting this setting allows *the person you are talking with* to hear a difference in volume.

To access the settings, press the SETTING button, then select “Volume & Beeps”.

You can also adjust the volume of an incoming voice during a call by pushing the volume control switch on the steering wheel or by turning the volume control knob on the instrument panel.

NISSAN VOICE RECOGNITION SYSTEM (if so equipped)

NISSAN Voice Recognition allows hands-free operation of the systems equipped on this vehicle, such as phone and vehicle information.

There are two voice recognition modes of operation available. They are:

- Standard Mode
- Alternate Command Mode

In Standard Mode (the factory default setting), commands that are available are always shown on the display and announced by the system. You can complete your desired operation by simply following the prompts given by the system. Not all NISSAN Voice Recognition options are available while in Standard Mode.

For advanced operation, you can change to an Alternate Command Mode that enables the operation of the display, audio, and climate control through NISSAN Voice Recognition. When this mode is active, an expanded list of commands can be spoken after pushing the TALK switch on the steering wheel, and the voice command menu prompts are turned off.

In Alternate Command Mode the recognition success rate may be affected because the number of available commands and the ways of speaking each command are increased. See “NISSAN Voice Recognition Alternate Command Mode” in this section.

To improve the recognition success rate when Alternate Command Mode is active, try using the Speaker Adaptation Function available in that mode. See “Speaker Adaptation Function” in this section. Otherwise, it is recommended that Alternate Command Mode be turned off and Standard Mode be used for the best recognition performance.

While using the NISSAN Voice Recognition system for certain Phone and Navigation features, you can switch to using manual controls (touchscreen, steering wheel controls) and the information you have already entered by voice control will be retained. To switch to manual controls, select the “Manual Controls” key on the display when it appears. The system will respond by speaking “Changing to manual operation. Please use manual controls to continue.”

For the voice commands for the navigation system, refer to the Navigation System Owner’s Manual of your vehicle.

For vehicles in the U.S., the factory default setting is the Standard Mode. See “NISSAN Voice Recognition Standard Mode” in this section. For vehicles in Canada, the factory default setting is the Alternate Command Mode. See “NISSAN Voice Recognition Alternate Command Mode” in this section.

NISSAN VOICE RECOGNITION STANDARD MODE

The Standard Mode enables control of navigation, phone and vehicle information. With this setting active, commands that are available are always shown on the display and announced by the system.

Displaying user guide

If you use the NISSAN Voice Recognition system for the first time or you do not know how to operate it, you can display the User Guide for confirmation.

You can confirm how to use voice commands by accessing a simplified User Guide, which contains basic instructions and tutorials for several voice commands.

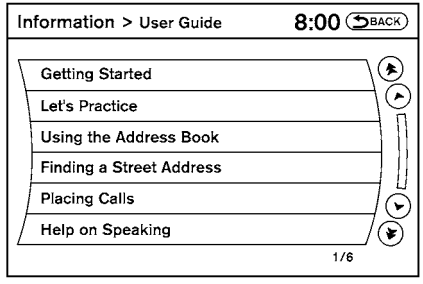

LHA1326

1. Press the INFO button on the instrument panel.
2. Select the “Voice Recognition” key.

NOTE:

You can skip steps 1 and 2 by pressing the switch and saying “Help”.

3. Select the “User Guide” key.
4. Select an item.

Available items:

- Getting Started

  Describes the basics of how to operate the Voice Recognition system.

- Let's Practice

  Initiates a practice session that demonstrates how to improve voice recognition by the system.

- Using the Address Book

  Tutorial for using the Address Book

- Finding a Street Address

  Tutorial for entering a destination by street address.

- Placing Calls

  Tutorial for making a phone call by voice command operation.

- Help on Speaking

  Displays useful tips of speaking for correct command recognition by the system.

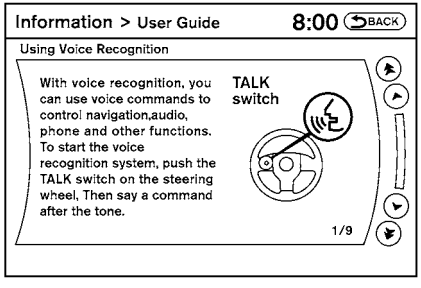

LHA1329

Getting started

Before using the Voice Recognition system for the first time, you can confirm how to use commands by viewing the Getting Started section of the User Guide.

1. Select the "Getting Started" key.
2. You can confirm the page by scrolling the screen.

Tutorials on the operation of the Voice Recognition system

If you choose "Finding a Street Address", "Using the Address Book" or "Placing Calls", you can view tutorials on how to perform these operations using Voice Recognition.

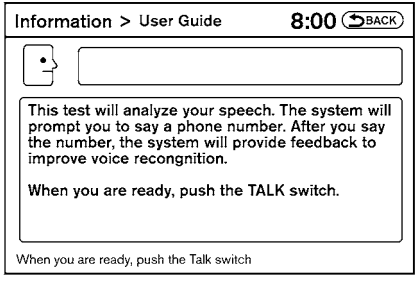

LHA1327

Let's Practice

The system is equipped with a tutorial that allows you to practice saying commands and receive feedback on the volume, speed and timing of your speech.

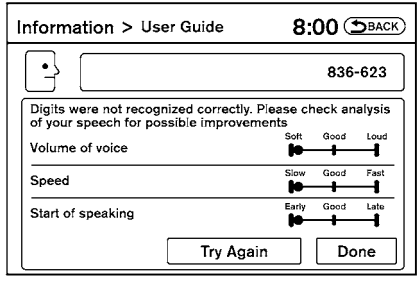

LHA1328

To initiate a practice session, access the User Guide and select the "Let's Practice" key. Follow the on-screen prompts until the session is complete. After the session is completed, a screen will be displayed that shows an analysis of different elements of your speech. Select the "Try Again" to repeat the session if improvement is needed. Select the "Done" key to return to the User Guide screen.

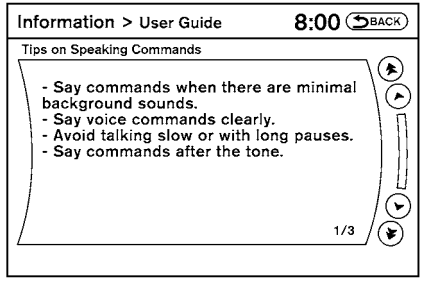

LHA1330

Useful tips for correct operation

You can display useful speaking tips to help the system recognize your voice commands correctly.

1. Select "Help on Speaking".
2. You can confirm the page by scrolling the screen.

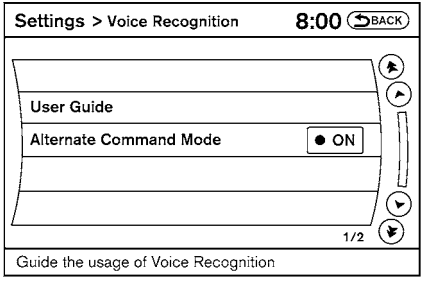

LHA1331

Voice recognition settings

The available settings of the NISSAN Voice Recognition system are described.

1. Select “Voice Recognition”.
2. You can confirm the page by scrolling the screen.

USING THE SYSTEM

Initialization

When the ignition switch is placed in the ON position, NISSAN Voice Recognition is initialized, which takes a few seconds. When completed, the system is ready to accept voice commands. If the switch is pressed before the initialization completes, voice commands will not be accepted. Please wait until the NISSAN Voice Recognition initialization is completed.

BEFORE STARTING

To get the best recognition performance from Voice Recognition, observe the following:

- The interior of the vehicle should be as quiet as possible. Close the windows to eliminate the surrounding noises (traffic noise and vibration sounds, etc.), which may prevent the system from correctly recognizing the voice commands.
- Wait until the tone sounds before speaking a command.
- Speak in a natural conversational voice without pausing between words.
- If the air conditioner is set to “Auto”, the fan speed is automatically lowered so that your commands can be recognized more easily.

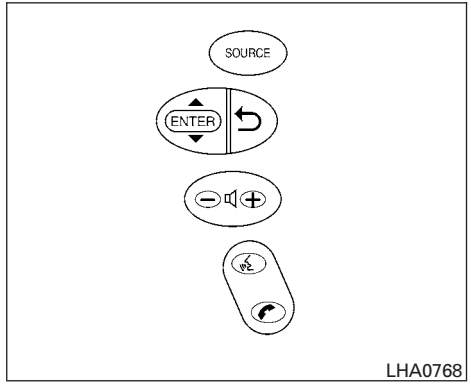

LHA0768

GIVING VOICE COMMANDS

1. Press the switch located on the steering wheel.

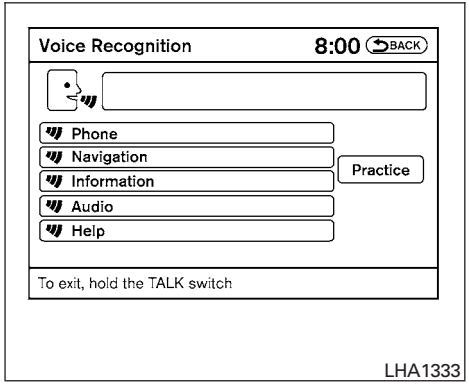

2. A list of commands appears on the screen, and the system announces, “Would you like to access Phone, Navigation, Information, Audio or Help?”
3. After the tone sounds and the icon on the screen changes from to , speak a command.
4. Continue to follow the voice menu prompts and speak after the tone sounds until your desired operation is completed.

Operating tips

- Say a command after the tone. Voice commands cannot be accepted when the icon is .
- Commands that are available are always shown on the display and spoken through voice menu prompts. Commands other than those that are displayed are not accepted. Please follow the prompts given by the system.
- If the command is not recognized, the system repeats the announcement. Repeat the command in a clear voice.
- Press the switch on the steering wheel to return to the previous screen.
- If you want to cancel the command, press and hold the switch. The message, “Voice cancelled” will be announced.
- If you want to adjust the volume of the system feedback, push the volume control switch on the steering wheel or use the audio system volume knob while the system is making an announcement.

How to speak numbers

Voice Recognition requires a certain way to speak numbers when giving voice commands. Refer to the following examples.

General rule:

- Only single digits 0 (zero) to 9 can be used.
- When saying the phone number 800-662-6200, the system will accept “eight-hundred” in addition to “eight zero zero” or “eight oh oh”. 500, 700, and 900 are also supported.

Examples:

- 1-800-662-6200
  - “One eight zero zero six six two six two zero zero”
  - “One eight hundred six six two six two zero zero”

Improving Recognition of Phone numbers:

You can improve the recognition of phone numbers by saying the phone number in three groups of numbers. For example, when you try to call 800-662-6200, say “eight zero zero” first, and the system will then ask you for the next three digits. Then, say “six six two”. After recognition, the system will then ask for the last four digits. Say, “six two zero zero”. Using this method of phone digit entry can improve recognition performance.

NOTE:

When speaking a house number, speak the number “0” as “zero” or “oh”. If the letter “O” is included in the house number, it will not be recognized as “0” even if you speak “oh” instead of “zero”.

Standard Mode command list

Category Command:

COMMAND	ACTION
Phone	Displays Phone function commands.
Navigation	Displays Navigation function commands.
Information	Displays Vehicle Information.
Audio	Displays Audio commands.
Help	Displays User Guide.

Phone Command:

COMMAND	ACTION
Dial Number	Makes a call to a spoken phone number up to 10 digits.
Change Number	Corrects the phone number when it is not recognized (available during phone number entry).
Vehicle Phonebook	Makes a call to a contact that is stored in the vehicle phonebook.
Handset Phonebook	Makes a call to a contact that is stored in the handset phonebook.
Call History	Makes a call to a number in the incoming or outgoing call logs.
International Call	Makes an international call by allowing more than 10 digits to be spoken, as well as star (*), pound (#), and plus (+).

Navigation Command:

COMMAND	ACTION
Home	Sets a route to your home that is stored in the Address Book.
Address	Searches for a location by the street address specified, and sets a route (for continental US and Canada only).
Places	Sets a route to a facility near the current vehicle location.
Address Book	Searches for a location stored in the Address Book.
Previous Destinations	Sets a route to a previous destination.

Information Command:

COMMAND	ACTION
Traffic Info.	Turns the traffic information system on and off.
Where am I?	Displays current vehicle location.

Audio Command:

COMMAND	ACTION
AM	Changes the audio system mode to AM radio.
FM	Changes the audio system mode to FM radio.
XM	Changes the audio system mode to satellite radio.
Music Box	Changes the audio system mode to Music Box.
CD	Changes the audio system mode to CD.

Voice command examples

Some basic voice command examples are described here.

For navigation system commands, see the separate Navigation System Owner's Manual.

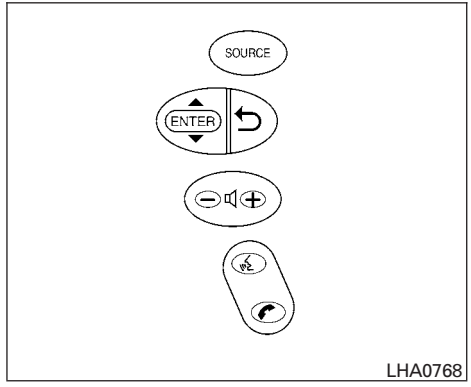

Example 1 — Placing a call to the phone number 800-662-6200:

1. Press the switch located on the steering wheel.

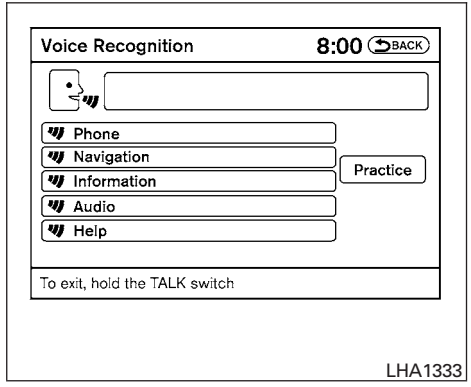

2. The system announces, "Would you like to access Phone, Navigation, Information, Audio or Help?"
3. Say "Phone".

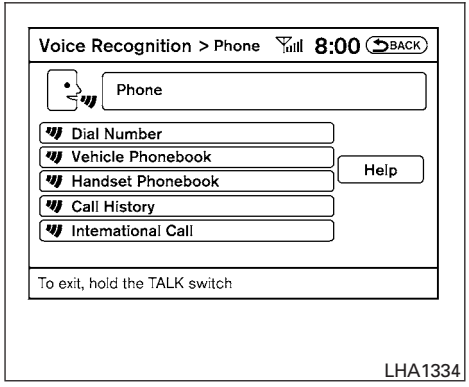

4. Say “Dial Number”.

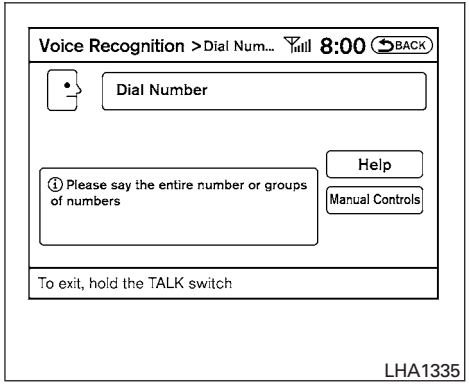

5. Say “800”.

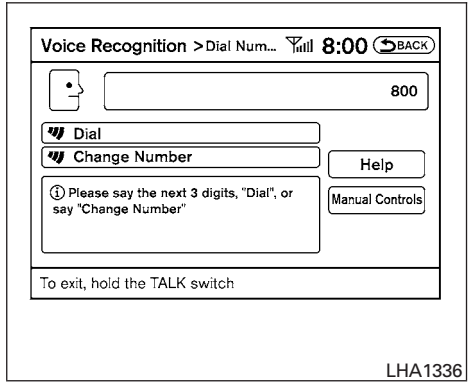

6. The system announces, “Please say the next three digits or dial, or say change number.”
7. Say “662”.

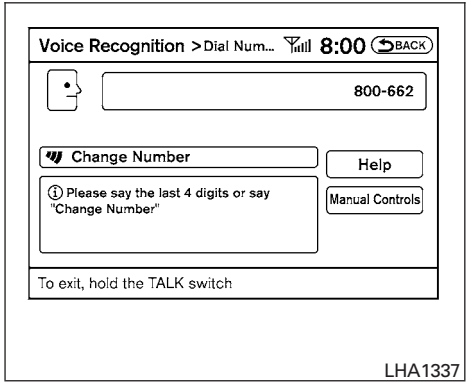

8. The system announces, “Please say the last four digits or say change number.”
9. Say “6200”.

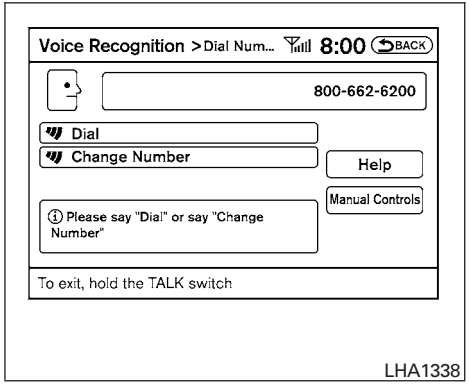

10. The system announces, “Dial or Change Number?”
11. Say “Dial”.
12. The system makes a call to 800-662- 6200.

NOTE:

- You can also speak “800-662-6200” (10 continuous digits) or “662-6200” (7 continuous digits), if the area code is not necessary. However, the 3-3-4 digit grouping is recommended for improved recognition. See “How to speak numbers” in this section.
- You can only say a phone number using the 3-3-4 grouping, 7 digits, and 10 digits using this command. Please use the “International Call” command for all other formats, and when special characters such as star (*), pound (#), and plus (+) need to be entered.
- If you say “Change Number” during phone number entry, the system will automatically request that you repeat the number using the 3-3-4 format. In this case please say the area code first and then follow the prompts.
- Do not add a “1” in front of the area code when speaking phone numbers.
- If the system does not recognize your command, please try repeating the command using a natural voice. Speaking too slowly or too loudly may further decrease recognition performance.

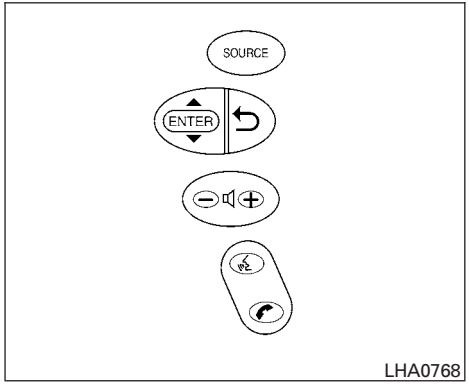

Example 2 — Placing an international call to the phone number 011-81-111-222-3333:

1. Press the switch located on the steering wheel.

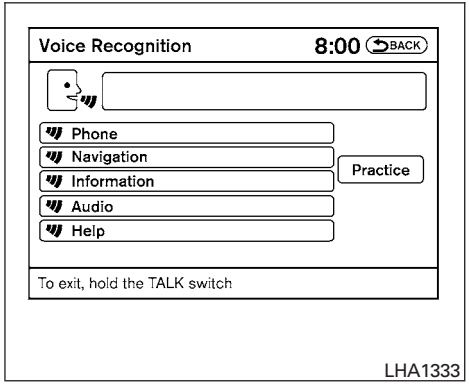

2. The system announces, “Would you like to access Phone, Navigation, Information, Audio or Help?”
3. Say “Phone”.

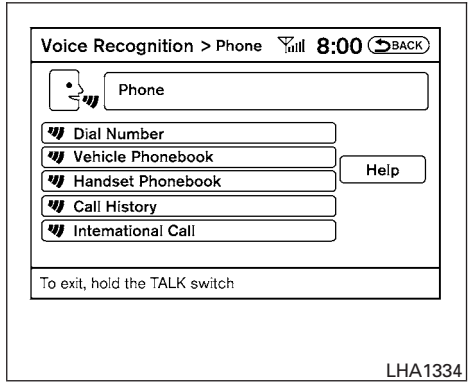

4. Say “International Call”.

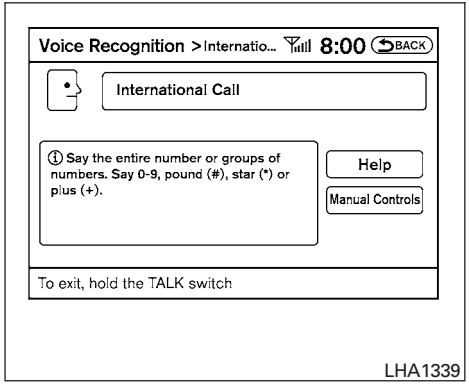

5. Say “011811112223333”.

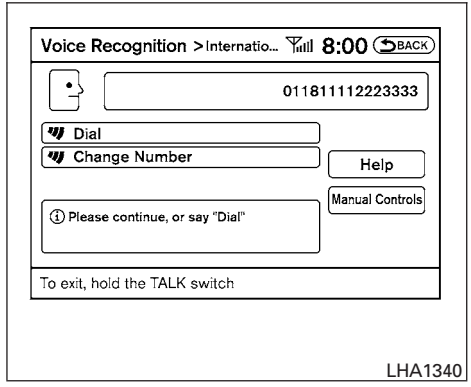

6. Say “Dial”.
7. The system makes a call to 011-81-111-222-3333.

NOTE:

Any digit input format is available in the International Number input process, as well as the special characters such as star (*), pound (#), and plus (+).

NISSAN VOICE RECOGNITION ALTERNATE COMMAND MODE

The Alternate Command Mode enables control of the Audio, Climate Control and Display systems as well as additional commands for the Vehicle Information, Phone and Navigation systems. With this setting active, the system does not announce or display the available commands at each step.

When Alternate Command Mode is activated, an expanded list of commands can be used after pushing the TALK switch. Under this mode, the screen for Standard Mode commands is not available on the display. Please review the expanded command list, available when this mode is active, as some Standard Mode commands are replaced. Please see examples of Alternate Command Mode screens.

Please note that in this mode the recognition success rate may be affected as the number of available commands and ways of speaking each command are increased. You can turn this mode ON or OFF. When this mode is activated, the Voice Recognition Settings will change to show more options.

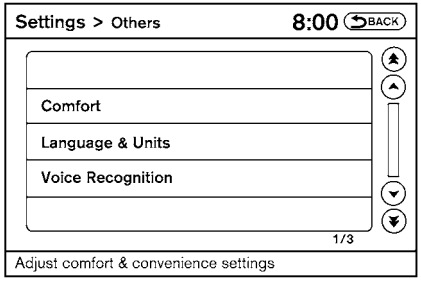

LHA1403

Activating Alternate Command Mode

1. Press the SETTING button on the instrument panel.
2. Select the “Others” key on the display.
3. Select the “Voice Recognition” key.

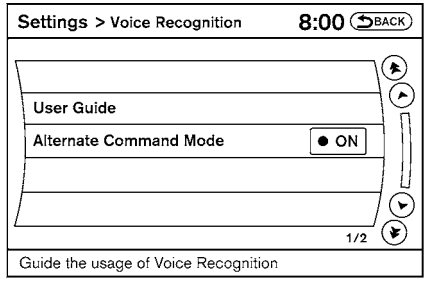

LHA1331

4. Select the “Alternate Command Mode” key.
5. The confirmation message is displayed on the screen. Select the “OK” key to activate the Alternate Command Mode.

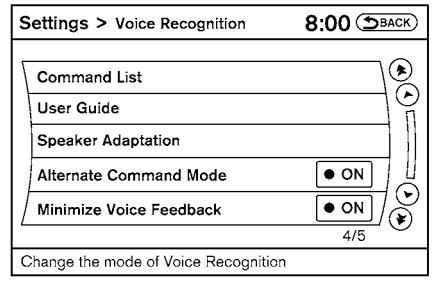

LHA1341

6. Alternate Command Mode is activated and the setting menu is expanded to include the Alternate Command Mode options. See “Settings menu” in this section for an explanation of the options.

Displaying the command list

If you are controlling the system by voice commands for the first time or do not know the appropriate voice command, perform the following procedure for displaying the voice command list (available only in Alternate Command Mode).

Press the switch, listen for the tone and say, “Help”. The system will respond by displaying the command list main menu.

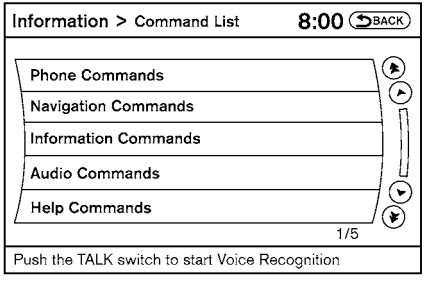

LHA1342

Only manual controls such as the touchscreen can navigate the command list menu.

As an alternative to the voice command “Help”, you may access the command list using the following steps:

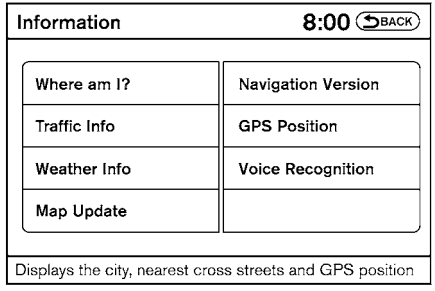

LHA1402

1. Press the INFO button on the instrument panel.
2. Select the “Voice Recognition” key.

NOTE:

You can skip steps 1 and 2 if you say “Help”.

3. Select the “Command List” key.

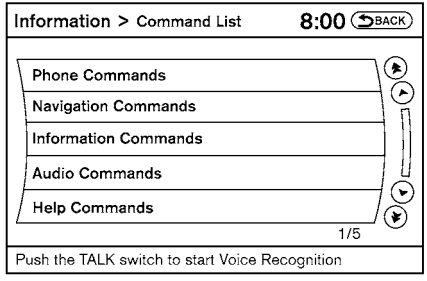

LHA1342

4. Select a category. The command list for the category selected is shown.
5. If necessary, scroll the screen to view the entire list.
6. Select the “Back” key to return to the previous screen.

Alternate Command Mode command list

Phone Command:

COMMAND	ACTION
Dial Number	Makes a call to a spoken phone number up to 10 digits.
Vehicle Phonebook	Makes a call to a contact in the vehicle phonebook.
Handset Phonebook	Makes a call to a contact in the handset phonebook.
International Call	Makes an international call by allowing more than 10 digits to be spoken, as well as star (*), pound (#), and plus (+).
Incoming Calls	Shows the last 5 incoming phone calls.
Outgoing Calls	Shows the last 5 outgoing phone calls.
Missed Calls	Shows the last 5 missed phone calls.

Navigation Command:

COMMAND	ACTION
Home	Sets a route to your home that is stored in the Address Book.
Address	Searches for a location by the street address specified, and sets a route (for continental US and Canada only).
Places	Sets a route to a facility near the current vehicle location.
Address Book	Displays the first 5 entries of the Address Book.
Previous Destinations	Sets a route to a previous destination.
Previous Start Point	Calculates a route to your previous starting point of the last route.
Minimize Freeway Route	Recalculates a route to the current destination while minimizing freeway usage.
Fastest Route	Recalculates a route to the current destination using the fastest estimated time.
Shortest Route	Recalculates a route to the current destination using the shortest distance.
Cancel Route	Cancels the current route.
Delete Destination	Deletes the current destination.
Birdview Map	Changes the Map display to Birdview.
Planview Map	Changes the Map display to a 2-dimensional view.
North Up	Changes the Map display to keep north pointing up on the screen.
Heading Up	Changes the Map display to keep the direction of the vehicle pointing up on the screen.
Zoom In <1 to 13>	Changes the map scale to a smaller number.
Zoom Out <1 to 13>	Changes the map scale to a larger number.
Guidance Voice ON/OFF	Turns the navigation voice guidance on or off.
Guide Voice Repeat	Repeats the last navigation voice guidance.

Information Command:

COMMAND	ACTION
Traffic Information	Turns the traffic information system on and off.
Where am I?	Displays the current vehicle location.
Weather Information	Displays weather information.
Weather Map	Displays the current weather map.

Audio Command:

COMMAND	ACTION
AM	Turns to the AM band, selecting the station last played.
FM	Turns to the FM band, selecting the station last played.
XM	Turns to the SAT band, selecting the station last played.
Music Box	Turns to the Music Box hard-disk drive audio system.
CD	Starts to play a CD.
USB	Turns to the USB audio input.
Bluetooth Audio	Turns to the Bluetooth® audio system.
AUX	Turns to the AUX input.

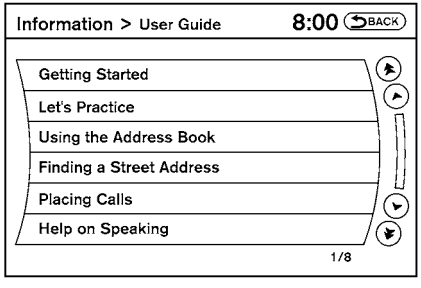

LHA1343

Displaying user guide

You can confirm how to use voice commands by accessing a simplified User Guide, which contains basic instructions and tutorials for several voice commands.

1. Press the INFO button on the instrument panel.
2. Select the “Voice Recognition” key.
3. Select the “User Guide” key.

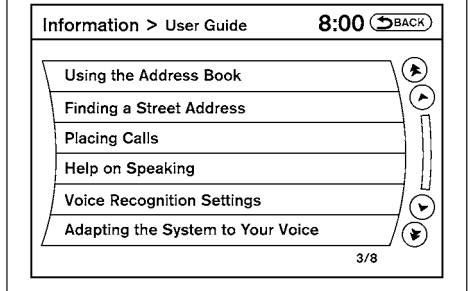

LHA1344

4. Select an item.

Available items:

- Getting Started

  Describes the basics of how to operate the Voice Recognition system.

- Let’s Practice

  Initiates a practice session that demonstrates how to improve recognition by the system.

- Using the Address Book

  Tutorial for using the Address Book.

- Finding a Street Address

  Tutorial for Finding a Street Address.

- Placing Calls

  Tutorial for making a phone call by voice command operation.

- Help on Speaking

  Displays useful tips for how to correctly speak commands in order for them to be properly recognized by the system.

- Voice Recognition Settings

  Describes the available Voice Recognition settings.

- Adapting the System to Your Voice

  Tutorial for adapting the system to your voice.

USING THE SYSTEM

Initialization

When the ignition switch is placed in the ON position, NISSAN Voice Recognition is initialized, which takes a few seconds. When completed, the system is ready to accept voice commands. If the switch is pressed before the initialization completes, the display will show the message: “System not ready.” or a beep sounds.

Before starting

To get the best performance from NISSAN Voice Recognition, observe the following:

- Keep the interior of the vehicle as quiet as possible. Close the windows to eliminate the surrounding noises (traffic noises, vibration sounds, etc.), which may prevent the system from recognizing the voice commands correctly.
- When the climate control is in the AUTO mode, the fan speed decreases automatically for easy recognition.
- Wait until a tone sounds before speaking a command.
- Speak in a natural voice without pausing between words.

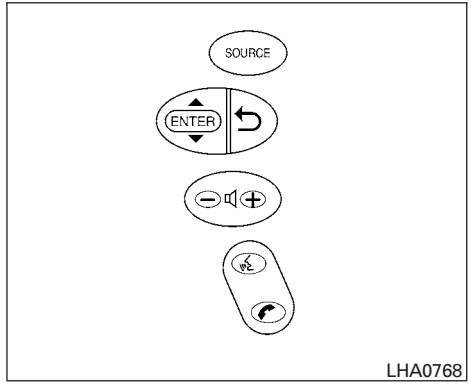

Giving voice commands

1. Press and release the switch located on the steering wheel.

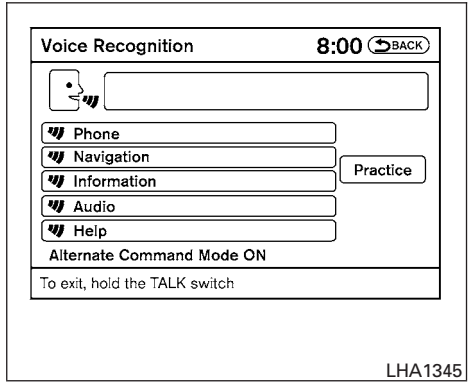

2. A list of commands appears on the screen, and the system announces, “Please say a command from the displayed list or say Help to show all commands.”
3. After the tone sounds and the icon on the screen changes from to , speak a command.
4. Once a command is recognized, the system will announce the recognized command and perform the requested action.

   If the command is not recognized, the system repeats the announcement. Repeat the command in a clear voice after the tone.

Operating tips

- Say a command after the tone. Voice commands cannot be accepted when the icon is .
- If the command is not recognized, the system repeats the announcement. Repeat the command in a clear voice.
- Press the switch on the steering wheel to return to the previous screen.
- If you want to cancel the command, press and hold the switch. The message, “Voice cancelled” will be announced.
- If you want to adjust the volume of the system feedback, push the volume control switch on the steering wheel or use the audio system volume knob while the system is making an announcement.
- To minimize the amount of prompts spoken by the system in Alternate Command Mode, use the Minimize Voice Feedback function. To access the Minimize Voice Feedback function press the SETTING button, then select the “Others” key. Then select the “Voice Recognition” key.

How to speak numbers

Voice Recognition requires a certain way to speak numbers when giving voice commands. Refer to the following examples.

General rule:

- Only single digits 0 (zero) to 9 can be used.
- When saying the phone number 800-662-6200, the system will accept “eight-hundred” in addition to “eight zero zero” or “eight oh oh”. 500, 700, and 900 are also supported.

Examples:

- 1-800-662-6200
  - “One eight zero zero six six two six two zero zero”
  - “One eight hundred six six two six two zero zero”

Improving Recognition of Phone numbers:

You can improve the recognition of phone numbers by saying the phone number in three groups of numbers. For example, when you try to call 800-662-6200, say “eight zero zero” first, and the system will then ask you for the next three digits. Then, say “six six two”. After recognition, the system will then ask for the last four digits. Say, “six two zero zero”. Using this method of phone digit entry can improve recognition performance.

NOTE:

When speaking a house number, speak the number “0” as “zero” or “oh”. If the letter “O” is included in the house number, it will not be recognized as “0” even if you speak “oh” instead of “zero”.

Settings menu

The content of the Settings Menu differs when the system is in the Alternate Command Mode.

Command List:

Displays the command list for Alternate Command Mode.

User Guide:

The user guide provides basic instructions for using Voice Recognition and accessing some voice commands.

NOTE:

The user guide can also be accessed from within the INFO menu after pressing the INFO button.

Speaker Adaptation:

Starts a system training procedure to learn the specific sounds of your voice. See “Speaker adaptation function” in this section.

Alternate Command Mode:

For advanced operation, an Alternate Command Mode is provided. This setting enables control of the Audio and Climate Control systems in addition to additional commands for the Phone and Navigation systems. With this setting active, the system does not announce or display the available commands at each step. When this mode is activated, the Voice Recognition Settings will change to show more options.

Minimize Voice Feedback:

Reduces the amount of the information spoken for each voice instruction.

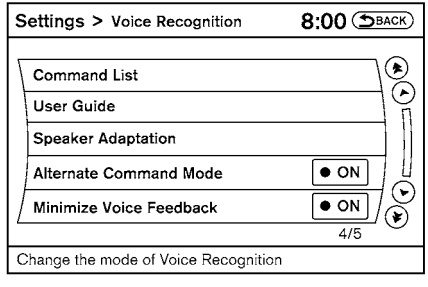

LHA1341

SPEAKER ADAPTATION FUNCTION

The Voice Recognition system has a function to learn the user’s voice for better voice recognition performance. The system can memorize the voices of up to three persons.

Having the system learn the user’s voice

1. Press the SETTING button on the instrument panel, select the “Others” key on the display.
2. Select the “Voice Recognition” key.
3. Select the “Speaker Adaptation” key.

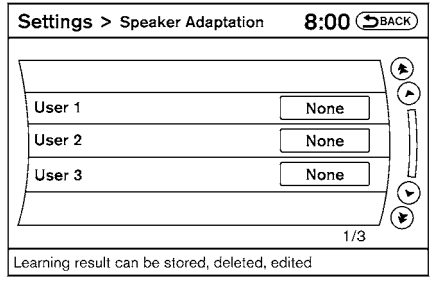

LHA1346

4. Select the user whose voice is to be memorized by the system.

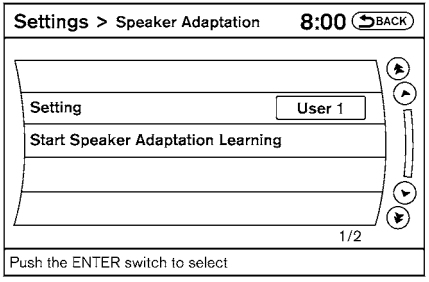

LHA1347

5. Select a category to be learned by the system from the following list:
   - Phone
   - Navigation
   - Information
   - Audio
   - Help

   The voice commands in the category are displayed.
6. Select a voice command to train.

   The Voice Recognition system starts.

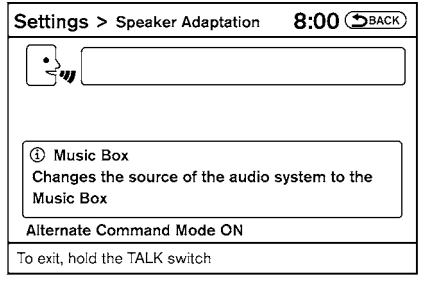

LHA1348

7. The system requests that you repeat a command after a tone. This command is also displayed on the screen.
8. After the tone sounds and the icon on the screen changes from to , speak the command that the system requested.
9. When the system has recognized the voice command, the voice of the user is learned.

Press the switch or select the “Back” key to return to the previous screen.

If the system has learned the command correctly, the voice command indicator on the screen turns on.

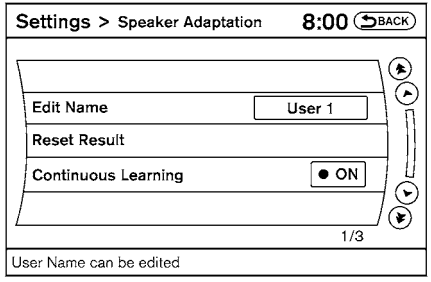

LHA1349

Speaker Adaptation function settings

Edit Name:

Edit the user name using the keypad displayed on the screen.

Reset Result:

Resets the user’s voice that the Voice Recognition system has learned.

Continuous Learning:

When this item is turned to ON, you can have the system learn the voice commands in succession, without selecting commands one by one.

TROUBLESHOOTING GUIDE

The system should respond correctly to all voice commands without difficulty. If problems are encountered, follow the solutions given in this guide for the appropriate error.

Where the solutions are listed by number, try each solution in turn, starting with number one, until the problem is resolved.

Symptom/error message	Solution
Displays “COMMAND NOT RECOGNIZED” or the system fails to interpret the command correctly.	1. Ensure that the command format is valid, see “Standard Mode command list” or “Alternate Command Mode command list” in this section. 2. Speak clearly using your normal speech pattern and at a level appropriate to the ambient noise level. 3. Ensure that the ambient noise level is not excessive, for example, windows open or defrost on. **NOTE:** **If it is too noisy to use the phone, it is likely that voice commands will not be recognized.**
The system consistently selects the wrong voicetag in the phonebook.	1. Ensure that the voicetag requested matches what was originally stored. See “Bluetooth® Hands-Free Phone System with Navigation System” in this section. 2. Replace one of the voicetags being confused with a different voicetag.

5 Starting and driving

Precautions when starting and driving 5-2
Exhaust gas (carbon monoxide) 5-2
Three-way catalyst 5-2
Tire Pressure Monitoring System (TPMS) 5-3
Avoiding collision and rollover 5-5
Off-road recovery 5-6
Rapid air pressure loss 5-6
Drinking alcohol/drugs and driving 5-7
Push-Button Ignition Switch 5-7
Push-button ignition switch positions 5-8
Emergency engine shut off 5-8
NISSAN Intelligent Key™ battery discharge 5-9
NISSAN vehicle immobilizer system 5-9
Before starting the engine 5-10
Starting the engine 5-10
Driving the vehicle 5-11
Continuously Variable Transmission (CVT) (if so equipped) 5-11
Manual transmission (if so equipped) 5-17
Parking brake 5-19
Cruise control 5-20
Precautions on cruise control 5-20
Cruise control operations 5-20
Break-in schedule 5-22
Increasing fuel economy 5-22
Parking/parking on hills 5-23
Power steering 5-24
Brake system 5-24
Brake precautions 5-24
Anti-lock Braking System (ABS) 5-25
Vehicle Dynamic Control (VDC) system 5-26
Cold weather driving 5-28
Freeing a frozen door lock 5-28
Anti-freeze 5-28
Battery 5-28
Draining of coolant water 5-28
Tire equipment 5-28
Special winter equipment 5-28
Driving on snow or ice 5-28
Engine block heater (if so equipped) 5-29

⚠ WARNING

- **Do not leave children or adults who would normally require the assistance of others alone in your vehicle. Pets should also not be left alone. They could accidentally injure themselves or others through inadvertent operation of the vehicle. Also, on hot, sunny days, temperatures in a closed vehicle could quickly become high enough to cause severe or possibly fatal injuries to people or animals.**
- **Closely supervise children when they are around cars to prevent them from playing and becoming locked in the trunk where they could be seriously injured. Keep the car locked, with the rear seatback and trunk lid securely latched when not in use, and prevent children's access to car keys.**

EXHAUST GAS (carbon monoxide)

⚠ WARNING

- **Do not breathe exhaust gases; they contain colorless and odorless carbon monoxide. Carbon monoxide is dangerous. It can cause unconsciousness or death.**
- **If you suspect that exhaust fumes are entering the vehicle, drive with all windows fully open, and have the vehicle inspected immediately.**
- **Do not run the engine in closed spaces such as a garage.**
- **Do not park the vehicle with the engine running for any extended length of time.**
- **Keep the trunk lid closed while driving, otherwise exhaust gases could be drawn into the passenger compartment. If you must drive with the trunk lid open, follow these precautions:**
  1. **Open all the windows.**
  2. **Set the air recirculation button to off and the fan control dial to high to circulate the air.**
- **If electrical wiring or other cable connections must pass to a trailer through the seal on the trunk lid or the body, follow the manufacturer's recommendation to prevent carbon monoxide entry into the vehicle.**
- **The exhaust system and body should be inspected by a qualified mechanic whenever:**
  a. **The vehicle is raised for service.**
  b. **You suspect that exhaust fumes are entering into the passenger compartment.**
  c. **You notice a change in the sound of the exhaust system.**
  d. **You have had an accident involving damage to the exhaust system, underbody, or rear of the vehicle.**

THREE-WAY CATALYST

The three-way catalyst is an emission control device installed in the exhaust system. Exhaust gases in the three-way catalyst are burned at high temperatures to help reduce pollutants.

⚠ WARNING

- **The exhaust gas and the exhaust system are very hot. Keep people, animals or flammable materials away from the exhaust system components.**
- **Do not stop or park the vehicle over flammable materials such as dry grass, waste paper or rags. They may ignite and cause a fire.**

⚠ CAUTION

- **Do not use leaded gasoline. Deposits from leaded gasoline will seriously reduce the three-way catalyst's ability to help reduce exhaust pollutants.**
- **Keep your engine tuned up. Malfunctions in the ignition, fuel injection, or electrical systems can cause overrich fuel flow into the three-way catalyst, causing it to overheat. Do not keep driving if the engine misfires, or if noticeable loss of performance or other unusual operating conditions are detected. Have the vehicle inspected promptly by a NISSAN dealer.**
- **Avoid driving with an extremely low fuel level. Running out of fuel could cause the engine to misfire, damaging the three-way catalyst.**
- **Do not race the engine while warming it up.**
- **Do not push or tow your vehicle to start the engine.**

TIRE PRESSURE MONITORING SYSTEM (TPMS)

Each tire, including the spare (if provided), should be checked monthly when cold and inflated to the inflation pressure recommended by the vehicle manufacturer on the vehicle placard or tire inflation pressure label. (If your vehicle has tires of a different size than the size indicated on the vehicle placard or tire inflation pressure label, you should determine the proper tire inflation pressure for those tires.)

As an added safety feature, your vehicle has been equipped with a tire pressure monitoring system (TPMS) that illuminates a low tire pressure telltale when one or more of your tires is significantly under-inflated. Accordingly, when the low tire pressure telltale illuminates, you should stop and check all 4 tires as soon as possible, and inflate them to the proper pressure. Driving on a significantly under-inflated tire causes the tire to overheat and can lead to tire failure. Under-inflation also reduces fuel efficiency and tire tread life, and may affect the vehicle's handling and stopping ability.

Please note that the TPMS is not a substitute for proper tire maintenance, and it is the driver's responsibility to maintain correct tire pressure, even if under-inflation has not reached the level to trigger illumination of the TPMS low tire pressure telltale.

Your vehicle has also been equipped with a TPMS malfunction indicator to indicate when the system is not operating properly. The TPMS malfunction indicator is combined with the low tire pressure telltale. When the system detects a malfunction, the telltale will flash for approximately one minute and then remain continuously illuminated. This sequence will continue upon subsequent vehicle start-ups as long as the malfunction exists. When the malfunction indicator is illuminated, the system may not be able to detect or signal low tire pressure as intended. TPMS malfunctions may occur for a variety of reasons, including the installation of replacement or alternate tires or wheels on the vehicle that prevent the TPMS from functioning properly. Always check the TPMS malfunction telltale after replacing one or more tires or wheels on your vehicle to ensure that the replacement or alternate tires and wheels allow the TPMS to continue to function properly.

Additional information:

- **The TPMS does not monitor the tire pressure of the spare tire.**
- The TPMS will activate only when the vehicle is driven at speeds above 16 MPH (25 km/h). Also, this system may not detect a sudden drop in tire pressure (for example a flat tire while driving).
- The low tire pressure warning light does not automatically turn off when the tire pressure is adjusted. After all 4 tires are inflated to the recommended pressure, the vehicle must be driven at speeds above 16 MPH (25 km/h) to activate the TPMS and turn off the low tire pressure warning light. Use a tire pressure gauge to check the tire pressure.
- The CHECK TIRE PRESSURE warning appears in the vehicle information display when the low tire pressure warning light is illuminated and low tire pressure is detected. The CHECK TIRE PRESSURE warning turns off when the low tire pressure warning light turns off.
- The CHECK TIRE PRESSURE warning does not appear if the low tire pressure warning light illuminates to indicate a TPMS malfunction.
- Tire pressure rises and falls depending on the heat caused by the vehicle's operation and the outside temperature. Low outside temperature can lower the temperature of the air inside the tire which can cause a lower tire inflation pressure. This may cause the low tire pressure warning light to illuminate. If the warning light illuminates in low ambient temperature, check the tire pressure for all four tires.
- The Tire and Loading Information label (also referred to as the vehicle placard or tire inflation pressure label) is located in the driver's door opening.

For additional information, see "Low tire pressure warning light" in the "Instruments and controls" section and "Tire Pressure Monitoring System (TPMS)" in the "In case of emergency" section.

⚠ WARNING

- **If the low tire pressure warning light illuminates while driving, avoid sudden steering maneuvers or abrupt braking, reduce vehicle speed, pull off the road to a safe location and stop the vehicle as soon as possible. Driving with underinflated tires may permanently damage the tires and increase the likelihood of tire failure. Serious vehicle damage could occur and may lead to an accident and could result in serious personal injury. Check the tire pressure for all four tires. Adjust the tire pressure to the recommended COLD tire pressure shown on the Tire and Loading Information label to turn the low tire pressure warning light OFF. If you have a flat tire, replace it with a spare tire as soon as possible. (See "Flat tire" in the "In case of emergency" section for changing a flat tire.)**
- **When a spare tire is mounted or a wheel is replaced, tire pressure will not be indicated, the TPMS will not function and the low tire pressure warning light will flash for approximately 1 minute. The light will remain on after 1 minute. Contact your NISSAN dealer as soon as possible for tire replacement and/or system resetting.**
- **Replacing tires with those not originally specified by NISSAN could affect the proper operation of the TPMS.**
- **Do not inject any tire liquid or aerosol tire sealant into the tires, as this may cause a malfunction of the tire pressure sensors.**

⚠ CAUTION

Do not place metalized film or any metal parts (antenna, etc.) on the windows. This may cause poor reception of the signals from the tire pressure sensors, and the TPMS will not function properly.

Some devices and transmitters may temporarily interfere with the operation of the TPMS and cause the low tire pressure warning light to illuminate.

Some examples are:

– Facilities or electric devices using similar radio frequencies are near the vehicle.

– If a transmitter set to similar frequencies is being used in or near the vehicle.

– If a computer (or similar equipment) or a DC/AC converter is being used in or near the vehicle.

FCC Notice:

For USA:

This device complies with Part 15 of the FCC Rules. Operation is subject to the following two conditions:

1. **This device may not cause harmful interference, and**
2. **This device must accept any interference received, including interference that may cause undesired operation. Note: Changes or modification not expressly approved by the party responsible for compliance could void the user's authority to operate the equipment.**

For Canada:

This device complies with RSS-210 of Industry Canada. Operation is subject to the following two conditions:

1. **This device may not cause interference, and**
2. **This device must accept any interference, include interference that may cause undesired operation of the device.**

AVOIDING COLLISION AND ROLLOVER

⚠ WARNING

Failure to operate this vehicle in a safe and prudent manner may result in loss of control or an accident.

Be alert and drive defensively at all times. Obey all traffic regulations. Avoid excessive speed, high speed cornering, or sudden steering maneuvers, because these driving practices could cause you to lose control of your vehicle. **As with any vehicle, loss of control could result in a collision with other vehicles or objects or cause the vehicle to roll over, particularly if the loss of control causes the vehicle to slide sideways.** Be attentive at all times, and avoid driving when tired. Never drive when under the influence of alcohol or drugs (including prescription or over-the-counter drugs which may cause drowsiness). Always wear your seat belt as outlined in the "Safety – Seats, seat belts and supplemental restraint system" section of this manual, and also instruct your passengers to do so.

Seat belts help reduce the risk of injury in collisions and rollovers. **In a rollover crash, an unbelted or improperly belted person is significantly more likely to be injured or killed than a person properly wearing a seat belt.**

OFF-ROAD RECOVERY

If the right side or left side wheels leave the road surface, maintain control of the vehicle by following the procedure below. Please note that this procedure is only a general guide. The vehicle must be driven as appropriate based on the conditions of the vehicle, road and traffic.

1. Remain calm and do not overreact.
2. Do not apply the brakes.
3. Maintain a firm grip on the steering wheel with both hands and try to hold a straight course.
4. When appropriate , slowly release the accelerator pedal to gradually slow the vehicle.
5. If there is nothing in the way, steer the vehicle to follow the road while vehicle speed is reduced. Do not attempt to drive the vehicle back onto the road surface until vehicle speed is reduced.
6. When it is safe to do so, gradually turn the steering wheel until both tires return to the road surface. When all tires are on the road surface, steer the vehicle to stay in the appropriate driving lane.

- If you decide that it is not safe to return the vehicle to the road surface based on vehicle, road or traffic conditions, gradually slow the vehicle to a stop in a safe place off the road.

RAPID AIR PRESSURE LOSS

Rapid air pressure loss or a “blow-out” can occur if the tire is punctured or is damaged due to hitting a curb or pothole. Rapid air pressure loss can also be caused by driving on under-inflated tires.

Rapid air pressure loss can affect the handling and stability of the vehicle, especially at highway speeds.

Help prevent rapid air pressure loss by maintaining the correct air pressure and visually inspect the tires for wear and damage. See “Wheels and tires” in the “Maintenance and do-it-yourself” section of this manual. If a tire rapidly loses air pressure or “blows-out” while driving, maintain control of the vehicle by following the procedure below. Please note that this procedure is only a general guide. The vehicle must be driven as appropriate based on the conditions of the vehicle, road and traffic.

⚠ WARNING

The following actions can increase the chance of losing control of the vehicle if there is a sudden loss of tire air pressure. Losing control of the vehicle may cause a collision and result in personal injury.

- **The vehicle generally moves or pulls in the direction of the flat tire.**
- **Do not rapidly apply the brakes.**
- **Do not rapidly release the accelerator pedal.**
- **Do not rapidly turn the steering wheel.**

1. Remain calm and do not over react.
2. Maintain a firm grip on the steering wheel with both hands and try to hold a straight course.
3. When appropriate, slowly release the accelerator pedal to gradually slow the vehicle.
4. Gradually steer the vehicle to a safe location off the road and away from traffic if possible.
5. Lightly apply the brake pedal to gradually stop the vehicle.
6. Turn on the hazard warning flashers and either contact a roadside emergency service to change the tire or see “Changing a flat tire” in the “In case of emergency” section of this manual.

DRINKING ALCOHOL/DRUGS AND DRIVING

⚠ WARNING

Never drive under the influence of alcohol or drugs. Alcohol in the bloodstream reduces coordination, delays reaction time and impairs judgement. Driving after drinking alcohol increases the likelihood of being involved in an accident injuring yourself and others. Additionally, if you are injured in an accident, alcohol can increase the severity of the injury.

NISSAN is committed to safe driving. However, you must choose not to drive under the influence of alcohol. Every year thousands of people are injured or killed in alcohol-related accidents. Although the local laws vary on what is considered to be legally intoxicated, the fact is that alcohol affects all people differently and most people underestimate the effects of alcohol.

Remember, drinking and driving don't mix! And that is true for drugs, too (over-the-counter, prescription, and illegal drugs). Don't drive if your ability to operate your vehicle is impaired by alcohol, drugs, or some other physical condition.

⚠ WARNING

Do not operate the push-button ignition switch while driving the vehicle except in an emergency. (The engine will stop when the ignition switch is pushed 3 consecutive times in quick succession or the ignition switch is pushed and held for more than 2 seconds.) If the engine stops while the vehicle is being driven, this could lead to a crash and serious injury.

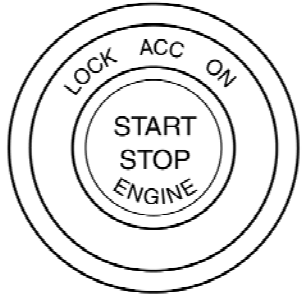

LSD2000

When the ignition switch is pushed without depressing the brake pedal (CVT) or the clutch pedal (M/T), the ignition switch position will illuminate as follows:

Push center

- once to change to ACC.
- two times to change to ON.
- three times to return to OFF.

The ignition switch will automatically return to the LOCK position when any door is either opened or closed with the switch in the OFF position.

The ignition lock is designed so that the ignition switch position cannot be switched to OFF until the shift selector is moved to the P (Park) position (CVT) or N (Neutral) position (M/T).

When the ignition switch cannot be pushed toward the OFF position, proceed as follows:

1. Move the shift selector into the P (Park) position (CVT) or N (Neutral) position (M/T).
2. Push the ignition switch. The ignition switch position will change to the ON position.
3. Push the ignition switch again to the OFF position.

The shift selector can be moved from the P (Park) position if the ignition switch is in the ON position and the brake pedal is depressed.

If the battery of the vehicle is discharged, the push-button ignition switch cannot be moved from the LOCK position.

Some indicators and warnings for operation are displayed on the vehicle information display. See "Vehicle information display" in the "Instruments and controls" section.

PUSH-BUTTON IGNITION SWITCH POSITIONS

LOCK (Normal parking position):

The ignition switch can only be locked in this position.

The ignition switch will be unlocked when it is pushed to the ACC position while carrying the Intelligent Key or with the Intelligent Key inserted in the port.

The ignition switch will lock when any door is opened or closed with the ignition switched off.

OFF:

The ignition switch is in the OFF position when the engine is turned off using the ignition switch. No lights will illuminate on the ignition switch.

ACC (Accessories):

This position activates electrical accessories, such as the radio, when the engine is not running.

ACC has a battery saver feature that will turn the ignition switch to the OFF position after 30 minutes under the following conditions:

- all doors are closed.
- shift selector is in P (Park).

The battery saver feature will be cancelled if any of the following occur:

- any door is opened.
- shift selector is moved out of the P (Park).
- ignition switch changes position.

ON (Normal operating position):

This position turns on the ignition system and electrical accessories.

⚠ CAUTION

Do not leave the vehicle with the ignition switch in ACC or ON positions when the engine is not running for an extended period. This can discharge the battery.

EMERGENCY ENGINE SHUT OFF

To shut off the engine in an emergency situation while driving perform the following procedure:

– Rapidly push the push-button ignition switch 3 consecutive times, or

– Push and hold the push-button ignition switch for more than 2 seconds.

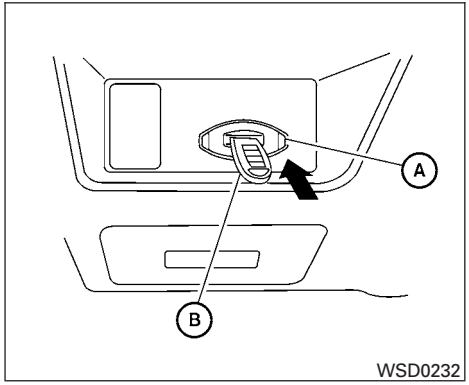

NISSAN INTELLIGENT KEY™ BATTERY DISCHARGE

If the battery of the Intelligent Key is almost discharged, the guide light Ⓐ of the Intelligent Key port blinks and the indicator appears on the vehicle information display. See “Vehicle information display” in the “Instruments and controls” section.

In this case, inserting the Intelligent Key into the port Ⓑ allows you to start the engine. Make sure the Intelligent Key is placed in the correct direction: The front side faces upward and the key ring side faces downward as illustrated.

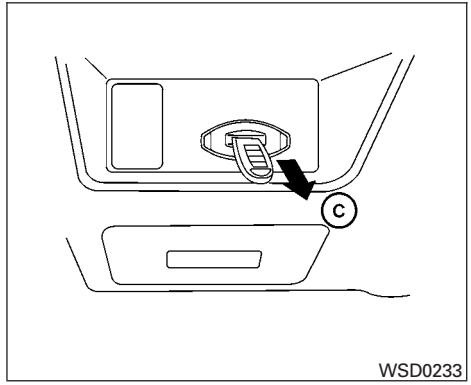

To remove the Intelligent Key from the port, push the ignition switch to the LOCK position and pull the Intelligent Key out of the port Ⓒ.

NOTE:

The Intelligent Key port does not charge the Intelligent Key battery. If you see the low battery indicator, replace the battery as soon as possible. See “Battery replacement” in the “Maintenance and do-it-yourself” section.

⚠CAUTION

- **Never place anything except the Intelligent Key in the Intelligent Key port. Doing so may cause damage to the equipment.**
- **Make sure the Intelligent Key is in the correct direction when inserting it to the Intelligent Key port. The engine may not start if it is in the wrong direction.**
- **Remove the Intelligent Key from the Intelligent Key port after the ignition switch is pushed to the LOCK position.**

NISSAN VEHICLE IMMOBILIZER SYSTEM

The NISSAN Vehicle Immobilizer system will not allow the engine to start without the use of the registered key.

If the engine fails to start using a registered key (for example, when interference is caused by another registered key, an automated toll road device or automatic payment device on the key ring), restart the engine using the following procedure:

1. Leave the ignition switch in the ON position for approximately 5 seconds.

2. Place the ignition switch in the OFF or LOCK position, and wait approximately 10 seconds.
3. Repeat steps 1 and 2.
4. Restart the engine while holding the device (which may have caused the interference) separate from the registered key.

If the no start condition re-occurs, NISSAN recommends placing the registered key on a separate key ring to avoid interference from other devices.

BEFORE STARTING THE ENGINE

- Make sure the area around the vehicle is clear.
- Check fluid levels such as engine oil, coolant, brake fluid, and windshield-washer fluid as frequently as possible, or at least whenever you refuel.
- Check that all windows and lights are clean.
- Visually inspect tires for their appearance and condition. Also check tires for proper inflation.
- Lock all doors.
- Position seat and adjust head restraints.
- Adjust inside and outside mirrors.
- Fasten seat belts and ask all passengers to do likewise.
- Check the operation of warning lights when the ignition switch is pushed to the ON position. See “Warning/indicator lights and audible reminders” in the “Instruments and controls” section of this manual.

STARTING THE ENGINE

1. Apply the parking brake.
2. **Continuously Variable Transmission (CVT) model:**

   Move the shift selector to P (Park) or N (Neutral). P (Park) is recommended.

   The starter is designed not to operate if the shift selector is in any of the driving positions.

   Manual transmission (M/T) model:

   Move the shift selector to N (Neutral). Depress the clutch pedal to the floor.

   The starter is designed not to operate unless the clutch pedal is fully depressed.
3. Push the ignition switch to the ON position. Depress the brake pedal and the clutch pedal (if so equipped) and push the ignition switch to start the engine.

   To start the engine immediately, push and release the ignition switch while depressing the brake pedal with the ignition switch in any position.

- If the engine is very hard to start in extremely cold weather or when restarting, depress the accelerator pedal a little (approximately 1/3 to the floor) and while holding, crank the engine. Release the accelerator pedal when the engine starts.
- If the engine is very hard to start because it is flooded, depress the accelerator pedal all the way to the floor and hold it. Push the ignition switch to the ON position to start cranking the engine. After 5 or 6 seconds, stop cranking by pushing the ignition switch to LOCK. After cranking the engine, release the accelerator pedal. Crank the engine with your foot off the accelerator pedal by depressing the brake pedal and pushing the push-button ignition switch to start the engine. If the engine starts, but fails to run, repeat the above procedure.

⚠ CAUTION

Do not operate the starter for more than 15 seconds at a time. If the engine does not start, push the ignition switch to the OFF position and wait 10 seconds before cranking again, otherwise the starter could be damaged.

4. **Warm-up**

   Allow the engine to idle for at least 30 seconds after starting. Do not race the engine while warming it up. Drive at moderate speed for a short distance first, especially in cold weather. In cold weather, keep the engine running for a minimum of 2 - 3 minutes before shutting it off. Starting and stopping the engine over a short period of time may make the vehicle more difficult to start.

5. To stop the engine, shift the shift selector to the P (Park) position (CVT) or to N (Neutral) and apply the parking brake (M/T) and push the ignition switch to the OFF position.

CONTINUOUSLY VARIABLE TRANSMISSION (CVT) (if so equipped)

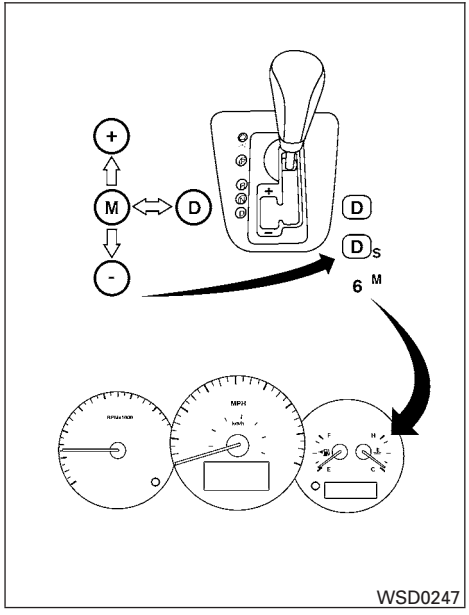

WSD0247

⚠ WARNING

- **Do not depress the accelerator pedal while shifting from P (Park) or N (Neutral) to R (Reverse), D (Drive), Ds (Drive Sport) or (M) Manual shift mode. Always depress the brake pedal until shifting is completed. Failure to do so could cause you to lose control and have an accident.**
- **Cold engine idle speed is high, so use caution when shifting into a forward or reverse gear before the engine has warmed up.**
- **Do not downshift abruptly on slippery roads. This may cause a loss of control.**
- **Never shift to P (Park) or R (Reverse) while the vehicle is moving. This could cause an accident.**

⚠ CAUTION

When stopping the vehicle on an uphill grade, do not hold the vehicle by depressing the accelerator pedal. The foot brake should be used for this purpose.

The CVT in your vehicle is electronically controlled to produce maximum power and smooth operation.

The CVT can operate in two different automatic drive modes:

- D (Drive) mode - Move the shift selector to D (Drive), the transmission is in the normal forward automatic driving mode. The position indicator in the meter shows a “D”. The D (Drive) mode does not produce a gear change sensation like a traditional automatic transmission.
- Ds (Drive Sport) mode - Move the shift selector over from D (Drive) to the left into the manual shift gate. The position indicator in the meter shows a “Ds”. In Ds (Drive Sport) mode, transmission operation changes to ″Sporty” driving shift operation, creating a more aggressive acceleration feeling than the D (Drive) mode and a gear change sensation when the driver accelerates quickly. When the driver selects M (Manual) mode ratio with shift selector during Ds (Drive Sport) mode operation, the driver must move the shift selector from Ds mode to D mode and back again to re-select Ds (Drive Sport) mode.
- To cancel the Ds mode, return the shift selector to the D (Drive) position. The transmission returns to the automatic drive mode.

The CVT can operate in a manual drive mode:

- M (Manual) mode - With the shift selector in the manual shift gate Ds (Drive Sport) mode, M (Manual) mode can be selected by moving the shift selector up (+) or down (–). In M mode, the transmission will produce noticeable upshifts and downshifts. The position indicator in the meter shows a “M”.

Follow these procedures for maximum vehicle performance and driving enjoyment.

NOTE:

Engine power may be automatically reduced to protect the CVT if the engine speed increases quickly when driving on slippery roads or while being tested on some dynamometers.

Starting the vehicle

1. After starting the engine, fully depress the foot brake pedal before moving the shift selector out of the P (Park) position.
2. Keep the foot brake pedal depressed and move the shift selector into a driving gear.
3. Release the foot brake, then gradually start the vehicle in motion.
4. Stop the vehicle completely before shifting the shift selector to the P (Park) position.

The CVT is designed so the foot brake pedal MUST be depressed before shifting from P (Park) to any drive position while the ignition switch is in the ON position.

The shift selector cannot be moved out of P (Park) and into any of the other gear positions if the ignition switch is pushed to the LOCK position.

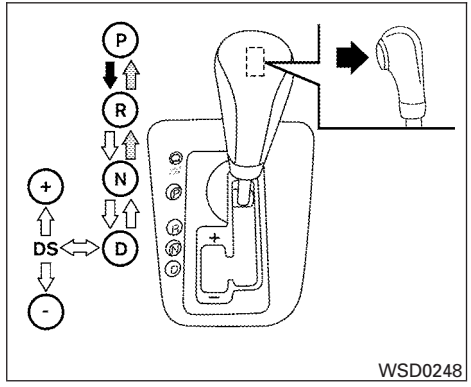

To move the shift selector:

Press the button while depressing the brake pedal

Press the button to shift

Shift without pressing button

Shifting

After starting the engine, fully depress the brake pedal and move the shift selector from P (Park) to any of the desired shift positions.

⚠ WARNING

Apply the parking brake if the shift selector is in any position while the engine is not running. Failure to do so could cause the vehicle to move unexpectedly or roll away and result in serious personal injury or property damage.

P (Park):

⚠ CAUTION

To prevent transmission damage, use the P (Park) or R (Reverse) position only when the vehicle is completely stopped.

Use the P (Park) shift selector position when the vehicle is parked or when starting the engine. Make sure the vehicle is completely stopped. **The brake pedal should be depressed to move the shift selector from N (Neutral) or any drive position to P (Park).** Apply the parking brake. When parking on a hill, apply the parking brake first, then move the shift selector into the P (Park) position.

R (Reverse):

⚠ CAUTION

To prevent transmission damage, use the P (Park) or R (Reverse) position only when the vehicle is completely stopped.

Use the R (Reverse) position to back up. Make sure the vehicle is completely stopped before selecting the R (Reverse) position. **The brake pedal must be depressed to move the shift selector from P (Park), N (Neutral) or any drive position to R (Reverse).**

N (Neutral):

Neither forward nor reverse gear is engaged. The engine can be started in this position. You may shift to N (Neutral) and restart a stalled engine while the vehicle is moving.

D (Drive):

Use this position for all normal forward driving.

DS (Drive Sport):

When the shift selector is shifted from the D (Drive) position to the manual shift gate, the transmission enters the DS (Drive Sport) mode. Moving the shift selector to the DS (Drive Sport) position allows you to enjoy “sporty” driving shift operation on a winding road and feel smooth acceleration or deceleration on a hilly road by moving in a lower gear automatically. When canceling the DS mode, return the shift selector to the D (Drive) position. The transmission returns to the normal driving mode.

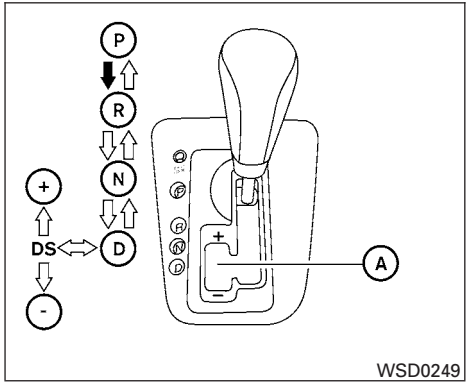

Manual shift mode (if so equipped)

When the shift selector is in the Ds (Drive Sport) position, the transmission is ready for the manual shift mode. Shift ranges can be selected manually by moving the shift selector up (+) or down (–). To cancel the Ds mode, return shift selector to the D (Drive) position. The transmission returns to automatic driving mode.

When the shift selector is shifted from D (Drive) to the manual shift gate Ⓐ with the vehicle stopped or while driving, the transmission enters the manual shift mode. Shift ranges can be selected manually. In the manual shift mode, the shift range is displayed on the position indicator in the meter. When shifting the shift selector to the manual shift gate, the position indicator displays 1 (first) up to 6 (sixth) depending on vehicle speed.

Shift ranges up or down one by one as follows:

1⇔ 2 ⇔ 3 ⇔ 4 ⇔ 5 ⇔ 6

M6 (6th):

Use this position for all normal forward driving at highway speeds.

M5 (5th):

Use this position when driving up long slopes, or for engine braking when driving down long slopes.

M4 (4th), M3 (3rd) and M2 (2nd):

Use for hill climbing or engine braking on downhill grades.

M1 (1st):

Use this position when climbing steep hills slowly or driving slowly through deep snow, sand or mud, or for maximum engine braking on steep downhill grades.

- Remember not to drive at high speeds for extended periods of time in lower than 6 range. This reduces fuel economy.

When shifting up:

Move the shift selector to the + (up) side. (Shifts to higher range.)

When shifting down:

Move the shift selector to the – (down) side. (Shifts to lower range.)

- The transmission will automatically downshift the gears. (For example, if you select the 3rd range, the transmission will shift down between the 3rd and 1st gears.)
- Moving the shift selector rapidly to the same side twice will shift the ranges in succession.

When canceling the manual shift mode:

Return the shift selector to the D (Drive) position to return the transmission to the normal driving mode.

- **In the manual shift mode, the transmission may not shift to the selected gear. This helps maintain driving performance and reduces the chance of vehicle damage or loss of control.**

- **In the manual shift mode, the transmission may shift up automatically to a higher range than selected if the engine speed is too high. When the vehicle speed decreases, the transmission automatically shifts down and shifts to 1st gear before the vehicle comes to a stop.**
- CVT operation is limited to automatic drive mode when CVT fluid temperature is extremely low even if manual shift mode is selected. This is not a malfunction. When CVT fluid warms up, manual mode can be selected.
- When the CVT fluid temperature is high, the shift range may upshift in lower rpm than usual. This is not a malfunction.

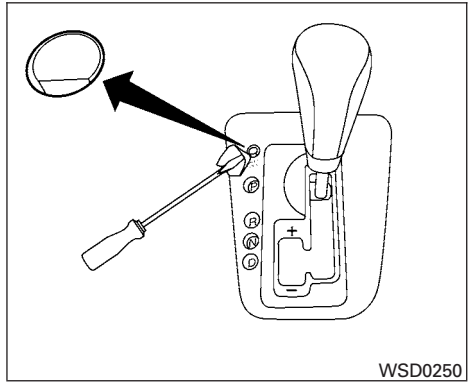

Shift lock release

If the battery charge is low or discharged, the shift selector may not be moved from the P (Park) position even with the brake pedal depressed and the shift selector button pushed.

It will be necessary to jump start or have your battery charged, see “Jump starting” in the “In case of emergency” section. Contact your NISSAN dealer or a professional towing service.

To move the shift selector, complete the following procedure:

1. Push the ignition switch to the LOCK position.
2. Apply the parking brake.
3. Using a protective cloth on the tip of a 3 mm screwdriver, remove the shift lock release cover.
   - If available, a plastic trim tool can also be used.
4. Insert the small screwdriver in the shift lock release slot and push down.
5. Move the shift selector to the N (Neutral) position while holding down the shift lock release.

If the shift selector cannot be moved out of P (Park), have a NISSAN dealer check the transmission as soon as possible.

⚠ WARNING

If the shift selector cannot be moved from the P (Park) position while the engine is running and the brake pedal is depressed, the stop lights may not work. Malfunctioning stop lights could cause an accident injuring yourself and others.

Accelerator downshift — in D position —

For passing or hill climbing, depress the accelerator pedal to the floor. This shifts the transmission down into a lower gear, depending on the vehicle speed.

High fluid temperature protection mode

This transmission has a high fluid temperature protection mode. If the fluid temperature becomes too high (for example, when climbing steep grades in high temperature with heavy loads, such as when towing a trailer), engine power and, under some conditions, vehicle speed will be decreased automatically to reduce the chance of transmission damage. Vehicle speed can be controlled with the accelerator pedal, but the engine and vehicle speed may be limited.

Fail-safe

If the vehicle is driven under extreme conditions, such as excessive wheel spinning and subsequent hard braking, the fail-safe system may be activated. The MIL may come on to indicate the fail-safe mode is activated, see "Malfunction Indicator Light (MIL)" in the "Instrument and controls" section. This will occur even if all electrical circuits are functioning properly. In this case, place the ignition switch in the OFF position and wait for 10 seconds. Then push the switch back to the ON position. The vehicle should return to its normal operating condition. If it does not return to its normal operating condition, have a NISSAN dealer check the transmission and repair if necessary.

⚠ WARNING

When the high fluid temperature protection mode or fail-safe operation occurs, vehicle speed may be gradually reduced. The reduced speed may be lower than other traffic, which could increase the chance of a collision. Be especially careful when driving. If necessary, pull to the side of the road at a safe place and allow the transmission to return to normal operation, or have it repaired if necessary.

MANUAL TRANSMISSION (if so equipped)

⚠ WARNING

- **Do not downshift abruptly on slippery roads. This may cause a loss of control.**
- **Do not over-rev the engine when shifting to a lower gear. This may cause a loss of control or engine damage.**

⚠ CAUTION

- **Do not rest your foot on the clutch pedal while driving. This may cause clutch damage.**
- **Fully depress the clutch pedal before shifting to help prevent transmission damage.**
- **Stop your vehicle completely before shifting into R (Reverse).**
- **When the vehicle is stopped with the engine running (for example, at a stop light), shift to N (Neutral) and release the clutch pedal with the foot brake applied.**

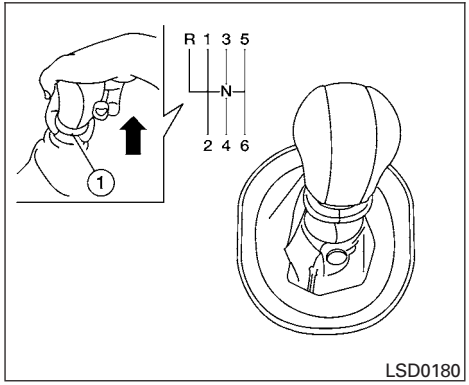

Shifting

To change gears or when upshifting or downshifting, depress the clutch pedal fully, shift into the appropriate gear, then release the clutch slowly and smoothly.

To ensure smooth gear changes, fully depress the clutch pedal before operating the shift selector. If the clutch pedal is not fully depressed before the transmission is shifted, a gear noise may be heard. Transmission damage may occur.

Start the vehicle in 1st gear and shift to 2nd, 3rd, 4th and 5th up to 6th gear in sequence according to vehicle speed.

To back up, lift up on the shift selector ring ① and then move it to the R (Reverse) position after stopping the vehicle completely.

The shift selector ring ① returns to its original position when the shift selector is moved to the N (Neutral) position.

If it is difficult to move the shift selector into R (Reverse) or 1 (1st), shift into N (Neutral), then release the clutch pedal. Depress the clutch pedal again and shift into R (Reverse) or 1 (1st).

Suggested up-shift speeds

The following are suggested vehicle speeds for shifting into a higher gear. These suggestions relate to fuel economy and vehicle performance. Actual upshift speeds will vary according to road conditions, the weather and individual driving habits.

For normal acceleration in low altitude areas (less than 4,000 ft [1219 m]):

For QR25DE:

GEAR CHANGE	MPH (km/h)
1st to 2nd	8 (24)
2nd to 3rd	17 (27)
3rd to 4th	25 (40)
4th to 5th	36 (58)
5th to 6th	51 (82)

For VQ35DE:

GEAR CHANGE	MPH (km/h)
1st to 2nd	9 (14)
2nd to 3rd	19 (30)
3rd to 4th	26 (42)
4th to 5th	31 (50)
5th to 6th	37 (59)

For acceleration in high altitude areas (over 4,000 ft [1219 m]):

For QR25DE:

Gear change	MPH (km/h)
1st to 2nd	8 (13)
2nd to 3rd	17 (27)
3rd to 4th	25 (40)
4th to 5th	36 (58)
5th to 6th	51 (82)

For VQ35DE:

Gear change	MPH (km/h)
1st to 2nd	15 (24)
2nd to 3rd	25 (40)
3rd to 4th	40 (64)
4th to 5th	45 (72)
5th to 6th	50 (80)

Suggested maximum speed in each gear

Downshift to a lower gear if the engine is not running smoothly, or if you need to accelerate.

Do not exceed the maximum suggested speed (shown below) in any gear. For level road driving, use the highest gear suggested for that speed. Always observe posted speed limits, and drive according to the road conditions, which will ensure safe operation. Do not over-rev the engine when shifting to a lower gear as it may cause engine damage or loss of vehicle control.

GEAR	QR25DE MPH (km/h)	VQ35DE MPH (km/h)
1st	32 (53)	36 (58)
2nd	59 (95)	58 (93)
3rd	82 (133)	81 (131)
4th	—	—
5th	—	—
6th	—	—

WARNING

- **Be sure the parking brake is fully released before driving. Failure to do so can cause brake failure and lead to an accident.**
- **Do not release the parking brake from outside the vehicle.**
- **Do not use the shift selector in place of the parking brake. When parking, be sure the parking brake is fully engaged.**
- **Do not leave children unattended in a vehicle. They could release the parking brake and cause an accident.**

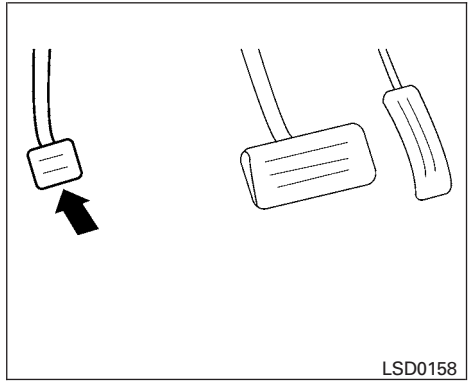

Type A

To engage: Type A, firmly depress the parking brake. Type B, pull the lever up Ⓐ.

To release:

1. Firmly apply the foot brake.
2. **Manual transmission models:**

   Place the shift selector in the N (Neutral) position.

   CVT models:

   Move the shift selector to the P (Park) position.

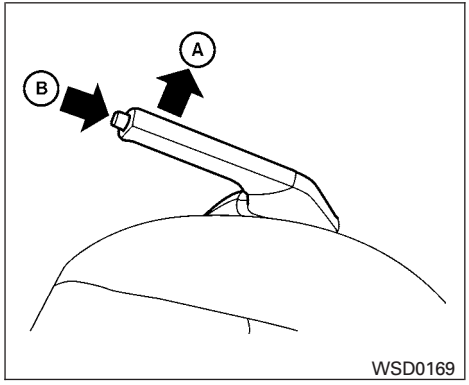

Type B

3. Type A, firmly depress the parking brake pedal and it will release. Type B, while pulling up on the parking brake lever slightly, push the button and lower completely Ⓑ.
4. Before driving, be sure the brake warning light goes out.

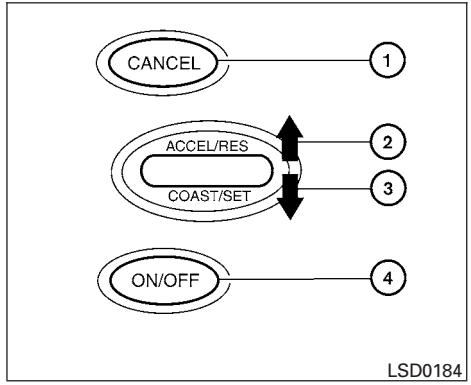

1. CANCEL switch
2. ACCEL/RES switch
3. COAST/SET switch
4. ON/OFF switch

PRECAUTIONS ON CRUISE CONTROL

- If the cruise control system malfunctions, it cancels automatically. The SET indicator light in the instrument panel then blinks to warn the driver.
- If the SET indicator light blinks, turn the cruise control switch off and have the system checked by a NISSAN dealer.
- The SET indicator light may blink when the cruise control switch is turned ON while pushing the ACCEL/RES, COAST/SET, or CANCEL switch. To properly set the cruise control system, use the following procedures.

⚠ WARNING

Do not use the cruise control when driving under the following conditions:

- **When it is not possible to keep the vehicle at a set speed.**
- **In heavy traffic or in traffic that varies in speed.**
- **On winding or hilly roads.**
- **On slippery roads (rain, snow, ice, etc.).**
- **In very windy areas.**

Doing so could cause a loss of vehicle control and result in an accident.

CRUISE CONTROL OPERATIONS

The cruise control allows driving at a speed between 25 - 89 MPH (40 - 144 km/h) without keeping your foot on the accelerator pedal.

To turn on the cruise control, push the ON·OFF switch. The CRUISE indicator light in the instrument panel comes on.

To set cruising speed, accelerate the vehicle to the desired speed, push the COAST/SET switch and release it. The SET indicator light in the instrument panel comes on. Take your foot off the accelerator pedal. Your vehicle maintains the set speed.

- **To pass another vehicle,** depress the accelerator pedal. When you release the pedal, the vehicle returns to the previously set speed.
- The vehicle may not maintain the set speed when going up or down steep hills. If this happens, drive without the cruise control.

To cancel the preset speed, use one of the following three methods.

- Push the CANCEL button; the SET indicator light in the instrument panel goes out.
- Tap the brake pedal; the SET indicator light goes out.
- Push the ON·OFF switch off. Both the CRUISE indicator light and SET indicator light in the instrument panel go out.

The cruise control is automatically canceled and the SET light in the instrument panel goes out if:

- you depress the brake or clutch pedal while pushing the ACCEL/RES or SET/COAST switch. The preset speed is deleted from memory.
- the vehicle slows down more than 8 MPH (13 km/h) below the set speed.
- you depress the clutch pedal (manual transmission), or move the shift selector to N (Neutral) (CVT).

To reset at a faster cruising speed, use one of the following three methods.

- Depress the accelerator pedal. When the vehicle attains the desired speed, push and release the COAST/SET switch.
- Push and hold the ACCEL/RES switch. When the vehicle attains the speed you desire, release the switch.
- Push and release the ACCEL/RES switch. Each time you do this, the set speed increases by about 1 MPH (1.6 km/h).

To reset at a slower cruising speed, use one of the following three methods.

- Lightly tap the brake pedal. When the vehicle attains the desired speed, push the COAST/SET switch and release it.
- Push and hold the COAST/SET switch. Release the switch when the vehicle slows to the desired speed.
- Push and release the COAST/SET switch. Each time you do this, the set speed decreases by about 1 MPH (1.6 km/h).

To resume the preset speed, push and release the ACCEL/RES switch. The vehicle returns to the last set cruising speed when the vehicle speed is over 25 MPH (40 km/h).

BREAK-IN SCHEDULE

⚠ CAUTION

During the first 1,200 miles (2,000 km), follow these recommendations to obtain maximum engine performance and ensure the future reliability and economy of your new vehicle. Failure to follow these recommendations may result in shortened engine life and reduced engine performance.

- Avoid driving for long periods at constant speed, either fast or slow, and do not run the engine over 4,000 rpm.
- Do not accelerate at full throttle in any gear.
- Avoid quick starts.
- Avoid hard braking as much as possible.
- Do not tow a trailer for the first 500 miles (800 km). Your engine, axle or other parts could be damaged.

INCREASING FUEL ECONOMY

- Accelerate slowly and smoothly. Maintain cruising speeds with a constant accelerator position.
- Drive at moderate speeds on the highway. Driving at high speed lowers fuel economy.
- Avoid unnecessary stopping and braking. Maintain a safe distance behind other vehicles.
- Use a proper gear range which suits road conditions. On level roads, shift into high gear as soon as possible.
- Avoid unnecessary engine idling.
- Keep your engine tuned up.
- Follow the recommended periodic maintenance schedule.
- Keep the tires inflated to the correct pressure. Low tire pressure increases tire wear and lowers fuel economy.
- Keep the wheels in correct alignment. Improper alignment increases tire wear and lowers fuel economy.
- Air conditioner operation lowers fuel economy. Use the air conditioner only when necessary.
- When cruising at highway speeds, it is more economical to use the air conditioner and leave the windows closed to reduce drag.
- Use the recommended viscosity engine oil. See “Capacities and recommended fuel/lubricants” in the “Technical and consumer information” section of this manual.

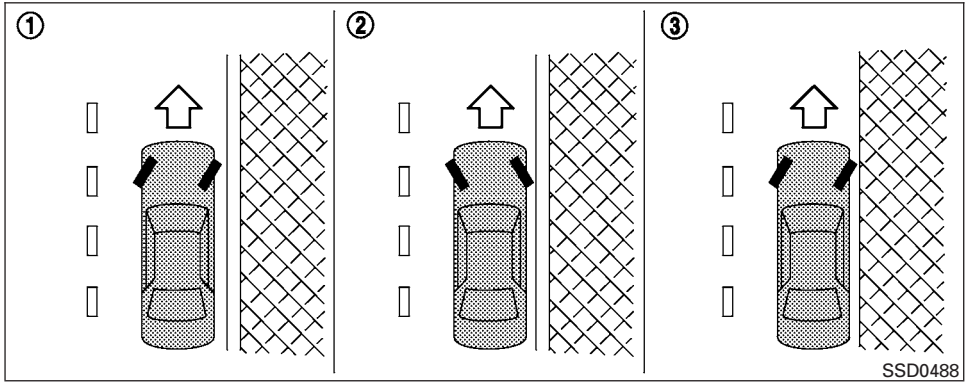

⚠ WARNING

- **Do not stop or park the vehicle over flammable materials such as dry grass, waste paper or rags. They may ignite and cause a fire.**
- **Safe parking procedures require that both the parking brake be set and the transmission placed into P (Park) for CVT models or in an appropriate gear for manual transmission models. Failure to do so could cause the vehicle to move unexpectedly or roll away and result in an accident. Make sure the shift selector has been pushed as far forward as it can go and cannot be moved without depressing the foot brake pedal.**
- **Never leave the engine running while the vehicle is unattended.**
- **Do not leave children unattended inside the vehicle. They could unknowingly activate switches or controls. Unattended children could become involved in serious accidents.**

1. Firmly apply the parking brake.
2. **Manual transmission models:**

   Place the shift selector in the R (Reverse) position. When parking on an uphill grade, place the shift selector in 1st gear.

   Continuously Variable Transmission (CVT) models:

   Move the shift selector to the P (Park) position.
3. To help prevent the vehicle from rolling into traffic when parked on an incline, it is a good practice to turn the wheels as illustrated.

- HEADED DOWNHILL WITH CURB: ①

  Turn the wheels into the curb and move the vehicle forward until the curb side wheel gently touches the curb.
- HEADED UPHILL WITH CURB: ②

  Turn the wheels away from the curb and move the vehicle back until the curb side wheel gently touches the curb.
- HEADED UPHILL OR DOWNHILL, NO CURB: ③

  Turn the wheels toward the side of the road so the vehicle will move away from the center of the road if it moves.

4. Place the ignition switch in the LOCK position and remove the key.

POWER STEERING

The power assisted steering uses a hydraulic pump, driven by the engine, to assist steering.

If the engine stops or the drive belt breaks, you will still have control of the vehicle. However, much greater steering effort is needed, especially in sharp turns and at low speeds.

⚠ WARNING

If the engine is not running or is turned off while driving, the power assist for the steering will not work. Steering will be harder to operate.

BRAKE SYSTEM

The brake system has two separate hydraulic circuits. If one circuit malfunctions, you will still have braking at 2 wheels.

BRAKE PRECAUTIONS

Vacuum assisted brakes

The brake booster aids braking by using engine vacuum. If the engine stops, you can stop the vehicle by depressing the brake pedal. However, greater foot pressure on the brake pedal will be required to stop the vehicle and stopping distance will be longer.

Using the brakes

Avoid resting your foot on the brake pedal while driving. This will overheat the brakes, wear out the brake pads faster, and reduce gas mileage.

To help reduce brake wear and to prevent the brakes from overheating, reduce speed and downshift to a lower gear before going down a slope or long grade. Overheated brakes may reduce braking performance and could result in loss of vehicle control.

⚠ WARNING

- **While driving on a slippery surface, be careful when braking, accelerating or downshifting. Abrupt braking or accelerating could cause the wheels to skid and result in an accident.**
- **If the engine is not running or is turned off while driving, the power assist for the brakes will not work. Braking will be harder.**

Parking brake break-in

Break-in the parking brake shoes whenever the stopping effect of the parking brake is weakened or whenever the parking brake shoes and/or drum/rotors are replaced, in order to assure the best brake performance.

This procedure is described in the vehicle service manual and can be performed by a NISSAN dealer.

Wet brakes

When the vehicle is washed or driven through water, the brakes may get wet. As a result, your braking distance will be longer and the vehicle may pull to one side during braking.

To dry the brakes, drive the vehicle at a safe speed while lightly pressing the brake pedal to heat up the brakes. Do this until the brakes return to normal. Avoid driving the vehicle at high speeds until the brakes function correctly.

ANTI-LOCK BRAKING SYSTEM (ABS)

⚠ WARNING

- **The Anti-lock Braking System (ABS) is a sophisticated device, but it cannot prevent accidents resulting from careless or dangerous driving techniques. It can help maintain vehicle control during braking on slippery surfaces. Remember that stopping distances on slippery surfaces will be longer than on normal surfaces even with ABS. Stopping distances may also be longer on rough, gravel or snow covered roads, or if you are using tire chains. Always maintain a safe distance from the vehicle in front of you. Ultimately, the driver is responsible for safety.**
- **Tire type and condition may also affect braking effectiveness.**
  - **When replacing tires, install the specified size of tires on all four wheels.**
  - **When installing a spare tire, make sure that it is the proper size and type as specified on the Tire and Loading Information label. See "Tire and Loading Information label" in the "Technical and consumer information" section of this manual.**
  - **For detailed information, see "Wheels and tires" in the "Maintenance and do-it-yourself" section of this manual.**

The Anti-lock Braking System (ABS) controls the brakes so the wheels do not lock during hard braking or when braking on slippery surfaces. The system detects the rotation speed at each wheel and varies the brake fluid pressure to prevent each wheel from locking and sliding. By preventing each wheel from locking, the system helps the driver maintain steering control and helps to minimize swerving and spinning on slippery surfaces.

Using the system

Depress the brake pedal and hold it down. Depress the brake pedal with firm steady pressure, but do not pump the brakes. The ABS will operate to prevent the wheels from locking up. Steer the vehicle to avoid obstacles.

⚠ WARNING

Do not pump the brake pedal. Doing so may result in increased stopping distances.

Self-test feature

The ABS includes electronic sensors, electric pumps, hydraulic solenoids and a computer. The computer has a built-in diagnostic feature that tests the system each time you start the engine and move the vehicle at a low speed in forward or reverse. When the self-test occurs, you may hear a "clunk" noise and/or feel a pulsation in the brake pedal. This is normal and does not indicate a malfunction. If the computer senses a malfunction, it switches the ABS off and illuminates the ABS warning light on the instrument panel. The brake system then operates normally, but without anti-lock assistance.

If the ABS warning light illuminates during the self-test or while driving, have the vehicle checked by a NISSAN dealer.

Normal operation

The ABS operates at speeds above 3 - 6 MPH (5 - 10 km/h). The speed varies according to road conditions.

When the ABS senses that 1 or more wheels are close to locking up, the actuator rapidly applies and releases hydraulic pressure. This action is similar to pumping the brakes very quickly. You may feel a pulsation in the brake pedal and hear a noise from under the hood or feel a vibration from the actuator when it is operating. This is normal and indicates that the ABS is operating properly. However, the pulsation may indicate that road conditions are hazardous and extra care is required while driving.

VEHICLE DYNAMIC CONTROL (VDC) SYSTEM

The Vehicle Dynamic Control (VDC) system uses various sensors to monitor driver inputs and vehicle motion. Under certain driving conditions, the VDC System helps to perform the following functions:

- Controls brake pressure to reduce wheel slip on one slipping drive wheel so power is transferred to a non slipping drive wheel on the same axle.
- Controls brake pressure and engine output to reduce drive wheel slip based on vehicle speed (traction control function).
- Controls brake pressure at individual wheels and engine output to help the driver maintain control of the vehicle in the following conditions:
  - understeer (vehicle tends to not follow the steered path despite increased steering input)
  - oversteer (vehicle tends to spin due to certain road or driving conditions)

The VDC system can help the driver to maintain control of the vehicle, but it cannot prevent loss of vehicle control in all driving situations.

When the VDC system operates, the indicator in the instrument panel flashes so note the following:

- The road may be slippery or the system may determine some action is required to help keep the vehicle on the steered path.
- You may feel a pulsation in the brake pedal and hear a noise or vibration from under the hood. This is normal and indicates that the VDC system is working properly.
- Adjust your speed and driving to the road conditions.

See “Slip indicator light” and ”Vehicle Dynamic Control (VDC) off indicator light” in the ”Instruments and controls” section.

If a malfunction occurs in the system, the and indicator lights come on in the instrument panel. The VDC system automatically turns off when these indicator lights are on.

The VDC OFF switch is used to turn off the VDC system. The indicator illuminates to indicate the VDC system is off.

When the VDC switch is used to turn off the system, the VDC system still operates to prevent one drive wheel from slipping by transferring power to a non slipping drive wheel. The indicator flashes if this occurs. All other VDC functions are off and the indicator will not flash.

The VDC system is automatically reset to on when the ignition switch is placed in the off position then back to the on position.

The computer has a built in diagnostic feature that tests the system each time you start the engine and move the vehicle forward or in reverse at a slow speed. When the self-test occurs, you may hear a clunk noise and/or feel a pulsation in the brake pedal. This is normal and is not an indication of a malfunction.

WARNING

- **The VDC system is designed to help the driver maintain stability but does not prevent accidents due to abrupt steering operation at high speeds or by careless or dangerous driving techniques. Reduce vehicle speed and be especially careful when driving and cornering on slippery surfaces and always drive carefully.**
- **Do not modify the vehicle's suspension. If suspension parts such as shock absorbers, struts, springs, stabilizer bars, bushings and wheels are not NISSAN recommended for your vehicle or are extremely deteriorated, the VDC system may not operate properly. This could adversely affect vehicle handling performance, and the indicator may flash or both the and OFF indicator lights may illuminate.**
- **If brake related parts such as brake pads, rotors and calipers are not NISSAN recommended or are extremely deteriorated, the VDC system may not operate properly and both the and the OFF indicator lights may illuminate.**
- **If engine control related parts are not NISSAN recommended or are extremely deteriorated, both the and OFF indicator lights may illuminate.**
- **When driving on extremely inclined surfaces such as higher banked corners, the VDC system may not operate properly and the indicator may flash or both the and OFF indicator lights may illuminate. Do not drive on these types of roads.**
- **When driving on an unstable surface such as a turntable, ferry, elevator or ramp, the indicator may flash or both the and OFF indicator lights may illuminate. This is not a malfunction. Restart the engine after driving onto a stable surface.**
- **If wheels or tires other than the NISSAN recommended ones are used, the VDC system may not operate properly and the indicator may flash or both the and OFF indicator lights may illuminate.**
- **The VDC system is not a substitute for winter tires or tire chains on a snow covered road.**

FREEING A FROZEN DOOR LOCK

To prevent a door lock from freezing, apply de-icer through the key hole. If the lock becomes frozen, heat the key before inserting it into the key hole or use the remote keyless entry function on the Intelligent Key.

ANTI-FREEZE

In the winter when it is anticipated that the temperature will drop below 32°F (0°C), check the anti-freeze to assure proper winter protection. For details, see “Engine cooling system” in the “Maintenance and do-it-yourself” section of this manual.

BATTERY

If the battery is not fully charged during extremely cold weather conditions, the battery fluid may freeze and damage the battery. To maintain maximum efficiency, the battery should be checked regularly. For details, see “Battery” in the “Maintenance and do-it-yourself” section of this manual.

DRAINING OF COOLANT WATER

If the vehicle is to be left outside without anti-freeze, drain the cooling system, including the engine block. Refill before operating the vehicle. For details, see “Changing engine coolant” in the “Maintenance and do-it-yourself” section of this manual.

TIRE EQUIPMENT

1. SUMMER tires have a tread designed to provide superior performance on dry pavement. However, the performance of these tires will be substantially reduced in snowy and icy conditions. If you operate your vehicle on snowy or icy roads, NISSAN recommends the use of MUD & SNOW or ALL SEASON TIRES on all four wheels. Please consult a NISSAN dealer for the tire type, size, speed rating and availability information.
2. For additional traction on icy roads, studded tires may be used. However, some U.S. states and Canadian provinces prohibit their use. Check local, state and provincial laws before installing studded tires.

Skid and traction capabilities of studded snow tires on wet or dry surfaces may be poorer than that of non-studded snow tires.

3. Tire chains may be used. For details see “Tire chains” in the “Maintenance and do-it-yourself” section of this manual.

SPECIAL WINTER EQUIPMENT

It is recommended that the following items be carried in the vehicle during winter:

- A scraper and stiff-bristled brush to remove ice and snow from the windows and wiper blades.
- A sturdy, flat board to be placed under the jack to give it firm support.
- A shovel to dig the vehicle out of snowdrifts.
- Extra washer fluid to refill the windshield-washer fluid reservoir.

DRIVING ON SNOW OR ICE

⚠ WARNING

- **Wet ice (32°F, 0°C and freezing rain), very cold snow or ice can be slick and very hard to drive on. The vehicle will have much less traction or “grip” under these conditions. Try to avoid driving on wet ice until the road is salted or sanded.**

- **Whatever the condition, drive with caution. Accelerate and slow down with care. If accelerating or downshifting too fast, the drive wheels will lose even more traction.**
- **Allow more stopping distance under these conditions. Braking should be started sooner than on dry pavement.**
- **Allow greater following distances on slippery roads.**
- **Watch for slippery spots (glare ice). These may appear on an otherwise clear road in shaded areas. If a patch of ice is seen ahead, brake before reaching it. Try not to brake while on the ice, and avoid any sudden steering maneuvers.**
- **Do not use the cruise control on slippery roads.**
- **Snow can trap dangerous exhaust gases under your vehicle. Keep snow clear of the exhaust pipe and from around your vehicle.**

ENGINE BLOCK HEATER (if so equipped)

⚠ WARNING

- **Do not use your engine block heater with an ungrounded electrical system or a 2-pronged adapter. You can be seriously injured by an electrical shock if you use an ungrounded connection.**
- **Disconnect and properly store the engine block heater cord before starting the engine. Damage to the cord could result in an electrical shock and can cause serious injury.**
- **Use a heavy-duty 3-wire, 3-pronged extension cord rated for at least 10 A. Plug the extension cord into a Ground Fault Interrupt (GFI) protected, grounded 110-VAC outlet. Failure to use the proper extension cord or a grounded outlet can result in a fire or electrical shock and cause serious personal injury.**

Engine block heaters are available through NISSAN dealers to assist in cold temperature starting. The engine block heater should be used when the outside temperature is 20° F (-7° C) or lower.

To use the engine block heater:

1. Turn the engine off.
2. Open the hood and unwrap the engine block heater cord.
3. Plug the engine block heater cord into a grounded 3-wire, 3-pronged extension cord.
4. Plug the extension cord into a Ground Fault Interrupt (GFI) protected, grounded 110-volt AC (VAC) outlet.
5. The engine block heater must be plugged in for at least 2 - 4 hours, depending on outside temperatures, to properly warm the engine coolant. Use an appropriate timer to turn the engine block heater on.
6. Before starting the engine, unplug and properly store the cord to keep it away from moving parts.

MEMO

6 In case of emergency

Emergency engine shut off 6-2
Flat tire 6-2
Tire Pressure Monitoring System (TPMS). 6-2
Changing a flat tire 6-3
Jump starting 6-8
Push starting. 6-10
If your vehicle overheats 6-10
Towing your vehicle 6-11
Towing recommended by NISSAN 6-12
Vehicle recovery (freeing a stuck vehicle). 6-14

EMERGENCY ENGINE SHUT OFF

To shut off the engine in an emergency situation while driving perform the following procedure:

– Rapidly push the push-button ignition switch 3 consecutive times, or

– Push and hold the push-button ignition switch for more than 2 seconds.

FLAT TIRE

TIRE PRESSURE MONITORING SYSTEM (TPMS)

This vehicle is equipped with the Tire Pressure Monitoring System (TPMS). It monitors tire pressure of all tires except the spare. When the low tire pressure warning light is lit, and the CHECK TIRE PRESSURE warning appears in the vehicle information display, one or more of your tires is significantly under-inflated. If the vehicle is being driven with low tire pressure, the TPMS will activate and warn you of it by the low tire pressure warning light. This system will activate only when the vehicle is driven at speeds above 16 MPH (25 km/h). For more details, refer to "Warning/indicator lights and audible reminders" in the "Instruments and controls" section, and "Tire Pressure Monitoring System (TPMS)" in the "Starting and driving" section.

⚠ WARNING

- **If the low tire pressure warning light illuminates while driving, avoid sudden steering maneuvers or abrupt braking, reduce vehicle speed, pull off the road to a safe location and stop the vehicle as soon as possible. Driving with under-inflated tires may permanently damage the tires and increase the likelihood of tire failure. Serious vehicle damage could occur and may lead to an accident and could result in serious personal injury. Check the tire pressure for all four tires. Adjust the tire pressure to the recommended COLD tire pressure shown on the Tire and Loading Information label to turn the low tire pressure warning light OFF. If you have a flat tire, replace it with a spare tire as soon as possible.**
- **When a spare tire is mounted or a wheel is replaced, the TPMS will not function and the low tire pressure warning light will flash for approximately 1 minute. The light will remain on after 1 minute. Contact your NISSAN dealer as soon as possible for tire replacement and/or system resetting.**

- **Replacing tires with those not originally specified by NISSAN could affect the proper operation of the TPMS.**
- **Do not inject any tire liquid or aerosol tire sealant into the tires, as this may cause a malfunction of the tire pressure sensors.**

CHANGING A FLAT TIRE

If you have a flat tire, follow the instructions below:

Stopping the vehicle

1. Safely move the vehicle off the road and away from traffic.
2. Turn on the hazard warning flashers.
3. Park on a level surface and apply the parking brake. Shift the manual transmission into R (Reverse), or the CVT into P (Park).
4. Turn off the engine.
5. Raise the hood to warn other traffic and to signal professional road assistance personnel that you need assistance.
6. Have all passengers get out of the vehicle and stand in a safe place, away from traffic and clear of the vehicle.

⚠WARNING

- **Make sure the parking brake is securely applied and the manual transmission is shifted into R (Reverse), or the CVT is shifted into P (Park).**
- **Never change tires when the vehicle is on a slope, ice or slippery areas. This is hazardous.**
- **Never change tires if oncoming traffic is close to your vehicle. Wait for professional road assistance.**

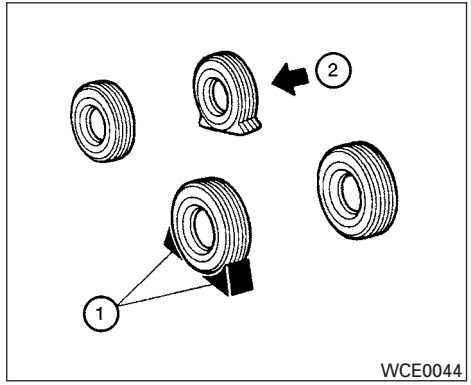

Blocking wheels

Place suitable blocks ① at both the front and back of the wheel diagonally opposite the flat tire ② to prevent the vehicle from moving when it is jacked up.

⚠WARNING

Be sure to block the wheel as the vehicle may move and result in personal injury.

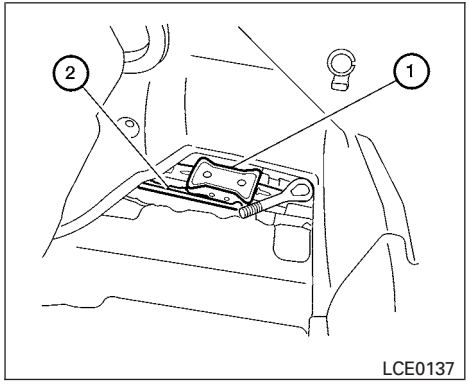

Sedan

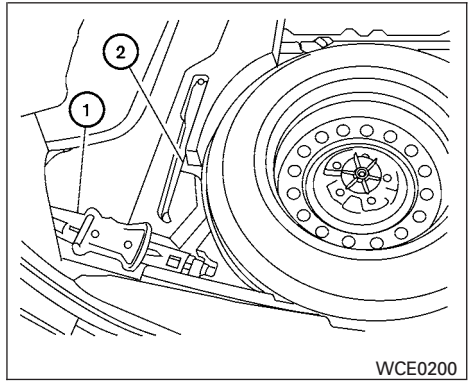

Coupe

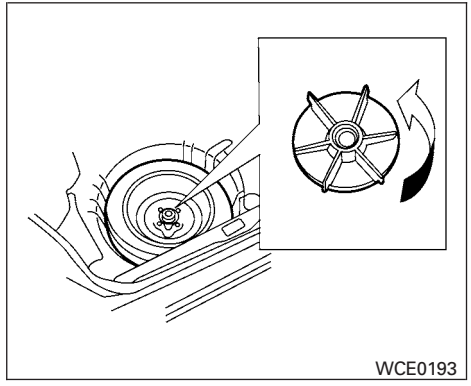

Sedan

Getting the spare tire and tools

Open the trunk. Lift the trunk floor carpeting and spare tire cover. Remove the jack ① and wheel nut wrench ② from the tool box.

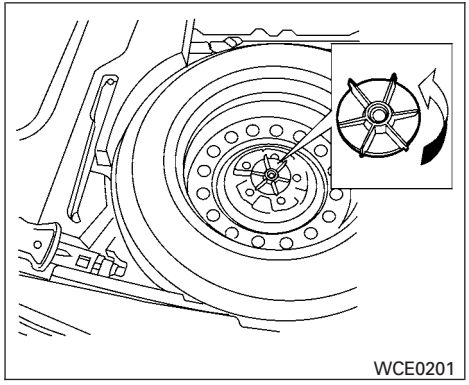

Coupe

Turn the clamp to remove the spare tire. Remove the spare tire.

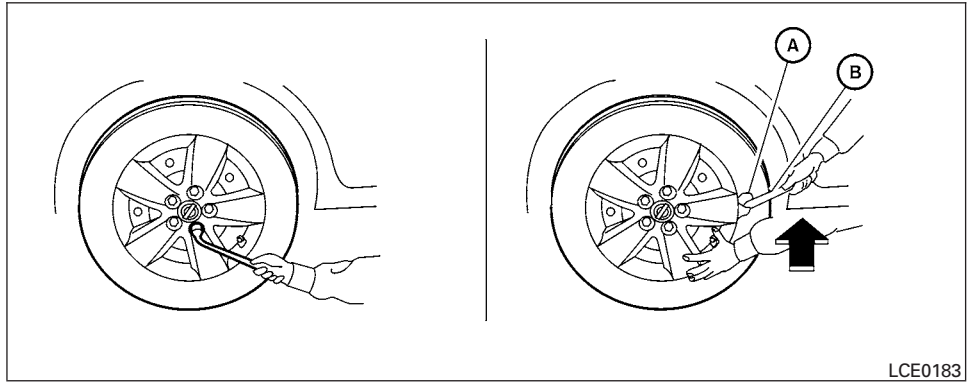

Removing the bolt-on wheel cover (if so equipped)

⚠ CAUTION

Do not use your hands to pry off wheel caps or wheel covers. Doing so could result in personal injury.

The wheel covers are held on by the wheel nuts. The wheel cover will be removed along with the wheel when the nuts are removed.

To remove the wheel cover, use the jack rod Ⓑ as illustrated.

Apply cloth Ⓐ between the wheel and jack rod to prevent damaging the wheel and wheel cover.

Use caution not to scratch the wheel cover or wheel surface.

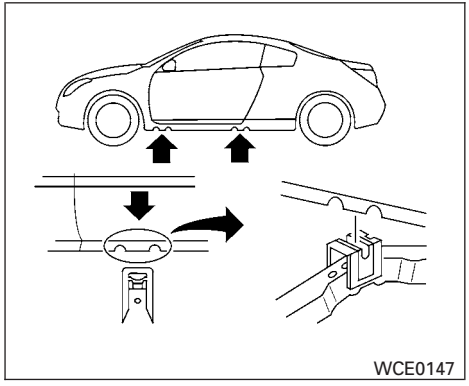

Jack-up point coupe

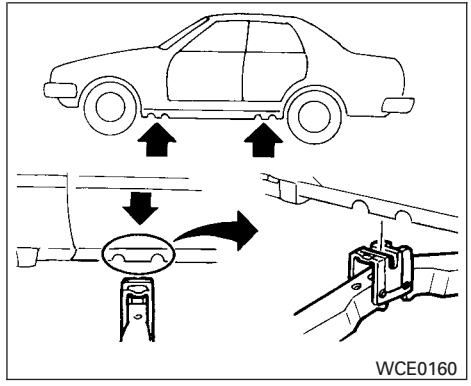

Jack-up point sedan

Jacking up vehicle and removing the damaged tire

⚠ WARNING

- **Never get under the vehicle while it is supported only by the jack. If it is necessary to work under the vehicle, support it with safety stands.**
- **Use only the jack provided with your vehicle to lift the vehicle. Do not use the jack provided with your vehicle on other vehicles. The jack is designed for lifting only your vehicle during a tire change.**
- **Use the correct jack-up points. Never use any other part of the vehicle for jack support.**
- **Never jack up the vehicle more than necessary.**
- **Never use blocks on or under the jack.**
- **Do not start or run the engine while vehicle is on the jack. It may cause the vehicle to move. This is especially true for vehicles with limited slip differentials.**
- **Do not allow passengers to stay in the vehicle while it is on the jack.**
- **Never run the engine with a wheel(s) off the ground. It may cause the vehicle to move.**

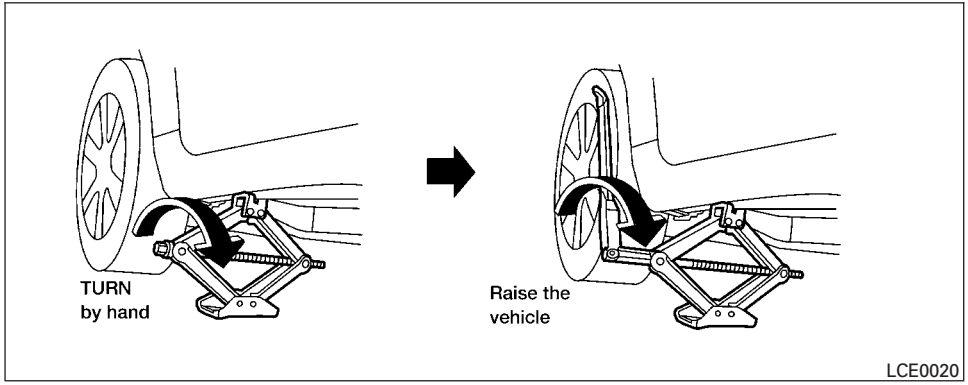

Always refer to the proper illustrations for the correct placement and jack-up points for your specific vehicle model and jack type.

Carefully read the caution label attached to the jack body and the following instructions.

1. Loosen each wheel nut one or two turns by turning counterclockwise with the wheel nut wrench. **Do not remove the wheel nuts until the tire is off the ground.**
2. Place the jack directly under the jack-up point as illustrated so the top of the jack contacts the vehicle at the jack-up point. Align the jack head between the two notches in the front or the rear as shown. Also fit the groove of the jack head between the notches as shown.

   The jack should be used on firm and level ground.
3. To lift the vehicle, securely hold the jack lever and rod with both hands. Carefully raise the vehicle until the tire clears the ground. Remove the wheel nuts, and then remove the tire.

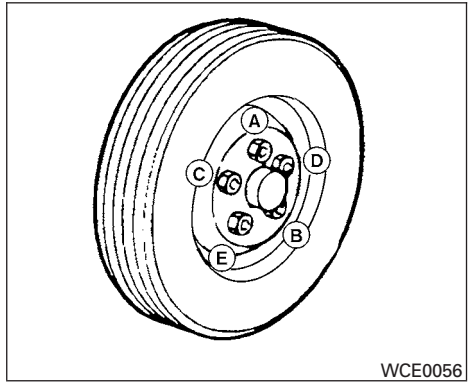

Installing the spare tire

The spare tire is designed for emergency use. See specific instructions under the heading "Wheels and tires" in the "Maintenance and do-it-yourself" section of this manual.

1. Clean any mud or dirt from the surface between the wheel and hub.
2. Carefully put the spare tire on and tighten the wheel nuts finger tight.
3. With the wheel nut wrench, tighten wheel nuts alternately and evenly as illustrated until they are tight.

4. Lower the vehicle slowly until the tire touches the ground. Then, with the wheel nut wrench, tighten the wheel nuts securely in the sequence illustrated (Ⓐ, Ⓑ, Ⓒ, Ⓓ, Ⓔ). Lower the vehicle completely.

⚠ WARNING

- **Incorrect wheel nuts or improperly tightened wheel nuts can cause the wheel to become loose or come off. This could cause an accident.**
- **Do not use oil or grease on the wheel studs or nuts. This could cause the nuts to become loose.**
- **Retighten the wheel nuts when the vehicle has been driven for 600 miles (1,000 km) (also in cases of a flat tire, etc.).**

As soon as possible, tighten the wheel nuts to the specified torque with a torque wrench.

Wheel nut tightening torque:

83 ft-lb (113 N·m)

The wheel nuts must be kept tightened to specification at all times. It is recommended that wheel nuts be tightened to specifications at each lubrication interval.

Adjust tire pressure to the COLD pressure.

COLD pressure: After vehicle has been parked for three hours or more or driven less than 1 mile (1.6 km).

COLD tire pressures are shown on the tire and loading information label affixed to the driver side center pillar.

5. Securely store the flat tire and jacking equipment in the vehicle.
6. Place the spare tire cover and the trunk floor carpeting over the damaged tire.
7. Close the trunk.

⚠ WARNING

- **Always make sure that the spare tire and jacking equipment are properly secured after use. Such items can become dangerous projectiles in an accident or sudden stop.**
- **The spare tire is designed for emergency use. See specific instructions under the heading "Wheels and tires" in the "Maintenance and do-it-yourself" section of this manual.**

To start your engine with a booster battery, the instructions and precautions below must be followed.

⚠ WARNING

- **If done incorrectly, jump starting can lead to a battery explosion, resulting in severe injury or death. It could also damage your vehicle.**
- **Explosive hydrogen gas is always present in the vicinity of the battery. Keep all sparks and flames away from the battery.**
- **Do not allow battery fluid to come into contact with eyes, skin, clothing or painted surfaces. Battery fluid is a corrosive sulfuric acid solution which can cause severe burns. If the fluid should come into contact with anything, immediately flush the contacted area with water.**
- **Keep battery out of the reach of children.**
- **The booster battery must be rated at 12 volts. Use of an improperly rated battery can damage your vehicle.**

- **Whenever working on or near a battery, always wear suitable eye protectors (for example, goggles or industrial safety spectacles) and remove rings, metal bands, or any other jewelry. Do not lean over the battery when jump starting.**
- **Do not attempt to jump start a frozen battery. It could explode and cause serious injury.**
- **Your vehicle has an automatic engine cooling fan. It could come on at any time. Keep hands and other objects away from it.**

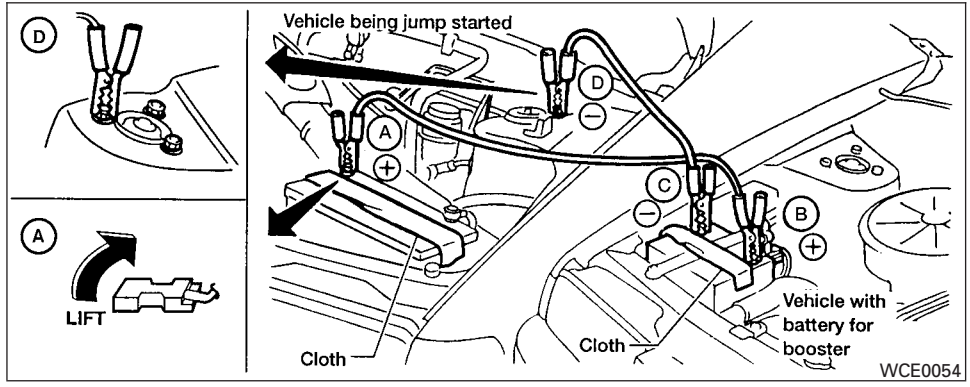

⚠WARNING

Always follow the instructions below. Failure to do so could result in damage to the charging system and cause personal injury.

1. If the booster battery is in another vehicle, position the two vehicles to bring their batteries near each other.

   Do not allow the two vehicles to touch.

2. Apply the parking brake. Move the shift selector to N (Neutral) (manual transmission) or to P (Park) (Continuously Variable Transmission). Switch off all unnecessary electrical systems (lights, heater, air conditioner, etc.).
3. Remove vent caps on the battery (if so equipped). Cover the battery with an old cloth to reduce explosion hazard.
4. Connect jumper cables in the sequence illustrated (Ⓐ, Ⓑ, Ⓒ, Ⓓ).

CAUTION

- **Always connect positive (+) to positive (+) and negative (−) to body ground (for example, strut mounting bolt, engine lift bracket, etc.) — not to the battery.**
- **Make sure the jumper cables do not touch moving parts in the engine compartment and that the cable clamps do not contact any other metal.**

5. Start the engine of the booster vehicle and let it run for a few minutes.
6. Keep the engine speed of the booster vehicle at about 2,000 rpm, and start the engine of the vehicle being jump started.

CAUTION

Do not keep the starter motor engaged for more than 10 seconds. If the engine does not start right away, turn the key off and wait 3 to 4 seconds before trying again.

7. After starting the engine, carefully disconnect the negative cable and then the positive cable.
8. Replace the vent caps (if so equipped). Be sure to dispose of the cloth used to cover the vent holes as it may be contaminated with corrosive acid.

PUSH STARTING

CAUTION

- **Do not push start this vehicle. The three-way catalyst may be damaged.**
- **Continuously Variable Transmission (CVT) models cannot be push-started or tow-started. Attempting to do so may cause transmission damage.**
- **For manual transmission (M/T) models, never try to start the vehicle by towing it. When the engine starts, the forward surge could cause the vehicle to collide with the tow vehicle.**

IF YOUR VEHICLE OVERHEATS

If your vehicle is overheating (indicated by an extremely high temperature gauge reading), or if you feel a lack of engine power, detect abnormal noise, etc., take the following steps.

WARNING

- **Do not continue to drive if your vehicle overheats. Doing so could cause engine damage or a vehicle fire.**
- **To avoid the danger of being scalded, never remove the radiator cap while the engine is still hot. When the radiator cap is removed, pressurized hot water will spurt out, possibly causing serious injury.**
- **Do not open the hood if steam is coming out.**

1. Move the vehicle safely off the road, apply the parking brake and move the shift selector to N (Neutral) (manual transmission) or to P (Park) (CVT).

   Do not stop the engine.

2. Turn off the air conditioner. Open all the windows, move the heater or air conditioner temperature control to maximum hot and fan control to high speed.

3. Get out of the vehicle. Look and listen for steam or coolant escaping from the radiator before opening the hood. (If steam or coolant is escaping, turn off the engine.) Do not open the hood further until no steam or coolant can be seen.
4. Open the engine hood.

⚠ WARNING

If steam or water is coming from the engine, stand clear to prevent getting burned.

5. Visually check drive belts for damage or looseness. Also check if the cooling fan is running. The radiator hoses and radiator should not leak water. If coolant is leaking, the water pump belt is missing or loose, or the cooling fan does not run, stop the engine.

⚠ WARNING

Be careful not to allow your hands, hair, jewelry or clothing to come into contact with, or get caught in, engine belts or the engine cooling fan. The engine cooling fan can start at any time.

6. After the engine cools down, check the coolant level in the engine coolant reservoir tank with the engine running. Add coolant to the engine coolant reservoir tank, if necessary. Have your vehicle repaired at a NISSAN dealer.

When towing your vehicle, all State (Provincial in Canada) and local regulations for towing must be followed. Incorrect towing equipment could damage your vehicle. Towing instructions are available from a NISSAN dealer. Local service operators are generally familiar with the applicable laws and procedures for towing. To assure proper towing and to prevent accidental damage to your vehicle, NISSAN recommends having a service operator tow your vehicle. It is advisable to have the service operator carefully read the following precautions:

⚠ WARNING

- **Never ride in a vehicle that is being towed.**
- **Never get under your vehicle after it has been lifted by a tow truck.**

⚠ CAUTION

- **When towing, make sure that the transmission, axles, steering system and powertrain are in working condition. If any of these conditions apply, dollies or a flatbed tow truck must be used.**
- **Always attach safety chains before towing.**

For information about towing your vehicle behind a recreational vehicle (RV), refer to “Flat towing” in the “Technical and consumer information” section of this manual.

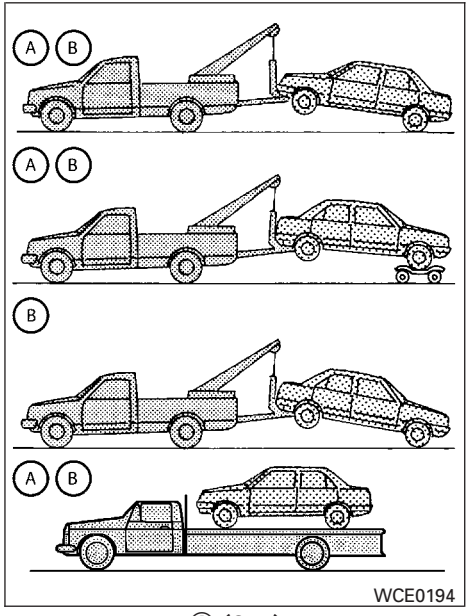

Ⓐ (CVT)
Ⓑ (M/T)

TOWING RECOMMENDED BY NISSAN

NISSAN recommends that your vehicle be towed with the driving (front) wheels off the ground or place the vehicle on a flat bed truck as illustrated.

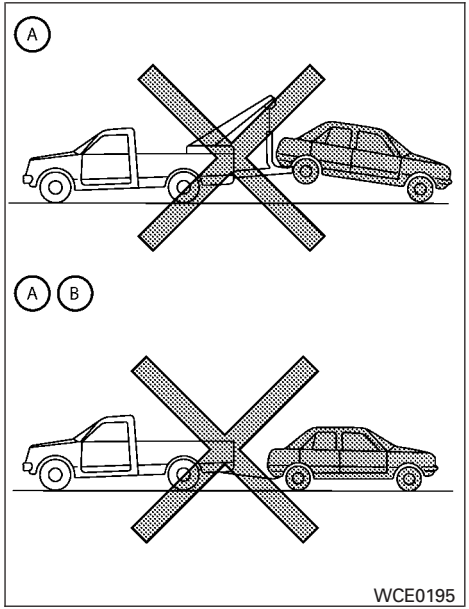

Ⓐ (CVT)
Ⓑ (M/T)

⚠ CAUTION

- **Never tow Continuously Variable Transmission (CVT) models with the front wheels on the ground or four wheels on the ground (forward or backward), as this may cause serious and expensive damage to the transmission. If it is necessary to tow the vehicle with the rear wheels raised always use towing dollies under the front wheels.**
- **When towing Continuously Variable Transmission (CVT) models with the front wheels on towing dollies, or when towing manual transmission (M/T) models with the front wheels on the ground:**
  - **Place the ignition switch in the OFF position, and secure the steering wheel in a straight-ahead position with a rope or similar device.**
  - **Move the shift selector to the N (Neutral) position.**
- **When towing Continuously Variable Transmission (CVT) or manual transmission models (M/T) with the rear wheels on the ground (if you do not use towing dollies): Always release the parking brake.**
- **Observe the following restricted towing speeds and distances for manual transmissions (M/T) only:**
  - **Speed: Below 50 MPH (80 km/h)**
  - **Distance: Less than 50 miles (80 km)**

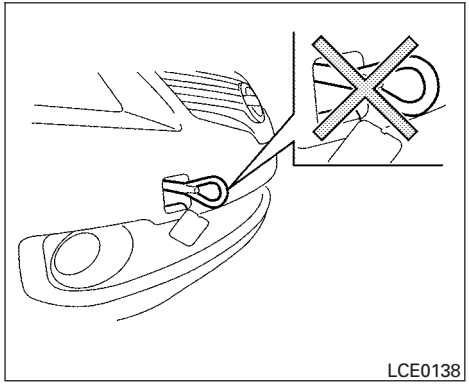

VEHICLE RECOVERY (freeing a stuck vehicle)

Pulling a stuck vehicle

⚠ WARNING

To avoid vehicle damage, serious personal injury or death when recovering a stuck vehicle:

- **Contact a professional towing service to recover the vehicle if you have any questions regarding the recovery procedure.**
- **Do not use the vehicle tie-downs to tow or free a stuck vehicle.**
- **Only use devices specifically designed for vehicle recovery and follow the manufacturer's instructions.**
- **Always pull the recovery device straight out from the front of the vehicle. Never pull at an angle.**
- **Route recovery devices so they do not touch any part of the vehicle except the attachment point.**

If your vehicle is stuck in sand, snow, mud, etc., use a tow strap or other device designed specifically for vehicle recovery. Always follow the manufacturer's instructions for the recovery device.

Do not use the tie-down hooks for towing or vehicle recovery.

Rocking a stuck vehicle

⚠ WARNING

- **Stand clear of a stuck vehicle.**
- **Do not spin your tires at high speed. This could cause them to explode and result in serious injury. Parts of your vehicle could also overheat and be damaged.**

If your vehicle is stuck in sand, snow, mud, etc., use the following procedure:

1. Turn off the Vehicle Dynamic Control System.
2. Make sure the area in front and behind the vehicle is clear of obstructions.
3. Turn the steering wheel right and left to clear an area around the front tires.
4. Slowly rock the vehicle forward and backward.
   - Shift back and forth between R (Reverse) and D (Drive) (CVT models) or 1st (Low) and R (Reverse) (M/T models).
   - Apply the accelerator as little as possible to maintain the rocking motion.
   - Release the accelerator pedal before shifting between R (Reverse) and D (Drive) (CVT models) or 1st (Low) and R (Reverse) (M/T models).
   - Do not spin the tires above 35 mph (55 km/h).
5. If the vehicle cannot be freed after a few tries, contact a professional towing service to remove the vehicle.

7 Appearance and care

Cleaning exterior 7-2
Washing 7-2
Waxing 7-2
Removing spots 7-3
Underbody 7-3
Glass 7-3
Aluminum alloy wheels (if so equipped) 7-3
Chrome parts 7-4
Tire dressings 7-4
Cleaning interior 7-4
Air fresheners 7-5
Floor mats 7-5
Seat belts 7-6
Corrosion protection 7-6
Most common factors contributing to vehicle corrosion 7-6
Environmental factors influence the rate of corrosion 7-6
To protect your vehicle from corrosion 7-6

In order to maintain the appearance of your vehicle, it is important to take proper care of it.

To protect the paint surfaces, please wash your vehicle as soon as you can:

- after a rainfall to prevent possible damage from acid rain.
- after driving on coastal roads.
- when contaminants such as soot, bird droppings, tree sap, metal particles or bugs get on the paint surface.
- when dust or mud builds up on the surface.

Whenever possible, store or park your vehicle inside a garage or in a covered area.

When it is necessary to park outside, park in a shady area or protect the vehicle with a body cover.

Be careful not to scratch the paint surface when putting on or removing the body cover.

WASHING

Wash dirt off with a wet sponge and plenty of water. Clean the vehicle thoroughly using a mild soap, a special vehicle soap or general purpose dishwashing liquid mixed with clean, lukewarm (never hot) water.

⚠ CAUTION

- **Do not use car washes that use acid in the detergent. Some car washes, especially brushless ones, use some acid for cleaning. The acid may react with some plastic vehicle components, causing them to crack. This could affect their appearance, and also could cause them not to function properly. Always check with your car wash to confirm that acid is not used.**
- **Do not wash the vehicle with strong household soap, strong chemical detergents, gasoline or solvents.**
- **Do not wash the vehicle in direct sunlight or while the vehicle body is hot, as the surface may become water-spotted.**
- **Avoid using tight-napped or rough cloths, such as washing mitts. Care must be taken when removing caked-on dirt or other foreign substances so the paint surface is not scratched or damaged.**

Rinse the vehicle thoroughly with plenty of clean water.

Inside flanges, seams and folds on the doors, hatches and hood are particularly vulnerable to the effects of road salt. Therefore, these areas must be cleaned regularly. Take care that the drain holes in the lower edge of the door are open. Spray water under the body and in the wheel wells to loosen the dirt and wash away road salt.

A damp chamois can be used to dry the vehicle to avoid water spots.

WAXING

Regular waxing protects the paint surface and helps retain new vehicle appearance. Polishing is recommended to remove built-up wax residue and to avoid a weathered appearance before re-applying wax.

A NISSAN dealer can assist you in choosing the proper product.

- Wax your vehicle only after a thorough washing. Follow the instructions supplied with the wax.
- Do not use a wax containing any abrasives, cutting compounds or cleaners that may damage the vehicle finish.

Machine compounding or aggressive polishing on a base coat/clear coat paint finish may dull the finish or leave swirl marks.

REMOVING SPOTS

Remove tar and oil spots, industrial dust, insects, and tree sap as quickly as possible from the surface of the paint to avoid lasting damage or staining. Special cleaning products are available at a NISSAN dealer or any automotive accessory store.

UNDERBODY

In areas where road salt is used in winter, it is necessary to clean the underbody regularly in order to prevent dirt and salt from building up and causing the acceleration of corrosion on the underbody and suspension. Before the winter period and again in the spring, the underseal must be checked and, if necessary, retreated.

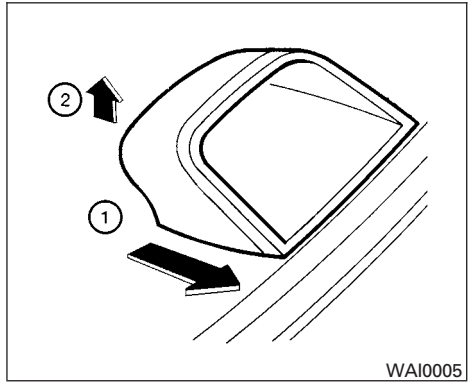

GLASS

When cleaning the rear window, it may be easier to clean if the high-mounted stop light (if so equipped) is removed first.

Be careful when removing the high-mounted stop light to reduce the risk of damaging the high-mounted stop light wires.

To remove the high-mounted stop light:

① Push toward rear of vehicle.

② Lift to remove.

The high-mounted stop light must be properly reinstalled before driving your vehicle.

Use glass cleaner to remove smoke and dust film from the glass surfaces. It is normal for glass to become coated with a film after the vehicle is parked in the hot sun. Glass cleaner and a soft cloth will easily remove this film.

⚠ CAUTION

When cleaning the inside of the windows, do not use sharp-edged tools, abrasive cleaners or chlorine-based disinfectant cleaners. They could damage the electrical conductors, radio antenna elements or rear window defroster elements.

ALUMINUM ALLOY WHEELS (if so equipped)

Wash the wheels regularly with a sponge dampened in a mild soap solution, especially during winter months in areas where road salt is used. If not removed, road salt can discolor the wheels.

⚠ CAUTION

Follow the directions below to avoid staining or discoloring the wheels:

- **Do not use a cleaner that uses strong acid or alkali contents to clean the wheels.**

- **Do not apply wheel cleaners to the wheels when they are hot. The wheel temperature should be the same as ambient temperature.**
- **Rinse the wheel to completely remove the cleaner within 15 minutes after the cleaner is applied.**

CHROME PARTS

Clean all chrome parts regularly with a non-abrasive chrome polish to maintain the finish.

TIRE DRESSINGS

NISSAN does not recommend the use of tire dressings. Tire manufacturers apply a coating to the tires to help reduce discoloration of the rubber. If a tire dressing is applied to the tires, it may react with the coating and form a compound. This compound may come off the tire while driving and stain the vehicle paint.

If you choose to use a tire dressing, take the following precautions:

- Use a water-based tire dressing. The coating on the tire dissolves more easily than with an oil-based tire dressing.
- Apply a light coat of tire dressing to help prevent it from entering the tire tread/grooves (where it would be difficult to remove).
- Wipe off excess tire dressing using a dry towel. Make sure the tire dressing is completely removed from the tire tread/grooves.
- Allow the tire dressing to dry as recommended by the tire dressing manufacturer.

CLEANING INTERIOR

Occasionally remove loose dust from the interior trim, plastic parts and seats using a vacuum cleaner or soft bristled brush. Wipe the vinyl and leather surfaces with a clean, soft cloth dampened in mild soap solution, then wipe clean with a dry, soft cloth.

Regular care and cleaning is required in order to maintain the appearance of the leather.

Before using any fabric protector, read the manufacturer's recommendations. Some fabric protectors contain chemicals that may stain or bleach the seat material.

Use a cloth dampened only with water to clean the meter and gauge lens.

⚠ WARNING

Do not use water or acidic cleaners (hot steam cleaners) on the seat. This can damage the seat or occupant classification sensor. This can also affect the operation of the air bag system and result in serious personal injury.

⚠ CAUTION

- **Never use benzine, thinner or any similar material.**
- **Small dirt particles can be abrasive and damaging to leather surfaces and should be removed promptly. Do not use saddle soap, car waxes, polishes, oils, cleaning fluids, solvents, detergents or ammonia-based cleaners as they may damage the leather's natural finish.**
- **Never use fabric protectors unless recommended by the manufacturer.**
- **Do not use glass or plastic cleaner on meter or gauge lens covers. It may damage the lens cover.**

AIR FRESHENERS

Most air fresheners use a solvent that could affect the vehicle interior. If you use an air freshener, take the following precautions:

- Hanging-type air fresheners can cause permanent discoloration when they contact vehicle interior surfaces. Place the air freshener in a location that allows it to hang free and not contact an interior surface.
- Liquid-type air fresheners typically clip on the vents. These products can cause immediate damage and discoloration when spilled on interior surfaces.

Carefully read and follow the manufacturer's instructions before using the air fresheners.

FLOOR MATS

⚠ WARNING

To avoid potential pedal interference that may result in a collision or injury:

- **NEVER place a floor mat on top of another floor mat in the driver front position.**
- **Use only genuine NISSAN floor mats specifically designed for use in your vehicle model. See your NISSAN dealer for more information.**
- **Properly position the mats in the floorwell using the floor mat positioning aid. See "Floor mat positioning aid" in this section.**

The use of genuine NISSAN floor mats can extend the life of your vehicle carpet and make it easier to clean the interior. Mats should be maintained with regular cleaning and replaced if they become excessively worn.

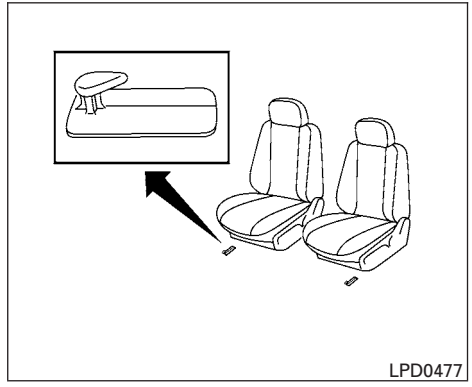

Floor mat positioning aid

This vehicle includes a front floor mat bracket to act as a floor mat positioning aid. Genuine NISSAN floor mats have been specially designed for your vehicle model. The driver's and passenger's side floor mats have a grommet hole incorporated in them. Position the mat by placing the floor mat bracket hook through the floor mat grommet hole while centering the mat in the floorwell.

Periodically check to make certain the mats are properly positioned.

SEAT BELTS

The seat belts can be cleaned by wiping them with a sponge dampened in a mild soap solution. Allow the belts to dry completely in the shade before using them. See “Seat belt maintenance” in the “Safety – Seats, seat belts and supplemental restraint system” section of this manual.

⚠ WARNING

Do not allow wet seat belts to roll up in the retractor. NEVER use bleach, dye or chemical solvents to clean the seat belts, since these materials may severely weaken the seat belt webbing.

MOST COMMON FACTORS CONTRIBUTING TO VEHICLE CORROSION

- The accumulation of moisture-retaining dirt and debris in body panel sections, cavities, and other areas.
- Damage to paint and other protective coatings caused by gravel and stone chips or minor traffic accidents.

ENVIRONMENTAL FACTORS INFLUENCE THE RATE OF CORROSION

Moisture

Accumulation of sand, dirt and water on the vehicle body underside can accelerate corrosion. Wet floor coverings will not dry completely inside the vehicle and should be removed for drying to avoid floor panel corrosion.

Relative humidity

Corrosion will be accelerated in areas of high relative humidity, especially those areas where the temperatures stay above freezing and where atmospheric pollution exists and road salt is used.

Temperature

High temperatures accelerate the rate of corrosion to those parts which are not well ventilated.

Air pollution

Industrial pollution, the presence of salt in the air in coastal areas, or heavy road salt use accelerates the corrosion process. Road salt also accelerates the disintegration of paint surfaces.

TO PROTECT YOUR VEHICLE FROM CORROSION

- Wash and wax your vehicle often to keep the vehicle clean.
- Always check for minor damage to the paint and repair it as soon as possible.
- Keep drain holes at the bottom of the doors open to avoid water accumulation.
- Check the underbody for accumulation of sand, dirt or salt. If present, wash with water as soon as possible.

⚠ CAUTION

- **NEVER remove dirt, sand or other debris from the passenger compartment by washing it out with a hose. Remove dirt with a vacuum cleaner or broom.**
- **Never allow water or other liquids to come in contact with electronic components inside the vehicle as this may damage them.**

Chemicals used for road surface de-icing are extremely corrosive. They accelerate corrosion and deterioration of underbody components such as the exhaust system, fuel and brake lines, brake cables, floor pan and fenders.

In winter, the underbody must be cleaned periodically.

For additional protection against rust and corrosion, which may be required in some areas, consult a NISSAN dealer.

8 Maintenance and do-it-yourself

Maintenance requirements 8-2
General maintenance 8-2
Explanation of general maintenance items 8-2
Maintenance precautions 8-5
Engine compartment check locations 8-6
Engine cooling system 8-8
Checking engine coolant level 8-9
Changing engine coolant 8-9
Engine oil 8-10
Checking engine oil level 8-10
Changing engine oil 8-11
Changing engine oil filter 8-12
Continuously Variable Transmission (CVT) fluid (if so equipped) 8-13
Power steering fluid 8-14
Brake and clutch (if so equipped) fluid 8-14
Brake fluid 8-15
Clutch fluid (if so equipped) 8-15
Windshield-washer fluid 8-15
Windshield-washer fluid reservoir 8-15
Battery 8-16
Jump starting 8-17
Variable voltage control system 8-18
Drive belt 8-18
Spark plugs 8-19
Replacing spark plugs 8-19
Air cleaner 8-20
In-cabin microfilter 8-21
Windshield wiper blades 8-21
Cleaning 8-21
Replacing 8-21
Brakes 8-22
Self-adjusting brakes 8-22
Brake pad wear indicators 8-22
Fuses 8-23
Engine compartment 8-24
Passenger compartment 8-25
Battery replacement 8-27
NISSAN Intelligent Key™ 8-27
Lights 8-28
Headlights 8-28
Front park/turn/sidemarker light 8-29
Exterior and interior lights 8-30
Upper tether anchor/key cylinder covers 8-36
Removing covers from rear parcel shelf 8-37
Installing covers to rear parcel shelf 8-37

Wheels and tires 8-38
Tire pressure 8-38
Tire labeling 8-42
Types of tires 8-45
Tire chains 8-46
Changing wheels and tires 8-47

Your NISSAN has been designed to have minimum maintenance requirements with long service intervals to save you both time and money. However, some day-to-day and regular maintenance is essential to maintain your NISSAN's good mechanical condition, as well as its emissions and engine performance.

It is the owner's responsibility to make sure that the scheduled maintenance, as well as general maintenance, is performed.

As the vehicle owner, you are the only one who can ensure that your vehicle receives proper maintenance. You are a vital link in the maintenance chain.

Scheduled maintenance

For your convenience, both required and optional scheduled maintenance items are described and listed in your "NISSAN Service and Maintenance Guide". You must refer to that guide to ensure that necessary maintenance is performed on your NISSAN at regular intervals.

General maintenance

General maintenance includes those items which should be checked during normal day-to-day operation. They are essential for proper vehicle operation. It is your responsibility to perform these maintenance procedures regularly as prescribed.

Performing general maintenance checks requires minimal mechanical skill and only a few general automotive tools.

These checks or inspections can be done by you, a qualified technician, or, if you prefer, a NISSAN dealer.

Where to go for service

If maintenance service is required or your vehicle appears to malfunction, have the systems checked and corrected by a NISSAN dealer.

NISSAN technicians are well-trained specialists who are kept up-to-date with the latest service information through technical bulletins, service tips, and in-dealership training programs. They are completely qualified to work on NISSAN vehicles **before** they work on your vehicle, rather than after they have worked on it.

You can be confident that a NISSAN dealer's service department performs the best job to meet the maintenance requirements on your vehicle — in a reliable and economical way.

During the normal day-to-day operation of the vehicle, general maintenance should be performed regularly as prescribed in this section. If you detect any unusual sounds, vibrations or smells, be sure to check for the cause or have a NISSAN dealer do it promptly. In addition, you should notify a NISSAN dealer if you think that repairs are required.

When performing any checks or maintenance work, closely observe the "Maintenance precautions" later in this section.

EXPLANATION OF GENERAL MAINTENANCE ITEMS

Additional information on the following items with " * " is found later in this section.

Outside the vehicle

The maintenance items listed here should be performed from time to time, unless otherwise specified.

Doors and engine hood Check that the doors and engine hood operate properly. Also ensure that all latches lock securely. Lubricate hinges, latches, latch pins, rollers and links as necessary. Make sure that the secondary latch keeps the hood from opening when the primary latch is released.

When driving in areas using road salt or other corrosive materials, check lubrication frequently.

Lights* Clean the headlights on a regular basis. Make sure that the headlights, stop lights, tail lights, turn signal lights, and other lights are all operating properly and installed securely. Also check headlight aim.

Road wheel nuts (lug nuts)* When checking the tires, make sure no wheel nuts are missing, and check for any loose wheel nuts. Tighten if necessary.

Tire rotation* Tires should be rotated every 7,500 miles (12,000 km).

Tires* Check the pressure with a gauge often and always prior to long distance trips. If necessary, adjust the pressure in all tires, including the spare, to the pressure specified. Check carefully for damage, cuts or excessive wear.

Tire Pressure Monitoring System (TPMS) transmitter components Replace the TPMS transmitter grommet seal, valve core and cap when the tires are replaced due to wear or age.

Wheel alignment and balance If the vehicle should pull to either side while driving on a straight and level road, or if you detect uneven or abnormal tire wear, there may be a need for wheel alignment. If the steering wheel or seat vibrates at normal highway speeds, wheel balancing may be needed.

- For additional information regarding tires, refer to “Important Tire Safety Information” (US) or “Tire Safety Information” (Canada) in the Warranty Information Booklet.

Windshield Clean the windshield on a regular basis. Check the windshield at least every six months for cracks or other damage. Have a damaged windshield repaired by a qualified repair facility.

Windshield wiper blades* Check for cracks or wear if they do not wipe properly.

Inside the vehicle

The maintenance items listed here should be checked on a regular basis, such as when performing periodic maintenance, cleaning the vehicle, etc.

Additional information on the following items with an “*” is found later in this section.

Accelerator pedal Check the pedal for smooth operation and make sure the pedal does not bind or require uneven effort. Keep the floor mat away from the pedal.

Brake pedal Check the pedal for smooth operation. If the brake pedal suddenly goes down further than normal, the pedal feels spongy or the vehicle seems to take longer to stop, see a NISSAN dealer immediately. Keep the floor mat away from the pedal.

Brakes Check that the brakes do not pull the vehicle to one side when applied.

Continuously Variable Transmission (CVT) P (Park) position mechanism On a fairly steep hill, check that the vehicle is held securely with the shift selector in the P (Park) position without applying any brakes.

Parking brake Check the parking brake operation regularly. The vehicle should be securely held on a fairly steep hill with only the parking brake applied. If the parking brake needs adjustment, see a NISSAN dealer.

Seats Check seat position controls such as seat adjusters, seatback recliner, etc., to ensure they operate smoothly and all latches lock securely in every position. Check that the head restraints move up and down smoothly and the lock knobs (if so equipped) hold securely in all latched positions.

Seat belts Check that all parts of the seat belt system (for example, buckles, anchors, adjusters and retractors) operate properly and smoothly, and are installed securely. Check the belt webbing for cuts, fraying, wear or damage.

Steering wheel Check for changes in the steering system, such as excessive freeplay, hard steering or strange noises.

Warning lights and chimes Make sure all warning lights and chimes are operating properly.

Windshield wiper and washer* Check that the wipers and washer operate properly and that the wipers do not streak.

Windshield defroster Check that the air comes out of the defroster outlets properly and in sufficient quantity when operating the heater or air conditioner.

Under the hood and vehicle

The maintenance items listed here should be checked periodically (for example, each time you check the engine oil or refuel).

Battery* Check the fluid level in each cell. It should be between the MAX and MIN lines. Vehicles operated in high temperatures or under severe conditions require frequent checks of the battery fluid level.

Brake and clutch fluid levels* Make sure that the brake and clutch fluid level is between the MIN and MAX lines on the reservoir.

Engine coolant level* Check the coolant level when the engine is cold.

Engine drive belts* Make sure the drive belts are not frayed, worn, cracked or oily.

Engine oil level* Check the level after parking the vehicle on a level surface with the engine off. Wait more than 10 minutes for the oil to drain back into the oil pan.

Exhaust system Make sure there are no loose supports, cracks or holes. If the sound of the exhaust seems unusual or there is a smell of exhaust fumes, immediately have the exhaust system inspected by a NISSAN dealer. See “Exhaust gas (carbon monoxide)” in the “Starting and driving” section of this manual.

Fluid leaks Check under the vehicle for fuel, oil, water or other fluid leaks after the vehicle has been parked for a while. Water dripping from the air conditioner after use is normal. If you should notice any leaks or if gasoline fumes are evident, check for the cause and have it corrected immediately.

Power steering fluid level* and lines Check the level when the fluid is cold, with the engine off. Check the lines for proper attachment, leaks, cracks, etc.

Radiator and hoses Check the front of the radiator and clean off any dirt, insects, leaves, etc., that may have accumulated. Make sure the hoses have no cracks, deformation, rot or loose connections.

Underbody The underbody is frequently exposed to corrosive substances such as those used on icy roads or to control dust. It is very important to remove these substances from the underbody, otherwise rust may form on the floor pan, frame, fuel lines and exhaust system. At the end of winter, the underbody should be thoroughly flushed with plain water, in those areas where mud and dirt may have accumulated. See the “Appearance and care” section of this manual.

Windshield–washer fluid* Check that there is adequate fluid in the reservoir.

MAINTENANCE PRECAUTIONS

When performing any inspection or maintenance work on your vehicle, always take care to prevent serious accidental injury to yourself or damage to the vehicle. The following are general precautions which should be closely observed.

⚠ WARNING

- **Park the vehicle on a level surface, apply the parking brake securely and block the wheels to prevent the vehicle from moving. For manual transmission models, move the shift selector to N (Neutral). For CVT models, move the shift selector to P (Park).**
- **Be sure the ignition switch is in the OFF or LOCK position when performing any parts replacement or repairs.**
- **If you must work with the engine running, keep your hands, clothing, hair and tools away from moving fans, belts and any other moving parts.**
- **It is advisable to secure or remove any loose clothing and remove any jewelry, such as rings, watches, etc. before working on your vehicle.**
- **Always wear eye protection whenever you work on your vehicle.**
- **If you must run the engine in an enclosed space such as a garage, be sure there is proper ventilation for exhaust gases to escape.**
- **Never get under the vehicle while it is supported only by a jack. If it is necessary to work under the vehicle, support it with safety stands.**
- **Keep smoking materials, flame and sparks away from the fuel tank and battery.**
- **On gasoline engine models, the fuel filter or fuel lines should be serviced by a NISSAN dealer because the fuel lines are under high pressure even when the engine is off.**

⚠ CAUTION

- **Do not work under the hood while the engine is hot. Turn the engine off and wait until it cools down.**
- **Avoid contact with used engine oil and coolant. Improperly disposed engine oil, engine coolant and/or other vehicle fluids can damage the environment. Always conform to local regulations for disposal of vehicle fluid.**
- **Never leave the engine or the CVT related component harness connector disconnected while the ignition switch is in the ON position.**
- **Never connect or disconnect the battery or any transistorized component while the ignition switch is in the ON position.**
- **Your vehicle is equipped with an automatic engine cooling fan. It may come on at any time without warning, even if the ignition key is in the OFF position and the engine is not running. To avoid injury, always disconnect the negative battery cable before working near the fan.**

This “Maintenance and do-it-yourself” section gives instructions regarding only those items which are relatively easy for an owner to perform.

A genuine NISSAN service manual is also available. See “Owner’s Manual/Service Manual order information” in the “Technical and consumer information” section of this manual.

You should be aware that incomplete or improper servicing may result in operating difficulties or excessive emissions, and could affect warranty coverage. **If in doubt about any servicing, have it done by a NISSAN dealer.**

ENGINE COMPARTMENT CHECK LOCATIONS

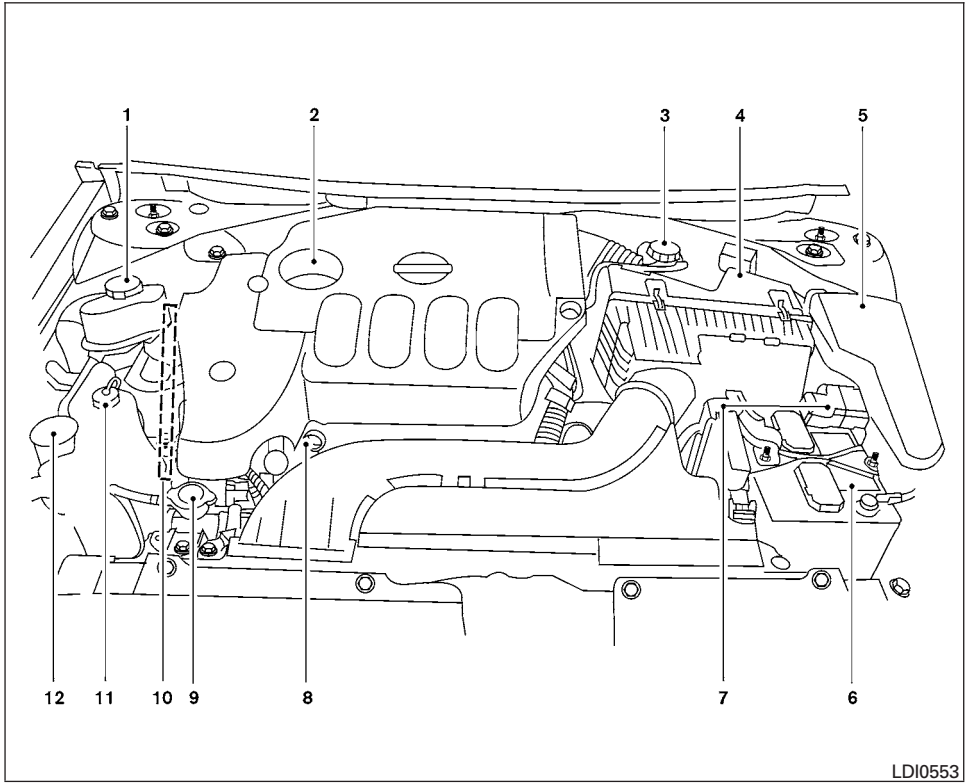

QR25DE engine

1. Power steering fluid reservoir
2. Engine oil filler cap
3. Brake fluid reservoir/Clutch fluid reservoir (M/T model)
4. Air cleaner
5. Fuse block
6. Battery
7. Fuse/Fusible link box
8. Engine oil dipstick
9. Radiator cap
10. Drive belt location
11. Engine coolant reservoir
12. Windshield-washer fluid reservoir

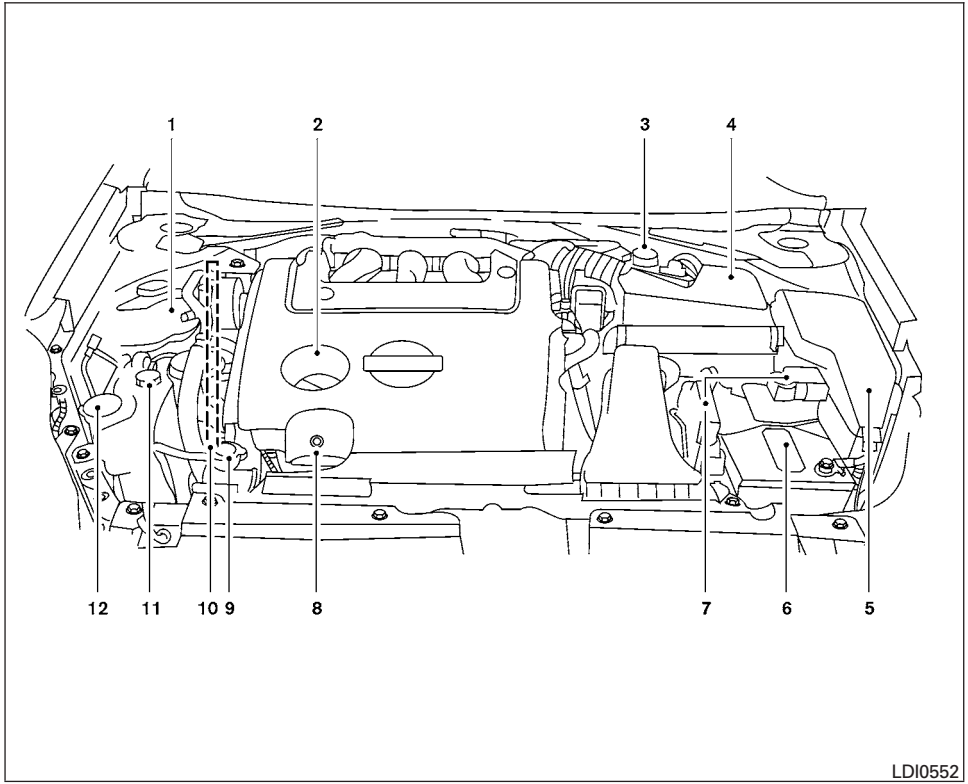

VQ35DE engine

1. Power steering fluid reservoir
2. Engine oil filler cap
3. Brake fluid reservoir/Clutch fluid reservoir (M/T model)
4. Air cleaner
5. Fuse block
6. Battery
7. Fuse/Fusible link box
8. Engine oil dipstick
9. Radiator cap
10. Drive belt location
11. Engine coolant reservoir
12. Windshield-washer fluid reservoir

ENGINE COOLING SYSTEM

The engine cooling system is filled at the factory with a pre-diluted mixture of 50% Genuine NISSAN Engine Coolant (blue) and 50% water to provide year-round anti-freeze and coolant protection. The anti-freeze solution contains rust and corrosion inhibitors. Additional engine cooling system additives are not necessary.

⚠ WARNING

- **Never remove the radiator or coolant reservoir cap when the engine is hot. Wait until the engine and radiator cool down. Serious burns could be caused by high pressure fluid escaping from the radiator. See precautions in "If your vehicle overheats" found in the "In case of emergency" section of this manual.**
- **The radiator is equipped with a pressure type radiator cap. To prevent engine damage, use only a genuine NISSAN radiator cap.**

⚠ CAUTION

- **When adding or replacing coolant, be sure to use only Genuine NISSAN Long Life Antifreeze/Coolant (blue) or equivalent. Genuine NISSAN Long Life Antifreeze/Coolant (blue) is pre-diluted to provide antifreeze protection to -34° F (-37° C). If additional freeze protection is needed due to weather where you operate your vehicle, add Genuine NISSAN Long Life Antifreeze/Coolant (blue) concentrate following the directions on the container. If an equivalent coolant other than Genuine NISSAN Long Life Antifreeze/Coolant (blue) is used, follow the coolant manufacturer's instructions to maintain minimum antifreeze protection to -34° F (-37° C). The use of other types of coolant solutions other than Genuine NISSAN Long Life Antifreeze/Coolant (blue) or equivalent may damage the engine cooling system.**
- **The life expectancy of the factory-fill coolant is 105,000 miles (168,000 km) or 7 years. Mixing any other type of coolant other than Genuine NISSAN Long Life Antifreeze/Coolant (blue), including Genuine NISSAN Long Life Antifreeze/Coolant (green), or the use of non-distilled water will reduce the life expectancy of the factory-fill coolant. Refer to the Nissan Service and Maintenance Guide for more details.**

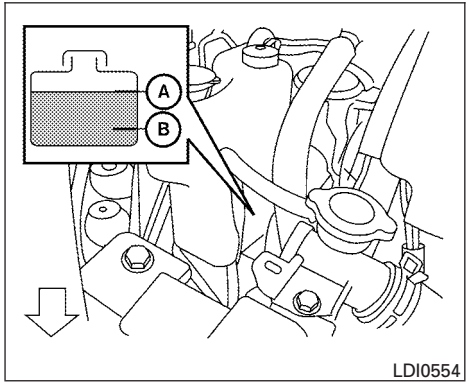

CHECKING ENGINE COOLANT LEVEL

Check the coolant level **in the reservoir when the engine is cold.** If the coolant level is below the MIN level Ⓑ, add coolant to the MAX level Ⓐ. If the reservoir is empty, check the coolant level in the radiator **when the engine is cold.** If there is insufficient coolant in the radiator, fill the radiator with coolant up to the filler opening and also add it to the reservoir up to the MAX level Ⓐ.

This vehicle contains Genuine NISSAN Long Life Antifreeze/Coolant (blue). The life expectancy of the factory-fill coolant is 105,000 miles (168,000 km) or 7 years. Mixing any other type of coolant or the use of non-distilled water will reduce the life expectancy of the factory-fill coolant. Refer to the NISSAN Service and Maintenance Guide for more details.

If the cooling system frequently requires coolant, have it checked by a NISSAN dealer.

CHANGING ENGINE COOLANT

A NISSAN dealer can change the engine coolant. The service procedure can be found in the NISSAN Service Manual.

Improper servicing can result in reduced heater performance and engine overheating.

⚠ WARNING

- **To avoid the danger of being scalded, never change the coolant when the engine is hot.**
- **Never remove the radiator cap when the engine is hot. Serious burns could be caused by high pressure fluid escaping from the radiator.**
- **Avoid direct skin contact with used coolant. If skin contact is made, wash thoroughly with soap or hand cleaner as soon as possible.**
- **Keep coolant out of the reach of children and pets.**

Engine coolant must be disposed of properly. Check your local regulations.

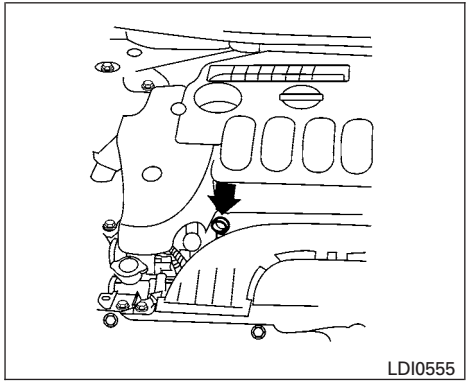

QR25DE engine

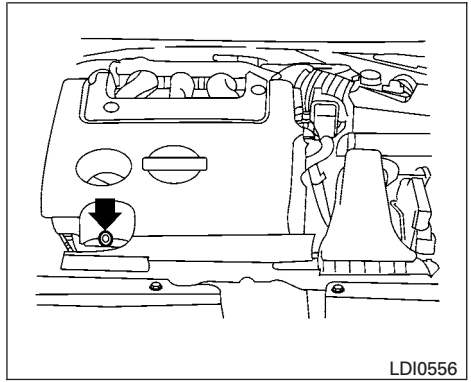

VQ35DE engine

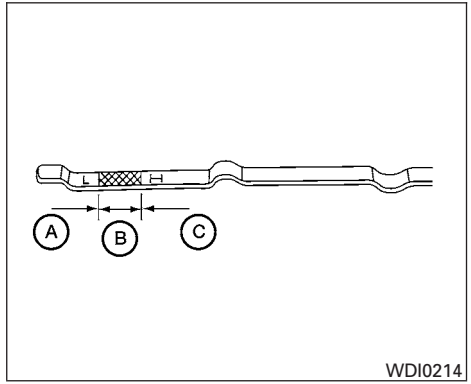

CHECKING ENGINE OIL LEVEL

1. Park the vehicle on a level surface and apply the parking brake.
2. Start the engine and let it idle until it reaches operating temperature.
3. Turn off the engine. **Wait more than 10 minutes for the oil to drain back into the oil pan.**
4. Remove the dipstick and wipe it clean. Reinsert it all the way.
5. Remove the dipstick again and check the oil level. It should be between the H (High) and L (Low) marks Ⓑ. This is the normal operating oil level range. If the oil level is below the L (Low) mark Ⓐ, remove the oil filler cap and pour recommended oil through the opening. **Do not overfill Ⓒ.**
6. Recheck oil level with the dipstick.

It is normal to add some oil between oil maintenance intervals or during the break-in period, depending on the severity of operating conditions.

⚠ CAUTION

Oil level should be checked regularly. Operating the engine with an insufficient amount of oil can damage the engine, and such damage is not covered by warranty.

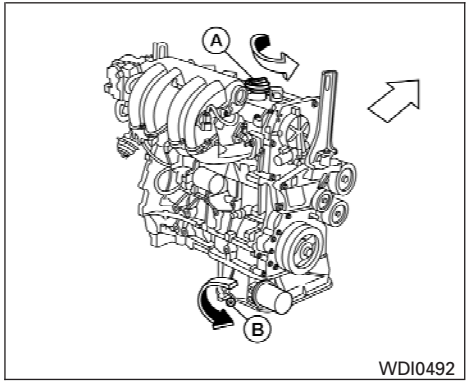

QR25DE

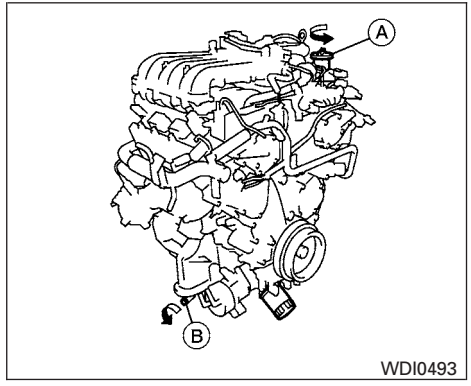

VQ35DE

CHANGING ENGINE OIL

1. Park the vehicle on a level surface and apply the parking brake.
2. Start the engine and let it idle until it reaches operating temperature, then turn it off.
3. Remove the oil filler Ⓐ cap by turning it counterclockwise.
4. Place a large drain pan under the drain plug Ⓑ.
5. Remove the drain plug Ⓑ with a wrench by turning it counterclockwise and completely drain the oil.

   If the oil filter is to be changed, remove and replace it at this time. See “Changing engine oil filter” in this section.

- **Waste oil must be disposed of properly.**
- **Check your local regulations.**

⚠ WARNING

- **Prolonged and repeated contact with used engine oil may cause skin cancer.**
- **Try to avoid direct skin contact with used oil. If skin contact is made, wash thoroughly with soap or hand cleaner as soon as possible.**
- **Keep used engine oil out of reach of children.**

⚠ CAUTION

Be careful not to burn yourself. The engine oil may be hot.

6. Clean and reinstall the drain plug and a new washer. Securely tighten the drain plug with a wrench. Do not use excessive force.

   Drain plug tightening torque:
   22 - 29 ft-lb (29 - 39 N·m)

7. Refill engine with recommended oil through the oil filler opening, then install the oil filler cap securely.

   See "Capacities and recommended fuel/lubricants" in the "Technical and consumer information" section of this manual for drain and refill capacity.

   The drain and refill capacity depends on the oil temperature and drain time. Use these specifications for reference only. Always use the dipstick to determine when the proper amount of oil is in the engine.

8. Start the engine. Check for leakage around the drain plug and oil filter. Correct as required.

9. Turn the engine off and wait more than 10 minutes. Check the oil level with the dipstick. Add engine oil if necessary.

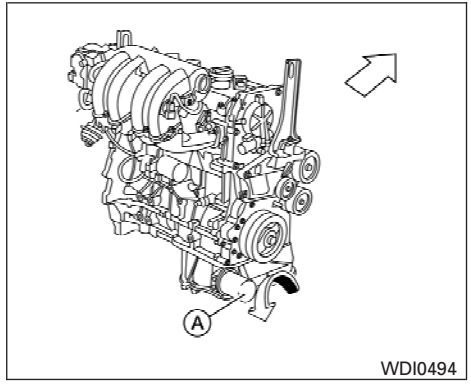

QR25DE

CHANGING ENGINE OIL FILTER

1. Park the vehicle on a level surface and apply the parking brake.
2. Turn the engine off.
3. Place a large drain pan under the oil filter Ⓐ.
4. Loosen the oil filter Ⓐ with an oil filter wrench by turning it counterclockwise. Then remove the oil filter by turning it by hand.

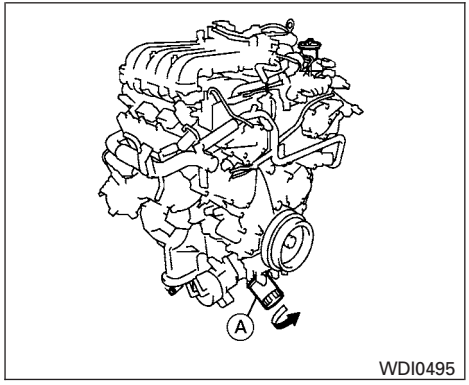

VQ35DE

⚠ CAUTION

Be careful not to burn yourself. The engine oil may be hot.

5. Wipe the engine oil filter sealing surface with a clean rag.

⚠ CAUTION

Be sure to remove any old gasket material remaining on the sealing surface of the engine. Failure to do so could lead to engine damage.

6. Coat the gasket on the new filter with clean engine oil.
7. Screw on the oil filter until a slight resistance is felt, then tighten an additional 2/3 turn.
8. Start the engine and check for leakage around the oil filter. Correct as required.
9. Turn the engine off and wait more than 10 minutes. Check the oil level. Add engine oil if necessary.

CONTINUOUSLY VARIABLE TRANSMISSION (CVT) FLUID (if so equipped)

⚠ CAUTION

- **Use only Genuine NISSAN CVT Fluid NS-2. Do not mix with other fluids.**
- **Using transmission fluid other than Genuine NISSAN CVT Fluid NS-2 will damage the CVT, which is not covered by the warranty.**

When checking or replacement of CVT fluid is required, we recommend your NISSAN dealer for servicing.

POWER STEERING FLUID

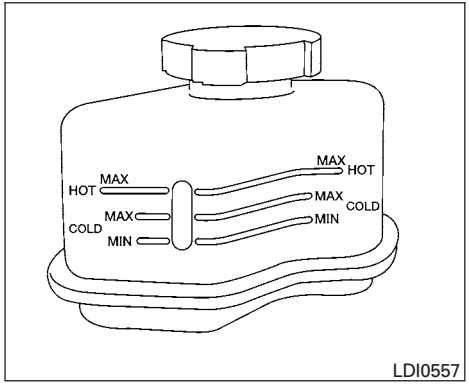

The fluid level should be checked using the HOT MAX range on the power steering fluid reservoir at fluid temperatures of 122° - 176°F (50° - 80°C) or using the COLD MAX range on the power steering fluid reservoir at fluid temperatures of 32° - 86°F (0° - 30°C).

If the fluid is at or below the MIN line, add Genuine NISSAN PSF to HOT MAX or COLD MAX depending on system fluid temperature. Remove the cap and fill through the opening.

⚠ CAUTION

- **DO NOT OVERFILL.**
- **Recommended fluid is Genuine NISSAN PSF or equivalent.**

BRAKE AND CLUTCH (if so equipped) FLUID

For further brake and clutch fluid specification information, refer to “Capacities and recommended fuel/lubricants” in the “Technical and consumer information” section of this manual.

⚠ WARNING

- **Use only new fluid from a sealed container. Old, inferior or contaminated fluid may damage the brake and clutch systems. The use of improper fluids can damage the brake and clutch system and affect the vehicle’s stopping ability.**
- **Clean the filler cap before removing.**
- **Brake and clutch fluid is poisonous and should be stored carefully in marked containers out of reach of children.**

⚠ CAUTION

Do not spill the fluid on any painted surfaces. This will damage the paint. If fluid is spilled, immediately wash the surface with water.

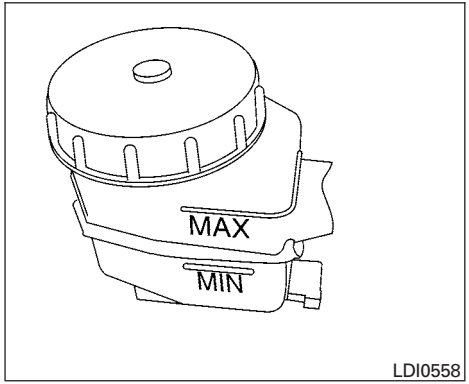

BRAKE FLUID

Check the brake fluid level in the reservoir. If the fluid level is below the MIN line or the brake warning light comes on, add Genuine NISSAN Super Heavy Duty Brake Fluid or equivalent **DOT 3** fluid up to the MAX line. If fluid must be added frequently, the system should be checked by a NISSAN dealer.

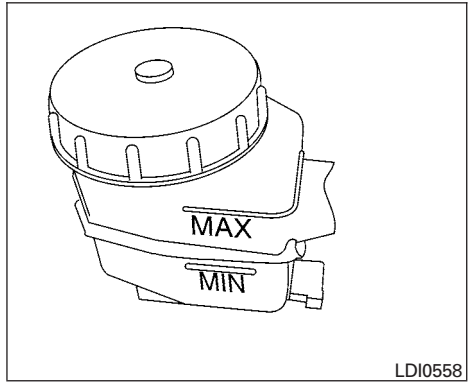

CLUTCH FLUID (if so equipped)

Check the clutch fluid level in the reservoir (manual transmissions only). If the fluid level is below the MIN line, add Genuine NISSAN Super Heavy Duty Brake Fluid or equivalent **DOT 3** fluid up to the MAX line. If fluid must be added frequently, the system should be checked by a NISSAN dealer.

For further brake and clutch fluid specification information, refer to “Capacities and recommended fuel/lubricants” in the “Technical and consumer information” section of this manual.

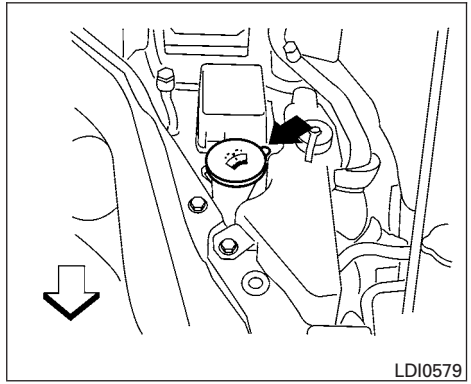

WINDSHIELD-WASHER FLUID RESERVOIR

Fill the windshield-washer fluid reservoir periodically. Add windshield-washer fluid when the low windshield-washer fluid warning light comes on.

To fill the windshield-washer fluid reservoir, lift the cap off the reservoir and pour the windshield-washer fluid into the reservoir opening.

Add a washer solvent to the washer for better cleaning. In the winter season, add a windshield washer antifreeze. Follow the manufacturer’s instructions for the mixture ratio.

Refill the reservoir more frequently when driving conditions require an increased amount of windshield-washer fluid.

Recommended fluid is Genuine NISSAN Windshield Washer Concentrate Cleaner & Anti-freeze or equivalent.

⚠ CAUTION

- **Do not substitute engine anti-freeze coolant for windshield-washer fluid. This may result in damage to the paint.**
- **Do not fill the windshield-washer fluid reservoir with washer fluid concentrates at full strength. Some methyl alcohol based washer fluid concentrates may permanently stain the grille if spilled while filling the windshield-washer fluid reservoir.**
- **Pre-mix washer fluid concentrates with water to the manufacturer's recommended levels before pouring the fluid into the windshield-washer fluid reservoir. Do not use the windshield-washer fluid reservoir to mix the washer fluid concentrate and water.**

- Keep the battery surface clean and dry. Clean the battery with a solution of baking soda and water.
- Make certain the terminal connections are clean and securely tightened.
- If the vehicle is not to be used for 30 days or longer, disconnect the negative (-) battery terminal cable to prevent discharge.

⚠ WARNING

- **Do not expose the battery to flames, an electrical spark or a cigarette. Hydrogen gas generated by the battery is explosive. Explosive gases can cause blindness or injury. Do not allow battery fluid to contact your skin, eyes, fabrics or painted surfaces. Sulfuric acid can cause blindness or injury. After touching a battery or battery cap, do not touch or rub your eyes. Thoroughly wash your hands. If the acid contacts your eyes, skin or clothing, immediately flush with water for at least 15 minutes and seek medical attention.**
- **Do not operate the vehicle if the fluid in the battery is low. Low battery fluid can cause a higher load on the battery which can generate heat, reduce battery life, and in some cases lead to an explosion.**
- **When working on or near a battery, always wear suitable eye protection and remove all jewelry.**
- **Battery posts, terminals and related accessories contain lead and lead compounds. Wash hands after handling.**
- **Keep battery out of the reach of children.**
- **Do not tip the battery. Keep the vent caps tight and the battery level.**

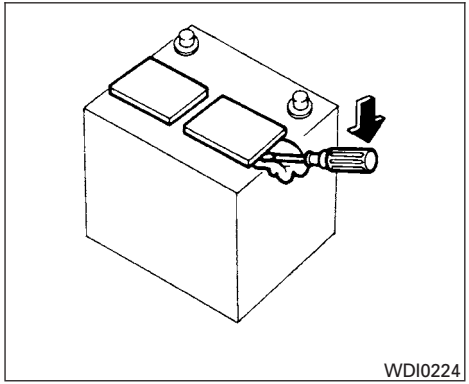

1. Remove the vent caps with a screwdriver as shown. Use a cloth to protect the battery case.

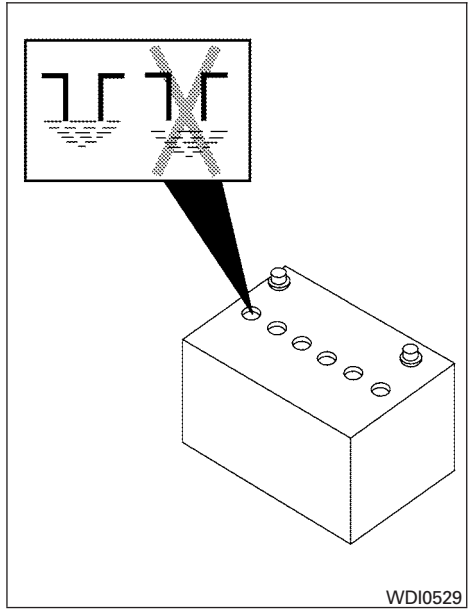

2. Check the fluid level in each cell. If it is necessary to add fluid, add only distilled water to bring the level up to the bottom of the filler opening. **Do not overfill.** Reinstall the vent caps.

Vehicles operated in high temperatures or under severe conditions require frequent checks of the battery fluid level.

JUMP STARTING

If jump starting is necessary, see “Jump starting” in the “In case of emergency” section of this manual. If the engine does not start by jump starting, the battery may have to be replaced. Contact a NISSAN dealer.

VARIABLE VOLTAGE CONTROL SYSTEM

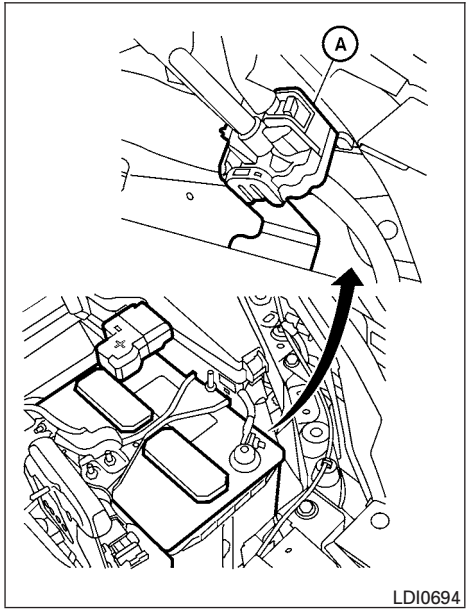

⚠ CAUTION

- **Do not ground accessories directly to the battery terminal. Doing so will bypass the variable voltage control system and the vehicle battery may not charge completely.**
- **Use electrical accessories with the engine running to avoid discharging the vehicle battery.**

Your vehicle is equipped with a variable voltage control system. This system measures the amount of electrical discharge from the battery and controls voltage generated by the generator.

The current sensor Ⓐ is located near the battery along the negative battery cable. If you add electrical accessories to your vehicle, be sure to ground them to a suitable body ground such as the frame or engine block area.

DRIVE BELT

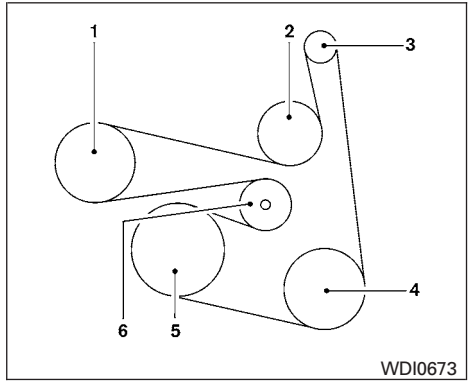

QR25DE engine

1. Power steering fluid pump pulley
2. Water pump pulley
3. Generator
4. Air conditioner
5. Crankshaft pulley
6. Drive belt Automatic tensioner

⚠ WARNING

Be sure the ignition switch is placed in the OFF or LOCK position before servicing drive belt. The engine could rotate unexpectedly.

1. Visually inspect the belt for signs of unusual wear, cuts, fraying or looseness. If the belt is in poor condition or is loose, have it replaced or adjusted by a NISSAN dealer.
2. Have the belt checked regularly for condition and tension in accordance with the maintenance schedule found in the “NISSAN Service and Maintenance Guide”.

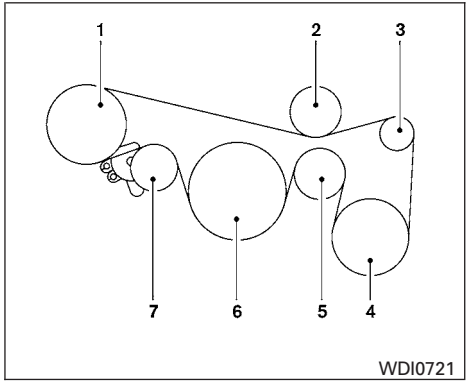

VQ35DE engine

1. Power steering fluid pump pulley
2. Idler pulley
3. Generator
4. Air conditioner
5. Idler pulley
6. Crankshaft pulley
7. Drive belt Automatic tensioner

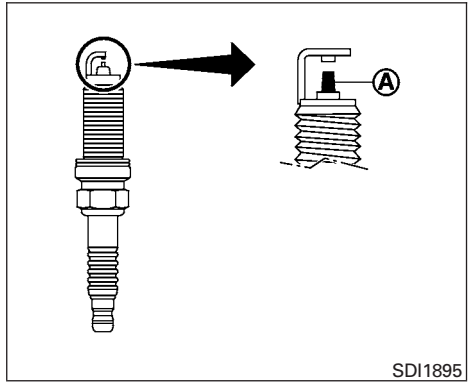

REPLACING SPARK PLUGS

Platinum-tipped spark plugs

It is not necessary to replace platinum-tipped Ⓐ spark plugs as frequently as conventional type spark plugs because they last much longer. Follow the maintenance log shown in the “NISSAN Service and Maintenance Guide”. Do not service platinum-tipped spark plugs by cleaning or regapping.

- **Always replace spark plugs with recommended or equivalent ones.**

⚠ WARNING

Be sure the engine and ignition switch are off and that the parking brake is engaged securely.

⚠ CAUTION

Be sure to use the correct socket to remove the spark plugs. An incorrect socket can damage the spark plugs.

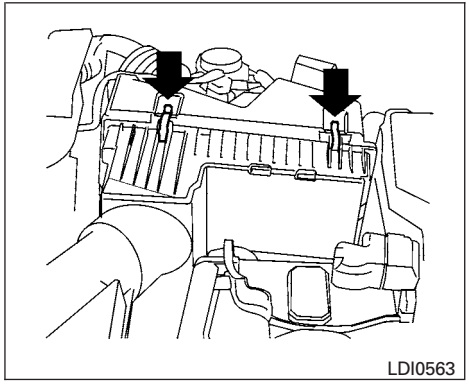

QR25DE

NOTE:

The air cleaner filter should not be cleaned and reused.

Replace the air cleaner filter according to the maintenance log shown in the "Warranty Information and Maintenance Booklet."

To remove the air cleaner filter:

① Unlatch the clips and move the air cleaner cover upward.

② Remove the air cleaner filter.

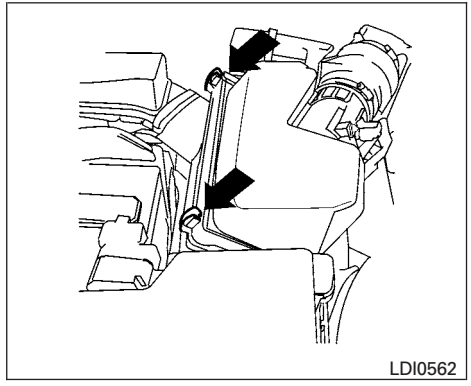

VQ35DE

③ Wipe the inside of the air cleaner filter housing and the cover with a damp cloth.

NOTE:

After installing a new air cleaner, make sure the air cleaner cover is seated in the housing and latch the clips.

⚠ WARNING

- **Operating the engine with the air cleaner removed can cause you or others to be burned. The air cleaner not only cleans the air, it stops the flame if the engine backfires. If it isn't there, and the engine backfires, you could be burned. Do not drive with the air cleaner removed, and be careful when working on the engine with the air cleaner removed.**
- **Never pour fuel into the throttle body or attempt to start the engine with the air cleaner removed. Doing so could result in serious injury.**

IN-CABIN MICROFILTER

The in-cabin microfilter restricts the entry of airborne dust and pollen particles and reduces some objectionable outside odors. The filter is located behind the glove box. Refer to the "NISSAN Service and Maintenance Guide" for change intervals.

If replacement is required, see your NISSAN dealer.

CLEANING

If your windshield is not clear after using the windshield washer or if a wiper blade chatters when running, wax or other material may be on the blade or windshield.

Clean the outside of the windshield with a washer fluid or a mild detergent. Your windshield is clean if beads do not form when rinsing with clear water.

Clean each blade by wiping it with a cloth soaked in a washer fluid or a mild detergent. Then rinse the blades with clear water. If your windshield is still not clear after cleaning the blades and using the wiper, install new windshield wiper blades.

⚠ CAUTION

Worn windshield wiper blades can damage the windshield and impair driver vision.

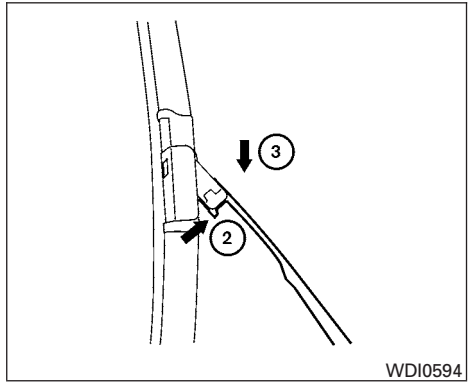

WDI0594

REPLACING

Replace the wiper blades if they are worn.

1. Lift the wiper arm away from the windshield.

② Push the release tab, then move the wiper blade down the wiper arm to remove.

③ Remove the wiper blade.

4. Insert the new wiper blade onto the wiper arm until it clicks into place.
5. Rotate wiper blade so the dimple is in the groove.

6. Return the wiper to its original position and release it until it has made contact with the windshield.

⚠ CAUTION

- **After wiper blade replacement, return the wiper arm to its original position; otherwise it may be damaged when the hood is opened.**
- **Make sure the wiper blades contact the glass; otherwise the arms may be damaged from wind pressure.**

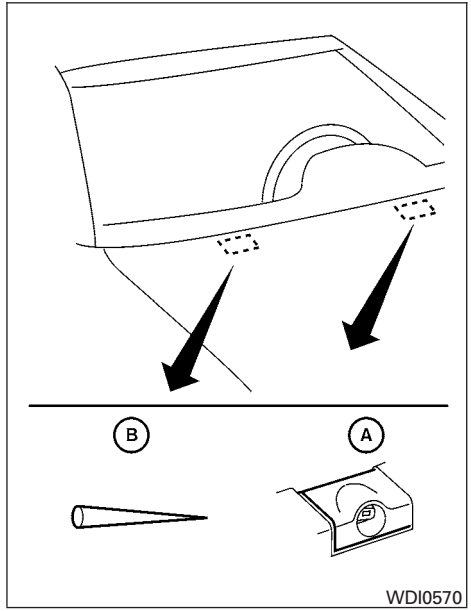

If you wax the surface of the hood, be careful not to let wax get into the windshield washer nozzle Ⓐ. This may cause clogging or improper windshield washer operation. If wax gets into the nozzle, remove it with a needle or small pin Ⓑ.

If the brakes do not operate properly, have the brakes checked by a NISSAN dealer.

SELF-ADJUSTING BRAKES

Your vehicle is equipped with self-adjusting brakes.

The front and rear disc-type brakes self-adjust every time the brake pedal is applied.

⚠ WARNING

See a NISSAN dealer for a brake system check if the brake pedal height does not return to normal.

BRAKE PAD WEAR INDICATORS

The disc brake pads on your vehicle have audible wear indicators. When a brake pad requires replacement, a high pitched scraping or screeching sound will be heard when the vehicle is in motion. The noise will be heard whether or not the brake pedal is depressed. Have the brakes checked as soon as possible if the wear indicator sound is heard.

Under some driving or climate conditions, occasional brake squeak, squeal or other noise may be heard. Occasional brake noise during light to moderate stops is normal and does not affect the function or performance of the brake system.

Proper brake inspection intervals should be followed. For more information regarding brake inspections, see the appropriate maintenance schedule information in the “NISSAN Service and Maintenance Guide”.

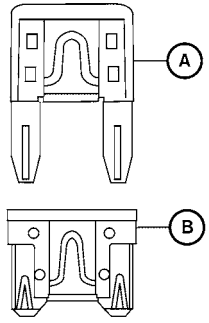

LDI0455

Two types of fuses are used. Type Ⓐ is used in the fuse boxes in the engine compartment. Type Ⓑ is used in the passenger compartment fuse box.

Type A fuses are provided as spare fuses. They are stored in the passenger compartment fuse box.

Type A fuses can be installed in the engine compartment and passenger compartment fuse boxes.

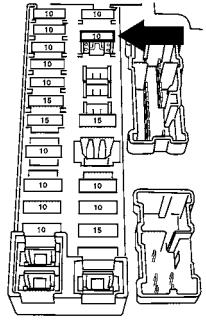

LDI0457

If a type A fuse is used to replace a type B fuse, the type A fuse will not be level with the fuse pocket as shown in the illustration. This will not affect the performance of the fuse. Make sure the fuse is installed in the fuse box securely.

Type B fuses cannot be installed in the underhood fuse boxes. Only use type A fuses in the underhood fuse boxes.

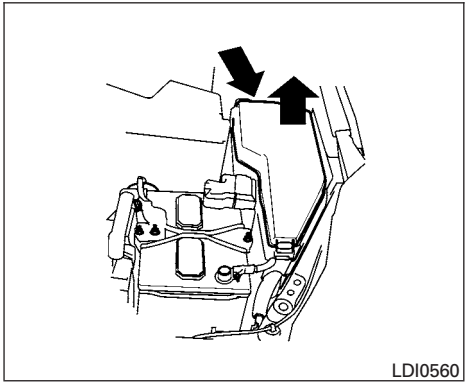

ENGINE COMPARTMENT

⚠ CAUTION

Never use a fuse of a higher or lower amperage rating than specified on the fuse box cover. This could damage the electrical system or cause a fire.

If any electrical equipment does not come on, check for an open fuse.

1. Be sure the ignition switch and the headlight switch are OFF.
2. Open the engine hood.
3. Remove the fuse box cover by pushing the tab and lifting the cover up.
4. Remove the fuse with the fuse puller. The fuse puller is located in the center of the fuse block in the passenger compartment.

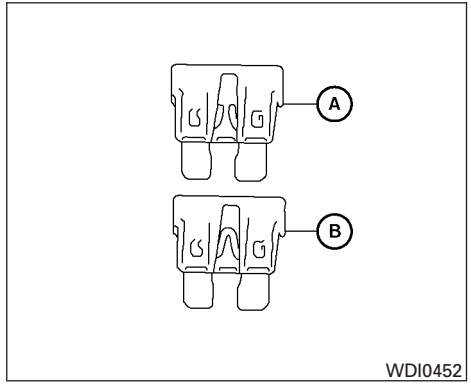

5. If the fuse is open Ⓐ, replace it with a new fuse Ⓑ.
6. If a new fuse also opens, have the electrical system checked and repaired by a NISSAN dealer.

Fusible links

If the electrical equipment does not operate and fuses are in good condition, check the fusible links. If any of these fusible links are melted, replace with only Genuine NISSAN parts.

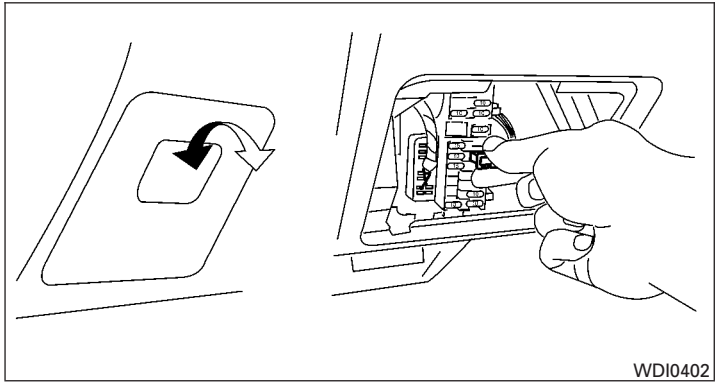

PASSENGER COMPARTMENT

⚠ CAUTION

Never use a fuse of a higher or lower amperage rating than specified on the fuse box cover. This could damage the electrical system or cause a fire.

If any electrical equipment does not operate, check for an open fuse.

1. Be sure the ignition switch and the headlight switch are OFF.
2. Pull the fuse box cover to remove.
3. Remove the fuse with the fuse puller.

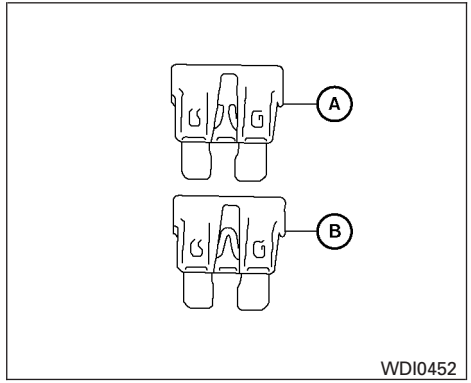

Type A

4. If the fuse is open Ⓐ, replace it with an equivalent good fuse Ⓑ.
5. Push the fuse box cover to install.
6. If a new fuse also opens, have the electrical system checked and repaired by a NISSAN dealer.

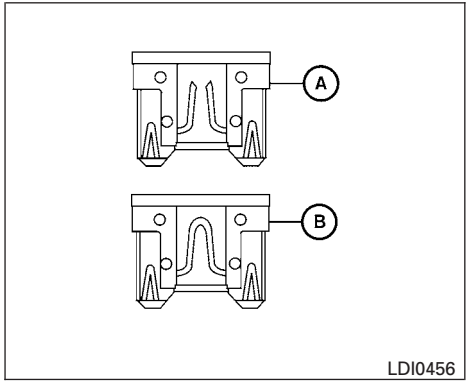

Type B

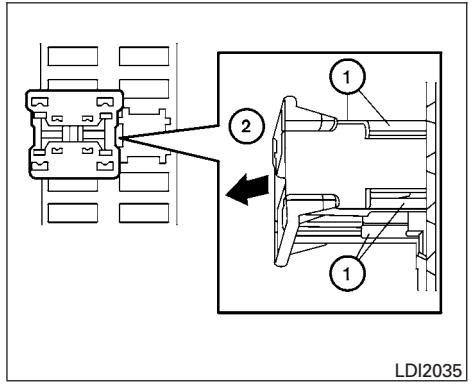

Extended storage switch (if so equipped)

If any electrical equipment does not operate, remove the extended storage switch and check for an open fuse.

NOTE:

The extended storage switch is used for long term vehicle storage. Even if the extended storage switch is broken it is not necessary to replace it. Replace only the open fuse in the switch with a new fuse.

How to replace the extended storage switch:

1. To remove the extended storage switch, be sure the ignition switch is in the OFF or LOCK position.
2. Be sure the headlight switch is in the OFF position.
3. Remove the fuse box cover.
4. Pinch the locking tabs ① found on each side of the storage switch.
5. Pull the storage switch straight out from the fuse box ②.

BATTERY REPLACEMENT

⚠ CAUTION

Be careful not to allow children to swallow the battery or removed parts.

NISSAN INTELLIGENT KEY™

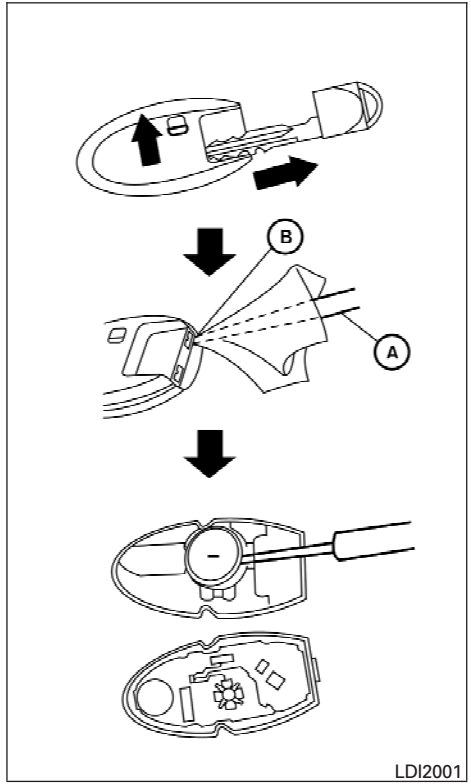

Replace the battery in the Intelligent Key as follows:

1. Remove the mechanical key from the Intelligent Key.
2. Insert a small screwdriver Ⓐ into the slit Ⓑ of the corner and twist it to separate the upper part from the lower part. Use a cloth to protect the casing.
3. Replace the battery with a new one.

   Recommended battery: CR2032 or equivalent.

   - Do not touch the internal circuit and electric terminals as doing so could cause a malfunction.
   - Hold the battery by the edges. Holding the battery across the contact points will seriously deplete the storage capacity.
   - Make sure that the + side faces the bottom of the case.

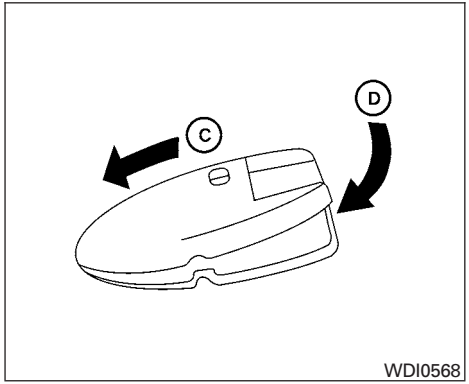

4. Close the lid securely as illustrated Ⓒ Ⓓ.
5. Operate the buttons to check the operation.

See a NISSAN dealer if you need assistance for replacement.

FCC Notice:
Changes or modifications not expressly approved by the party responsible for compliance could void the user's authority to operate the equipment.

This device complies with Part 15 of the FCC Rules and RSS-210 of Industry Canada.

Operation is subject to the following two conditions: (1) This device may not cause harmful interference, and (2) this device must accept any interference received, including interference that may cause undesired operation of the device.

HEADLIGHTS

Replacing the xenon headlight bulb (if so equipped)

⚠ WARNING
⚠ HIGH VOLTAGE

When xenon headlights are on, they produce a high voltage. To prevent an electric shock, never attempt to modify or disassemble. Always have your xenon headlights replaced at a NISSAN dealer. For additional information, see "Headlight and turn signal switch" in the "Instruments and controls" section.

Replacing the halogen headlight bulb (if so equipped)

The headlight is a semi-sealed beam type which uses a replaceable headlight (halogen) bulb. Because the headlight assembly must be removed from the vehicle for bulb replacement, see your NISSAN dealer.

⚠ CAUTION

- **Aiming is not necessary after replacing the bulb. When aiming adjustment is necessary, contact a NISSAN dealer.**
- **Do not leave the headlight assembly open without a bulb installed for a long period of time. Dust, moisture, smoke, etc. entering the headlight body may affect bulb performance. Remove the bulb from the headlight assembly just before a replacement bulb is installed.**
- **Only touch the base when handling the bulb. Never touch the glass envelope. Touching the glass could significantly affect bulb life and/or headlight performance.**
- **High pressure halogen gas is sealed inside the halogen bulb. The bulb may break if the glass envelope is scratched or the bulb is dropped.**
- **Use the same number and wattage as shown in the chart.**

Fog may temporarily form inside the lens of the exterior lights in the rain or in a car wash. A temperature difference between the inside and the outside of the lens causes the fog. This is not a malfunction. If large drops of water collect inside the lens, contact a NISSAN dealer.

FRONT PARK/TURN/SIDEMARKER LIGHT

Bulb replacement requires the removal of the headlight assembly. If replacement is required, see your NISSAN dealer.

EXTERIOR AND INTERIOR LIGHTS

Item	Wattage (W)	Bulb No.*1
Headlight assembly *2		
Low (Halogen)	55	H11
Low (Xenon)	35	D2R
High	65	H9
Park	5	WY5W
Park/Turn	28/8	3457NAK
Sidemarker		
Sedan	5	WY5W
Coupe	5	W5W
Front fog light (if so equipped) *2	55	H11
Step light	3.8	194
Rear combination light		
Tail/Stop	27/8	3157K
Turn	27	3156
Backup (reversing)		
Sedan	16	921LF
Coupe	13	912
License plate light *2	5	W5W
High-mounted stop light *2		
Inside (coupe)	—	LED
Inside (sedan)	18	921
Spoiler (if so equipped)	—	LED
Front map light	8	U89
Rear personal light	8	U88
Trunk light	3.4	158
Vanity mirror light	—	HTU–14v
Glove box light *2	—	—
Console light *2	—	—

*1 Always check with the Parts Department at a NISSAN dealer for the latest parts information.

*2 See a NISSAN dealer for assistance.

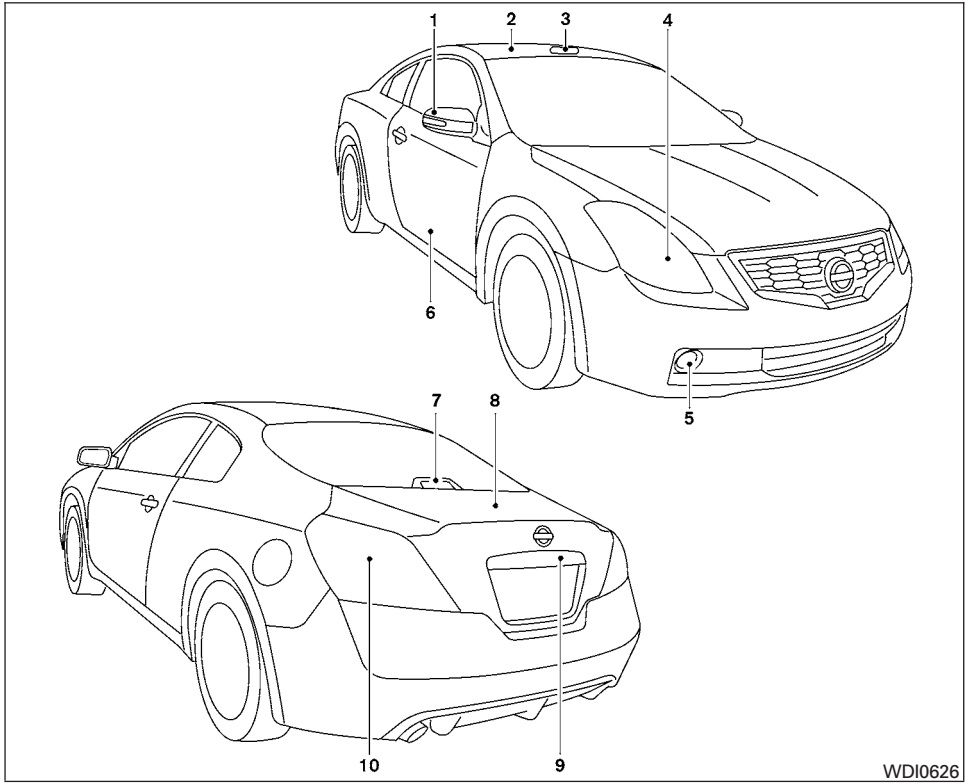

Coupe

1. Mirror-mounted turn signal light (if so equipped)
2. Interior light
3. Map light
4. Headlamp assembly
5. Fog light (if so equipped)
6. Step light
7. High-mount stoplight
8. Trunk light
9. License plate light
10. Rear combination light

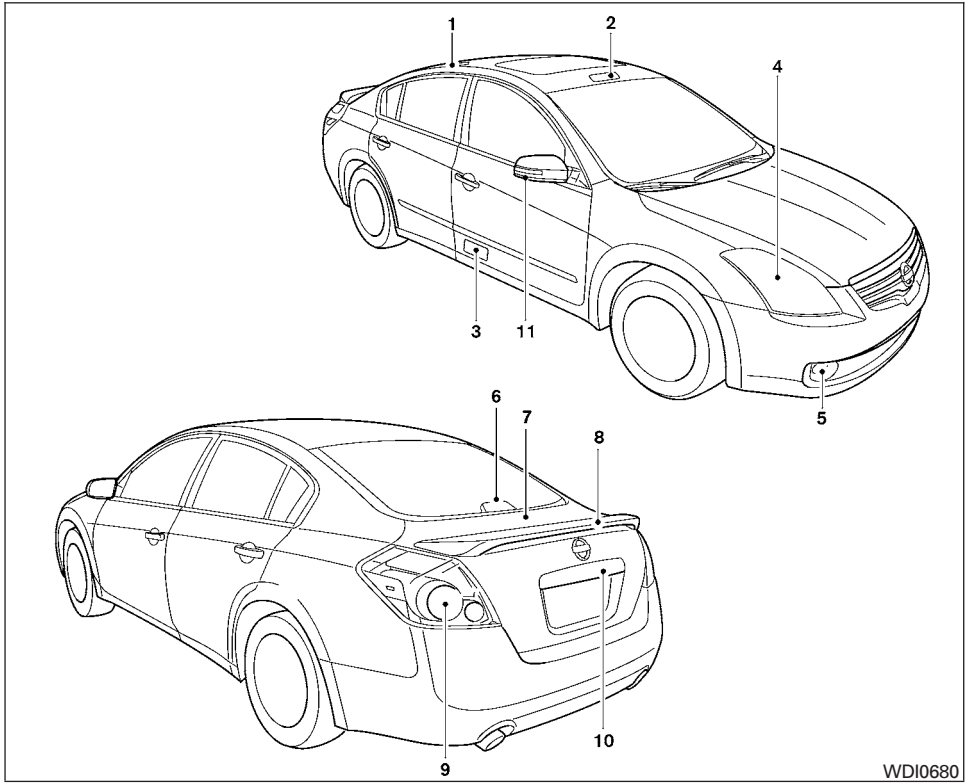

Sedan

1. Rear map light
2. Front map light
3. Step light
4. Headlamp assembly
5. Fog light (if so equipped)
6. High-mount stoplight (if so equipped)
7. Trunk light
8. Spoiler mounted stoplight (if so equipped)
9. Rear combination light
10. License plate light
11. Mirror-mounted turn signal light (if so equipped)

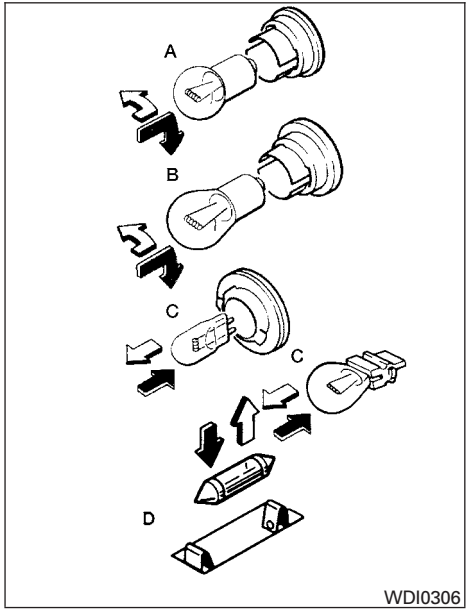

Replacement procedures

All other lights are either type A, B, C or D. When replacing a bulb, first remove the lens, light and/or cover.

⇧ Indicates bulb removal

⬆ Indicates bulb installation

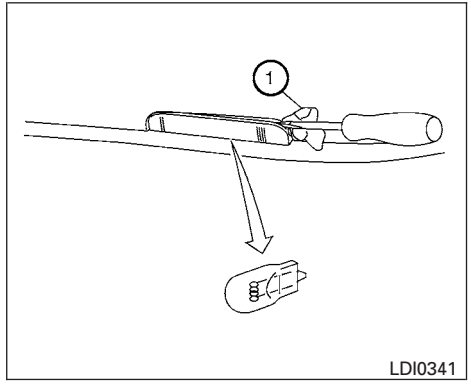

Step light

Use a cloth ① to protect the housing.

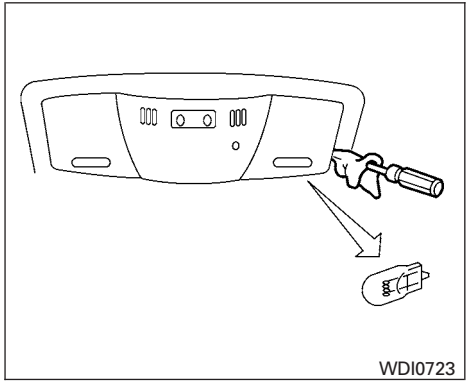

Map light

Use a cloth to protect the housing.

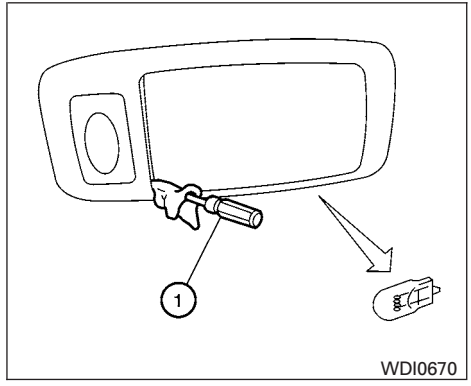

Personal light (if so equipped)

Use a cloth ① to protect the housing.

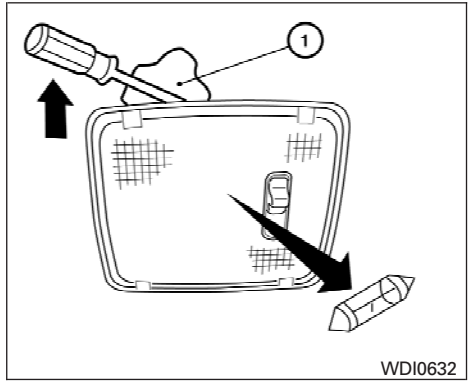

Interior light

Use a cloth ① to protect the housing.

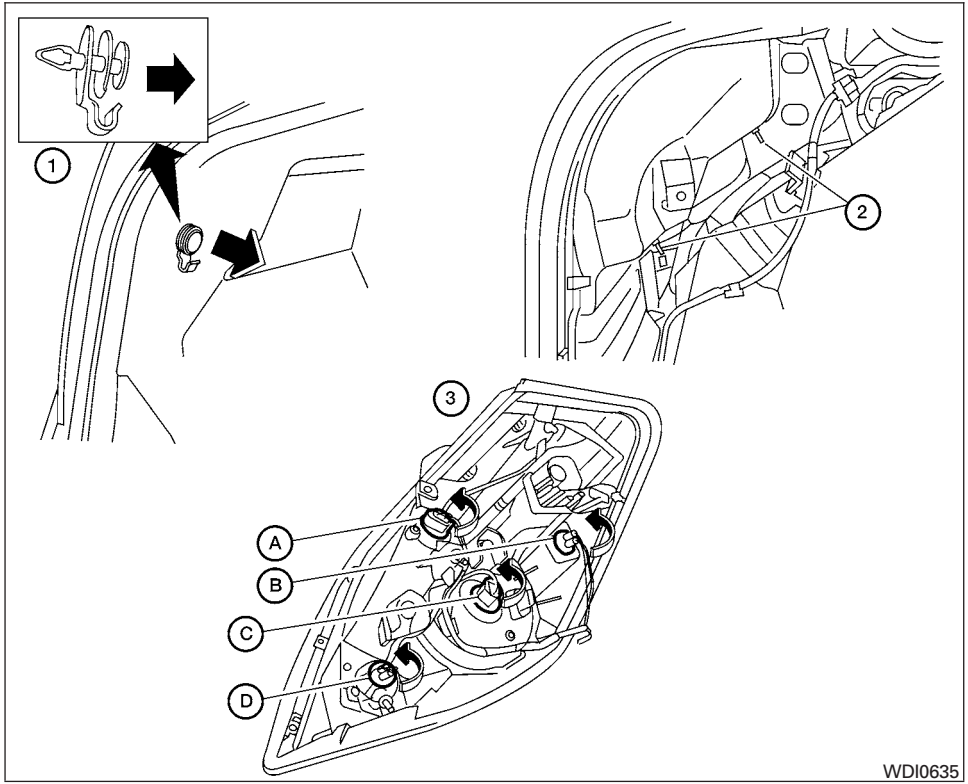

Rear combination light

To access the bulbs in the rear combination light:

① Remove the fasteners. Carefully push back the carpet.

② Remove the 2 nuts and pull out the rear combination light.

③ Rotate the bulb(s) counterclockwise and pull out to remove:

Ⓐ Turn signal light

Ⓑ Sidemarker light

Ⓒ Tail/stop light

Ⓓ Backup light

UPPER TETHER ANCHOR/KEY CYLINDER COVERS

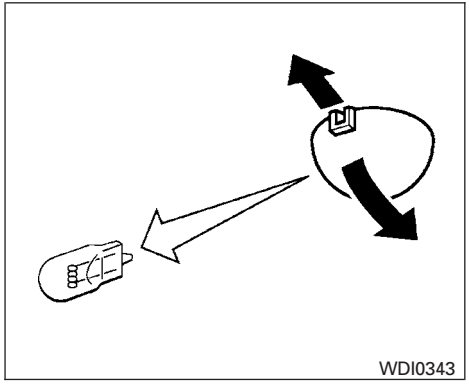

Trunk light

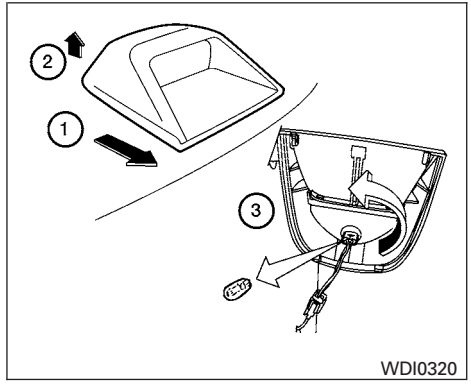

High-mounted stoplight (rear window)

⚠ CAUTION

Never force the covers into place because the hinge pins can be damaged. Follow the removal and installation instructions to prevent inoperability of the covers.

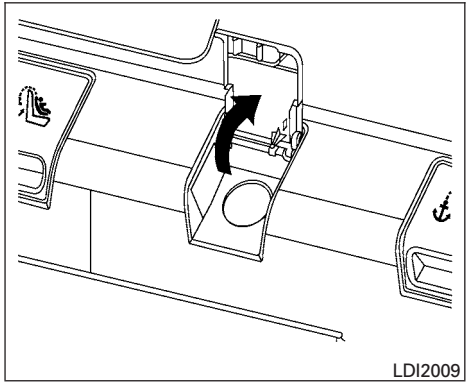

REMOVING COVERS FROM REAR PARCEL SHELF

Remove the top tether anchor cover or key cylinder cover as follows:

1. Lift the cover to the full open position.

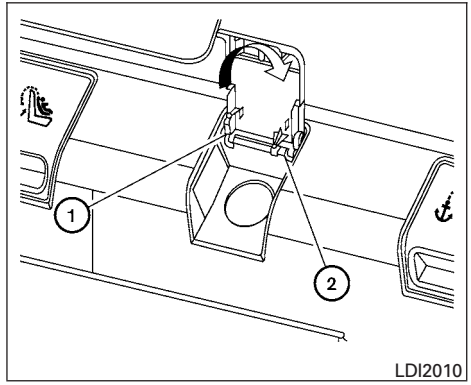

2. Rotate the cover in the direction shown, disengaging the hinge at ① and slide the second pin from the hinge ② and remove the cover.

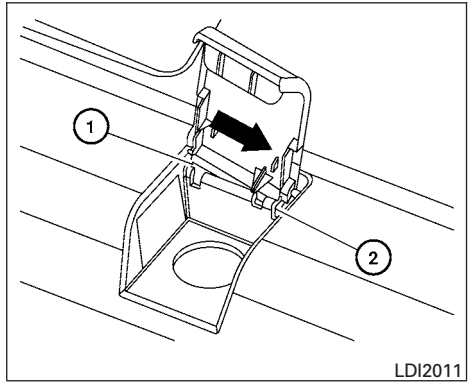

INSTALLING COVERS TO REAR PARCEL SHELF

⚠ CAUTION

Make sure that the hinge is completely aligned with the pin. If the pin is forced into position, it may break.

Install the top tether anchor cover or key cylinder cover as follows:

1. With the pin on one end kept free of its hinge ①, align the pin of the other end and slide it into the hinge ②.

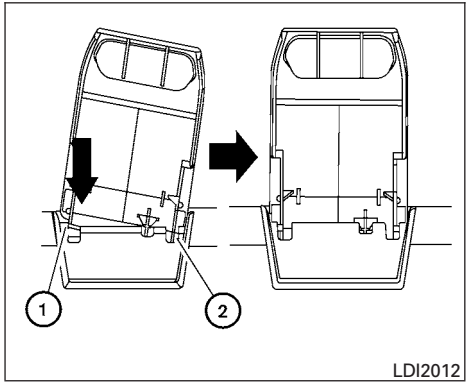

2. With the first pin in position ②, align the second pin with its hinge slot ① and push down on the cover to completely engage it. A snap sound will be heard.

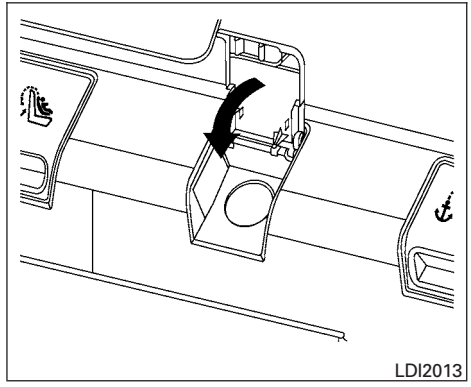

3. Close the cover.

If you have a flat tire, see "Flat tire" in the "In case of emergency" section of this manual.

TIRE PRESSURE

Tire Pressure Monitoring System (TPMS)

This vehicle is equipped with the Tire Pressure Monitoring System (TPMS). It monitors tire pressure of all tires except the spare. When the low tire pressure warning light is lit and the CHECK TIRE PRESSURE warning appears in the vehicle information display, one or more of your tires is significantly under-inflated.

The TPMS will activate only when the vehicle is driven at speeds above 16 MPH (25 km/h). Also, this system may not detect a sudden drop in tire pressure (for example a flat tire while driving).

For more details, refer to "Low tire pressure warning light" in the "Instruments and controls" section, "Tire Pressure Monitoring System (TPMS)" in the "Starting and driving" section, and "Flat tire" in the "In case of emergency" section.

Tire inflation pressure

Check the tire pressures (including the spare) often and always prior to long distance trips. The recommended tire pressure specifications are shown on the F.M.V.S.S./C.M.V.S.S. certification label or the Tire and Loading Information label under the "Cold Tire Pressure" heading. The Tire and Loading Information label is affixed to the driver side center pillar. Tire pressures should be checked regularly because:

- Most tires naturally lose air over time.
- Tires can lose air suddenly when driven over potholes or other objects or if the vehicle strikes a curb while parking.

The tire pressures should be checked when the tires are cold. The tires are considered COLD after the vehicle has been parked for 3 or more hours, or driven less than 1 mile (1.6 km) at moderate speeds.

Incorrect tire pressure, including under inflation, may adversely affect tire life and vehicle handling.

⚠WARNING

- **Improperly inflated tires can fail suddenly and cause an accident.**
- **The Gross Vehicle Weight Rating (GVWR) is located on the F.M.V.S.S./C.M.V.S.S. certification label. The vehicle weight capacity is indicated on the Tire and Loading Information label. Do not load your vehicle beyond this capacity. Overloading your vehicle may result in reduced tire life, unsafe operating conditions due to premature tire failure, or unfavorable handling characteristics and could also lead to a serious accident. Loading beyond the specified capacity may also result in failure of other vehicle components.**
- **Before taking a long trip, or whenever you heavily load your vehicle, use a tire pressure gauge to ensure that the tire pressures are at the specified level.**
- **For additional information regarding tires, refer to "Important Tire Safety Information" (US) or "Tire Safety Information" (Canada) in the Warranty Information Booklet.**

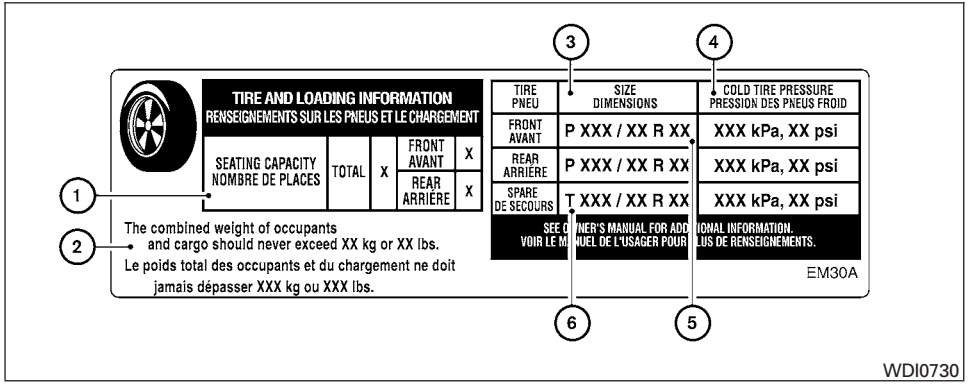

Tire and loading information label

① Seating capacity: The maximum number of occupants that can be seated in the vehicle.

② Vehicle load limit: See “Vehicle loading information” in the “Technical and consumer information” section.

③ Original tire size: The size of the tires originally installed on the vehicle at the factory.

④ Cold tire pressure: Inflate the tires to this pressure when the tires are cold. Tires are considered COLD after the vehicle has been parked for 3 or more hours, or driven less than 1 mile (1.6 km) at moderate speeds. The recommended cold tire inflation is set by the manufacturer to provide the best balance of tire wear, vehicle handling, driveability, tire noise, etc., up to the vehicle’s GVWR.

⑤ Tire size – refer to “Tire labeling” later in this section.

⑥ Spare tire size.

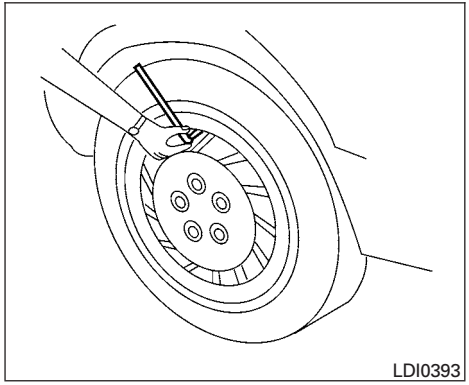

Checking tire pressure

1. Remove the valve stem cap from the tire.
2. Press the pressure gauge squarely onto the valve stem. Do not press too hard or force the valve stem sideways, or air will escape. If the hissing sound of air escaping from the tire is heard while checking the pressure, reposition the gauge to eliminate this leakage.
3. Remove the gauge.
4. Read the tire pressure on the gauge stem and compare to the specification shown on the Tire and Loading Information label.
5. Add air to the tire as needed. If too much air is added, press the core of the valve stem briefly with the tip of the gauge stem to release pressure. Recheck the pressure and add or release air as needed.
6. Install the valve stem cap.
7. Check the pressure of all other tires, including the spare.

	Size	Cold Tire Inflation Pressure
Front Original Tire	P215/60R16	220 kPa, 32 PSI
	P215/55R17	230 kPa, 33 PSI
	P235/45R18	
Rear Original Tire	P215/60R16	220 kPa, 32 PSI
	P215/55R17	230 kPa, 33 PSI
	P235/45R18	
Spare Tire	T135/90R16	420 kPa, 60 PSI

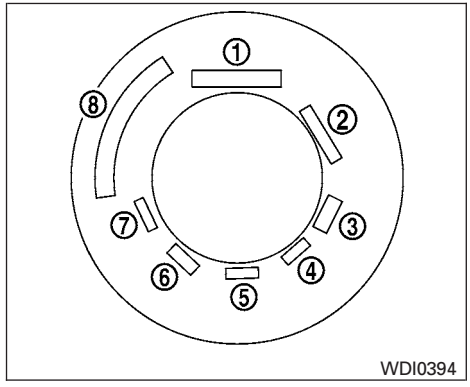

Example

TIRE LABELING

Federal law requires tire manufacturers to place standardized information on the sidewall of all tires. This information identifies and describes the fundamental characteristics of the tire and also provides the tire identification number (TIN) for safety standard certification. The TIN can be used to identify the tire in case of a recall.

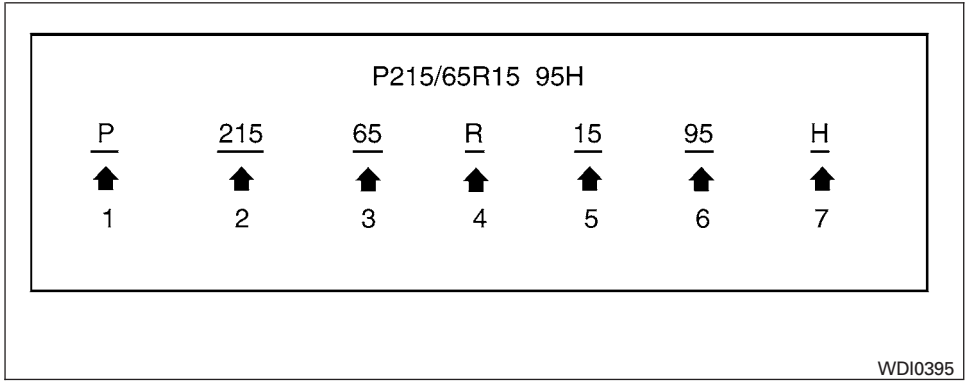

Example

① Tire size (example: P215/65R15 95H)

1. P: The “P” indicates the tire is designed for passenger vehicles (not all tires have this information).
2. Three-digit number (215): This number gives the width in millimeters of the tire from sidewall edge to sidewall edge.
3. Two-digit number (65): This number, known as the aspect ratio, gives the tire’s ratio of height to width.
4. R: The “R” stands for radial.
5. Two-digit number (15): This number is the wheel or rim diameter in inches.
6. Two- or three-digit number (95): This number is the tire’s load index. It is a measurement of how much weight each tire can support. You may not find this information on all tires because it is not required by law.
7. H: Tire speed rating. You should not drive the vehicle faster than the tire speed rating.

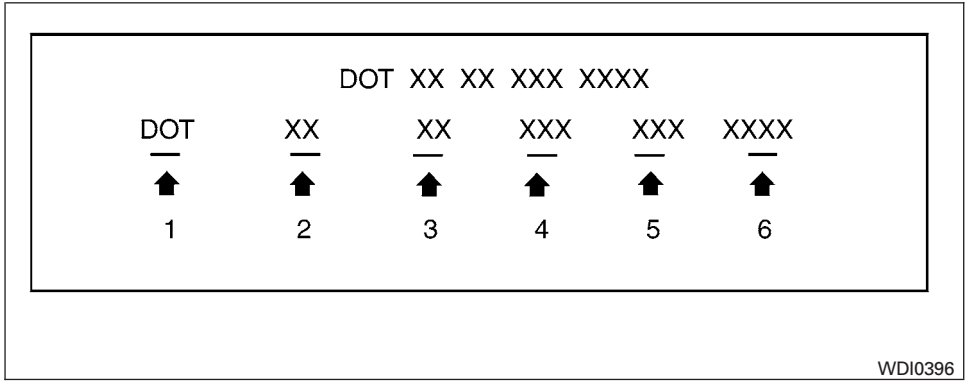

Example

② TIN (Tire Identification Number) for a new tire (example: DOT XX XX XXX XXXX)

1. DOT: Abbreviation for the "Department Of Transportation". The symbol can be placed above, below or to the left or right of the Tire Identification Number.
2. Two-digit code: Manufacturer's identification mark.
3. Two-digit code: Tire size.
4. Three-digit code: Tire type code (Optional).
5. Three-digit code: Date of Manufacture.
6. Four numbers represent the week and year the tire was built. For example, the numbers 3103 means the 31st week of 2003. If these numbers are missing, then look on the other sidewall of the tire.

③ Tire ply composition and material

The number of layers or plies of rubber-coated fabric in the tire. Tire manufacturers also must indicate the materials in the tire, which include steel, nylon, polyester, and others.

④ Maximum permissible inflation pressure

This number is the greatest amount of air pressure that should be put in the tire. Do not exceed the maximum permissible inflation pressure.

⑤ Maximum load rating

This number indicates the maximum load in kilograms and pounds that can be carried by the tire. When replacing the tires on the vehicle, always use a tire that has the same load rating as the factory installed tire.

⑥ Term of "tubeless" or "tube type"

Indicates whether the tire requires an inner tube ("tube type") or not ("tubeless").

⑦ The word “radial”

The word “radial” is shown if the tire has radial structure.

⑧ Manufacturer or brand name

Manufacturer or brand name is shown.

Other Tire-related Terminology

In addition to the many terms that are defined throughout this section, Intended Outboard Sidewall is (1) the sidewall that contains a whitewall, bears white lettering or bears manufacturer, brand, and/or model name molding that is higher or deeper than the same molding on the other sidewall of the tire, or (2) the outward facing sidewall of an asymmetrical tire that has a particular side that must always face outward when mounted on a vehicle.

TYPES OF TIRES

⚠ WARNING

- **When changing or replacing tires, be sure all four tires are of the same type (i.e., Summer, All Season or Snow) and construction. A NISSAN dealer may be able to help you with information about tire type, size, speed rating and availability.**
- **Replacement tires may have a lower speed rating than the factory equipped tires, and may not match the potential maximum vehicle speed. Never exceed the maximum speed rating of the tire.**
- **For additional information regarding tires, refer to “Important Tire Safety Information” (US) or “Tire Safety Information” (Canada) in the Warranty Information Booklet.**

All season tires

NISSAN specifies All Season tires on some models to provide good performance all year, including snowy and icy road conditions. All Season tires are identified by ALL SEASON and/or M&S on the tire sidewall. Snow tires have better snow traction than All Season tires and may be more appropriate in some areas.

Summer tires

NISSAN specifies summer tires on some models to provide superior performance on dry roads. Summer tire performance is substantially reduced in snow and ice. Summer tires do not have the tire traction rating “M&S” on the tire sidewall.

If you plan to operate your vehicle in snowy or icy conditions, NISSAN recommends the use of SNOW tires or ALL SEASON tires on all four wheels.

Snow tires

If snow tires are needed, it is necessary to select tires equivalent in size and load rating to the original equipment tires. If you do not, it can adversely affect the safety and handling of your vehicle.

Generally, snow tires have lower speed ratings than factory equipped tires and may not match the potential maximum vehicle speed. Never exceed the maximum speed rating of the tire.

If you install snow tires, they must be the same size, brand, construction and tread pattern on all four wheels.

For additional traction on icy roads, studded tires may be used. However, some U.S. states and Canadian provinces prohibit their use. Check local, state and provincial laws before installing

studded tires. Skid and traction capabilities of studded snow tires on wet or dry surfaces may be poorer than that of non-studded snow tires.

TIRE CHAINS

⚠ CAUTION

Only certain SAE class "S" tire chains can be used on this vehicle. Using the wrong Class "S" chains on this vehicle will cause damage to the vehicle. If you plan to use tire chains/cables, you should use a tire chain that meets the minimum clearances for your vehicle.

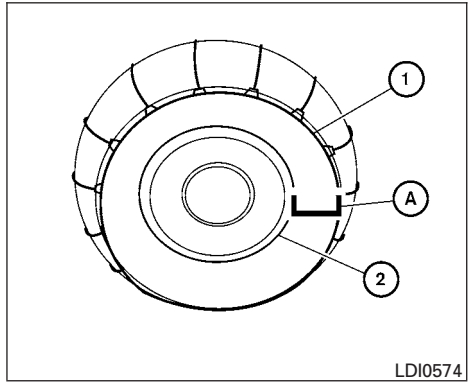

Use of tire chains may be prohibited according to location. Check the local laws before installing tire chains. When installing tire chains, make sure they are the proper size for the tires on your vehicle and are installed according to the chain manufacturer's suggestions. Use a tire chain that is designed to provide the specified space Ⓐ between the installed tire chain ① and where the tire meets the rim ② as shown on the chart.

Wheel size	Minimum space required
16 in	.7 in (17 mm)
17 in	.2 in (4 mm)
18 in	.2 in (4 mm)

A tire chain that provides the specified amount of space will provide the necessary clearance between the tire and the closest vehicle suspension or body component. The minimum clearances are determined using the factory-equipped tires. Other types may damage your vehicle. Use chain tensioners when recommended by the tire chain manufacturer to ensure a tight fit. Loose end links of the tire chain must be secured or removed to prevent the possibility of whipping action damage to the fenders or underbody. If possible, avoid fully loading your vehicle when using tire chains. In addition, drive at a reduced speed. Otherwise, your vehicle may be damaged and/or vehicle handling and performance may be adversely affected.

Tire chains must be installed only on the front wheels and not on the rear wheels.

Never install tire chains on a TEMPORARY USE ONLY spare tire.

Do not use tire chains on dry roads. Driving with tire chains in such conditions can cause damage to the various mechanisms of the vehicle due to some overstress.

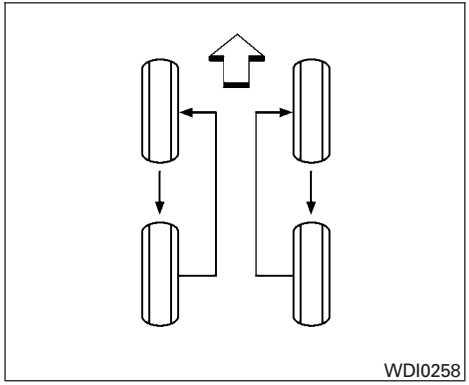

CHANGING WHEELS AND TIRES

Tire rotation

NISSAN recommends rotating the tires every 7,500 miles (12,000 km).

See “Flat tire” in the “In case of emergency” section of this manual for tire replacing procedures.

As soon as possible, tighten the wheel nuts to the specified torque with a torque wrench.

Wheel nut tightening torque:
83 ft-lb (113 N·m)

The wheel nuts must be kept tightened to specifications at all times. It is recommended that wheel nuts be tightened to specification at each tire rotation interval.

⚠WARNING

- **After rotating the tires, check and adjust the tire pressure.**
- **Retighten the wheel nuts when the vehicle has been driven for 600 miles (1,000 km) (also in cases of a flat tire, etc.).**
- **Do not include the spare tire in the tire rotation.**
- **For additional information regarding tires, refer to “Important Tire Safety Information” (US) or “Tire Safety Information” (Canada) in the Warranty Information Booklet.**

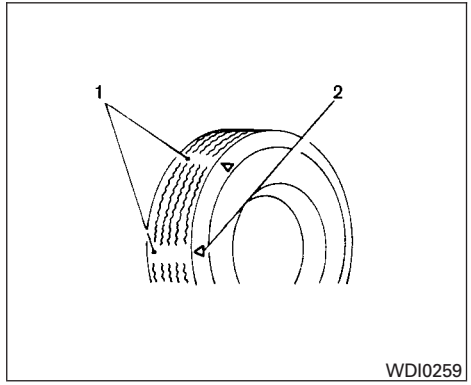

1. Wear indicator
2. Location mark

Tire wear and damage

⚠WARNING

- **Tires should be periodically inspected for wear, cracking, bulging or objects caught in the tread. If excessive wear, cracks, bulging or deep cuts are found, the tire(s) should be replaced.**

- **The original tires have built-in tread wear indicators. When the wear indicators are visible, the tire(s) should be replaced.**
- **Tires degrade with age and use. Have tires, including the spare, over 6 years old checked by a qualified technician because some tire damage may not be obvious. Replace the tires as necessary to prevent tire failure and possible personal injury.**
- **Improper service of the spare tire may result in serious personal injury. If it is necessary to repair the spare tire, contact a NISSAN dealer.**
- **For additional information regarding tires, refer to "Important Tire Safety Information" (US) or "Tire Safety Information" (Canada) in the Warranty Information Booklet.**

Replacing wheels and tires

When replacing a tire, use the same size, tread design, speed rating and load carrying capacity as originally equipped. Recommended types and sizes are shown in "Wheels and tires" in the "Technical and consumer information" section of this manual.

⚠ WARNING

- **The use of tires other than those recommended or the mixed use of tires of different brands, construction (bias, bias-belted or radial), or tread patterns can adversely affect the ride, braking, handling, VDC system (if so equipped), ground clearance, body-to-tire clearance, tire chain clearance, speedometer calibration, headlight aim and bumper height. Some of these effects may lead to accidents and could result in serious personal injury.**
- **If your vehicle was originally equipped with 4 tires that were the same size and you are only replacing 2 of the 4 tires , install the new tires on the rear axle. Placing new tires on the front axle may cause loss of vehicle control in some driving conditions and cause an accident and personal injury.**
- **If the wheels are changed for any reason, always replace with wheels which have the same off-set dimension. Wheels of a different off-set could cause premature tire wear, degrade vehicle handling characteristics, affect the VDC system (if so equipped) and/or interference with the brake discs/drums. Such interference can lead to decreased braking efficiency and/or early brake pad/shoe wear. Refer to "Wheels and tires" in the "Technical and consumer information" section of this manual for wheel off-set dimensions.**
- **When a spare tire is mounted or a wheel is replaced, the TPMS (if so equipped) will not function and the low tire pressure warning light will flash for approximately 1 minute. The light will remain on after 1 minute. Contact your NISSAN dealer as soon as possible for tire replacement and/or system resetting.**
- **Replacing tires with those not originally specified by NISSAN could affect the proper operation of the TPMS (if so equipped).**

- **Do not install a damaged or deformed wheel or tire even if it has been repaired. Such wheels or tires could have structural damage and could fail without warning.**
- **The use of retread tires is not recommended.**
- **For additional information regarding tires, refer to "Important Tire Safety Information" (US) or "Tire Safety Information" (Canada) in the Warranty Information Booklet.**

Wheel balance

Unbalanced wheels may affect vehicle handling and tire life. Even with regular use, wheels can get out of balance. Therefore, they should be balanced as required.

Wheel balance service should be performed with the wheels off the vehicle. Spin balancing the wheels on the vehicle could lead to mechanical damage.

- **For additional information regarding tires, refer to "Important Tire Safety Information" (US) or "Tire Safety Information" (Canada) in the Warranty Information Booklet.**

Care of wheels

- Wash the wheels when washing the vehicle to maintain their appearance.
- Clean the inner side of the wheels when the wheel is changed or the underside of the vehicle is washed.
- Do not use abrasive cleaners when washing the wheels.
- Inspect wheel rims regularly for dents or corrosion. Such damage may cause loss of pressure or poor seal at the tire bead.
- NISSAN recommends waxing the road wheels to protect against road salt in areas where it is used during winter.

Spare tire (TEMPORARY USE ONLY spare tire)

Observe the following precautions if the TEMPORARY USE ONLY spare tire must be used. Otherwise, your vehicle could be damaged or involved in an accident:

⚠ WARNING

- **The spare tire should be used for emergency use only. It should be replaced with the standard tire at the first opportunity to avoid possible tire or differential damage.**
- **Drive carefully while the TEMPORARY USE ONLY spare tire is installed. Avoid sharp turns and abrupt braking while driving.**
- **Periodically check spare tire inflation pressure. Always keep the pressure of the TEMPORARY USE ONLY spare tire at 60 psi (420 kPa, 4.2 bar).**
- **With the TEMPORARY USE ONLY spare tire installed do not drive the vehicle at speeds faster than 50 MPH (80 km/h).**
- **When driving on roads covered with snow or ice, the TEMPORARY USE ONLY spare tire should be used on the rear wheels and the original tire used on the front wheels (drive wheels). Use tire chains only on the front (original) tires.**

- **Tire tread of the TEMPORARY USE ONLY spare tire will wear at a faster rate than the standard tire. Replace the spare tire as soon as the tread wear indicators appear.**
- **Do not use the spare tire on other vehicles.**
- **Do not use more than one spare tire at the same time.**
- **Do not tow a trailer when the TEMPORARY USE ONLY spare tire is installed.**

⚠ CAUTION

- **Do not use tire chains on a TEMPORARY USE ONLY spare tire. Tire chains will not fit properly and may cause damage to the vehicle.**
- **Because the TEMPORARY USE ONLY spare tire is smaller than the original tire, ground clearance is reduced. To avoid damage to the vehicle, do not drive over obstacles. Also, do not drive the vehicle through an automatic car wash since it may get caught.**

9 Technical and consumer information

Capacities and recommended fuel/lubricants 9-2
Fuel recommendation 9-3
Engine oil and oil filter recommendations 9-5
Air conditioner system refrigerant and oil recommendations 9-6
Specifications 9-7
Engine 9-7
Wheels and tires 9-8
Dimensions and weights 9-8
When traveling or registering your vehicle in another country 9-9
Vehicle identification 9-9
Vehicle identification number (VIN) plate 9-9
Vehicle identification number (chassis number) 9-9
Engine serial number 9-10
F.M.V.S.S./C.M.V.S.S. certification label 9-10
Emission control information label 9-11
Tire and loading information label 9-11
Air conditioner specification label 9-12
Installing front license plate 9-12
Vehicle loading information 9-13
Terms 9-13
Vehicle load capacity 9-13
Loading tips 9-15
Measurement of weights 9-15
Towing a trailer 9-16
Maximum load limits 9-16
Towing load/specification 9-19
Towing safety 9-19
Flat towing 9-23
Uniform tire quality grading 9-24
Emission control system warranty 9-25
Reporting safety defects 9-25
Readiness for inspection/maintenance (I/M) test 9-26
Event Data Recorders (EDR) 9-26
Owner's Manual/Service Manual order information . . . 9-27
In the event of a collision 9-27

CAPACITIES AND RECOMMENDED FUEL/LUBRICANTS

The following are approximate capacities. The actual refill capacities may be slightly different. When refilling, follow the procedure described in the "Maintenance and do-it-yourself" section to determine the proper refill capacity.

		Capacity (Approximate)			Recommended Fluids and Lubricants
		US measure	Imp measure	Liter	
Fuel		20 gal	16-5/8 gal	75.6	See "Fuel recommendation" later in this section.
Engine oil *8					
Drain and Refill					
With oil filter change	QR25DE	4-7/8 qt	4 qt	4.6	▪ Engine oil with API Certification Mark *1, *2 ▪ Viscosity SAE 5W-30 *1, *2
	VQ35DE	5-1/8 qt	4-1/4 qt	4.8	
Without oil filter change	QR25DE	4-1/2 qt	3-3/4 qt	4.3	
	VQ35DE	4-3/4 qt	4 qt	4.5	
Cooling system					
With reservoir					
	QR25DE	2 gal	1-3/4 gal	7.7	Pre-diluted Genuine NISSAN Long Life Antifreeze/Coolant (blue) or equivalent
	VQ35DE	2-3/8 gal	2 gal	9.0	
Manual transmission gear oil		—	—	—	Genuine NISSAN Manual Transmission Fluid (MTF) HQ Multi 75W-85 or equivalent *3
Continuously Variable Transmission (CVT) fluid		—	—	—	Genuine NISSAN CVT Fluid NS-2 *4
Power steering fluid (PSF)		—	—	—	Genuine NISSAN PSF or equivalent.*5
Brake and clutch fluid		—	—	—	Genuine NISSAN Super Heavy Duty Brake Fluid *6 or equivalent DOT 3
Multi-purpose grease		—	—	—	NLGI No. 2 (Lithium Soap base)
Air conditioning system refrigerant		—	—	—	HFC-134a (R-134a) *7
Air conditioning system oil		—	—	—	Genuine NISSAN A/C System Oil Type S or equivalent *7
Windshield-washer fluid		—	—	—	Genuine NISSAN Windshield Washer Concentrate Cleaner & Antifreeze fluid or equivalent

*1: For further details, see "Engine oil and oil filter recommendations" in this section.
*2: **NISSAN recommends for the VQ35DE engine, Genuine NISSAN Ester Engine Oil available at a NISSAN dealer.**
*3: If Genuine NISSAN Manual Transmission Fluid (MTF) Multi 75W-85 is hard to obtain , API GL-4, Viscosity SAE 75W-85 may be used as a temporary replacement. However, use Genuine NISSAN gear oil as soon as it is available.
*4 **Use only Genuine NISSAN CVT Fluid NS-2. Using transmission fluid other than Genuine NISSAN CVT Fluid NS-2 will damage the CVT, which is not covered by the NISSAN new vehicle limited warranty.**
*5 DEXRON™ VI type ATF may also be used.
*6 Available in mainland USA through a NISSAN dealer.
*7 For further details, see "Air conditioner system refrigerant and oil recommendations" in this section.
*8: For further details, see "Engine Oil" in the "Maintenance and do-it-yourself" section of this manual.

FUEL RECOMMENDATION

Use unleaded regular gasoline with an octane rating of at least 87 AKI (Anti-Knock Index) number (Research octane number 91).

⚠ CAUTION

- **Using a fuel other than that specified could adversely affect the emission control system, and may also affect the warranty coverage.**
- **Under no circumstances should a leaded gasoline be used, because this will damage the three-way catalyst.**
- **Do not use E-85 fuel in your vehicle. Your vehicle is not designed to run on E-85 fuel. Using E-85 fuel can damage the fuel system components and is not covered by the NISSAN new vehicle limited warranty.**

Gasoline specifications

NISSAN recommends using gasoline that meets the World-Wide Fuel Charter (WWFC) specifications where it is available. Many of the automobile manufacturers developed this specification to improve emission control system and vehicle performance. Ask your service station manager if the gasoline meets the WWFC specifications.

Reformulated gasoline

Some fuel suppliers are now producing reformulated gasolines. These gasolines are specially designed to reduce vehicle emissions. NISSAN supports efforts towards cleaner air and suggests that you use reformulated gasoline when available.

Gasoline containing oxygenates

Some fuel suppliers sell gasoline containing oxygenates such as ethanol, MTBE and methanol with or without advertising their presence. NISSAN does not recommend the use of fuels of which the oxygenate content and the fuel compatibility for your NISSAN cannot be readily determined. If in doubt, ask your service station manager.

If you use oxygenate-blend gasoline, please take the following precautions as the usage of such fuels may cause vehicle performance problems and/or fuel system damage.

- **The fuel should be unleaded and have an octane rating no lower than that recommended for unleaded gasoline.**
- **If an oxygenate-blend other than methanol blend is used, it should contain no more than 10% oxygenate. (MTBE may, however, be added up to 15%.)**
- **If a methanol blend is used, it should contain no more than 5% methanol (methyl alcohol, wood alcohol). It should also contain a suitable amount of appropriate cosolvents and corrosion inhibitors. If not properly formulated with appropriate cosolvents and corrosion inhibitors, such methanol blends may cause fuel system damage and/or vehicle performance problems. At this time, sufficient data is not available to ensure that all methanol blends are suitable for use in NISSAN vehicles.**

If any driveability problems such as engine stalling and difficult hot-starting are experienced after using oxygenate-blend fuels, immediately change to a non-oxygenate fuel or a fuel with a low blend of MTBE.

Take care not to spill gasoline during refueling. Gasoline containing oxygenates can cause paint damage.

E–85 fuel

E-85 fuel is a mixture of approximately 85% fuel ethanol and 15% unleaded gasoline. E-85 can only be used in a Flexible Fuel Vehicle (FFV). Do not use E-85 in your vehicle. U.S. government regulations require fuel ethanol dispensing pumps to be identified by a small, square, orange and black label with the common abbreviation or the appropriate percentage for that region.

Aftermarket fuel additives

NISSAN does not recommend the use of any aftermarket fuel additives (for example, fuel injector cleaner, octane booster, intake valve deposit removers, etc.) which are sold commercially. Many of these additives intended for gum, varnish or deposit removal may contain active solvents or similar ingredients that can be harmful to the fuel system and engine.

Octane rating tips

Using unleaded gasoline with an octane rating lower than recommended can cause persistent, heavy "spark knock." ("Spark knock" is a metallic rapping noise.) If severe, this can lead to engine damage. If you detect a persistent heavy spark knock even when using gasoline of the stated octane rating, or if you hear steady spark knock while holding a steady speed on level roads, have a NISSAN dealer correct the condition. Failure to correct the condition is misuse of the vehicle, for which NISSAN is not responsible.

Incorrect ignition timing may result in spark knock, after-run and/or overheating, which may cause excessive fuel consumption or engine damage. If any of the above symptoms are encountered, have your vehicle checked at a NISSAN dealer.

However, now and then you may notice light spark knock for a short time while accelerating or driving up hills. This is not a cause for concern, because you get the greatest fuel benefit when there is light spark knock for a short time under heavy engine load.

⚠ CAUTION

- **Your vehicle is not designed to run on E-85 fuel. Using E-85 fuel in a vehicle not specifically designed for E-85 fuel can damage fuel system components and is not covered by the NISSAN new vehicle limited warranty.**
- **E-85 is a mixture of approximately 85% fuel ethanol and 15% unleaded gasoline.**
- **U.S. government regulations require ethanol dispensing pumps to be identified by a small, square, orange and black label with the common abbreviation or the appropriate percentage for that region.**

API certification mark

API service symbol

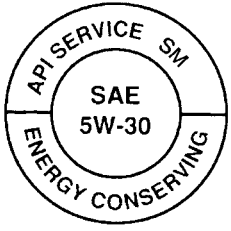

WTI0183

ENGINE OIL AND OIL FILTER RECOMMENDATIONS

Selecting the correct oil

It is essential to choose the correct grade, quality and viscosity engine oil to ensure satisfactory engine life and performance. See “Capacities and recommended fuel/lubricants” earlier in this section. NISSAN recommends the use of an energy conserving oil in order to improve fuel economy.

Select only engine oils that meet the American Petroleum Institute (API) certification or International Lubricant Standardization and Approval Committee (ILSAC) certification and SAE viscosity standard. These oils have the API certification mark on the front of the container. Oils which do not have the specified quality label should not be used as they could cause engine damage.

Oil additives

NISSAN does not recommend the use of oil additives. The use of an oil additive is not necessary when the proper oil type is used and maintenance intervals are followed.

Oil which may contain foreign matter or has been previously used should not be used.

Oil viscosity

The engine oil viscosity or thickness changes with temperature. Because of this, it is important to select the engine oil viscosity based on the temperatures at which the vehicle will be operated before the next oil change. Choosing an oil viscosity other than that recommended could cause serious engine damage.

Selecting the correct oil filter

Your new NISSAN vehicle is equipped with a high-quality genuine NISSAN oil filter. When replacing, use a genuine NISSAN oil filter or its equivalent for the reason described in “Change intervals.”

Change intervals

The oil and oil filter change intervals for your engine are based on the use of the specified quality oils and filters. Using engine oil and filters that are not of the specified quality, or exceeding recommended oil and filter change intervals could reduce engine life. Damage to the engine caused by improper maintenance or use of incorrect oil and filter quality and/or viscosity is not covered by the NISSAN new vehicle limited warranty.

Your engine was filled with a high-quality engine oil when it was built. You do not have to change the oil before the first recommended change interval. Oil and filter change intervals depend upon how you use your vehicle.

Operation under the following conditions may require more frequent oil and filter changes:

- repeated short distance driving at cold outside temperatures
- driving in dusty conditions
- extensive idling
- towing a trailer
- stop and go commuting

Refer to the “NISSAN Service and Maintenance Guide” for the maintenance schedule.

AIR CONDITIONER SYSTEM REFRIGERANT AND OIL RECOMMENDATIONS

The air conditioner system in your NISSAN vehicle must be charged with the refrigerant HFC-134a (R-134a) and NISSAN A/C system oil Type S or the exact equivalents.

⚠ CAUTION

The use of any other refrigerant or oil will cause severe damage to the air conditioning system and will require the replacement of all air conditioner system components.

The refrigerant HFC-134a (R-134a) in your NISSAN vehicle does not harm the earth’s ozone layer. Although this refrigerant does not affect the earth’s atmosphere, certain government regulations require the recovery and recycling of any refrigerant during automotive air conditioner system service. A NISSAN dealer has the trained technicians and equipment needed to recover and recycle your air conditioner system refrigerant.

Contact a NISSAN dealer when servicing your air conditioner system.

SPECIFICATIONS

ENGINE

Model		QR25DE	VQ35DE
Type		Gasoline, 4-cycle, DOHC	Gasoline, 4-cycle, DOHC
Cylinder arrangement		4-cylinder in-line	6-cylinder, V-block, Slanted at 60°
Bore x Stroke	in (mm)	3.5 x 3.9 (89.0 x 100.0)	3.760 x 3.205 (95.5 x 81.4)
Displacement	cu in (cm^3)	151.82 (2,488)	213.45 (3,498)
Firing order		1–3–4–2	1–2–3–4–5–6
Idle speed M/T CVT (in “N” position) Ignition timing (degree B.T.D.C. at idle speed) CO % at idle		No adjustment is necessary.	
Spark plug		DILKAR6A-11	FXE22HR-11
Spark plug gap (Nominal)	in (mm)	0.043 (1.1)	0.043 (1.1)
Camshaft operation		Timing chain	Timing chain

This spark ignition system complies with the Canadian standard ICES-002.

WHEELS AND TIRES

Wheel type	Size	Offset in (mm)
Aluminum/Steel	16 x 7JJ	1.77 (45)
Aluminum	17 x 7 1/2JJ	1.77 (45)
Aluminum	18 x 8.0JJ	1.77 (45)
T type (Spare)	16 x 4T	1.57 (40)
Tire size		P215/60R16
		P215/55R17
		P235/45R18
Spare tire	Alloy	T135/90D16
	Steel	T135/70D16

DIMENSIONS AND WEIGHTS

		Coupe	Sedan
Overall length	in (mm)	180.9 (4,595)	190.7 (4,844)
Overall width	in (mm)	70.7 (1,795)	70.7 (1,795)
Overall height	in (mm)	56.0 (1,423)	58.0 (1,473)
Front track	in (mm)	61.0 (1,550)	61.0 (1,550)
Rear track	in (mm)	61.2 (1,554)	61.1 (1,551)
Wheelbase	in (mm)	105.3 (2,675)	109.3 (2,775)
Gross vehicle weight rating	lb (kg)	See the “F.M.V.S.S./C.M.V.S.S. certification label” on the center pillar between the driver’s side front and rear doors.	
Gross axle weight rating			
Front	lb (kg)		
Rear	lb (kg)		

WHEN TRAVELING OR REGISTERING YOUR VEHICLE IN ANOTHER COUNTRY

When planning to drive your NISSAN vehicle in another country, you should first find out if the fuel available is suitable for your vehicle's engine.

Using fuel with an octane rating that is too low may cause engine damage. All gasoline vehicles must be operated with unleaded gasoline. Therefore, avoid taking your vehicle to areas where appropriate fuel is not available.

When transferring the registration of your vehicle to another country, state, province or district, it may be necessary to modify the vehicle to meet local laws and regulations.

The laws and regulations for motor vehicle emission control and safety standards vary according to the country, state, province or district; therefore, vehicle specifications may differ.

When any vehicle is to be taken into another country, state, province or district and registered, its modifications, transportation, and registration are the responsibility of the user. NISSAN is not responsible for any inconvenience that may result.

VEHICLE IDENTIFICATION

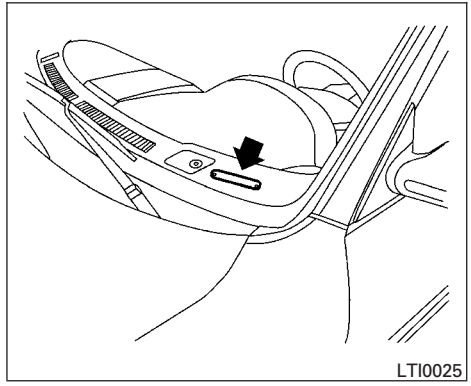

VEHICLE IDENTIFICATION NUMBER (VIN) PLATE

The vehicle identification number (VIN) plate is attached as shown. This number is the identification for your vehicle and is used in the vehicle registration.

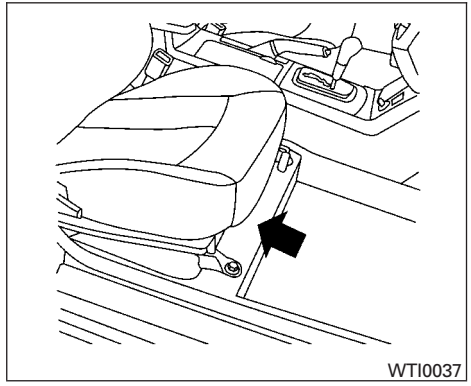

VEHICLE IDENTIFICATION NUMBER (chassis number)

The vehicle identification number is located as shown.

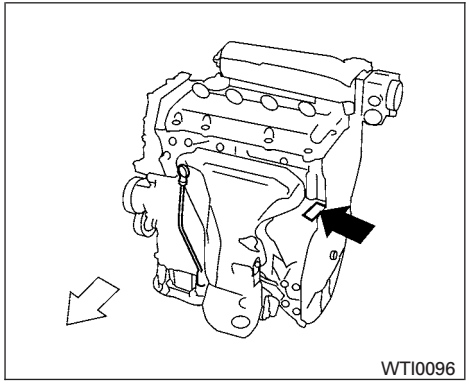

QR25DE

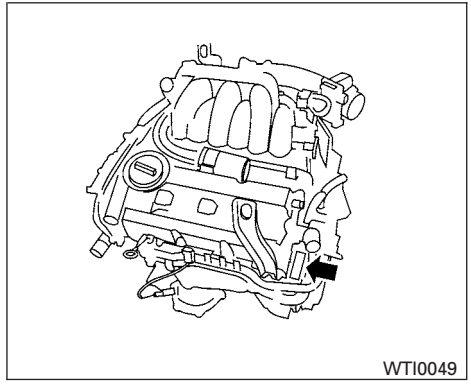

VQ35DE

ENGINE SERIAL NUMBER

The number is stamped on the engine as shown.

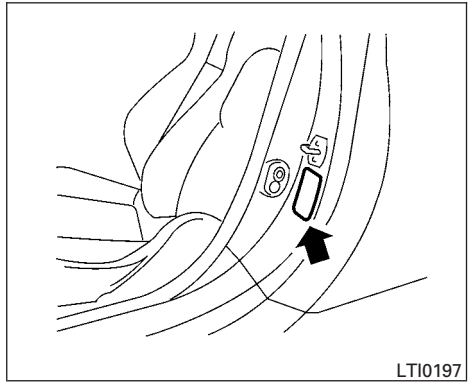

F.M.V.S.S./C.M.V.S.S. CERTIFICATION LABEL

The Federal/Canadian Motor Vehicle Safety Standard (F.M.V.S.S./C.M.V.S.S.) certification label is affixed as shown. This label contains valuable vehicle information, such as: Gross Vehicle Weight Ratings (GVWR), Gross Axle Weight Rating (GAWR), month and year of manufacture, Vehicle Identification Number (VIN), etc. Review it carefully.

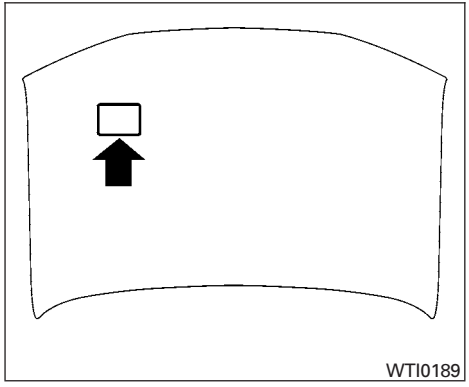

EMISSION CONTROL INFORMATION LABEL

The emission control information label is attached to the underside of the hood as shown.

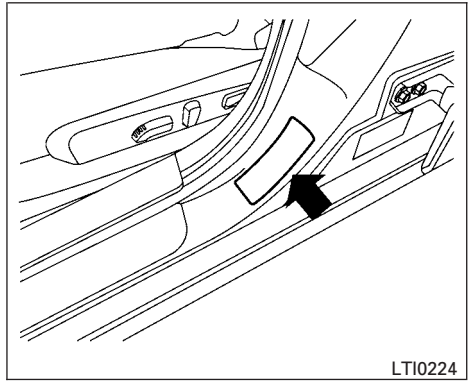

Sedan

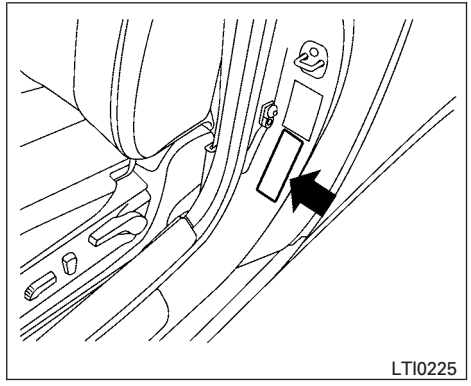

Coupe

TIRE AND LOADING INFORMATION LABEL

The cold tire pressure is shown on the Tire and Loading Information label. The label is located as shown.

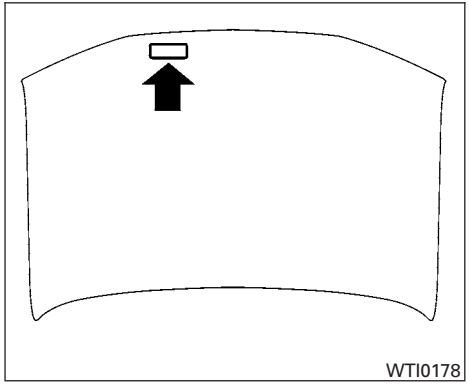

AIR CONDITIONER SPECIFICATION LABEL

The air conditioner specification label is affixed to the underside of the hood as shown.

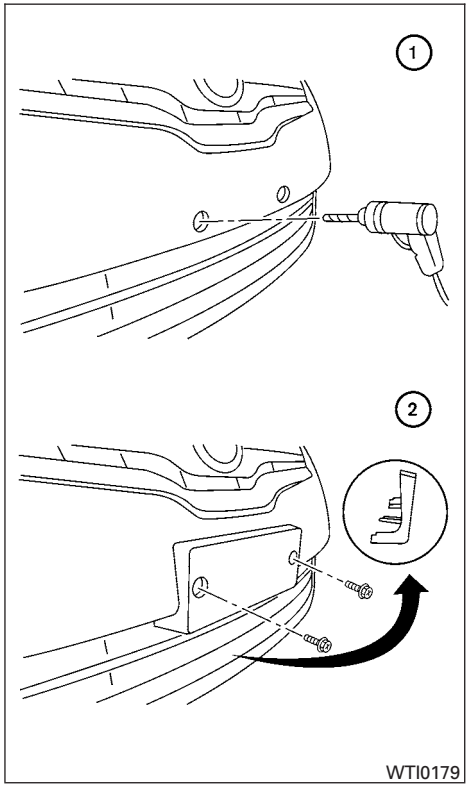

Use the following steps to mount the front license plate:

① Make a shallow hole in each plastic finisher at the location mark (small dimple) using a 0.39 in (10 mm) drill. To avoid damaging the threads behind the finisher, apply only light pressure to the drill.

② Mount the license plate bracket using two **10 mm slotted Phillip head screws.**

⚠WARNING

- **It is extremely dangerous to ride in a cargo area inside a vehicle. In a collision, people riding in these areas are more likely to be seriously injured or killed.**
- **Do not allow people to ride in any area of your vehicle that is not equipped with seats and seat belts.**
- **Be sure everyone in your vehicle is in a seat and using a seat belt properly.**

TERMS

It is important to familiarize yourself with the following terms before loading your vehicle:

- Curb Weight (actual weight of your vehicle) - vehicle weight including: standard and optional equipment, fluids, emergency tools, and spare tire assembly. This weight **does not** include passengers and cargo.
- GVW (Gross Vehicle Weight) - curb weight plus the combined weight of passengers and cargo.
- GVWR (Gross Vehicle Weight Rating) - maximum total combined weight of the unloaded vehicle, passengers, luggage, hitch, trailer tongue load and any other optional equipment. This information is located on the F.M.V.S.S./C.M.V.S.S. certification label.
- GAWR (Gross Axle Weight Rating) - maximum weight (load) limit specified for the front or rear axle. This information is located on the F.M.V.S.S./C.M.V.S.S. certification label.
- GCWR (Gross Combined Weight rating) - The maximum total weight rating of the vehicle, passengers, cargo, and trailer.
- Vehicle Capacity Weight, Load limit, Total load capacity - maximum total weight limit specified of the load (passengers and cargo) for the vehicle. This is the maximum combined weight of occupants and cargo that can be loaded into the vehicle. If the vehicle is used to tow a trailer, the trailer tongue weight must be included as part of the cargo load. This information is located on the Tire and Loading Information label (if so equipped).
- Cargo capacity - permissible weight of cargo, the subtracted weight of occupants from the load limit.

VEHICLE LOAD CAPACITY

Do not exceed the load limit of your vehicle shown as “The combined weight of occupants and cargo” on the Tire and Loading Information label. Do not exceed the number of occupants shown as “Seating Capacity” on the Tire and Loading Information label.

To get “the combined weight of occupants and cargo”, add the weight of all occupants, then add the total luggage weight. Examples are shown in the following illustration.

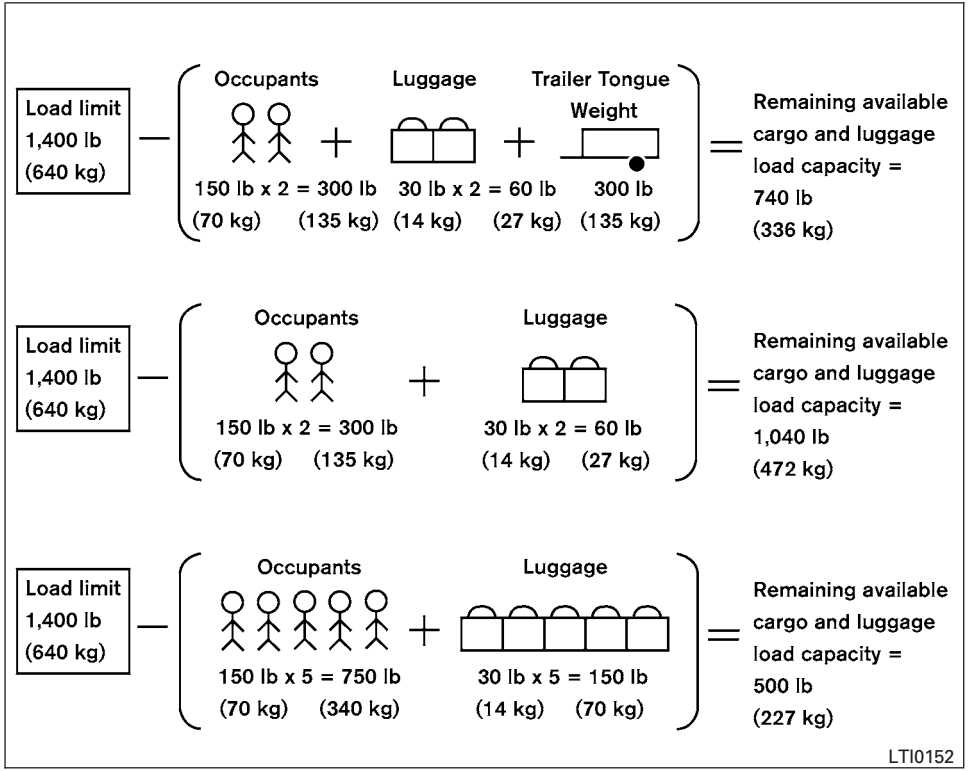

Example

Steps for determining correct load limit

1. Locate the statement “The combined weight of occupants and cargo should never exceed XXX kg or XXX lbs” on your vehicle’s placard.
2. Determine the combined weight of the driver and passengers that will be riding in your vehicle.
3. Subtract the combined weight of the driver and passengers from XXX kg or XXX lbs.
4. The resulting figure equals the available amount of cargo and luggage load capacity. For example, if the XXX amount equals 1400 lbs. and there will be five 150 lb. passengers in your vehicle, the amount of available cargo and luggage load capacity is 650 lbs. (1400-750 (5 X 150) = 650 lbs) or (640-340 (5 X 70) = 300 kg.)

5. Determine the combined weight of luggage and cargo being loaded on the vehicle. That weight may not safely exceed the available cargo and luggage load capacity calculated in Step 4.
6. If your vehicle will be towing a trailer, load from your trailer will be transferred to your vehicle. Consult this manual to determine how this reduces the available cargo and luggage load capacity of your vehicle.

Before driving a loaded vehicle, confirm that you do not exceed the Gross Vehicle Weight Rating (GVWR) or the Gross Axle Weight Rating (GAWR) for your vehicle. See “Measurement of weights” later in this section.

Also check tires for proper inflation pressures. See the Tire and Loading Information label.

LOADING TIPS

- The GVW must not exceed GVWR or GAWR as specified on the F.M.V.S.S./C.M.V.S.S. certification label.
- Do not load the front and rear axle to the GAWR. Doing so will exceed the GVWR.

⚠WARNING

- **Properly secure all cargo with ropes or straps to help prevent it from sliding or shifting. Do not place cargo higher than the seatbacks. In a sudden stop or collision, unsecured cargo could cause personal injury.**
- **Do not load your vehicle any heavier than the GVWR or the maximum front and rear GAWRs. If you do, parts of your vehicle can break, tire damage could occur, or it can change the way your vehicle handles. This could result in loss of control and cause personal injury.**
- **Overloading not only can shorten the life of your vehicle and the tire, but can also cause unsafe vehicle handling and longer braking distances. This may cause a premature tire failure which could result in a serious accident and personal injury. Failures caused by overloading are not covered by the vehicle’s warranty.**

MEASUREMENT OF WEIGHTS

Secure loose items to prevent weight shifts that could affect the balance of your vehicle. When the vehicle is loaded, drive to a scale and weigh the front and the rear wheels separately to determine axle loads. Individual axle loads should not exceed either of the gross axle weight ratings (GAWR). The total of the axle loads should not exceed the gross vehicle weight rating (GVWR). These ratings are given on the vehicle certification label. If weight ratings are exceeded, move or remove items to bring all weights below the ratings.

⚠ WARNING

Overloading or improper loading of a trailer and its cargo can adversely affect vehicle handling, braking and performance and may lead to accidents.

⚠ CAUTION

- **Do not tow a trailer or haul a heavy load for the first 500 miles (800 km). Your engine, axle or other parts could be damaged.**
- **For the first 500 miles (800 km) that you tow a trailer, do not drive over 50 mph (80 km/h) and do not make starts at full throttle. This helps the engine and other parts of your vehicle wear in at the heavier loads.**

Your new vehicle was designed to be used primarily to carry passengers and cargo. Remember that towing a trailer places additional loads on your vehicle's engine, drive train, steering, braking and other systems.

A NISSAN Towing Guide (U.S. only) is available on the website at www.nissanusa.com. This guide includes information on trailer towing capability and the special equipment required for proper towing.

MAXIMUM LOAD LIMITS

Maximum trailer loads

Never allow the total trailer load to exceed the value specified in the "Towing Load/Specification" chart found later in this section. The total trailer load equals trailer weight plus its cargo weight.

- **When towing a trailer load of 1,000 lbs. (454 kg) or more, trailers with a brake system must be used.**

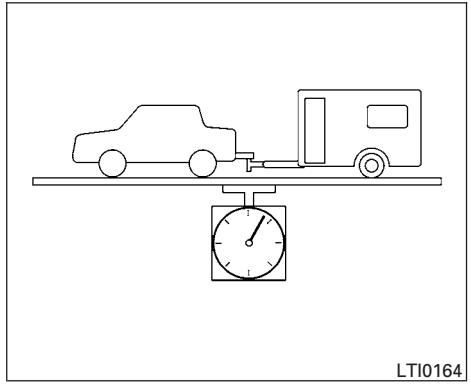

The Gross Combined Weight Rating (GCWR) equals the combined weight of the towing vehicle (including passengers and cargo) plus the total trailer load. Towing loads greater than these or using improper towing equipment could adversely affect vehicle handling, braking and performance.

The ability of your vehicle to tow a trailer is not only related to the maximum trailer loads, but also the places you plan to tow. Tow weights appropriate for level highway driving may have to be reduced for low traction situations (for example, on slippery boat ramps).

Temperature conditions can also affect towing. For example, towing a heavy trailer in high outside temperatures on graded roads can affect engine performance and cause overheating. The engine protection mode, which helps reduce the chance of engine damage, could activate and automatically decrease engine power. Vehicle speed may decrease under high load. Plan your trip carefully to account for trailer and vehicle load, weather and road conditions.

⚠ WARNING

Overheating can result in reduced engine power and vehicle speed. The reduced speed may be lower than other traffic, which could increase the chance of a collision. Be especially careful when driving. If the vehicle cannot maintain a safe driving speed, pull to the side of the road in a safe area. Allow the engine to cool and return to normal operation. See "If your vehicle overheats" in the "In case of emergency" section of this manual.

⚠ CAUTION

Vehicle damage resulting from improper towing procedures is not covered by NISSAN warranties.

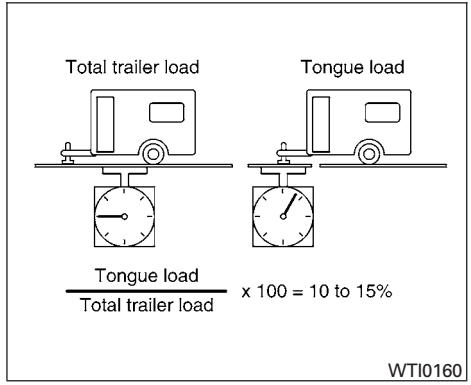

Tongue load

Keep the tongue load between 10 - 15 percent of the total trailer load or use the trailer tongue load specified by the trailer manufacturer. The tongue load must be within the maximum tongue load limits shown in the following "Towing Load/Specification" chart. If the tongue load becomes excessive, rearrange cargo to allow for proper tongue load.

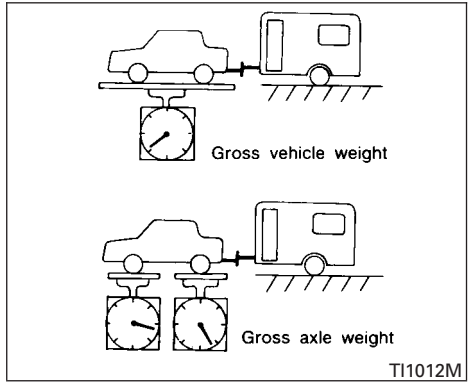

Maximum Gross Vehicle Weight (GVW)/Maximum Gross Axle Weight (GAW)

The GVW of the towing vehicle must not exceed the Gross Vehicle Weight Rating (GVWR) shown on the F.M.V.S.S./C.M.V.S.S. certification label. The GVW equals the combined weight of the unloaded vehicle, passengers, luggage, hitch, trailer tongue load and any other optional equipment. In addition, front or rear GAW must not exceed the Gross Axle Weight Rating (GAWR) shown on the F.M.V.S.S./C.M.V.S.S. certification label.

Towing capacities are calculated assuming a base vehicle with driver and any options required to achieve the rating. Additional passengers, cargo and/or optional equipment, such as the trailer hitch, will add weight to the vehicle and reduce your vehicle's maximum towing capacity and trailer tongue load.

The vehicle and trailer need to be weighed to confirm the vehicle is within the GVWR, Front GAWR, Rear GAWR, Gross Combined Weight Rating (GCWR) and Towing capacity.

All vehicle and trailer weights can be measured using platform type scales commonly found at truck stops, highway weigh stations, building supply centers or salvage yards.

To determine the available payload capacity for tongue load, use the following procedure.

1. Locate the GVWR on the F.M.V.S.S./C.M.V.S.S. certification label.
2. Weigh your vehicle on the scale with all of the passengers and cargo that are normally in the vehicle when towing a trailer.
3. Subtract the actual vehicle weight from the GVWR. The remaining amount is the available maximum tongue load.

To determine the Gross Trailer Weight, weigh your trailer on a scale with all equipment and cargo, that are normally in the trailer when it is towed. Make sure the Gross Trailer Weight is not more than the Gross Trailer Weight Rating shown on the trailer and is not more than the calculated available maximum towing capacity.

Also weigh the front and rear axles on the scale to make sure the Front Gross Axle Weight and Rear Gross Axle Weight are not more than Front Gross Axle Weight and Rear Gross Axle Weight on the F.M.V.S.S./C.M.V.S.S. certification label. The cargo in the trailer and vehicle may need to be moved or removed to meet the specified ratings.

Example:

- Gross Vehicle Weight (GVW) as weighed on a scale - including passengers, cargo and hitch - 4,103 lb. (1861 kg).
- Gross Vehicle Weight Rating (GVWR) from F.M.V.S.S./C.M.V.S.S. certification label - 4,203 lb. (1906 kg).
- Maximum Towing Load from "Towing Load/Specification" chart - 1,000 lb. (454 kg).

4,203 lb. (1906 kg)	GVWR
– 4,103 lb. (1861 kg)	GVW
= 100 lb. (45 kg)	Available for tongue weight
1,000 lb. (454 kg)	Capacity available for towing
100 lb. (45 kg)	Available tongue weight
/ 1,000 lb. (454 kg)	Available capacity
=	10 % tongue weight

The available towing capacity may be less than the maximum towing capacity due to the passenger and cargo load in the vehicle.

Remember to keep trailer tongue weight between 10 - 15% of the trailer weight or within the trailer tongue load specification recommended by the trailer manufacturer. If the tongue load becomes excessive, rearrange the cargo to obtain the proper tongue load. Do not exceed the maximum tongue weight specification shown in the "Towing load/specification" chart even if the calculated available tongue weight is greater than 15%. If the calculated tongue weight is less than 10% , reduce the total trailer weight to match the available tongue weight.

Always verify that available capacities are within the required ratings.

TOWING LOAD/SPECIFICATION

TOWING LOAD / SPECIFICATION	
	UNIT: lb (kg)
MAXIMUM TOWING LOAD	1,000 (454)
MAXIMUM TONGUE LOAD	100 (45)

TOWING SAFETY

Trailer hitch

Choose a proper hitch for your vehicle and trailer. Make sure the trailer hitch is securely attached to the vehicle, to help avoid personal injury or property damage due to sway caused by crosswinds, rough road surfaces or passing trucks.

⚠ WARNING

Trailer hitch components have specific weight ratings. Your vehicle may be capable of towing a trailer heavier than the weight rating of the hitch components. Never exceed the weight rating of the hitch components. Doing so can cause serious personal injury or property damage.

Hitch ball

Choose a hitch ball of the proper size and weight rating for your trailer:

- The required hitch ball size is stamped on most trailer couplers. Most hitch balls also have the size printed on the top of the ball.
- Choose the proper class hitch ball based on the trailer weight.
- The diameter of the threaded shank of the hitch ball must be matched to the ball mount hole diameter. The hitch ball shank should be no more than 1/16” smaller than the hole in the ball mount.
- The threaded shank of the hitch ball must be long enough to be properly secured to the ball mount. There should be at least 2 threads showing beyond the lock washer and nut.

Ball mount

The hitch ball is attached to the ball mount and the ball mount is inserted into the hitch receiver. Choose a proper class ball mount based on the trailer weight. Additionally, the ball mount should be chosen to keep the trailer tongue level with the ground.

Sway control device

Sudden maneuvers, wind gusts, and buffeting caused by other vehicles can affect trailer handling. Sway control devices may be used to help control these affects. If you choose to use one, contact a reputable trailer hitch supplier to make sure the sway control device will work with the vehicle, hitch, trailer and the trailer’s brake system. Follow the instructions provided by the manufacturer for installing and using the sway control device.

Class I hitch

Class I trailer hitch equipment (receiver, ball mount and hitch ball) can be used to tow trailers of a maximum weight of 2,000 lb (909 kg).

You may add Class I trailer hitch equipment that has a 2,000 lb (909 kg) maximum weight rating to the vehicle, but your vehicle is only capable of towing the maximum trailer weights shown in the Towing Load/Specification chart earlier in this section.

⚠ CAUTION

- **Do not use axle-mounted hitches.**
- **The hitch should not be attached to or affect the operation of the impact-absorbing bumper.**
- **Do not modify the vehicle exhaust system, brake system, etc. to install a trailer hitch.**
- **To reduce the possibility of additional damage if your vehicle is struck from the rear, where practical, remove the receiver when not in use.**
- **After the hitch is removed, seal the bolt holes to prevent exhaust fumes, water or dust from entering the passenger compartment.**
- **Regularly check that all trailer hitch mounting bolts are securely mounted.**

Tire pressures

- When towing a trailer, inflate the vehicle tires to the recommended cold tire pressure indicated on the Tire and Loading Information label.
- Trailer tire condition, size, load rating and proper inflation pressure should be in accordance with the trailer and tire manufacturer's specifications.

Safety chains

Always use suitable safety chains between your vehicle and the trailer. The safety chains should be crossed and should be attached to the hitch, not to the vehicle bumper or axle. Be sure to leave enough slack in the chains to permit turning corners.

Trailer lights

⚠ CAUTION

When splicing into the vehicle electrical system, a commercially available power-type module/converter must be used to provide power for all trailer lighting. This unit uses the vehicle battery as a direct power source for all trailer lights while using the vehicle tail light, stoplight and turn signal circuits as a signal source. The module/converter must draw no more that 15 milliamps from the stop and tail lamp circuits. Using a module/converter that exceeds these power requirements may damage the vehicle's electrical system. See a reputable trailer dealer to obtain the proper equipment and to have it installed.

Trailer lights should comply with federal and/or local regulations. For assistance in hooking up trailer lights, contact a NISSAN dealer or reputable trailer dealer.

Trailer brakes

If your trailer is equipped with a braking system, make sure it conforms to federal and/or local regulations and that it is properly installed.

⚠ WARNING

Never connect a trailer brake system directly to the vehicle brake system.

Pre-towing tips

- Be certain your vehicle maintains a level position when a loaded and/or unloaded trailer is hitched. Do not drive the vehicle if it has an abnormal nose-up or nose-down condition; check for improper tongue load, overload, worn suspension or other possible causes of either condition.
- Always secure items in the trailer to prevent load shift while driving.
- Keep the cargo load as low as possible in the trailer to keep the trailer center of gravity low.
- Load the trailer so approximately 60% of the trailer load is in the front half and 40% is in the back half. Also make sure the load is balanced side to side.
- Check your hitch, trailer tire pressure, vehicle tire pressure, trailer light operation, and trailer wheel lug nuts every time you attach a trailer to the vehicle.
- Be certain your rearview mirrors conform to all federal, state or local regulations. If not, install any mirrors required for towing before driving the vehicle.
- Determine the overall height of the vehicle and trailer so the required clearance is known.

Trailer towing tips

In order to gain skill and an understanding of the vehicle's behavior, you should practice turning, stopping and backing up in an area which is free from traffic. Steering stability and braking performance will be somewhat different than under normal driving conditions.

- Always secure items in the trailer to prevent load shift while driving.
- Lock the trailer hitch coupler with a pin or lock to prevent the coupler from inadvertently becoming unlatched.
- Avoid abrupt starts, acceleration or stops.
- Avoid sharp turns or lane changes.
- Always drive your vehicle at a moderate speed.
- When backing up, hold the bottom of the steering wheel with one hand. Move your hand in the direction in which you want the trailer to go. Make small corrections and back up slowly. If possible, have someone guide you when you are backing up.

Always block the wheels on both vehicle and trailer when parking. Parking on a slope is not recommended; however, if you must do so:

⚠ CAUTION

If you move the shift selector to the P (Park) position before blocking the wheels and applying the parking brake, transmission damage could occur.

1. Apply and hold the brake pedal.
2. Have someone place blocks on the downhill side of the vehicle and trailer wheels.
3. After the wheel blocks are in place, slowly release the brake pedal until the blocks absorb the vehicle load.
4. Apply the parking brake.
5. Shift the transmission into P (Park).
6. Turn off the engine.

To drive away:

1. Start the vehicle.
2. Apply and hold the brake pedal.
3. Shift the transmission into gear.
4. Release the parking brake.
5. Drive slowly until the vehicle and trailer are clear from the blocks.
6. Apply and hold the brake pedal.
7. Have someone retrieve and store the blocks.

- While going downhill, the weight of the trailer pushing on the tow vehicle may deteriorate overall handling characteristics. Therefore, to maintain adequate control, reduce your speed and shift to a lower gear. Avoid long or repeated use of the brakes when descending a hill, as this reduces their effectiveness and could cause overheating. Shifting to a lower gear instead provides "engine braking" and reduces the need to brake as frequently.
- If the engine coolant temperature rises to a high temperature, refer to "If your vehicle overheats" in the "In case of emergency" section of this owner's manual.
- Trailer towing requires more fuel than normal circumstances.
- Avoid towing a trailer for your vehicle's first 500 miles (805 km).
- For the first 500 miles (805 km) that you do tow, do not drive over 50 MPH (80 km/h).
- Have your vehicle serviced more often than at intervals specified in the recommended Maintenance Schedule in the "NISSAN Service and Maintenance Guide".
- When making a turn, your trailer wheels will be closer to the inside of the turn than your vehicle wheels. To compensate for this, make a larger than normal turning radius during the turn.
- Crosswinds and rough roads will adversely affect vehicle/trailer handling, possibly causing vehicle sway. When being passed by larger vehicles, be prepared for possible changes in crosswinds that could affect vehicle handling.

Do the following if the trailer begins to sway:

1. Take your foot off the accelerator pedal to allow the vehicle to coast and steer as straight ahead as the road conditions allow. This combination will help stabilize the vehicle
   - Do not correct trailer sway by steering or applying the brakes.
2. When the trailer sway stops, gently apply the brakes and pull to the side of the road in a safe area.
3. Try to rearrange the trailer load so it is balanced as described earlier in this section.

- Be careful when passing other vehicles. Passing while towing a trailer requires considerably more distance than normal passing. Remember, the length of the trailer must also pass the other vehicle before you can safely change lanes.
- Use the Tow Mode or downshift the transmission to a lower gear for engine braking when driving down steep or long hills. This will help slow the vehicle without applying the brakes.
- Avoid holding the brake pedal down too long or too frequently. This could cause the brakes to overheat, resulting in reduced braking efficiency.
- Increase your following distance to allow for greater stopping distances while towing a trailer. Anticipate stops and brake gradually.
- NISSAN recommends that the cruise control not be used while towing a trailer.

- Some states or provinces have specific regulations and speed limits for vehicles that are towing trailers. Obey the local speed limits.
- Check your hitch, trailer wiring harness connections, and trailer wheel lug nuts after 50 miles (80 km) of travel and at every break.
- When launching a boat, don't allow the water level to go over the exhaust tail pipe or rear bumper.
- Make sure you disconnect the trailer lights before backing the trailer into the water or the trailer lights may burn out.

When towing a trailer, final drive gear oil should be replaced and transmission oil/fluid should be changed more frequently. For additional information, see the "Maintenance and do-it-yourself" section earlier in this manual.

FLAT TOWING

Towing your vehicle with all four wheels on the ground is sometimes called flat towing. This method is sometimes used when towing a vehicle behind a recreational vehicle, such as a motor home.

⚠ CAUTION

- **Failure to follow these guidelines can result in severe transmission damage.**
- **Whenever flat towing your vehicle, always tow forward, never backward.**
- **DO NOT tow any continuously variable transmission vehicle with all four wheels on the ground (flat towing). Doing so WILL DAMAGE internal transmission parts due to lack of transmission lubrication.**
- **For emergency towing procedures refer to "Towing recommended by NISSAN" in the "In case of emergency" section of this manual.**

Manual Transmission (if so equipped)

- Always tow with the manual transmission in Neutral.
- After towing 500 miles (805 km), start and idle the engine with the transmission in Neutral for two minutes. Failure to idle the engine after every 500 miles (805 km) of towing may cause damage to internal transmission parts.

Continuously Variable Transmission (if so equipped)

To tow a vehicle equipped with a continuously variable transmission, an appropriate vehicle dolly **MUST** be placed under the towed vehicle's drive wheels. **Always** follow the dolly manufacturer's recommendations when using their product.

DOT (Department of Transportation) Quality Grades: All passenger car tires must conform to federal safety requirements in addition to these grades.

Quality grades can be found where applicable on the tire sidewall between tread shoulder and maximum section width. For example:

Treadwear 200 Traction AA Temperature A

Treadwear

The treadwear grade is a comparative rating based on the wear rate of the tire when tested under controlled conditions on a specified government test course. For example, a tire graded 150 would wear one and one-half (1 1/2) times as well on the government course as a tire graded 100. The relative performance of tires depends upon the actual conditions of their use, however, and may depart significantly from the norm due to variations in driving habits, service practices and differences in road characteristics and climate.

Traction AA, A, B and C

The traction grades, from highest to lowest, are AA, A, B, and C. Those grades represent the tire's ability to stop on wet pavement as measured under controlled conditions on specified government test surfaces of asphalt and concrete. A tire marked C may have poor traction performance.

⚠ WARNING

The traction grade assigned to this tire is based on straight-ahead braking traction tests, and does not include acceleration, cornering, hydroplaning, or peak traction characteristics.

Temperature A, B and C

The temperature grades are A (the highest), B, and C, representing the tire's resistance to the generation of heat, and its ability to dissipate heat when tested under controlled conditions on a specified indoor laboratory test wheel. Sustained high temperature can cause the material of the tire to degenerate and reduce tire life, and excessive temperature can lead to sudden tire failure. The grade C corresponds to a level of performance which all passenger car tires must meet under the Federal Motor Safety Standard No. 109. Grades B and A represent higher levels of performance on the laboratory test wheel than the minimum required by law.

⚠ WARNING

The temperature grade for this tire is established for a tire that is properly inflated and not overloaded. Excessive speed, under-inflation, or excessive loading, either separately or in combination, can cause heat build-up and possible tire failure.

EMISSION CONTROL SYSTEM WARRANTY

Your NISSAN vehicle is covered by the following emission warranties:

For USA

1. Emission Defects Warranty
2. Emissions Performance Warranty

Details of this warranty may be found with other vehicle warranties in your Warranty Information Booklet which comes with your NISSAN vehicle. If you did not receive a Warranty Information Booklet, or it is lost, you may obtain a replacement by writing to:

- Nissan North America, Inc.
  Consumer Affairs Department
  P.O. Box 685003
  Franklin, TN 37068-5003

For Canada

Emission Control System Warranty

Details of this warranty may be found with other vehicle warranties in your Warranty Information Booklet which comes with your NISSAN vehicle. If you did not receive a Warranty Information Booklet, or it is lost, you may obtain a replacement by writing to:

- Nissan Canada Inc.
  5290 Orbitor Drive
  Mississauga, Ontario, L4W 4Z5

REPORTING SAFETY DEFECTS

For USA

If you believe that your vehicle has a defect which could cause a crash or could cause injury or death, you should immediately inform the National Highway Traffic Safety Administration (NHTSA) in addition to notifying NISSAN.

If NHTSA receives similar complaints, it may open an investigation, and if it finds that a safety defect exists in a group of vehicles, it may order a recall and remedy campaign. However, NHTSA cannot become involved in individual problems between you, your dealer, or NISSAN.

To contact NHTSA, you may call the Vehicle Safety Hotline toll-free at 1-888-327-4236 (TTY: 1-800-424-9153); go to http://www.safercar.gov; or write to: Administrator, NHTSA, 400 Seventh Street, SW., Washington, D.C. 20590. You can also obtain other information about motor vehicle safety from http://www.safercar.gov.

You may notify NISSAN by contacting our Consumer Affairs Department, toll-free, at 1-800-NISSAN-1.

For Canada

If you believe that your vehicle has a defect which could cause a crash or could cause injury or death, you should immediately inform Transport Canada in addition to notifying NISSAN.

If Transport Canada receives complaints, it may open an investigation, and if it finds that a safety defect exists in a group of vehicles, it may request that NISSAN conduct a recall campaign. However, Transport Canada cannot become involved in individual problems between you, your dealer, or NISSAN.

You may contact Transport Canada's Defect Investigations and Recalls Division toll free at 1-800-333-0510. You may also report safety defects online at: https://wwwapps.tc.gc.ca/Saf-Sec-Sur/7/PCDB-BDPP/Index.aspx.

Additional information concerning motor vehicle safety may be obtained from Transport Canada's Road Safety Information Centre at 1-800-333-0371 or online at www.tc.gc.ca/roadsafety.

To notify NISSAN of any safety concerns please contact our Consumer Information Centre toll free at 1-800-387-0122.

READINESS FOR INSPECTION/ MAINTENANCE (I/M) TEST

Due to legal requirements in some states and Canadian Provinces, your vehicle may be required to be in what is called the "ready condition" for an Inspection/Maintenance (I/M) test of the emission control system.

The vehicle is set to the "ready condition" when it is driven through certain driving patterns. Usually, the ready condition can be obtained by ordinary usage of the vehicle.

If a powertrain system component is repaired or the battery is disconnected, the vehicle may be reset to a "not ready" condition. Before taking the I/M test, check the vehicle's inspection/maintenance test readiness condition. Place the ignition switch in the ON position without starting the engine. If the Malfunction Indicator Light (MIL) comes on steady for 20 seconds and then blinks for 10 seconds , the I/M test condition is "not ready". If the MIL does not blink after 20 seconds, the I/M test condition is "ready". Contact a NISSAN dealer to set the "ready condition" or to prepare the vehicle for testing.

EVENT DATA RECORDERS (EDR)

This vehicle is equipped with an Event Data Recorder (EDR). The main purpose of an EDR is to record, in certain crash or near crash-like situations, such as an air bag deployment or hitting a road obstacle, data that will assist in understanding how a vehicle's systems performed. The EDR is designed to record data related to vehicle dynamics and safety systems for a short period of time, typically 30 seconds or less. The EDR in this vehicle is designed to record such data as:

- How various systems in your vehicle were operating;
- Whether or not the driver and passenger safety belts were buckled/fastened;
- How far (if at all) the driver was depressing the accelerator and/or brake pedal; and,
- How fast the vehicle was traveling.
- Sounds are not recorded.

These data can help provide a better understanding of the circumstances in which crashes and injuries occur. NOTE: EDR data are recorded by your vehicle only if a nontrivial crash situation occurs; no data are recorded by the EDR under normal driving conditions and no personal data (e.g. name, gender, age and crash location) are recorded. However, other parties, such as law enforcement, could combine the EDR data with the type of personally identifying data routinely acquired during a crash investigation.

To read data recorded by an EDR, special equipment is required and access to the vehicle or the EDR is needed. In addition to the vehicle manufacturer and NISSAN dealer, other parties, such as law enforcement, that have the special equipment, can read the information if they have access to the vehicle or the EDR. EDR data will only be accessed with the consent of the vehicle owner or lessee or as otherwise required or permitted by law.

OWNER'S MANUAL/SERVICE MANUAL ORDER INFORMATION

A genuine NISSAN Service Manual is the best source of service and repair information for your vehicle. Filled with wiring diagrams, illustrations and step-by-step diagnostic and adjustment procedures, this manual is the same one used by the factory-trained technicians working at NISSAN dealerships. Also available are genuine NISSAN Owner's Manuals, and genuine NISSAN Service and Owner's Manuals for older NISSAN models.

For USA

For current pricing and availability of genuine **NISSAN Service Manuals** for the 2000 model year and later contact:

1-800-450-9491
www.nissan-techinfo.com

For current pricing and availability of genuine **NISSAN Service Manuals** for the 1999 model year and prior, see a NISSAN dealer, or contact:

1-800-247-5321

For current pricing and availability of genuine **NISSAN Owner's Manuals** for this model year and prior, see a NISSAN dealer, or contact:

1-800-247-5321

For Canada

To purchase a copy of a genuine NISSAN Service Manual or Owner's Manual please contact your nearest NISSAN dealer. For the phone number and location of a NISSAN dealer in your area call the NISSAN Information Center at 1-800-387-0122 and a bilingual NISSAN representative will assist you.

Also available are genuine NISSAN Service and Owner's Manuals for older NISSAN models.

IN THE EVENT OF A COLLISION

Unfortunately, accidents do occur. In this unlikely event, there is some important information you should know.

Many insurance companies routinely authorize the use of non-genuine collision parts in order to cut costs, among other reasons.

Insist on the use of genuine NISSAN collision parts!

If you want your vehicle to be restored using parts made to NISSAN's original exacting specifications – if you want to help it to last and hold its resale value, the solution is simple. **Tell your insurance agent and your repair shop to only use Genuine NISSAN Collision Parts.** NISSAN does not warrant non-NISSAN parts, nor does NISSAN's warranty apply to damage caused by a non-genuine part.

Using Genuine NISSAN Parts can help protect your personal safety, preserve your warranty protection and maintain the resale value of your vehicle. And if your vehicle was leased, using Genuine NISSAN Parts may prevent or limit unnecessary excess wear and tear expenses at the end of your lease.

NISSAN designs its hoods with crumple zones to minimize the risk that the hood will penetrate the windshield of your vehicle in an accident. Non-genuine (imitation) parts may not provide such built-in safeguards. Also, non-genuine parts often show premature wear, rust and corrosion.

Why should you take a chance?

In over 40 states, the law says you must be advised if non-genuine parts are used to repair your vehicle. And some states have enacted laws that restrict insurance companies from authorizing the use of non-genuine collision parts during the new vehicle warranty. These laws help protect you, so you can take action to protect yourself.

It's your right!

If you should need further information visit us at: **www.nissanusa.com** (for U.S. customers) or **www.nissan.ca** (for Canadian customers).

10 Index

A

Air bag (See supplemental restraint system) 1-41
Air bag system
Front (See supplemental front impact air bag system) 1-50
Air bag warning light. 1-57, 2-14
Air cleaner housing filter 8-20
Air conditioner
Air conditioner operation 4-21
Air conditioner service 4-28
Air conditioner specification label 9-12
Air conditioner system refrigerant and oil recommendations 9-6
Heater and air conditioner controls. 4-19, 4-26
Servicing air conditioner 4-28
Air flow charts. 4-22
Alarm system
(See vehicle security system) 2-26
Anchor point locations 1-27
Antenna 4-90
Anti-lock brake warning light. 2-11
Anti-lock Braking System (ABS). 5-25
Armrests 1-9
Audible reminders 2-16
Audio system 4-29
Bluetooth® audio 4-84
Compact disc (CD) player 4-46, 4-52, 4-58, 4-64
FM-AM radio with compact disc (CD) player 4-44
FM/AM/SAT radio with CD/DVD player. .4-54
FM/AM/SAT radio with compact disc (CD) player 4-48
Audio System
iPod® Player 4-72, 4-74
Music Box® hard-disk drive audio system 4-77
Audio system
Radio 4-29
Audio System
Settings 4-55
Audio system
USB interface 4-66, 4-68
Autolight switch. 2-31
Automatic
Automatic power window switch 2-45
Transmission shift selector lock release. .5-16
Automatic anti-glare inside mirror 3-30
Automatic door locks 3-5
AUX jack 4-47, 4-53

B

Battery. 8-16
Charge warning light 2-11
Before starting the engine 5-10
Belt (See drive belt) 8-18
Block heater
Engine 5-29
Bluetooth® audio 4-84
Bluetooth® hands-free phone system 4-91, 4-106
Booster seats 1-38
Brake
Anti-lock Braking System (ABS). 5-25
Brake fluid 8-14
Brake light (See stop light). 8-30
Brake system 5-24
Brake warning light 2-11
Brake wear indicators 2-16, 8-22
Parking brake operation 5-19
Self-adjusting brakes. 8-22
Brakes 8-22
Break-in schedule 5-22
Brightness/contrast button. 4-12
Brightness control
Instrument panel 2-33
Bulb check/instrument panel. 2-10
Bulb replacement 8-30

C

Capacities and recommended fuel/lubricants. 9-2
Cargo (See vehicle loading information) . . .9-13
Car phone or CB radio 4-91
CD care and cleaning 4-87
CD player
(See audio system) 4-46, 4-52, 4-58, 4-64
Check tire pressure. 2-25
Child restraints. 1-21, 1-22, 1-23, 1-25

Precautions on child restraints. 1-23, 1-29, 1-34, 1-38
Top tether strap anchor point locations . .1-27
Child safety rear door lock 3-6
Chimes, audible reminders 2-16
Cleaning exterior and interior 7-2
Clock 4-45, 4-50
(models with navigation system) 4-8
(models without navigation system) 4-45
Clock set 4-8, 4-45
Clutch
Clutch fluid 8-15
C.M.V.S.S. certification label 9-10
Cold weather driving 5-28
Compact disc (CD) player 4-46, 4-52, 4-58, 4-64
Compass display 2-6
Console box 2-41
Console light 2-50
Continuously Variable Transmission (CVT). . .5-11
Continuously Variable Transmission (CVT) fluid 8-13
Driving with Continuously Variable Transmission (CVT) 5-11
Transmission shift selector lock release . .5-16
Control panel buttons 4-2
Brightness/contrast button 4-12
Enter button 4-2
Setting button 4-6
Controls
Heater and air conditioner controls 4-19, 4-26
Coolant
Capacities and recommended fuel/lubricants 9-2
Changing engine coolant 8-9
Checking engine coolant level 8-9
Engine coolant temperature gauge 2-5
Corrosion protection 7-6
Cruise control 5-20
Cup holders 2-40

D

Daytime running light system (Canada only). .2-32
Defroster switch
Rear window and outside mirror defroster switch. 2-29
Digital Versatile Disc (DVD) player 4-63
Dimensions and weights 9-8
Dimmer switch for instrument panel 2-33
Display controls (see control panel buttons) . .4-2
Door locks 3-4
Drive belt 8-18
Driving
Cold weather driving 5-28
Driving with Continuously Variable Transmission (CVT) 5-11
Driving with manual transmission 5-17
Precautions when starting and driving 5-2

E

Economy - fuel 5-22
Emission control information label 9-11
Emission control system warranty 9-25
Engine
Before starting the engine. 5-10
Block heater 5-29
Capacities and recommended fuel/lubricants 9-2
Changing engine coolant 8-9
Changing engine oil 8-11
Changing engine oil filter 8-12
Checking engine coolant level 8-9
Checking engine oil level 8-10
Engine compartment check locations 8-6
Engine coolant temperature gauge 2-5
Engine cooling system 8-8
Engine oil 8-10
Engine oil and oil filter recommendation . . .9-5
Engine oil pressure warning light 2-12
Engine oil viscosity 9-5
Engine serial number 9-10
Engine specifications 9-7
Starting the engine 5-10
Enter button 4-2
Event data recorders 9-26
Exhaust gas (Carbon monoxide) 5-2
Extended storage switch 8-26
Eyeglass case 2-38

F

Flashers
(See hazard warning flasher switch) 2-34
Flat tire 6-2
Floor mat positioning aid 7-5
Fluid
Brake fluid 8-14
Capacities and recommended fuel/lubricants 9-2
Clutch fluid 8-15

Continuously Variable Transmission (CVT) fluid 8-13
Engine coolant. 8-8
Engine oil. 8-10
Power steering fluid 8-14
F.M.V.S.S. certification label. 9-10
Fog light switch 2-34
Front air bag system
(See supplemental restraint system) 1-50
Front seats. 1-2
Fuel
Capacities and recommended fuel/lubricants 9-2
Fuel economy 5-22
Fuel-filler door and cap 3-25
Fuel-filler door lock opener lever 3-25
Fuel gauge. 2-6
Fuel octane rating 9-4
Fuel recommendation 9-3
Loose fuel cap warning. 2-25, 3-25
Fuses 8-23
Fusible links 8-24

G

Garage door opener, HomeLink® Universal Transceiver 2-51
Gas cap 3-25
Gauge
Engine coolant temperature gauge 2-5
Fuel gauge. 2-6
Odometer 2-4
Speedometer 2-4
Tachometer 2-5
Trip odometer 2-4
General maintenance 8-2
Glove box. 2-41
Glove box lock 2-41
Grocery hooks 2-42

H

Hands-free phone system, Bluetooth® 4-91, 4-106
Hazard warning flasher switch 2-34
Headlight and turn signal switch 2-29
Headlight control switch 2-31
Headlights 8-28
Heated seats. 2-35
Heater
Heater and air conditioner controls 4-19, 4-26
Heater operation 4-20, 4-27
HomeLink® Universal Transceiver. 2-51
Hood release. 3-23
Horn 2-35

I

Ignition Switch
Push-Button Ignition Switch 5-7
Immobilizer system 2-27, 3-3, 5-9
Important vehicle information label 9-10
In-cabin microfilter. 8-21
Increasing fuel economy. 5-22
Indicator lights and audible reminders
(See warning/indicator lights and audible reminders) 2-10
Inside automatic anti-glare mirror. 3-30
Inside mirror 3-29
Instrument brightness control. 2-33
Instrument panel 0-8, 2-2
Instrument panel dimmer switch 2-33
Intelligent Key system
Key operating range 3-8, 3-18
Key operation 3-9
Mechanical key 3-3
Remote keyless entry operation . . .3-12, 3-18
Troubleshooting guide 3-16, 3-22
Warning signals. 3-16, 3-22
Interior light. 2-49
Interior trunk lid release 3-24
iPod® Player. 4-72, 4-74
ISOFIX child restraints 1-25

J

Jump starting 6-8

K

Keyfob battery replacement. 8-27
Keyless entry
With Intelligent Key system
(See Intelligent Key system) 3-12, 3-18
Keys, For Intelligent Key system 3-2

L

Labels
Air conditioner specification label 9-12
C.M.V.S.S. certification label 9-10

Emission control information label 9-11
Engine serial number 9-10
F.M.V.S.S. certification label. 9-10
Tire and Loading Information label 9-11
Vehicle identification number (VIN) plate . .9-9
Warning labels (for SRS) 1-56
LATCH (Lower Anchors and Tethers for CHildren) System 1-25
License plate
Installing the license plate. 9-12
Light
Air bag warning light 1-57, 2-14
Brake light (See stop light) 8-30
Bulb check/instrument panel 2-10
Bulb replacement 8-30
Charge warning light 2-11
Console light. 2-50
Fog light switch 2-34
Headlight and turn signal switch 2-29
Headlight control switch 2-31
Headlights 8-28
Interior light. 2-49
Light bulbs 8-28
Low tire pressure warning light 2-12
Low windshield-washer fluid warning light 2-24
Passenger air bag and status light 1-51
Personal lights 2-50
Security indicator light. 2-16
Spotlights (See map light) 2-50
Trunk light 2-51
Warning/indicator lights and audible reminders. 2-10
Lights
Map lights 2-50
Lock
Child safety rear door lock 3-6
Door locks 3-4
Fuel-filler door lock opener lever 3-25
Glove box lock 2-41
Power door locks 3-5
Trunk lid lock opener lever. 3-23
Loose fuel cap warning. 2-25, 3-25
Low fuel warning light 2-13, 2-24
Low tire pressure warning light 2-12
Low windshield-washer fluid warning light. . .2-24
Luggage (See vehicle loading information) . .9-13

M

Maintenance
General maintenance 8-2
Inside the vehicle 8-3
Maintenance precautions. 8-5
Outside the vehicle 8-2
Seat belt maintenance. 1-20
Under the hood and vehicle 8-4
Malfunction indicator light. 2-15
Manual front seat adjustment. 1-2
Map lights 2-50
Map pocket. 2-37
Meters and gauges 2-3
Instrument brightness control. 2-33
Mirror
Automatic anti-glare inside mirror. 3-30
Inside mirror 3-29
Outside mirrors 3-31
Vanity mirror 3-29
Moonroof 2-46
Music Box® hard-disk drive audio system . . .4-77

N

NISSAN Intelligent Key™ 3-17
NISSAN vehicle immobilizer system 2-27, 3-3, 5-9
NISSAN voice recognition system 4-117

O

Octane rating (See fuel octane rating). 9-4
Odometer 2-4
Oil
Capacities and recommended fuel/lubricants 9-2
Changing engine oil 8-11
Changing engine oil filter 8-12
Checking engine oil level 8-10
Engine oil. 8-10
Engine oil and oil filter recommendation. . .9-5
Engine oil viscosity 9-5
Outside mirrors 3-31
Overheat
If your vehicle overheats. 6-10
Owner's manual order form 9-27
Owner's manual/service manual order information 9-27

P

Parking
Parking brake operation 5-19
Parking/parking on hills 5-23
Personal lights 2-50

Phone, Bluetooth® hands-free system 4-91, 4-106
Power
Power door locks 3-5
Power outlet 2-36
Power rear windows 2-45
Power steering fluid 8-14
Power steering system 5-24
Power windows 2-43
Rear power windows 2-45
Precautions
Maintenance precautions 8-5
Precautions on child restraints. 1-23, 1-29, 1-34, 1-38
Precautions on seat belt usage 1-14
Precautions on supplemental restraint system 1-41
Precautions when starting and driving 5-2
Programmable features 4-6
Push starting 6-10

R

Radio
Car phone or CB radio 4-91
FM-AM radio with compact disc (CD) player 4-44
FM/AM/SAT radio with CD/DVD player . .4-54
FM/AM/SAT radio with compact disc (CD) player 4-48
Readiness for inspection maintenance (I/M) test 9-26
Rear parcel shelf
Refitting covers 8-37
Removing covers. 8-37
Rear power windows 2-45
Rear seat. 1-8
RearView Monitor 4-13
Rear window and outside mirror defroster switch. 2-29
Recorders
Event data 9-26
Refrigerant recommendation 9-6
Registering your vehicle in another country . . .9-9
Reporting safety defects (US only) 9-25

S

Safety
Child safety rear door lock 3-6
Child seat belts 1-23, 1-29, 1-34, 1-38
Reporting safety defects (US only) 9-25
Seat adjustment
Front manual seat adjustment 1-2
Front power seat adjustment 1-4
Rear seat adjustment 1-8
Seatback pockets 2-37
Seat belt
Child safety. 1-21
Infants and small children 1-22
Injured Person 1-17
Larger children 1-22
Precautions on seat belt usage 1-14
Pregnant women. 1-17
Seat belt extenders 1-20
Seat belt maintenance. 1-20
Seat belts. 1-14
Shoulder belt height adjustment 1-19
Three-point type with retractor 1-17
Seat belt warning light. 2-14
Seats
Adjustment. 1-2
Front seats 1-2
Heated seats 2-35
Manual front seat adjustment. 1-2
Rear seat. 1-8
Security indicator light. 2-16
Security system (NISSAN vehicle immobilizer system), engine start 2-27, 3-3, 5-9
Self-adjusting brakes 8-22
Service manual order form 9-27
Servicing air conditioner. 4-28
Setting button 4-6
Shifting
Continuously Variable Transmission (CVT) 5-13
Manual transmission 5-18
Shift lock release. 5-16
Shoulder belt height adjustment 1-19
Spark plug replacement 8-19
Speedometer 2-4
Spotlights (See map light) 2-50
SRS warning label 1-56
Starting
Before starting the engine. 5-10
Jump starting 6-8
Precautions when starting and driving 5-2
Push starting 6-10
Starting the engine 5-10
Steering
Power steering fluid 8-14
Power steering system 5-24
Stop light 8-30
Storage 2-37
Sunglasses case. 2-38
Sunglasses holder 2-38

Sunroof 2-46
Sunroof (see Moonroof) 2-46
Sun visors 3-28
Supplemental air bag warning light . . .1-57, 2-14
Supplemental front impact air bag system . . .1-50
Supplemental restraint system
Information and warning labels 1-56
Precautions on supplemental restraint system 1-41
Supplemental restraint system (Supplemental air bag system) 1-41
Switch
Autolight switch 2-31
Automatic power window switch 2-45
Fog light switch 2-34
Hazard warning flasher switch 2-34
Headlight and turn signal switch 2-29
Headlight control switch 2-31
Power door lock switch 3-5
Rear window and outside mirror defroster switch. 2-29
Turn signal switch 2-33
Vehicle dynamic control (VDC) off switch. 2-36
Windshield wiper and washer switch . . .2-28

T

Tachometer 2-5
Temperature gauge
Engine coolant temperature gauge 2-5
Theft (NISSAN vehicle immobilizer system), engine start 2-27, 3-3, 5-9
Three-way catalyst 5-2
Tire
Flat tire 6-2
Spare tire 6-4, 8-49
Tire and Loading Information label 9-11
Tire chains 8-46
Tire placard. 9-11
Tire pressure 8-38
Tire rotation. 8-47
Types of tires 8-45
Uniform tire quality grading 9-24
Wheels and tires. 8-38
Wheel/tire size. 9-8
Tire pressure
Low tire pressure warning light 2-12
Tire Pressure Monitoring System (TPMS) 5-3
Towing
Flat towing 9-23
Towing load/specification 9-19
Tow truck towing. 6-11
Trailer towing. 9-16
Transceiver
HomeLink® Universal Transceiver. 2-51
Transmission
Continuously Variable Transmission (CVT) fluid 8-13
Driving with Continuously Variable Transmission (CVT) 5-11
Driving with manual transmission 5-17
Shift selector lock release. 5-16
Travel (See registering your vehicle in another country) 9-9
Trip odometer 2-4
Trunk access through the rear seat 1-8
Trunk lid lock opener lever. 3-23
Trunk light 2-51
Turn signal switch 2-33

U

Uniform tire quality grading 9-24
USB interface
Audio file operation 4-67, 4-69
Video file operation 4-70

V

Vanity mirror 3-29
Variable voltage control system. 8-18
Vehicle dimensions and weights 9-8
Vehicle dynamic control (VDC) off switch . . .2-36
Vehicle dynamic control (VDC) system. 5-26
Vehicle identification 9-9
Vehicle identification number (VIN) (Chassis number) 9-9
Vehicle identification number (VIN) plate 9-9
Vehicle loading information 9-13
Vehicle recovery 6-14
Vehicle security system 2-26
Vehicle security system (NISSAN vehicle immobilizer system), engine start 2-27, 3-3, 5-9
Ventilators 4-18
Visors 3-28
Voice recognition system 4-117

W

Warning
Air bag warning light 1-57, 2-14
Anti-lock brake warning light 2-11
Battery charge warning light 2-11
Brake warning light 2-11

Engine oil pressure warning light 2-12
Hazard warning flasher switch 2-34
Low fuel warning light 2-13, 2-24
Low tire pressure warning light 2-12
Low windshield-washer fluid warning light 2-24
Passenger air bag and status light 1-51
Seat belt warning light. 2-14
Vehicle security system 2-26
Warning/indicator lights and audible reminders. 2-10
Warning labels (for SRS) 1-56
Warning lights 2-10
Washer switch
Windshield wiper and washer switch . . .2-28
Weights (See dimensions and weights). 9-8
Wheels and tires. 8-38
Wheel/tire size. 9-8
When traveling or registering your vehicle in another country 9-9
Windows
Locking passengers' windows 2-45
Power rear windows. 2-45
Power windows 2-43
Rear power windows 2-45
Windshield-washer fluid. 8-15
Windshield wiper and washer switch 2-28
Wiper
Windshield wiper and washer switch . . .2-28
Wiper blades. 8-21

GAS STATION INFORMATION

RECOMMENDED FUEL:

Use unleaded regular gasoline with an octane rating of at least 87 AKI (Anti-Knock Index) number (Research octane number 91).

⚠ CAUTION

- **Using a fuel other than that specified could adversely affect the emission control system, and may also affect the warranty coverage.**
- **Under no circumstances should a leaded gasoline be used, because this will damage the three-way catalyst.**
- **Do not use E-85 fuel in your vehicle. Your vehicle is not designed to run on E-85 fuel. Using E-85 fuel can damage the fuel system components and is not covered by the NISSAN new vehicle limited warranty.**

For additional information, see “Capacities and recommended fuel/lubricants” in the “Technical and consumer information” section.

RECOMMENDED ENGINE OIL:

- Engine oil with API Certification Mark
- Viscosity SAE 5W-30

See “Engine oil and oil filter recommendations” in the “Technical and consumer information” section of this manual.

COLD TIRE PRESSURE:

See Tire and Loading Information label.

The label is typically located on the driver side center pillar or on the driver’s door. For additional information, see “Wheels and tires” in the “Maintenance and do-it-yourself” section of this manual.

RECOMMENDED NEW VEHICLE BREAK-IN PROCEDURE:

During the first 1,200 miles (2,000 km) of vehicle use, follow the recommendations outlined in the “Break-in schedule” information found in the “Starting and driving” section of this manual. Follow these recommendations for the future reliability and economy of your new vehicle. Failure to follow these recommendations may result in vehicle damage or shortened engine life.

Printing : November 2010 (16)
Publication No.: OM1E 0L32U1
Printed in U.S.A.

L32-D