CHRYSLER

Town & Country

2010

OWNER'S MANUAL

VEHICLES SOLD IN CANADA

With respect to any Vehicles Sold in Canada, the name Chrysler Group LLC shall be deemed to be deleted and the name Chrysler Canada Inc. used in substitution therefore.

DRIVING AND ALCOHOL

Drunken driving is one of the most frequent causes of accidents.

Your driving ability can be seriously impaired with blood alcohol levels far below the legal minimum. If you are drinking, don't drive. Ride with a designated non-drinking driver, call a cab, a friend, or use public transportation.

WARNING!
Driving after drinking can lead to an accident. Your perceptions are less sharp, your reflexes are slower, and your judgment is impaired when you have been drinking. Never drink and then drive.

This manual illustrates and describes the operation of features and equipment that are either standard or optional on this vehicle. This manual may also include a description of features and equipment that are no longer available or were not ordered on this vehicle. Please disregard any features and equipment described in this manual that are not on this vehicle.

Chrysler Group LLC reserves the right to make changes in design and specifications, and/or make additions to or improvements to its products without imposing any obligation upon itself to install them on products previously manufactured.

Copyright © 2009 Chrysler Group LLC

TABLE OF CONTENTS

SECTION		PAGE
1	INTRODUCTION	3
2	THINGS TO KNOW BEFORE STARTING YOUR VEHICLE	9
3	UNDERSTANDING THE FEATURES OF YOUR VEHICLE	107
4	UNDERSTANDING YOUR INSTRUMENT PANEL	227
5	STARTING AND OPERATING	323
6	WHAT TO DO IN EMERGENCIES	411
7	MAINTAINING YOUR VEHICLE	433
8	MAINTENANCE SCHEDULES	489
9	IF YOU NEED CONSUMER ASSISTANCE	507
10	INDEX	517

INTRODUCTION

CONTENTS

■ Introduction 4
■ How To Use This Manual 4
■ Warnings And Cautions 6
■ Vehicle Identification Number 6
■ Vehicle Modifications/Alterations 7

INTRODUCTION

Congratulations on selecting your new Chrysler Group LLC vehicle. Be assured that it represents precision workmanship, distinctive styling, and high quality - all essentials that are traditional to our vehicles.

This Owner's Manual has been prepared with the assistance of service and engineering specialists to acquaint you with the operation and maintenance of your vehicle. It is supplemented by a Warranty Information Booklet, located on the DVD, and various customer-oriented documents. Please take the time to read these publications carefully. Following the instructions and recommendations in this manual will help assure safe and enjoyable operation of your vehicle.

NOTE: After you read the manual, it should be stored in the vehicle for convenient referencing and remain with the vehicle when sold, so that the new owner will be aware of all safety warnings.

When it comes to service, remember that your authorized dealer knows your vehicle best, has factory-trained technicians and genuine MOPAR® parts, and cares about your satisfaction.

HOW TO USE THIS MANUAL

Consult the Table of Contents to determine which section contains the information you desire.

Since the specification of your vehicle depends on the items of equipment ordered, certain descriptions and illustrations may differ from your vehicle's equipment

The detailed index at the back of this Owner's Manual contains a complete listing of all subjects.

Consult the following table for a description of the symbols that may be used on your vehicle or throughout this Owner's Manual:

WATER IN FUEL
REAR WINDOW WIPER
WINDSHIELD WIPER INTERMITTENT
EXTERIOR BULB FAILURE
HIGH BEAM
TURN SIGNALS
UPPER AIR OUTLET
HEATED SEAT LOW
DOOR LOCK
ADJUSTABLE PEDALS
ELECTRONIC SPEED CONTROL
ESP BAS
ELECTRONIC STABILITY PROGRAM / BRAKE ASSIST SYSTEM
FUEL
REAR WINDOW INTERMITTENT WIPER
WINDSHIELD WASHER
MASTER LIGHTING SWITCH
LOW BEAM
KEY ACTIVATE (POWER OUTLET)
UPPER AND LOWER AIR OUTLET
HEATED SEAT HIGH
WINDOW LIFT
TIRE PRESSURE MONITOR
HILL DESCENT CONTROL
BRAKE
BRAKE SYSTEM WARNING PARKING BRAKE
FUEL FILL SIDE
REAR WINDOW WASHER
WINDSHIELD WASHER FLUID LEVEL
DOME LIGHT
FRONT FOG LIGHT
HOOD RELEASE
LOWER AIR OUTLET
RECIRCULATION
CONVERTIBLE 4 WINDOW DOWN
TRACTION CONTROL
AWD!
ALL WHEEL DRIVE
ABS
FAILURE OF ANTI-LOCK BRAKING SYSTEM
ENGINE OIL
REAR WINDOW DEFROST
WINDSHIELD, ELECTRICALLY HEATED
PARK LIGHTS
REAR FOG LAMP
LIFTGATE RELEASE AND LIFTGATE OPEN
DEFROST AND LOWER AIR OUTLET
VENTILATING FAN
WINDOW LOCK
ELECTRONIC THROTTLE CONTROL
4WD!
FOUR WHEEL DRIVE
BRAKE
BRAKE SYSTEM WARNING PARKING BRAKE
BATTERY CHARGING
HEATED MIRROR
WINDSHIELD DEFROST
INSTRUMENT PANEL ILLUMINATION
SEAT BELT
SLIDING DOOR
TRUNK / DECK RELEASE
AIR CONDITIONING
CHILD SEAT TETHER ANCHOR
VOICE RECOGNITION BUTTON
WARNING
TOW/ HAUL
TOW / HAUL
GLOW PLUG
POWER STEERING FLUID
WINDSHIELD WIPER AND WASHER
SIDE AIRBAG
AIRBAG
SLIDING DOOR
EMERGENCY RELEASE HANDLE
LIGHTER
LOWER ANCHORS AND TETHER FOR CHILDREN (LATCH)
UCONNECT™ BUTTON
HAZARD
4 LOW
FOUR WHEEL DRIVE LOW
MALFUNCTION INDICATOR LIGHT
TRANS OIL TEMP
ENGINE COOLANT TEMPERATURE
SRS AIRBAG
SUPPLEMENTAL RESTRAINT SYSTEM
PASSENGER AIRBAG OFF
DOOR AJAR
CONVERTIBLE TOP DOWN
CONVERTIBLE TOP UP
HORN
SEE OWNER'S MANUAL ISO
A/C PUSH
AIR CONDITIONER
OFF
ELECTRONIC STABILITY CONTROL OFF

010507683

WARNINGS AND CAUTIONS

This Owner's Manual contains **WARNINGS** against operating procedures that could result in an accident or bodily injury. It also contains **CAUTIONS** against procedures that could result in damage to your vehicle. If you do not read this entire manual, you may miss important information. Observe all Warnings and Cautions.

VEHICLE IDENTIFICATION NUMBER

The Vehicle Identification Number (VIN) is found on the left front corner of the instrument panel, visible through the windshield. This number also appears on the Automobile Information Disclosure Label affixed to a window on your vehicle, the vehicle registration and title.

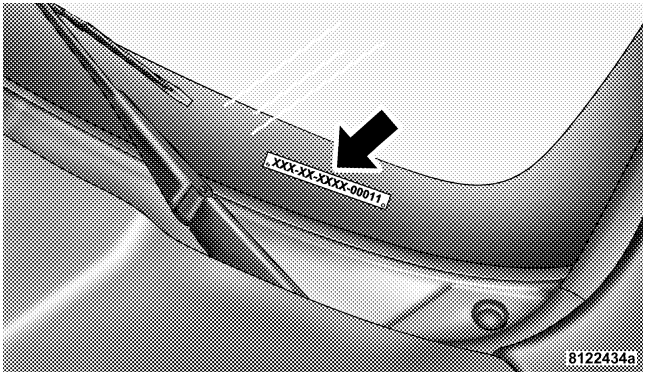

Vehicle Identification Number

NOTE: It is illegal to remove or alter the VIN.

VEHICLE MODIFICATIONS/ALTERATIONS

WARNING!

Any modifications or alterations to this vehicle could seriously affect its roadworthiness and safety and may lead to an accident resulting in serious injury or death.

THINGS TO KNOW BEFORE STARTING YOUR VEHICLE

CONTENTS

- A Word About Your Keys 12
  - Wireless Ignition Node (WIN) 12
- Sentry Key® 14
  - Replacement Keys 15
- Vehicle Security Alarm — If Equipped 16
  - Rearming Of The System 17
- Illuminated Entry — If Equipped 18
- Remote Keyless Entry (RKE) — If Equipped . . 19
  - Using The RKE Transmitter 20
- Remote Starting System — If Equipped 27
  - How To Use Remote Start 27
- Door Locks 30
  - Manual Door Locks 30
  - Power Door Locks — If Equipped 32
- Windows 36
  - Power Vent Windows — If Equipped 36
  - Power Windows 36
- Sliding Side Door 41

- Power Sliding Side Door — If Equipped 42
- Sliding Side Door Child Protection Lock 46

■ Liftgate 48
- Power Liftgate — If Equipped 49

■ Occupant Restraints 52
- Lap/Shoulder Belts 53
- Automatic Locking Retractors (ALR) Mode — If Equipped 60
- Seat Belt Pretensioners — If Equipped 61
- Supplemental Active Head Restraints (AHR) — If Equipped 61
- Enhanced Seat Belt Use Reminder System (BeltAlert®) 65
- Seat Belts And Pregnant Women 67
- Seat Belt Extender 67
- Supplemental Restraint System (SRS) - Airbags 68
- Airbag System Components 69
- Advanced Front Airbag Features 70
- Airbag Deployment Sensors And Controls . . 75
- Event Data Recorder (EDR) 82
- Integrated Child Booster Seat — If Equipped 84
- Integrated Child Seat — If Equipped 86
- Child Restraints 87

■ Rear Seat Delete Feature (Commercial Vehicles Only) — If Equipped. 97

□ Restraining Infants And Small Children With Seat Delete Feature (Commercial Vehicles Only) 98

■ Engine Break-In Recommendations 100

■ Safety Tips 101

□ Transporting Passengers 101

□ Exhaust Gas 101

□ Safety Checks You Should Make Inside The Vehicle 102

□ Periodic Safety Checks You Should Make Outside The Vehicle 104

A WORD ABOUT YOUR KEYS

Your vehicle uses a keyless ignition system. This system consists of a Key Fob with Remote Keyless Entry (RKE) transmitter and a Wireless Ignition Node (WIN) with integral ignition switch. You can insert the Key Fob into the ignition switch with either side up.

Wireless Ignition Node (WIN)

The Wireless Ignition Node (WIN) operates similarly to an ignition switch. It has four operating positions, three with detents and one that is spring-loaded. The detent positions are LOCK, ACC, and ON. The START position is a spring-loaded momentary contact position. When released from the START position, the switch automatically returns to the ON position.

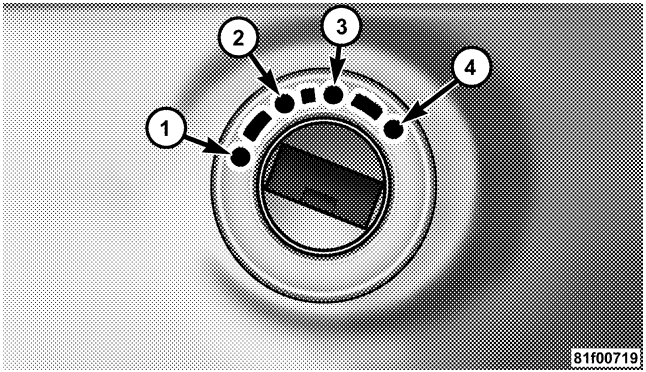

1 — LOCK
2 — ACCESSORY
3 — ON
4 — START

Key Fob

The Key Fob operates the ignition switch. It also contains the Remote Keyless Entry (RKE) transmitter and an emergency key, which stores in the rear of the Key Fob.

The emergency key allows for entry into the vehicle should the battery in the vehicle or the RKE transmitter go dead. The emergency key is also for locking the lower glove compartment. You can keep the emergency key with you when valet parking.

To remove the emergency key, slide the mechanical latch at the top of the Key Fob sideways with your thumb and then pull the key out with your other hand.

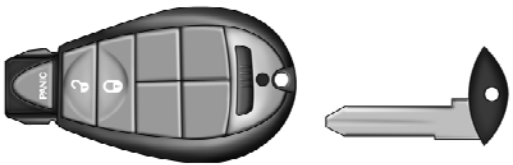

020207436

Emergency Key Removal

NOTE: You can insert the double-sided emergency key into the lock cylinder with either side up.

Removing Key Fob From Ignition

Place the shift lever in PARK. Turn the Key Fob to the LOCK position and then remove the Key Fob.

NOTE: Power window switches will also remain active for up to 90 seconds after the ignition switch has been turned to LOCK, depending upon the accessory delay setting. Opening the front door will cancel this feature.

WARNING!

NEVER leave children alone in a vehicle. Leaving unattended children in a vehicle is dangerous for a number of reasons. A child or others could be seriously or fatally injured. Do not leave the Key Fob in the ignition. A child could operate power windows, other controls, or move the vehicle

CAUTION!

An unlocked car is an invitation to thieves. Always remove the Key Fob from the ignition and lock all doors when leaving the vehicle unattended.

Key-In-Ignition Reminder

Opening the driver's door when the Key Fob is in the ignition and the ignition switch position is LOCK or ACC, a chime will sound to remind you to remove the key.

NOTE: The Key-In-Ignition reminder only sounds when the Key Fob is placed in the LOCK or ACC ignition position.

SENTRY KEY®

The Sentry Key® Immobilizer system prevents unauthorized vehicle operation by disabling the engine. The system does not need to be armed or activated. Operation is automatic, regardless of whether the vehicle is locked or unlocked.

The system uses Key Fob with factory-mated Remote Keyless Entry (RKE) transmitter and Wireless Ignition Node (WIN) to prevent unauthorized vehicle operation. Therefore, only Key Fobs that are programmed to the

vehicle can be used to start and operate the vehicle. The system will shut the engine off in two seconds if an invalid Key Fob is used to start the engine.

After turning the ignition switch to the ON position, the Vehicle Security Light will turn on for three seconds for a bulb check. If the light remains on after the bulb check, it indicates that there is a problem with the electronics. In addition, if the light begins to flash after the bulb check, it indicates that someone used an invalid Key Fob to start the engine. Either of these conditions will result in the engine being shut off after two seconds.

If the Vehicle Security Light turns on during normal vehicle operation (vehicle running for longer than 10 seconds), it indicates that there is a fault in the electronics. Should this occur, have the vehicle serviced as soon as possible by an authorized dealer.

CAUTION!

The Sentry Key® Immobilizer system is not compatible with some after-market remote starting systems. Use of these systems may result in vehicle starting problems and loss of security protection.

All of the Key Fobs provided with your new vehicle have been programmed to the vehicle electronics.

Replacement Keys

NOTE: Only Key Fobs that are programmed to the vehicle electronics can be used to start and operate the vehicle. Once a Key Fob is programmed to a vehicle, it cannot be reprogrammed to any other vehicle.

CAUTION!

Always remove the Key Fobs from the vehicle and lock all doors when leaving the vehicle unattended.

At the time of purchase, the original owner is provided with a four-digit Personal Identification Number (PIN). Keep the PIN in a secure location. This number is required for authorized dealer replacement of Key Fobs. Duplication of Key Fobs may be performed at an authorized dealer, this procedure consists of programming a blank Key Fobs to the vehicle electronics. A blank Key Fob is one that has never been programmed.

NOTE: When having the Sentry Key® Immobilizer system serviced, bring all vehicle Key Fobs with you to the authorized dealer.

Customer Key Programming

Programming Key Fobs or RKE transmitters may be performed at an authorized dealer.

General Information

The Sentry Key® system complies with FCC rules Part 15 and with RSS-210 of Industry Canada. Operation is subject to the following conditions:

- This device may not cause harmful interference.
- This device must accept any interference that may be received, including interference that may cause undesired operation.

VEHICLE SECURITY ALARM — IF EQUIPPED

The Vehicle Security Alarm monitors the vehicle doors for unauthorized entry and the ignition switch for unauthorized operation. When the alarm is activated, the Vehicle Security Alarm provides both audible and visible signals. For the first three minutes, the headlights, park

lamps and/or turn signals will flash and Vehicle Security Light will flash repeatedly and the horn will sound. For an additional 15 minutes, only the headlights, park lamps and/or turn signals and Vehicle Security Light will flash. The engine will run only if a valid key is used to start the vehicle.

Rearming Of The System

The Vehicle Security Alarm will rearm itself after the 15 additional minutes of headlights and Vehicle Security Light flashing, if the Vehicle Security Alarm has not been disabled. If the condition which initiated the alarm is still present, the Vehicle Security Alarm will ignore that condition and monitor the remaining doors and ignition.

Arming The System

Remove the key from the ignition switch and either press a power door lock switch while the driver or passenger door is open, or press the LOCK button on the Remote Keyless Entry (RKE) transmitter. After all the doors are locked and closed, the Vehicle Security Light in the instrument cluster will flash rapidly to signal that the Vehicle Security Alarm is arming. The Vehicle Security Light in the instrument panel cluster will flash rapidly for about 16 seconds to indicate that the alarm is being set. After the alarm is set, the Vehicle Security Light will flash at a slower rate to indicate that the Vehicle Security Alarm is armed.

NOTE: If the Vehicle Security Light stays on continuously during vehicle operation, have the system checked by your authorized dealer.

Disarm The System

Either press the UNLOCK button on the RKE transmitter or insert a valid ignition key into the ignition switch.

NOTE:

- The driver's door key cylinder and the liftgate button on the RKE transmitter cannot arm or disarm the Vehicle Security Alarm.

- The Vehicle Security Alarm remains armed during liftgate entry. Pressing the liftgate button will not disarm the Vehicle Security Alarm. If someone enters the vehicle through the liftgate and opens any door the alarm will sound.
- When the Vehicle Security Alarm is armed, the interior power door lock switches will not unlock the doors.

The Vehicle Security Alarm is designed to protect your vehicle; however, you can create conditions where the system will give you a false alarm. If one of the previously described arming sequences has occurred, the Vehicle Security Alarm will arm regardless of whether you are in the vehicle or not. If you remain in the vehicle and open a door, the alarm will sound. If this occurs, disarm the Vehicle Security Alarm.

If the Vehicle Security Alarm is armed and the battery becomes disconnected, the Vehicle Security Alarm will remain armed when the battery is reconnected; the exterior lights will flash, the horn will sound. If this occurs, disarm the Vehicle Security Alarm.

Tamper Alert

If something has triggered the Vehicle Security Alarm in your absence, the horn will sound three times when you unlock the doors and the Vehicle Security Light will flash for 30 seconds. Check the vehicle for tampering.

Security System Manual Override

The Vehicle Security Alarm will not arm if you lock the doors using the manual door lock plunger.

ILLUMINATED ENTRY — IF EQUIPPED

The courtesy lights will turn on when you use the Remote Keyless Entry (RKE) transmitter or open the doors. This feature is only available if you have RKE.

The lights will fade to off after approximately 30 seconds or they will immediately fade to off once the ignition switch is turned ON.

NOTE:

- The front courtesy overhead console and liftgate lights do not turn on if the dimmer control is in the interior lights ON position (extreme top position).
- The Illuminated Entry System will not operate if the dimmer control is in the extreme downward position.

REMOTE KEYLESS ENTRY (RKE) — IF EQUIPPED

This system allows you to lock or unlock the doors and liftgate, and activate the Panic Alarm, optional power liftgate, left power sliding door, and right power sliding door from distances up to approximately 66 ft (20 m) using a hand-held Key Fob with RKE transmitter. The RKE transmitter does not need to be pointed at the vehicle to activate the system.

NOTE: Inserting the Key Fob with RKE transmitter into the ignition switch disables all buttons on that RKE transmitter; however, the buttons on the remaining RKE transmitters will continue to work. Driving at speeds 5 mph (8 km/h) and above disables all RKE transmitter buttons for all RKE transmitters.

Two RKE transmitters may be supplied with the vehicle. Vehicles built without the powered options will be equipped from the factory with three-button RKE transmitters, and those built with power options will be equipped with up to seven-button RKE transmitters.

Using the RKE Transmitter

Three-button RKE transmitters will provide basic UNLOCK, LOCK and PANIC functions.

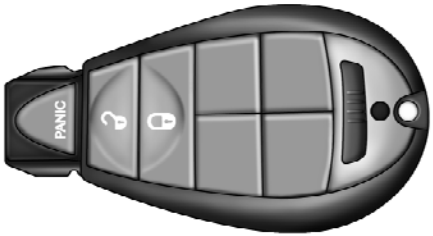

020207434

Key Fob With Three-Button RKE Transmitter

Seven-button RKE transmitters will provide functions that allow the same basic operation as the three-button, but may also be used to operate the power liftgate (optional), power sliding doors, Remote Start feature (optional). Some features can be programmed to the customers preferences. For example, flash headlights or sound horn on LOCK.

020207433

Key Fob With Seven-Button RKE Transmitter

Remote Unlock Doors and Liftgate

Press and release the UNLOCK button on the RKE transmitter once to unlock the driver's side or twice to unlock all doors and liftgate. The Illuminated Entry system also turns on.

Remote Key Unlock on First Press

This feature lets you program the system to unlock either the driver's side, or all doors, on the first press of the UNLOCK button on the RKE transmitter.

- For vehicles equipped with an Electronic Vehicle Information Center (EVIC), refer to "Electronic Vehicle Information Center (EVIC)/Personal Settings (Customer-Programmable Features)" in "Understanding Your Instrument Panel" for further information.
- For vehicles not equipped with the EVIC, the Remote Unlock feature can be enabled or disabled by performing the following steps:

1. Perform this operation while standing outside the vehicle.

2. Press and hold the LOCK button on a programmed RKE transmitter for at least 4 seconds, but no longer than 10 seconds. Then, press and hold the UNLOCK button while still holding the LOCK button.

3. Release both buttons at the same time.

4. Test the feature while outside of the vehicle by pressing the LOCK/UNLOCK buttons on the RKE transmitter with the ignition switch in the LOCK position and the Key Fob removed.

5. Repeat these steps if you want to return this feature to its previous setting.

NOTE: Pressing the LOCK button on the RKE transmitter while you are inside the vehicle will activate the Vehicle Security Alarm. Opening a door with the Vehicle Security Alarm activated will cause the alarm to sound. Press the UNLOCK button to deactivate the Vehicle Security Alarm.

Remote Lock Doors and Liftgate

Press and release the LOCK button on the RKE transmitter to lock all doors and liftgate. The horn will chirp once to acknowledge the signal.

Remote Open Window Feature

This feature allows you to remotely lower both front door windows at the same time. To use this feature, press and release the UNLOCK button on the RKE transmitter and then immediately press and hold the UNLOCK button until the windows lower to the level desired or until they lower completely.

Sound Horn with Remote Lock

This feature will cause the horn to chirp when the doors are locked with the RKE transmitter. This feature can be turned on or turned off. To change the current setting, proceed as follows:

- For vehicles equipped with the EVIC, refer to "Electronic Vehicle Information Center (EVIC)/Personal Settings (Customer-Programmable Features)" in "Understanding Your Instrument Panel" for further information.
- For vehicles not equipped with the EVIC, perform the following steps:

1. Perform this operation while standing outside the vehicle.

2. Press the LOCK button on a programmed RKE transmitter for at least 4 seconds, but no longer than 10 seconds. Then, press the PANIC button while still holding the LOCK button.

3. Release both buttons at the same time.

4. Test the feature while outside of the vehicle by pressing the LOCK button on the RKE transmitter with the ignition switch in the LOCK position and the Key Fob removed.

5. Repeat these steps if you want to return this feature to its previous setting.

NOTE: Pressing the LOCK button on the RKE transmitter while you are in the vehicle will activate the Vehicle Security Alarm. Opening a door with the Vehicle Security Alarm activated will cause the alarm to sound. Press the UNLOCK button to deactivate the Vehicle Security Alarm.

Using the Panic Alarm

To turn the Panic Alarm feature on or off, press and hold the PANIC button on the RKE transmitter for at least one second and release. When the Panic Alarm is on, the headlights and park lights will flash, the horn will pulse on and off, and the interior lights will turn on.

The Panic Alarm will stay on for three minutes unless you turn it off by pressing the PANIC button a second time, or you turn the ignition switch to the ON position.

NOTE: When you turn off the Panic Alarm by pressing the PANIC button a second time, you may have to be closer to the vehicle due to the Radio Frequency (RF) noises of the system.

Power Open/Close Power Liftgate — If Equipped

Press the LIFTGATE button twice on the RKE transmitter within five seconds to Open/Close the Power Liftgate. If the button is pushed while the liftgate is being power closed, the liftgate will reverse to the full open position.

If the liftgate is locked and is not equipped with a powered liftgate, pressing the LIFTGATE button twice will result in the liftgate becoming unlocked for 30 seconds allowing you to manually access the liftgate area.

The power liftgate may also be opened and closed by pressing the LIFTGATE button located on the overhead console.

If equipped with a rear interior switch on the left rear pillar, pushing this switch once will close the liftgate only. The liftgate cannot be opened from this switch.

Power Open/Close Left Power Sliding Door — If Equipped

Press the LEFT Power Sliding Door button twice on the RKE transmitter within five seconds to Power Open/Close the Left Power Sliding Door. If the button on the RKE transmitter is pushed while the door is being power-closed, the door will reverse to the full open position.

Power Open/Close Right Power Sliding Door — If Equipped

Press the RIGHT Power Sliding Door button twice on the RKE transmitter within five seconds to Power Open/Close the Right Power Sliding Door. If the button on the RKE transmitter is pushed while the door is being power-closed, the door will reverse to the full open position.

Turn Off Flash Lights with RKE Lock — If Equipped

This feature will cause the turn signal lights to flash when the doors are locked or unlocked with the RKE transmitter. This feature can be turned on or turned off. To change the current setting, proceed as follows:

- For vehicles equipped with the EVIC, refer to “Electronic Vehicle Information Center (EVIC)/Personal Settings (Customer-Programmable Features)” in “Understanding Your Instrument Panel” for further information.

- For vehicles not equipped with the EVIC, perform the following steps:

1. Perform this operation while standing outside the vehicle.

2. Press and hold the UNLOCK button on a programmed RKE transmitter for at least 4 seconds, but no longer than 10 seconds. Then, press and hold the LOCK button while still holding the UNLOCK button.

3. Release both buttons at the same time.

4. Test the feature while outside of the vehicle by pressing the LOCK/UNLOCK buttons on the RKE transmitter with the ignition switch in the LOCK position and the Key Fob removed.

5. Repeat these steps if you want to return this feature to its previous setting.

NOTE: Pressing the LOCK button on the RKE transmitter while you are in the vehicle will activate the Vehicle Security Alarm. Opening a door with the Vehicle Security Alarm activated will cause the alarm to sound. Press the UNLOCK button to deactivate the Vehicle Security Alarm.

The following table explains the Lamp Flash options.

Function	Which Turn Signal Lamps	Number of Flashes
Lock	All	1
Unlock 1st Press	Left Side	2
Unlock All Doors	All	2
Left Side	Left Side	2
Right Side	Right Side	2
Liftgate	All	2

Programming Additional Transmitters

If you do not have a programmed RKE transmitter, contact your authorized dealer for details.

Transmitter Battery Replacement

The recommended replacement battery is one CR2032 battery.

NOTE:

- Perchlorate Material — special handling may apply. See: www.dtsc.ca.gov/hazardouswaste/perchlorate.
- Do not touch the battery terminals that are on the back housing or the printed circuit board.

1. With the RKE transmitter buttons facing down, use a flat blade to pry the battery door and transmitter housing apart. Make sure not to damage the seal during removal.

2. Remove and replace the battery. Avoid touching the new battery with your fingers. Skin oils may cause battery deterioration. If you touch a battery, clean it with rubbing alcohol.

3. To assemble the RKE transmitter case, snap the battery door and transmitter housing together.

General Information

This device complies with Part 15 of the FCC rules and RSS 210 of Industry Canada. Operation is subject to the following conditions:

- This device may not cause harmful interference.
- This device must accept any interference received, including interference that may cause undesired operation.

If your RKE transmitter fails to operate from a normal distance, check for these two conditions.

1. A weak battery in the RKE transmitter. The expected life of the battery is approximately three years.

2. Closeness to a radio transmitter such as a radio station tower, airport transmitter, and some mobile or CB radios.

REMOTE STARTING SYSTEM — IF EQUIPPED

This system uses the Remote Keyless Entry (RKE) transmitter to start the engine conveniently from outside the vehicle while still maintaining security. The system has a range of approximately 300 ft (91 m).

NOTE: The vehicle must be equipped with an automatic transmission to be equipped with Remote Start.

How to Use Remote Start

All of the following conditions must be met before the engine will Remote Start:

- Shift lever in PARK
- Doors closed
- Hood closed
- Liftgate closed
- Hazard switch off
- Brake switch inactive (brake pedal not pressed)
- Ignition key removed from ignition switch
- Battery at an acceptable charge level
- RKE PANIC button not pressed

WARNING!

- **Do not start or run an engine in a closed garage or confined area. Exhaust gas contains Carbon Monoxide (CO) which is odorless and colorless. Carbon Monoxide is poisonous and can cause serious injury or death when inhaled.**
- **Keep Remote Keyless Entry (RKE) transmitters away from children. Operation of the Remote Start System, windows, door locks or other controls could cause serious injury or death.**

To Enter Remote Start Mode

Press and release the REMOTE START button on the RKE transmitter twice within five seconds. The vehicle doors will lock, parking lights will flash and horn will chirp twice (if programmed). Then, the engine will start and the vehicle will remain in the Remote Start mode for a 15-minute cycle.

NOTE:

- If your power door locks were unlocked, Remote Start will automatically lock the doors.
- The park lights will turn on and remain on during Remote Start mode.
- For security, power window and power sunroof operation (if equipped) are disabled when the vehicle is in the Remote Start mode.
- The engine can be started two consecutive 15-minute cycles with the RKE transmitter. However, the ignition switch must be turned to the ON position before you can repeat the start sequence.

To Enter the Vehicle After Remote Start

To enter the vehicle while the engine is running during a Remote Start, you must first unlock the vehicle using the UNLOCK button on the transmitter. After the vehicle is unlocked, you can enter the vehicle, insert the Key Fob into the ignition switch and move it to the ON position, otherwise the engine will shut off at the end of 15- minute cycle.

To Exit Remote Start Mode and Drive the Vehicle

Before the end of the 15-minute cycle, press and release the UNLOCK button on the RKE transmitter to unlock the doors and disarm the Vehicle Security Alarm (if

equipped). Then, prior to the end of the 15-minute cycle, insert the Key Fob into the ignition switch and turn the switch to the ON position.

NOTE:

- The ignition switch must be in the ON position in order to drive the vehicle.
- For vehicles equipped with the Electronic Vehicle Information Center (EVIC), the message "Insert Key/ Turn to ON" will flash in the EVIC until you insert the Key Fob. Once inserted, the message "Turn to ON" will flash in the EVIC until you turn the Key Fob to ON.

Cancel Remote Start

Remote Starting will also cancel if any of the following occur:

- The engine stalls or engine speed exceeds 2500 rpm
- Any engine warning lights come on
- The hood is opened
- The hazard switch is pressed
- The shift lever is moved out of PARK
- The engine is allowed to run for the entire 15-minute cycle

To Turn Off the Engine While in Remote Start Mode

Press and release the REMOTE START button one time or allow the engine to run for the entire 15 minute cycle.

NOTE: To avoid unintentional shutdowns while in the Remote Start Mode, the system will not allow the Remote Start button to shutdown the engine for two seconds after receiving a valid Remote Start request.

When to Reset Remote Start

The vehicle can be started remotely up to a maximum of two times. The vehicle is also allowed a maximum of one

failed start, where the Remote Starting sequence was initiated but the engine stopped cranking without starting. After either of these conditions, or if the Vehicle Security Alarm system is alarming, or if the PANIC button was pressed, the vehicle must be reset by inserting a valid Key Fob into the ignition switch and rotating the Key Fob to the ON position, and then rotating the Key Fob back to the LOCK/OFF position.

DOOR LOCKS

Manual Door Locks

Lock the front doors by pushing down on the lock plungers on each door trim panel.

If the lock plunger is down when you shut either front door, the door will lock. Make sure the keys are not inside the vehicle before closing the door.

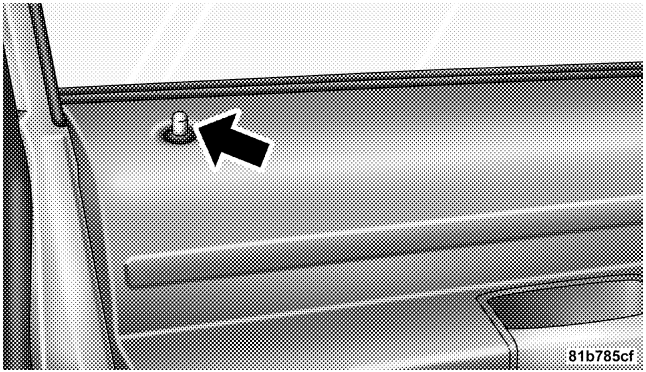

Manual Door Lock

If the lock plunger is rearward when you shut either side sliding door, the door will lock. Make sure the keys are not inside the vehicle before closing the door.

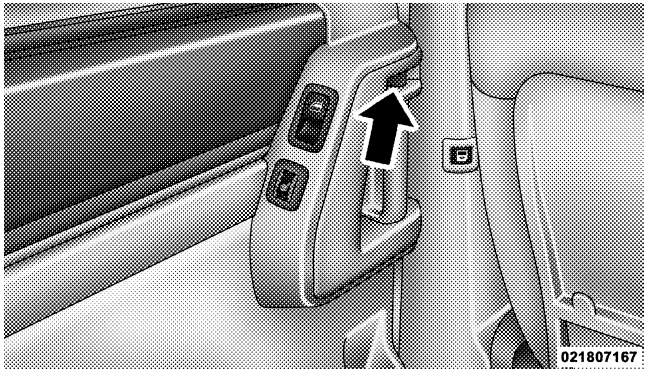

Sliding Door Lock

WARNING!

- **For personal security and safety in the event of an accident, lock the vehicle doors as you drive as well as when you park and leave the vehicle.**
- **When leaving the vehicle, always remove the key from the ignition switch, and lock your vehicle. Do not leave unattended children in the vehicle, or with access to an unlocked vehicle. Unsupervised use of vehicle equipment may cause severe personal injuries and death.**

Power Door Locks — If Equipped

A power door lock switch is on each front door trim panel. Use this switch to lock or unlock the doors.

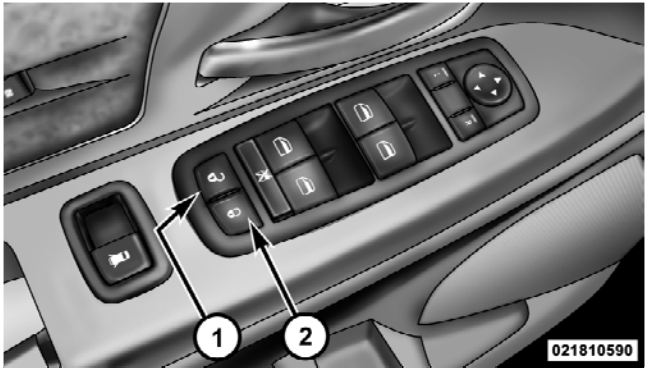

Driver Power Door Lock Switches

1 - Unlock 2 - Lock

If you press the power door lock switch while the Key Fob is in the ignition, and any front door is open, the power locks will not operate. This prevents you from accidentally locking your keys in the vehicle. Removing the Key Fob or closing the door will allow the locks to operate. A chime will sound if the Key Fob is in the ignition switch and a door is open, as a reminder to remove the Key Fob.

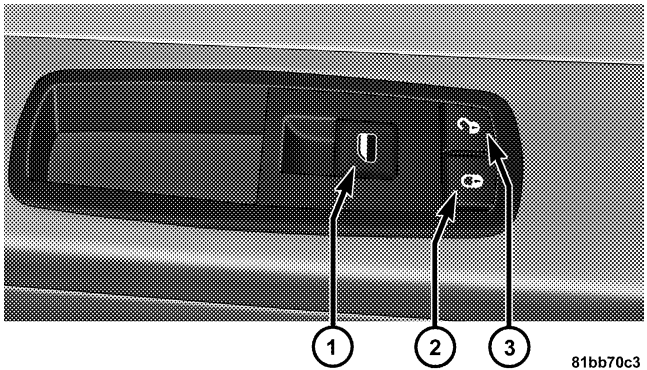

Front Passenger Power Door Switches

1 - Window Open/Close
2 - Doors Lock
3 - Doors Unlock

If you press the power door lock switch while the sliding door is open, the sliding door will lock.

Lock Doors Automatically — If Equipped

If the Lock Doors Automatically feature is enabled, the door locks will lock automatically when the vehicle's speed exceeds 15 mph (24 km/h).

The Lock Doors Automatically feature is enabled when your vehicle is shipped from the assembly plant and can be disabled by using the following procedure:

- On vehicles equipped with the optional Electronic Vehicle Information Center (EVIC), refer to "Electronic Vehicle Information Center (EVIC)/Personal Settings (Customer-Programmable Features)" in "Understanding Your Instrument Panel" for further information.
- On vehicles not equipped with the optional EVIC perform the following steps:

1. Enter your vehicle and close all doors.

2. Fasten your seat belt. (Fastening the seat belt will cancel any chiming that may confuse you during this programming procedure.)

3. Place the Key Fob into the ignition.

4. Within 15-seconds, cycle the ignition Key Fob from the LOCK position to the ON/RUN position a minimum of five times, ending in the ON position **(do not start the engine)**.

5. Within 30 seconds, press the driver's door lock switch in the LOCK direction.

6. A single chime will be heard to indicate the feature has been disabled.

7. To reactivate this feature, repeat the above steps.

8. If a chime is not heard, the program mode was canceled before the feature could be disabled. If necessary, repeat the previous procedure.

The Lock Doors Automatically at 15 mph (24 km/h) feature can be reactivated by repeating the above mentioned procedure or by performing the procedure in the EVIC (if equipped), Personal Settings (Customer-Programmable Features).

Unlock Doors Automatically On Exit — If Equipped

The Unlock Doors Automatically On Exit feature unlocks all of the vehicle doors when any door is opened. This will occur only after the shift lever has been shifted into the PARK position, after the vehicle has been driven (the shift lever has been shifted out of PARK and all doors closed).

The Unlock Doors Automatically On Exit feature will not operate if there is any manual operation of the power door locks (lock or unlock).

- On vehicles equipped with the optional Electronic Vehicle Information Center (EVIC), refer to "Electronic Vehicle Information Center (EVIC)/Personal Settings (Customer-Programmable Features)" in "Understanding Your Instrument Panel" for further information.
- On vehicles not equipped with the optional EVIC perform the following steps:

1. Enter your vehicle and close all doors.

2. Fasten your seat belt. (Fastening the seat belt will cancel any chimes that may be confusing during this programming procedure.)

3. Insert the Key Fob into the ignition switch.

4. Within 15-seconds, cycle the ignition Key Fob from the LOCK position to the ON/RUN position a minimum of five times ending in the ON position **(do not start the engine)**.

5. Within 30 seconds, press the driver's door lock switch in the UNLOCK direction.

6. A single chime will sound to indicate the feature has been changed.

7. To reactivate this feature, repeat the above steps.

8. If a chime is not heard, the program mode was canceled before the feature could be changed. If necessary, repeat the previous procedure.

The Unlock Doors Automatically On Exit feature can be reactivated by repeating the above mentioned procedure or by performing the procedure in the EVIC, Customer-Programmable Features on vehicles so equipped.

NOTE: Use the Lock Doors Automatically at 15 mph (24 km/h) and Unlock Doors Automatically On Exit features in accordance with local laws.

WINDOWS

Power Vent Windows — If Equipped

Switches on the driver's door trim panel let the driver operate the two vent windows from the driver's seat.

Power Vent Window Switch

1 – Power Vent Window Switch Open/Close

Power Windows

You can control either the front or rear windows using switches located on the driver's door trim panel. The switches will operate only when the ignition switch is in the ON or ACC position and during power accessory delay.

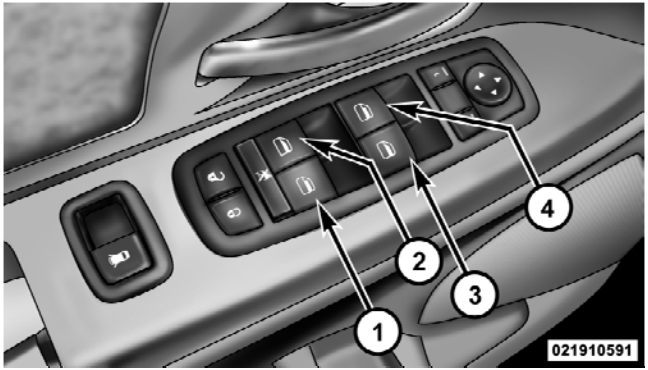

Driver's Power Window Switches

1 – Right Rear
2 – Left Rear
3 – Right Front
4 – Left Front

NOTE: Power Window switches will also remain active for up to 10 minutes after the ignition switch has been turned to LOCK, depending upon the accessory delay setting. Opening a front door will cancel this feature.

Power Window Lockout Switch — If Equipped

The driver may lock out all power windows by depressing the bar switch just below the power window switches.

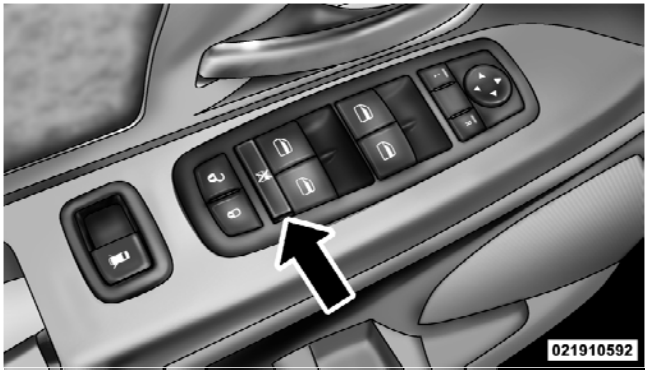

Power Window Lockout Switch

Front Passenger Power Window Switch

There is a single switch on the front passenger's door trim panel which operates the passenger door window and locks and unlocks all doors. The switch will operate only when the ignition switch is in the ON or ACC position and during power accessory delay.

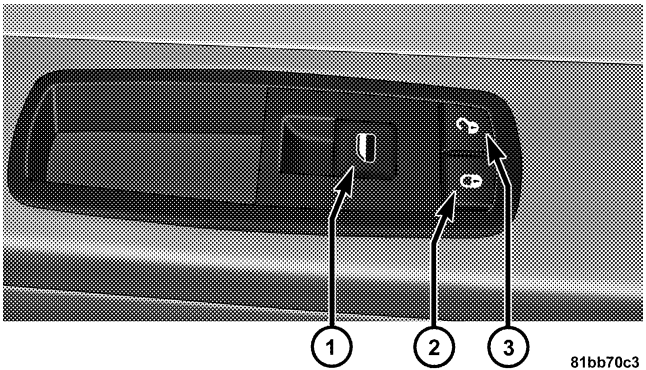

Front Passenger Power Window Switches

1 - Window Open/Close
2 - Doors Lock
3 - Doors Unlock

Sliding Side Door Power Window Switch — If Equipped

Second row passengers may open and close the sliding door window by a single switch on the door handle assembly.

The switches will operate only when the ignition switch is in the ON or ACC position and during power accessory delay.

NOTE: The switches will not operate if the driver has activated the Power Window Lockout.

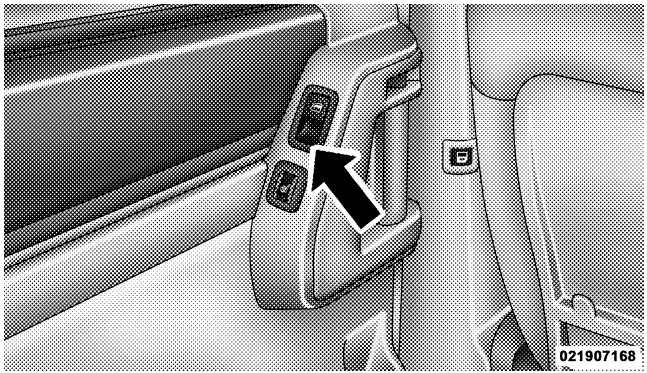

Sliding Door Power Window Switch

NOTE: The sliding door windows do not fully open, stopping several inches above the window sill.

Auto-Down Feature — If Equipped

The front window switches may be equipped with an Auto-Down feature. Press the window switch past the detent, release, and the window will go down automatically.

To open the window part way, press the window switch part way and release it when you want the window to stop.

The power window switches remain active for up to 10 minutes (depending on the accessory delay setting) after the ignition switch has been turned to LOCK. Opening a vehicle front door will cancel this feature.

Auto Up Feature With Anti–Pinch Protection — If Equipped

The front Driver switch may be equipped with an Auto Up feature. Lift the window switch to the second detent, release, and the window will go up automatically.

To stop the window from going all the way up during the Auto Up operation, push down on the switch briefly.

To close the window part way, lift the window switch to the first detent and release when you want the window to stop.

NOTE:

- If the window runs into any obstacle during auto-closure, it will reverse direction and then go back down. Remove the obstacle and use the window switch again to close the window.
- Any impact due to rough road conditions may trigger the auto reverse function unexpectedly during auto-closure. If this happens, pull the switch lightly to the first detent and hold to close window manually.

WARNING!

There is no anti-pinch protection when the window is almost closed. To avoid personal injury be sure to clear your arms, hands, fingers and all objects from the window path before closing.

Auto Up Reset — If Equipped

To reactivate the Auto Up feature, perform the following steps after vehicle power is restored:

1. Pull the window switch up to close the window completely and continue to hold the switch up for an additional two seconds after the window is closed.

2. Push the window switch down firmly to the second detent to open the window completely and continue to hold the switch down for an additional two seconds after the window is fully open.

Wind Buffeting

Wind buffeting can be described as the perception of pressure on the ears or a helicopter-type sound in the ears. Your vehicle may exhibit wind buffeting with the windows down, or the sunroof (if equipped) in certain open or partially open positions. This is a normal occurrence and can be minimized. If the buffeting occurs with the rear windows open, open the front and rear windows together to minimize the buffeting. If the buffeting occurs with the sunroof open, adjust the sunroof opening to minimize the buffeting.

SLIDING SIDE DOOR

The sliding door may be opened from the inside or the outside. Pull outward on the exterior handle to open the sliding door. The sliding door inside handle functions by rocking forward and back. Rocking the handle backwards opens the door and rocking forward releases the hold open latch in order to close the door.

To keep your door operating properly, observe the following guidelines:

- Always open the door smoothly.
- Avoid high impacts against the door stop when opening the door. This is very important when your vehicle is parked on an incline as the door will slide faster in the downhill direction.
- There is a hold-open latch that is activated when the sliding door is fully opened. This latch will keep your sliding door open on any incline. To close the sliding door after the hold-open latch is activated, you must rock the inside handle forward or pull outward on the exterior handle.

Always make sure that the sliding door is fully latched anytime the vehicle is in motion.

NOTE: The left side sliding door cannot be opened while the fuel door is open. This feature operates only when the sliding door is fully closed prior to opening the fuel door.

Power Sliding Side Door — If Equipped

The power sliding door may be opened or closed manually or by using the buttons on the RKE transmitter, overhead console switch, or rear door switch. Pulling the inside or outside power sliding door handle will also power open or close the power sliding door.

NOTE: Pulling the outside power sliding door handle a second time while the sliding door is power opening or power closing will allow the sliding door to be opened or closed manually.

Press the button on the RKE transmitter twice within five seconds to open a power sliding door. When the door is fully open, pressing the button twice within five seconds a second time will close the door.

There are power sliding side door switches located on the trim panel just in front of the power sliding door for the rear seat passengers and in the overhead console for the driver and passengers. Pressing the switch once will open the power sliding door. When the door is fully open pressing the switch a second time will close the door.

NOTE: The power sliding side door must be unlocked before the power sliding door switches will operate.

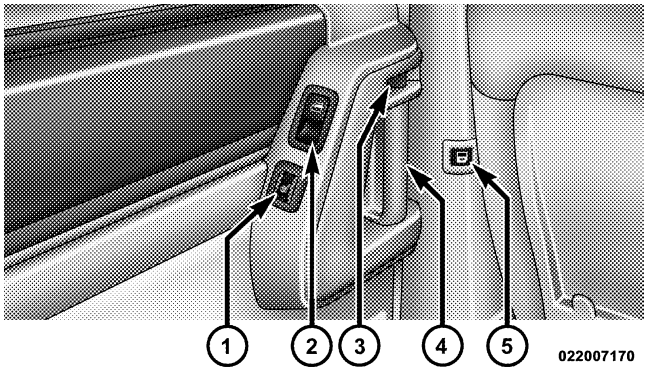

Power Sliding Door

1 — Heated Seat
2 — Power Window
3 — Manual Lock
4 — Door Handle
5 — Power Sliding Door

If the inside or outside door handles are used while the power sliding side door is activated, the power sliding door feature will be canceled.

To avoid unintentional operation of the power sliding doors from the rear seats, press the power sliding door master lock button, located in the overhead console, to disable the switches and handles for the rear seat passengers.

NOTE:

- The power sliding side door switches will not open if the shift lever is in gear or the vehicle speed is above 0 mph (0 km/h). To close the power sliding door with the shift lever in gear and vehicle speed at 0 mph (0 km/h), the brake must be pressed.
- If anything obstructs the power sliding side door while it is closing or opening, the door will automatically reverse to the closed or open position, provided it meets sufficient resistance.
- If the power sliding side door is not in the full open or close position, it will fully open when a power sliding door switch is pressed. To close the door, wait until it is fully open and then press the switch again.
- If the power sliding door encounters multiple obstructions within the same cycle, the system will automatically stop and must be opened or closed manually.

WARNING!

You, or others, could be injured if caught in the path of the sliding door. Make sure the door path is clear before closing the door.

Power Sliding Side Door Open Flash

The left and right exterior hazard lights will flash for 12 seconds when either sliding door is opened. This will alert other drivers in the area that passenger(s) could be entering or exiting the vehicle.

The Sliding Side Door Open Flash can be enabled or disabled by performing the following procedure:

1. Place the Key Fob in the ignition switch.

2. Cycle the ignition switch ON/LOCK five times ending in the ON position **(do not start the engine).**

3. Within 10 seconds of the final cycle, press the HAZARD switch.

4. A single chime will sound to signify that you have successfully completed the programming.

You can turn the feature back on by repeating the previous procedure.

Power Sliding Side Door Master Lock Switch

To provide a safer environment for small children riding in the rear seats, the second row sliding door switches and handles may be overridden by pressing the ON side of the Master Lock Out Switch located in the front overhead console.

When the power sliding door master lock switch is in the ON position, the power sliding side door may not be opened or closed by pressing the switch located on the trim panel just in front of the sliding door or activating the inside power sliding door handle.

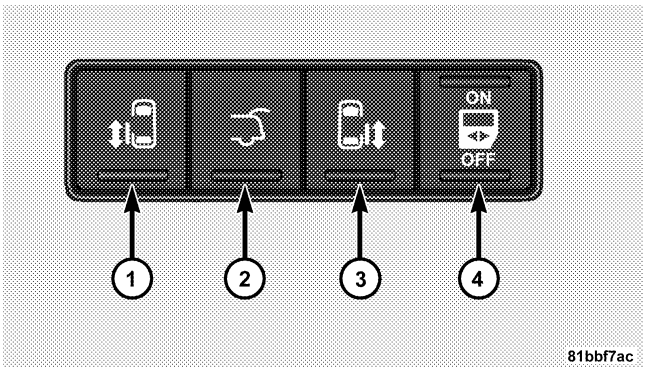

Overhead Console Power Sliding Door Master Switch

1 — Left Door
2 — Liftgate
3 — Right Door
4 — Master Lock

Sliding Side Door Child Protection Lock

To provide a safer environment for small children riding in the rear seats, the sliding doors are equipped with a Child Protection Door Lock system.

NOTE: When the Child Protection Door Lock system is engaged, the door can be opened only by using the outside door handle even though the inside door lock is in the unlocked position.

To Engage the Child Protection Door Lock

1. Open the sliding side door.

2. Slide the Child Protection Door Lock control inward (toward the vehicle) to engage the Child Protection Door Lock.

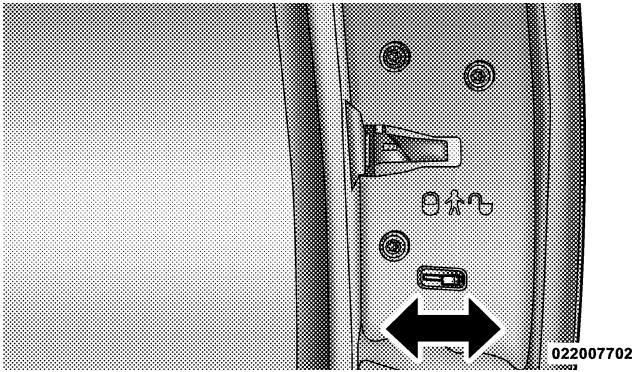

Child Protection Door Lock

3. Repeat Steps 1 and 2 on the opposite sliding door.

NOTE:

- After engaging the Child Protection Door Lock, always test the door from the inside to make certain it is in the desired position.

- When the Child Protection Door Lock system is engaged, (even if the inside door lock is in the unlocked position) the door can be opened only by using the outside door handle, the RKE transmitter, the switches on the overhead console or the switches located on the trim panel just in front of the power sliding door.
- The power sliding side door will operate from the switches located on the trim panel just in front of the power sliding door, regardless of the Child Protection Door Lock lever position. **To avoid unintentional operation of the power sliding door from the rear seats, press the "ON" Master Lock Out Switch located in the front overhead console, next to the driver.**

WARNING!

Avoid trapping anyone in the vehicle in a collision. Remember that the sliding doors can only be opened from the outside door handle or the switches located on the trim panel just in front of the power sliding door when the Child Protection Door Locks are engaged.

To Disengage the Child Protection Door Lock

1. Open the sliding side door.

2. Slide the Child Protection Door Lock control outward (away from the vehicle) to disengage the Child Protection Door Lock.

3. Repeat Steps 1 and 2 on the opposite sliding door (if equipped).

NOTE:

- After setting the Child Protection Door Lock system, always test the door from the inside to make certain it is in the desired position.
- The power sliding side door switches will not open the power sliding doors if the vehicle is in gear or the vehicle speed is above 0 mph (0 km/h).
- The power sliding door will operate from the outside door handle, the RKE transmitter, the switches on the overhead console, or the switches located on the trim panel just in front of the power sliding door when the shift lever is in PARK, regardless of the child lock lever position.

LIFTGATE

On vehicles equipped with power locks, the liftgate can be unlocked using the Remote Keyless Entry (RKE) transmitter button, or by activating the power door lock switches located on the front doors.

To open the liftgate, press the liftgate release handle located on the underside of the license plate bar and pull the liftgate open with one fluid motion.

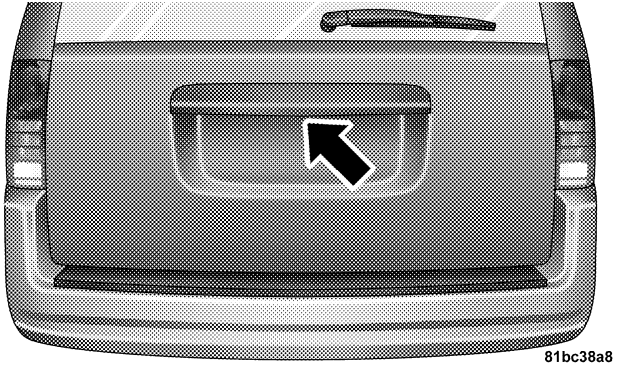

Liftgate Handle Location

If the liftgate is locked and is not equipped with the power liftgate feature, pressing the button on the RKE transmitter will result in the liftgate becoming unlocked for 30 seconds allowing you to manually access the liftgate area.

Power Liftgate — If Equipped

The power liftgate may be opened manually or by using the button on the Remote Keyless Entry (RKE) transmitter. Press the button on the transmitter twice within five seconds, to open the power liftgate. When the liftgate is fully open, pressing the button twice within five seconds, a second time, will close the liftgate.

The power liftgate may also be opened and closed by pressing the button located on the overhead console.

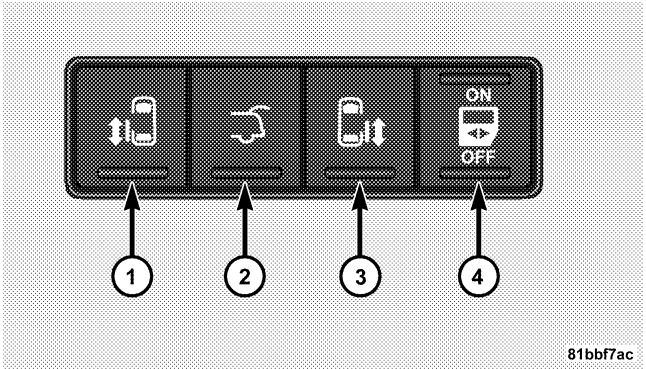

Overhead Console Master Power Switch

1 — Left Door
2 — Liftgate
3 — Right Door
4 — Master Lock

The power liftgate may be closed by pressing the button, located in the upper left trim in the liftgate opening. Pushing once will only close the liftgate. This button cannot be used to open the liftgate.

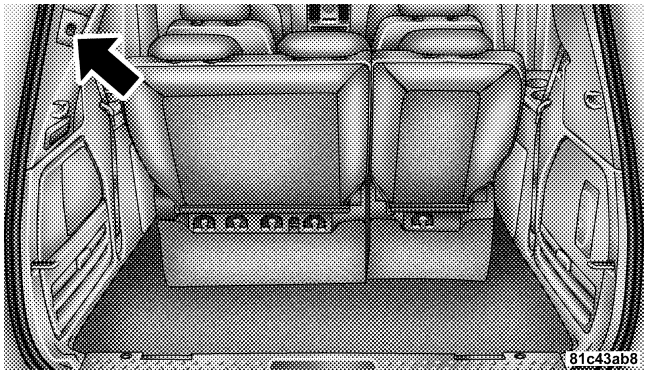

Rear Power Liftgate Switch

When the RKE transmitter button is pressed and the Flash Lights feature is enabled, the tail lights will flash to signal that the liftgate is opening or closing.

WARNING!

During power operation, personal injury or cargo damage may occur. Ensure the liftgate travel path is clear. Make sure the liftgate is closed and latched before driving away.

NOTE:

- If anything obstructs the power liftgate while it is closing or opening, the liftgate will automatically reverse to the closed or open position, provided it meets sufficient resistance.

- There are also pinch sensors attached to the side of the liftgate opening. Light pressure anywhere along these strips will cause the liftgate to return to the open position.
- The power liftgate must be in the full open or close positions for any of the buttons to operate. If the liftgate is not in the full open or close positions, it must be opened or closed manually.
- If the liftgate release button is activated while the power liftgate is closing, the liftgate will reverse to the full open position.
- The power liftgate buttons will not operate if the shift lever is in gear or the vehicle speed is above 0 mph (0 km/h).
- The power liftgate will not operate in temperatures below −12°F (−24°C) or temperatures above 143°F (62°C). Be sure to remove any buildup of snow or ice from the liftgate before pressing any of the power liftgate buttons.
- If the power liftgate encounters multiple obstructions within the same cycle, the system will automatically stop and must be opened or closed manually.

WARNING!

- **Driving with the liftgate open can allow poisonous exhaust gases into your vehicle. You and your passengers could be injured by these fumes. Keep the liftgate closed when you are operating the vehicle.**
- **If you are required to drive with the liftgate open, make sure that all windows are closed, and the climate control blower switch is set at high speed. DO NOT use the recirculation mode.**

Gas props support the liftgate in the open position. However, because the gas pressure drops with temperature, it may be necessary to assist the props when opening the liftgate in cold weather.

OCCUPANT RESTRAINTS

Some of the most important safety features in your vehicle are the restraint systems:

- Three-point lap and shoulder belts for all seating positions
- Advanced Front Airbags for driver and front passenger
- Supplemental Active Head Restraints (AHR) located on top of the front seats (integrated into the head restraint) — if equipped
- Supplemental Side Airbag Inflatable Curtains (SABIC) that span the front, second, and third row seating for the driver and passengers seated next to a window — if equipped
- Supplemental Seat-Mounted Side Airbags (SAB) — if equipped
- An energy-absorbing steering column and steering wheel
- Knee bolsters/blockers for front seat occupants
- Front seat belts incorporate pretensioners to enhance occupant protection by managing occupant energy during an impact event — if equipped

If you will be carrying children too small for adult-sized seat belts, the seat belts or the Lower Anchors and Tether for CHildren (LATCH) feature can be used to hold infant and child restraint systems. For more information on LATCH, see Lower Anchors and Tether for CHildren (LATCH).

NOTE: The Advanced Front Airbags have a multistage inflator design. This allows the airbag to have different rates of inflation based on the severity and type of collision.

Please pay close attention to the information in this section. It tells you how to use your restraint system properly, to keep you and your passengers as safe as possible.

WARNING!

In a collision, you and your passengers can suffer much greater injuries if you are not properly buckled up. You can strike the interior of your vehicle or other passengers, or you can be thrown out of the vehicle. Always be sure you and others in your vehicle are buckled up properly.

Buckle up even though you are an excellent driver, even on short trips. Someone on the road may be a poor driver and cause a collision that includes you. This can happen far away from home or on your own street.

Research has shown that seat belts save lives, and they can reduce the seriousness of injuries in a collision. Some of the worst injuries happen when people are thrown from the vehicle. Seat belts reduce the possibility of ejection and the risk of injury caused by striking the inside of the vehicle. **Everyone in a motor vehicle should be belted at all times.**

Lap/Shoulder Belts

All seats in your vehicle are equipped with lap/shoulder belts.

The belt webbing in the retractor is designed to lock during very sudden stops or collisions. This feature allows the shoulder part of the belt to move freely with

you under normal conditions. However, in a collision the belt will lock and reduce the risk of you striking the inside of the vehicle or being thrown out.

WARNING!

- **It is dangerous to ride in a cargo area, inside or outside of a vehicle. In a collision, people riding in these areas are more likely to be seriously injured or killed.**
- **Do not allow people to ride in any area of your vehicle that is not equipped with seats and seat belts.**
- **Be sure everyone in your vehicle is in a seat and using a seat belt properly.**

(Continued)

WARNING! (Continued)

- **Wearing a seat belt incorrectly is dangerous. Seat belts are designed to go around the large bones of your body. These are the strongest parts of your body and can take the forces of a collision the best.**
- **Wearing your belt in the wrong place could make your injuries in a collision much worse. You might suffer internal injuries, or you could even slide out of part of the belt. Follow these instructions to wear your seat belt safely and to keep your passengers safe, too.**
- **Two people should never be belted into a single seat belt. People belted together can crash into one another in a collision, hurting one another badly. Never use a lap/shoulder belt or lap belt for more than one person, no matter what their size.**

Lap/Shoulder Belt Operating Instructions

1. Enter the vehicle and close the door. Sit back and adjust the seat.

2. The seat belt latch plate is near the seatback of the front seats and next to your arm in the rear seats. Grasp the latch plate and pull out the belt. Slide the latch plate up the webbing as far as necessary to allow the belt to go around your lap.

Pulling Out Belt and Latch Plate

WARNING!

- **A belt that is worn under your arm is dangerous. Your body could strike the inside surfaces of the vehicle in a collision, increasing head and neck injury. A belt worn under the arm can cause internal injuries. Ribs aren't as strong as shoulder bones. Wear the belt over your shoulder so that your strongest bones will take the force in a collision.**
- **A shoulder belt placed behind you will not protect you from injury during a collision. You are more likely to hit your head in a collision if you do not wear your shoulder belt. The lap and shoulder belt are meant to be used together.**

3. When the belt is long enough to fit, insert the latch plate into the buckle until you hear a "click".

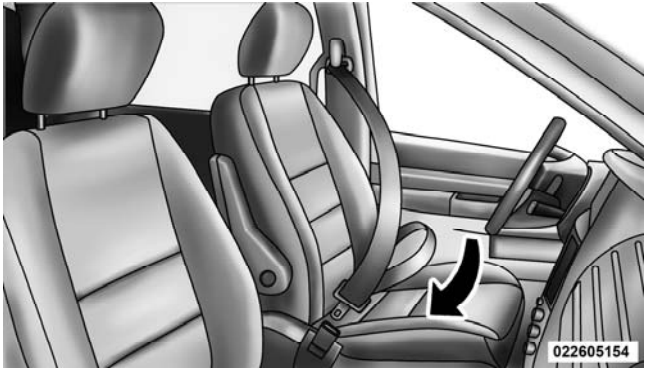

Inserting Latch Plate into Buckle

WARNING!

- **A belt that is buckled into the wrong buckle will not protect you properly. The lap portion could ride too high on your body, possibly causing internal injuries. Always buckle your belt into the buckle nearest you.**
- **A belt that is too loose will not protect you properly. In a sudden stop you could move too far forward, increasing the possibility of injury. Wear your seat belt snugly.**

4. Position the lap belt across your thighs, below your abdomen. To remove slack in the lap belt portion, pull up on the shoulder belt. To loosen the lap belt if it is too tight, tilt the latch plate and pull on the lap belt. A snug belt reduces the risk of sliding under the belt in a collision.

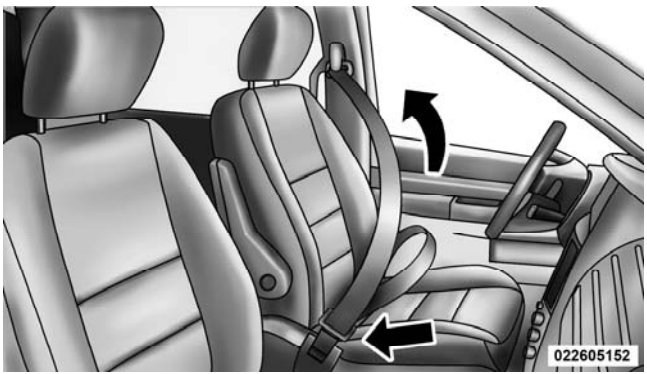

Removing Slack from Belt

WARNING!

• A lap belt worn too high can increase the risk of internal injury in a collision. The belt forces won't be at the strong hip and pelvic bones, but across your abdomen. Always wear the lap belt as low as possible and keep it snug.
• A twisted belt can't do its job properly. In a collision, it could even cut into you. Be sure the belt is straight. If you can't straighten a belt in your vehicle, take it to your authorized dealer immediately and have it fixed.

5. Position the shoulder belt on your chest so that it is comfortable and not resting on your neck. The retractor will withdraw any slack in the belt.

6. To release the belt, push the red button on the buckle. The belt will automatically retract to its stowed position. If necessary, slide the latch plate down the webbing to allow the belt to retract fully.

WARNING!

A frayed or torn belt could rip apart in a collision and leave you with no protection. Inspect the belt system periodically, checking for cuts, frays, or loose parts. Damaged parts must be replaced immediately. Do not disassemble or modify the system. Seat belt assemblies must be replaced after a collision if they have been damaged (bent retractor, torn webbing, etc.).

Third Row Center Shoulder Belt Instructions
The shoulder belt for the third row center seat is located in the headliner slightly behind the third row seat.

Pull the strap down and secure the small latch plate of the lap belt into the small buckle until you hear a “click”.

Position the shoulder belt on your chest so that it is comfortable and not resting on your neck. When the belt is long enough to fit, insert the large latch plate into the buckle until you hear a “click.” The retractor should withdraw any slack in the belt.

To release the small latch plate, position the end of the large latch plate against the red button on the small latch plate and push upward. Reinstall the latch plates into the headliner.

Adjustable Upper Shoulder Belt Anchorage

In the front seats and the second row outboard seats, the shoulder belt anchorage can be adjusted upward or downward to help position the belt away from your neck. The upper anchorage can be adjusted upward by pushing anywhere on the anchorage. To move the anchorage downward, squeeze the actuation buttons while simultaneously pushing down on the anchorage assembly.

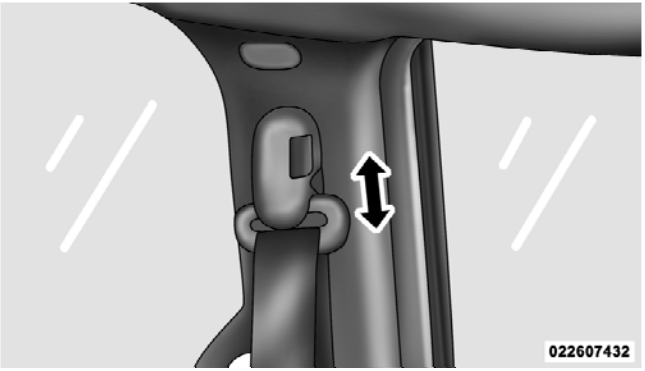

Adjustable Anchorage

As a guide, if you are shorter than average you will prefer a lower position, and if you are taller than average you will prefer a higher position. When you release the anchorage, try to move it up or down to make sure that it is locked in position.

Automatic Locking Retractors (ALR) Mode — If Equipped

In this mode, the shoulder belt is automatically pre-locked. The belt will still retract to remove any slack in the shoulder belt. The Automatic Locking Mode is available on all passenger-seating positions with a combination lap/shoulder belt.

When To Use The Automatic Locking Mode

Use the Automatic Locking Mode anytime a child safety seat is installed in a seating position that has a belt with this feature. Children 12 years old and under should always be properly restrained in the rear seat.

How To Engage The Automatic Locking Mode

1. Buckle the combination lap and shoulder belt.

2. Grasp the shoulder portion and pull downward until the entire belt is extracted.

3. Allow the belt to retract. As the belt retracts, you will hear a clicking sound. This indicates the safety belt is now in the Automatic Locking Mode.

How To Disengage The Automatic Locking Mode

Unbuckle the combination lap/shoulder belt and allow it to retract completely to disengage the Automatic Locking Mode and activate the vehicle sensitive (emergency) locking mode.

Seat Belt Pretensioners — If Equipped

The seat belts for both front seating positions may be equipped with pretensioning devices that are designed to remove slack from the seat belt in the event of a collision. These devices improve the performance of the seat belt by assuring that the belt is tight about the occupant early in a collision. Pretensioners work for all size occupants, including those in child restraints.

NOTE: These devices are not a substitute for proper seat belt placement by the occupant. The seat belt still must be worn snugly and positioned properly.

The pretensioners are triggered by the Occupant Restraint Controller (ORC). Like the airbags, the pretensioners are single use items. A deployed pretensioner or a deployed airbag must be replaced immediately.

Supplemental Active Head Restraints (AHR) — If Equipped

These head restraints are passive, deployable components, and vehicles with this equipment cannot be readily identified by any markings, only through visual inspection of the head restraint. The head restraint will be split in two halves, with the front half being soft foam and trim, the back half being decorative plastic.

How the Active Head Restraints (AHR) Work

The Occupant Restraint Controller (ORC) determines whether the severity, or type of rear impact will require the Active Head Restraints (AHR) to deploy. If a rear impact requires deployment, both the driver and front passenger seat AHRs will be deployed.

When AHRs deploy during a rear impact, the front half of the head restraint extends forward to minimize the gap between the back of the occupant's head and the AHR.

This system is designed to help prevent or reduce the extent of injuries to the driver and front passenger in certain types of rear impacts.

NOTE: The Active Head Restraints (AHR) may or may not deploy in the event of a front or side impact. However if during a front impact, a secondary rear impact occurs, the AHR may deploy based on the severity and type of the impact.

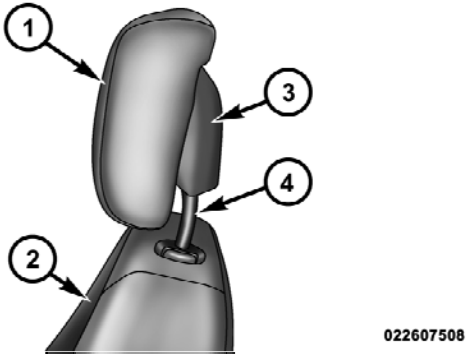

Active Head Restraint (AHR) Components

1 — Head Restraint Front Half (Soft Foam and Trim)	3 — Head Restraint Back Half (Decorative Plastic Rear Cover)
2 — Seatback	4 — Head Restraint Guide Tubes

CAUTION!

All occupants, including the driver, should not operate a vehicle or sit in a vehicle's seat until the head restraints are placed in their proper positions in order to minimize the risk of neck injury in the event of a collision.

NOTE: For more information on properly adjusting and positioning the head restraint, refer to "Adjusting Active Head Restraints" in "Understanding The Features Of Your Vehicle".

Resetting Active Head Restraints (AHR)

If the Active Head Restraints are triggered in a collision, you must reset the head restraint on the driver's and front passenger seat. You can recognize when the Active Head Restraint has been triggered by the fact that they have moved forward (as shown in step three of the resetting procedure).

1. Grasp the deployed AHR from the rear seat.

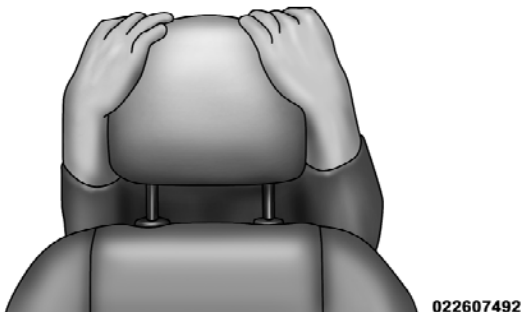

Hand Positioning Points On AHR

2. Position the hands on the top of the deployed AHR at a comfortable position.

3. Pull **down** then **rearward** towards the rear of the vehicle then **down** to engage the locking mechanism.

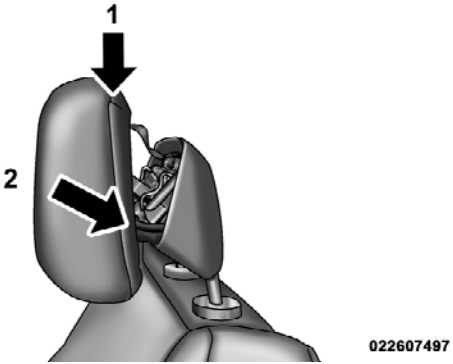

1 — Downward Movement
2 — Rearward Movement

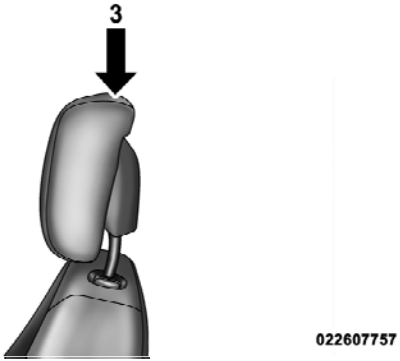

3 — Final Downward Movement To Engage Locking Mechanism

4. The AHR front soft foam and trim half should lock into the back decorative plastic half.

AHR In Reset Position

NOTE:

- If you have difficulties or problems resetting the Active Head Restraints, see an authorized dealer.
- For safety reasons, have the Active Head Restraints checked by a qualified specialist at an authorized dealer.

Enhanced Seat Belt Use Reminder System (BeltAlert®)

If the driver's or front passenger's (if equipped with belt alert) seat belt has not been buckled within 60 seconds of starting the vehicle and if the vehicle speed is greater than 5 mph (8 km/h), the Enhanced Warning System (BeltAlert®) will alert the driver or front passenger to buckle the seat belt. The driver should also instruct all other occupants to buckle their seat belts. Once the warning is triggered, BeltAlert® will continue to chime and flash the Seat Belt Reminder Light for 96 seconds or until the driver's or front passenger's seat belt is buckled. BeltAlert® will be reactivated if the driver's or passenger's seat belt is unbuckled for more than 10 seconds and the vehicle speed is greater than 5 mph (8 km/h).

For front passenger seats equipped with BeltAlert, your vehicle is equipped to detect when it is occupied. The BeltAlert® warning system is not activated when the

front passenger seat is unoccupied. The BeltAlert® warning system may be triggered when an animal or heavy object is on the front passenger seat or when the seat is folded flat (if equipped). It is recommended that pets be restrained in the rear seat in pet harnesses or pet carriers that are secured by seat belts and cargo is properly stowed.

BeltAlert® Programming

BeltAlert® can be enabled or disabled by your authorized dealer or by following these steps:

NOTE: The following steps must occur within the first 60 seconds of the ignition switch being turned to the ON or START position. Chrysler Group LLC does not recommend deactivating BeltAlert®.

1. With all doors closed and the ignition switch in any position except ON or START, buckle the driver's seat belt.

2. Turn the ignition switch to the ON position (do not start the engine), and wait for the Seat Belt Reminder Light to turn off.

3. Within 60 seconds of turning the ignition switch to the ON/RUN position, unbuckle and then re-buckle the driver's seat belt at least three times within 60 seconds, ending with the seat belt buckled.

NOTE: Watch for the Seat Belt Reminder Light to turn on while unbuckling and off while re-buckling the seat belt.

4. Turn the ignition switch to the LOCK position. A single chime will sound to signify that you have successfully completed the programming.

BeltAlert® can be reactivated by repeating this procedure.

NOTE: Although BeltAlert® has been deactivated, the Seat Belt Reminder Light will continue to illuminate while the driver's seat belt remains unbuckled or retracted.

Seat Belts and Pregnant Women

We recommend that pregnant women use the seat belts throughout their pregnancy. Keeping the mother safe is the best way to keep the baby safe.

Pregnant women should wear the lap part of the belt across the thighs and as snug across the hips as possible. Keep the belt low so that it does not come across the abdomen. That way the strong bones of the hips will take the force if there is a collision.

Seat Belt Extender

If a seat belt is too short, even when fully extended and when the adjustable upper shoulder belt anchorage (if equipped) is in its lowest position, your authorized dealer can provide you with a seat belt extender. This extender should be used only if the existing belt is not long enough. When it is not required, remove the extender and store it.

WARNING!

Using a seat belt extender when not needed can increase the risk of injury in a collision. Only use when the seat belt is not long enough when it is worn low and snug, and in the recommended seating positions. Remove and store the extender when not needed.

Supplemental Restraint System (SRS) - Airbags

This vehicle has Advanced Front Airbags for both the driver and front passenger as a supplement to the seat belt restraint systems. The driver's Advanced Front Airbag is mounted in the center of the steering wheel. The passenger's Advanced Front Airbag is mounted in the instrument panel, above the glove compartment. The words SRS AIRBAG are embossed on the airbag covers.

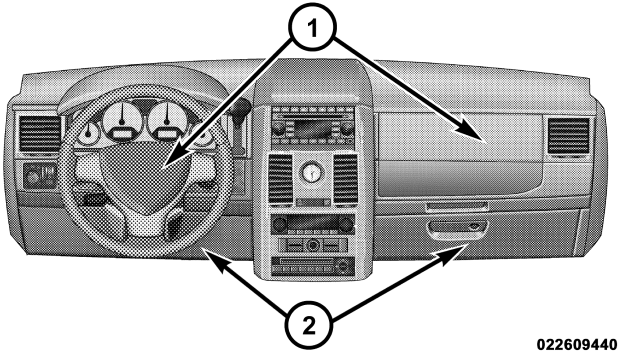

Advanced Front Airbag and Knee Bolster Locations

1 — Driver and Passenger Advanced Front Airbags
2 — Knee Bolsters

NOTE: These airbags are certified to the new Federal regulations for Advanced Airbags.

The Advanced Front Airbags have a multistage inflator design. This allows the airbag to have different rates of inflation based on the severity and type of collision.

This vehicle may be equipped with driver and/or front passenger seat track position sensors that may adjust the inflation rate of the Advanced Front Airbags based upon seat position.

This vehicle may be equipped with a driver and/or front passenger seat belt buckle switch that detects whether the driver or front passenger seat belt is fastened. The seat belt buckle switch may adjust the inflation rate of the Advanced Front Airbags.

This vehicle may also be equipped with Supplemental Side Airbag Inflatable Curtains (SABIC) to protect the driver, front, and rear passengers sitting next to a window. If the vehicle is equipped with SABIC airbags, they are located above the side windows and their covers are also labeled: SRS AIRBAG.

NOTE:

- Airbag covers may not be obvious in the interior trim; but they will open during airbag deployment.
- After any collision, the vehicle should be taken to an authorized dealer immediately.

Airbag System Components

Your vehicle may be equipped with the following airbag system components:

- Occupant Restraint Controller (ORC)
- Airbag Warning Light
- Steering Wheel and Column
- Instrument Panel
- Knee Impact Bolster
- Driver Advanced Front Airbag
- Passenger Advanced Front Airbag

- Supplemental Seat-Mounted Side Airbags (SAB)
- Supplemental Side Airbag Inflatable Curtains (SABIC)
- Front and Side Impact Sensors
- Front Seat Belt Pretensioners, Seat Belt Buckle Switch, and Seat Track Position Sensors
- Supplemental Active Head Restraint for Driver and Front Passenger

Advanced Front Airbag Features

The Advanced Front Airbag system has multistage driver and front passenger airbags. This system provides output appropriate to the severity and type of collision as determined by the Occupant Restraint Controller (ORC), which may receive information from the front impact sensors.

The first stage inflator is triggered immediately during an impact that requires airbag deployment. The timing of the second stage determines whether the output force is low, medium, or high. If a low output is sufficient to meet the need, the remaining gas in the inflator is expended.

WARNING!

- **No objects should be placed over or near the airbag on the instrument panel, because any such objects could cause harm if the vehicle is in a collision severe enough to cause the airbag to inflate.**
- **Do not put anything on or around the airbag covers or attempt to open them manually. You may damage the airbags and you could be injured because the airbags may no longer be functional. The protective covers for the airbag cushions are designed to open only when the airbags are inflating.**

(Continued)

WARNING! (Continued)

- **Do not drill, cut or tamper with the knee bolster in any way.**
- **Do not mount any accessories to the knee bolster such as alarm lights, stereos, citizen band radios, etc.**

Supplemental Seat-Mounted Side Airbags (SAB) — If Equipped

Supplemental Seat-Mounted Side Airbags provide enhanced protection to help protect an occupant during a side impact. The Supplemental Seat-Mounted Side Airbag is marked with an airbag label sewn into the outboard side of the front seats.

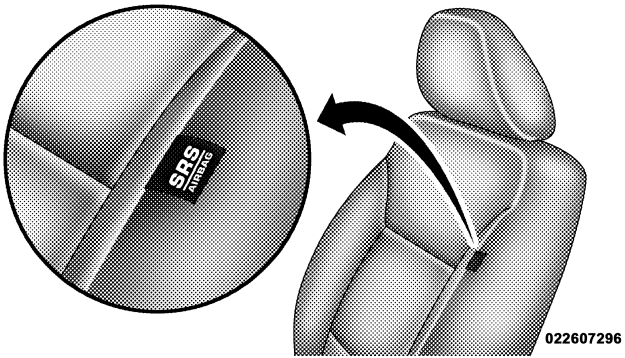

Supplemental Seat-Mounted Side Airbag Label

When the airbag deploys, it opens the seam between the front and side of the seat's trim cover. Each airbag deploys independently, that is a left side impact deploys the left airbag only and a right-side impact deploys only the right airbag.

Supplemental Side Airbag Inflatable Curtain (SABIC) — If Equipped

SABIC airbags may offer side-impact and vehicle rollover protection to front and rear seat outboard occupants in addition to that provided by the body structure. Each airbag features inflated chambers placed adjacent to the head of each outboard occupant that reduce the potential for side-impact head injuries. The curtains deploy downward, covering both windows on the impact side.

NOTE:

- Should a vehicle rollover occur, the pretensioners and/or SABIC airbags on both sides of the vehicle may deploy.
- Airbag covers may not be obvious in the interior trim; but they will open during airbag deployment.

The system includes side impact sensors adjacent to both front and rear seat occupants that are calibrated to deploy the SABIC airbags during impacts that require airbag occupant protection.

WARNING!

- **If your vehicle is equipped with left and right Supplemental Side Airbag Inflatable Curtain (SABIC), do not stack luggage or other cargo up high enough to block the location of the SABIC. The area where the SABIC is located should remain free from any obstructions.**
- **Do not use accessory seat covers or place objects between you and the side airbags; the performance could be adversely affected and/or objects could be pushed into you, causing serious injury.**

Knee Impact Bolsters

The Knee Impact Bolsters help protect the knees of the driver and the front passenger, and position front occupants for the best interaction with the Advanced Front Airbags.

Along with seat belts and pretensioners, Advanced Front Airbags work with the knee bolsters to provide improved protection for the driver and front passenger. Side airbags also work with seat belts to improve occupant protection.

Here are some simple steps you can take to minimize the risk of harm from a deploying airbag:

Children 12 years old and under should always ride buckled up in a rear seat.

WARNING!

Infants in rear-facing child restraints should NEVER ride in the front seat of a vehicle with a passenger Advanced Front Airbag. An airbag deployment can cause severe injury or death to infants in that position.

Children that are not big enough to wear the vehicle seat belt properly (see Section on Child Restraints) should be secured in the rear seat in child restraints or belt-positioning booster seats. Older children who do not use child restraints or belt-positioning booster seats should ride properly buckled up in the rear seat. Never allow children to slide the shoulder belt behind them or under their arm.

If a child from 1 to 12 years old (not in a rear facing child seat) must ride in the front passenger seat, move the seat as far back as possible and use the proper child restraint. (Refer to "Child Restraints")

You should read the instructions provided with your child restraint to make sure that you are using it properly.

All occupants should ALWAYS wear their lap and shoulder belts properly.

The driver and front passenger seats should be moved back as far as practical to allow the Advanced Front Airbags room to inflate.

Do not lean against the door or window. If your vehicle has side airbags, and deployment occurs, the side airbags will inflate forcefully into the space between you and the door.

If the airbag system in this vehicle needs to be modified to accommodate a disabled person, contact the Customer Center. Phone numbers are provided under "If You Need Assistance" in this manual.

WARNING!

- **Relying on the airbags alone could lead to more severe injuries in a collision. The airbags work with your seat belt to restrain you properly. In some collisions, the airbags won't deploy at all. Always wear your seat belts even though you have airbags.**

(Continued)

WARNING! (Continued)

- **Being too close to the steering wheel or instrument panel during Advanced Front Airbag deployment could cause serious injury, including death. Airbags need room to inflate. Sit back, comfortably extending your arms to reach the steering wheel or instrument panel.**
- **Side airbags also need room to inflate. Do not lean against the door or window. Sit upright in the center of the seat.**

Airbag Deployment Sensors and Controls

Occupant Restraint Controller (ORC)

The **ORC** is part of a Federally regulated safety system required for this vehicle.

The ORC determines if deployment of the front and/or side airbags in a frontal or side collision is required. Based on the impact sensors signals, a central electronic ORC deploys the Advanced Front Airbags, SABIC airbags — if equipped, Supplemental Seat-Mounted Side Airbags — if equipped, and front seat belt pretensioners — if equipped, as required, depending on the severity and type of impact.

Advanced Front Airbags are designed to provide additional protection by supplementing the seat belts in certain frontal collisions depending on the severity and type of collision. Advanced Front Airbags are not expected to reduce the risk of injury in rear, side, or rollover collisions.

The Advanced Front Airbags will not deploy in all frontal collisions, including some that may produce substantial vehicle damage — for example, some pole collisions, truck underrides, and angle offset collisions. On the other hand, depending on the type and location of impact,

Advanced Front Airbags may deploy in crashes with little vehicle front-end damage but that produce a severe initial deceleration.

The side airbags will not deploy in all side collisions. Side airbag deployment will depend on the severity and type of collision.

Because airbag sensors measure vehicle deceleration over time, vehicle speed and damage by themselves are not good indicators of whether or not an airbag should have deployed.

Seat belts are necessary for your protection in all collisions, and also are needed to help keep you in position, away from an inflating airbag.

The ORC monitors the readiness of the electronic parts of the airbag system whenever the ignition switch is in the START or ON position. If the key is in the LOCK position, in the ACC position, or not in the ignition, the airbag system is not on and the airbags will not inflate.

The ORC contains a backup power supply system that may deploy the airbags even if the battery loses power or it becomes disconnected prior to deployment.

Also, the ORC turns on the Airbag Warning Light in the instrument panel for approximately four to eight seconds for a self-check when the ignition is first turned on. After the self-check, the Airbag Warning Light will turn off. If the ORC detects a malfunction in any part of the system, it turns on the Airbag Warning Light, either momentarily or continuously. A single chime will sound if the light comes on again after initial startup.

It also includes diagnostics that will illuminate the instrument cluster Airbag Warning Light if a malfunction is noted that could affect the airbag system. The diagnostics also record the nature of the malfunction.

WARNING!

Ignoring the Airbag Warning Light in your instrument panel could mean you won't have the airbags to protect you in a collision. If the light does not come on, stays on after you start the vehicle, or if it comes on as you drive, have an authorized dealer service the airbag system immediately.

Driver and Passenger Airbag Inflator Units

The Driver and Passenger Airbag Inflator Units are located in the center of the steering wheel and the right side of the instrument panel. When the ORC detects a collision requiring the Advanced Front Airbags, it signals the inflator units. A large quantity of non-toxic gas is generated to inflate the Advanced Front Airbags. Different airbag inflation rates are possible, based on the collision type and severity. The steering wheel hub trim cover and the upper right side of the instrument panel separate and fold out of the way as the airbags inflate to their full size. The airbags fully inflate in about 50 to 70 milliseconds. This is about half of the time it takes to blink your eyes. The airbags then quickly deflate while helping to restrain the driver and front passenger.

The Advanced Front Airbag gas is vented through the vent holes in the sides of the airbag. In this way, the airbags do not interfere with your control of the vehicle.

Supplemental Seat-Mounted Side Airbag Inflator Units — If Equipped

The Side Impact (SRS) Seat-Mounted Side Airbags are designed to activate only in certain side collisions.

The ORC determines if a side collision requires the side airbags to inflate based on the severity and type of collision.

Based on the severity and type of collision, the side airbag inflator on the crash side of the vehicle may be

triggered, releasing a quantity of non-toxic gas. The inflating side airbag exits through the seat seam into the space between the occupant and the door. The side airbags fully inflate in about 10 milliseconds. The side airbag moves at a very high speed and with such a high force, that it could injure you if you are not seated properly, or if items are positioned in the area where the side airbag inflates. This especially applies to children.

Supplemental Side Airbag Inflatable Curtain (SABIC) Inflator Units — If Equipped

During collisions where the impact is confined to a particular area of the side of the vehicle, the ORC may deploy the SABIC airbags, depending on the severity and type of collision. In these events, the ORC will deploy the SABIC only on the impact side of the vehicle.

A quantity of non-toxic gas is generated to inflate the side curtain airbag. The inflating side curtain airbag pushes the outside edge of the headliner out of the way and covers the window. The airbag inflates in about 30 ms (about one-quarter of the time that it takes to blink your eyes) with enough force to injure you if you are not belted and seated properly, or if items are positioned in the area where the side curtain airbag inflates. This especially applies to children. The side curtain airbag is only about 3-1/2 in (9 cm) thick when it is inflated.

Because airbag sensors estimate deceleration over time, vehicle speed and damage are not good indicators of whether or not an airbag should have deployed.

NOTE: In a rollover the pretensioners and/or SABIC airbags may deploy on both sides of the vehicle.

Front and Side Impact Sensors

In front and side impacts, impact sensors can aid the ORC in determining appropriate response to impact events. Additional sensors in the ORC determine the level of airbag deployment and provide verification.

Enhanced Accident Response System

In the event of an impact causing airbag deployment, if the communication network remains intact, and the power remains intact, depending on the nature of the event the ORC will determine whether to have the Enhanced Accident Response System perform the following functions:

- Cut off fuel to the engine.
- Flash hazard lights as long as the battery has power or until the ignition key is turned off.
- Turn on the interior lights, which remain on as long as the battery has power or until the ignition key is removed.
- Unlock the doors automatically.

If a Deployment Occurs

The front airbags are designed to deflate immediately after deployment.

NOTE: Front and/or side airbags will not deploy in all collisions. This does not mean something is wrong with the airbag system.

If you do have a collision which deploys the airbags, any or all of the following may occur:

- The nylon airbag material may sometimes cause abrasions and/or skin reddening to the driver and front passenger as the airbags deploy and unfold. The abrasions are similar to friction rope burns or those you might get sliding along a carpet or gymnasium floor. They are not caused by contact with chemicals. They are not permanent and normally heal quickly. However, if you haven't healed significantly within a few days, or if you have any blistering, see your doctor immediately.
- As the airbags deflate, you may see some smoke-like particles. The particles are a normal by-product of the process that generates the non-toxic gas used for

airbag inflation. These airborne particles may irritate the skin, eyes, nose, or throat. If you have skin or eye irritation, rinse the area with cool water. For nose or throat irritation, move to fresh air. If the irritation continues, see your doctor. If these particles settle on your clothing, follow the garment manufacturer's instructions for cleaning.

Do not drive your vehicle after the airbags have deployed. If you are involved in another collision, the airbags will not be in place to protect you.

WARNING!

Deployed airbags and seat belt pretensioners cannot protect you in another collision. Have the airbags, seat belt pretensioners, and the front passenger seat belt retractor assembly replaced by an authorized dealer as soon as possible. Also, have the Occupant Restraint Controller (ORC) system serviced as well.

Maintaining Your Airbag System

WARNING!

- **Modifications to any part of the airbag system could cause it to fail when you need it. You could be injured if the airbag system is not there to protect you. Do not modify the components or wiring, including adding any kind of badges or stickers to the steering wheel hub trim cover or the upper right side of the instrument panel. Do not modify the front bumper, vehicle body structure, or add aftermarket side steps or running boards.**
- **It is dangerous to try to repair any part of the airbag system yourself. Be sure to tell anyone who works on your vehicle that it has an airbag system.**

(Continued)

WARNING! (Continued)

- **Do not attempt to modify any part of your advanced airbag system. The airbag may inflate accidentally or may not function properly if modifications are made. Take your vehicle to an authorized dealer for any advanced airbag system service. If your seat, including your trim cover and cushion, needs to be serviced in any way (including removal or loosening/tightening of seat attachment bolts), take the vehicle to your authorized dealer. Only manufacturer approved seat accessories may be used. If it is necessary to modify the airbag system for persons with disabilities, contact your authorized dealer.**

Airbag Warning Light

You will want to have the airbags ready to inflate for your protection in a collision. The Airbag Warning Light monitors the internal circuits and interconnecting wiring associated with airbag system electrical components. While the airbag system is designed to be maintenance free, if any of the following occurs, have an authorized dealer service the airbag system immediately.

- The Airbag Warning Light does not come on during the four to eight seconds when the ignition switch is first turned to the ON position.
- The Airbag Warning Light remains on after the four to eight-second interval.
- The Airbag Warning Light comes on intermittently or remains on while driving.

NOTE: If the speedometer, tachometer, or any engine related gauges are not working, the Occupant Restraint Controller (ORC) may also be disabled. The airbags may not be ready to inflate for your protection. Promptly check the fuse block for blown fuses. Refer to the label located on the inside of the fuse block cover for the proper airbag fuses. See your authorized dealer if the fuse is good.

Event Data Recorder (EDR)

In the event of a collision, your vehicle is designed to record up to five seconds of specific vehicle data parameters (see list below) in an event data recorder prior to the moment of airbag deployment, or near deployment (if applicable), and up to a quarter second of either high-speed deceleration data or change in velocity during and/or after airbag deployment or near-deployment. EDR data is ONLY recorded if an airbag deploys, or nearly deploys, and is otherwise unavailable.

NOTE:

1. A near-deployment event occurs when the airbag sensor detects severe vehicle deceleration usually indicative of a crash, but not severe enough to warrant airbag deployment.

2. Under certain circumstances, EDR data may not be recorded (e.g., loss of battery power).

In conjunction with other data gathered during a complete accident investigation, the electronic data may be used by Chrysler Group LLC and others to learn more about the possible causes of crashes and associated injuries in order to assess and improve vehicle performance. In addition to crash investigations initiated by Chrysler Group LLC, such investigations may be requested by customers, insurance carriers, government officials, and professional crash researchers, such as those associated with universities, and with hospital and insurance organizations.

In the event that an investigation is undertaken by Chrysler Group LLC (regardless of initiative), the company or its designated representative will first obtain permission of the appropriate custodial entity for the vehicle (usually the vehicle owner or lessee) before accessing the electronic data stored, unless ordered to image the data by a court with legal jurisdiction (i.e., pursuant to a warrant). A copy of the data will be provided to the custodial entity upon request. General data that does not identify particular vehicles or crashes may be released for incorporation in aggregate crash databases, such as those maintained by the U.S. government and various states. Data of a potentially sensitive nature, such as would identify a particular driver, vehicle, or crash, will be treated confidentially. Confidential data will not be disclosed by Chrysler Group LLC to any third party except when:

1. Used for research purposes, such as to match data with a particular crash record in an aggregate database, provided confidentiality of personal data is thereafter preserved.

2. Used in defense of litigation involving a Chrysler Group LLC product.

3. Requested by police under a legal warrant.

4. Otherwise required by law.

Data parameters that are recorded:

- Diagnostic trouble code(s) and warning light status for electronically-controlled safety systems, including the airbag system
- Vehicle speed
- Engine RPM
- Brake switch status

- Pedal position
- And other parameters depending on vehicle configuration

Integrated Child Booster Seat — If Equipped

The Integrated Child Booster Seat (if equipped) is located in each second-row passenger seat. The booster seat is designed for children weighing between 48 and 85 lbs (22 and 39 kg) and between 47 in (119 cm) and 57 in (145 cm) tall.

The booster seat is designed to raise the child high enough to use the vehicle lap and shoulder belt. The booster seat latch release handle is located at the front of the seat cushion.

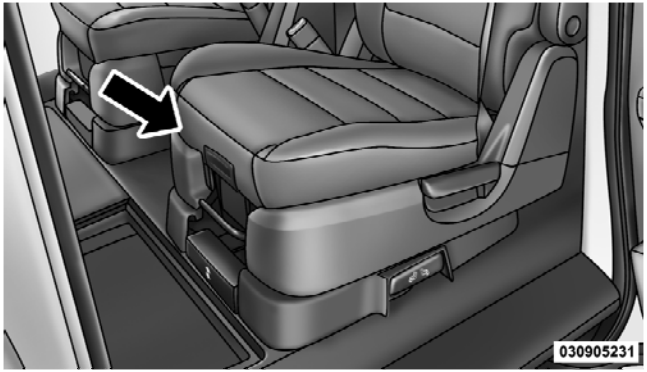

Booster Seat Release Handle

To position a child into the Integrated Child Booster Seat follow these steps:

1. Pull the release handle forward to release the latch and seat cushion. Then, lift seat cushion up and push back to lock it in the booster seat position.

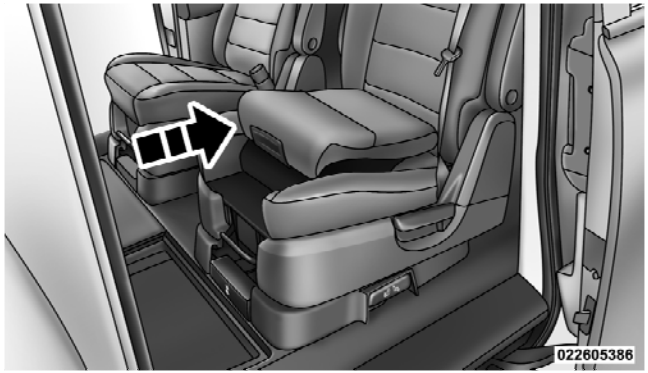

Booster Seat Position

WARNING!

Failure to comply with the following conditions could result in serious injury or death:

(Continued)

WARNING! (Continued)

- **The swivel seat should be locked in the forward-facing position when using the booster seat with the vehicle in motion.**
- **Be certain that the seat cushion is locked securely into position before using the seat. Otherwise, the seat will not provide the proper stability for child seats and/or passengers. An improperly latched seat cushion could cause serious injury.**

2. Place the child upright in the seat with their back firmly against the seatback.

3. Grasp the latch plate and pull out the seat belt.

4. Slide the latch plate up the webbing as far as necessary to allow the seat belt to go around the child's lap.

NOTE: The lap portion of the seat belt should be low on the hips and as snug as possible.

5. Once the seat belt is long enough to fit properly, insert the latch plate into the buckle until you hear a “click.”

6. To remove the slack from the lap belt, pull upward on the shoulder portion of the seat belt.

Integrated Child Booster Seat

7. To release the seat belt, push the red button on the buckle.

Integrated Child Seat — If Equipped

Operating instructions for the second row bench seat with Integrated Child Seat are included with the seat. If the instructions are not with the seat or in the Owner’s Manual Package, replacement instruction can be obtained.

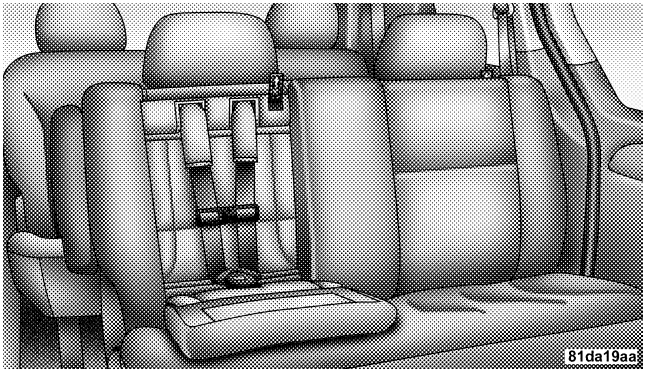

Second Row Bench Seat With Integrated Child Seat

To obtain Integrated Child Seat replacement instructions: Refer to "Publication Order Forms" in "If You Need Consumer Assistance" and specify publication number 81–016–8050 when ordering.

Child Restraints

Everyone in your vehicle needs to be buckled up all the time, including babies and children. Every state in the United States and all Canadian provinces require that small children ride in proper restraint systems. This is the law, and you can be prosecuted for ignoring it.

Children 12 years and younger should ride properly buckled up in a rear seat. According to crash statistics, children are safer when properly restrained in the rear seats rather than in the front.

WARNING!

In a collision, an unrestrained child, even a tiny baby, can become a projectile inside the vehicle. The force required to hold even an infant on your lap could become so great that you could not hold the child, no matter how strong you are. The child and others could be badly injured. Any child riding in your vehicle should be in a proper restraint for the child's size.

Infants and Small Children

There are different sizes and types of restraints for children from newborn size to the child almost large enough for an adult safety belt. Always check the child seat Owner's Manual to ensure you have the right seat for your child. Use the restraint that is correct for your child.

- Safety experts recommend that children ride rearward-facing in the vehicle until they are at least one year old and weigh at least 20 lbs (9 kg). Two types of child restraints can be used rearward-facing: infant carriers and convertible child seats. Both types of child restraints are held in the vehicle by the lap/shoulder belt or the LATCH child restraint anchorage system. Refer to "Lower Anchors and Tether for CHildren (LATCH)".

- The infant carrier is only used rearward-facing in the vehicle. It is recommended for children who weigh up to about 20 lbs (9 kg). Convertible child seats can be used either rearward-facing or forward-facing in the vehicle. Convertible child seats often have a higher weight limit in the rearward-facing direction than infant carriers do, so they can be used rearward-facing by children who weigh more than 20 lbs (9 kg) but are less than one year old.

WARNING!

Rearward-facing child seats must NEVER be used in the front seat of a vehicle with a front passenger airbag. An airbag deployment could cause severe injury or death to infants in this position.

- Rearward-facing child seats and infant carriers must **NEVER** be used while the second row Swivel 'n Go seats are in the rearward-facing position.

WARNING!

Never place any child seat, booster seat, or infant carrier in the Swivel 'n Go seat while it is in the rearward-facing position. The swivel seat should be locked in the forward position when using any child seat, booster seat, or infant carriers, with the vehicle in motion. Failure to do so could result in serious injury or even death.

Older Children and Child Restraints

Children who weigh more than 20 lbs (9 kg) and who are older than one year can ride forward-facing in the vehicle. Forward-facing child seats and convertible child seats used in the forward-facing direction are for children who weigh 20 to 40 lbs (9 to 18 kg) and who are older than one year. These child seats are also held in the vehicle by the lap/shoulder belt or the LATCH child restraint anchorage system. Refer to "Lower Anchors and Tether for CHildren (LATCH)".

An aftermarket belt-positioning booster seat is for children weighing more than 40 lbs (18 kg), but who are still too small to properly fit the vehicle's seat belts. If the child can not sit with knees bent over the vehicles seat cushion while the child's back is against the seatback, they should use a belt-positioning booster seat. The child and booster seat are held in the vehicle by the lap/shoulder belt.

Children Too Large for Booster Seats

Children who are large enough to wear the shoulder belt comfortably, and whose legs are long enough to bend over the front of the seat when their back is against the seatback, should use the lap/shoulder belt in a rear seat.

- Make sure that the child is upright in the seat.

- The lap portion should be low on the hips and as snug as possible.
- Check belt fit periodically. A child's squirming or slouching can move the belt out of position.
- If the shoulder belt contacts the face or neck, move the child closer to the center of the vehicle. If this doesn't help, move the child to the center rear seating position and use both the lap and shoulder belt. Never allow a child to put the shoulder belt under an arm or behind their back.

NOTE: For additional information, refer to www.seatcheck.org or call 1–866–SEATCHECK. Canadian residents, should refer to Transport Canada's website for additional information. http://www.tc.gc.ca/roadsafety/safedrivers/childsafety/index.htm

WARNING!

- **Improper installation can lead to failure of an infant or child restraint. It could come loose in a collision. The child could be badly injured or killed. Follow the manufacturer's directions exactly when installing an infant or child restraint.**
- **A rearward-facing child restraint should only be used in a rear seat. A rearward-facing child restraint in the front seat may be struck by a deploying passenger airbag which may cause severe or fatal injury to the infant.**
- **Occupants riding in Swivel 'n Go seating must be wearing their seat belt and the seat must be locked in either the forward or rearward position. Failure to do so could result in serious injury or even death.**

Here are some tips on getting the most out of your child restraint:

- Before buying any restraint system, make sure that it has a label certifying that it meets all applicable Safety Standards. Chrysler Group LLC also recommends that you make sure that you can install the child restraint in the vehicle where you will use it, before you buy it.
- The restraint must be appropriate for your child's weight and height. Check the label on the restraint for weight and height limits.
- Carefully follow the instructions that come with the restraint. If you install the restraint improperly, it may not work when you need it.
- The passenger seat belts are equipped with cinching latch plates, which are designed to keep the lap portion tight around the child restraint so that it is not necessary to use a locking clip. Pulling up on the shoulder portion of the lap/shoulder belt will tighten the belt. The cinching latch plate will keep the belt tight; however, any seat belt system will loosen with time, so check the belt occasionally and pull it tight if necessary.
- In the rear seat, you may have trouble tightening the lap/shoulder belt on the child restraint because the buckle or latch plate is too close to the belt path opening on the restraint. Disconnect the latch plate from the buckle and twist the short buckle end of the belt several times to shorten it. Insert the latch plate into the buckle with the release button facing out.
- If the belt still can't be tightened, or if pulling and pushing on the restraint loosens the belt, disconnect the latch plate from the buckle, turn the buckle around, and insert the latch plate into the buckle again. If you still can't make the child restraint secure, try a different seating position.

- Buckle the child into the seat according to the child restraint manufacturer's directions.
- When your child restraint is not in use, secure it in the vehicle with the seat belt or remove it from the vehicle. Don't leave it loose in the vehicle. In a sudden stop or collision, it could strike the occupants or seatbacks and cause serious personal injury.

Installing the Child Restraint System

We urge you to carefully follow the directions of the manufacturer when installing your child restraint. Many, but not all restraint systems will be equipped with separate straps on each side, with each having a hook or connector, and a means for adjusting the tension in the strap. Forward-facing toddler restraints and some rearward-facing infant restraints will also be equipped with a tether strap, a hook and means for adjusting the tension in the strap. Not all child restraint systems will be installed as described here. Again, carefully follow the installation instructions that are provided with the child restraint system.

In general, you will first loosen the adjusters on the lower straps and tether straps so that you can more easily attach the hook or connector to the lower anchorages and tether anchorages. Then tighten all three straps as you push the child restraint rearward and downward into the seat.

Not all child restraint systems will be installed as we have described here. Again, carefully follow the instructions that come with the child restraint system.

WARNING!

Improper installation of a child restraint to the LATCH anchorages can lead to failure of an infant or child restraint. The child could be badly injured or killed. Follow the manufacturer's directions exactly when installing an infant or child restraint.

Installing the LATCH-Compatible Child Restraint System

Each vehicle, except commercial cargo vehicles, is equipped with the child restraint anchorage system called LATCH, which stands for Lower Anchors and Tether for CHildren. Two LATCH child restraint anchorage systems are installed on all second-row seats and in the center position on all third row fold-in-floor seats. Second-row seats also feature tether strap anchorages, located in the rear surface of the seatback. In addition, all third row fold-in-floor seats are equipped with a child restraint tether anchor at the center seating position.

NOTE:

- When using the LATCH attaching system to install a child restraint, please ensure that all seat belts not being used for occupant restraints are stowed and out of reach of children. It is recommended that before installing the child restraint, buckle the seat belt so the seat belt is tucked behind the child restraint and out of reach. If the buckled seat belt interferes with the child restraint installation, instead of tucking the seat belt behind the child restraint, route the seat belt through the child restraint belt path and then buckle it. This should stow the seat belt out of the reach of an inquisitive child. Remind all children in the vehicle that the seat belts are not toys and should not be played with, and never leave your child unattended in the vehicle.

- If your child restraint seat is not LATCH-compatible, install the restraint using the vehicle seat belts.

Installing the Lower Attachments:

1. The vehicle lower anchorages are round bars located at the rear of the seat cushion where it meets the seatback.

2. Loosen the adjusters on the lower child restraint attachment straps (reference the child restraint seat instructions) to ease the installation.

NOTE: It is recommended to loosen the top tether strap and route it loosely prior to securing the lower anchors so the top tether strap is not trapped between the vehicle seat and child restraint.

3. Attach the lower child restraint attachment straps to the vehicle's lower anchor bars. Ensure that the lower attachment strap is firmly engaged and that the hook is secure.

4. Tighten the lower attachment strap while firmly pushing the child restraint rearward and downward into the vehicle seat. Remove all slack in the lower attachment straps. Reference the child restraint instructions for information on properly removing slack.

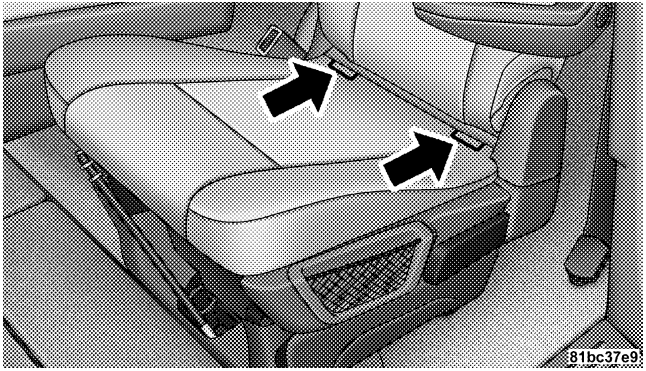

LATCH Anchorages

Installing the Top Tether Strap (with either Lower Anchors or Vehicle Seat Belt):

1. Route the top tether strap under the adjustable head restraint between the steel posts.

2. Provide enough slack (reference child restraint instructions) for the tether strap to reach the tether anchor located near the bottom of the seat back.

3. Clip tether hook to tether anchor. Ensure that the hook is firmly engaged and secure.

4. Remove all slack and tighten tether strap according to child restraint manufacturer's instructions.

NOTE: The top tether strap is always to be secured, regardless of if the child restraint is installed with the lower anchors or the vehicle seat belt.

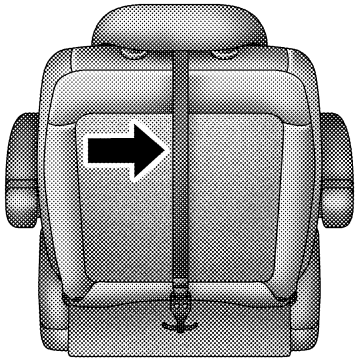

Rear Seat Tether Strap Mounting

WARNING!

An incorrectly anchored tether strap could lead to increased head motion and possible injury to the child. Use only the anchor positions directly behind the child seat to secure a child restraint top tether strap.

Installing the Child Restraint Using the Vehicle Seat Belts

The seat belts in the passenger seating positions are equipped with either an Automatic Locking Retractor (ALR) or a cinching latch plate or both. Both types of seat belts are designed to keep the lap portion of the seat belt tight around the child restraint so that it is not necessary to use a locking clip. The ALR will make a ratcheting noise if you extract the entire belt from the retractor and then allow the belt to retract into the retractor. For additional information on ALR, refer to "Automatic Locking Mode".

To install a child restraint, first, pull enough of the seat belt webbing from the retractor to route it through the belt path of the child restraint and slide the latch plate into the buckle. Next, extract all the seat belt webbing out of the retractor and then allow the belt to retract into the retractor. Finally, pull on any excess webbing to tighten the lap portion around the child restraint. Any seat belt system will loosen with time, so check the belt occasionally, and pull it tight if necessary.

Once you have completed securing the child restraint with the seat belt secure the top tether strap. Refer to "Installing the Top Tether Strap" for instructions.

Transporting Pets

Airbags deploying in the front seat could harm your pet. An unrestrained pet could be thrown about and possibly injured, or injure a passenger during panic braking or in a collision.

Pets should be restrained in the rear seat in pet harnesses or pet carriers that are secured by seat belts.

REAR SEAT DELETE FEATURE (COMMERCIAL VEHICLES ONLY) — IF EQUIPPED

Commercial cargo vehicles are not designed for use as a family vehicle and are not intended for carrying children in the front passenger seat. However, if you must carry a child in a vehicle without a rear seat, the passenger seat should be moved to the full rearward position and the child must be in a proper restraint system based on its age, size and weight.

WARNING!

NEVER carry a child in a rear facing infant carrier in a vehicle without rear seats. In an accident, serious injury or death may occur from the deploying passenger airbag.

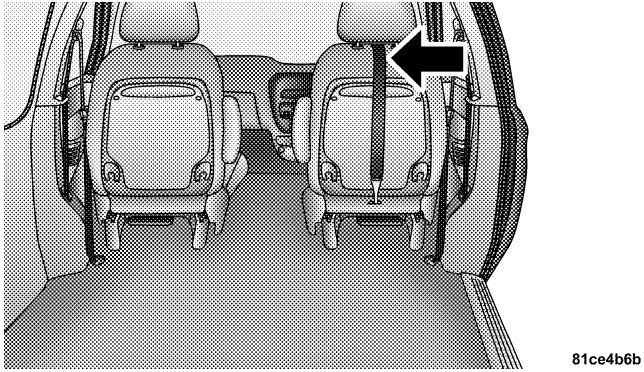

Commercial Child Restraint Tether Anchor

This vehicle is equipped with a child restraint tether anchor located on the lower rear of the front passenger seat. **Use this tether anchor to secure only forward-facing child restraints equipped with an upper tether strap.**

WARNING!

Rearward-facing infant restraints must never be secured in the passenger seat of a vehicle with a passenger airbag. In an accident, a passenger airbag may deploy causing severe injury or death to infants riding in rearward-facing infant restraints.

Restraining Infants and Small Children with Seat Delete Feature (Commercial Vehicles Only)

There are different sizes and types of restraints for children from newborn size to the child almost large enough for an adult safety belt. Use the restraint that is correct for your child:

- The rearward-facing infant carrier is for babies weighing up to about 20 lbs (9 kg), and less than one year old. THIS TYPE OF SEAT CANNOT BE USED IN A VEHICLE EQUIPPED WITH THE REAR SEAT DELETE FEATURE (Commercial Vehicles Only).
- The forward-facing child seat is for children from about 20 to 40 lbs (9 to 18 kg), and more than one year old.
- A convertible child seat, one that is designed to be used for children who are too heavy for a rearward-facing infant seat, may be used IN THE FORWARD FACING POSITION ONLY, IT MUST NEVER BE INSTALLED FACING TO THE REAR IN A VEHICLE EQUIPPED WITH THE REAR SEAT DELETE FEATURE (Commercial Vehicles Only). When a convertible seat is properly installed facing forward, the vehicle seat should be adjusted to the **rear most position.**

- Children more than 40 lbs (18 kg) should be secured in the passenger seat in a child restraint or belt-positioning booster seat with the seat adjusted to the **rear most position**. Older children who do not use child restraints or belt-positioning booster seats should ride properly buckled in the passenger seat with the seat adjusted to the rearmost position. Never allow children to slide the shoulder belt behind them or under their arm.

Tether Installation for Commercial Vehicles with Rear Seat Delete

To secure the child restraint upper tether strap to the vehicle, follow the instructions shown:

1. Locate the child restraint tether anchor on the lower rear of the front passenger seat.

2. Follow the child restraint manufacturer's directions for proper use of connecting the child restraint to the extended tether strap.

3. Route the tether strap under the head rest.

NOTE: Ensure that the child restraint tether strap is centered between the headrest supports underneath the head rest.

4. Using the hook attached to the child restraint tether strap, attach the child restraint tether strap to the metal anchor on the lower rear of the front passenger seat.

5. Following the child seat manufacturer's instructions, tighten the child restraint tether strap.

6. Inspect the tether anchor strap for nicks, abrasions, discoloration, and loose threads. If these, or any other condition that might affect the performance of the strap is observed, DO NOT USE. Contact your authorized dealership for a replacement part.

WARNING!

The vehicle tether anchor is designed to be used with a child restraint only. It should not be used for any other purpose. Before use, inspect the tether anchor strap for nicks, abrasions, discoloration, and loose threads. If these or any other condition that might affect the performance of the strap is observed, DO NOT USE that strap. Personal injury may result. Contact your authorized dealership for a replacement part.

ENGINE BREAK-IN RECOMMENDATIONS

A long break-in period is not required for the engine and drivetrain (transmission and axle) in your vehicle.

Drive moderately during the first 300 miles (500 km). After the initial 60 miles (100 km), speeds up to 50 or 55 mph (80 or 90 km/h) are desirable.

While cruising, brief full-throttle acceleration within the limits of local traffic laws, contributes to a good break-in. Wide-open throttle acceleration in low gear can be detrimental and should be avoided.

The engine oil installed in the engine at the factory is a high-quality energy conserving type lubricant. Oil changes should be consistent with anticipated climate conditions under which vehicle operations will occur. For the recommended viscosity and quality grades refer to "Maintenance Procedures" in "Maintaining Your Vehicle". NON-DETERGENT OR STRAIGHT MINERAL OILS MUST NEVER BE USED.

A new engine may consume some oil during its first few thousand miles (kilometers) of operation. This should be considered a normal part of the break-in and not interpreted as an indication of difficulty.

SAFETY TIPS

Transporting Passengers

NEVER TRANSPORT PASSENGERS IN THE CARGO AREA.

WARNING!

- **Do not leave children or animals inside parked vehicles in hot weather. Interior heat build-up may cause serious injury or death.**
- **It is extremely dangerous to ride in a cargo area, inside or outside of a vehicle. In a collision, people riding in these areas are more likely to be seriously injured or killed.**
- **Do not allow people to ride in any area of your vehicle that is not equipped with seats and seat belts.**

WARNING! (Continued)

- **Be sure everyone in your vehicle is in a seat and using a seat belt properly.**

Exhaust Gas

WARNING!

Exhaust gases can injure or kill. They contain carbon monoxide (CO), which is colorless and odorless. Breathing it can make you unconscious and can eventually poison you. To avoid breathing (CO) follow these safety tips:

Do not run the engine in a closed garage or in confined areas any longer than needed to move your vehicle in or out of the area.

If it is necessary to sit in a parked vehicle with the engine running, adjust your heating or cooling controls to force outside air into the vehicle. Set the blower at high speed.

If you are required to drive with the liftgate open, make sure that all windows are closed and the climate control BLOWER switch is set at high speed. DO NOT use the recirculation mode.

The best protection against carbon monoxide entry into the vehicle body is a properly maintained engine exhaust system.

Whenever a change is noticed in the sound of the exhaust system, when exhaust fumes can be detected inside the vehicle, or when the underside or rear of the vehicle is damaged, have a competent mechanic inspect the complete exhaust system and adjacent body areas for broken, damaged, deteriorated, or mispositioned parts. Open seams or loose connections could permit exhaust fumes to seep into the passenger compartment. In addition, inspect the exhaust system each time the vehicle is raised for lubrication or oil change. Replace as required.

Safety Checks You Should Make Inside the Vehicle

Seat Belts

Inspect the belt system periodically, checking for cuts, frays, and loose parts. Damaged parts must be replaced immediately. Do not disassemble or modify the system.

Front seat belt assemblies must be replaced after a collision. Rear seat belt assemblies must be replaced after a collision if they have been damaged (i.e., bent retractor, torn webbing, etc.). If there is any question regarding belt or retractor condition, replace the belt.

Airbag Warning Light

The light should come on and remain on for four to eight seconds as a bulb check when the ignition switch is first turned ON. If the light is not lit during starting, see your

authorized dealer. If the light stays on, flickers, or comes on while driving, have the system checked by an authorized dealer.

Defroster

Check operation by selecting the defrost mode and place the blower control on high speed. You should be able to feel the air directed against the windshield. See your authorized dealer for service if your defroster is inoperable.

Floor Mat Safety Information

Always use floor mats designed to fit the foot well of your vehicle. Use only floor mats that leave the pedal area unobstructed and that are firmly secured so that they cannot slip out of position and interfere with the pedals or impair safe operation of your vehicle in other ways.

WARNING!

Pedals that cannot move freely can cause loss of vehicle control and increase the risk of serious personal injury.

- **Always make sure that floor mats are properly attached to the floor mat fasteners.**
- **Never place or install floor mats or other floor coverings in the vehicle that cannot be properly secured to prevent them from moving and interfering with the pedals or the ability to control the vehicle.**
- **Never put floor mats or other floor coverings on top of already installed floor mats. Additional floor mats and other coverings will reduce the size of the pedal area and interfere with the pedals.**

(Continued)

WARNING! (Continued)

- **Check mounting of mats on a regular basis. Always properly reinstall and secure floor mats that have been removed for cleaning.**
- **Always make sure that objects cannot fall into the driver foot well while the vehicle is moving. Objects can become trapped under the brake pedal and accelerator pedal causing a loss of vehicle control.**
- **If required, mounting posts must be properly installed, if not equipped from the factory.**

Failure to properly follow floor mat installation or mounting can cause interference with the brake pedal and accelerator pedal operation causing loss of control of the vehicle.

Periodic Safety Checks You Should Make Outside the Vehicle

Tires

Examine tires for excessive tread wear and uneven wear patterns. Check for stones, nails, glass, or other objects lodged in the tread. Inspect the tread and sidewall for cuts and cracks. Check the wheel nuts for tightness. Check the tires (including spare) for proper pressure.

Lights

Have someone observe the operation of exterior lights while you work the controls. Check turn signal and high beam indicator lights on the instrument panel.

Door Latches
Check for positive closing, latching, and locking.

Fluid Leaks
Check area under vehicle after overnight parking for fuel, engine coolant, oil, or other fluid leaks. Also, if gasoline fumes are detected or if fuel, power steering fluid, or brake fluid leaks are suspected, the cause should be located and corrected immediately.

UNDERSTANDING THE FEATURES OF YOUR VEHICLE

CONTENTS

■ Mirrors 112

□ Inside Day/Night Mirror — If Equipped . . 112

□ Automatic Dimming Mirror — If Equipped 113

□ Outside Mirrors 113

□ Driver's Automatic Dimming Mirror — If Equipped 114

□ Outside Mirror Folding Feature 114

□ Power Mirrors — If Equipped 114

□ Heated Mirrors — If Equipped 115

□ Tilt Mirrors In Reverse (Available With Memory Seat Only) — If Equipped 115

□ Illuminated Vanity Mirrors — If Equipped 116

■ Blind Spot Monitoring — If Equipped 117

□ Rear Cross Path 123

□ Modes Of Operation 124

■ Uconnect™ Phone — If Equipped 125

■ Voice Command — If Equipped 126

■ Seats 126
□ Manual Front And Second Row Seat Adjuster 127
□ Manual Reclining Seats — If Equipped 128
□ Manual Lumbar Adjust Lever — If Equipped 129
□ Eight–Way Power Seats — If Equipped 130
□ Heated Seats — If Equipped 131
□ Adjusting Head Restraints 132
□ Stow 'n Go® Seating — If Equipped 136
□ Easy Access Seating 139
□ Swivel 'n Go™ Premium Seating — If Equipped 140
□ Second Row Bench Seat — If Equipped . . . 148
□ Third Row Power Recline — If Equipped . . 149
■ Driver Memory Seat — If Equipped 153
□ Setting Memory Positions And Linking RKE Transmitter To Memory 154
□ Easy Entry/Exit Seat (Available With Memory Seat Only) 156
■ To Open And Close The Hood 158
■ Lights 159
□ Interior Lighting 160
□ Parking Lights 161
□ Headlights 161
□ Automatic Headlights — If Equipped 162
□ Headlights On With Wipers — If Equipped 163

□ Headlight Delay — If Equipped 163
□ Daytime Running Lights (Canada/Fleet Vehicles Only) 164
□ Front Fog Lights — If Equipped 164
□ Battery Protection 164
□ Multifunction Lever 165
□ Turn Signals 165
□ High/Low Beam Switch 166
□ Flash-To-Pass 166
□ Smartbeam™ — If Equipped 166
■ Windshield Wipers And Washers 167
□ Rain Sensing Wipers — If Equipped 170
■ Tilt Steering Column 171
■ Adjustable Pedals — If Equipped 172
■ Electronic Speed Control — If Equipped 174
□ To Activate 175
□ To Set At A Desired Speed 175
□ Deactivating Electronic Speed Control 176
□ Resuming Speed 176
□ Varying The Speed Setting 176
□ Accelerating To Pass 177
■ Parksense® Rear Park Assist — If Equipped . 177
□ Parksense® Sensors 178
□ Parksense® Warning Display 178
□ Parksense® Display 179
□ Enabling/Disabling Parksense® 182

- Service Parksense® 183
- Cleaning Parksense® 183
- Parksense® System Usage Precautions 183

■ Parkview® Rear Back Up Camera — If Equipped 186
- Turning Parkview® On Or Off — With Navigation/Multimedia Radio 188
- Turning Parkview® On Or Off — Without Navigation/Multimedia Radio 188

■ Overhead Consoles 189
- Front Overhead Console 189

■ Garage Door Opener — If Equipped 192
- Programming HomeLink® 193
- Gate Operator/Canadian Programming . . . 196
- Security 197
- Troubleshooting Tips 197
- General Information 197

■ Power Sunroof — If Equipped 198
- Power Sunroof Operation 198

■ Electrical Power Outlets — If Equipped 201

■ Power Inverter — If Equipped 203

■ Cupholders 205
- Instrument Panel Cupholders 206
- Interior Bottle Holders 206
- Smoker's Package Kit — If Equipped 207

■ Storage 207
- Glove Compartments 207

□ Door Trim Panel Storage 209
□ Driver Seatback Storage — If Equipped . . . 210
□ Umbrella Holder 210
□ Second Row Floor Storage Bins 211
□ Storage Bin Safety Warning 212
□ Center And Rear Overhead Console Storage — If Equipped 213
□ Coat Hooks 214
□ Cargo Area Storage 214
■ Console Features 215
□ Basic Console 215
□ Premium Console — If Equipped 216
■ Rear Window Features 220
□ Rear Window Defroster 220
■ Load-Leveling System 221
■ Roof Luggage Rack — If Equipped 222
■ Sun Screens — If Equipped 224

MIRRORS

Inside Day/Night Mirror — If Equipped

A two-point pivot system allows for horizontal and vertical adjustment of the mirror. Adjust the mirror to center on the view through the rear window.

Headlight glare can be reduced by moving the small control under the mirror to the night position (toward the rear of the vehicle). The mirror should be adjusted while set in the day position (toward the windshield).

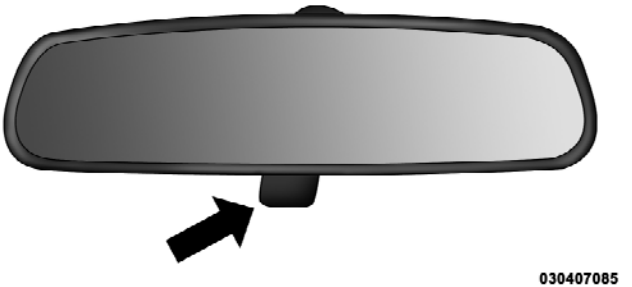

Manual Rearview Mirror

Automatic Dimming Mirror — If Equipped

This mirror automatically adjusts for headlight glare from vehicles behind you. You can turn the feature on or off by pressing the button at the base of the mirror. A light next to the button will illuminate to indicate when the dimming feature is activated.

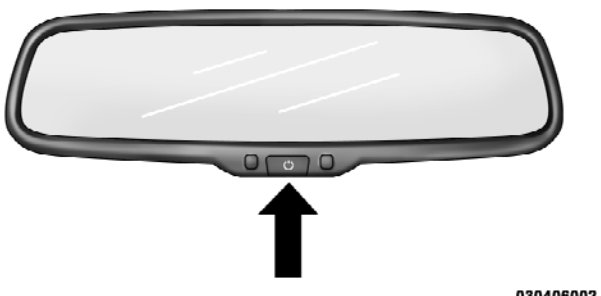

Automatic Dimming Mirror

CAUTION!

To avoid damage to the mirror during cleaning, never spray any cleaning solution directly onto the mirror. Apply the solution onto a clean cloth and wipe the mirror clean.

Outside Mirrors

To receive maximum benefit, adjust the outside mirror(s) to center on the adjacent lane of traffic with a slight overlap of the view obtained on the inside mirror.

WARNING!

Vehicles and other objects seen in an outside convex mirror will look smaller and farther away than they really are. Relying too much on side convex mirrors could cause you to collide with another vehicle or other object. Use your inside mirror when judging the size or distance of a vehicle seen in a side convex mirror.

Driver's Automatic Dimming Mirror — If Equipped

The driver's outside mirror will automatically adjust for glare from vehicles behind you. This feature is controlled by the inside automatic dimming mirror and can be turned on or off by pressing the button at the base of the inside mirror. The mirror will automatically adjust for headlight glare when the inside mirror adjusts.

Outside Mirror Folding Feature

All outside mirrors are hinged and may be moved either forward or rearward to resist damage. The hinges have three detent positions: full forward, full rearward and normal.

Power Mirrors — If Equipped

Use the mirror select switch located on the driver's door trim panel to adjust the view obtained in the outside mirrors. Press the switch to the L (left) or R (right) for mirror selection. Press the mirror select switch again to guard against accidentally moving a mirror position. The mirror selection will also automatically turn off after 30 seconds.

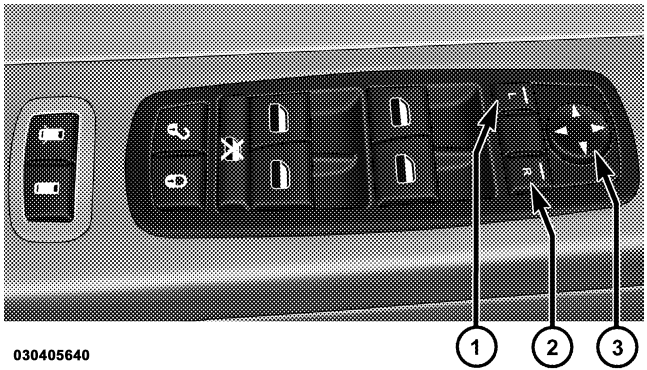

Power Side Mirror Adjust

1 — Left Mirror
2 — Right Mirror
3 — Adjusting Switch

Select a mirror and press one of the four arrows for the direction you want the mirror to move.

Driver's side power mirror preselected positions can be controlled by the optional Driver Memory Seat Feature. Refer to "Driver Memory Seat" in "Understanding the Features of Your Vehicle" for further information.

Heated Mirrors — If Equipped

These mirrors are heated to melt frost or ice. This feature is activated whenever you turn on the rear window defroster. Refer to "Rear Window Features" in "Understanding the Features of Your Vehicle" for further information.

Tilt Mirrors in Reverse (Available with Memory Seat Only) — If Equipped

Tilt Mirrors in Reverse provides automatic outside mirror positioning which will aid the drivers view of the ground rearward of the front doors. The driver's outside mirror will move slightly downward from the present position when the vehicle is shifted into REVERSE. The driver's outside mirror will then return to the original position

when the vehicle is shifted out of REVERSE position. Each stored memory setting will have an associated Tilt Mirrors in Reverse position.

NOTE: The Tilt Mirrors in Reverse feature is not enabled when delivered from the factory. The Tilt Mirrors in Reverse feature can be enabled or disabled in the Electronic Vehicle Information Center (EVIC). Refer to "Electronic Vehicle Information Center (EVIC)/Customer-Programmable Features" in "Understanding Your Instrument Panel" for further information.

Illuminated Vanity Mirrors — If Equipped

An illuminated vanity mirror is located on the sun visor. To use the mirror, rotate the sun visor down and swing the mirror cover upward. The lights turn on automatically. Closing the mirror cover turns off the lights.

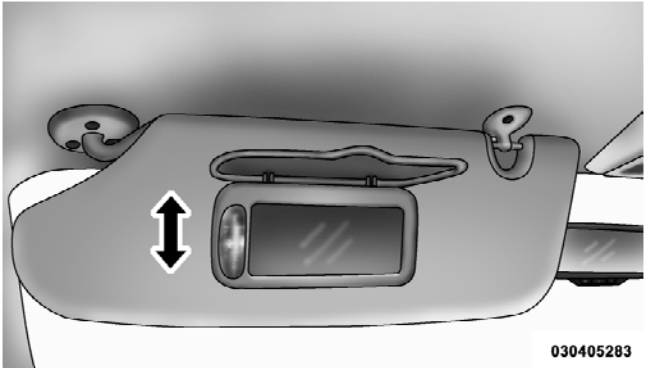

Illuminated Mirror

BLIND SPOT MONITORING — IF EQUIPPED

The Blind Spot Monitoring (BSM) system uses two radar-based sensors, located inside the rear bumper fascia, to detect Highway licensable vehicles (automobiles, trucks, motorcycles etc.) that enter the blind spot zones from the rear/front/side of the vehicle.

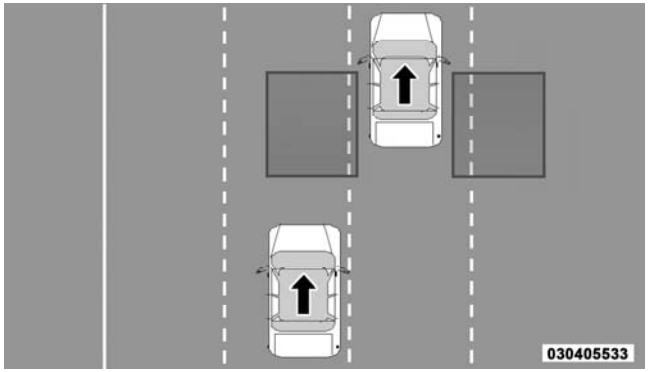

Rear Detection Zones

When the vehicle is started, the BSM warning light will be momentarily illuminated in both outside rear view mirrors to let the driver know that the system is operational. The BSM system sensors operate when the vehicle is in any forward gear or REVERSE and enters stand by mode when the vehicle is in PARK.

The BSM detection zone covers approximately one lane on both sides of the vehicle (11 ft or 3.35 m). The zone starts at the outside rear view mirror and extends approximately 20 ft (6 m) to the rear of the vehicle. The BSM system monitors the detection zones on both sides of the vehicle when the vehicle speed has reached approximately 6 mph (10 km/h) or higher and will alert the driver of vehicles in these areas.

NOTE:

- The BSM system does NOT alert the driver about rapidly approaching vehicles that are outside the detection zones.

- The BSM system detection zone DOES NOT change if your vehicle is towing a trailer. Therefore, visually verify the adjacent lane is clear for both your vehicle and trailer before making a lane change. If the trailer or other object (i.e., bicycle, sports equipment) extends beyond the side of your vehicle, this may result in the BSM warning light remaining illuminated the entire time the vehicle is in a forward gear.

The area on the rear fascia where the radar sensors are located must remain free of snow, ice, and dirt/road contamination so that the BSM system can function properly. Do not block the area of the rear fascia where the radar sensors are located with foreign objects (bumper stickers, bicycle racks, etc.).

Sensor Locations

The BSM system notifies the driver of objects in the detection zones by illuminating the BSM warning light located in the outside mirrors.

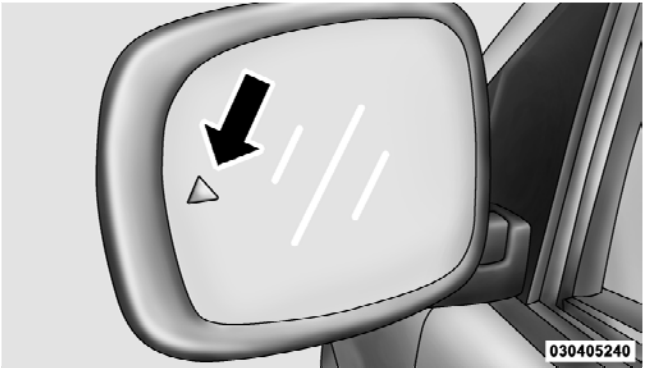

BSM Warning Light

The BSM system can also be configured to sound an audible (chime) alert and mute the radio to notify the driver of objects that have entered the detection zones. Refer to “Modes Of Operation” for further information.

The BSM system monitors the detection zone from three different entry points (Side, Rear, Front) while driving to see if an alert is necessary. The BSM system will issue an alert during these types of zone entries.

Entering From The Side

Vehicles that move into your adjacent lanes from either side of the vehicle.

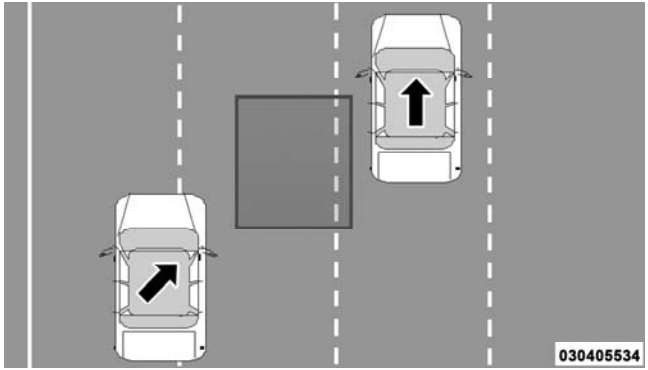

Side Monitoring

Entering From The Rear

Vehicles that come up from behind your vehicle on either side and enter the rear detection zone with a relative speed of less than 30 mph (48 km/h).

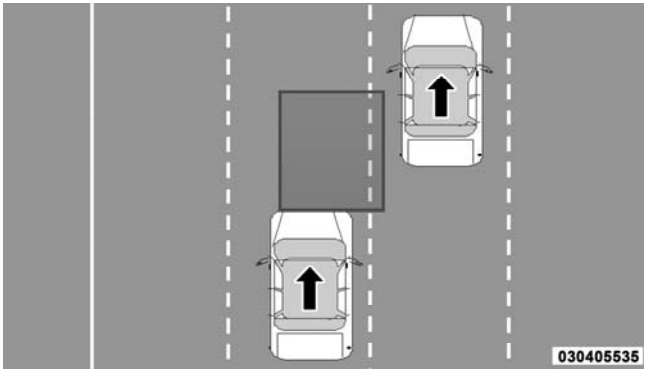

Rear Monitoring

Overtaking Traffic

If you pass another vehicle slowly (with a relative speed less than 10 mph (16 km/h) and the vehicle remains in the blind spot for approximately 1.5 seconds, the warning light will be illuminated. If the difference in speed between the two vehicles is greater than 10 mph (16 km/h), the warning light will not illuminate.

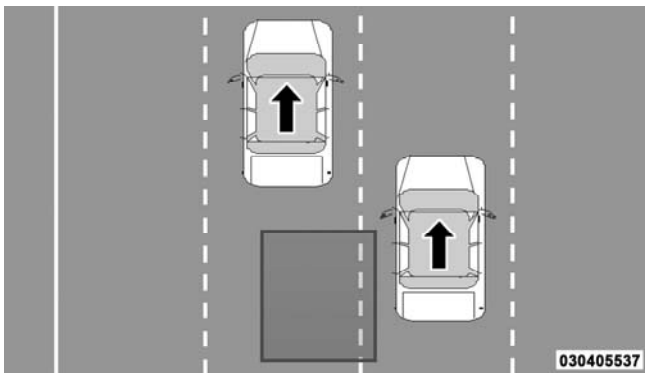

Overtaking/Approaching

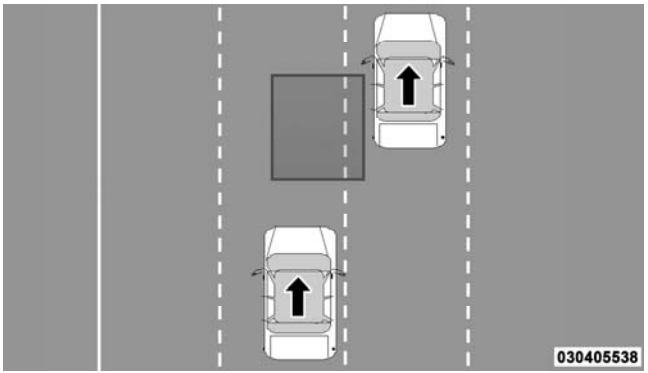

Overtaking/Passing

The BSM system is designed not to issue an alert on stationary objects such as guardrails, posts, walls, foliage, berms, etc. However, occasionally the system may alert on such objects. This is normal operation and your vehicle does not require service.

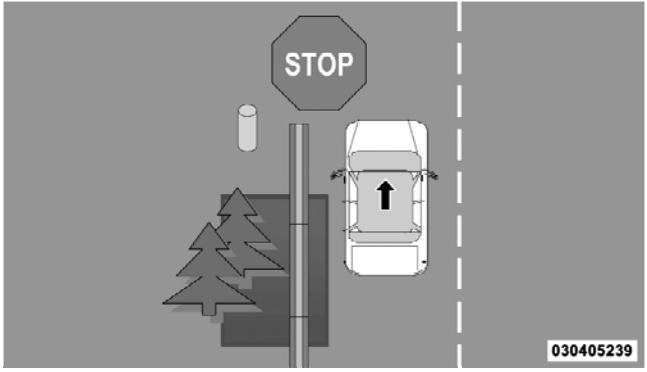

Stationary Objects

The BSM system will not alert you of objects that are traveling in the opposite direction of the vehicle in adjacent lanes.

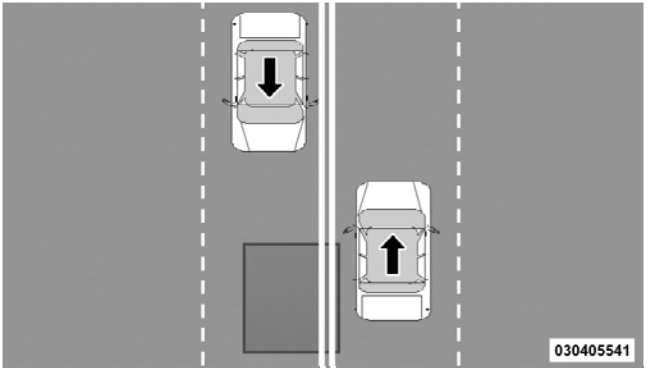

Opposing Traffic

WARNING!

The Blind Spot Monitoring system is only an aid to help detect objects in the blind spot zones. The BSM system is not designed to detect pedestrians, bicyclists, or animals. Even if your vehicle is equipped with the BSM system, always check your vehicles mirrors, glance over your shoulder, and use your turn signal before changing lanes. Failure to do so can result in serious injury or death.

Rear Cross Path

The Rear Cross Path (RCP) feature is intended to aid the driver when backing out of parking spaces where their vision of oncoming vehicles may be blocked. Proceed slowly and cautiously out of the parking space until the rear end of the vehicle is exposed. The RCP system will then have a clear view of the cross traffic and if an oncoming vehicle is detected, alert the driver.

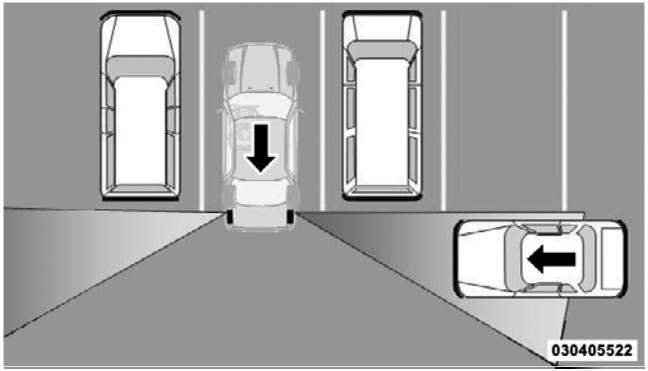

RCP Detection Zones

RCP monitors the rear detection zones on both sides of the vehicle, for objects that are moving toward the side of the vehicle with a minimum speed of approximately 1 to 2 mph (1 km/h to 3 km/h), to objects moving a maximum of approximately 10 mph (16 km/h), such as in parking lot situations.

NOTE: In a parking lot situation, oncoming vehicles can be obscured by vehicles parked on either side. If the sensors are blocked by other structures or vehicles, the system will not be able to alert the driver.

When RCP is on and the vehicle is in REVERSE, the driver is alerted using both the visual and audible alarms, including radio muting.

WARNING!

RCP is not a Back Up Aid system. It is intended to be used to help a driver detect an oncoming vehicle in a parking lot situation. Drivers must be careful when backing up, even when using RCP. Always check carefully behind your vehicle, look behind you, and be sure to check for pedestrians, animals, other vehicles, obstructions, and blind spots before backing up. Failure to do so can result in serious injury or death.

Modes Of Operation

Three selectable modes of operation are available in the Electronic Vehicle Information Center (EVIC). Refer to "Electronic Vehicle Information Center (EVIC)/Personal Settings (Customer-Programmable Features)" in "Understanding Your Instrument Panel" for further information.

Blind Spot Alert

When operating in Blind Spot Alert mode, the BSM system will provide a visual alert in the appropriate side view mirror based on a detected object. However, when the system is operating in RCP, the system will respond with both visual and audible alerts when a detected object is present. Whenever an audible alert is requested, the radio is muted.

Blind Spot Alert Lights/Chime

When operating in Blind Spot Alert Lights/Chime, the BSM system will provide a visual alert in the appropriate side view mirror based on a detected object. If the turn

signal is then activated, and it corresponds to an alert present on that side of the vehicle, an audible chime will also be sounded. Whenever a turn signal and detected object are present on the same side at the same time, both the visual and audio alerts will be issued. In addition to the audible alert the radio (if on) will also be muted.

NOTE:

- Whenever an audible alert is requested by the BSM system, the radio is also muted.
- If the Hazard Flashers are on, the system will request the appropriate visual alert only.

  When the system is in RCP, the system shall respond with both visual and audible alerts when a detected object is present. Whenever an audible alert is requested, the radio is also muted. Turn/hazard signal status is ignored; the RCP state always requests the chime.

Blind Spot Alert Off

When the BSM system is turned off there will be no visual or audible alerts from either the BSM or RCP systems.

NOTE: The BSM system will store the current operating mode when the vehicle is shut off. Each time the vehicle is started the previously stored mode will be recalled and used.

Uconnect™ Phone — IF EQUIPPED

Uconnect™ Phone is a hands-free system that allows you to use voice commands to dial a phone number stored in your cellular phone. Press the Uconnect™ Phone button on the radio or steering wheel controls (if equipped) and follow the instructions to pair the cellular phone.

Refer to "Uconnect™ Phone" in the Uconnect™ User Manual located on the DVD for further details.

VOICE COMMAND — IF EQUIPPED

Voice Command can be initiated by pressing the VR button VR located on the radio or steering wheel controls (if equipped).

Refer to "Voice Command" in the Uconnect™ Phone User Manual located on the DVD for further details.

SEATS

Seats are a primary part of the Occupant Restraint System of the vehicle. They need to be used properly for safe operation of the vehicle.

WARNING!

- **DO NOT allow people to ride in any area of your vehicle that is not equipped with seats and seat belts. In a collision, people riding in these areas are more likely to be seriously injured or killed.**
- **Be sure everyone in your vehicle is in a seat and using a seat belt properly.**

Manual Front And Second Row Seat Adjuster

The adjusting bar is located under the front of the seat. Pull the bar upward and move the seat to the desired position. Release the bar to lock the seat into position. Using body pressure, move forward and rearward on the seat to be sure the seat adjusters have latched.

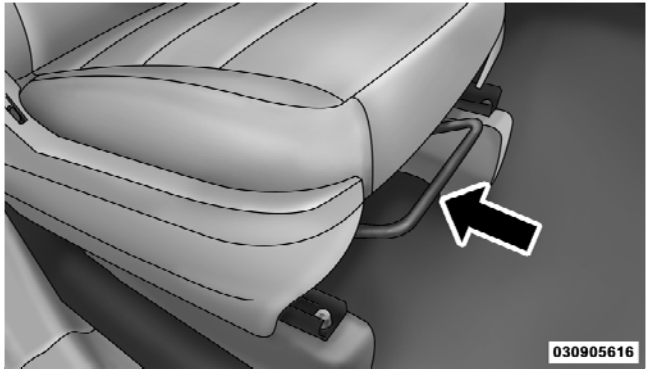

Manual Seat Adjuster

WARNING!

Adjusting a seat while the vehicle is moving is dangerous. The sudden movement of the seat could cause you to lose control. The seat belt might not be properly adjusted and you could be injured. Adjust any seat only while the vehicle is parked.

Manual Reclining Seats — If Equipped

The recliner control lever is on the outboard side of the seat. To recline, lean forward slightly, lift the lever, then push back to the desired position and release the lever. Lean forward and lift the lever to return the seatback to its normal position. Using body pressure, lean forward and rearward on the seat to be sure the seatback has latched.

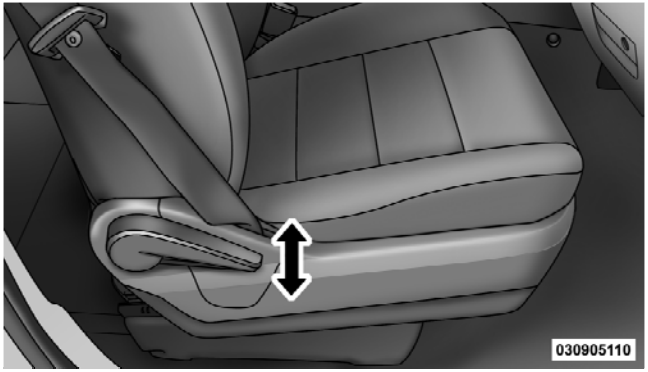

Manual Reclining Seat Control

WARNING!

DO NOT ride with the seatback reclined so that the shoulder belt is no longer resting against your chest. In a collision you could slide under the seat belt and be seriously or fatally injured. Use the recliner only when the vehicle is parked.

Manual Lumbar Adjust Lever — If Equipped

The lumbar adjustment lever is located on the outboard side of the seat. To increase the support, rotate the lever downward. To decrease the support, rotate the handle upward.

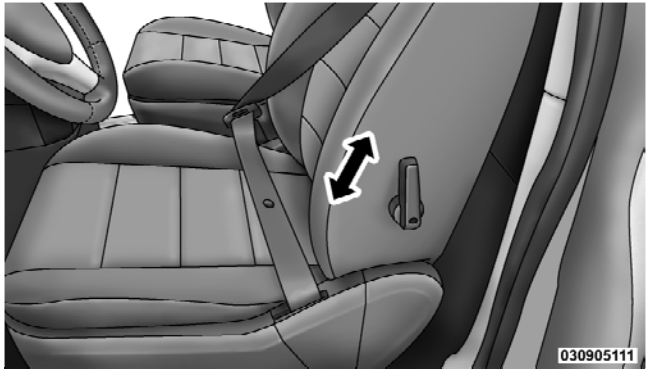

Manual Lumbar Lever

WARNING!

Adjusting a seat while the vehicle is moving is dangerous. The sudden movement of the seat could cause you to lose control. The seat belt might not be properly adjusted and you could be injured. Adjust any seat only while the vehicle is parked.

Eight–Way Power Seats — If Equipped

The power seat switches are located on the outboard side of the seats. The front switch controls the up/down, forward/rearward and tilt adjustment. The rear switch controls the recline adjustment of the seatback.

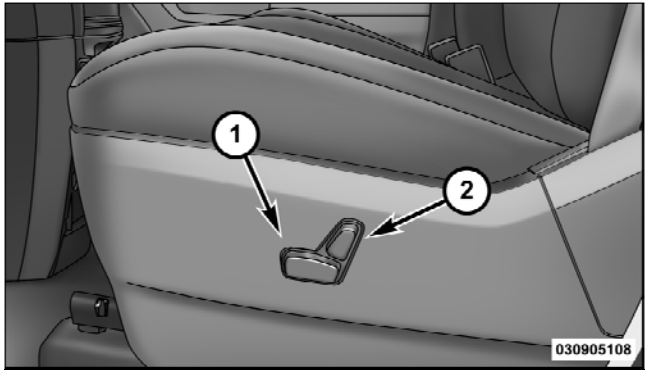

Driver Power Seat Switch

1 — Front Switch 2 — Rear Switch

WARNING!

Adjusting a seat while the vehicle is moving is dangerous. The sudden movement of the seat could cause you to lose control. The seat belt might not be properly adjusted and you could be injured. Adjust any seat only while the vehicle is parked.

CAUTION!

DO NOT place any article under a power seat or impede its ability to move as it may cause damage to the seat controls. Seat travel may become limited if movement is stopped by an obstruction in the seat's path.

Heated Seats — If Equipped

This feature heats the front driver and passenger seats. The controls for front heated seats are located on the center instrument panel area.

After turning the ignition ON, you can choose from High, Low, or Off heat settings. Amber indicator lights in each switch indicate the level of heat in use. Two indicator lights will illuminate for High, one for Low, and none for Off.

Press the switch once to select High-level heating. Press the switch a second time to select Low-level heating. Press the switch a third time to shut the heating elements Off.

Second row heated seat switches are located in the sliding side door handle trim panels and function the same as front switches.

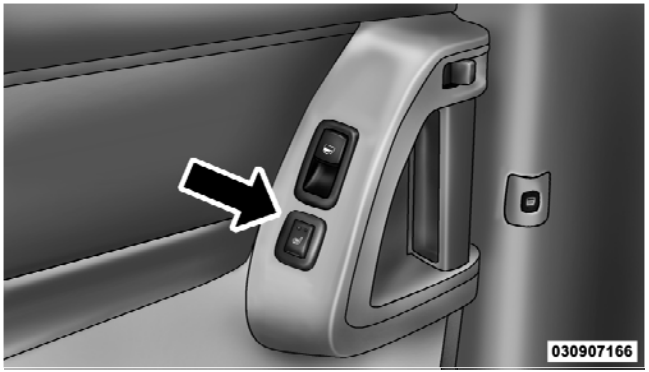

Heated Seat Switch

WARNING!

- **Persons who are unable to feel pain to the skin because of advanced age, chronic illness, diabetes, spinal cord injury, medication, alcohol use, exhaustion or other physical condition must exercise care when using the seat heater. It may cause burns even at low temperatures, especially if used for long periods of time.**
- **Do not place anything on the seat that insulates against heat, such as a blanket or cushion. This may cause the seat heater to overheat. Sitting in a seat that has been overheated could cause serious burns due to the increased surface temperature of the seat.**

CAUTION!

Repeated overheating of the seat could damage the heating element and/or degrade the material of the seat.

Adjusting Head Restraints

Head restraints can reduce the risk of injury in the event of a rear impact. The head restraint should be adjusted so the top of the head restraint is located above the top of your ear.

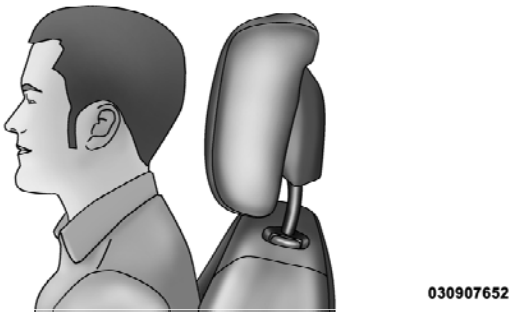

Adjusted Head Restraint

To raise the head restraint, pull upward on the head restraint (on some models, you may need to press the push button). To lower the head restraint, press the push button, located at the base of the head restraint, and push downward on the head restraint.

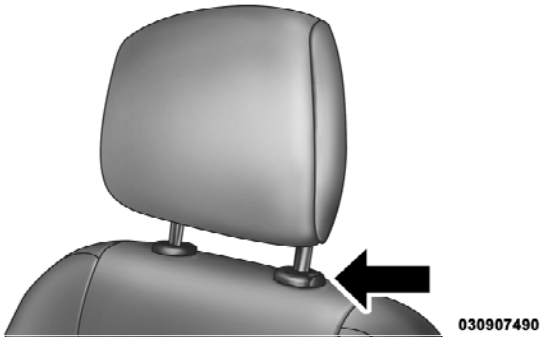

Push Button

Active Head Restraint — If Equipped

For comfort the Active Head Restraints can be tilted forward and backward. To tilt the head restraint closer to the back of your head, pull outward on the bottom of the

head restraint. Push rearward on the bottom of the head restraint to move the head restraint away from your head.

022607494

Active Head Restraint (Normal Position)

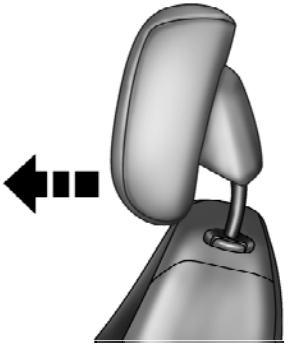

030907533

Active Head Restraint (Tilted)

NOTE:

- The head restraints should only be removed by qualified technicians, for service purposes only. If either of the head restraints require removal, see your authorized dealer.

- In the event of deployment of an Active Head Restraint, refer to "Occupant Restraints/Resetting Active Head Restraints (AHR)" in "Things to Know Before Starting Your Vehicle" for further information.

WARNING!

- **Driving a vehicle with the head restraints removed or improperly adjusted could cause serious injury or death in the event of a collision. The head restraints should always be checked prior to operating the vehicle and never adjusted while the vehicle is in motion. Always adjust the head restraints when the vehicle is in PARK.**

(Continued)

WARNING! (Continued)

- **Do not place items over the top of the Active Head Restraint, such as coats, seat covers or portable DVD players. These items may interfere with the operation of the Active Head Restraint in the event of an accident and could result in serious injury or death.**
- **Active Head Restraints may be deployed if they are struck by an object such as a hand, foot or loose cargo. To avoid accidental deployment of the Active Head Restraint ensure that all cargo is secured, as loose cargo could contact the Active Head Restraint during sudden stops. Failure to follow this warning could cause personal injury if the Active Head Restraint is deployed.**

Stow 'n Go® Seating — If Equipped

On vehicles equipped with Stow 'n Go® seating, the second and third row seats may be folded into the floor for convenient storage.

To Fold Second Row Seats

1. Move the front seat fully forward.

2. Lower the head restraints and raise the armrests on the second row seat.

3. Slide the storage bin locking mechanism to the "LOCK" position and then pull up on the storage bin latch to open the cover.

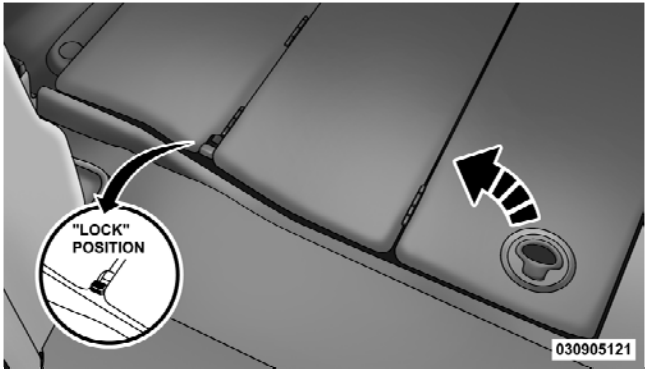

Storage Bin Cover Lock Release

4. Pull up on the seatback recliner lever located on the outboard side of the seat and fold the seatback down. To assure the seatback is latched in the folded position, additional downward pressure on the seatback may be required when folding.

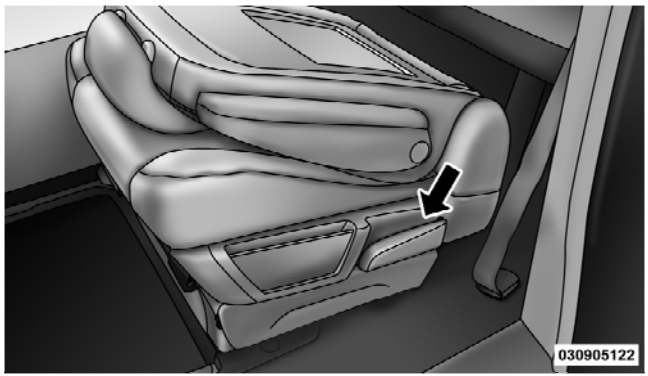

Second Row Seatback Release Lever

5. Pull rearward on the release strap located at the rear of the seat and tumble the seat forward into the storage bin.

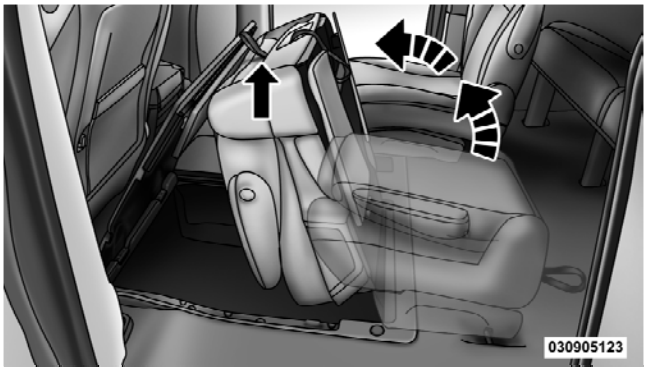

Second Row Seat Release Strap

6. Close the storage bin cover.

CAUTION!

The storage bin cover must be locked and flat to avoid damage from contact with the front seat tracks, which have minimal clearance to the cover.

WARNING!

In an accident, serious injury could result if the seat storage bin covers are not properly latched.

- **DO NOT drive the vehicle with the storage bin covers open.**
- **Keep the storage bin covers closed and latched while the vehicle is in motion.**
- **DO NOT use a storage bin latch as a tie down.**

To Unfold Second Row Seats

1. Pull up on the storage bin latch to open the cover.
2. Pull up on the handle to lift the seat out of the storage bin and push the seat rearward to latch the seat anchors.

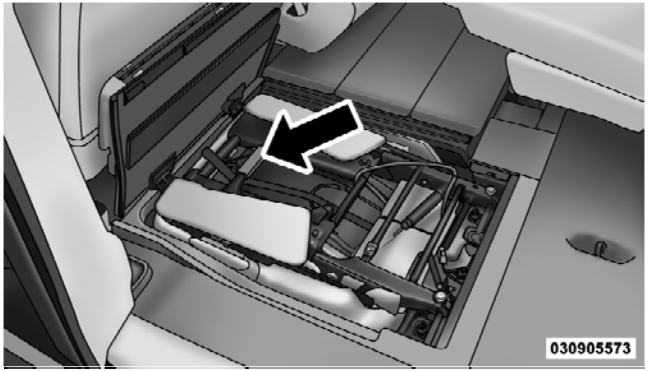

Second Row Seat Release Handle

3. Pull upward on the seatback recliner lever, located on the outboard side of the seat, to return the seatback to its full upright position.

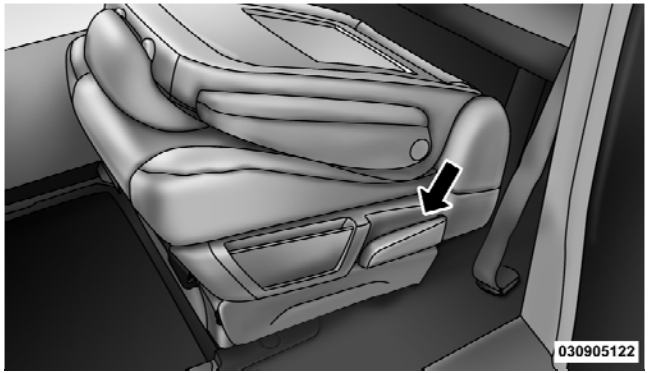

Second Row Seatback Release Lever

4. Adjust the head restraint to the desired position, close the storage bin cover and slide the storage bin locking mechanism to the "Unlocked" position.

Easy Access Seating

The second row Stow 'n Go® seats can be tilted forward for easy access to the third row seat or rear cargo area.

To tilt the seat, pull forward on the release strap located on the front of the seat between the seatback and seat cushion and tilt the seat fully forward.

To return the seat to its upright position, push rearward on the seatback until it latches. Always ensure that it is fully latched.

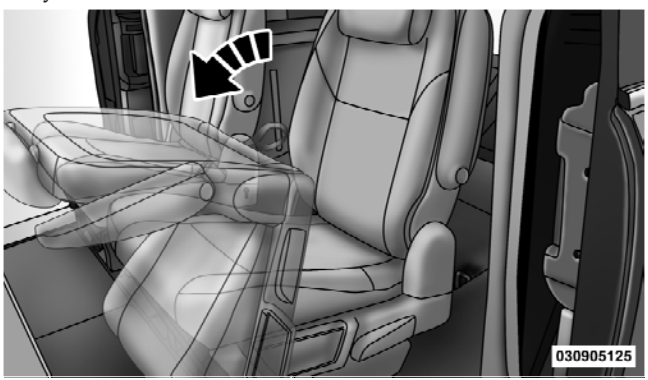

Tilting Second Row Stow 'n Go® Seat

WARNING!

In the event of a collision you could be injured if the seat is not fully latched.

Swivel 'n Go™ Premium Seating — If Equipped

Premium second row Swivel 'n Go™ Seating features include:

- A table that installs between the second and third row seats. The table disassembles and stows in the hidden second row floor storage bin
- Seats rotate to face forward or rearward
- Seat belts are integrated into the swivel seats
- Dual folding armrests
- A side storage pocket that will accommodate a phone or handheld game
- Seats are removable

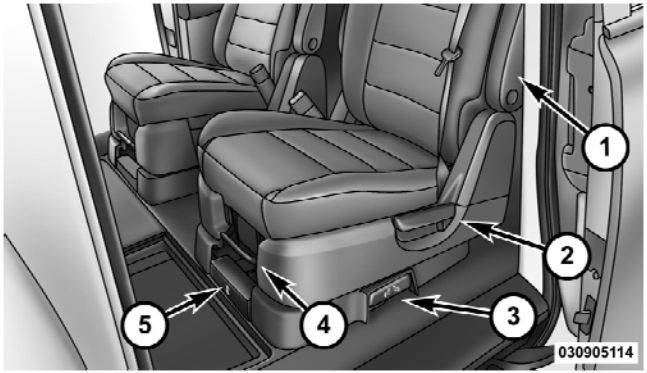

Swivel 'n Go™ Seating Features

1 — Moveable Armrest
2 — Seatback Release
3 — Swivel Release
4 — Fore-Aft Adjustment
5 — Seat Release

WARNING!

When the seatback release handle is lifted, the seatback will rotate forward. To avoid injury, if you are not seated in the seat, stay clear from the area in the path of the rotating seatback.

To swivel the seat: Pull the lower handle on the outboard side of the seat and push the side of the seatback to begin rotation. Once the seat begins to rotate, the handle may be released. The seat locks in position once reaching the forward or rearward positions only.

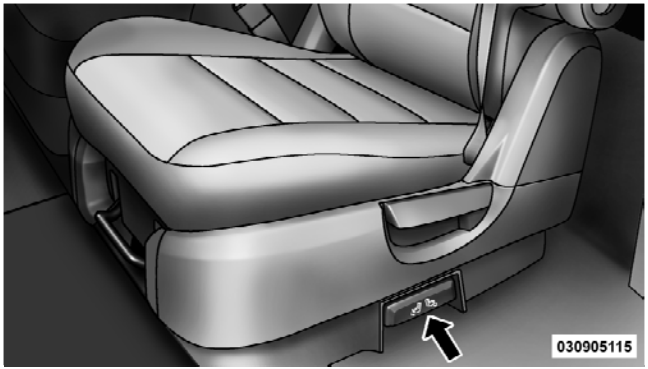

Swivel Release

Seatbacks fold forward on an angle, not flat. This allows the seats to swivel when the seatbacks are folded.

WARNING!

Failure to comply with the following conditions could result in serious injury or even death:

- **NEVER place any child seat or infant carrier in the Swivel 'n Go™ seat while it is in the rearward facing position.**
- **The swivel seat should be locked in the forward position when using any child seat or infant carriers, with the vehicle in motion.**
- **Occupants riding in Swivel 'n Go™ seating must be wearing their seat belt and the seat must be locked in either the forward-facing or rearward-facing position.**
- **Make sure the Swivel 'n Go™ seat is in a locked position with the release handle fully engaged. Test the seat after it is locked to see that it doesn't swivel.**

Removing Swivel 'n Go™ Premium Seating — If Equipped

1. Remove any obstructions from the floor behind the seat, and stow the third row seat.

2. Pull up on the release bar located at the bottom front edge of the swivel seat.

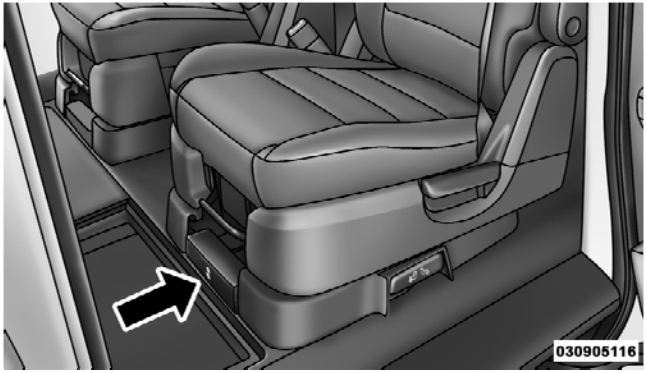

Release Bar

3. From behind the seat, lift up on the rear of the seat cushion while pulling the seat in a rearward direction.

4. Remove the seat from vehicle through the liftgate. Rollers are part of the seat frame and will ease the removal process.

5. Lower the release handle located at the bottom front edge of the seat.

Each seat weighs about 90 lbs (41 kg).

NOTE: Electrical contacts for the available heated seats automatically disengage or engage as the seat is removed or installed. The contacts slide past each other as the seat is rolled to and from the strikers.

When reinstalling the seat, make certain to lower the release handle to ensure the seat is latched securely.

WARNING!

In a collision, you or others in your vehicle could be injured if seats are not properly latched to their floor attachments. Always be sure the seats are fully latched.

Swivel 'n Go™ Premium Seating Table — If Equipped

The Swivel 'n Go™ Seating Table consists of an easily assembled post and top.

Second Row Seating and Table

The table and leg are stored beneath the floor when not in use. To install the table follow these steps:

1. Open the floor storage cover in front of the second row seats.

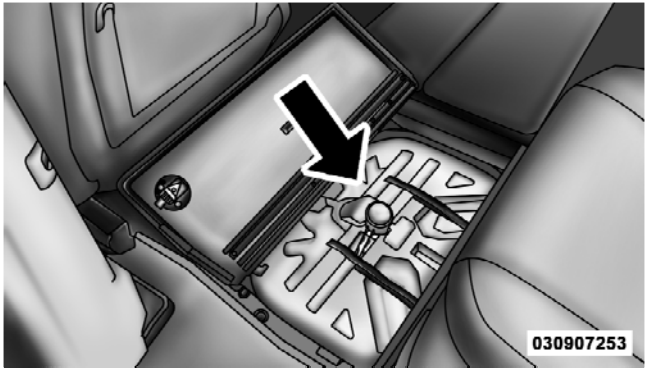

Table and Leg Storage

2. Remove the pole and table top by loosening the hook and loop straps.

3. Swivel the second row seats so they are facing the rear.

4. Insert pole into base by aligning the lock button into notch of the base.

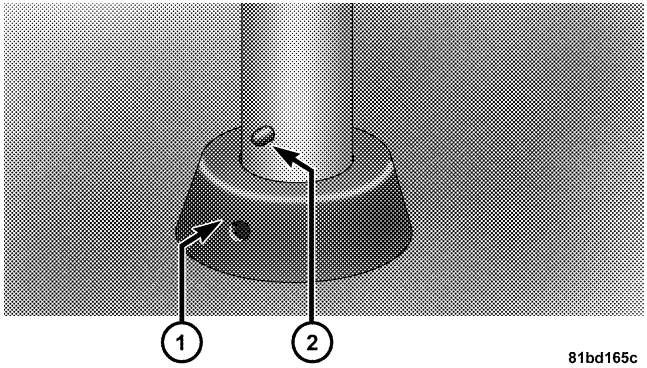

Installing Table Leg Into Base

1 — Table Base 2 — Lock/Release Button

5. Twist the pole in a clockwise rotation until it stops.

NOTE: You will hear an audible "click" when the lock button engages the base.

6. Place the table top over the installed pole aligning with the mating feature of the underside of the table top. Apply pressure on the table top and press downward.

NOTE: You will hear an audible "click" when the table latch engages the pole.

WARNING!

Failure to comply with the following conditions could result in serious injury or even death:

- **DO NOT install the table while vehicle is in motion.**
- **NEVER drive the vehicle with only the pole installed.**
- **DO NOT place heavy or sharp objects on table.**
- **DO NOT place liquid drinks on the table, use available cupholders.**
- **Second row seats must be locked in the rearward facing position before installing the table.**

To separate the table top from the pole, follow these steps:

1. Locate the release latch on the underside of the table top.

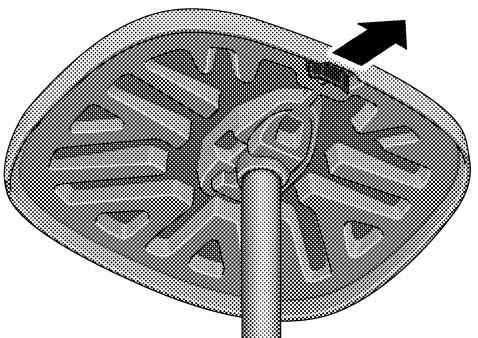

Table Top Release

2. Pull horizontally on the latch to activate the release from the pole.

3. While pulling on the latch, pull upward to remove the table top from the pole.

NOTE: The table top should be removed from the leg prior to removing the leg from its mounting base.

4. Locate the release button on the pole. Press the release button firmly to activate the release from the base.

5. While pressing the release button, twist the pole in a counterclockwise rotation until it stops. Pull upward to remove the pole from the base.

6. Place the pole on the underside of the table top and secure with the hook and loop straps.

7. Once the pole and table top are secured, you may place them in the floor storage bin in front of the second row seats.

NOTE: Always store the table and pole in the floor storage bin when not in use.

Plastic Grocery Bag Retainer Hooks

Retainer hooks which will hold plastic grocery bag handles are built into the seatbacks of all rear seats and some front seats. The floor supports the partial weight of the bagged goods.

Second Row Bench Seat — If Equipped

While the bench seat does not stow in the floor, it is removable for added cargo space. Release levers are located on the rear leg assemblies, near the floor. To remove the seat, squeeze each release handle and rotate downwards to deploy the wheels. A lock indicator button pops up when the seat is unlocked. The seat assembly can now be removed from the vehicle and moved on its Easy Out® Rollers.

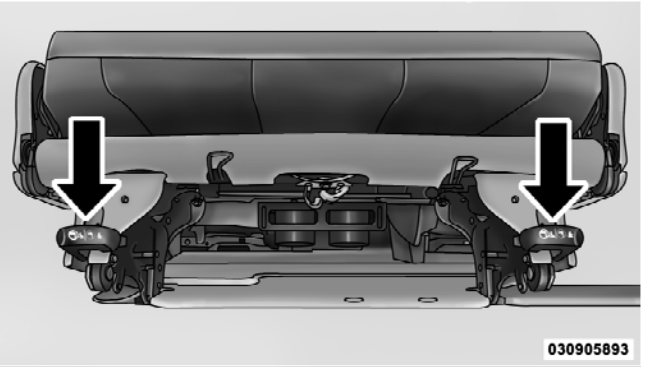

Release Handles

To reinstall the seat, align the seat into the detent positions on the floor. Squeeze the release handle and rotate upward until the lock indicator button returns into the handle.

WARNING!

If not properly latched, the bench seats could become loose. Personal injuries could result. After reinstalling these seats, be sure the red indicator button on the release handles return into the handles.

Third Row Power Recline — If Equipped

The power recline feature, located on the side of the seat cushion, adjusts the seatback angle forward/rearward for occupant comfort.

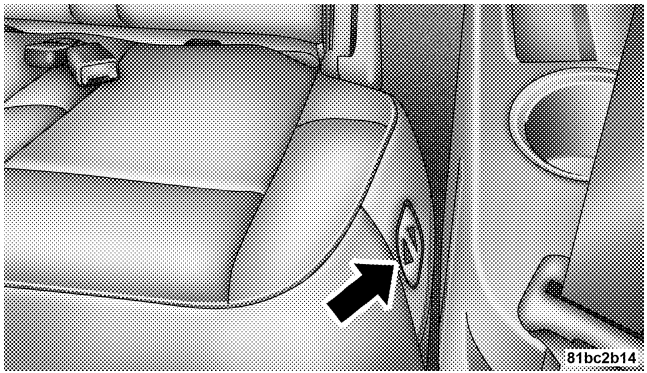

Third Row Power Seat Switch

Third Row Power Seat Switch — If Equipped

A one-touch power folding seat switch is located in the left rear trim panel as part of a switch bank.

The switch is only functional when the liftgate is open and the vehicle is in PARK.

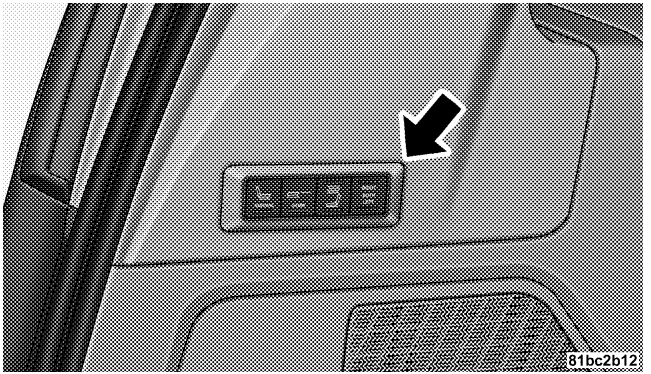

One Touch Folding Seat Third Row

The rear switch bank allows multiple power folding and unfolding positions for the third row seats.

Left and right third row seats can be folded individually or together. The third row power folding seat adjusts to the following positions using the switch bank located on the left rear trim panel:

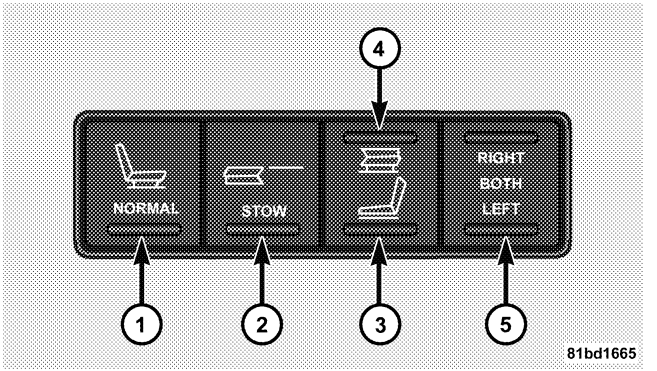

Rear Panel Power Switch Bank

1 — Open to Normal	4 — Fold Flat
2 — Stow	5 — Right/Left Seats
3 — Tailgate	5 — Both Seats

NOTE:

- Disconnect the center shoulder belt from the small buckle and lower the head restraints before attempting to fold/stow the power third row seats.
- To abort seat operation while seat is in motion, press a different seat position selector switch to stop the seat. Once the seat stops moving, then the desired position can be selected.
- The third row power seat system includes obstacle detection for safe operation. When the system detects an obstacle, the motors will stop and reverse the motion a short distance to move the seat away from the obstacle. Should this occur, remove the obstacle and press the button again, for the desired position.

To Fold Third Row Seats Manually — If Equipped

1. Lower the head restraint to its full down position.
2. Pull release strap marked "1" located on the rear of the seat to lower the seatback.
3. Pull release strap marked "2" to release the anchors.

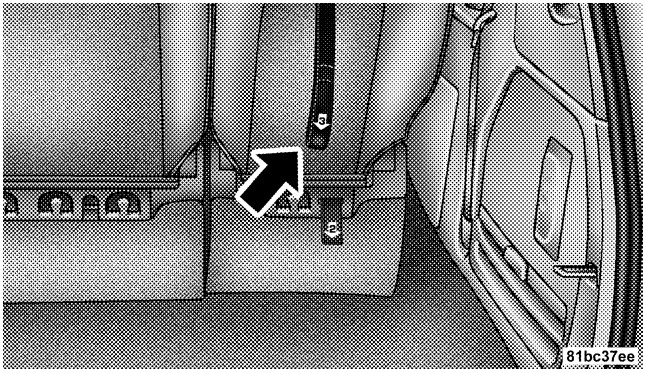

Folding Third Row Seat Strap

4. Pull release strap marked "3" and tumble the seat rearward into the storage bin.

To Unfold Third Row Seats

1. Pull up on the assist strap to lift the seat out of the storage bin and push the seat forward until the anchors latch.

2. Pull release strap marked “1” to unlock the recliner.

3. Pulling strap “3” releases the seatback to return to its full upright position.

4. Adjust the head restraint to the desired position.

WARNING!

In a collision, you or others in your vehicle could be injured if seats are not properly latched to their floor attachments. Always be sure the seats are fully latched.

Tailgate Mode

1. Pull release strap “2”, then pull release strap “3” to rotate the entire seat rearward.

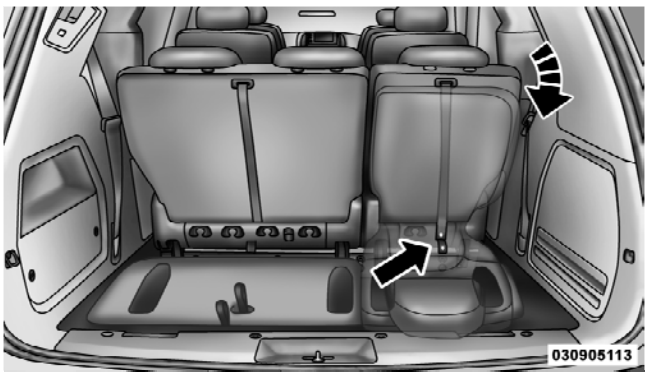

Tailgate Positioning Release Straps 2 and 3

2. To restore the seat to its upright position, lift up on the seatback and push forward until the anchors latch.

WARNING!

To avoid serious injury or death, NEVER operate the vehicle with occupants in the third row seat while in the tailgate mode.

DRIVER MEMORY SEAT — IF EQUIPPED

The Memory Buttons 1 and 2 on the driver's door panel can be programmed to recall the driver's seat, driver's outside mirror, adjustable brake and accelerator pedals, and radio station preset settings. Your Remote Keyless Entry (RKE) transmitters can also be programmed to recall the same positions when the UNLOCK button is pressed.

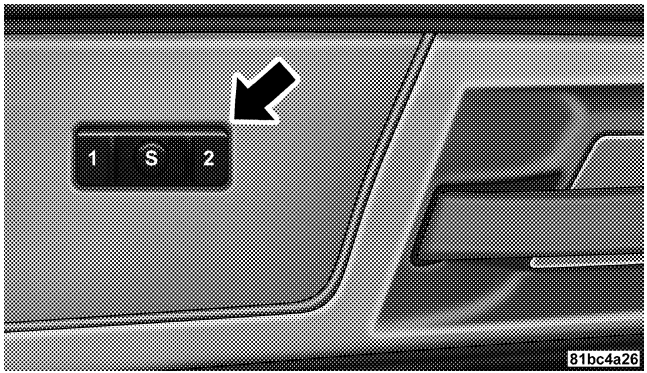

Driver Memory Switch

Your vehicle may have been delivered with two RKE transmitters. Only one RKE transmitter can be linked to each of the memory positions.

Setting Memory Positions and Linking RKE Transmitter to Memory

NOTE: Each time the SET (S) button and a numbered button (1 or 2) is pressed, you erase the memory settings for that button and store a new one.

1. Insert the ignition key and turn the ignition switch to the ON position.

2. Press the driver door MEMORY button number 1 if you are setting the memory for driver 1, or button number 2 if you are setting the memory for driver 2. The system will recall any stored settings. Wait for the system to complete the memory recall before continuing to Step 3.

3. Adjust the driver's seat, recliner, and driver's side-view mirror to the desired positions.

4. Adjust the brake and accelerator pedals to the desired positions.

5. Turn on the radio and set the radio station presets (up to 10 AM and 10 FM stations can be set).

6. Turn the ignition switch to the OFF position and remove the key.

7. Press and release the SET (S) button located on the driver's door.

8. Within five seconds, press and release MEMORY button 1 or 2 on the driver's door. The next step must be performed within 10 seconds if you desire to also use a RKE transmitter to recall memory positions.

9. Press and release the LOCK button on one of the RKE transmitters.

10. Insert the ignition key and turn the ignition switch to the ON position.

11. Select "Remote Linked to Memory" in the Electronic Vehicle Information Center (EVIC) and enter "Yes". Refer to "Electronic Vehicle Information Center (EVIC)/ Customer-Programmable Features" in "Understanding Your Instrument Panel" for further information.

12. Repeat the above steps to set the next Memory position using the other numbered Memory button or to link another RKE transmitter to memory.

Memory Position Recall

NOTE: The vehicle must be in PARK to recall memory positions. If a recall is attempted when the vehicle is not in PARK, a message will be displayed in the EVIC.

To recall the memory settings for driver one, press MEMORY button 1 on the driver's door or the UNLOCK button on the RKE transmitter linked to memory position 1.

To recall the memory setting for driver two, press MEMORY button 2 on the driver's door or the UNLOCK button on the RKE transmitter linked to Memory Position 2.

A recall can be cancelled by pressing any of the MEMORY buttons on the driver's door during a recall (S, 1, or 2). When a recall is cancelled, the driver's seat, driver's mirror, and the pedals stop moving. A delay of one second will occur before another recall can be selected.

To Disable RKE Transmitter Linked to Memory

1. Turn the ignition switch to the OFF position and remove the key.

2. Press and release MEMORY button 1. The system will recall any memory settings stored in position 1. Wait for the system to complete the memory recall before continuing to Step 3.

3. Press and release the memory SET (S) button located on the driver's door. A chime will sound signaling that you are in the memory set mode.

4. Within five seconds, press and release MEMORY button 1 on the driver's door. A chime will sound signaling to you that the driver memory has been set.

5. Within five seconds, press and release the UNLOCK button on the RKE transmitter. A chime will sound signaling to you that the RKE transmitter link has been successfully disabled.

To disable another RKE transmitter linked to either Memory Position, repeat Steps 1 to 5 for each RKE transmitter.

NOTE: Once programmed, all RKE transmitters linked to memory can be easily enabled or disabled at one time. Refer to "Electronic Vehicle Information Center (EVIC)/ Customer-Programmable Features" in "Understanding Your Instrument Panel" for further information.

Easy Entry/Exit Seat (Available with Memory Seat ONLY)

This feature provides automatic driver seat positioning to enhance driver mobility when entering and exiting the vehicle.

The distance the driver seat moves depends on where you have the driver seat positioned when you remove the key from the ignition switch.

- When you remove the key from the ignition switch, the driver seat will move about 2.4 in (60 mm) rearward if the driver seat position is greater than or equal to 2.7 in (67.7 mm) forward of the rear stop. The seat will return to its previously set position when you insert the key into the ignition switch and turn it out of the LOCK position.

- When you remove the key from the ignition switch the driver seat will move to a position 0.3 in (7.7 mm) forward of the rear stop if the driver seat position is between 0.9 – 2.7 in (22.7 – 67.7 mm) forward of the rear stop. The seat will return to its previously set position when you insert the key into the ignition switch and turn it out of the LOCK position.
- The Easy Entry/Easy Exit feature is disabled when the driver seat position is less than 0.9 in (22.7 mm) forward of the rear stop. At this position, there is no benefit to the driver by moving the seat for Easy Exit or Easy Entry.

Each stored memory setting will have an associated Easy Entry and Easy Exit Position.

NOTE: The Easy Entry/Easy Exit feature can be enabled or disabled through the programmable features in the Electronic Vehicle Information Center (EVIC). If your vehicle is not equipped with an EVIC, your dealership can activate/deactivate this feature for you. For details, refer to "Electronic Vehicle Information Center (EVIC)/ Customer-Programmable Features" in "Understanding Your Instrument Panel" for further information.

TO OPEN AND CLOSE THE HOOD

To open the hood, two latches must be released.

1. Pull the hood release lever located on the instrument panel, below the steering column.

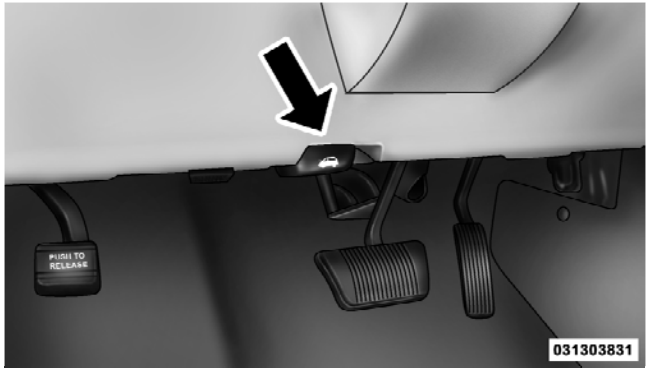

Hood Release

2. Move to the front of the vehicle and look inside the center of the hood opening. Locate, then push the safety catch lever to the right, while raising the hood at the same time.

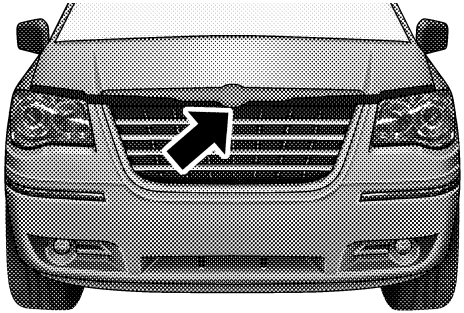

Safety Catch Location

Use the hood prop rod to secure the hood in the open position.

CAUTION!

To prevent possible damage, do not slam the hood to close it. Lower the hood until it is open approximately 12 in (30 cm) and then drop it. This should secure both latches. Never drive your vehicle unless the hood is fully closed, with both latches engaged.

WARNING!

Be sure the hood is fully latched before driving your vehicle. If the hood is not fully latched, it could open when the vehicle is in motion and block your vision. Failure to follow this warning could result in serious injury or death.

LIGHTS

All of the lights, except the Hazard Warning lights, headlight high beams and flash-to-pass, are controlled by switches to the left of the steering column on the instrument panel.

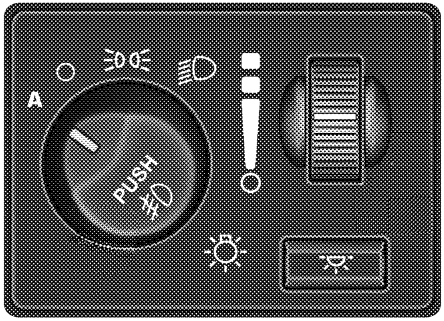

031407112

Headlight Switch With Halo Control Assembly

Interior Lighting

Interior lights are turned on when a door or liftgate is opened, the Remote Keyless Entry (RKE) transmitter is activated, or when the dimmer control is moved to the extreme top.

The interior lights will automatically turn off in approximately 10 minutes for the first activation and 90 seconds every activation thereafter until the engine is started, if one of the following occur:

- A door, sliding door or the liftgate is left open
- Any overhead reading light is left on

NOTE: The key must be out of the ignition switch or the ignition switch must be in the OFF position for this feature to operate.

Dome Light Positions

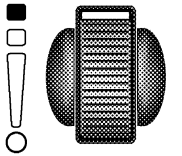

81bc85ef

Rotate the dimmer control completely upward to the second detent (extreme top position) to turn on the interior lights. The interior lights will remain on when the dimmer control is in this position.

Interior Lighting Defeat (Off)

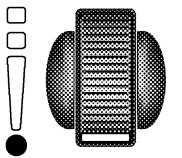

81bc85ec

Rotate the dimmer control to the off position (extreme bottom). The interior lights will remain off when the doors or liftgate are open.

Parade Mode (Daytime Brightness Feature)

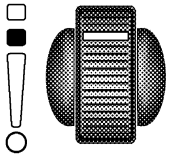

Rotate the dimmer control to the first detent. This feature brightens the odometer, radio and overhead displays when the parking lights or headlights are on.

Dimmer Control

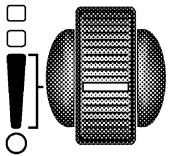

With the parking lights or headlights on, rotating the dimmer control for the interior lights on the instrument panel upward will increase the brightness of the instrument panel lights.

Halo Lights — If Equipped

Halo lights are strategically placed soft lighting that help to illuminate specific areas to aid the occupants in locating specific features while driving at night.

To activate the Halo lights, push in the Halo switch control knob. Pressing the switch control knob in a second time will turn the Halo lights off.

Parking Lights

Turn the headlight switch knob to the first detent to turn the parking lights on. This also turns on all instrument panel lighting.

Headlights

Turn the headlight switch knob to the second detent to turn the headlights and parking lights on. This also turns on all instrument panel lighting.

To change the brightness of the instrument panel lights, rotate the dimmer control up or down.

Automatic Headlights — If Equipped

This system automatically turns your headlights on or off based on ambient light levels. To turn the system on, turn the headlight switch to the extreme counterclockwise position aligning the indicator with the **"A"** on the headlight switch. When the system is on, the Headlight Time Delay feature is also on. This means your headlights will stay on for up to 90 seconds after you turn the ignition switch OFF. To turn the Automatic System off, turn the headlight switch clockwise to the **"O"** off position.

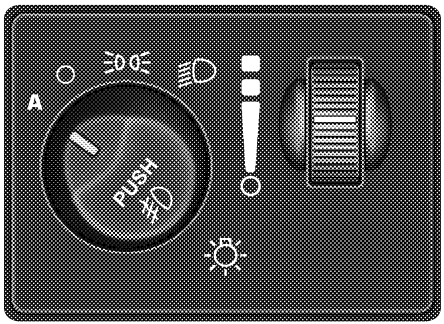

81bc85ed

Automatic Headlights

NOTE: The engine must be running before the headlights will come on in the Automatic mode.

Headlights On With Wipers — If Equipped

When your headlights are in the Automatic mode and the engine is running, the headlights will automatically turn on when the wiper system is also turned on. Headlights on when windshield wipers are on may be found on vehicles equipped with an automatic headlight system. Refer to "Electronic Vehicle Information Center (EVIC)/ Customer-Programmable Features" in "Understanding Your Instrument Panel" for further information.

Headlight Delay — If Equipped

This feature provides the safety of headlight illumination for up to 90 seconds after exiting your vehicle.

To activate the delay feature, turn OFF the ignition switch while the headlights are still on. Then turn off the headlights within 45 seconds. The 90 second delay interval begins when headlight switch is turned off. If the headlights or parking lights are turned back on or the ignition switch is turned ON, the delay will be cancelled.

When exiting the vehicle the driver can choose to have the headlights remain on for 30, 60, or 90 seconds or not remain on. To change the timer setting, see your authorized dealer.

The headlight delay time is programmable on vehicles equipped with an EVIC. Refer to "Electronic Vehicle Information Center (EVIC)/Customer-Programmable Features" in "Understanding Your Instrument Panel" for further information.

If the headlights are turned off before the ignition, they will turn off in the normal manner.

NOTE: The headlights must be turned off within 45 seconds of turning the ignition OFF to activate this feature.

Lights-On Reminder

If the headlights or the parking lights are left on, or if the dimmer control is in the extreme top position after the ignition switch is turned OFF, a chime will sound when the driver's door is opened.

Daytime Running Lights (Canada/Fleet Vehicles Only)

The headlights on your vehicle will illuminate when the engine is started and the transmission is in any gear except PARK. This provides a constant lights on condition until the ignition is turned OFF. The lights illuminate at less than 50% of normal intensity. If the parking brake is applied, the Daytime Running Lights (DRL) will turn off. Also, if a turn signal is activated, the DRL lamp on the same side of the vehicle will turn off for the duration of the turn signal activation. Once the turn signal is no longer active, the DRL lamp will illuminate.

Front Fog Lights — If Equipped

To activate the front fog lights, turn on the parking lights or the low beam headlights and push in the headlight switch control knob. Pressing the headlight switch control knob in a second time will turn the front fog lights off.

Battery Protection

This feature provides battery protection to avoid wearing down the battery if the headlights, parking lights, or front fog lights are left on for extended periods of time when the ignition switch is in the LOCK position. After eight minutes of the ignition switch being in the LOCK position and the headlight switch in any position other than OFF or AUTO, the lights will turn off automatically until the next cycle of the ignition switch or headlight switch.

The battery protection feature will be disabled if the ignition switch is turned to any other position other than LOCK during the three minute delay.

Multifunction Lever

The multifunction lever is located on the left side of the steering column.

The multifunction lever controls the:

- Turn Signals
- Headlight Beams Low/High
- Flash-To-Pass (Optical Horn)
- Front and Rear Wipers — Washer Functions

Turn Signals

Move the multifunction lever up or down and the arrows on each side of the instrument cluster flash to show proper operation of the front and rear turn signal lights.

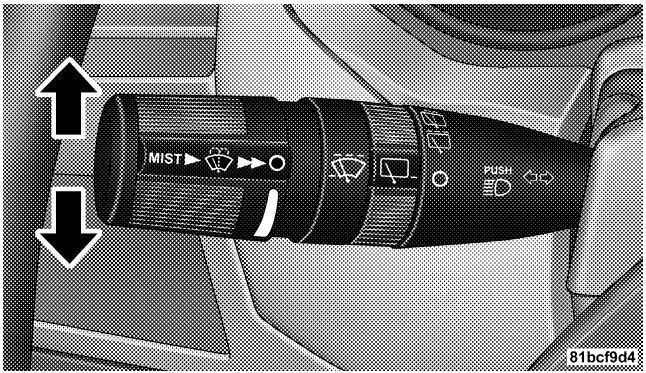

Turn Signals

NOTE: If either light remains on and does not flash, or there is a very fast flash rate, check for a defective outside light bulb. If an indicator fails to light when the lever is moved, it would suggest that the indicator bulb is defective.

Lane Change Assist

Tap the lever up or down once, without moving beyond the detent, and the turn signal (right or left) will flash three times then automatically turn off.

Turn Signal Warning

If the vehicle electronics sense that the vehicle has traveled at over 18 mph (29 km/h) for approximately 1 mile (1.6 km) with the turn signals on, a chime will sound to alert the driver.

High/Low Beam Switch

When the headlights are turned on, pushing the multifunction lever toward the instrument panel will switch from low beams to high beams. Pulling back to the neutral position returns the headlights to the low beam operation.

Flash-To-Pass

You can signal another vehicle with your headlights by lightly pulling the multifunction lever toward you. This will turn on the high beam headlights until the lever is released.

SmartBeam™ — If Equipped

The SmartBeam™ system provides increased forward lighting at night by automating high beam control through the use of a digital camera mounted on the inside rearview mirror. This camera detects vehicle specific light and automatically switches from high beams to low beams until the approaching vehicle is out of view.

To Activate

1. Select “Automatic High Beams — ON” through the EVIC. Refer to “Electronic Vehicle Information Center (EVIC)/Customer-Programmable Features” in “Understanding Your Instrument Panel” for further information.

2. Rotate the headlight switch counterclockwise to the AUTO (A) position.

3. Push the multifunction lever away from you to switch the headlights to the high beam position. Refer to "Multifunction Lever" in this section for further information.

NOTE: This system will not activate until the vehicle is at, or above, 25 mph (40 km/h).

To Deactivate

Perform either of the following steps to deactivate the SmartBeam™ system.

1. Pull the multifunction lever toward you to switch the headlights from the high beam to the low beam position.

2. Rotate the headlight switch clockwise from the AUTO (A) to the on position.

NOTE: Broken, muddy or obstructed headlights and taillights of vehicles in the field of view will cause headlights to remain on longer (closer to the vehicle). Also, dirt, film and other obstructions on the windshield or camera lens will cause the system to function improperly.

WINDSHIELD WIPERS AND WASHERS

The wipers and washers are operated by a switch within the multifunction lever. Rotate the end of the multifunction lever to select the desired wiper speed.

NOTE: Always remove any buildup of snow that prevents the windshield wiper blades from returning to the off position. If the windshield wiper switch is turned off and the blades cannot return to the off position, damage to the wiper motor may occur.

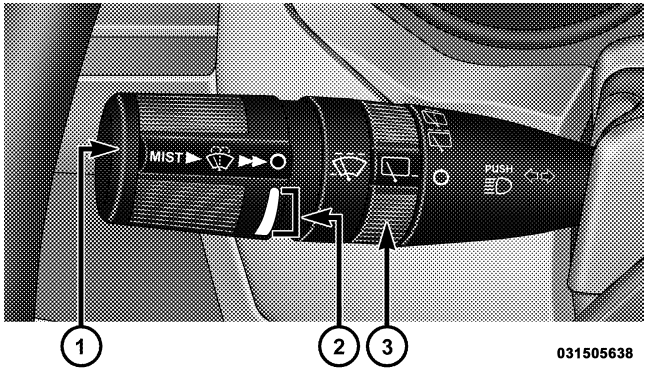

Washer And Wiper Controls

1 — Front Mist/Washer
2 — Wiper Speeds
3 — Rear Wiper/Washer

1. Mist, Front Wiper and Washer

Press the end of the multifunction lever inward to the first detent and release to clear the windshield. Pressing the multifunction lever inward to the second detent will cause the washers to spray for a maximum of 10 seconds, or until the multifunction lever is released, and the wipers will cycle three times.

NOTE:

- If the multifunction lever is pressed while in the delay range, the wipers will operate for several seconds after the multifunction lever is released, and then resume the intermittent interval previously selected.
- If the multifunction lever is pressed while in the off position, the wipers will operate for approximately two or three wipe cycles and automatically turn off.

2. Intermittent, Low and High Speed Wipers

Use the intermittent wipers when weather conditions make a single wiping cycle, with a variable pause between cycles, desirable. Rotate the end of the multifunction lever to the first detent position, then turn the end of the multifunction lever to select the desired delay interval. The delay can be regulated from approximately two seconds, to a maximum of 20 seconds between cycles. The time delay will be doubled if the vehicle speed is less than 10 mph (16 km/h).

Low-speed is achieved by rotating the multifunction lever past the intermittent settings, to the first detent.

High-speed is achieved by rotating the multifunction lever past the intermittent settings, to the second detent.

3. Rear Wiper and Washer

Rotating the rotary ring to the first detent activates the rear intermittent wipers. To activate the washers, rotate the rotary ring fully forward and the washers will spray until the ring is released, and then resume the intermittent interval.

NOTE: Rear window wipers function in the intermittent wiper speed only.

WARNING!

Sudden loss of visibility through the windshield could lead to an accident. You might not see other vehicles or other obstacles. To avoid sudden icing of the windshield during freezing weather, warm the windshield with defroster before and during windshield washer use.

Rain Sensing Wipers — If Equipped

This feature senses moisture on the windshield and automatically activates the wipers for the driver. This feature is especially useful for road splash or overspray from the windshield washers of the vehicle ahead. Rotate the end of the multifunction lever to one of the five intermittent wiper sensitivity settings to activate this feature.

The sensitivity of the system is adjustable from the multifunction lever. Wiper sensitivity position 3 has been calibrated for best overall wiping sensitivity. If the operator desires more wiping sensitivity, they may select sensitivity positions 4 or 5. If the operator desires less wiping sensitivity, they may select sensitivity positions 2 or 1. Place the multifunction lever in the OFF position when not using the system.

NOTE:

- The Rain Sensing feature will not operate when the wiper speed is in the low or high position.
- The Rain Sensing feature may not function properly when ice or dried saltwater is present on the windshield.
- Use of Rain-X® or products containing wax or silicone may reduce rain sensor performance.
- The Rain Sensing feature can be turned on and off through the EVIC (if equipped). Refer to “Electronic Vehicle Information Center (EVIC)/Personal Settings (Customer-Programmable Features)” in “Understanding Your Instrument Panel” for further information.

The Rain Sensing system has protective features for the wiper blades and arms. It will not operate under the following conditions:

- **Low Temperature Wipe Inhibit** — The Rain Sensing feature will not operate when the ignition is first switched ON, and the vehicle is stationary, and the outside temperature is below 32°F (0°C), unless the wiper control on the multifunction lever is moved, or the vehicle speed becomes greater than 0 mph (0 km/h), or the outside temperature rises above freezing.
- **Neutral Wipe Inhibit** — The Rain Sensing feature will not operate when the ignition is ON, and the transmission shift lever is in the NEUTRAL position, and the vehicle speed is less than 5 mph (8 km/h), unless the wiper control on the multifunction lever is moved or the shift lever is moved out of the NEUTRAL position.
- **Remote Start Mode Inhibit** — On vehicles equipped with Remote Starting system, Rain Sensing wipers are not operational when the vehicle is in the remote start mode. Once the operator is in the vehicle and has placed the ignition switch in the RUN position, rain sensing wiper operation can resume, if it has been selected, and no other inhibit conditions (mentioned previously) exist.

TILT STEERING COLUMN

This feature allows you to tilt the steering column upward or downward. The tilt control lever is located on the steering column, below the steering wheel.

To tilt the column, push the lever downward to the unlocked position. Move the steering column up or down, as desired. Pull the lever upward to the locked position to lock the steering column firmly in place.

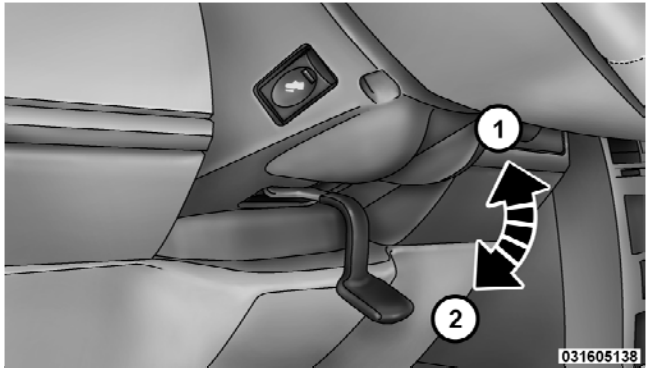

Tilt Steering Column Lever

1 — Locked Position
2 — Unlocked Position

WARNING!

Do not adjust the steering column while driving. Adjusting the steering column while driving or driving with the steering column unlocked, could cause the driver to lose control of the vehicle. Be sure the steering column is locked before driving your vehicle. Failure to follow this warning may result in serious injury or death.

ADJUSTABLE PEDALS — IF EQUIPPED

This feature allows both the brake and accelerator pedals to move toward, or away, from the driver to provide improved position with the steering wheel. The adjustable pedal system is designed to allow a greater range of driver comfort for steering wheel tilt and seat positions. The switch is located on the left side of the steering column.

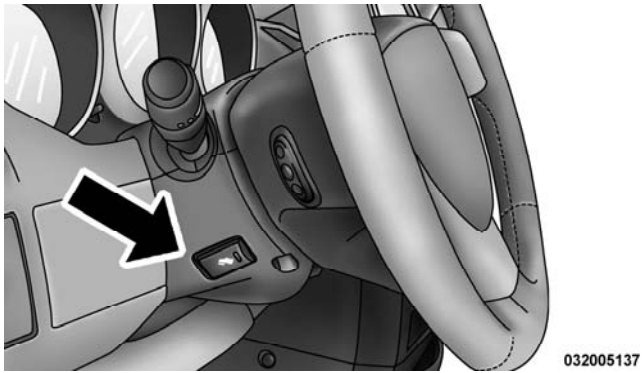

Adjustable Pedal Switch

Press the button forward to move the pedals forward (toward the front of the vehicle).

Press the button rearward to move the pedals rearward (toward the driver).

- The pedals can be adjusted with the ignition OFF.
- The pedals **cannot** be adjusted when the vehicle is in REVERSE or when the Electronic Speed Control System is on. The following messages will be displayed on vehicles equipped with the Electronic Vehicle Information System (EVIC) if the pedals are attempted to be adjusted when the system is locked out ("Adjustable Pedal Disabled — Cruise Control Engaged" or "Adjustable Pedal Disabled — Vehicle In Reverse".

CAUTION!

Do not place any article under the adjustable pedals or impede its ability to move, as it may cause damage to the pedal controls. Pedal travel may become limited if movement is stopped by an obstruction in the adjustable pedal's path.

WARNING!

Do not adjust the pedals while the vehicle is moving. You could lose control and have an accident. Always adjust the pedals while the vehicle is parked.

ELECTRONIC SPEED CONTROL — IF EQUIPPED

When engaged, Electronic Speed Control takes over the accelerator operation at speeds greater than 25 mph (40 km/h).

81bc4c2c

Electronic Speed Control Lever

NOTE: In order to ensure proper operation, the Electronic Speed Control System has been designed to shut down if multiple Speed Control functions are operated at the same time. If this occurs, the Electronic Speed Control

System can be reactivated by pushing the Electronic Speed Control ON/OFF button and resetting the desired vehicle set speed.

To Activate

Push the ON/OFF button (located in the end of the lever) once, and the cruise indicator light (located in the message window of the odometer) will illuminate, showing that the Electronic Speed Control system is on. To turn the Electronic Speed Control system off, push the ON/OFF button a second time, and both the Electronic Speed Control system and indicator will turn off.

WARNING!

Leaving the Electronic Speed Control system on when not in use is dangerous. You could accidently set the system or cause it to go faster than you want. You could lose control and have an accident. Always leave the Electronic Speed Control system off when you are not using it.

To Set At A Desired Speed

Turn the Electronic Speed Control ON. When the vehicle has reached the desired speed, press the SET lever downward and then release. Lift your foot off the accelerator and the vehicle will operate at the selected speed.

Deactivating Electronic Speed Control

A soft tap on the brake pedal or pulling the Electronic Speed Control lever (CANCEL) toward you will deactivate the Electronic Speed Control without erasing the set speed memory. Pushing the ON/OFF button to the OFF position or turning OFF the ignition erases the set speed memory.

Resuming Speed

To resume a previously set speed, raise the Electronic Speed Control lever (RESUME ACCEL) upward, and release. Resume can be used at any speed above 25 mph (40 km/h).

Varying The Speed Setting

When the Electronic Speed Control is set, you can increase speed by pushing up and holding the RESUME ACCEL lever. If the lever is continually held in the RESUME ACCEL position, the set speed will continue to increase until the lever is released, then the new set speed will be established.

Tapping the Electronic Speed Control lever to RESUME ACCEL once will result in a 1 mph (1.6 km/h) speed increase. Each time the lever is tapped speed increases, so tapping the lever three times will increase speed by 3 mph (4.8 km/h), etc.

To decrease speed while Electronic Speed Control is set, push down and hold the Electronic Speed Control lever in SET DECEL. If the lever is continually held in the SET DECEL position, the set speed will continue to decrease until the lever is released. Release the lever when the desired speed is reached, and a new set speed will be established.

Tapping the Electronic Speed Control lever to SET DECEL once will result in a 1 mph (1.6 km/h) speed decrease. Each time the lever is tapped, speed decreases.

Accelerating To Pass

Press the accelerator as you normally would. When the pedal is released, the vehicle will return to the set speed.

NOTE: The Electronic Speed Control system maintains speed up and down hills. A slight speed change on moderate hills is normal.

Your vehicle may experience a downshift (automatic transmissions only) while climbing uphill or descending downhill. This downshift is necessary to maintain vehicle set speed.

On steep hills, a greater speed loss or gain may occur, so it may be preferable to drive without Electronic Speed Control.

WARNING!

Electronic Speed Control can be dangerous where the system cannot maintain a constant speed. Your vehicle could go too fast for the conditions, and you could lose control. An accident could be the result. Do not use Electronic Speed Control in heavy traffic or on roads that are winding, icy, snow-covered, or slippery.

PARKSENSE® REAR PARK ASSIST — IF EQUIPPED

The ParkSense® Rear Park Assist system provides visual and audible indications of the distance between the rear fascia and the detected obstacle when backing up. Refer to ParkSense® System Usage Precautions for limitations of this system and recommendations.

ParkSense® will remember the last system state (enabled or disabled) from the last ignition cycle when the ignition is changed to the RUN/ON position.

ParkSense® can be active only when the shift lever is in REVERSE. If ParkSense® is enabled at this shift lever position, the system will be active until the vehicle speed is increased to approximately 11 mph (18 km/h) or above. The system will be active again if the vehicle speed is decreased to speeds less than approximately 10 mph (16 km/h).

ParkSense® Sensors

The ParkSense® sensors, located in the rear fascia/bumper, monitor the area behind the vehicle that is within the sensors' field of view.

The sensors can detect obstacles from approximately 12 in (30 cm) up to 79 in (200 cm) from the rear fascia/bumper in the horizontal direction, depending on the location, type and orientation of the obstacle.

ParkSense® Warning Display

The ParkSense® Warning screen will only be displayed if Sound and Display is selected from the Customer-Programmable Features section of the Electronic Vehicle Information Center (EVIC). Refer to "Electronic Vehicle Information Center (EVIC)/Personal Settings (Customer-Programmable Features)" in "Understanding Your Instrument Panel" for further information.

The ParkSense® Warning Display is located in the Instrument cluster's EVIC display. It provides both visual and audible warnings to indicate the distance between the rear fascia/bumper and the detected obstacle.

ParkSense® Warning Display

ParkSense® Display

When the vehicle is in REVERSE, the warning display will turn ON indicating the system status.

Park Assist ON

Park Assist Disabled

The system will indicate a detected obstacle by showing three solid arcs and will produce a ½ second tone. As the vehicle moves closer to the object the EVIC display will show fewer arcs and the sound tone will change from slow, to fast, to continuous.

Slow Tone

Fast Tone

Continuous Tone

The vehicle is close to the obstacle when the EVIC display shows one flashing arc and sounds a continuous tone.

The following chart shows the warning display operation when the system is detecting an obstacle:

WARNING DISPLAY DISTANCES

DISPLAY MESSAGE	OBSTACLE DISTANCE FROM:		ARC's	AUDIBLE SIGNAL
	REAR CORNERS	REAR CENTER		
Park Assist ON			None	None
Warning Object Detected		78.7 in (200 cm)	3 Solid	Yes, 1/2 second
Warning Object Detected		39.3 in (100 cm)	3 Flashing	Slow Tone
Warning Object Detected	27.5 in (70 cm)	31.4 in (80 cm)	3 Flashing	Slow Tone
Warning Object Detected	25.5 in (65 cm)	25.5 in (65 cm)	2 Flashing	Fast Tone
Warning Object Detected	19.7 in (50 cm)	19.7 in (50 cm)	2 Flashing	Fast Tone
Warning Object Detected	15.7 in (40 cm)	15.7 in (40 cm)	2 Flashing	Fast Tone
Warning Object Detected	11.8 in (30 cm)	11.8 in (30 cm)	1 Flashing	Continuous Tone
NOTE: ParkSense® will MUTE the radio, if on, when the system is sounding an audio tone.				

Enabling/Disabling ParkSense®

You can turn ParkSense® ON or OFF through the EVIC. The available choices are: OFF, Sound Only, or Sound and Display. Refer to "Electronic Vehicle Information Center (EVIC)/Personal Settings (Customer-Programmable Features)" in "Understanding Your Instrument Panel" for further information.

As soon as the system is disabled, the instrument cluster will display the "PARK ASSIST DISABLED" message,

refer to “Electronic Vehicle Information Center (EVIC)” in “Understanding Your Instrument Panel” for further information. When the shift lever is moved to REVERSE and the system is disabled, the EVIC will display the “PARK ASSIST DISABLED” message for as long as the vehicle is in REVERSE.

Service ParkSense®

When the ParkSense® system is malfunctioning, the instrument cluster will actuate a single chime, once per ignition cycle, and it will display the “SERVICE PARK ASSIST SYSTEM” message. Refer to “Electronic Vehicle Information Center (EVIC)” in “Understanding Your Instrument Panel” for further information. When the shift lever is moved to REVERSE and the system has detected a faulted condition, the EVIC will display the “SERVICE PARK ASSIST SYSTEM” message for as long as the vehicle is in REVERSE. Under this condition ParkSense® will not operate.

If “SERVICE PARK ASSIST SYSTEM” appears in the Electronic Vehicle Information Center (EVIC) after making sure the rear fascia/bumper is free from snow, ice, mud, dirt and debris, see your authorized dealer.

Cleaning ParkSense®

Clean the ParkSense® sensors with water, car wash soap and a soft cloth. Do not use rough or hard cloths. Do not scratch or poke the sensors. Otherwise, you could damage the sensors.

ParkSense® System Usage Precautions

NOTE:

- Ensure that the rear bumper is free of dirt and debris to keep the ParkSense® Rear Park Assist system operating properly.
- Jackhammers, large trucks, and other vibrations could affect the performance of the ParkSense® system.

- When you turn ParkSense® off, the instrument cluster will display "PARK ASSIST DISABLED." Furthermore, once you turn ParkSense® off, it remains off until you turn it on again, even if you cycle the ignition key.
- When you move the shift lever to the REVERSE position and ParkSense® is turned off, the instrument cluster will display "PARK ASSIST DISABLED" message for as long as the vehicle is in REVERSE.
- ParkSense®, when on, will MUTE the radio when it is sounding a tone.
- If a ParkSense® system malfunction occurs, a single chime will sound once per ignition cycle. In addition, the Electronic Vehicle Information Center (EVIC) will display "SERVICE PARK ASSIST SYSTEM". If this occurs making sure the rear fascia/bumper is free from snow, ice, mud, dirt and debris, see your authorized dealer.
- Clean the ParkSense® sensors regularly, taking care not to scratch or damage them. The sensors must not be covered with ice, snow, slush, mud, dirt, or debris. Failure to do so can result in the ParkSense® system not working properly. The ParkSense® system might not detect an obstacle behind the fascia/bumper, or it could provide a false indication that an obstacle is behind the fascia/bumper.
- Objects must not be within 12 in (30 cm) from the rear fascia/bumper while driving the vehicle. Failure to do so can result in the system misinterpreting a close object as a sensor problem, causing the "SERVICE PARK ASSIST SYSTEM" message to be displayed in the instrument cluster.

CAUTION!

- **ParkSense® is only a parking aid and it is unable to recognize every obstacle, including small obstacles. Parking curbs might be temporarily detected or not detected at all. Obstacles located above or below the ParkSense® sensors will not be detected when they are in close proximity.**
- **The vehicle must be driven slowly when using ParkSense® to be able to stop in time when the obstacle is detected. It is recommended that the driver looks over his/her shoulder when using ParkSense®.**

WARNING!

- **Drivers must be careful when backing up even when using the ParkSense® Rear Park Assist system. Always check carefully behind your vehicle, look behind you, and be sure to check for pedestrians, animals, other vehicles, obstructions, and blind spots before backing up. You are responsible for safety and must continue to pay attention to your surroundings. Failure to do so can result in serious injury or death.**

(Continued)

WARNING! (Continued)

- **Before using the ParkSense® Rear Park Assist system, it is strongly recommended that the ball mount and hitch ball assembly is disconnected from the vehicle when the vehicle is not used for towing. Failure to do so can result in injury or damage to vehicles or obstacles because the hitch ball will be much closer to the obstacle than the rear fascia when the warning display turns on the single flashing arc and sounds the continuous tone. Also, the sensors could detect the ball mount and hitch ball assembly, depending on its size and shape, giving a false indication that an obstacle is behind the vehicle.**

PARKVIEW® REAR BACK UP CAMERA — IF EQUIPPED

Your vehicle may be equipped with the ParkView® Rear Back Up Camera that allows you to see an on-screen image of the rear of your vehicle whenever the shift lever is put into REVERSE. The image will be displayed on the Navigation/Multimedia radio display screen. The ParkView® camera is located in the light bar over the rear license plate.

WARNING!

Drivers must be careful when backing up even when using the ParkView® Rear Back Up Camera. Always check carefully behind your vehicle, and be sure to check for pedestrians, animals, other vehicles, obstructions, or blind spots before backing up. You are responsible for the safety of your surroundings and must continue to pay attention while backing up. Failure to do so can result in serious injury or death.

CAUTION!

- **To avoid vehicle damage, ParkView® should only be used as a parking aid. The camera is unable to view every obstacle or object in your drive path.**
- **To avoid vehicle damage, the vehicle must be driven slowly when using ParkView® to be able to stop in time when an obstacle is seen. It is recommended that the driver look frequently over his/her shoulder when using ParkView®.**

NOTE: If snow, ice, mud, or anything else builds up on the camera lens, clean the lens, rinse with water, and dry with a soft cloth. Do not cover the lens.

Turning ParkView® On or Off — With Navigation/Multimedia Radio

1. Press the “menu” hard key.

2. Select ″system setup″ soft key.

3. Press the “camera setup” soft key.

4. Enable or disable the rear camera feature by selecting “enable rear camera in reverse” soft key.

5. Press the “save” soft key.

6. When the vehicle is shifted into REVERSE, an image of the rear of the vehicle will appear with a caution note to “check entire surroundings” displayed across the top of the screen. After five seconds this note will disappear.

7. When the vehicle is shifted out of REVERSE, the rear camera mode is exited and the navigation or audio screen appears again.

Turning ParkView® On or Off — Without Navigation/Multimedia Radio

1. Press the “menu” hard key.

2. Select “system setup” soft key.

3. Enable or disable the rear camera feature by selecting “enable rear camera in reverse” soft key.

4. When the vehicle is shifted into REVERSE, an image of the rear of the vehicle will appear with a caution note to “check entire surroundings” displayed across the top of the screen. After five seconds this note will disappear.

5. When the vehicle is shifted out of REVERSE, the rear camera mode is exited and the audio screen appears again.

OVERHEAD CONSOLES

Front Overhead Console

Two versions of the overhead console are available. The base front overhead console model featured fixed incandescent courtesy/reading lights, flip-down sunglass storage and conversation mirror. The premium front overhead console model features a LED focused light that illuminates the instrument panel cupholders, Infrared Automatic Temperature Control Sensor (ATC equipped only), two swiveling LED lights, flip-down sunglass storage, conversation mirror, optional power sliding door switches and an optional power liftgate switch.

NOTE: Premium sunroof console models include all of above except sunglass storage.

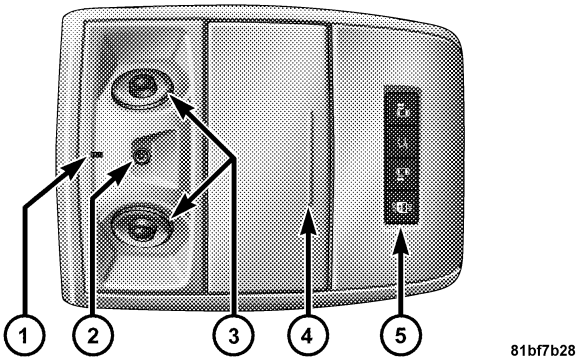

Front Premium Overhead Console Features

1 — Cupholder LED
2 — ATC Sensor
3 — Interior Lights
4 — Storage/Mirror
5 — Switch Bank

Courtesy/Interior Lighting

At the forward end of the console are two courtesy lights (standard dome light has two buttons). The lights turn on

when a front door, a sliding door or the liftgate is opened. If your vehicle is equipped with Remote Keyless Entry (RKE) the lights will also turn on when the UNLOCK button on the RKE transmitter is pressed.

The courtesy lights also function as reading lights. Press in on each lens to turn these lights on while inside the vehicle. Press a second time to turn each light off. You may adjust the direction of these lights by pressing the outside ring, which is identified with four directional arrows (LED lamps only).

The area around the instrument panel cupholders is also illuminated from a light in the overhead console (premium console only). This light is turned on when the headlight switch is on, and will adjust in brightness when the dimmer control is rotated up or down.

Sunglass Storage (non-sunroof only)
At the rear of the front overhead console, a compartment is provided for the storage of two pairs of sunglasses. From the closed position, press the door over-travel latch to open the compartment. The door will slowly rotate to the full open position. From this position, the door can be fully closed or, by rotating upward about 3/4 of the way and releasing, positioned for conversation mirror use.

From the "conversation mirror" position, the door can only be closed. To return to the full open position, the door must first be closed and then opened by pressing the over-travel latch again to release.

NOTE: The front overhead console supplied with factory sunroof, incorporates a sunroof switch.

Rear Overhead Consoles — If Equipped
The rear overhead storage system is available in two versions: with or without sunroof.

An additional LED at the front of the rear console shines down on the front foot-well area while in courtesy mode, for added convenience.

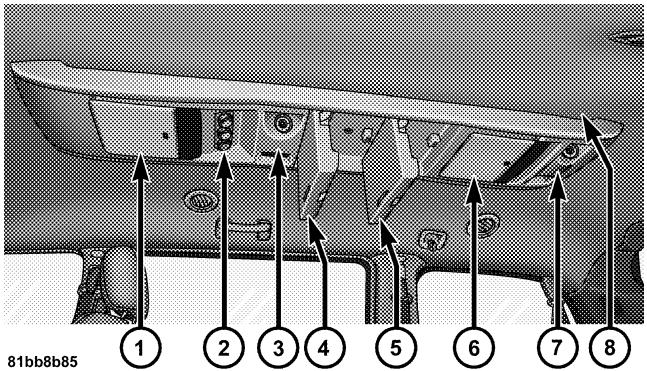

Overhead Compartment Features

1 — DVD [1]
2 — Rear HVAC
3 — Interior Lights
4 — Storage
5 — Storage
6 — DVD [1]
7 — Interior Lights
8 — Halo Lighting

[1] If equipped, otherwise storage.

Rear Courtesy/Reading Lights — If Equipped

The overhead console has two sets of courtesy lights. The lights turn on when a front door, a sliding door or the liftgate is opened. If your vehicle is equipped with Remote Keyless Entry (RKE) the lights will also turn on when the UNLOCK button on the RKE transmitter is pressed.

The courtesy lights also function as reading lights. Press in on each lens to turn these lights on while inside the vehicle. Press the lens a second time to turn each light off. You may adjust the direction of these lights by pressing the outside ring, which is identified with four directional arrows.

Rear Console Halo Lighting

The rear overhead console has recessed halo lighting around the perimeter of the console base. This feature provides additional lighting options while traveling and is controlled by the headlight switch. Refer to "Lights/ Halo Lights — If Equipped" in "Understanding the Features Of Your Vehicle" for further information.

GARAGE DOOR OPENER — IF EQUIPPED

HomeLink® replaces up to three remote controls (hand-held transmitters) that operate devices such as garage door openers, motorized gates, lighting or home security systems. The HomeLink® unit operates off your vehicle's battery.

The HomeLink® buttons that are located in the headliner or sun visor designate the three different HomeLink® channels.

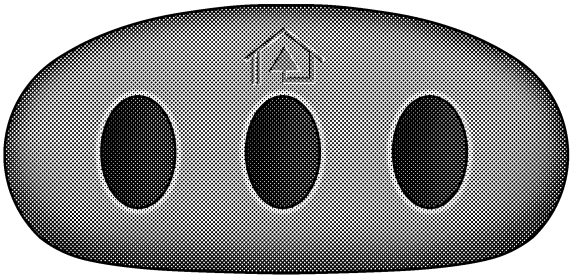

81cb44fe

HomeLink® Buttons

NOTE: HomeLink® is disabled when the Vehicle Security Alarm is active.

WARNING!

- **Your motorized door or gate will open and close while you are training the universal transceiver. Do not train the transceiver if people, pets or other objects are in the path of the door or gate. Only use this transceiver with a garage door opener that has a "stop and reverse" feature as required by Federal safety standards. This includes most garage door opener models manufactured after 1982. Do not use a garage door opener without these safety features. Call toll-free 1–800–355–3515 or, on the Internet at www.HomeLink.com for safety information or assistance.**
- **Vehicle exhaust contains carbon monoxide, a dangerous gas. Do not run your vehicle in the garage while training the transceiver. Exhaust gas can cause serious injury or death.**

Programming HomeLink®

Before You Begin

If you have not trained any of the HomeLink® buttons, erase all channels before you begin training.

To do this, press and hold the two outside buttons for up to 20 seconds until the red indicator flashes.

It is recommended that a new battery be placed in the handheld transmitter of the device that is being copied to HomeLink® for more efficient training and accurate transmission of the radio-frequency signal.

Your vehicle should be parked outside of the garage when programming.

Begin Programming

1. Turn the ignition switch to the ON/RUN position.

2. Hold the battery side of the handheld transmitter away from the HomeLink® button you wish to program.

Place the handheld transmitter 1 to 3 in (3 to 8 cm) away from the HomeLink® button you wish to program while keeping the indicator light in view.

3. Simultaneously press and hold both the chosen HomeLink® button and the handheld transmitter button until the HomeLink® indicator changes from a slow to a rapidly blinking light, then release both the HomeLink® and handheld transmitter buttons.

Watch for the HomeLink® indicator to change flash rates. When it changes, it is programmed. It may take up to 30 seconds or longer in rare cases. The garage door may open and close while you train.

NOTE:

- Some gate operators and garage door openers may require you to replace Step 3 with procedures noted in the "Gate Operator/Canadian Programming" section.
- After training a HomeLink® channel, if the garage door does not operate with HomeLink® and the garage door opener was manufactured after 1995, the garage door opener may have a rolling code. If so, proceed to Step 5 "Programming A Rolling Code System."

4. Press and hold the just-trained HomeLink® button and observe the indicator light.

If the indicator light stays on constantly, programming is complete and the garage door (or device) should activate when the HomeLink® button is pressed.

If the indicator light blinks rapidly for two seconds and then turns to a constant light, proceed to Step 5 "Programming A Rolling Code System."

5. Programming A Rolling Code System

At the garage door opener motor (in the garage), locate the "Learn" or "Training" button.

This can usually be found where the hanging antenna wire is attached to the garage door opener motor. It is NOT the button normally used to open and close the door.

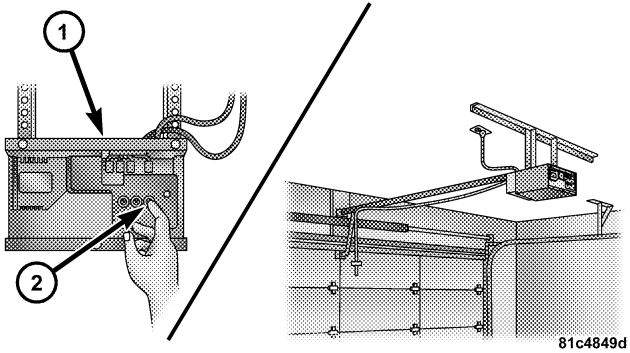

Training The Garage Door Opener

1 — Door Opener
2 — Training Button

6. Firmly press and release the LEARN or TRAINING button. The name and color of the button may vary by manufacturer.

NOTE: You have 30 seconds in which to initiate the next step after the LEARN button has been pressed.

7. Return to the vehicle and press the programmed HomeLink® button twice (holding the button for two seconds each time). If the device is plugged in and activates, programming is complete.

If the device does not activate, press the button a third time (for two seconds) to complete the training.

If you have any problems, or require assistance, please call toll-free 1–800–355–3515 or, on the Internet at www.HomeLink.com for information or assistance.

To program the remaining two HomeLink® buttons, repeat each step for each remaining button. DO NOT erase the channels.

Using HomeLink®

To operate, press and release the programmed HomeLink® button. Activation will now occur for the trained device (i.e., garage door opener, gate operator, security system, entry door lock, home/office lighting, etc.,). The handheld transmitter of the device may also be used at any time.

Reprogramming a Single HomeLink® Button

To reprogram a channel that has been previously trained, follow these steps:

1. Turn the ignition switch to the ON/RUN position.

2. Press and hold the desired HomeLink® button until the indicator light begins to flash after 20 seconds. **Do not release the button.**

3. **Without releasing the button,** proceed with Programming HomeLink® Step 2 and follow all remaining steps.

Gate Operator/Canadian Programming

Canadian radio frequency laws require transmitter signals to time-out (or quit) after several seconds of transmission – which may not be long enough for HomeLink® to pick up the signal during programming. Similar to this Canadian law, some U.S. gate operators are designed to time-out in the same manner.

It may be helpful to unplug the device during the cycling process to prevent possible overheating of the garage door or gate motor.

If you are having difficulties programming a garage door opener or a gate operator, replace "Programming HomeLink®" Step 3, with the following:

3. Continue to press and hold the HomeLink® button, while you press and release ("cycle"), your handheld transmitter every two seconds until HomeLink® has

successfully accepted the frequency signal. The indicator light will flash slowly and then rapidly when fully trained.

If you unplugged the device for training, plug it back in at this time.

Then proceed with Step 4 under "Programming HomeLink®," earlier in this section.

Security

It is advised to erase all channels before you sell or turn in your vehicle.

To do this, press and hold the two outside buttons for 20 seconds until the red indicator flashes. Note that all channels will be erased. Individual channels cannot be erased.

The HomeLink® Universal Transceiver is disabled when the Vehicle Security Alarm is active.

Troubleshooting Tips

If you are having trouble programming HomeLink®, here are some of the most common solutions:

- Replace the battery in the original transmitter.
- Press the LEARN button on the Garage Door Opener to complete the training for a Rolling Code.
- Did you unplug the device for training, and remember to plug it back in?

If you have any problems, or require assistance, please call toll-free 1–800–355–3515 or, on the Internet at www.HomeLink.com for information or assistance.

General Information

This device complies with FCC rules Part 15 and Industry Canada RSS-210. Operation is subject to the following two conditions:

1. This device may not cause harmful interference.

2. This device must accept any interference that may be received including interference that may cause undesired operation.

NOTE:

- The transmitter has been tested and it complies with FCC and IC rules. Changes or modifications not expressly approved by the party responsible for compliance could void the user's authority to operate the device.
- The term IC before the certification/registration number only signifies that Industry Canada technical specifications were met.

POWER SUNROOF — IF EQUIPPED

The power sunroof control switch is located in the front overhead console.

The sunroof panel tilts upward at the rear for ventilation or slides rearward under the roof.

Power Sunroof Operation

Opening the Sunroof Manually

Press the switch rearward and hold, and the sunroof will open automatically from any position. The sunroof will open fully, then stop automatically. During this operation, any release of the sunroof switch will stop the sunroof.

WARNING!

In an accident, there is greater risk of being thrown from a vehicle with an open sunroof. You could also be seriously injured or killed. Always fasten your seat belt properly and make sure all passengers are properly secured.

Closing the Sunroof Manually

To close the sunroof from an open or vent position, press and hold the switch forward. The sunroof will close fully and stop automatically. Release the switch to stop sunroof travel at any point.

Sunroof Sunshade Operation

The sunroof sunshade can be opened manually. However, the sunshade will open automatically as the sunroof opens.

NOTE: The sunshade cannot be closed if the sunroof is open.

WARNING!

Never leave children in a vehicle with the key in the ignition switch. Occupants, particularly unattended children, can become entrapped by the power sunroof while operating the power sunroof switch. Such entrapment may result in serious injury or death.

Express Open

Press the switch rearward and release, and the sunroof will open automatically from any position. The sunroof will open fully, then stop automatically. This is called "Express Open". During Express Open operation, any movement of the sunroof switch will stop the sunroof.

Express Vent

Press and release the "V" button, and the sunroof will automatically open to the vent position. This is called "Express Vent".

Express Close

Press the switch forward and release, and the sunroof will close automatically from any position. The sunroof will close fully, then stop automatically. This is called "Express Close". During Express Close operation, any movement of the sunroof switch will stop the sunroof.

WARNING!

Do not allow small children to operate the sunroof. Never allow your fingers, other body parts, or any object to project through the sunroof opening. Injury may result.

Ignition Off Operation

The power sunroof switch will remain active for 10 minutes after the ignition switch is turned OFF. Opening either front door will cancel this feature.

Auto-Express with Anti-Pinch Protection

During express closing, anytime an obstacle that restricts glass movement is detected, the motor will stop and reverse travel to avoid pinching the object.

Auto Express will stop and reverse travel up to three times in succession. After the third time, Auto Express will enter a manual operation mode. This allows the operator to manually control the power switch, in order to close or open the sunroof in case of a malfunction.

Wind Buffeting

Wind buffeting can be described as the perception of pressure on the ears or a helicopter-type sound in the ears. Your vehicle may exhibit wind buffeting with the windows down, or the sunroof (if equipped) in certain open or partially open positions. This is a normal occurrence and can be minimized. If the buffeting occurs with the rear windows open, open the front and rear windows together to minimize the buffeting. If the buffeting occurs

with the sunroof open, adjust the sunroof opening to minimize the buffeting or open any window.

Sunroof Maintenance

Use only a non-abrasive cleaner and a soft cloth to clean the glass panel.

ELECTRICAL POWER OUTLETS — IF EQUIPPED

Two 12 Volt (13 Amp) power outlets are located on the lower instrument panel, next to the open storage bin. The upper power outlet is controlled by the ignition switch and the lower power outlet is connected directly to the battery. The upper power outlet will also operate a conventional cigar lighter unit (if equipped with an optional Smoker's Package).

NOTE:

- To ensure proper operation a MOPAR® cigar knob and element must be used.
- Do not exceed the maximum power of 160 Watts (13 Amps) at 12 Volts. If the 160 Watt (13 Amp) power rating is exceeded the fuse protecting the system will need to be replaced.

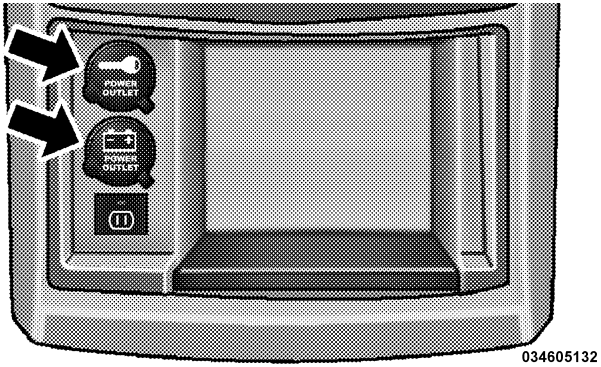

12 Volt Power Outlets

One outlet in the removable floor console shares a fuse with the lower outlet in the instrument panel and is also connected to the battery. Do not exceed a maximum power of 160 Watts (13 Amps) shared between the lower panel outlet and the removable floor console outlet.

The outlet in the rear quarter panel near the liftgate and the upper outlet in the instrument panel are both controlled by the ignition switch. Each of these outlets can support 160 Watts (13 Amps). Do not exceed 160 Watts (13 Amps) for each of these outlets.

The power outlets include tethered caps, labeled with a key or battery symbol indicating the power source. The power outlet, located on the lower instrument panel, is powered directly from the battery. Items plugged into this power outlet may discharge the battery and/or prevent the engine from starting.

WARNING!

To avoid serious injury or death:

- **Only devices designed for use in this type of outlet should be inserted into any 12 Volt outlet.**
- **Do not touch with wet hands.**
- **Close the lid when not in use and while driving the vehicle.**
- **If this outlet is mishandled, it may cause an electric shock and failure.**

CAUTION!

- **Many accessories that can be plugged in draw power from the vehicle's battery, even when not in use (i.e., cellular phones, etc.). Eventually, if plugged in long enough, the vehicle's battery will discharge sufficiently to degrade battery life and/or prevent the engine from starting.**
- **Accessories that draw higher power (i.e., coolers, vacuum cleaners, lights, etc.), will degrade the battery even more quickly. Only use these intermittently and with greater caution.**
- **After the use of high power draw accessories, or long periods of the vehicle not being started (with accessories still plugged in), the vehicle must be driven a sufficient length of time to allow the alternator to recharge the vehicle's battery.**

(Continued)

CAUTION! (Continued)

- **Power outlets are designed for accessory plugs only. Do not hang any type of accessory or accessory bracket from the plug. Improper use of the power outlet can cause damage.**

POWER INVERTER — IF EQUIPPED

A 110 Volt, 150 Watt inverter outlet (if equipped) converts DC current to AC current, and is located on the left rear trim panel immediately behind the second row left passenger seat. This outlet can power cellular phones, electronics and other low power devices requiring power up to 150 Watts. Certain high-end video games, such as Playstation3 and XBox360 will exceed this power limit, as will most power tools.

The power inverter is designed with built-in overload protection. If the power rating of 150 Watts is exceeded, the power inverter will automatically shut down. Once the electrical device has been removed from the outlet the inverter should automatically reset. If the power rating exceeds approximately 170 Watts, the power inverter may have to be reset manually. To reset the inverter manually press the power inverter button OFF and ON. To avoid overloading the circuit, check the power ratings on electrical devices prior to using the inverter.

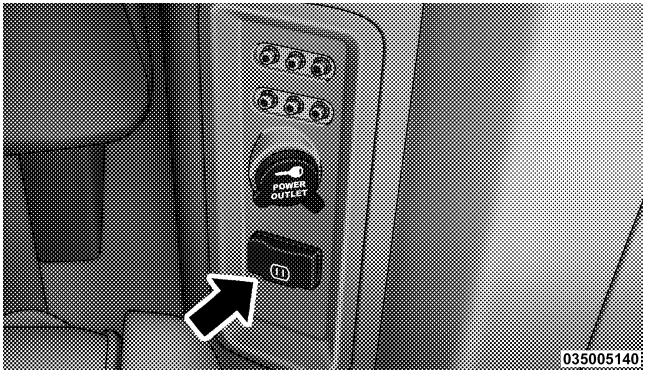

Power Inverter Outlet

The power inverter switch is located near the center of the instrument panel below the two 12 Volt power outlets.

To turn on the power outlet, press the switch once. Press the switch a second time to turn the power outlet off.

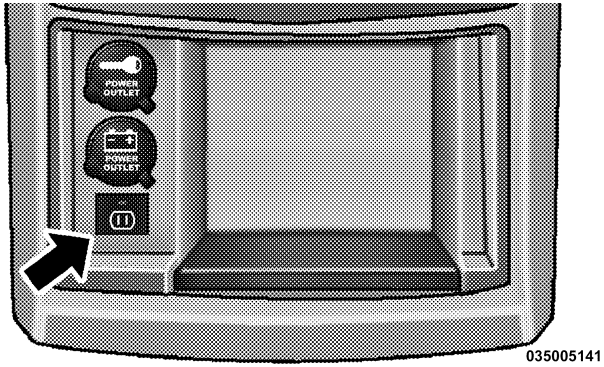

Power Inverter Switch

CUPHOLDERS

There are nine cupholders in the interior. Two cupholders in the center front instrument panel, four in the floor consoles and three more are located in the third row quarter trim panel.

All liners are removable for cleaning. Pull the flexible liner from the cupholder drawer or tray starting at one edge for easy removal. Refer to “Cleaning The Instrument Panel Cupholders” in “Maintaining Your Vehicle” for further information.

Instrument Panel Cupholders

The instrument panel cupholders are located in a pull-out drawer just above the lower storage bin.

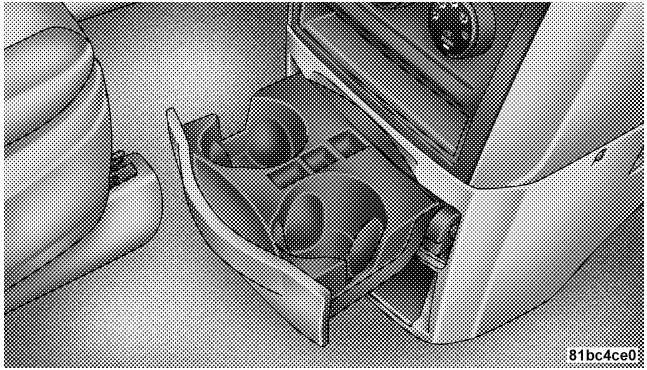

Front Cupholders

Pull the drawer out firmly until it stops, and place the container to be held in either one of the cupholder wells. The cupholders are designed to accommodate a wide variety of container types and sizes. Press down on the container to engage the cupholder retention features.

Interior Bottle Holders

There are four bottle holders located in the interior. One bottle holder is molded into each front interior door trim panels, and one bottle holder is molded into each side sliding interior door trim panel. Each holder accommodates up to a 20 oz (.6 L) plastic bottle.

WARNING!

If containers of hot liquid are placed in the bottle holder, they can spill when the door is closed, burning the occupants. Be careful when closing the doors to avoid injury.

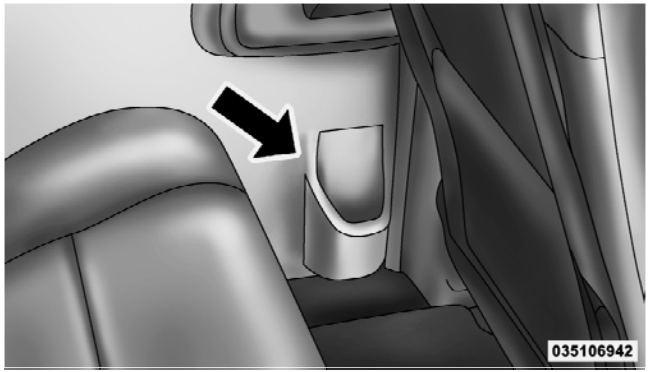

Interior Bottle Holder

Two outboard mesh pockets are on intermediate seating. The mesh pockets are flexible enough to hold juice boxes, toys, games or MP3 players, etc.

Smoker's Package Kit — If Equipped

With the optional authorized dealer-installed Smoker's Package Kit, a removable ash receiver is inserted into one of the two cupholders in the center front instrument panel. To install the ash receiver, align the receiver so the thumb grip on the lid is facing rearward. Press the ash receiver into either of the cup wells to secure. Pull upward on the ash receiver to remove for cleaning and/or storage.

The left rear trim panel cupholder is designed to accommodate a second ash receiver, if desired.

STORAGE

Glove Compartments

Upper Glove Compartment

To open the upper compartment, press inward on the release button (2). The door will spring open about 1 in (2.54 cm). Manually lift the front edge of the door upward, until fully opened, and the detent is engaged.

To close the compartment door, push firmly downward on the door's surface to release the detent and latch the door closed.

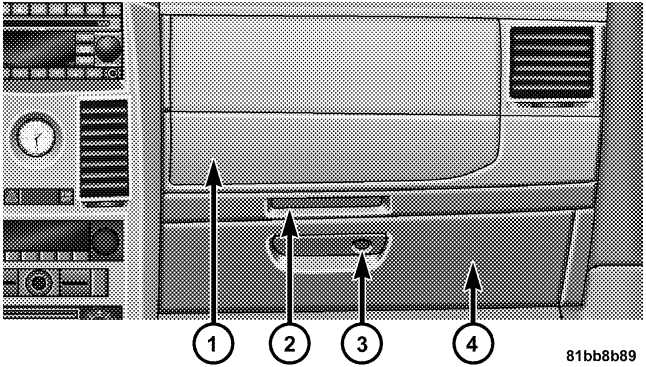

Glove Compartment Features

1 — Upper Compartment	3 — Lower Latch/Lock
2 — Upper Latch	4 — Lower Compartment

Lower Glove Compartment

To open the lower compartment, pull out on the release handle (3). The lower compartment handle is also equipped with a lock (3).

Door Trim Panel Storage

Front Door Storage

Both interior front door panels have multiple pockets for storage.

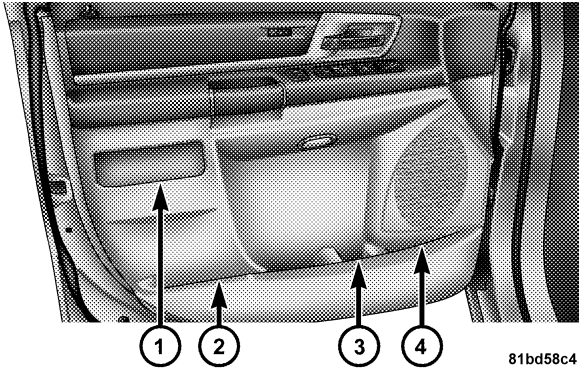

Front Door Storage Features

1 — Storage Pocket	3 — Bottle Holder
2 — Map Pocket	4 — Map Pocket

WARNING!

If containers of hot liquid are placed in the bottle holder, they can spill when the door is closed, burning the occupants. Be careful when closing the doors to avoid injury.

Driver Seatback Storage — If Equipped

The drivers seatback has a primary storage pocket on all models and an optional secondary mesh pocket.

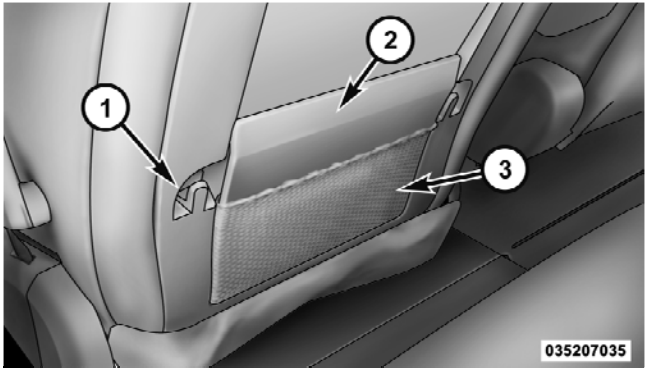

Driver's Seatback Storage

1 — Bag Holder
2 — Standard Pocket
3 — Mesh Pocket

Umbrella Holder

An umbrella holder has been conveniently molded into the left front door entry scuff molding.

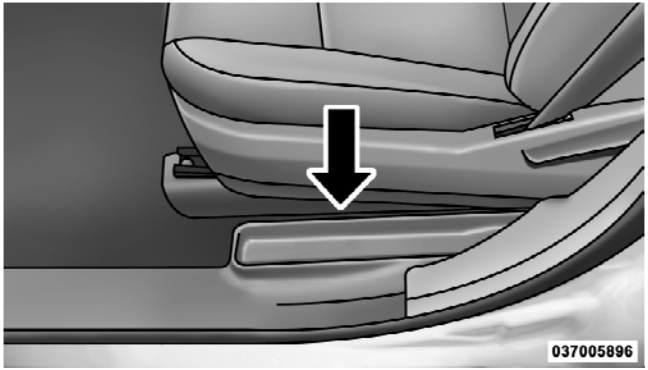

Umbrella Holder

Second Row Floor Storage Bins

The area below the floor covers, located in front of the second row seats, is available for storage.

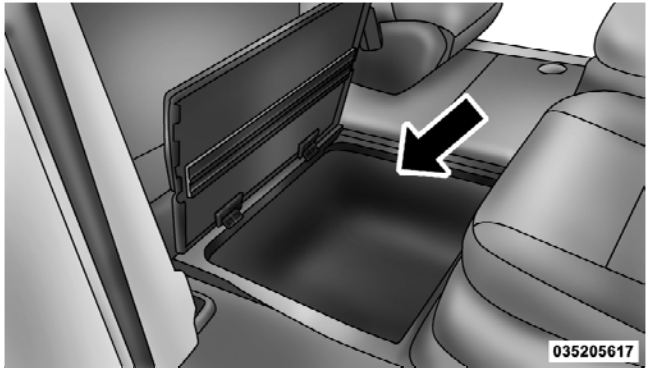

Storage Bin Cover Lock Release

Pull up on the storage bin latch to open the cover. Slide the storage bin locking mechanism to the "unlocked" position to allow greater access to the storage bin.

CAUTION!

The storage bin cover must lay flat and be locked to avoid damage from contact with the front seat tracks, which have minimal clearance to the cover.

WARNING!

In an accident, serious injury could result if the seat storage bin covers are not properly latched.

- **Do not drive the vehicle with the storage bin covers open.**
- **Keep the storage bin covers closed and latched while the vehicle is in motion.**
- **Do not operate the storage bin covers while the vehicle is in motion.**
- **Do not use a storage bin latch as a tie down.**

Storage Bin Safety Warning

Carefully follow these warnings to help prevent personal injury or damage to your vehicle:

WARNING!

- **Always close the storage bin covers when your vehicle is unattended.**
- **Do not allow children to have access to the second row seat storage bins. Once in the storage bin, young children may not be able to escape. If trapped in the storage bin, children can die from suffocation or heat stroke.**
- **In an accident, serious injury could result if the seat storage bin covers are not properly latched.**
- **Do not drive the vehicle with the storage bin covers open. Keep the storage bin covers closed and latched while the vehicle is in motion.**

(Continued)

WARNING! (Continued)

- **Do not operate the storage bin covers while the vehicle is in motion.**
- **Do not use a storage bin latch as a tie down.**

CAUTION!

The storage bin cover must be flat and locked to avoid damage from contact with the front seat tracks, which have minimal clearance to the cover.

Seat Storage Bin Cover Emergency Release Lever

As a security measure, your vehicle may be built with a Storage Bin Cover Emergency Release is built into the storage bin cover latching mechanism.

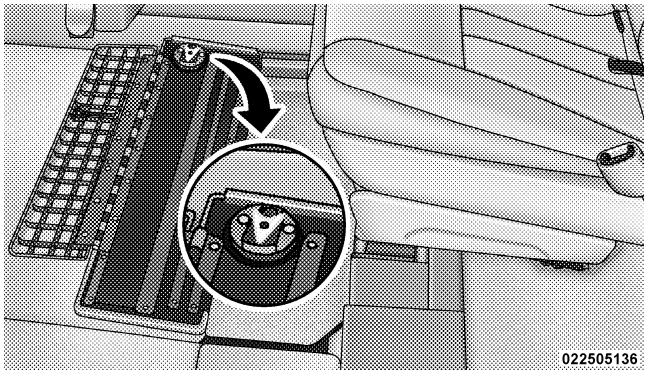

Storage Bin Cover Emergency Release Lever

NOTE: In the event of an individual being locked inside the storage bin, the storage bin cover can be opened from inside of the bin by pushing on the glow-in-the-dark lever attached to the storage bin cover latching mechanism.

Center And Rear Overhead Console Storage — If Equipped

The overhead storage system comes in several options.

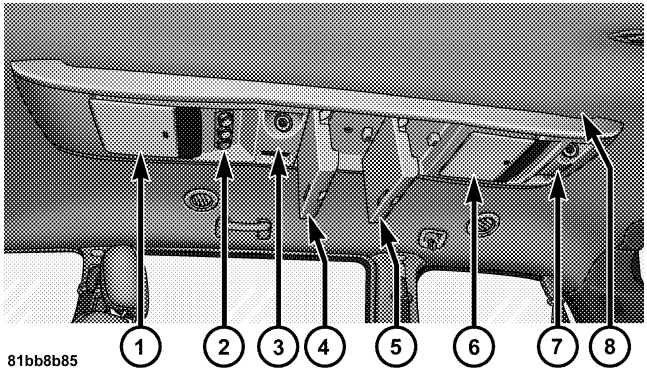

Overhead Console Features

1 — DVD [1]	5 — Storage
2 — Rear HVAC	6 — DVD [1]
3 — Courtesy Lights	7 — Courtesy Lights
4 — Storage	8 — Halo Lighting

[1] If equipped, otherwise storage.

Coat Hooks

Coat hooks are located along the headliner for the second and third row seating positions. The coat hook load limit is 10 lbs (4.5 kg). Exceeding the recommended load limit can cause the coat hooks to break or disengage from the vehicle.

Cargo Area Storage

The liftgate sill plate has a raised line with the statement “Load To This Line”. This line indicates how far rearward cargo can be placed without interfering with liftgate closing.

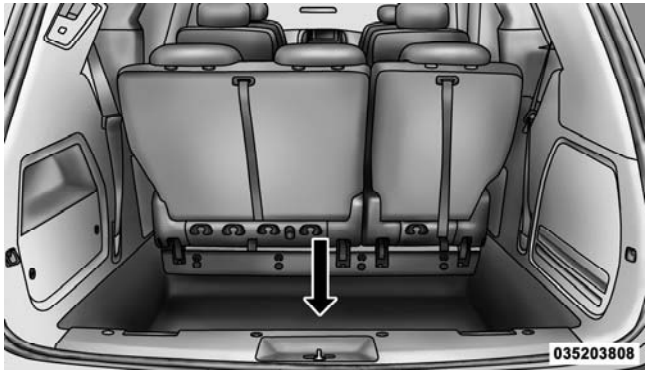

Rear Cargo Area Loading Limit

NOTE: With all rear seats stowed or removed, 4 x 8 foot sheets of building material will fit on the vehicle floor with the liftgate closed. The front seats must be moved slightly forward of the rearmost position.

CONSOLE FEATURES

There are two consoles available: Basic and Premium.

Basic Console

Basic Console features consist of the following:

- The basic console profile allows vehicle occupants to easily pass through the first row to the second.
- Four cupholders accept up to extra large size beverage cups or 20 oz (.6 L) plastic bottles. Cupholders are dishwasher safe for cleaning.
- The cupholders are removable to access a large storage bin.
- The basic console is removable from the vehicle for additional floor space by removing the cap and clip at the console base.

To Remove The Basic Floor Console

1. Remove the front anchor cup plug and clip.

2. Slide the console base forward while lifting slightly to clear the rear load floor hook.

3. Remove the console.

To Reinstall The Basic Floor Console

1. Position the console at a slight angle (front slightly higher than the rear).

2. Slide the console rearward into the floor bracket/hook.

3. Align the console until the front anchor cup plug hole is centered on the winch hole.

4. Reinstall the clip first and then while pushing downward on the console with slight pressure, reinstall the cover plug.

5. Pull up on the console to be sure it is firmly latched.

WARNING!

In an accident, serious injury could result if the removable floor console is not properly installed. Always be sure the removable floor console is fully latched.

Premium Console — If Equipped

The three-compartment console with sliding storage bin, sliding upper tray with storage and large console storage bin offers multiple configurations.

- Four cupholders with dishwasher safe liners for cleaning. The cupholders can accept plastic bottles, large cups or mugs with handles.
- Top tray storage
- Upper storage bin can hold nine regular or 18 thin CDs or other items

- Large console center storage will store headphones for the available rear DVD entertainment system or other items
- 12 Volt DC power outlet provides continuous power inside the console for cell phones or other electronics.
- Rear occupant accessible
- Multiple adjustments
- Removable from vehicle for additional floor space.

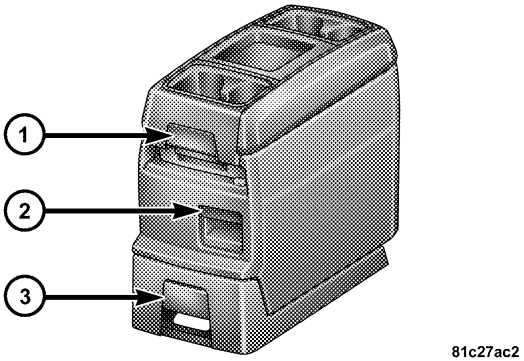

Premium Console Features

1 — Top Release
2 — Center Release
3 — Console Release

The top and center console sections slide forward and rearward to provide added user comfort. A one-piece cup

holder insert for both cavities can easily be removed for cleaning. The cupholders will also accommodate large size cups and 20 oz (.6 L) bottles.

Position 1 shows the console closed with four cupholders and a convenient storage tray.

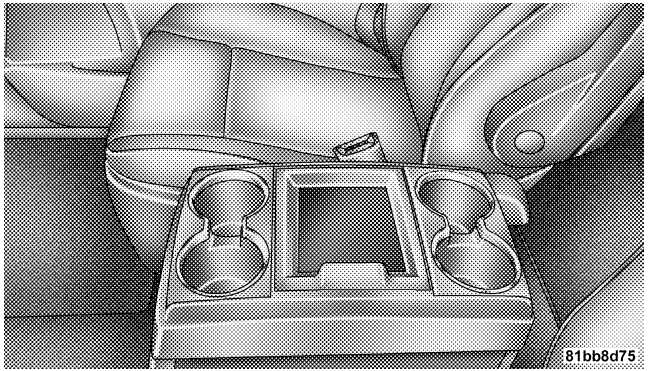

Console Position 1

Position 2 shows the raised storage tray revealing a large storage area below.

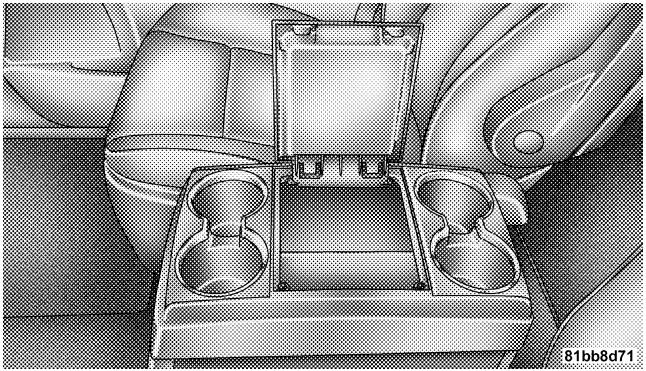

Console Position 2

Dual Storage Bins

Position 3 shows the top portion of the console in a rearward position. This is accomplished by lifting the upper most latch at the front of the console. This provides

easy access to the storage area below and provides two of the four cupholders for the second row passengers.

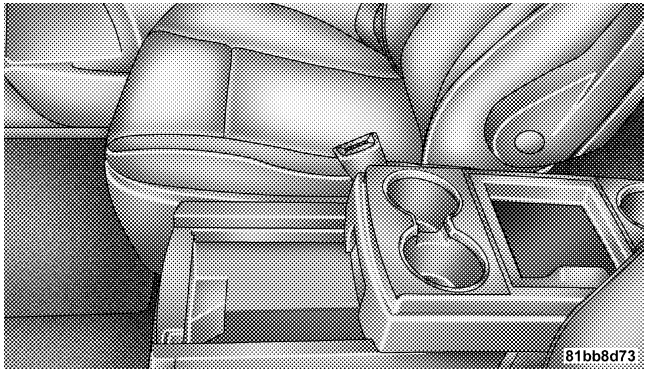

Console Position 3

Position 4 shows the complete console in its rearmost position. Again, lifting second latch handle at the front of the console, allows complete access to a lower storage bin and provides additional cupholders for rear passengers.

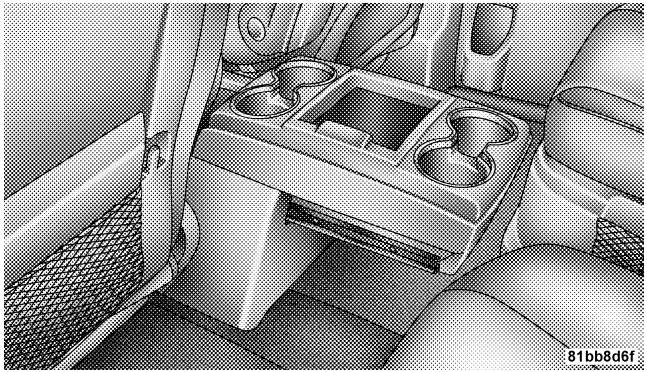

Console Position 4

To Remove The Premium Floor Console

1. Pull up on the bottom release handle in the front of the console.

2. Lift the rear of the console up several inches/centimeters.

3. Pull rearward to disengage from floor and remove console.

To reinstall the console:

1. Position the console at a slight angle (rear slightly higher than the front).

2. Slide the console forward into the floor bracket.

3. Rotate the rear of the console down until it is resting on the floor bracket.

4. Push down on the rear of the console until it is seated in the rear floor bracket.

5. Pull up on the console to be sure it is firmly latched.

WARNING!

In an accident, serious injury could result if the removable floor console is not properly installed. Always be sure the removable floor console is fully latched.

REAR WINDOW FEATURES

Rear Window Defroster

The rear window defroster button is located on the climate control (Mode) knob. Press this button to turn on the rear window defroster and the heated outside mirrors (if equipped). An indicator in the button will illuminate when the rear window defroster is on. The rear window defroster automatically turns off after approximately 10 minutes. For an additional five minutes of operation, press the button a second time.

NOTE:

- You can turn off the heated mirror feature at anytime by pressing the rear window defroster switch a second time.
- To prevent excessive battery drain, use the rear window defroster only when the engine is operating.

CAUTION!

Failure to follow these cautions can cause damage to the heating elements:

- **Use care when washing the inside of the rear window. Do not use abrasive window cleaners on the interior surface of the window. Use a soft cloth and a mild washing solution, wiping parallel to the heating elements. Labels can be peeled off after soaking with warm water.**

(Continued)

CAUTION! (Continued)

- **Do not use scrapers, sharp instruments, or abrasive window cleaners on the interior surface of the window.**
- **Keep all objects a safe distance from the window.**

LOAD-LEVELING SYSTEM

The automatic load-leveling system will provide a level riding vehicle under most passenger and cargo loading conditions.

A hydraulic pump contained within the shock absorbers raises the rear of the vehicle to the correct height. It takes approximately 1 mile (1.6 km) of driving for the leveling to complete depending on road surface conditions.

If the leveled vehicle is not moved for approximately 15 hours, the leveling system will bleed itself down. The vehicle must be driven to reset the system.

ROOF LUGGAGE RACK — IF EQUIPPED

The crossbars and side rails are designed to carry the weight on vehicles equipped with a luggage rack. The load must not exceed 150 lbs (68 kg), and should be uniformly distributed over the luggage rack crossbars.

Distribute cargo weight evenly on the roof rack crossbars. The roof rack does not increase the total load carrying capacity of the vehicle. Be sure the total load of cargo inside the vehicle plus that on the external rack does not exceed the maximum vehicle load capacity.

To move the crossbars, loosen the thumb screws located at the upper edge of each crossbar approximately six turns, then move the crossbar to the desired position, keeping the crossbars parallel to the rack frame. Once the crossbar is in place, retighten the thumb screws to lock the crossbar into position.

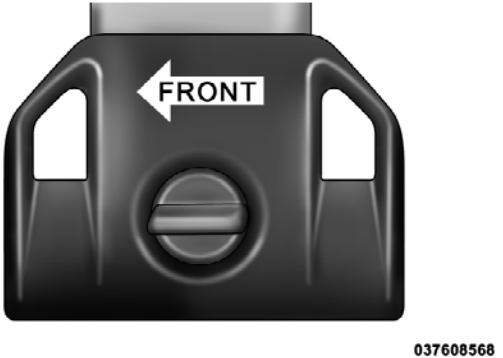

Crossbar

Attempt to move the crossbar again to ensure that it has properly locked into position.

NOTE: To help control wind noise when installing the crossbars ensure the embossed arrow is facing the front of the vehicle. When the crossbars are not in use, the front crossbar should be fastened just forward of the middle support and the rear crossbar should be fastened at the rearmost position of the side rails. This will help reduce the amount of wind noise when the crossbars are not in use.

The tie down holes on the crossbar ends should always be used to tie down the load. Check the straps frequently to be sure that the load remains securely attached.

CAUTION!

- **Crossbars should remain equally spaced or parallel at any luggage rack position for proper function. Noncompliance could result in damage to the luggage rack, cargo and/or vehicle.**

(Continued)

CAUTION! (Continued)

- **To avoid damage to the roof rack and vehicle, do not exceed the maximum roof rack load capacity of 150 lbs (68 kg). Always distribute heavy loads as evenly as possible and secure the load appropriately.**
- **Long loads which extend over the windshield, such as wood panels or surfboards, or loads with large frontal area should be secured to both the front and rear of the vehicle.**
- **Travel at reduced speeds and turn corners carefully when carrying large or heavy loads on the roof rack. Wind forces, due to natural causes or nearby truck traffic, can add sudden upward lift to a load. This is especially true on large flat loads and may result in damage to the cargo or your vehicle.**

WARNING!

Cargo must be securely tied before driving your vehicle. Improperly secured loads can fly off the vehicle, particularly at high speeds, resulting in personal injury or property damage. Follow the Roof Rack Cautions when carrying cargo on your roof rack.

SUN SCREENS — IF EQUIPPED

Sun screens are available for second and third row seating windows. The screens store in the sill trim panels, and the tops of the windows are equipped with hooks that the sun screens attach to when pulled out.

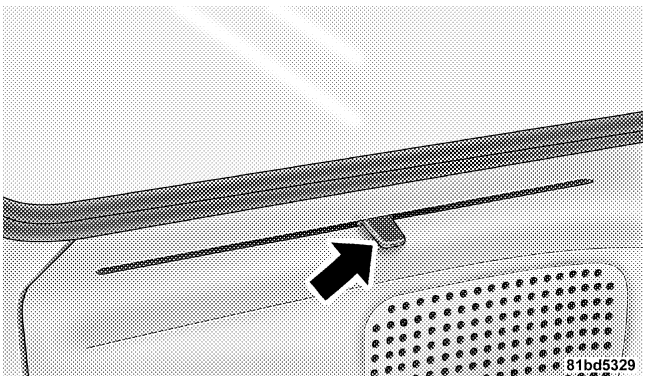

Sun Screen Retracted

Gently pull up on the tab to raise the sun screen. Continue pulling the sun screen until the tab is near the top of the window.

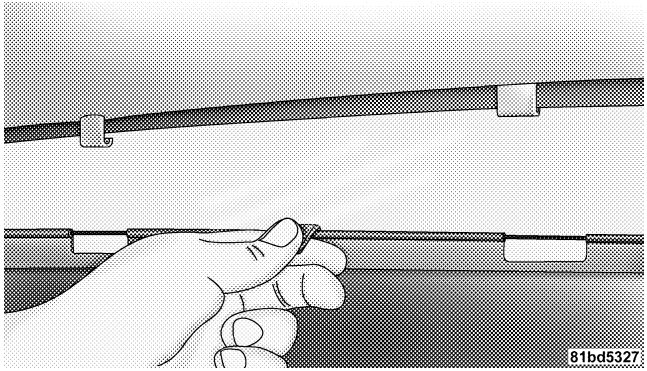

Sun Screen Attaching To Retainer Clips

Once the screen is completely to the top of the window, extend the top bar of the sun screen over the two hooks attached to the top of the window.

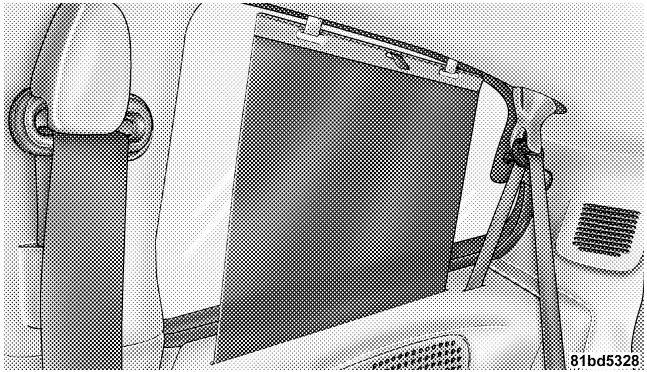

Sun Screen Extended

To lower the sun screen, gently lift the tab upward to disengage the hooks, and feed the screen back into the base sill.

UNDERSTANDING YOUR INSTRUMENT PANEL

CONTENTS

- Instrument Panel Features 231
- Instrument Cluster 232
- Instrument Cluster Descriptions 233
- Compass Mini-Trip Computer (CMTC) — If Equipped 247
  - CMTC Reset Buttons 247
  - Compass/Temperature Display 249
- Electronic Vehicle Information Center (EVIC) — If Equipped 250
  - Electronic Vehicle Information Center (EVIC) Displays 252
  - Trip Functions 254
  - Compass Display / ECO (Fuel Saver Mode) — If Equipped 256
  - Personal Settings (Customer-Programmable Features) 258
- Media Center 730N/430 (RER/RBZ) — AM/FM Stereo Radio And CD/DVD/HDD/NAV — If Equipped 263

- Operating Instructions — Voice Command System (VR) — If Equipped 263
- Operating Instructions — Uconnect™ Phone — If Equipped 263
- Clock Setting Procedure — RBZ Radio 263
- Clock Setting Procedure — RER Radio 265

■ Media Center 130 (RES) — AM/FM Stereo Radio With CD Player (MP3 AUX Jack). 267

- Operating Instructions — Radio Mode 268
- Operation Instructions — CD Mode For CD And MP3 Audio Play 271
- Notes On Playing MP3 Files 273
- Operation Instructions - Auxiliary Mode . . . 276

■ Media Center 130 (RES/RSC) — AM/FM Stereo Radio With CD Player (MP3 AUX Jack) And Sirius Radio 276

- Operating Instructions — Radio Mode 277
- Operation Instructions — CD Mode For CD And MP3 Audio Play 282
- Notes On Playing MP3 Files 284
- List Button (CD Mode For MP3 Play) 287
- Info Button (CD Mode For MP3 Play) 287

■ Universal Consumer Interface (UCI) 0.5 — If Equipped 289

- Connecting The iPod® 289
- Using This Feature 290
- Controlling The iPod® Using Radio Buttons 290

□ Play Mode 290
□ List Or Browse Mode 292
■ Uconnect™ Multimedia (Satellite Radio) — If Equipped (REN/RER/RBZ/RES Radios Only) 294
□ System Activation 294
□ Electronic Serial Number/Sirius Identification Number (ESN/SID) 294
□ Selecting Uconnect™ Multimedia (Satellite) Mode 295
□ Satellite Antenna 295
□ Reception Quality 295
□ Operating Instructions - Uconnect™ Multimedia (Satellite) Mode 296
□ Operating Instructions - Uconnect™ Phone (If Equipped) 298
■ Uconnect™ Multimedia (Sirius Backseat TV™) — If Equipped 298
■ Video Entertainment System (VES)™ — If Equipped 298
■ Remote Sound System Controls — If Equipped 300
□ Radio Operation 301
□ CD Player 301
■ CD/DVD Disc Maintenance 302
■ Radio Operation And Cellular Phones 302
■ Climate Controls 303
□ Manual Heating And Air Conditioning System — If Equipped 303

□ Three-Zone Temperature Control — If Equipped 307
□ Rear Manual Climate Control — If Equipped 309
□ Automatic Temperature Control (ATC) — If Equipped 312
□ Summer Operation 320
□ Winter Operation 321
□ Vacation/Storage 321
□ Window Fogging 321
□ Outside Air Intake 321
□ Operating Tips 322
□ A/C Air Filter— If Equipped 322

INSTRUMENT PANEL FEATURES

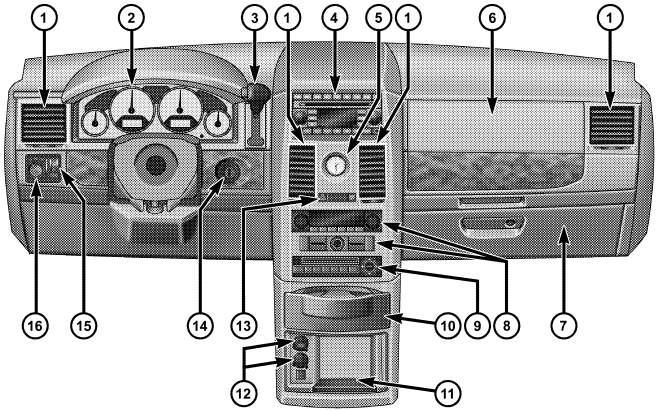

1 — Air Vents	5 — Analog Clock	9 — DVD – If Equipped	13 — Switch Bank
2 — Instrument Cluster	6 — Upper Glove Compartment	10 — Cup Holders	14 — Ignition Switch
3 — Shift Lever	7 — Lower Glove Compartment	11 — Storage Bin	15 — Dimmer Switch
4 — Radio	8 — Climate Controls	12 — Power Supply – 12V	16 — Headlight Switch

INSTRUMENT CLUSTER

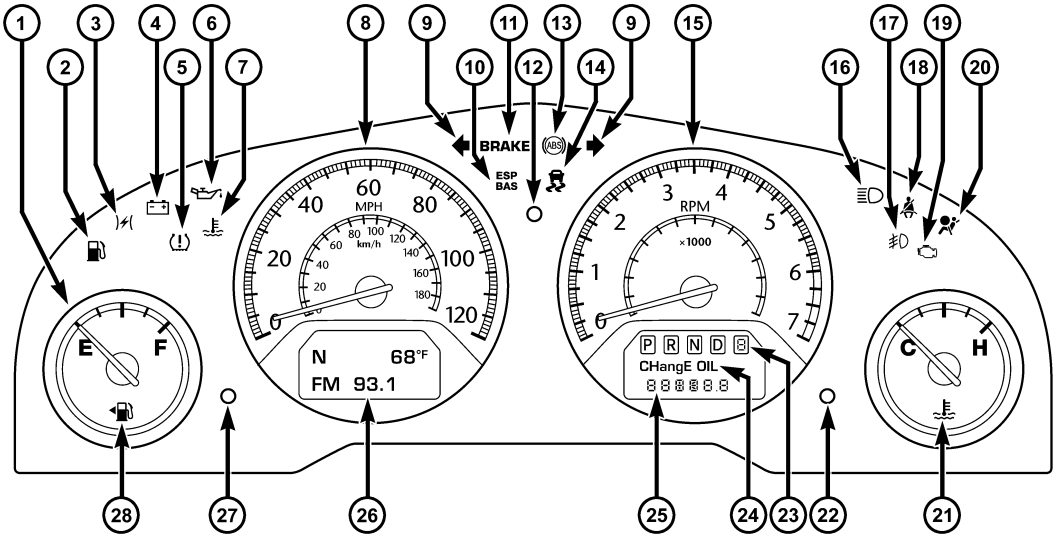

INSTRUMENT CLUSTER DESCRIPTIONS

1. Fuel Gauge

The pointer shows the level of fuel in the fuel tank when the ignition switch is in the ON position.

2. Low Fuel Light

When the fuel level reaches approximately 2.0 gal (7.8 L) this light will turn on, and remain on until fuel is added.

3. Electronic Throttle Control (ETC) Light

This light informs you of a problem with the Electronic Throttle Control (ETC) system. The light will come on when the ignition is first turned ON and remain on briefly as a bulb check. If the light does not come on during starting, have the system checked by an authorized dealer.

If a problem is detected, the light will come on while the engine is running. Cycle the ignition key when the vehicle has completely stopped and the shift lever is placed in the PARK position, the light should turn off.

If the light remains lit with the engine running, your vehicle will usually be drivable; however, see an authorized dealer for service as soon as possible. If the light is flashing when the engine is running, immediate service is required and you may experience reduced performance, an elevated/rough idle or engine stall and your vehicle may require towing.

4. Charging System Light

This light shows the status of the electrical charging system. The light should come on when the ignition switch is first turned ON and remain on briefly as a bulb check. If the light stays on or comes on while driving, turn off some of the vehicle's non-essential electrical devices or increase engine speed (if at idle). If the charging system light remains on, it means that the

vehicle is experiencing a problem with the charging system. Obtain SERVICE IMMEDIATELY. See an authorized dealer.

If jump starting is required, refer to “Jump Starting Procedures” in “What To Do In Emergencies”.

5. Tire Pressure Monitoring Telltale Light — If Equipped

Each tire, including the spare (if provided), should be checked monthly, when cold and inflated to the inflation pressure recommended by the vehicle manufacturer on the vehicle placard or tire inflation pressure label. (If your vehicle has tires of a different size than the size indicated on the vehicle placard or tire inflation pressure label, you should determine the proper tire inflation pressure for those tires.)

As an added safety feature, your vehicle has been equipped with a Tire Pressure Monitoring System (TPMS) that illuminates a low tire pressure telltale when one or more of your tires is significantly under-inflated. Accordingly, when the low tire pressure telltale illuminates, you should stop and check your tires as soon as possible, and inflate them to the proper pressure. Driving on a significantly under-inflated tire causes the tire to overheat and can lead to tire failure. Under-inflation also reduces fuel efficiency and tire tread life, and may affect the vehicle’s handling and stopping ability.

Please note that the TPMS is not a substitute for proper tire maintenance, and it is the driver’s responsibility to maintain correct tire pressure, even if under-inflation has not reached the level to trigger illumination of the TPMS low tire pressure telltale.

Your vehicle has also been equipped with a TPMS malfunction indicator to indicate when the system is not operating properly. The TPMS malfunction indicator is combined with the low tire pressure telltale. When the

system detects a malfunction, the telltale will flash for approximately one minute and then remain continuously illuminated. This sequence will continue upon subsequent vehicle start-ups as long as the malfunction exists. When the malfunction indicator is illuminated, the system may not be able to detect or signal low tire pressure as intended. TPMS malfunctions may occur for a variety of reasons, including the installation of replacement or alternate tires or wheels on the vehicle that prevent the TPMS from functioning properly. Always check the TPMS malfunction telltale after replacing one or more tires or wheels on your vehicle, to ensure that the replacement or alternate tires and wheels allow the TPMS to continue to function properly.

CAUTION!

The TPMS has been optimized for the original equipment tires and wheels. TPMS pressures and warning have been established for the tire size equipped on your vehicle. Undesirable system operation or sensor damage may result when using replacement equipment that is not of the same size, type, and/or style. Aftermarket wheels can cause sensor damage. Do not use tire sealant from a can, or balance beads if your vehicle is equipped with a TPMS, as damage to the sensors may result.

6. Oil Pressure Warning Light

This light indicates low engine oil pressure. The light should turn on momentarily when the engine is started. If the light turns on while driving, stop the vehicle and shut off the engine as soon as possible. A chime will sound for four minutes when this light turns on.

Do not operate the vehicle until the cause is corrected. This light does not indicate how much oil is in the engine. The engine oil level must be checked under the hood.

7. Engine Temperature Warning Light

This light warns of an overheated engine condition. As temperatures rise and the gauge approaches **H** , this indicator will illuminate and a single chime will sound after reaching a set threshold. Further overheating will cause the temperature gauge to pass **H** , the indicator will continuously flash and a continuous chime will occur until the engine is allowed to cool.

If the light turns on while driving, safely pull over and stop the vehicle. If the A/C system is on, turn it off. Also, shift the transmission into NEUTRAL and idle the vehicle. If the temperature reading does not return to normal, turn the engine off immediately and call for service. Refer to “If Your Engine Overheats” in “What To Do In Emergencies” for further information.

8. Speedometer

Indicates vehicle speed.

9. Turn Signal Indicators

The arrow will flash with the exterior turn signal when the turn signal lever is operated.

If the vehicle electronics sense that the vehicle has traveled about 1 mile (1.6 km) with the turn signals on, a continuous chime will sound to alert you to turn the signals off. If either indicator flashes at a rapid rate, check for a defective outside light bulb.

10. Electronic Stability Program (ESP) Indicator Light / Brake Assist System (BAS) Warning Light

ESP
BAS

The malfunction light for the Electronic Stability Program (ESP) is combined with Brake Assist System (BAS). The yellow "ESP/BAS Warning Light" comes on when the ignition switch is turned to the "ON" position. They should go out with the engine running. If the "ESP/BAS Warning Light" comes on continuously with the engine running, a malfunction has been detected in either the ESP or the BAS system. If this light remains on after several ignition cycles, and the vehicle has been driven several miles (kilometers) at speeds greater than 30 mph (48 km/h), see an authorized dealer as soon as possible.

WARNING!

If a warning light remains on the system may not be working and you will not have the benefit of ESP or BAS. Under certain driving conditions, where ESP or BAS would be beneficial, you - if you have not adjusted your driving speeds and stopping in or to account for the lack of the feature, may be in accident.

11. Brake Warning Light

BRAKE

This light monitors various brake functions, including brake fluid level and parking brake application. If the brake light turns on, it may indicate that the parking brake is applied, that the brake fluid level is low, or that there is a problem with the anti-lock brake system reservoir.

If the light remains on when the parking brake has been disengaged, and the fluid level is at the full mark on the master cylinder reservoir, it indicates a possible brake hydraulic system malfunction or that a problem with the Brake Booster has been detected by the Anti-Lock Brake System (ABS) / Electronic Stability Program (ESP) system. In this case, the light will remain on until the condition has been corrected. If the problem is related to the brake booster, the ABS pump will run when applying the brake and a brake pedal pulsation may be felt during each stop.

The dual brake system provides a reserve braking capacity in the event of a failure to a portion of the hydraulic system. A leak in either half of the dual brake system is indicated by the Brake Warning Light, which will turn on when the brake fluid level in the master cylinder has dropped below a specified level.

The light will remain on until the cause is corrected.

NOTE: The light may flash momentarily during sharp cornering maneuvers, which change fluid level conditions. The vehicle should have service performed, and the brake fluid level checked.

If brake failure is indicated, immediate repair is necessary.

WARNING!

Driving a vehicle with the red brake light on is dangerous. Part of the brake system may have failed. It will take longer to stop the vehicle. You could have an accident. Have the vehicle checked immediately.

Vehicles equipped with the Anti-Lock Brake System (ABS), are also equipped with Electronic Brake Force Distribution (EBD). In the event of an EBD failure, the Brake Warning Light will turn on along with the ABS Light. Immediate repair to the ABS system is required.

Operation of the Brake Warning Light can be checked by turning the ignition switch from the OFF position to the ON position. The light should illuminate for approximately two seconds. The light should then turn off unless the parking brake is applied or a brake fault is detected. If the light does not illuminate, have the light inspected by an authorized dealer.

The light also will turn on when the parking brake is applied with the ignition switch in the ON position.

NOTE: This light shows only that the parking brake is applied. It does not show the degree of brake application.

12. Vehicle Security Light — If Equipped

This light will flash at a fast rate for approximately 15 seconds, when the vehicle security alarm is arming, and then will flash slowly until the vehicle is disarmed.

13. Anti-Lock Brake (ABS) Light

This light monitors the Anti-Lock Brake System (ABS). The light will turn on when the ignition switch is turned to the ON position and may stay on for as long as four seconds.

If the ABS light remains on or turns on while driving, it indicates that the Anti-Lock portion of the brake system is not functioning and that service is required. However, the conventional brake system will continue to operate normally if the BRAKE warning light is not on.

If the ABS light is on, the brake system should be serviced as soon as possible to restore the benefits of Anti-Lock brakes. If the ABS light does not turn on when the Ignition switch is turned to the ON position, have the light inspected by an authorized dealer.

14. Electronic Stability Program (ESP) Indicator Light / Traction Control System (TCS) Indicator Light

If this indicator light flashes during acceleration, apply as little throttle as possible. While driving, ease up on the accelerator. Adapt your speed and driving to the prevailing road conditions, and do not switch off the Electronic Stability Program (ESP), or Traction Control System (TCS).

15. Tachometer

The red segments indicate the maximum permissible engine revolutions per minute (RPM x 1000) for each gear range. Before reaching the red area, ease up on the accelerator.

16. High Beam Indicator

This indicator shows that the high beam headlights are on. Push the multifunction lever forward to switch the headlights to high beam, and pull toward yourself (normal position) to return to low beam.

17. Front Fog Light Indicator — If Equipped

This indicator will illuminate when the front fog lights are on.

18. Seat Belt Reminder Light

When the ignition switch is first turned ON, this light will turn on for five to eight seconds as a bulb check. During the bulb check, if the driver's seat belt is unbuckled, a chime will sound. After the bulb check or when driving, if the driver's seat belt remains unbuckled, the Seat Belt Reminder Light will illuminate and the chime will sound. Refer to "Occupant Restraints" in "Things To Know Before Starting Your Vehicle" for further information.

19. Malfunction Indicator Light (MIL)

The Malfunction Indicator Light (MIL) is part of an onboard diagnostic system, called OBD, that monitors engine and automatic transmission control systems. The light will illuminate when the key is in

the ON position, before engine start. If the bulb does not come on when turning the key from OFF to ON, have the condition checked promptly.

Certain conditions such as a loose or missing gas cap, poor fuel quality, etc., may illuminate the MIL after engine start. The vehicle should be serviced if the light stays on through several of your typical driving cycles. In most situations, the vehicle will drive normally and will not require towing.

CAUTION!

Prolonged driving with the MIL on could cause damage to the engine control system. It also could affect fuel economy and drivability. If the MIL is flashing, severe catalytic converter damage and power loss will soon occur. Immediate service is required.

WARNING!

A malfunctioning catalytic converter, as referenced above, can reach higher temperatures than in normal operating conditions. This can cause a fire if you drive slowly or park over flammable substances such as dry plants or wood or cardboard, etc. This could result in death or serious injury to the driver, occupants or others.

20. Airbag Warning Light

This light will turn on for four to eight seconds as a bulb check when the ignition switch is first turned ON. If the light is either not on during starting, stays on, or turns on while driving, then have the system inspected at an authorized dealer as soon as possible. Refer to “Occupant Restraints” in “Things To Know Before Starting Your Vehicle” for further information.

21. Temperature Gauge

The temperature gauge shows engine coolant temperature. Any reading within the normal range indicates that the engine cooling system is operating satisfactorily.

The gauge pointer will likely indicate a higher temperature when driving in hot weather, up mountain grades, or when towing a trailer. It should not be allowed to exceed the upper limits of the normal operating range.

CAUTION!

Driving with a hot engine cooling system could damage your vehicle. If temperature gauge reads "H" pull over and stop the vehicle. Idle the vehicle with the air conditioner turned off until the pointer drops back into the normal range. If the pointer remains on the "H" and you hear continuous chimes, turn the engine off immediately, and call an authorized dealership for service.

WARNING!

A hot engine cooling system is dangerous. You or others could be badly burned by steam or boiling coolant. You may want to call an authorized dealership for service if your vehicle overheats. If you decide to look under the hood yourself, see "Maintaining Your Vehicle". Follow the warnings under the Cooling System Pressure Cap paragraph.

22. Odometer / Trip Odometer / ECO (Fuel Saver Indicator) Button — If Equipped

Press this button to change the display from odometer to either of two trip odometer settings or the ECO display. The letter "A" or "B" will appear when in the trip odometer mode. Push in and hold the button for two seconds to reset the trip odometer to 0 miles (km). The odometer must be in TRIP mode to reset it.

NOTE: On the Base cluster, the reset button toggles between odometer, Trip A, Trip B, ECO and outside temperature. To reset a message display on Base Cluster (gATE, gASCAP, noFUSE, CHangE OIL, LoCOOL, LoWASH, etc.), push and hold the button until the display resets (approximately two seconds).

23. Shift Lever Indicator
The Shift Lever Indicator is self-contained within the instrument cluster. It displays the gear position of the automatic transmission.

NOTE: You must apply the brakes before shifting from PARK.

24. Message Display Area
When the appropriate conditions exist, the following odometer messages will display:

ECO . . . . . Fuel Saver Indicator Off
ECO-on . . . . . Fuel Saver Indicator On
door . . . . . Door Ajar
gATE . . . . . Liftgate Ajar
LoW tirE. . . . . Low Tire Pressure
gASCAP . . . . . Fuel Cap Fault
noFUSE . . . . . Fuse Fault
CHAngE OIL . . . . . Oil Change Required
CRUISE. . . . . Cruise Control On
LoCOOL . . . . . Low Coolant
LoWASH . . . . . Low Washer Fluid

NOTE: Some of the above warnings will be displayed in the Compass Mini-Trip Computer / Electronic Vehicle Information Center Display Area located in the instrument cluster.

Refer to "Compass Mini-Trip Computer (CMTC) Display— If Equipped" / "Electronic Vehicle Information Center (EVIC) Display — If Equipped" for further information.

ECO / ECO-on (Fuel Saver Indicator) — If Equipped
The ECO-on indicator will illuminate when you are driving in a fuel efficient manner and can be used to modify driving habits in order to increase fuel economy. The ECO display will toggle between ECO and ECO-on depending on driving habits and vehicle usage. Press the Odometer / Trip Odometer / ECO (Fuel Saver Indicator) button to change the display from odometer to either of the two trip odometer settings or the "ECO" display.

LoW tirE
When the appropriate condition exists, the odometer display will toggle between LoW and tirE for three cycles.

gASCAP
If the vehicle diagnostic system determines that the fuel filler cap is loose, improperly installed, or damaged, a "gASCAP" message will display in the odometer display area. Tighten the fuel filler cap properly and press the TRIP ODOMETER button to turn off the message. If the problem continues, the message will appear the next time the vehicle is started.

noFUSE
If the vehicle diagnostic system determines that the Ignition Off Draw (IOD) fuse is improperly installed, or damaged, a "noFUSE" message will display in the odometer display area. For further information on fuses and fuse locations refer to "Fuses" in "Maintaining Your Vehicle".

CHAngE OIL
Your vehicle is equipped with an engine oil change indicator system. The **CHAngE OIL** message will flash in the instrument cluster odometer for approximately 12 seconds, after a single chime has sounded, to indicate the next scheduled oil change interval. The engine oil change indicator system is duty cycle-based, which

means the engine oil change interval may fluctuate dependent upon your personal driving style.

Unless reset, this message will continue to display each time you turn the ignition switch to the ON/RUN position. To turn off the message temporarily, press and release the Trip / Odometer Display reset button on the instrument cluster. To reset the oil change indicator system (after performing the scheduled maintenance), perform the following steps.

1. Turn the ignition switch to the ON position (do not start the engine).

2. Fully depress the accelerator pedal, slowly, three times within 10 seconds.

3. Turn the ignition switch to the OFF/LOCK position.

NOTE: If the indicator message illuminates when you start the engine, the oil change indicator system did not reset. If necessary, repeat these steps.

25. Odometer

The odometer shows the total distance the vehicle has been driven.

U.S. Federal regulations require that upon transfer of vehicle ownership, the seller certify to the purchaser the correct mileage that the vehicle has been driven. If your odometer needs to be repaired or serviced, the repair technician should leave the odometer reading the same as it was before the repair or service. If s/he cannot do so, then the odometer must be set at zero, and a sticker must be placed in the door jamb stating what the mileage was before the repair or service. It is a good idea for you to make a record of the odometer reading before the repair/service, so that you can be sure that it is properly reset, or that the door jamb sticker is accurate if the odometer must be reset at zero.

26. Compass Mini-Trip Computer (CMTC) or Electronic Vehicle Information Center (EVIC) Display — If Equipped

Compass Mini-Trip Computer (CMTC) Display — If Equipped

On vehicles equipped with Compass Mini-Trip Computer (CMTC), the display provides the outside temperature, one of eight compass headings to indicate the direction the vehicle is facing, and the current radio station. For further information refer to "Compass Mini-Trip Computer".

Electronic Vehicle Information Center (EVIC) Display — If Equipped

The Electronic Vehicle Information Center (EVIC) features a driver-interactive display that is located in the instrument cluster. For further information refer to "Electronic Vehicle Information (EVIC)".

27. Compass Mini-Trip Computer (CMTC) Display Button

Press the left reset button to scroll through sub-menus (i.e., Outside Temperature, Trip Functions: AVG Fuel Economy, DTE, Elapsed Time, and Units). Press and hold the reset button for approximately two seconds, to reset the display shown.

28. Fuel Door Reminder

The arrow in this symbol is a reminder that the Fuel Filler Door is located on the left side of the vehicle.

COMPASS MINI-TRIP COMPUTER (CMTC) — IF EQUIPPED

NOTE:

- The compass on your vehicle is self-calibrating, eliminating the need to manually calibrate the compass.
- If the vehicle is equipped with a Chrysler ™ gps (Navigation Radio), the NAV system will provide the compass direction, and the variance and calibration menus will be unavailable. The compass will perform accurately, based on GPS signals instead of the Earth's magnetic field.

The Compass Mini-Trip Computer is located in the instrument cluster and features a driver-interactive display (displays information on outside temperature, compass direction, and trip information).

NOTE: The system will display the last known outside temperature when starting the vehicle and may need to be driven several minutes before the updated temperature is displayed. Engine temperature can also affect the displayed temperature, therefore temperature readings are not updated when the vehicle is not moving.

CMTC Reset Buttons

CMTC Reset Button

Press the left reset button located on the instrument cluster to scroll through sub menus (i.e., Trip Functions: AVG Fuel Economy, DTE, Elapsed Time, and Units).

To reset the display shown, turn the ignition switch to the ON position, then press and hold the reset button for approximately two seconds.

When the appropriate conditions exist, the following messages will display:

NE . . . . . Eight-point compass headings are displayed (N, S, E, W, NE, NW, SE, SW)
14°F. . . . . Temperature (Fahrenheit or Celsius)
AVG . . . . . Average Fuel Economy (U.S. or Metric)
DTE . . . . . Distance to Empty
ET . . . . . Elapsed Time
P. . . . . Park Assist On/Off

Should this wrench symbol display with the letter **P** next to it, your Park Assist System needs servicing. Contact an authorized dealer.

CMTC Trip Odometer (ODO) / ECO (Fuel Saver Indicator) — If Equipped

This display shows the distance traveled since the last reset. Press and release the right button on the instrument cluster to switch from odometer, to Trip A or Trip B, or to ECO. Press and hold the right button while the odometer/trip odometer is displayed to reset.

Trip A

Shows the total distance traveled for Trip A since the last reset.

Trip B

Shows the total distance traveled for Trip B since the last reset.

ECO (Fuel Saver Indicator) — If Equipped

The ECO-ON indicator will illuminate when you are driving in a fuel efficient manner and can be used to modify driving habits in order to increase fuel economy. The ECO display will toggle between ECO and ECO-ON depending on driving habits and vehicle usage.

Compass/Temperature Display

Compass Variance

Compass Variance is the difference between Magnetic North and Geographic North. To ensure compass accuracy, the compass variance should be properly set according to the variance map for the zone where the vehicle will be driven. When properly set, the compass will automatically account for this difference.

NOTE:

- A good calibration requires a level surface and an environment free from large metallic objects such as buildings, bridges, underground cables, railroad tracks, etc.
- Magnetic and battery powered devices, (such as cell phones, iPod's, radar detectors, PDA's and laptops) should be kept away from the top of the instrument panel. This is where the compass module is located and such devices may interfere and cause false compass readings.

Compass Variance Map

To Set the Variance

Start the engine and leave the transmission gear selector lever in the PARK position. Press and hold the CMTC reset button (for approximately ten seconds) until the current variance zone number is displayed. To change the zone, press and release the CMTC reset button to increase the variance one step. Repeat as necessary until the desired variance is achieved.

NOTE: The factory default zone is 8. During programming, the zone value will wrap around from zone 15 to zone 1.

Manual Compass Calibration

If the compass appears erratic or inaccurate, and the variance has been properly set, you may wish to manually recalibrate the compass. To manually calibrate the compass:

1. Start the engine and leave the transmission in the PARK position.

2. Press and hold the CMTC reset button (for approximately 10 seconds) until the current variance zone number is displayed.

3. Release the CMTC reset button, then press and hold again for approximately 10 seconds, until the direction is displayed, with the CAL indicator on continuously in the display.

4. To complete the compass calibration, drive the vehicle in one or more complete 360–degree circles, under 5 mph (8 km/h) in an area free from power lines and large metallic objects, until the CAL indicator turns off. The compass will now function normally.

ELECTRONIC VEHICLE INFORMATION CENTER (EVIC) — IF EQUIPPED

The Electronic Vehicle Information Center (EVIC) features a driver-interactive display that is located in the instrument cluster.

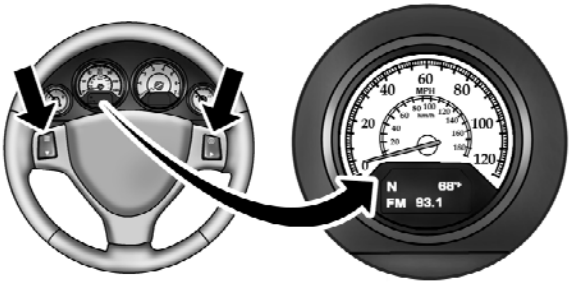

041005524

Electronic Vehicle Information Center (EVIC)

This system conveniently allows the driver to select a variety of useful information by pressing the switches mounted on the steering wheel. The EVIC consists of the following:

- System Status display
- Vehicle information warning message displays
- Tire Pressure Monitor System
- Personal Settings (Customer-Programmable Features)
- Compass display
- Outside temperature display
- Trip computer functions
- Audio Modes display

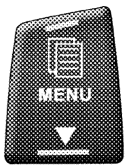

EVIC Menu / Step Control Button, as it appears on the left side of the steering wheel spoke.

Press and release the MENU button, and the mode displayed will change between Compass/Temperature, Trip, System Status, and Personal Settings.

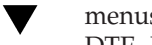

Press the STEP button to scroll through sub menus (i.e., Trip Functions, Avg. Fuel Economy, DTE, Elapsed Time, and Units).

Steering Wheel EVIC Compass/Temp Control Button, as it appears on the right side of the steering wheel spoke.

Press and release the Compass/Temperature button to for instant access to the Compass/ Temperature screens.

Press this button to RESET Trip Functions and change Personal Settings.

Electronic Vehicle Information Center (EVIC) Displays

When the appropriate conditions exist, the EVIC displays the following messages:

- Door(s) Ajar (with a single chime, if vehicle is in motion)
- Liftgate Ajar (chime will sound when vehicle starts moving)
- Check TPM System (refer to “Tire Pressure Monitoring System” in “Starting And Operating”)
- Turn Signal On
- RKE Battery Low

- LOW WASHER FLUID
- Oil Change Required
- Check Gascap
- Left Front Turn Signal Light Out
- Left Rear Turn Signal Light Out
- Right Front Turn Signal Light Out
- Right Rear Turn Signal Light Out
- Park Assist Disabled
- Service Park Assist System
- Personal Settings Not Available — Vehicle Not in Park
- Blind Spot System Off — This message is displayed when the ignition is turned to ON to indicate the Blind Spot System has been turned off.
- Blind Spot System Not Available — This message is displayed to indicate the Blind Spot Monitor (BSM) system is temporarily unavailable due to sensor blockage, electronic interference, or other "temporary" conditions. When this message is displayed both outside rear view icons will be illuminated. If electronic interference is present, the BSM system will illuminate the icon only on the side of interference as long as interference is present.
- Service Blind Spot System — This message is displayed to indicate the Blind Spot Monitor (BSM) system is permanently unavailable. The driver will receive an EVIC message and the BSM display warning in both mirrors will be permanently illuminated. If this message is present see an authorized dealer.
- ECO (Fuel Saver Indicator) — If Equipped

Oil Change Required

Your vehicle is equipped with an engine oil change indicator system. The **Oil Change Required** message will flash in the EVIC display for approximately 10 seconds, after a single chime has sounded, to indicate the next scheduled oil change interval. The engine oil change indicator system is duty-cycle based, which means the engine oil change interval may fluctuate dependent upon your personal driving style.

Unless reset, this message will continue to display each time you turn the ignition switch to the ON/RUN position. To turn off the message temporarily, press and release the Menu button. To reset the oil change indicator system (after performing the scheduled maintenance) perform the following steps.

1. Turn the ignition switch to the ON position (do not start the engine).

2. Fully depress the accelerator pedal, slowly, three times within 10 seconds.

3. Turn the ignition switch to the OFF/LOCK position.

NOTE: If the indicator message illuminates when you start the engine, the oil change indicator system did not reset. If necessary, repeat these steps.

Trip Functions

Press and release the MENU button until one of the following Trip Functions displays in the EVIC.

Press the STEP button to scroll through all the Trip Computer functions.

The Trip Functions mode displays the following information.

Average Fuel Economy

Shows the average fuel economy since the last reset. When the fuel economy is reset, the display will read

"RESET" or show dashes for two seconds. Then, the history information will be erased, and the averaging will continue from the last fuel average reading before the reset.

Distance To Empty (DTE)
Shows the estimated distance that can be traveled with the fuel remaining in the tank. This estimated distance is determined by a weighted average of the instantaneous and average fuel economy, according to the current fuel tank level.

NOTE: Significant changes in driving style or vehicle loading will greatly affect the actual drivable distance of the vehicle, regardless of the DTE displayed value.

When the DTE value is less than 30 miles (48 km) estimated driving distance, the DTE display will change to a text display of "LOW FUEL." This display will continue until the vehicle runs out of fuel. Adding a significant amount of fuel to the vehicle will turn off the "LOW FUEL" text and a new DTE value will display.

Elapsed Time
Shows the total elapsed time of travel since the last reset when the ignition switch is in the ACC position. Elapsed time will increment when the ignition switch is in the ON or START position.

Display Units of Measure in:
To make your selection, press and release the STEP button until "ENGLISH" or "METRIC" appears.

To Reset the Display
Reset will only occur while a resettable function is being displayed. Press and release the RESET button once to clear the resettable function being displayed. To reset all resettable functions, press and release the RESET button a second time, within three seconds of resetting the currently-displayed function (Reset ALL will display during this three-second window).

Compass Display / ECO (Fuel Saver Mode) — If Equipped

COMPASS Button

The compass readings indicate the direction the vehicle is facing. Press and release the compass button to display one of eight compass readings, and the outside temperature.

NOTE: The system will display the last known outside temperature when starting the vehicle and may need to be driven several minutes before the updated temperature is displayed. Engine temperature can also affect the displayed temperature, therefore temperature readings are not updated when the vehicle is not moving.

ECO (Fuel Saver Mode) — If Equipped

The ECO message will display below the outside temperature in the EVIC display. This message will appear whenever you are driving in a fuel efficient manner. This feature allows you to monitor when you are driving in a fuel efficient manner, and it can be used to modify driving habits in order to increase fuel economy.

Automatic Compass Calibration

This compass is self-calibrating, which eliminates the need to manually reset the compass. When the vehicle is new, the compass may appear erratic and the EVIC will display CAL until the compass is calibrated. You may also calibrate the compass by completing one or more 360–degree turns (in an area free from large metal or metallic objects) until the CAL indicator displayed in the EVIC turns off. The compass will now function normally.

Manual Compass Calibration

If the compass appears erratic and the CAL indicator does not appear in the EVIC display, you must put the compass into the Calibration Mode manually, as follows:

1. Turn ON the ignition switch.

2. Press the MENU button until Personal Settings (Customer-Programmable Features) menu is reached.

3. Press the STEP button until “Calibrate Compass” is displayed in the EVIC.

4. Press and release the RESET button to start the calibration. The “CAL” indicator will be displayed in the EVIC.

5. Complete one or more 360–degree turns (in an area free from large metal or metallic objects) until the “CAL” indicator turns off. The compass will now function normally.

Compass Variance

Compass Variance is the difference between Magnetic North and Geographic North. To compensate for the differences, the variance should be set for the zone where the vehicle is driven, per the zone map. Once properly set, the compass will automatically compensate for the differences, and provide the most accurate compass heading. For the most accurate compass performance, the compass must be set using the following steps.

NOTE: Keep magnetic materials away from the top of the instrument panel, such as iPod’s, Cell Phones, Laptops and Radar Detectors. This is where the compass module is located, and it can cause interference with the compass sensor, and it may give false readings.

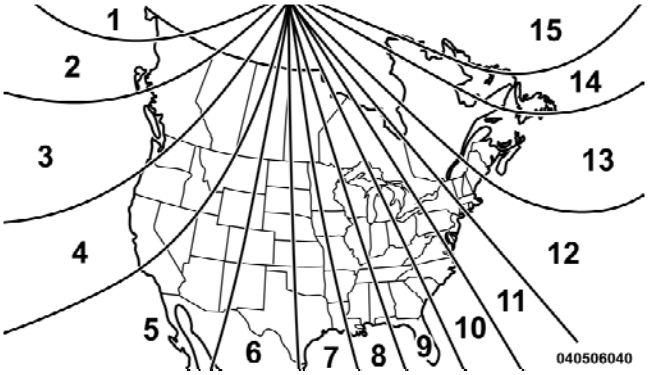

Compass Variance Map

1. Turn the ignition switch ON.

2. Press and hold the compass button for approximately two seconds.

3. Press the STEP button until “Compass Variance” message, and the last variance zone number, displays in the EVIC.

4. Press and release the STEP button until the proper variance zone is selected, according to the map.

5. Press and release the compass button to exit.

Personal Settings (Customer-Programmable Features)

Personal Settings allows you to set and recall features when the transmission is in PARK. If the transmission is out of PARK or the vehicle begins moving, a warning message **PERSONAL SETTING NOT AVAILABLE** , followed in three seconds by, **VEHICLE NOT IN PARK**.

Press and release the MENU button until Personal Settings displays in the EVIC.

Use the Step button to display one of the following choices.

Language

When in this display you may select one of five languages for all display nomenclature, including the trip functions and the navigation system (if equipped). Press the RESET button while in this display to select English, Spanish (Español), French (Français), Italian (Italiano), German (Deutsch), and Dutch (Nederlands). Then, as you continue, the information will display in the selected language.

Auto Door Locks

When ON is selected, all doors will lock automatically when the vehicle reaches a speed of 15 mph (24 km/h). To make your selection, press and release the RESET button until ON or OFF appears.

Auto UNLK On Exit

When ON is selected, all doors will unlock when the vehicle is stopped and the transmission is in the PARK or NEUTRAL position and the driver's door is opened. To make your selection, press and release the RESET button until ON or OFF appears.

RKE Unlock

When **Driver Door 1st Press** is selected, only the driver's door will unlock on the first press of the Remote Keyless Entry (RKE) transmitter UNLOCK button. When Driver Door 1st Press is selected, you must press the RKE transmitter UNLOCK button twice, to unlock the passenger's doors. When **All Doors 1st Press** is selected, all of the doors will unlock on the first press of the RKE transmitter UNLOCK button. To make your selection, press and release the RESET button until "Driver Door 1st Press" or "All Doors 1st Press" appears.

RKE Linked To Memory

When this feature is selected the memory seat, mirror, and radio settings will return to the memory set position when the RKE transmitter UNLOCK button is pressed. If this feature is not selected then the memory seat, mirror, and radio settings can only return to the memory set position using the door mounted switch. Pressing the RESET button when in this display will select "Yes" or "No."

Flash Lamp Lock

When ON is selected, the front and rear turn signals will flash when the doors are locked or unlocked with the RKE transmitter. This feature may be selected with or without the sound horn on lock feature selected. To make your selection, press and release the RESET button until ON or OFF appears.

Headlamp Off Delay
When this feature is selected, the driver can choose to have the headlights remain on for 0, 30, 60, or 90 seconds when exiting the vehicle. To make your selection, press and release the RESET button until 0, 30, 60, or 90 appears.

Easy Exit Seat
This feature provides automatic driver seat positioning to enhance driver mobility when entering and exiting the vehicle. To make your selection, press and release the RESET button until YES (Y) or NO (N) appears.

NOTE: The seat will return to the memorized seat location (if Recall Memory with Remote Key Unlock is set to ON) when the RKE transmitter is used to unlock the door. Refer to "Driver Memory Seat" in "Understanding The Features Of Your Vehicle" for further information.

Tilt MIRR. In Reverse
When this feature is selected and the vehicle is placed in a reverse gear, the driver's side mirror will tilt downward to allow the driver to see into the previous blind spot and avoid objects in close proximity to the rear of the vehicle.

Key-Off Power Delay
When this feature is selected, the power window switches, radio, Uconnect™ Phone (if equipped), DVD video system (if equipped), power sunroof (if equipped), and power outlets will remain active for up to 10 minutes after the ignition switch is turned OFF. Opening a vehicle door will cancel this feature. To make your selection, press and release the RESET button until Off, 45 sec., 5 min., or 10 min. appears.

ILLUMIN. Approach
When this feature is selected, the headlights will activate and remain on for up to 90 seconds when the doors are

unlocked with the RKE transmitter. To make your selection, press and release the RESET button until “OFF,” “30 sec.,” “60 sec.,” or “90 sec.” appears.

Blind Spot Alert

There are three selections when operating Blind Spot Alert. By pressing and releasing the RESET button once, the Blind Spot Alert feature can be activated in “Blind Spot Alert Lights” mode. When this mode is selected the Blind Spot Monitor (BSM) system is activated and will only show a visual alert in the outside mirrors. By pressing and releasing the RESET button a second time “Blind Spot Alert Lights/CHM” mode is activated. In this mode the Blind Spot Monitor (BSM) will show a visual alert in the outside mirrors as well as an audible alert when the turn signal is on. When “Blind Spot Alert Off” is selected the Blind Spot Monitor (BSM) system is deactivated.

NOTE: If your vehicle has experienced any damage in the area where the sensor is located, even if the fascia is not damaged, the sensor may have become misaligned. Take your vehicle to an authorized dealer to verify sensor alignment. Having a sensor that is misaligned will result in the BSM not operating to specification.

Enable/Disable the Rear Park Assist System

The Rear Park Assist system will scan for objects behind the vehicle when the transmission is in the REVERSE and the vehicle speed is less than 11 mph (18 km/h). The system can be enabled with Sound Only, Sound and Display, or turned OFF through the EVIC, to make your selection, press and release the RESET button. Refer to “Rear Park Assist System” in “Understanding The Features Of Your Vehicle” for system function and operating information.

Display Units of Measure In

The EVIC, odometer, and navigation system (if equipped) can be changed between English and Metric units of measure. To make your selection, press and release the RESET button until ENGLISH or METRIC appears.

Door Alert

When this feature is selected the signal lamps activate when power or manual sliding doors are in operation, signaling other drivers that someone may be exiting or entering the vehicle.

Sound Horn with Remote Key Lock

When ON is selected, a short horn sound will occur when the RKE transmitter LOCK button is pressed. This feature may be selected with or without the Flash Lamp Lock feature. To make your selection, press and release the RESET button until ON or OFF appears.

Turn Headlights On with Remote Key Unlock

When this feature is selected, the headlights will activate, and remain on for up to 90 seconds, when the doors are unlocked with the RKE transmitter. To make your selection, press and release the RESET button until OFF, 30 sec., 60 sec., or 90 sec. appears.

Automatic High Beams — If Equipped

When this feature is selected, the high beam headlights will deactivate automatically under certain conditions. To make your selection, press and release the RESET button until “ON” or “OFF” appears. Refer to “SmartBeam™” in “Understanding The Features Of Your Vehicle” for further information.

Display ECO — If Equipped

The “ECO” message can be turned on or off. To make your selection, press and release the FUNCTION SELECT button until “ON” or “OFF” appears.

Rain Sensing Intermittent Wipers — If Equipped
When ON is selected, the system will automatically activate the windshield wipers if it senses moisture on the windshield. To make your selection, press and release the RESET button until "ON" or "OFF" appears. When OFF is selected, the system reverts to the standard intermittent wiper operation.

MEDIA CENTER 730N/430 (RER/RBZ) — AM/FM STEREO RADIO AND CD/DVD/HDD/NAV — IF EQUIPPED

NOTE: The sales code is located on the lower right side of the unit's faceplate.

The RER and RBZ radios contain a CD/DVD player, USB port, and a 30-gigabyte hard drive (HDD). Sirius Satellite Radio is optional. The 6.5 in (16.5 cm) touch screen allows for easy menu selection.

The RER radio also contains a Global Positioning System (GPS)-based Navigation system.

Refer to your Uconnect™ Multimedia RER or RBZ user's manual for detailed operating instructions.

Operating Instructions — Voice Command System (VR) — If Equipped

Refer to "Voice Command" in the Uconnect™ User Manual located on the DVD for further details.

Operating Instructions — Uconnect™ Phone — If Equipped

Refer to "Uconnect™ Phone" in the Uconnect™ User Manual located on the DVD for further details.

Clock Setting Procedure — RBZ Radio

To Manually Set the Clock

1. Turn on the radio.

2. Touch the screen where the time is displayed, the clock setting menu will appear on the screen.

3. To move the hour forward, touch the screen where the word “Hour” with the arrow pointing upward is displayed. To move the hour backward, touch the screen where the word “Hour” with the arrow pointing downward is displayed.

4. To move the minute forward, touch the screen where the word “Min” with the arrow pointing upward is displayed. To move the minute backward, touch the screen where the word “Min” with the arrow pointing downward is displayed.

5. To save the new time setting, touch the screen where the word “Save” is displayed.

Changing Daylight Savings Time

When selected, this feature will display the time of day in daylight savings time. Proceed as follows to change the current setting:

1. Turn on the radio.

2. Touch the screen where the time is displayed. The clock setting menu will appear on the screen.

3. When this feature is on, a check mark will appear in the box next to the words “Daylight Savings.” Touch the screen where the words “Daylight Savings” are displayed to change the current setting.

Show Time if Radio is Off

When selected, this feature will display the time of day on the touch screen when the radio is turned off. Proceed as follows to change the current setting:

1. Turn on the radio.

2. Touch the screen where the time is displayed. The clock setting menu will appear on the screen.

3. When this feature is on, a check mark will appear in the box next to the words “Show Time if Radio is Off.” Touch the screen where the words “Show Time if Radio is Off” are displayed to change the current setting.

Changing the Time Zone

1. Turn on the radio.

2. Touch the screen where the time is displayed. The clock setting menu will appear on the screen.

3. Touch the screen where the words “Set Time Zone” are displayed. The time zone selection menu will appear on the screen.

4. Select a time zone by touching the screen where your selection appears. If you do not see a time zone that you want to select, touch the screen where the word “Page” is displayed to view additional time zones in the menu.

5. Touch the screen where the word “Save” is displayed.

Clock Setting Procedure — RER Radio

Uconnect™ gps — RER Only

The GPS receiver used in this system is synchronized to the time data being transmitted by the GPS satellite. The satellite clock is Greenwich Mean Time (GMT). This is the worldwide standard for time. This makes the system’s clock very accurate once the appropriate time zone and daylight savings information is set.

To Manually Set the Clock — RER

1. Turn on the radio.

2. Touch the screen where the time is displayed.

3. Touch the screen where “User Clock” is displayed, the clock setting menu will appear on the screen.

4. To move the hour forward, touch the screen where the word “Hour” with the arrow pointing upward is displayed. To move the hour backward, touch the screen where the word “Hour” with the arrow pointing downward is displayed.

5. To move the minute forward, touch the screen where the word “Min” with the arrow pointing upward is displayed. To move the minute backward, touch the screen where the word “Min” with the arrow pointing downward is displayed.

6. To save the new time setting, touch the screen where the word “Save” is displayed.

Changing Daylight Savings Time

When selected, this feature will display the time of day in daylight savings time. Proceed as follows to change the current setting:

1. Turn on the radio.

2. Touch the screen where “User Clock” is displayed, the clock setting menu will appear on the screen.

3. When this feature is on, a check mark will appear in the box next to the words “Daylight Savings.” Touch the screen where the words “Daylight Savings” are displayed to change the current setting.

Show Time if Radio is Off

When selected, this feature will display the time of day on the touch screen when the radio is turned off. Proceed as follows to change the current setting:

1. Turn on the radio.

2. Touch the screen where the time is displayed.

3. Touch the screen where “User Clock” is displayed, the clock setting menu will appear on the screen.

4. When this feature is on, a check mark will appear in the box next to the words “Show Time if Radio is Off.”

Touch the screen where the words “Show Time if Radio is Off” are displayed to change the current setting.

Changing the Time Zone

1. Turn on the radio.

2. Touch the screen where the time is displayed.

3. Touch the screen where “User Clock” is displayed, the clock setting menu will appear on the screen.

4. Touch the screen where the words “Set Time Zone” are displayed. The time zone selection menu will appear on the screen.

5. Select a time zone by touching the screen where your selection appears. If you do not see a time zone that you want to select, touch the screen where the word “Page” is displayed to view additional time zones in the menu.

6. Touch the screen where the word “Save” is displayed.

MEDIA CENTER 130 (RES) — AM/FM STEREO RADIO WITH CD PLAYER (MP3 AUX JACK)

NOTE: The radio sales code is located on the lower right side of the radio faceplate.

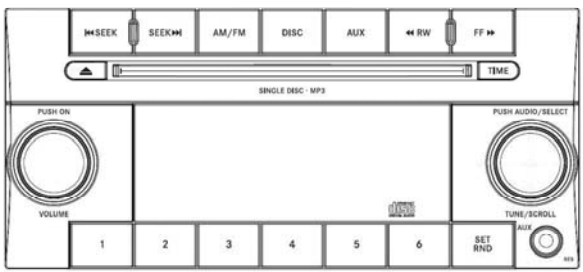

042305232

Media Center 130 (RES)

Operating Instructions — Radio Mode

NOTE: The ignition switch must be in the ON or ACC position to operate the radio.

Power Switch/Volume Control (Rotary)
Push the ON/VOLUME control knob to turn on the radio. Push the ON/VOLUME control knob a second time to turn off the radio.

Electronic Volume Control
The electronic volume control turns continuously (360 degrees) in either direction, without stopping. Turning the ON/VOLUME control knob to the right increases the volume, and to the left decreases it.

When the audio system is turned on, the sound will be set at the same volume level as last played.

SEEK Buttons
Press and release the SEEK buttons to search for the next listenable station in AM/FM mode. Press the right switch to seek up and the left switch to seek down. The radio will remain tuned to the new station until you make another selection. Holding either button will bypass stations without stopping, until you release it.

TIME Button
Press the TIME button to alternate display of the time and radio frequency.

Clock Setting Procedure

1. Press and hold the TIME button until the hours blink.

2. Adjust the hours by turning the right side TUNE/SCROLL control knob.

3. After adjusting the hours, press the right side TUNE/SCROLL control knob to set the minutes. The minutes will begin to blink.

4. Adjust the minutes using the right side TUNE/SCROLL control knob. Press the TUNE/SCROLL control knob to save time change.

5. To exit, press any button/knob, or wait five seconds.

RW/FF
Pressing the RW (Rewind) or FF (Fast Forward) buttons causes the tuner to search for the next frequency in the direction of the arrows. This feature operates in either AM or FM frequencies.

TUNE Control
Turn the rotary TUNE/SCROLL control knob clockwise to increase or counterclockwise to decrease the frequency.

Setting the Tone, Balance, and Fade
Push the rotary TUNE/SCROLL control knob and BASS will display. Turn the TUNE/SCROLL control knob to the right or left to increase or decrease the bass tones.

Push the rotary TUNE/SCROLL control knob a second time and MID will display. Turn the TUNE/SCROLL control knob to the right or left to increase or decrease the mid-range tones.

Push the rotary TUNE/SCROLL control knob a third time and TREBLE will display. Turn the TUNE/SCROLL control knob to the right or left to increase or decrease the treble tones.

Push the rotary TUNE/SCROLL control knob a fourth time and BALANCE will display. Turn the TUNE/SCROLL control knob to the right or left to adjust the sound level from the right or left side speakers.

Push the rotary TUNE/SCROLL control knob a fifth time and FADE will display. Turn the TUNE/SCROLL control knob to the left or right to adjust the sound level between the front and rear speakers.

Push the rotary TUNE/SCROLL control knob again to exit setting tone, balance, and fade.

AM/FM Button
Press the buttons to select either AM or FM mode.

SET/RND Button — To Set the Pushbutton Memory
When you are receiving a station that you wish to commit to pushbutton memory, press the SET/RND button. The symbol SET 1 will now show in the display window. Select the button (1 to 6) you wish to lock onto this station and press and release that button. If a button is not selected within five seconds after pressing the SET/RND button, the station will continue to play but will not be stored into pushbutton memory.

You may add a second station to each pushbutton by repeating the above procedure with this exception: Press the SET/RND button twice and SET 2 will show in the display window. Each button can be set for SET 1 and SET 2 in both AM and FM. This allows a total of 12 AM and 12 FM stations to be stored into pushbutton memory. The stations stored in SET 2 memory can be selected by pressing the pushbutton twice.

Every time a preset button is used, a corresponding button number will display.

Buttons 1 - 6
These buttons tune the radio to the stations that you commit to pushbutton memory (12 AM and 12 FM stations).

DISC Button
Pressing the DISC button will allow you to switch from AM/FM modes to Disc modes.

Operation Instructions — CD MODE For CD And MP3 Audio Play

NOTE:

- The ignition switch must be in the ON or ACC position to operate the radio.
- This radio is capable of playing compact discs (CD), recordable compact discs (CD-R), rewritable compact discs (CD-RW), compact discs with MP3 tracks and multisession compact discs with CD and MP3 tracks.

Inserting Compact Disc(s)

Gently insert one CD into the CD player with the CD label facing up. The CD will automatically be pulled into the CD player and the CD icon will illuminate on the radio display. If a CD does not go into the slot more than 1.0 in (2.5 cm), a disc may already be loaded and must be ejected before a new disc can be loaded.

If you insert a disc with the ignition ON and the radio ON, the unit will switch from radio to CD mode and begin to play when you insert the disc. The display will show the track number, and index time in minutes and seconds. Play will begin at the start of track 1.

CAUTION!

- **This CD player will accept 4-3/4 in (12 cm) discs only. The use of other sized discs may damage the CD player mechanism.**
- **Do not use adhesive labels. These labels can peel away and jam the player mechanism.**
- **RES is a single CD player. Do not attempt to insert a second CD if one is already loaded.**
- **Dual-media disc types (one side is a DVD, the other side is a CD) should not be used, and they can cause damage to the player.**

EJECT Button - Ejecting a CD

Press the EJECT button to eject the CD.

If you have ejected a disc and have not removed it within 10 seconds, it will be reloaded. If the CD is not removed, the radio will reinsert the CD but will not play it.

A disc can be ejected with the radio and ignition OFF.

NOTE: Ejecting with the ignition OFF is not allowed on convertible or soft-top models (if equipped).

SEEK Button

Press the right SEEK button for the next selection on the CD. Press the left SEEK button to return to the beginning of the current selection, or return to the beginning of the previous selection if the CD is within the first second of the current selection. Pressing and holding the SEEK button will allow faster scrolling through the tracks in CD and MP3 modes.

TIME Button

Press this button to change the display from a large CD playing time display to a small CD playing time display.

RW/FF

Press and hold the FF (Fast Forward) button and the CD player will begin to fast forward until FF is released, or RW or another CD button is pressed. The RW (Reverse) button works in a similar manner.

AM/FM Button

Press the button to select either AM or FM mode.

SET/RND Button (Random Play Button)
Press this button while the CD is playing to activate Random Play. This feature plays the selections on the compact disc in random order to provide an interesting change of pace.

Press the right SEEK button to move to the next randomly selected track.

Press the RND button a second time to stop Random Play.

Notes on Playing MP3 Files

The radio can play MP3 files; however, acceptable MP3 file recording media and formats are limited. When writing MP3 files, pay attention to the following restrictions.

Supported Media (Disc Types)
The MP3 file recording media supported by the radio are CDDA, CD-R, CD-RW, MP3, and CDDA+MP3.

Supported Medium Formats (File Systems)
The medium formats supported by the radio are ISO 9660 Level 1 and Level 2 and includes the Joliet extension. When reading discs recorded using formats other than ISO 9660 Level 1 and Level 2, the radio may fail to read files properly and may be unable to play the file normally. UDF and Apple HFS formats are not supported.

The radio uses the following limits for file systems:

- Maximum number of folder levels: 8
- Maximum number of files: 255
- Maximum number of folders. (The radio display of file names and folder names is limited. For large numbers of files and/or folders, the radio may be unable to display the file name and folder name, and will assign a number instead. With a maximum number of files, exceeding 20 folders will result in this display. With 200 files, exceeding 50 folders will result in this display.)

- Maximum number of characters in file/folder names:
  - Level 1: 12 (including a separator "." and a three-character extension)
  - Level 2: 31 (including a separator "." and a three-character extension)

Multisession disc formats are supported by the radio. Multisession discs may contain combinations of normal CD audio tracks and computer files (including MP3 files). Discs created with an option such as "keep disc open after writing" are most likely multisession discs. The use of multisession for CD audio or MP3 playback may result in longer disc loading times.

Supported MP3 File Formats

The radio will recognize only files with the *.MP3 extension as MP3 files. Non-MP3 files named with the *.MP3 extension may cause playback problems. The radio is designed to recognize the file as an invalid MP3 and will not play the file.

When using the MP3 encoder to compress audio data to an MP3 file, the bit rate and sampling frequencies in the following table are supported. In addition, variable bit rates (VBR) are also supported. The majority of MP3 files use a 44.1 kHz sampling rate and a 192, 160, 128, 96 or VBR bit rate.

MPEG Specification	Sampling Frequency (kHz)	Bit Rate (kbps)
MPEG-1 Audio Layer 3	48, 44.1, 32	320, 256, 224, 192, 160, 128, 112, 96, 80, 64, 56, 48, 40, 32
MPEG-2 Audio Layer 3	24, 22.05, 16	160, 128, 144, 112, 96, 80, 64, 56, 48, 40, 32, 24, 16, 8

ID3 Tag information for artist, song title, and album title are supported for version 1 ID3 tags. ID3 version 2 is not supported by the radios.

Playlist files are not supported. MP3 Pro files are not supported.

Playback of MP3 Files

When a medium containing MP3 data is loaded, the radio checks all files on the medium. If the medium contains a lot of folders or files, the radio will take more time to start playing the MP3 files.

Loading times for playback of MP3 files may be affected by the following:

- Media - CD-RW media may take longer to load than CD-R media
- Medium formats - Multisession discs may take longer to load than non-multisession discs
- Number of files and folders - Loading times will increase with more files and folders

To increase the speed of disc loading, it is recommended to use CD-R media and single-session discs. To create a single-session disc, enable the “Disc at Once” option before writing to the disc.

Operation Instructions - Auxiliary Mode

The auxiliary (AUX) jack is an audio input jack, which allows the user to plug in a portable device, such as an MP3 player, or cassette player, and utilize the vehicle's audio system to amplify the source and play through the vehicle speakers.

Pressing the DISC/AUX button will change the mode to auxiliary device if the AUX jack is connected.

NOTE: The AUX device must be turned on and the device's volume set to proper level. If the AUX audio is not loud enough, turn the device's volume up. If the AUX audio sounds distorted, turn the device's volume down.

TIME Button (Auxiliary Mode)

Press this button to change the display to time of day. The time of day will display for five seconds (when ignition is OFF).

MEDIA CENTER 130 (RES/RSC) — AM/FM STEREO RADIO WITH CD PLAYER (MP3 AUX JACK) AND SIRIUS RADIO

NOTE: The radio sales code is located on the lower right side of the radio faceplate.

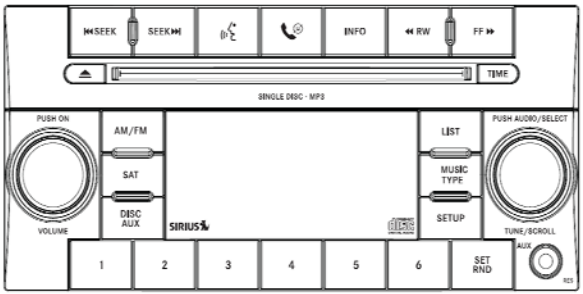

042305233

Media Center 130 (RES/RSC)

Operating Instructions — Radio Mode

NOTE: The ignition switch must be in the ON/RUN or ACC position to operate the radio.

Power Switch/Volume Control (Rotary)
Push the ON/VOLUME control knob to turn on the radio. Push the ON/VOLUME control knob a second time to turn off the radio.

Electronic Volume Control
The electronic volume control turns continuously (360 degrees) in either direction without stopping. Turning the ON/VOLUME control knob to the right increases the volume and to the left decreases it.

When the audio system is turned on, the sound will be set at the same volume level as last played.

SEEK Buttons
Press and release the SEEK buttons to search for the next listenable station in AM/FM mode. Press the right switch to seek up and the left switch to seek down. The radio will remain tuned to the new station until you make another selection. Holding either button will bypass stations without stopping until you release it.

Voice Command System (Radio) — If Equipped
Refer to "Voice Command" in the Uconnect™ User Manual located on the DVD for further details.

Voice Command Button Uconnect™ Phone — If Equipped
Press this button to operate the Uconnect™ Phone feature (if equipped). Refer to "Voice Command" in the Uconnect™ User Manual located on the DVD for further details.

If your vehicle is not equipped with or this feature is not available on your vehicle, a "Not Equipped With Uconnect" message will display on the radio screen.

Phone Button Uconnect™ Phone — If Equipped
Press this button to operate the Uconnect™ Phone feature (if equipped). Refer to "Uconnect™ Phone" in the Uconnect™ User Manual located on the DVD for further details.

If your vehicle is not equipped with or this feature is not available on your vehicle, a "Not Equipped With Uconnect" message will display on the radio screen.

TIME Button
Press the TIME button to alternate display of the time and radio frequency.

Clock Setting Procedure

1. Press and hold the TIME button until the hours blink.

2. Adjust the hours by turning the right side TUNE/SCROLL control knob.

3. After adjusting the hours, press the right side TUNE/SCROLL control knob to set the minutes. The minutes will begin to blink.

4. Adjust the minutes using the right side TUNE/SCROLL control knob. Press the TUNE/SCROLL control knob to save time change.

5. To exit, press any button/knob or wait five seconds.

The clock can also be set by pressing the SETUP button. For vehicles equipped with satellite radio, press the SETUP button, use the TUNE/SCROLL control to select SET CLOCK, and then follow the above procedure, starting at Step 2. For vehicles not equipped with satellite radio, press the SETUP button and then follow the above procedure, starting at Step 2.

INFO Button
Press the INFO button for an RDS station (one with call letters displayed). The radio will return a Radio Text message broadcast from an FM station (FM mode only).

RW/FF
Pressing the RW (Rewind) or FF (Fast Forward) buttons causes the tuner to search for the next frequency in the direction of the arrows. This feature operates in either AM or FM frequencies.

TUNE Control
Turn the rotary TUNE/SCROLL control knob clockwise to increase or counterclockwise to decrease the frequency.

Setting the Tone, Balance, and Fade
Push the rotary TUNE/SCROLL control knob and BASS will display. Turn the TUNE/SCROLL control knob to the right or left to increase or decrease the bass tones.

Push the rotary TUNE/SCROLL control knob a second time and MID will display. Turn the TUNE/SCROLL control knob to the right or left to increase or decrease the mid-range tones.

Push the rotary TUNE/SCROLL control knob a third time and TREBLE will display. Turn the TUNE/SCROLL control knob to the right or left to increase or decrease the treble tones.

Push the rotary TUNE/SCROLL control knob a fourth time and BALANCE will display. Turn the TUNE/SCROLL control knob to the right or left to adjust the sound level from the right or left side speakers.

Push the rotary TUNE/SCROLL control knob a fifth time and FADE will display. Turn the TUNE/SCROLL control knob to the left or right to adjust the sound level between the front and rear speakers.

Push the rotary TUNE/SCROLL control knob again to exit setting tone, balance, and fade.

MUSIC TYPE Button

Pressing this button once will turn on the Music Type mode for five seconds. Pressing the MUSIC TYPE button or turning the TUNE/SCROLL control knob within five seconds will allow the program format type to be selected. Many radio stations do not currently broadcast Music Type information.

Toggle the MUSIC TYPE button to select the following format types:

Program Type	16-Digit Character Display
No program type or undefined	None
Adult Hits	Adlt Hit
Classical	Classicl
Classic Rock	Cls Rock
College	College
Country	Country
Foreign Language	Language
Information	Inform
Jazz	Jazz
News	News
Nostalgia	Nostalga
Oldies	Oldies
Personality	Persnlty
Public	Public
Rhythm and Blues	R & B
Religious Music	Rel Musc
Religious Talk	Rel Talk
Rock	Rock

Program Type	16-Digit Character Display
Soft	Soft
Soft Rock	Soft Rck
Soft Rhythm and Blues	Soft R&B
Sports	Sports
Talk	Talk
Top 40	Top 40
Weather	Weather

By pressing the SEEK button when the Music Type icon is displayed, the radio will be tuned to the next frequency station with the same selected Music Type name. The Music Type function only operates when in the FM mode.

If a preset button is activated while in the Music Type (Program Type) mode, the Music Type mode will be exited and the radio will tune to the preset station.

SETUP Button

Pressing the SETUP button allows you to select between the following items:

- **Set Clock** — Pressing the SELECT button will allow you to set the clock. Adjust the hours by turning the TUNE/SCROLL control knob. After adjusting the hours, press the TUNE/SCROLL control knob to set the minutes. The minutes will begin to blink. Adjust the minutes using the right side TUNE/SCROLL control knob. Press the TUNE/SCROLL control knob to save time change.

AM/FM Button

Press the button to select either AM or FM mode.

SET/RND Button — To Set the Pushbutton Memory

When you are receiving a station that you wish to commit to pushbutton memory, press the SET/RND button. The symbol SET 1 will now show in the display

window. Select the button (1–6) you wish to lock onto this station and press and release that button. If a button is not selected within five seconds after pressing the SET/RND button, the station will continue to play but will not be stored into pushbutton memory.

You may add a second station to each pushbutton by repeating the above procedure with this exception: Press the SET/RND button twice and SET 2 will show in the display window. Each button can be set for SET 1 and SET 2 in both AM and FM. This allows a total of 12 AM and 12 FM stations to be stored into pushbutton memory. The stations stored in SET 2 memory can be selected by pressing the pushbutton twice.

Every time a preset button is used, a corresponding button number will display.

Buttons 1 - 6

These buttons tune the radio to the stations that you commit to pushbutton memory (12 AM and 12 FM stations).

DISC/AUX Button

Pressing the DISC/AUX button will allow you to switch from AM/FM modes to DISC/AUX mode.

Operation Instructions — CD MODE for CD and MP3 Audio Play

NOTE:

- The ignition switch must be in the ON/RUN or ACC position to operate the radio.
- This radio is capable of playing compact discs (CD), recordable compact discs (CD-R), rewritable compact discs (CD-RW), compact discs with MP3 tracks and multisession compact discs with CD and MP3 tracks.

Inserting Compact Disc(s)

Gently insert one CD into the CD player with the CD label facing up. The CD will automatically be pulled into the CD player and the CD icon will illuminate on the radio display. If a CD does not go into the slot more than 1.0 in (2.5 cm), a disc may already be loaded and must be ejected before a new disc can be loaded.

If you insert a disc with the ignition ON/RUN and the radio ON, the unit will switch from radio to CD mode and begin to play when you insert the disc. The display will show the track number, and index time in minutes and seconds. Play will begin at the start of track 1.

CAUTION!

- **This CD player will accept 4–3/4 in (12 cm) discs only. The use of other sized discs may damage the CD player mechanism.**

(Continued)

CAUTION! (Continued)

- **Do not use adhesive labels. These labels can peel away and jam the player mechanism.**
- **RES is a single CD player. Do not attempt to insert a second CD if one is already loaded.**
- **Dual-media disc types (one side is a DVD, the other side is a CD) should not be used, and they can cause damage to the player.**

4

EJECT Button - Ejecting a CD

Press the EJECT button to eject the CD.

If you have ejected a disc and have not removed it within 10 seconds, it will be reloaded. If the CD is not removed, the radio will reinsert the CD but will not play it.

A disc can be ejected with the radio and ignition OFF.

NOTE: Ejecting with the ignition OFF is not allowed on convertible or soft-top models (if equipped).

SEEK Button
Press the right SEEK button for the next selection on the CD. Press the left SEEK button to return to the beginning of the current selection, or return to the beginning of the previous selection if the CD is within the first second of the current selection. Pressing and holding the SEEK button will allow faster scrolling through the tracks in CD and MP3 modes.

TIME Button
Press this button to change the display from a large CD playing time display to a small CD playing time display.

RW/FF
Press and hold FF (Fast Forward) and the CD player will begin to fast forward until FF is released or RW or another CD button is pressed. The RW (Reverse) button works in a similar manner.

AM/FM Button
Press the button to select either AM or FM mode.

SET/RND Button (Random Play Button)
Press this button while the CD is playing to activate Random Play. This feature plays the selections on the compact disc in random order to provide an interesting change of pace.

Press the right SEEK button to move to the next randomly selected track.

Press the SET/RND button a second time to stop Random Play.

Notes On Playing MP3 Files

The radio can play MP3 files; however, acceptable MP3 file recording media and formats are limited. When writing MP3 files, pay attention to the following restrictions.

Supported Media (Disc Types)
The MP3 file recording media supported by the radio are CDDA, CD-R, CD-RW, MP3, and CDDA+MP3.

Supported Medium Formats (File Systems)
The medium formats supported by the radio are ISO 9660 Level 1 and Level 2 and includes the Joliet extension. When reading discs recorded using formats other than ISO 9660 Level 1 and Level 2, the radio may fail to read files properly and may be unable to play the file normally. UDF and Apple HFS formats are not supported.

The radio uses the following limits for file systems:

- Maximum number of folder levels: 8
- Maximum number of files: 255
- Maximum number of folders. (The radio display of file names and folder names is limited. For large numbers of files and/or folders, the radio may be unable to display the file name and folder name and will assign a number instead. With a maximum number of files, exceeding 20 folders will result in this display. With 200 files, exceeding 50 folders will result in this display.)
- Maximum number of characters in file/folder names:
  - Level 1: 12 (including a separator "." and a three-character extension)
  - Level 2: 31 (including a separator "." and a three-character extension)

Multisession disc formats are supported by the radio. Multisession discs may contain combinations of normal CD audio tracks and computer files (including MP3 files). Discs created with an option such as "keep disc open after writing" are most likely multisession discs. The use of multisession for CD audio or MP3 playback may result in longer disc loading times.

Supported MP3 File Formats

The radio will recognize only files with the *.MP3 extension as MP3 files. Non-MP3 files named with the *.MP3 extension may cause playback problems. The radio is designed to recognize the file as an invalid MP3 and will not play the file.

When using the MP3 encoder to compress audio data to an MP3 file, the bit rate and sampling frequencies in the following table are supported. In addition, variable bit rates (VBR) are also supported. The majority of MP3 files use a 44.1 kHz sampling rate and a 192, 160, 128, 96 or VBR bit rates.

MPEG Specification	Sampling Frequency (kHz)	Bit Rate (kbps)
MPEG-1 Audio Layer 3	48, 44.1, 32	320, 256, 224, 192, 160, 128, 112, 96, 80, 64, 56, 48, 40, 32
MPEG-2 Audio Layer 3	24, 22.05, 16	160, 128, 144, 112, 96, 80, 64, 56, 48, 40, 32, 24, 16, 8

ID3 Tag information for artist, song title, and album title are supported for version 1 ID3 tags. ID3 version 2 is not supported by the radios.

Playlist files are not supported. MP3 Pro files are not supported.

Playback of MP3 Files

When a medium containing MP3 data is loaded, the radio checks all files on the medium. If the medium contains a lot of folders or files, the radio will take more time to start playing the MP3 files.

Loading times for playback of MP3 files may be affected by the following:

- Media - CD-RW media may take longer to load than CD-R media
- Medium formats - Multisession discs may take longer to load than non-multisession discs
- Number of files and folders - Loading times will increase with more files and folders

To increase the speed of disc loading, it is recommended to use CD-R media and single-session discs. To create a single-session disc, enable the "Disc at Once" option before writing to the disc.

LIST Button (CD Mode for MP3 Play)

Pressing the LIST button will bring up a list of all folders on the disc. Scrolling up or down the list is done by turning the TUNE/SCROLL control knob. Selecting a folder by pressing the TUNE/SCROLL control knob will begin playing the files contained in that folder (or the next folder in sequence if the selection does not contain playable files).

The folder list will time out after five seconds.

INFO Button (CD Mode for MP3 Play)

Pressing the INFO button repeatedly will scroll through the following TAG information: Song Title, Artist, File Name, and Folder Name (if available).

Press the INFO button once more to return to "elapsed time" priority mode.

Press and hold the INFO button for three seconds or more and the radio will display song titles for each file.

Press and hold the INFO button again for three seconds to return to "elapsed time" display.

Operation Instructions - Auxiliary Mode

The auxiliary (AUX) jack is an audio input jack which allows the user to plug in a portable device such as an MP3 player or cassette player and utilize the vehicle's audio system to amplify the source and play through the vehicle speakers.

Pressing the AUX button will change the mode to auxiliary device if the AUX jack is connected.

NOTE: The AUX device must be turned on and the device's volume set to the proper level. If the AUX audio is not loud enough, turn the device's volume up. If the AUX audio sounds distorted, turn the device's volume down.

TIME Button (Auxiliary Mode)

Press this button to change the display to time of day. The time of day will display for five seconds (when the ignition is OFF).

Operating Instructions - Uconnect™ Phone (If Equipped)

Refer to "Uconnect™ Phone" in the Uconnect™ User Manual located on the DVD for further details.

Operating Instructions - Uconnect™ Multimedia (Satellite Radio) (If Equipped)

Refer to "Uconnect™ Multimedia (Satellite Radio)" in the Uconnect™ User Manual located on the DVD for further details.

UNIVERSAL CONSUMER INTERFACE (UCI) 0.5 — IF EQUIPPED

NOTE: This section is for sales code RES and REQ/REL/RET radios only with Uconnect™. For sales code RER, RBZ, REN, REP, REW, RB2 or REZ touch-screen radio UCI feature, refer to the separate RER, REN, RBZ, RB2 or REZ User's Manual. UCI is available only if equipped as an option with these radios.

This feature allows an iPod® to be plugged into the vehicle's sound system through a 16–pin connector, using the provided interface cable.

UCI supports Mini, 4G, Photo, Nano, 5G iPod® and iPhone® devices. Some iPod® software versions may not fully support the UCI features. Please visit Apple's website for software updates.

NOTE:

- If the radio has a USB port, connecting an iPod® to this port does not play the media. For playing an iPod®, use the separate 16–pin connector port (in the glove compartment on some vehicles).
- Connecting an iPod® to the AUX port located in the radio faceplate, plays media, but does not use the UCI feature to control the connected device.

Connecting The iPod®

Use the provided connection cable to connect an iPod® to the vehicle's 16–pin connector port (which is located in the glove compartment on some vehicles). Once the iPod® is connected and synchronized to the vehicle's UCI system (iPod® may take a few seconds to connect), the iPod® starts charging and is ready for use by pressing radio switches, as described below.

NOTE:

- It may be necessary to remove the connector pin protection cap from the 16–pin connector port, prior to connecting the cable.
- If the iPod® battery is completely discharged, it may not communicate with the UCI system until a minimum charge is attained. Leaving the iPod® connected to the UCI system may charge it to the required level.

Using This Feature

By using the provided connection cable to connect an iPod® to the vehicle's UCI 16–pin connector port:

- The iPod® audio can be played on the vehicle's sound system, providing metadata (artist, track title, album, etc.) information on the radio display.
- The iPod® can be controlled using the radio buttons to Play, Browse, and List the iPod® contents.
- The iPod® battery charges when plugged into the UCI connector (if supported by the specific iPod® device)

Controlling The iPod® Using Radio Buttons

To get into the UCI (iPod®) mode and access a connected iPod®, press the "AUX" button on the radio faceplate. Once in the UCI (iPod®) mode, iPod® audio tracks (if available from iPod®) start playing over the vehicle's audio system.

Play Mode

When switched to UCI mode, the iPod® automatically starts Play mode. In Play mode, use the following buttons on the radio faceplate to control the iPod® and display data:

- Use the TUNE control knob to select the next or previous track.
  - Turning it clockwise (forward) by one click, while playing a track, skips to the next track.
  - Turning it counterclockwise (backward) by one click, during the first two seconds of the track, will

jump to the previous track in the list. Turning this button at any other time in the track, will jump to the beginning of the current track.

- Jump backward in the current track by pressing and holding the << **RW** button. Holding the << **RW** button long enough will jump to the beginning of the current track.

- Jump forward in the current track by pressing and holding the **FF** >> button.
- A single press backward << **RW** or forward **FF** >> will jump backward or forward respectively, for five seconds.
- Use the << **SEEK** and **SEEK** >> buttons to jump to the previous or next track. If the << **SEEK** button is pressed during the first two seconds of the track, it will jump to the previous track in the list; pressing this button at any other time in the track, it will jump to the beginning of the track. Pressing the **SEEK** >> button during play mode, it will jump to the next track in the list.
- While a track is playing, press the **INFO** button to see the associated metadata (artist, track title, album, etc.) for that track. Pressing the **INFO** button again jumps to the next screen of data for that track. Once all screens have been viewed, the last **INFO** button press will go back to the play mode screen on the radio.
- Pressing the **REPEAT** button will change the iPod® mode to repeat the current playing track.
- Press the **SCAN** button to use iPod® scan mode, which will play the first five seconds of each track in the current list and then forward to the next song. To stop SCAN mode and start playing the desired track, when it is playing the track, press the **SCAN** button again. During Scan mode, pressing the << **SEEK** and **SEEK** >> buttons will select the previous and next tracks.

- **RND** button (available on sales code RES radio only): Pressing this button toggles between Shuffle ON and Shuffle OFF modes for the iPod®. If the **RND** icon is showing on the radio display, then the shuffle mode is ON.

List Or Browse Mode

During Play mode, pressing any of the buttons described below, will bring up List mode. List mode enables scrolling through the list of menus and tracks on the iPod®.

- **TUNE** control knob: The **TUNE** control knob functions in a similar manner as the scroll wheel on the iPod®.
  - Turning it clockwise (forward) and counterclockwise (backward) scrolls through the lists, displaying the track detail on the radio display. Once the track to be played is highlighted on the radio display, press the **TUNE** control knob to select and start playing the track. Turning the **TUNE** control knob fast will scroll through the list faster. During fast scroll, a slight delay in updating the information on the radio display may be noticed.
- During all List modes, the iPod® displays all lists in "wrap-around" mode. So if the track is at the bottom of the list, just turn the wheel backwards (counter-clockwise) to get to the track faster.
- In List mode, the radio **PRESET** buttons are used as shortcuts to the following lists on the iPod®.
  - Preset 1 – Playlists
  - Preset 2 – Artists
  - Preset 3 – Albums
  - Preset 4 – Genres
  - Preset 5 – Audiobooks
  - Preset 6 – Podcasts

- Pressing a PRESET button will display the current list on the top line and the first item in that list on the second line.
- To Exit List mode without selecting a track, press the same **PRESET** button again to go back to **Play mode**.

- **LIST** button: The **LIST** button will display the top level menu of the iPod®. Turn the **TUNE** control knob to list the top-menu item to be selected and press the **TUNE** control knob. This will display the next sub-menu list item on the iPod® then follow the same steps to go to the desired track in that list. Not all iPod® sub-menu levels are available on this system.
- **MUSIC TYPE** button: The **MUSIC TYPE** button is another shortcut button to the genre listing on your iPod®.

CAUTION!

- **Leaving the iPod® (or any supported device) anywhere in the vehicle in extreme heat or cold can alter the operation or damage the device. Follow the device manufacturer's guidelines.**
- **Placing items on the iPod®, or connections to the iPod® in the vehicle, can cause damage to the device and/or to the connectors.**

WARNING!

Do not plug in or remove the iPod® while driving. Failure to follow this warning could result in an accident.

Uconnect™ Multimedia (SATELLITE RADIO) — IF EQUIPPED (REN/RER/RBZ/RES RADIOS ONLY)

Satellite radio uses direct satellite-to-receiver broadcasting technology to provide clear digital sound, coast to coast. The subscription service provider is Sirius Satellite Radio. This service offers over 130 channels of music, sports, news, entertainment, and programming for children, directly from its satellites and broadcasting studios.

NOTE: Sirius service is not available in Hawaii and has limited coverage in Alaska.

System Activation

Sirius Satellite Radio service is pre-activated, and you may begin listening immediately to the one year of audio service that is included with the factory-installed satellite radio system in your vehicle. Sirius will supply a welcome kit that contains general information, including how to setup your on-line listening account. For further information, call the toll-free number 888-539-7474, or visit the Sirius web site at www.sirius.com, or at www.siriuscanada.ca for Canadian residents.

Electronic Serial Number/Sirius Identification Number (ESN/SID)

Please have the following information available when calling:

1. The Electronic Serial Number/Sirius Identification Number (ESN/SID).

2. Your Vehicle Identification Number.

To access the ESN/SID, refer to the following steps:

ESN/SID Access With RES Radios

With the ignition switch in the ON/RUN or ACC position and the radio on, press the SETUP button and scroll using the TUNE/SCROLL control knob until Sirius ID is selected. Press the TUNE/SCROLL control knob and the

Sirius ID number will display. The Sirius ID number display will time out in two minutes. Press any button on the radio to exit this screen.

ESN/SID Access With REN/RER/RBZ Radios
While in SAT mode, press the MENU button on the radio faceplate.

Next, touch the SUBSCRIPTION tab on the touch screen. All the ESNs that apply to your vehicle will display.

Selecting Uconnect™ Multimedia (Satellite) Mode

Press the SAT button until "SAT" appears in the display. A CD may remain in the radio while in the Satellite radio mode.

Satellite Antenna

To ensure optimum reception, do not place items on the roof around the rooftop antenna location. Metal objects placed within the line of sight of the antenna will cause decreased performance. Larger luggage items such as bikes should be placed as far rearward as possible, within the loading design of the rack. Do not place items directly on or above the antenna.

Reception Quality

Satellite reception may be interrupted due to one of the following reasons:

- The vehicle is parked in an underground parking structure or under a physical obstacle.
- Dense tree coverage may interrupt reception in the form of short audio mutes.
- Driving under wide bridges or along tall buildings can cause intermittent reception.
- Placing objects over or too close to the antenna can cause signal blockage.

Operating Instructions - Uconnect™ Multimedia (Satellite) Mode

NOTE: The ignition switch must be in the ON or ACC position to operate the radio.

SEEK Buttons
Press and release the SEEK buttons to search for the next channel in Satellite mode. Press the right switch to seek up and the left switch to seek down. The radio will remain tuned to the new channel until you make another selection. Holding either button will bypass channels without stopping until you release it.

SCAN Button
Pressing the SCAN button causes the tuner to search for the next channel, pausing for eight seconds before continuing to the next. To stop the search, press the SCAN button a second time.

INFO Button
Pressing the INFO button will cycle the display information between Artist, Song Title, and Composer (if available). Also, pressing and holding the INFO button for an additional three seconds will make the radio display the Song Title all of the time (press and hold again to return to normal display).

RW/FF
Pressing the RW (Rewind) or FF (Fast Forward) buttons causes the tuner to search for the next channel in the direction of the arrows.

TUNE Control (Rotary)
Turn the rotary TUNE/SCROLL control knob clockwise to increase or counterclockwise to decrease the channel.

MUSIC TYPE Button

Pressing this button once will turn on the Music Type mode for five seconds. Pressing the MUSIC TYPE button or turning the TUNE/SCROLL control knob within five seconds will allow the program format type to be selected.

Toggle the MUSIC TYPE button again to select the music type.

By pressing the SEEK button when the Music Type function is active, the radio will be tuned to the next channel with the same selected Music Type name.

If a preset button is activated while in the Music Type (Program Type) mode, the Music Type mode will be exited and the radio will tune to the preset channel.

SETUP Button

Pressing the SETUP button allows you to select the following items:

- Display Sirius ID number — Press the AUDIO/SELECT button to display the Sirius ID number. This number is used to activate, deactivate, or change the Sirius subscription.

SET Button – To Set the Pushbutton Memory

When you are receiving a channel that you wish to commit to pushbutton memory, press the SET button. The symbol SET 1 will now show in the display window. Select the button (1-6) you wish to lock onto this channel and press and release that button. If a button is not selected within five seconds after pressing the SET button, the channel will continue to play but will not be stored into pushbutton memory.

You may add a second channel to each pushbutton by repeating the above procedure with this exception: Press the SET button twice and SET 2 will show in the display window. Each button can be set for SET 1 and SET 2. This allows a total of 12 Satellite channels to be stored into

pushbutton memory. The channels stored in SET 2 memory can be selected by pressing the pushbutton twice.

Every time a preset button is used, a corresponding button number will display.

Buttons 1 - 6
These buttons tune the radio to the channels that you commit to pushbutton memory (12 Satellite stations).

Operating Instructions - Uconnect™ Phone (If Equipped)

Refer to "Uconnect™ Phone" in the Uconnect™ User Manual located on the DVD for further details.

Uconnect™ Multimedia (SIRIUS BACKSEAT TV™) — IF EQUIPPED

Satellite video uses direct satellite receiver broadcasting technology to provide streaming video. The subscription service provider is SIRIUS Satellite Radio. SIRIUS Backseat TV™ offers three video channels for family entertainment, directly from its satellites and broadcasting studios.

NOTE: SIRIUS service is not available in Hawaii or Canada and has limited coverage in Alaska.

Refer to your Video Entertainment System (VES)™, RER Navigation, RBZ Multimedia or REN Multimedia User Manuals for detailed operating instructions.

VIDEO ENTERTAINMENT SYSTEM (VES)™ — IF EQUIPPED

The optional Video Entertainment System (VES)™ is available with:

- One or two video screens
- Third row swivel screen — If Equipped

- Additional single-disc DVD player with two-screen system
- Battery-powered two-channel remote control
- Two remote headphones
- Integrated remote storage in either screen location
- Three different medias can be played simultaneously (Cabin speakers and Headphone Channels 1 and 2)
- Easy menu-driven functions on touch-screen radios
- Video and audio input jacks available in rear seating area
- Ten different medias to choose from in each screen (AM, FM, Sirius Radio, Sirius Backseat TV™, DVD1, DVD2, Hard Disc Drive (HDD), AUX in radio, AUX1, AUX2)

The LCD screen(s) are located in the overhead compartment console.

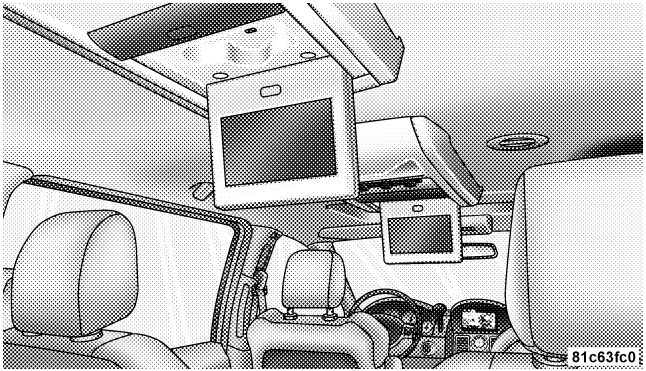

Overhead Video Screens

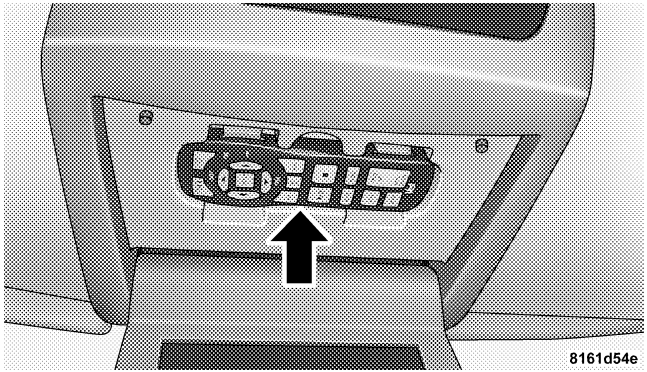

VES™ Remote Control Location

NOTE: Refer to the "Uconnect™ Multimedia" section of Uconnect™ User Manual located on the DVD for further details.

REMOTE SOUND SYSTEM CONTROLS — IF EQUIPPED

Remote Sound System Controls (Back View Of Steering Wheel)

The remote sound system controls are located on the rear surface of the steering wheel, at the three and nine o'clock positions.

The right-hand rocker switch has a pushbutton in the center, and controls the volume and mode of the sound system. Pressing the top of the rocker switch will increase the volume. Pressing the bottom of the rocker switch will decrease the volume. Pressing the center button changes the operation of the radio from AM to FM, or Tape to CD mode, depending on which radio is in the vehicle.

The left-hand rocker switch has a pushbutton in the center. The function of the left-hand switch is different, depending on which mode you are in.

The following describes the left-hand rocker switch operation in each mode.

Radio Operation

Pressing the top of the switch will SEEK up for the next listenable station, and pressing the bottom of the switch will SEEK down for the next listenable station.

The button located in the center of the left-hand switch will tune to the next preset station that you have programmed in the radio preset pushbutton.

CD Player

Pressing the top of the switch once will go to the next track on the CD. Pressing the bottom of the switch once will go to the beginning of the current track, or to the beginning of the previous track if it is within one second after the current track begins to play.

If you press the switch up or down twice it plays the second track; three times, it will play the third, etc.

The button in the center of the left-hand switch has no function in this mode.

CD/DVD DISC MAINTENANCE

To keep a CD/DVD in good condition, take the following precautions:

1. Handle the disc by its edge; avoid touching the surface.

2. If the disc is stained, clean the surface with a soft cloth, wiping from center to edge.

3. Do not apply paper or tape to the disc; avoid scratching the disc.

4. Do not use solvents such as benzene, thinner, cleaners, or anti-static sprays.

5. Store the disc in its case after playing.

6. Do not expose the disc to direct sunlight.

7. Do not store the disc where temperatures may become too high.

NOTE: If you experience difficulty in playing a particular disc, it may be damaged (i.e., scratched, reflective coating removed, a hair, moisture or dew on the disc) oversized, or have protection encoding. Try a known good disc before considering disc player service.

RADIO OPERATION AND CELLULAR PHONES

Under certain conditions, the cellular phone being on in your vehicle can cause erratic or noisy performance from your radio. This condition may be lessened or eliminated by relocating the cellular phone antenna. This condition is not harmful to the radio. If your radio performance does not satisfactorily “clear” by the repositioning of the antenna, it is recommended that the radio volume be turned down or off during cellular phone operation.

CLIMATE CONTROLS

The Climate Control System allows you to regulate the temperature, amount, and direction of air circulating throughout the vehicle. The controls are located on the instrument panel, below the radio.

Manual Heating and Air Conditioning System — If Equipped

The controls for the manual system in this vehicle contain a series of outer rotary dials and inner push knobs. These comfort controls can be set to obtain desired interior conditions.

045607574

Manual Temperature Control

Front Blower Control

Mode Control (Air Direction)

Mode control allows you to choose from several selections of air distribution. You can select either a primary mode, as identified by the symbols, or a blend of two of these modes. The closer the control is to a particular mode, the more air distribution you receive from that mode.

Panel Mode

Air is directed through the outlets in the instrument panel. These outlets can be adjusted for direction, and turned on or off to control airflow.

NOTE: For maximum airflow to the rear, the center instrument panel outlets can be directed toward the rear seat passengers.

Bi-Level Mode

Air is directed through the panel and floor outlets.

NOTE: There is a difference in temperature (in any conditions other than full cold or full hot), between the upper and lower outlets for added comfort. The warmer air goes to the floor outlets. This feature gives improved comfort during sunny but cool conditions.

Floor Mode

Air is directed through the floor outlets with a small amount through the defrost and side window demist outlets.

Mix Mode

Air is directed through the floor, defrost and side window demist outlets. This setting works best in cold or snowy conditions that require extra heat at the windshield. This setting is good for maintaining comfort, while reducing moisture on the windshield.

Defrost Mode

Air is directed through the windshield and side window demist outlets. Use DEFROST mode with maximum blower and temperature settings for best windshield and side window defrosting.

NOTE: The air conditioning compressor operates in MIX and DEFROST, or a blend of these modes even if the A/C button is not pressed. This dehumidifies the air to help dry the windshield. To improve fuel economy, use these modes only when necessary.

Recirculation Control

Press this button to choose between outside air intake or recirculation of the air inside the vehicle. A lamp will illuminate when you are in RECIRCULATION mode. Only use the RECIRCULATION mode to temporarily block out any outside odors, smoke, or dust, and to cool the interior rapidly upon initial start-up in very hot or humid weather.

NOTE:

- If the RECIRCULATION button is pressed when the system is in MIX, DEFROST, or FLOOR mode the RECIRCULATION LED indicator will flash 3 times to indicate RECIRCULATION mode is not allowed.
- Continuous use of the RECIRCULATION mode may make the inside air stuffy and window fogging may occur. Extended use of this mode is not recommended.
- In cold or damp weather, the use of the RECIRCULATION mode will cause windows to fog on the inside because of moisture buildup inside the vehicle. For maximum defogging, select the outside air position.
- In order to prevent fogging, when the RECIRCULATION button is pressed and the mode control is set to PANEL, the A/C will engage automatically.
- The A/C can be deselected manually without disturbing the mode control selection.

Economy Mode

If ECONOMY mode is desired, press the A/C button to turn off the indicator light and the A/C compressor. Rotate the temperature control knob to the desired temperature.

Air Conditioning Operation

Push on this button to engage the Air Conditioning (A/C). A light will illuminate when the A/C System is engaged.

NOTE: The air conditioning compressor will not engage until the engine has been running for about 10 seconds.

Max A/C

For maximum cooling use the A/C and RECIRCULATION mode buttons at the same time.

Three-Zone Temperature Control — If Equipped

With the Three-Zone Temperature Control System, each front seat occupant can independently control the Heating, Ventilation, and Air Conditioning operations coming from the outlets on their side of the vehicle.

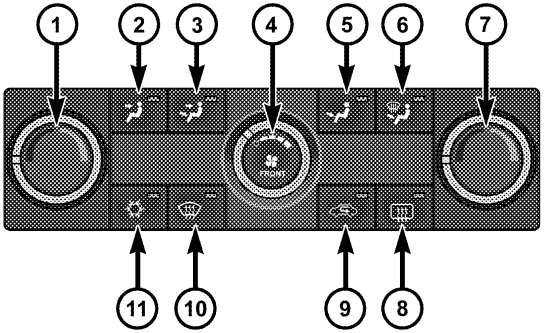

045605996

Front Upper Three Zone Temperature Control

1 – Left Temperature
2 – PANEL
3 – BI-LEVEL
4 – Front Blower
5 – FLOOR
6 – MIX
7 – Right Temperature
8 – Rear DEFROST
9 – RECIRCULATION
10 – Front DEFROST
11 – Air Conditioning (A/C)

The Three-Zone Temperature Control bottom panel controls rear Heating, Ventilation, and Air Conditioning operations.

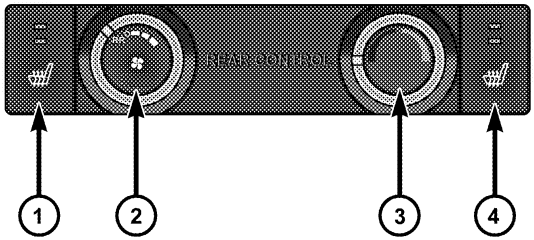

045605995

Front Lower Three-Zone Temperature Control Features

1 – Left Heated Seat
2 – Rear Blower
3 – Rear Temperature
4 – Right Heated Seat

The primary control for the rear blower is on the front climate control unit located on the instrument panel. When the front control is in any position other than rear, the front control operates all the rear functions.

The Three-Zone Temperature Control bottom panel has five positions; off, rear, and a range of blower speeds. Only when the primary control for the rear blower is in the rear (RR) position do the second row seat occupants have control of the rear blower speed.

The rear airflow modes will mirror the front unit operation. Rear PANEL mode is automatically selected when the front control is in the PANEL mode. When the front unit is in BI-LEVEL mode, airflow will be emitted from both the upper and lower rear outlets. When the front control is in FLOOR, DEFROST, or MIX modes, airflow will be directed out of the rear floor outlets.

NOTE: For vehicles equipped with Remote Start, the climate controls will not function during Remote Start operation if the blower control is left in the "O" (Off) position.

Rear Manual Climate Control — If Equipped

The Rear Manual Climate Control system has floor air outlets at the rear of the right side sliding door, and overhead outlets at each outboard rear seating position. The unit provides warm or cool air through the floor and upper outlets.

The rear blower and temperature controls for the rear seat passengers are located in the headliner, near the center of the vehicle.

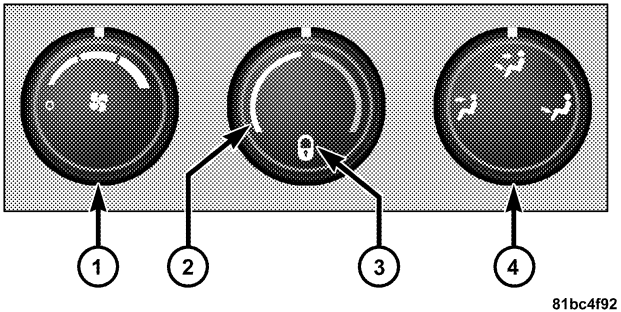

Rear Manual Climate Controls

1 – Rear Blower	3 – Rear Climate Control Lock
2 – Rear Temperature	4 – Rear MODE

Rear Blower Control

The primary control for the rear blower is on the front climate control unit, located on the instrument panel.

Only when the front control for the rear blower is in the **RR** position do the second row seat occupants have control of the rear blower speed.

The rear blower control, located in the rear overhead console, has an off position and a range of blower speeds. This allows the second row seat occupants to control the volume of air circulated in the rear of the vehicle.

CAUTION!

Interior air enters the Rear Manual Climate Control system through an intake grille, located in the right side trim panel behind the third row seats. The heater outlets are located in the right side trim panel, just behind the sliding door. Do not block or place objects directly in front of the inlet grille or heater outlets. The electrical system could overload, causing damage to the blower motor.

Rear Temperature Control

The rear mode selection **RR,** allows the settings to be controlled by the rear mode control knob.

To change the temperature in the rear of the vehicle, rotate the temperature control knob counterclockwise for cold air, and clockwise for heated air.

When rear controls are locked by the front system, the lock symbol on the temperature knob is illuminated, and the rear overhead adjustments are inoperable.

Rear Mode Control

Headliner Mode

Air comes from the outlets in the headliner. Each of these outlets can be individually adjusted to direct the flow of air. Moving the air vanes of the outlets to one side will shut off the airflow.

Bi-Level Mode

Air comes from both the headliner outlets and the floor outlets.

NOTE: In many temperature positions, the BI-LEVEL mode is designed to provide cooler air out of the headliner outlets and warmer air from the floor outlets.

Floor Mode

Air comes from the floor outlets.

Automatic Temperature Control (ATC) — If Equipped

- Front Three-Zone ATC allows both driver and front passenger seat occupant, and rear seat occupants to select individual comfort settings.
- Occupants in the vehicle select AUTO mode operation by a button press on the right rotary knob and a comfort temperature setting using rotary knobs on the control unit.
- The system can be controlled manually, if desired.
- SYNC feature links the controls for all three zones, allowing one comfort setting (driver setting) for the cabin, if desired.

The Three-Zone ATC System automatically maintains the interior comfort level desired by the driver and all passengers. The system automatically adjusts the air temperature, the airflow volume, amount of outside air recirculation and the airflow direction. This maintains a comfortable temperature, even under changing conditions.

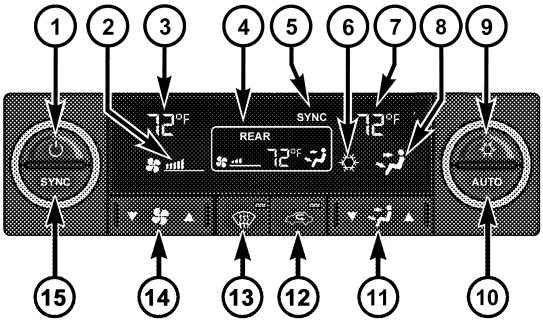

045605176

Front Upper ATC Panel

1 - System On/Off
2 - Blower Indicator
3 - Left Front Temperature
4 - Rear Blower / Temperature / Mode
5 - SYNC Indicator
6 - A/C Indicator
7 - Right Front Temperature
8 - Front MODE Indicator
9 - Air Conditioning (A/C) On/Off
10 - AUTO Mode / Blower
11 - Front MODE
12 - RECIRCULATE
13 - Front DEFROST
14 - Front Blower Speed
15 - SYNC

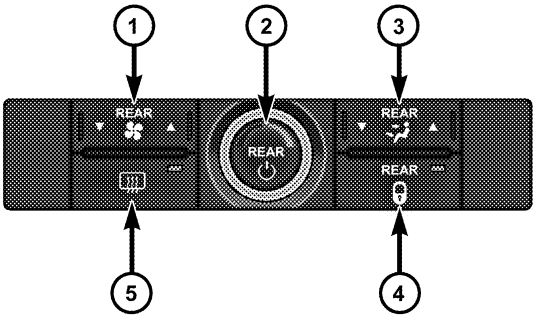

81dc95d4

Front Lower ATC Panel

1 - Rear Blower Speed
2 - Rear Temperature / Rear System On/Off
3 - Rear MODE
4 - Rear ATC Lock
5 - Rear DEFROST

Automatic Operation

1. Press the AUTO button on the Front Upper ATC Panel and the word AUTO will illuminate in the front ATC display, along with three temperatures for driver, front passenger, and rear seats. The system will then automatically regulate the amount of airflow.

2. Next, adjust the temperature you would like the system to maintain, by adjusting the driver, front passenger, and rear seat rotary temperature knobs. Once the desired temperature is displayed, the system will achieve and automatically maintain that comfort level.

3. When the system is set up for your comfort level, it is not necessary to change the settings. You will experience the greatest efficiency by simply allowing the system to function automatically.

NOTE:

- It is not necessary to move the temperature settings for cold or hot vehicles. The system automatically adjusts the temperature, mode and fan speed to provide comfort as quickly as possible.
- The temperature can be displayed in English or Metric units by selecting the "Display Units of Measure in" customer-programmable feature. Refer to the "Electronic Vehicle Information Center (EVIC) — Customer-Programmable Features" in this Section.

To provide you with maximum comfort in the automatic mode, during cold start-ups, the blower fan will remain on low and the DELAY symbol will appear in the front ATC display, until the engine warms up. The fan will engage immediately if the DEFROST mode is selected, or by pressing the Front Upper ATC Panel blower rocker button and setting the fan to any fixed blower speed.

Manual Operation

This system offers a full complement of manual override features. The AUTO symbol in the front ATC display will be turned off when the system is being used in the manual mode.

NOTE: Each of these features operate independently from each other. If any one feature is controlled manually, the temperature doors will continue to operate automatically.

The blower fan speed can be set to any fixed speed by pressing the Front Upper ATC Panel blower rocker button. The fan will now operate at a fixed speed until additional speeds are selected. This allows the front occupants to control the volume of air circulated in the vehicle and cancel the AUTO mode.

The operator can also select the direction of the airflow by selecting one of the following positions.

Panel Mode

Air is directed through the outlets in the instrument panel. These outlets can be adjusted for direction, and turned on or off to control airflow.

NOTE: For maximum airflow to the rear, the center instrument panel outlets can be directed toward the rear seat passengers.

Bi-Level Mode

Air comes from the instrument panel outlets, floor outlets and defrost outlets. A slight amount of air is also directed through the side window demister outlets.

NOTE: In many temperature positions, the BI-LEVEL mode is designed to provide cooler air out of the panel outlets and warmer air from the floor outlets.

Floor Mode

Air comes from the floor outlets. A slight amount of air is directed through the defrost and side window demister outlets.

Mix Mode

Air comes from the floor, defrost and side window demist outlets. This mode works best in cold or snowy conditions. It allows you to stay comfortable, while keeping the windshield clear.

Defrost Mode

Air comes from the windshield and side window demist outlets. Use DEFROST mode with maximum blower and temperature settings for best windshield and side window defrosting.

NOTE: While operating in the other modes, the system will not automatically sense the presence of fog, mist or ice on the windshield. DEFROST mode must be manually selected to clear the windshield and side glass.

The SNOWFLAKE mode, or A/C button, allows the operator to manually activate or deactivate the air conditioning system. When in SNOWFLAKE mode, and the ATC display is on cool, dehumidified air flows through the air outlets. If ECONOMY mode is desired, press the SNOWFLAKE button to turn off the SNOWFLAKE mode in the ATC display, and deactivate the A/C system.

NOTE:

- If the system is in Mix or Defrost Mode, the SNOWFLAKE can be turned off, but the A/C system shall remain active to prevent fogging of the windows.
- If fog or mist appears on the windshield or side glass, select DEFROST mode and increase blower speed.

Recirculation Control

When outside air contains smoke, odors, or high humidity, or if rapid cooling is desired, you may wish to recirculate interior air by pressing the RECIRCULATION mode control button. RECIRCULATION mode should only be used temporarily. The recirculation symbol will illuminate in the display when this button is selected. Push the button a second time to turn off the RECIRCULATION mode LED and allow outside air into the vehicle.

NOTE: In cold weather, use of the RECIRCULATION mode may lead to excessive window fogging. The RECIRCULATION mode is not allowed in the FLOOR, MIX and DEFROST modes to improve window clearing operation. Recirculation will be disabled automatically if these modes are selected.

Rear Automatic Temperature Control (ATC) — If Equipped

The Rear ATC System has floor air outlets at the rear of the right side sliding door, and overhead outlets at each outboard rear seating position. The system provides heated air through the floor outlets or cool, dehumidified air through the headliner outlets.

The REAR SYSTEM control for the Rear ATC System is on the front lower ATC panel located on the instrument panel.

Pressing the REAR LOCK button for the Rear ATC System from the front lower ATC panel, illuminates a LOCK symbol in the rear display. The rear temperature and air source are controlled from the front lower ATC panel.

Rear second row occupants can only adjust the rear ATC control when the REAR LOCK button is turned off.

The Rear ATC System is located in the headliner, near the center of the vehicle.

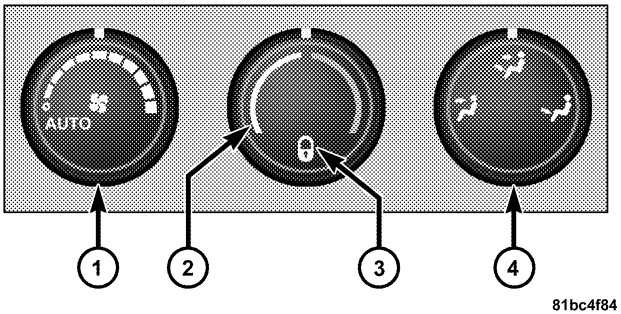

Rear ATC Control Features

1 - Blower Speed	3 - Rear ATC Lock
2 - Rear Temperature	4 - Rear MODE

1. Press the REAR LOCK button on the front lower ATC panel. This turns off the REAR LOCK icon in the rear temperature knob.

2. Rotate the Rear Blower, Rear Temperature and the Rear Mode Control knobs to suit your comfort needs.

3. ATC is selected by adjusting the rear blower knob counterclockwise to AUTO.

Once the desired temperature is displayed, the ATC System will automatically achieve and maintain that comfort level. When the system is set up for your comfort level, it is not necessary to change the settings. You will experience the greatest efficiency by simply allowing the system to function automatically.

NOTE:

- It is not necessary to move the temperature settings for cold or hot vehicles. The system automatically adjusts the temperature, mode and fan speed to provide comfort as quickly as possible.
- The temperature can be displayed in English or Metric units by selecting the "Display Units of Measure in" customer-programmable feature. Refer to the "Electronic Vehicle Information Center (EVIC) — Customer-Programmable Features" in this Section.

Rear Blower Control

The rear blower control knob can be manually set to off, or any fixed blower speed, by rotating the knob from low to high. This allows the rear seat occupants to control the volume of air circulated in the rear of the vehicle.

CAUTION!

Interior air enters the Rear Automatic Temperature Control System through an intake grille, located in the right side trim panel behind the third row seats. The heater outlets are located in the right side trim panel, just behind the sliding door. Do not block or place objects directly in front of the inlet grille or heater outlets. The electrical system could overload causing damage to the blower motor.

Rear Temperature Control

To change the temperature in the rear of the vehicle, rotate the temperature knob counterclockwise to lower the temperature, and clockwise to increase the temperature. The REAR temperature settings are displayed in the front upper ATC panel.

When rear controls are locked by the front system, the LOCK symbol on the temperature knob is illuminated and any rear overhead adjustments are ignored.

Rear Mode Control

Auto Mode
The rear system automatically maintains the correct mode and comfort level desired by the rear seat occupants.

Headliner Mode
Air comes from the outlets in the headliner. Each of these outlets can be individually adjusted to direct the flow of air. Moving the air vanes of the outlets to one side will shut off the airflow.

Bi-Level Mode
Air comes from both the headliner outlets and the floor outlets.

NOTE: In many temperature positions, the BI-LEVEL mode is designed to provide cooler air out of the headliner outlets and warmer air from the floor outlets.

Floor Mode
Air comes from the floor outlets.

Summer Operation

The engine cooling system in air conditioned vehicles must be protected with a high-quality antifreeze coolant to provide proper corrosion protection and to protect against engine overheating. A solution of 50% ethylene glycol antifreeze coolant and 50% water is recommended. Refer to “Maintenance Procedures” in “Maintaining Your Vehicle” for proper coolant selection.

Winter Operation

To ensure the best possible heater and defroster performance, make sure the engine cooling system is functioning properly and the proper amount, type, and concentration of coolant is used. Refer to "Maintenance Procedures" in "Maintaining Your Vehicle" for proper coolant selection. Use of the air RECIRCULATION mode during Winter months is not recommended, because it may cause window fogging.

Vacation/Storage

Before you store your vehicle, or keep it out of service (i.e., vacation) for two weeks or more, run the air conditioning system at idle for about five minutes, in fresh air with the blower setting on high. This will ensure adequate system lubrication to minimize the possibility of compressor damage when the system is started again.

Window Fogging

Vehicle windows tend to fog on the inside in mild, rainy and/or humid weather. To clear the windows, select DEFROST or MIX mode and increase the front blower speed. Do not use the RECIRCULATION mode without A/C for long periods, as fogging may occur.

Outside Air Intake

Make sure the air intake, located directly in front of the windshield, is free of obstructions such as leaves. Leaves collected in the air intake may reduce airflow, and if they enter the plenum they could plug the water drains. In Winter months make sure the air intake is clear of ice, slush and snow.

Operating Tips

WEATHER	CONTROL SETTINGS
Hot weather and vehicle interior is very hot	Set the mode control to , on, and blower on high. Roll down the windows for a minute to flush out the hot air. Once comfort is achieved adjust controls for comfort.
Warm weather	Turn on and set the mode control to the position.
Cool Sunny	Operate in position.
Cool & Humid conditions	Set the mode control to and turn on to keep windows clear.
Cold Weather	Set the mode control to the position. If windshield fogging starts to occur, move the control towards the position.

8000cb71

A/C Air Filter— If Equipped

On vehicles equipped with Automatic Temperature Control (ATC), the climate control system filters out dust and pollen from the air. Refer to “Air Conditioning” in “Maintaining Your Vehicle” for filter replacement instructions.

STARTING AND OPERATING

CONTENTS

■ Starting Procedures 327
- □ Automatic Transmission 327
- □ Normal Starting 327
- □ Extreme Cold Weather (Below −20°F Or –29°C) 328
- □ If The Engine Fails To Start 328
- □ After Starting 329

■ Engine Block Heater — If Equipped 329

■ Automatic Transmission 330
- □ Key Ignition Park Interlock 330
- □ Brake/Transmission Interlock System 331
- □ Four-Speed Or Six-Speed Automatic Transmission 331
- □ Gear Ranges 332

■ Driving On Slippery Surfaces 338
- □ Acceleration 338
- □ Traction 338

■ Driving Through Water 339
□ Flowing/Rising Water 339
□ Shallow Standing Water 339
■ Power Steering 341
□ Power Steering Fluid Check 342
■ Parking Brake 343
■ Anti-Lock Brake System (ABS) 345
□ Anti-Lock Brake Warning Light 347
■ Electronic Brake Control System 347
□ Traction Control System (TCS) 347
□ Brake Assist System (BAS) 349
□ Electronic Stability Program (ESP) 350
□ ESP/BAS Warning Light 351
■ Tire Safety Information 352
□ Tire Markings 352
□ Tire Identification Number (TIN) 355
□ Tire Terminology And Definitions 356
□ Tire Loading And Tire Pressure 357
■ Tires — General Information 361
□ Tire Pressure 361
□ Tire Inflation Pressures 362
□ Tire Pressures For High-Speed Operation . . 363
□ Radial-Ply Tires 364
□ Compact Spare Tire 364
□ Tire Spinning 365
□ Tread Wear Indicators 366

- Life Of Tire 367
- Replacement Tires 367

■ Snow Tires 368

■ Tire Rotation Recommendations 369

■ Tire Pressure Monitor System (TPMS) 370

- Base System 372
- Premium System – If Equipped 374

■ Fuel Requirements 378

- 3.3L And 3.8L Engine 378
- 4.0L Engine 379
- Reformulated Gasoline 379
- Gasoline/Oxygenate Blends 380
- E85 Usage In Non-Flex Fuel Vehicles 380
- MMT In Gasoline 381
- Materials Added To Fuel 381
- Fuel System Cautions 382
- Carbon Monoxide Warnings 383

■ Flexible Fuel (3.3L Engine Only) — If Equipped 383

- E85 General Information 383
- Ethanol Fuel (E85) 385
- Fuel Requirements 385
- Selection Of Engine Oil For Flexible Fuel Vehicles E85 And Gasoline Vehicles 386
- Starting 386
- Cruising Range 386
- Replacement Parts 387

□ Maintenance 387
■ Adding Fuel 387
□ Fuel Filler Cap (Gas Cap) 387
□ Loose Fuel Filler Cap Message 389
■ Vehicle Loading 389
□ Vehicle Certification Label 389
■ Trailer Towing 394
□ Common Towing Definitions 394
□ Towing Tips 407
■ Recreational Towing (Behind Motorhome, Etc.) 409

STARTING PROCEDURES

Before starting your vehicle, adjust your seat, adjust the inside and outside mirrors, fasten your seat belt, and if present, instruct all other occupants to buckle their seat belts.

WARNING!

Never leave unattended children alone in a vehicle. Leaving children in a vehicle is dangerous for a number of reasons. A child or others could be seriously or fatally injured. Do not leave the key fob in the ignition switch. A child could operate power windows, other controls, or move the vehicle.

Automatic Transmission

The shift lever must be in the NEUTRAL or PARK position before you can start the engine. Press the brake pedal before shifting into any driving gear.

Normal Starting

1. Do not press the accelerator.

2. Use the Fob with Integrated Key to briefly turn the ignition switch to the START position and release it as soon as the starter engages. The starter motor will continue to run, and it will disengage automatically when the engine is running.

3. If the engine fails to start, the starter will disengage automatically in 10 seconds. If this occurs, turn the ignition switch to the OFF position, wait 10 to 15 seconds, then repeat the “Normal Starting” procedure (Steps 1–3 above).

NOTE: This vehicle is equipped with a transmission shift interlocking system. The brake pedal must be pressed to shift out of PARK.

Extreme Cold Weather (Below −20°F or –29°C)

Follow the same instructions in the "Normal Starting" procedure.

To ensure reliable starting at these temperatures, use of an externally powered electric engine block heater (available from your authorized dealer) is recommended.

If The Engine Fails To Start

WARNING!

- **Never pour fuel or other flammable liquids into the throttle body air inlet opening in an attempt to start the vehicle. This could result in a flash fire causing serious personal injury.**

(Continued)

WARNING! (Continued)

- **Do not attempt to push or tow your vehicle to get it started. Vehicles equipped with an automatic transmission cannot be started this way. Unburned fuel could enter the catalytic converter and once the engine has started, ignite and damage the converter and vehicle.**
- **If the vehicle has a discharged battery, booster cables may be used to obtain a start from a booster battery or the battery in another vehicle. This type of start can be dangerous if done improperly. Refer to "Jump Starting" in "What To Do In Emergencies" for further information.**

If the engine fails to start after you have followed the "Normal Starting" procedure, it may be flooded. Push the accelerator pedal all the way to the floor and hold it there while cranking the engine. This should clear any excess fuel in case the engine is flooded.

CAUTION!

To prevent damage to the starter, DO NOT crank the engine for more than 15–second intervals at one time. Wait 10 to 15 seconds before trying again.

If the engine has been flooded, it may start to run, but not have enough power to continue running when the key fob is released. If this occurs, continue cranking with the accelerator pedal pushed all the way to the floor. Release the accelerator pedal and the key fob once the engine is running smoothly.

If the engine shows no sign of starting after two 15–second intervals of cranking with the accelerator pedal held to the floor, the "Normal Starting" procedure should be repeated.

After Starting

The idle speed will automatically decrease as the engine warms up.

ENGINE BLOCK HEATER — IF EQUIPPED

The engine block heater warms the engine, and permits quicker starts in cold weather. Connect the electrical cord to a standard 110-115 Volt AC electrical outlet with a grounded, three-wire extension cord.

The engine block heater cord is routed under the hood on the driver's side of the vehicle. It has a removable cap that is located on the driver side of the Integrated Power Module.

WARNING!

Remember to disconnect the electrical cord before driving. Damage to the 110-115 volt electrical cord could cause electrocution.

AUTOMATIC TRANSMISSION

CAUTION!

Damage to the transmission may occur if the following precautions are not observed:

- **Move the shift lever into PARK only after the vehicle has come to a complete stop.**
- **Do not move the shift lever from REVERSE, PARK, or NEUTRAL into any forward gear when the engine is above idle speed.**
- **Before moving the shift lever into any gear, make sure your foot is firmly on the brake pedal.**

NOTE: You must press and hold the brake pedal down while shifting out of PARK.

WARNING!

It is dangerous to move the shift lever out of PARK or NEUTRAL if the engine speed is higher than idle speed. If your foot is not firmly on the brake pedal, the vehicle could accelerate quickly forward or in reverse. You could lose control of the vehicle and hit someone or something. Only shift into gear when the engine is idling normally and when your foot is firmly on the brake pedal.

Key Ignition Park Interlock

This vehicle is equipped with a Key Ignition Park Interlock which requires the shift lever to be placed in PARK prior to rotating the key fob to the LOCK position. The key fob can only be removed from the ignition when the ignition switch is in the LOCK position and once removed the shift lever is locked in PARK.

Brake/Transmission Interlock System

This vehicle is equipped with a Brake Transmission Shift Interlock System (BTSI) that holds the shift lever in the PARK position when the ignition switch is in the LOCK position. To move the shift lever out of the PARK position, the ignition switch must be turned to any other switch position (ACC, ON, or START) (engine running or not) and the brake pedal must be pressed.

Automatic Transmission Ignition Interlock System

For electrical system malfunctions, there is an override for the interlock system. In order to override this system, remove the cover located to the top right of the shift lever in the instrument panel. The override can be activated by pressing the white-colored tab, which can be accessed through the hole in the instrument panel. While the override is pressed, the shift lever can be moved out of the PARK position without pressing the brake pedal. After operation, return the cover to its original position.

This system prevents the key fob from being removed unless the shift lever is in PARK. It also prevents moving the shift lever out of PARK, unless the key fob is in the ACC/ON position, and the brake pedal is pressed.

NOTE: If a malfunction occurs, the system will trap the key fob in the ignition cylinder to warn you that this safety feature is inoperable. The engine can be started and stopped but the key fob cannot be removed until you obtain service.

Four-Speed or Six-Speed Automatic Transmission

NOTE: Under extreme cold temperatures (-10°F (-23°C) and when in DRIVE, transmission operation may be briefly limited to only second gear operation. Normal operation will resume once the transmission temperature has risen to a suitable level.

The electronically-controlled transmission provides a precise shift schedule. The transmission electronics are self-calibrating; therefore, the first few shifts on a new vehicle may be somewhat abrupt. This is a normal condition, and precision shifts will develop within a few hundred miles (kilometers).

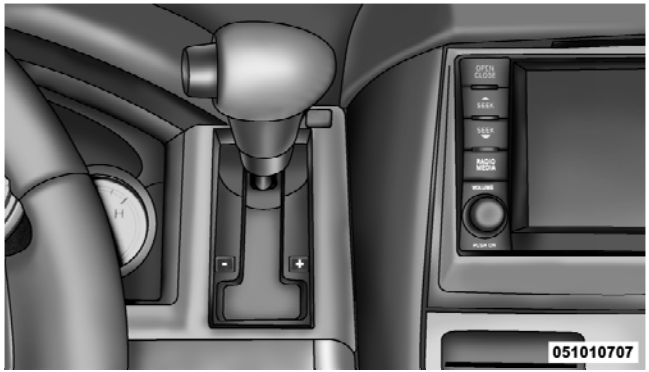

Shift Lever

The transmission has only PRND shift positions. Downshifts are carried out by an Electronic Range Select (ERS) by moving the lever—/ + while in the DRIVE position, the instrument cluster will display transmission gear selection as 6, 5, 4, 3, 2, 1 for six-speed, and 4, 3, 2, 1 for four-speed transmissions.

Gear Ranges

Do not race the engine when moving the shift lever from PARK or NEUTRAL positions into another gear range.

PARK

This range supplements the parking brake by locking the transmission. The engine can be started in this gear. Never attempt to use PARK while the vehicle is in motion. Apply the parking brake when leaving the vehicle in this gear.

When parking on a flat surface, place the shift lever in the PARK position first, and then apply the parking brake.

When parking on a hill, it is important to set the parking brake before placing the shift lever in PARK, otherwise the load on the transmission locking mechanism may make it difficult to move the shift lever out of PARK. As an added precaution, turn the front wheels toward the curb on a downhill grade, and away from the curb on an uphill grade.

WARNING!

- **Never use the PARK position as a substitute for the parking brake. Always apply the parking brake fully when parked to guard against vehicle movement and possible injury or damage.**

(Continued)

WARNING! (Continued)

- **Unintended movement of a vehicle could injure those in and near the vehicle. As with all vehicles, you should never exit a vehicle while the engine is running. Before exiting a vehicle, you should always shift the vehicle into PARK, remove the key fob from the ignition switch, and apply the parking brake. Once the key is removed from the ignition, the shift lever is locked in the PARK position, securing the vehicle against unwanted movement. Furthermore, you should never leave unattended children inside a vehicle.**

(Continued)

WARNING! (Continued)

- **Never leave children alone in a vehicle. Leaving unattended children in a vehicle is dangerous for a number of reasons. A child or others could be seriously or fatally injured. Do not leave the key fob in the ignition switch. A child could operate power windows, other controls, or move the vehicle.**

The following indicators should be used to ensure that you have placed the shift lever into the PARK position:

- When moving the shift lever into PARK, press the button on the shift lever and firmly move the lever all the way forward until it stops.
- Look at the shift indicator window on the console to ensure the shift lever is in the PARK position.
- When engaged in PARK, you will not be able to move the shift lever rearward without pressing the shift lever button.

CAUTION!

Before moving the shift lever out of PARK, you must turn the ignition switch from OFF to ACC/ON so the steering wheel and shift lever are released. Otherwise, damage to the steering column or shift lever could result.

REVERSE

This range is for moving the vehicle backward. Shift into REVERSE only after the vehicle has come to a complete stop.

NEUTRAL

This range is used when vehicle is standing for prolonged periods with engine running. Engine may be started in this range. Set the parking brake if you must leave the vehicle.

WARNING!

Do not coast in NEUTRAL and never turn off the ignition to coast down a hill. These are unsafe practices that limit your response to changing traffic or road conditions. You might lose control of the vehicle and have an accident.

DRIVE – Six-Speed Transmission

This range should be used for most city and highway driving. It provides the smoothest upshifts, downshifts, and best fuel economy. However, use the Electronic Range Select (ERS) mode by moving the lever — / + and select the "5" range when frequent transmission shifting occurs while using the DRIVE range, such as when operating the vehicle under heavy loading conditions, (i.e., in hilly terrain, traveling into strong head winds or while towing heavy trailers). Under these conditions, using the "5" range will improve performance and extend transmission life by reducing excessive shifting and heat buildup.

DRIVE – Four-Speed Transmission

This range should be used for most city and highway driving. It provides the smoothest upshifts, downshifts, and best fuel economy. However, select the "3" range when frequent transmission shifting occurs while using the DRIVE range, such as when operating the vehicle under heavy loading conditions, (i.e., in hilly terrain, traveling into strong head winds or while towing heavy trailers). Under these conditions, using the "3" range will improve performance and extend transmission life by reducing excessive shifting and heat buildup.

CAUTION!

If the transmission operating temperature exceeds acceptable limits, the vehicle computer will override DRIVE and select "5" range (on six-speed transmissions) or "3" range (on four-speed transmissions) by changing shift points. This is done to prevent transmission damage due to overheating.

Electronic Range Select (ERS) Operation

The Electronic Range Select (ERS) shift control allows you to move the shift lever to the left (-) or right (+) when the shift lever is in the DRIVE position, this allows the selection of the desired top gear. For example, if you shift the transmission into third gear, the transmission will never shift above third gear, but can shift down into second or first gear automatically, when needed.

Switching from ERS to DRIVE can be done at any vehicle speed. To shift from DRIVE mode to ERS mode, move the shift lever to the left (-) once. The current gear will be maintained as the top gear. To disable ERS, simply press and hold the shift lever to the right (+) until "D" is displayed in the instrument cluster odometer.

WARNING!

Do not downshift for additional engine braking on a slippery surface. The drive wheels could lose their grip and the vehicle could skid, causing an accident or personal injury.

Odometer Screen Display	1	2	3	4	5	6	D
Actual Gear(s) Allowed (Six-Speed Transmission)	1	1-2	1-3	1-4	1-5	1-6	1-6
Actual Gear(s) Allowed (Four-Speed Transmission)	1	1-2	1-3	1-4	N/A	N/A	1–4

NOTE: To select the proper gear position for maximum deceleration (engine braking), simply press and hold the shift lever to the left (-). The transmission will shift to the range from which the vehicle can best be slowed down.

Reset Mode – Electronic Transmission

The transmission is monitored electronically for abnormal conditions. If a condition is detected that could cause damage, the transmission automatically shifts into second gear (third gear for six-speed). The transmission remains in second gear (third gear for six-speed) despite the forward gear selected. PARK, REVERSE, and NEUTRAL will continue to operate. This Reset feature allows the vehicle to be driven to an authorized dealer for service without damaging the transmission.

In the event of a momentary problem, the transmission can be reset to regain all forward gears by performing the following steps:

1. Stop the vehicle.
2. Shift into PARK.
3. Turn the ignition switch to the OFF position.
4. Restart the engine.
5. Shift into the desired gear range and resume driving.

NOTE: Even if the transmission can be reset, it is recommended that you visit an authorized dealer at your earliest possible convenience.

If the transmission cannot be reset, authorized dealer service is required.

DRIVING ON SLIPPERY SURFACES

Acceleration

Rapid acceleration on snow covered, wet, or other slippery surfaces may cause the front wheels to pull erratically to the right or left. This phenomenon occurs when there is a difference in the surface traction under the front (driving) wheels.

WARNING!

Rapid acceleration on slippery surfaces is dangerous. Unequal traction can cause sudden pulling of the front wheels. You could lose control of the vehicle and possibly have an accident. Accelerate slowly and carefully whenever there is likely to be poor traction (ice, snow, wet mud, loose sand, etc.).

Traction

When driving on wet or slushy roads, it is possible for a layer of water to build up between the tire and road surface. This is known as hydroplaning and may cause partial or complete loss of vehicle control and stopping ability. To reduce this possibility, the following precautions should be observed:

1. Slow down during rainstorms or when roads are slushy.

2. Slow down if the road has standing water or puddles.

3. Replace the tires when tread wear indicators first become visible.

4. Keep the tires properly inflated.

5. Maintain sufficient distance between your vehicle and the vehicle in front of you to avoid a collision in a sudden stop.

DRIVING THROUGH WATER

Driving through water more than a few inches/centimeters deep will require extra caution to ensure safety and prevent damage to your vehicle.

Flowing/Rising Water

WARNING!

Do not drive on or across a road or path where water is flowing and/or rising (as in storm run-off). Flowing water can wear away the road or path's surface and cause your vehicle to sink into deeper water. Furthermore, flowing and/or rising water can carry your vehicle away swiftly. Failure to follow this warning may result in injuries that are serious or fatal to you, your passengers, and others around you.

Shallow Standing Water

Although your vehicle is capable of driving through shallow standing water, consider the following Caution and Warning before doing so.

CAUTION!

- **Always check the depth of the standing water before driving through it. Never drive through standing water that is deeper than the bottom of the tire rims mounted on the vehicle.**
- **Determine the condition of the road or the path that is under water and if there are any obstacles in the way before driving through the standing water.**
- **Do not exceed 5 mph (8 km/h) when driving through standing water. This will minimize wave effects.**

(Continued)

CAUTION! (Continued)

- **Driving through standing water may cause damage to your vehicle's drivetrain components. Always inspect your vehicle's fluids (i.e., engine oil, transmission, axle, etc.) for signs of contamination (i.e., fluid that is milky or foamy in appearance) after driving through standing water. Do not continue to operate the vehicle if any fluid appears contaminated, as this may result in further damage. Such damage is not covered by the New Vehicle Limited Warranty.**
- **Getting water inside your vehicle's engine can cause it to lock up and stall out, and cause serious internal damage to the engine. Such damage is not covered by the New Vehicle Limited Warranty.**

WARNING!

- **Driving through standing water limits your vehicle's traction capabilities. Do not exceed 5 mph (8 km/h) when driving through standing water.**
- **Driving through standing water limits your vehicle's braking capabilities, which increases stopping distances. Therefore, after driving through standing water, drive slowly and lightly press on the brake pedal several times to dry the brakes.**
- **Getting water inside your vehicle's engine can cause it to lock up and stall out, and leave you stranded.**
- **Failure to follow these warnings may result in injuries that are serious or fatal to you, your passengers, and others around you.**

POWER STEERING

The standard power steering system will give you good vehicle response and increased ease of maneuverability in tight spaces. The system will provide mechanical steering capability if power assist is lost.

If for some reason the power assist is interrupted, it will still be possible to steer your vehicle. Under these conditions, you will observe a substantial increase in steering effort, especially at very low vehicle speeds and during parking maneuvers.

NOTE:

- Increased noise levels at the end of the steering wheel travel are considered normal and do not indicate that there is a problem with the power steering system.

- Upon initial start-up in cold weather, the power steering pump may make noise for a short amount of time. This is due to the cold, thick fluid in the steering system. This noise should be considered normal, and it does not in any way damage the steering system.

WARNING!

Continued operation with reduced power steering assist could pose a safety risk to yourself and others. Service should be obtained as soon as possible.

CAUTION!

Prolonged operation of the steering system at the end of the steering wheel travel will increase the steering fluid temperature and it should be avoided when possible. Damage to the power steering pump may occur.

Power Steering Fluid Check

Checking the power steering fluid level at a defined service interval is not required. The fluid should only be checked if a leak is suspected, abnormal noises are apparent, and/or the system is not functioning as anticipated. Coordinate inspection efforts through an authorized dealer.

CAUTION!

Do not use chemical flushes in your power steering system as the chemicals can damage your power steering components. Such damage is not covered by the New Vehicle Limited Warranty.

WARNING!

Fluid level should be checked on a level surface and with the engine off to prevent injury from moving parts and to ensure accurate fluid level reading. Do not overfill. Use only manufacturer's recommended power steering fluid.

If necessary, add fluid to restore to the proper indicated level. With a clean cloth, wipe any spilled fluid from all surfaces. Refer to "Fluids, Lubricants, and Genuine Parts" in "Maintaining Your Vehicle" for further information.

PARKING BRAKE

Before leaving the vehicle, make sure that the parking brake is fully applied and place the shift lever in the PARK position.

The foot operated parking brake is positioned below the lower left corner of the instrument panel. To apply the park brake, firmly push the park brake pedal fully. To release the parking brake, press the park brake pedal a second time and let your foot up as you feel the brake disengage.

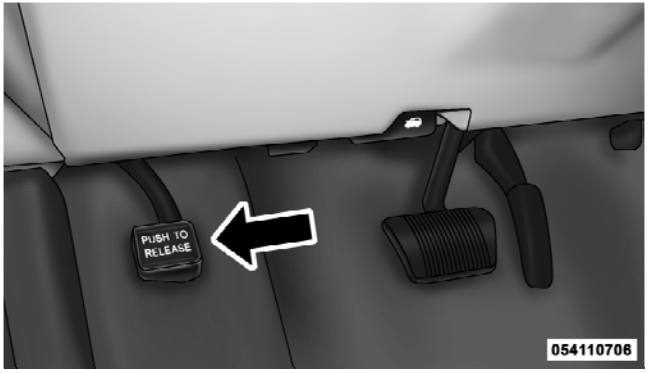

Parking Brake

When the parking brake is applied with the ignition switch in the ON position, the "Brake Warning Light" in the instrument cluster will illuminate.

NOTE:

- When the parking brake is applied and the automatic transmission is placed in gear, the "Brake Warning Light" will flash. If vehicle speed is detected, a chime will sound to alert the driver. Fully release the parking brake before attempting to move the vehicle.
- This light only shows that the parking brake is applied. It does not show the degree of brake application.

When parking on a hill, it is important to turn the front wheels toward the curb on a downhill grade and away from the curb on an uphill grade. For vehicles equipped with an automatic transmission, apply the parking brake before placing the shift lever in PARK, otherwise the load on the transmission locking mechanism may make it difficult to move the shift lever out of PARK. The parking brake should always be applied whenever the driver is not in the vehicle.

WARNING!

- **Never leave children alone in a vehicle. Leaving unattended children in a vehicle is dangerous for a number of reasons. A child or others could be seriously or fatally injured.**
- **Do not leave the key fob in the ignition switch. A child could operate power windows, other controls, or move the vehicle.**
- **Be sure the parking brake is fully disengaged before driving; failure to do so can lead to brake failure and an accident.**

(Continued)

WARNING! (Continued)

- **Always fully apply the parking brake when leaving your vehicle, or it may roll and cause damage or injury. Also be certain to leave the transmission in PARK. Failure to do so may allow the vehicle to roll and cause damage or injury.**

CAUTION!

If the Brake System Warning Light remains on with the parking brake released, a brake system malfunction is indicated. Have the brake system serviced by an authorized dealer immediately.

ANTI-LOCK BRAKE SYSTEM (ABS)

The Anti-Lock Brake System (ABS) provides increased vehicle stability and brake performance under most braking conditions. The system operates with a separate computer to modulate hydraulic pressure to prevent wheel lock-up and help avoid skidding on slippery surfaces.

ABS is activated during braking under certain road or stopping conditions. ABS-inducing conditions can include ice, snow, gravel, bumps, railroad tracks, loose debris, or panic stops.

You may experience the following when the brake system goes into anti-lock:

- The ABS motor running (it may continue to run for a short time after the stop)
- A clicking sound of solenoid valves
- Brake pedal pulsations
- A slight drop or fall away of the brake pedal at the end of the stop

WARNING!

- **The Anti-Lock Brake System contains sophisticated electronic equipment that may be susceptible to interference caused by improperly installed, or high output radio transmitting equipment. This interference can cause possible loss of anti-lock braking capability. Installation of such equipment should be performed by qualified professionals.**
- **Pumping of the Anti-Lock Brakes will diminish their effectiveness and may lead to an accident. Pumping makes the stopping distance longer. Just press firmly on your brake pedal when you need to slow down or stop.**

(Continued)

WARNING! (Continued)

- **The Anti-Lock Brake System cannot prevent accidents, including those resulting from excessive speed in turns, following another vehicle too closely, or hydroplaning. Only a safe, attentive, and skillful driver can prevent accidents.**
- **The capabilities of an ABS-equipped vehicle must never be exploited in a reckless or dangerous manner, which could jeopardize the user's safety or the safety of others.**

All vehicle wheels and tires must be the same size and type, and tires must be properly inflated to produce accurate signals for the computer.

Anti-Lock Brake Warning Light

The "Anti-Lock Brake Warning Light" monitors the anti-lock brake system. The light will come on when the ignition switch is turned to the ON position and may stay on for as long as four seconds.

If the "Anti-Lock Brake Warning Light" remains on or comes on while driving, it indicates that the anti-lock portion of the brake system is not functioning and that service is required. However, the conventional brake system will continue to operate normally if the "Brake Warning Light" is not on.

If the "Anti-Lock Brake Warning Light" is on, the brake system should be serviced as soon as possible to restore the benefits of anti-lock brakes. If the "Anti-Lock Brake Warning Light" does not come on when the ignition switch is turned to the ON position, have the bulb repaired as soon as possible.

If both the "Brake Warning Light" and the "Anti-Lock Brake Warning Light" remain on, the ABS and Electronic Brake Force Distribution (EBD) systems are not functioning. Immediate repair to the ABS system is required. Consult with your authorized dealer service center as soon as possible.

ELECTRONIC BRAKE CONTROL SYSTEM

Your vehicle is equipped with an advanced electronic brake control system that includes the Traction Control System (TCS), Brake Assist System (BAS) and Electronic Stability Program (ESP). These systems complement the Anti-Lock Brake System (ABS) by optimizing the vehicle braking capability during emergency braking maneuvers.

Traction Control System (TCS)

The Traction Control System (TCS) monitors the amount of wheel spin of each of the driven wheels. If wheel spin is detected, brake pressure is applied to the slipping

wheel(s) and engine power is reduced, to provide enhanced acceleration and stability. A feature of the TCS functions similarly to a limited-slip differential, and controls the wheel spin across a driven axle. If one wheel on a driven axle is spinning faster than the other, the system will apply the brake of the spinning wheel. This will allow more engine torque to be applied to the wheel that is not spinning. This feature remains active even if the ESP is in the "Partial Off" mode.

The "ESP/TCS Indicator Light" (in the instrument cluster) will start to flash as soon as the tires lose traction and the wheels begin to spin. This indicates that the TCS is active. If the indicator light flashes during acceleration, ease up on the accelerator and apply as little throttle as possible. Be sure to adapt your speed and driving to the prevailing road conditions, and do not switch off the ESP or TCS.

WARNING!

- **The TCS cannot prevent the natural laws of physics from acting on the vehicle, nor can it increase the traction afforded.**
- **The TCS cannot prevent accidents, including those resulting from excessive speed in turns, or hydroplaning. Only a safe, attentive, and skillful driver can prevent accidents.**
- **The capabilities of a TCS-equipped vehicle must never be exploited in a reckless or dangerous manner, which could jeopardize the user's safety or the safety of others.**

Brake Assist System (BAS)

The Brake Assist System (BAS) is designed to optimize the vehicle's braking capability during emergency braking maneuvers. The system detects an emergency braking situation by sensing the rate and amount of brake application, and then applies optimum pressure to the brakes. This can help reduce braking distances. The BAS complements the ABS. Applying the brakes very quickly results in the best BAS assistance. To receive the benefit of the system, you must apply continuous braking pressure during the stopping sequence. Do not reduce brake pedal pressure unless braking is no longer desired. Once the brake pedal is released, the BAS is deactivated.

WARNING!

- **The BAS cannot prevent the natural laws of physics from acting on the vehicle, nor can it increase the traction afforded by prevailing road conditions.**
- **The BAS cannot prevent accidents, including those resulting from excessive speed in turns, driving on very slippery surfaces, or hydroplaning. Only a safe, attentive, and skillful driver can prevent accidents.**
- **The capabilities of a BAS-equipped vehicle must never be exploited in a reckless or dangerous manner which could jeopardize the user's safety or the safety of others.**

Electronic Stability Program (ESP)

The Electronic Stability Program (ESP) enhances directional control and stability of the vehicle under various driving conditions. ESP corrects for over/under steering of the vehicle by applying the brake of the appropriate wheel to assist in counteracting the over/under steer condition. Engine power may also be reduced to help the vehicle maintain the desired path.

ESP uses sensors in the vehicle to determine the vehicle path intended by the driver and compares it to the actual path of the vehicle. When the actual path does not match the intended path, ESP applies the brake of the appropriate wheel to assist in counteracting the oversteer or understeer condition.

- Oversteer - when the vehicle is turning more than appropriate for the steering wheel position.
- Understeer - when the vehicle is turning less than appropriate for the steering wheel position.

ESP On

This mode is the normal operating mode for ESP on two-wheel drive vehicles. Whenever the vehicle is started, the ESP system will be in this mode. This mode should be used for most driving situations. ESP should only be turned off for specific reasons as noted below.

ESP Partial Off

This mode is entered by momentarily pressing the "ESP OFF" switch (located in the center switch bank, next to the hazard flasher switch).

ESP OFF

When in the "Partial Off" mode, the TCS portion of ESP, except for the "limited slip" feature described in the TCS section, has been disabled and the "ESP/TCS Indicator Light" will be illuminated. When in the "Partial Off" mode, ESP will operate without engine torque management. This mode is intended to be used if the vehicle is in deep snow, sand or gravel conditions and more wheel spin

than ESP would normally allow is required to gain traction. To turn ESP on again, momentarily press the "ESP OFF" switch. This will restore the normal "ESP On" mode of operation.

NOTE: To improve the vehicle's traction when driving with snow chains, or starting off in deep snow, sand or gravel, it may be desirable to switch to the "Partial Off" mode by pressing the "ESP OFF" switch. Once the situation requiring ESP to be switched to the "Partial Off" mode is overcome, turn ESP back on by momentarily pressing the "ESP OFF" switch. This may be done while the vehicle is in motion.

ESP/BAS Warning Light

ESP BAS

The malfunction indicator light for the ESP is combined with BAS. The "ESP/BAS Warning Light" and the "ESP/TCS Indicator Light" (in the instrument cluster) come on for four seconds when the ignition switch is turned to the ON position, then goes out. If the "ESP/BAS Warning Light" comes on continuously with the engine running, a malfunction has been detected in either the ESP or the BAS system. If this light remains on after several ignition cycles, and the vehicle has been driven several miles/kilometers at speeds greater than 30 mph (48 km/h), see your authorized dealer as soon as possible to have the problem diagnosed and corrected.

NOTE:

- The "ESP/TCS Indicator Light" and the "ESP/BAS Warning Light" come on momentarily, each time the ignition switch is turned ON.
- Each time the ignition is turned ON, the ESP System will be ON, even if it was turned off previously.
- The ESP Control System will make buzzing or clicking sounds when it is active. This is normal. The sounds will stop when ESP becomes inactive, following the maneuver that caused the ESP activation.

TIRE SAFETY INFORMATION

Tire Markings

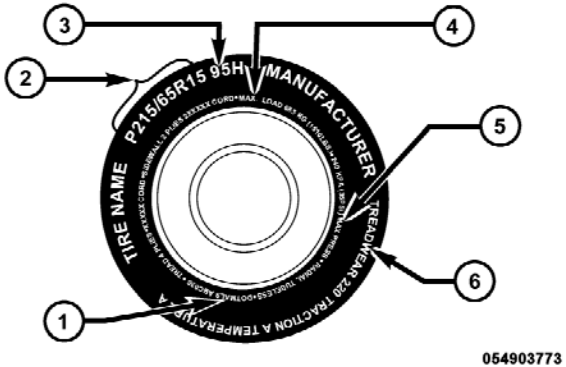

1 — U.S. DOT Safety Standards Code (TIN)	4 — Maximum Load
2 — Size Designation	5 — Maximum Pressure
3 — Service Description	6 — Treadwear, Traction and Temperature Grades

NOTE:

- P (Passenger) - Metric tire sizing is based on U.S. design standards. P-Metric tires have the letter “P” molded into the sidewall preceding the size designation. Example: P215/65R15 95H.
- European-Metric tire sizing is based on European design standards. Tires designed to this standard have the tire size molded into the sidewall beginning with the section width. The letter ″P″ is absent from this tire size designation. Example: 215/65R15 96H.
- LT (Light Truck) - Metric tire sizing is based on U.S. design standards. The size designation for LT-Metric tires is the same as for P-Metric tires except for the letters “LT” that are molded into the sidewall preceding the size designation. Example: LT235/85R16.
- Temporary spare tires are high-pressure compact spares designed for temporary emergency use only.

Tires designed to this standard have the letter "T" molded into the sidewall preceding the size designation. Example: T145/80D18 103M.

- High flotation tire sizing is based on U.S. design standards and it begins with the tire diameter molded into the sidewall. Example: 31x10.5 R15 LT.

Tire Sizing Chart

EXAMPLE:
Size Designation:
P = Passenger car tire size based on U.S. design standards **"....blank...."** = Passenger car tire based on European design standards **LT** = Light truck tire based on U.S. design standards **T** = Temporary spare tire **31** = Overall diameter in inches (in)
215 = Section width in millimeters (mm)
65 = Aspect ratio in percent (%) — Ratio of section height to section width of tire **10.5** = Section width in inches (in)
R = Construction code — "R" means radial construction —"D" means diagonal or bias construction
15 = Rim diameter in inches (in)

EXAMPLE:
Service Description:
95 = Load Index — A numerical code associated with the maximum load a tire can carry
H = Speed Symbol — A symbol indicating the range of speeds at which a tire can carry a load corresponding to its load index under certain operating conditions — The maximum speed corresponding to the speed symbol should only be achieved under specified operating conditions (i.e., tire pressure, vehicle loading, road conditions, and posted speed limits)
Load Identification:
"....blank...." = Absence of any text on the sidewall of the tire indicates a Standard Load (SL) tire
Extra Load (XL) = Extra load (or reinforced) tire
Light Load = Light load tire
C, D, E = Load range associated with the maximum load a tire can carry at a specified pressure
Maximum Load — Maximum load indicates the maximum load this tire is designed to carry
Maximum Pressure — Maximum pressure indicates the maximum permissible cold tire inflation pressure for this tire

Tire Identification Number (TIN)

The TIN may be found on one or both sides of the tire, however, the date code may only be on one side. Tires with white sidewalls will have the full TIN, including the date code, located on the white sidewall side of the tire. Look for the TIN on the outboard side of black sidewall tires as mounted on the vehicle. If the TIN is not found on the outboard side, then you will find it on the inboard side of the tire.

EXAMPLE:
DOT MA L9 ABCD 0301
DOT = Department of Transportation — This symbol certifies that the tire is in compliance with the U.S. Department of Transportation tire safety standards and is approved for highway use
MA = Code representing the tire manufacturing location (two digits)
L9 = Code representing the tire size (two digits)
ABCD = Code used by the tire manufacturer (one to four digits)
03 = Number representing the week in which the tire was manufactured (two digits) —03 means the 3rd week.
01 = Number representing the year in which the tire was manufactured (two digits) —01 means the year 2001 — Prior to July 2000, tire manufacturers were only required to have one number to represent the year in which the tire was manufactured. Example: 031 could represent the 3rd week of 1981 or 1991

Tire Terminology and Definitions

Term	Definition
B-Pillar	The vehicle B-Pillar is a structural member of the body located between the front and rear door (of a four-door vehicle) running from the sill to the roof.
Cold Tire Pressure	Cold tire inflation pressure is defined as the tire pressure after the vehicle has not been driven for at least 3 hours, or driven less than 1 mile (1.6 km) after sitting for a three hour period. Inflation pressure is measured in units of PSI (pounds per square inch) or KPa (kilopascals).
Maximum Inflation Pressure	The maximum inflation pressure is the maximum permissible cold tire inflation pressure for this tire. The max inflation pressure is molded into the sidewall.
Recommended Inflation Pressure	Vehicle manufacturer's recommended tire inflation pressure as shown on the tire placard.
Tire Placard	A paper label permanently attached to the vehicle showing the vehicle's loading capacity, the original equipment tire size and the recommended inflation pressure.

Tire Loading and Tire Pressure

Tire Placard Location

NOTE: The proper cold tire inflation pressure is listed on the driver's side B-Pillar.

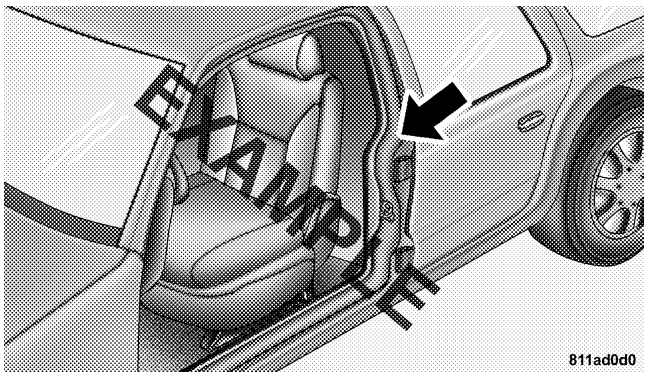

Tire Placard Location

Tire and Loading Information Placard

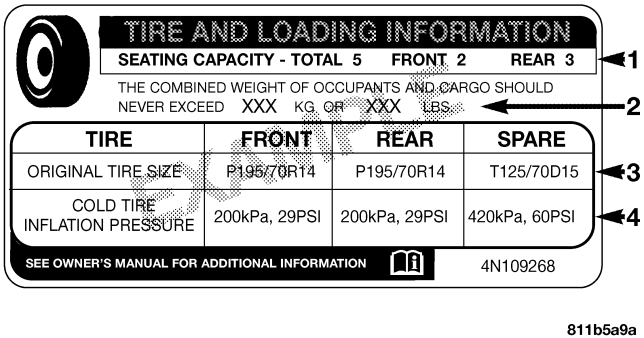

Tire and Loading Information Placard

This placard tells you important information about the:

1) number of people that can be carried in the vehicle
2) total weight your vehicle can carry

3) tire size designed for your vehicle

4) cold tire inflation pressures for the front, rear, and spare tires.

Loading

The vehicle maximum load on the tire must not exceed the load carrying capacity of the tire on your vehicle. You will not exceed the tire's load carrying capacity if you adhere to the loading conditions, tire size, and cold tire inflation pressures specified on the Tire and Loading Information placard and in the "Vehicle Loading" section of this manual.

NOTE: Under a maximum loaded vehicle condition, gross axle weight ratings (GAWRs) for the front and rear axles must not be exceeded. For further information on GAWRs, vehicle loading, and trailer towing, refer to "Vehicle Loading" in this section.

To determine the maximum loading conditions of your vehicle, locate the statement "The combined weight of occupants and cargo should never exceed XXX lbs or XXX kg" on the Tire and Loading Information placard. The combined weight of occupants, cargo/luggage and trailer tongue weight (if applicable) should never exceed the weight referenced here.

Steps for Determining Correct Load Limit

1. Locate the statement "The combined weight of occupants and cargo should never exceed XXX lbs or XXX kg" on your vehicle's placard.

2. Determine the combined weight of the driver and passengers that will be riding in your vehicle.

3. Subtract the combined weight of the driver and passengers from XXX lbs or XXX kg.

4. The resulting figure equals the available amount of cargo and luggage load capacity. For example, if "XXX" amount equals 1,400 lbs (635 kg) and there will be five 150 lb (68 kg) passengers in your vehicle, the amount of available cargo and luggage load capacity is 650 lbs (295 kg) (since 5 x 150 = 750, and 1400 – 750 = 650 lbs [295 kg]).

5. Determine the combined weight of luggage and cargo being loaded on the vehicle. That weight may not safely exceed the available cargo and luggage load capacity calculated in Step 4.

6. If your vehicle will be towing a trailer, load from your trailer will be transferred to your vehicle. Consult this manual to determine how this reduces the available cargo and luggage load capacity of your vehicle.

NOTE:

- The following table shows examples on how to calculate total load, cargo/luggage, and towing capacities of your vehicle with varying seating configurations and number and size of occupants. This table is for illustration purposes only and may not be accurate for the seating and load carry capacity of your vehicle.
- For the following example, the combined weight of occupants and cargo should never exceed 865 lbs (392 kg).

Occupants			Combined weight of occupants and cargo from Tire Placard	MINUS	Combined Occupant's weight	=	AVAILABLE Cargo/Luggage and Trailer Tongue Weight
TOTAL	FRONT	REAR					
EXAMPLE 1							
5	2	3			Occupant 1: 200 lbs Occupant 2: 130 lbs Occupant 3: 160 lbs Occupant 4: 100 lbs Occupant 5: 80 lbs TOTAL WEIGHT: 670 lbs		
			865 lbs	minus	670 lbs	=	195 lbs
EXAMPLE 2							
3	2	1			Occupant 1: 210 lbs Occupant 2: 180 lbs Occupant 3: 150 lbs TOTAL WEIGHT: 540 lbs		
			865 lbs	minus	540 lbs	=	325 lbs
EXAMPLE 3							
2	2	0			Occupant 1: 200 lbs Occupant 2: 200 lbs TOTAL WEIGHT: 400 lbs		
			865 lbs	minus	400 lbs	=	465 lbs

EXAMPLE

811a4d11

WARNING!

Overloading of your tires is dangerous. Overloading can cause tire failure, affect vehicle handling, and increase your stopping distance. Use tires of the recommended load capacity for your vehicle. Never overload them.

TIRES — GENERAL INFORMATION

Tire Pressure

Proper tire inflation pressure is essential to the safe and satisfactory operation of your vehicle. Three primary areas are affected by improper tire pressure.

Safety

WARNING!

- **Improperly inflated tires are dangerous and can cause accidents.**
- **Under-inflation increases tire flexing and can result in over-heating and tire failure.**
- **Over-inflation reduces a tire's ability to cushion shock. Objects on the road and chuckholes can cause damage that result in tire failure.**
- **Unequal tire pressures can cause steering problems. You could lose control of your vehicle.**
- **Over-inflated or under-inflated tires can affect vehicle handling and can fail suddenly, resulting in loss of vehicle control.**

(Continued)

WARNING! (Continued)

- **Unequal tire pressures from one side of the vehicle to the other can cause the vehicle to drift to the right or left.**
- **Always drive with each tire inflated to the recommended cold tire inflation pressure.**

Economy

Improper inflation pressures can cause uneven wear patterns to develop across the tire tread. These abnormal wear patterns will reduce tread life resulting in a need for earlier tire replacement. Under-inflation, also increases tire rolling resistance and results in higher fuel consumption.

Ride Comfort and Vehicle Stability

Proper tire inflation contributes to a comfortable ride. Over-inflation produces a jarring and uncomfortable ride.

Tire Inflation Pressures

The proper cold tire inflation pressure is listed on the driver's side "B" Pillar.

The tire pressure should be checked and adjusted, and the tires inspected for signs of wear or visible damage, at least once a month. Use a good quality pocket-type gauge to check tire pressure. Do not make a visual judgement when determining proper inflation. Radial tires may look properly inflated, even when they are under-inflated.

CAUTION!

After inspecting or adjusting the tire pressure, always reinstall the valve stem cap. This will prevent moisture and dirt from entering the valve stem, which could damage the valve stem.

Inflation pressures specified on the placard are always "cold tire inflation pressure." Cold tire inflation pressure is defined as the tire pressure after the vehicle has not been driven for at least three hours, or driven less than 1 mile (1.6 km) after a three-hour period. The cold tire inflation pressure must not exceed the maximum inflation pressure molded into the tire sidewall.

Check tire pressures more often if subject to a wide range of outdoor temperatures, as tire pressures vary with temperature changes.

Tire pressures change by approximately 1 psi (7 kPa) per 12° F (7° C) of air temperature change. Keep this in mind when checking tire pressure inside a garage, especially in the Winter.

Example: If garage temperature is 68°F (20°C) and the outside temperature is 32°F (0°C), then the cold tire inflation pressure should be increased by 3 psi (21 kPa), which equals 1 psi (7 kPa) for every 12°F (7°C) for this outside temperature condition.

Tire pressure may increase from 2 to 6 psi (13 to 40 kPa) during operation. Do not reduce this normal pressure buildup or your tire pressure will be too low.

Tire Pressures for High-Speed Operation

The manufacturer advocates driving at safe speeds within posted speed limits. Where speed limits or conditions are such that the vehicle can be driven at high speeds, maintaining correct tire inflation pressure is very important. Increased tire pressure and reduced vehicle loading may be required for high-speed vehicle operation. Refer to original-equipment information, or an authorized tire dealer, for recommended safe operating speeds, loading and cold tire inflation pressures.

WARNING!

High-speed driving, with your vehicle at or above maximum load, is dangerous. The added strain on your tires could cause them to fail. You could have a serious accident. Do not drive a vehicle loaded to the maximum capacity at continuous speeds above 75 mph (120 km/h).

Radial-Ply Tires

WARNING!

Combining radial ply tires with other types of tires on your vehicle will cause your vehicle to handle poorly. The instability could cause an accident. Always use radial ply tires in sets of four. Never combine them with other types of tires.

Cuts and punctures in radial tires are repairable only in the tread area because of sidewall flexing. Consult your authorized tire dealer for radial tire repairs.

Compact Spare Tire

The compact spare is for temporary emergency use with radial tires. It is engineered to be used on your style vehicle only. Since this tire has limited tread life, the original tire should be repaired (or replaced) and reinstalled at the first opportunity.

WARNING!

- **Temporary-use spare tires are for emergency use only. With these tires, do not drive faster than 50 mph (80 km/h).**

(Continued)

WARNING! (Continued)

- **Temporary-use spare tires have limited tread life. When the tread is worn to the tread wear indicators, the temporary use spare tire needs to be replaced.**
- **Be sure to follow the warnings that apply to your spare. Failure to do so could result in spare tire failure and loss of vehicle control.**

Do not install a wheel cover or attempt to mount a conventional tire on the compact spare wheel, since the wheel is designed specifically for the compact spare.

Do not install more than one compact spare tire/wheel on the vehicle at any given time.

CAUTION!

Because of the reduced ground clearance, do not take your vehicle through an automatic car wash with the compact spare installed. Damage to the vehicle may result.

Tire Spinning

When stuck in mud, sand, snow, or ice conditions, do not spin your vehicle's wheels faster than 30 mph (48 km/h), or for more than 30 seconds continuously, without stopping.

Refer to "Freeing A Stuck Vehicle" in "What To Do In Emergencies" for further information.

WARNING!

- **Fast spinning tires can be dangerous. Forces generated by excessive wheel speeds may cause tire damage or failure. A tire could explode and injure someone.**
- **Do not spin your vehicle's wheels faster than 30 mph (48 km/h), or for more than 30 seconds continuously, when you are stuck; and do not let anyone near a spinning wheel, no matter what the speed.**

Tread Wear Indicators

Tread wear indicators are in the original-equipment tires to help you in determining when your tires should be replaced.

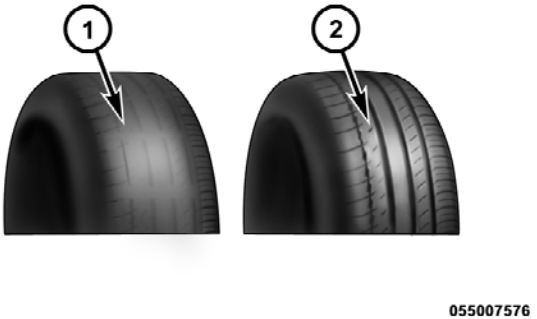

1 — Worn Tire
2 — New Tire

These indicators are molded into the bottom of the tread grooves. They will appear as bands when the tread depth becomes 1/16 in (2 mm). When the tread is worn to the tread wear indicators, the tire should be replaced.

Life of Tire

The service life of a tire is dependent upon varying factors, including, but not limited to:

- Driving style
- Tire pressure
- Distance driven

WARNING!

The tires and the spare tire should be replaced after six years, regardless of the remaining tread. Failure to follow this warning can result in sudden tire failure. You could lose control and have an accident resulting in serious injury or death.

Keep dismounted tires in a cool, dry place with as little exposure to light as possible. Protect tires from contact with oil, grease and gasoline.

Replacement Tires

The tires on your new vehicle provide a balance of many characteristics. They should be inspected regularly for wear and correct cold tire inflation pressure. The manufacturer strongly recommends that you use tires equivalent to the originals in size, quality and performance when replacement is needed. Please see "Tread Wear Indicators" and "Tire and Loading Information" placard for the size designation of your tire. The service description and load identification will be found on the original-equipment tire. Failure to use equivalent replacement tires may adversely affect the safety, handling, and ride of your vehicle. We recommend that you contact your original-equipment manufacturer, or an authorized tire dealer, with any questions you may have on tire specifications or capability.

WARNING!

- **Do not use a tire, wheel size or rating other than that specified for your vehicle. Some combinations of unapproved tires and wheels may change suspension dimensions and performance characteristics, resulting in changes to steering, handling, and braking of your vehicle. This can cause unpredictable handling and stress to steering and suspension components. You could lose control and have an accident resulting in serious injury or death. Use only the tire and wheel sizes with load ratings approved for your vehicle.**
- **Never use a tire with a smaller load index or capacity, than what was originally equipped on your vehicle. Using a tire with a smaller load index could result in tire overloading and failure. You could lose control and have an accident.**

(Continued)

WARNING! (Continued)

- **Failure to equip your vehicle with tires having adequate speed capability can result in sudden tire failure and loss of vehicle control.**

CAUTION!

Replacing original tires with tires of a different size may result in false speedometer and odometer readings.

SNOW TIRES

Some areas of the country require the use of snow tires during Winter. Standard tires are of the all-season type and satisfy this requirement as indicated by the M+S designation on the tire sidewall.

If you need snow tires, select tires equivalent in size and type to the original equipment tires. Use snow tires only in sets of four; failure to do so may adversely affect the safety and handling of your vehicle.

Snow tires generally have lower speed ratings than what was originally equipped with your vehicle and should not be operated at sustained speeds over 75 mph (120 km/h).

TIRE ROTATION RECOMMENDATIONS

Tires on the front and rear axles of vehicles operate at different loads and perform different steering, driving, and braking functions. For these reasons, they wear at unequal rates.

These effects can be reduced by timely rotation of tires. The benefits of rotation are especially worthwhile with aggressive tread designs such as those on All-Season type tires. Rotation will increase tread life, help to maintain mud, snow, and wet traction levels, and contribute to a smooth, quiet ride.

Refer to “Maintenance Schedule” for the proper maintenance intervals. More frequent rotation is permissible if desired. The reasons for any rapid or unusual wear should be corrected prior to rotation being performed.

The suggested rotation method is shown in the following diagram.

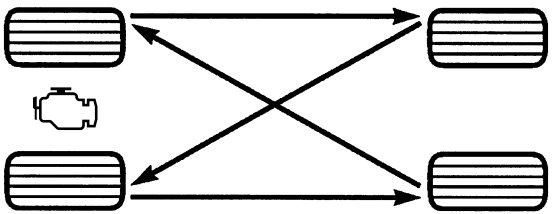

Tire Rotation

TIRE PRESSURE MONITOR SYSTEM (TPMS)

The TPMS will warn the driver of a low tire pressure based on the cold inflation tire pressure requirements found on the tire placard located on the driver's-side B-pillar.

The tire pressure will vary with temperature by about 1 psi (6.9 kPa) for every 12°F (6.5°C). This means that when the outside temperature decreases, the tire pressure will decrease. Tire pressure should always be set based on cold inflation tire pressure. This is defined as the tire pressure after a vehicle has not been driven for more than three hours - and in outside ambient temperature. **Refer to "Tires – General Information" in "Starting and Operating" for information on how to properly inflate the vehicle's tires.** The tire pressure will also increase as the vehicle is driven - this is normal and there should be no adjustment for this increased pressure.

The TPMS will warn the driver of a low tire pressure if the tire pressure falls below the low pressure warning threshold for any reason, including low temperature effects, or natural air pressure loss through the tire.

The TPMS will continue to warn the driver of low tire pressure as long as the condition exists, and will not turn off until the tire pressure is at or above recommended cold tire placard pressure. Once the low tire pressure warning has been illuminated, the tire pressure must be increased to the recommended cold tire placard pressure in order for the "TPMS Warning Lamp" to be turned off. The system will automatically update and the "TPMS Warning Lamp" will extinguish once the updated tire pressures have been received. The vehicle may need to be driven for up to 20 minutes above 15 mph (25 km/h) to receive this information.

For example, your vehicle may have a recommended cold (parked for more than three hours) tire pressure of 35 psi (241 kPa). If the ambient temperature is 68°F (20°C) and the measured tire pressure is 30 psi (207 kPa), a temperature drop to 20°F (-7°C) will decrease the tire pressure to approximately 26 psi (179 kPa). This tire pressure is sufficiently low enough to turn on the "TPMS Warning Light." Driving the vehicle may cause the tire pressure to rise to approximately 30 psi (207 kPa), but the "TPMS Warning Light" will still be on. In this situation, the "TPMS Warning Light" will turn off only after the tires have been inflated to the vehicle's recommended cold tire pressure value.

CAUTION!

- **The TPMS has been optimized for the original equipment tires and wheels. TPMS pressures have been established for the tire size equipped on your vehicle. Undesirable system operation or sensor damage may result when using replacement equipment that is not of the same size, type, and/or style. Aftermarket wheels can cause sensor damage. Do not use aftermarket sealants or balance beads if your vehicle is equipped with a TPMS, as damage to the sensors may result.**

(Continued)

CAUTION! (Continued)

- **After inspecting or adjusting the tire pressure always reinstall the valve stem cap. This will prevent moisture and dirt from entering the valve stem, which could damage the TPMS sensor.**

NOTE:

- The TPMS is not intended to replace normal tire care and maintenance, or to provide warning of a tire failure or condition.
- The TPMS should not be used as a tire pressure gauge while adjusting your tire pressure.
- Driving on a significantly under-inflated tire causes the tire to overheat and can lead to tire failure. Under-inflation also reduces fuel efficiency and tire tread life, and may affect the vehicle's handling and stopping ability.
- The TPMS is not a substitute for proper tire maintenance, and it is the driver's responsibility to maintain correct tire pressure, using an accurate tire pressure gage, even if under-inflation has not reached the level to trigger illumination of the "TPMS Warning Lamp."
- Seasonal temperature changes will affect tire pressure, and the TPMS will monitor the actual tire pressure in the tire.

Base System

The TPMS uses wireless technology with wheel rim mounted electronic sensors to monitor tire pressure levels. Sensors, mounted to each wheel as part of the valve stem, transmit tire pressure readings to the Receiver Module.

NOTE: It is particularly important for you to check the tire pressure in all of your tires regularly and to maintain the proper pressure.

The Basic TPMS consists of the following components:

- Receiver Module
- Four Tire Pressure Monitoring Sensors
- TPMS Telltale Warning Light

Tire Pressure Monitoring Low Tire Pressure Warnings

The "TPMS Telltale Warning Light" will illuminate in the instrument cluster, and an audible chime will be activated when one or more of the four active road tire pressures are low. Should this occur, you should stop as soon as possible, check the inflation pressure of each tire on your vehicle, and inflate each tire to the vehicle's recommended cold tire pressure value (located on the placard on the driver's-side B-Pillar). The system will automatically update and the "TPMS Warning Lamp" will extinguish once the updated tire pressures have been received.

NOTE: The vehicle may need to be driven for up to 20 minutes above 15 mph (25 km/h) to receive this information.

The "TPMS Warning Lamp" will flash on and off for 75 seconds, and remain on solid when a system fault is detected. The system fault will also sound a chime. If the ignition switch is cycled, this sequence will repeat, providing the system fault still exists. The "TPMS Warning Lamp" will turn off when the fault condition no longer exists. A system fault can occur with any of the following scenarios:

1. Jamming due to electronic devices or driving next to facilities emitting the same radio frequencies as the TPMS sensors.

2. Installing some form of aftermarket window tinting that affects radio wave signals.

3. Accumulation of excessive snow and/or ice around the wheels or wheel housings.

4. Using tire chains on the vehicle.

5. Using wheels/tires not equipped with TPMS sensors.

Vehicles with Compact Spare

1. The compact spare tire (if equipped) does not have a TPMS sensor. Therefore the TPMS will not monitor the pressure in the compact spare tire.

2. If you install the compact spare tire in place of a road tire that has a pressure below the low-pressure warning limit, upon the next ignition switch cycle, a chime will sound and the "TPMS Telltale Warning Light" will turn on.

3. After driving for up to 20 minutes above 15 mph (25 km/h), the "TPMS Telltale Warning Light" will flash on and off for 75 seconds and then remain on solid.

4. For each subsequent ignition switch cycle, a chime will sound, the "TPMS Telltale Warning Light" will flash on and off for 75 seconds and then remain on solid.

5. Once you repair or replace the original road tire and reinstall it on the vehicle in place of the compact spare tire, the TPMS will automatically update, and the "TPMS Telltale Warning Light" will turn off as long as no tire pressure is below the low-pressure warning limit in any of the four active road tires. The vehicle may need to be driven for up to 20 minutes above 15 mph (25 km/h) for the TPMS to receive this information.

Premium System – If Equipped

The TPMS uses wireless technology with wheel rim-mounted electronic sensors to monitor tire pressure levels. Sensors mounted to each wheel as part of the valve stem transmit tire pressure readings to the Receiver Module.

NOTE: It is particularly important to regularly check and maintain proper tire pressure in all the tires.

The Premium TPMS consists of the following components:

- Receiver Module
- Four TPMS Sensors
- Three Trigger Modules (mounted in three of the four wheel wells)
- Various TPMS messages, which display in the Electronic Vehicle Information Center (EVIC), and graphics displaying tire pressures
- Yellow TPMS Telltale Warning Light

TPMS Low Pressure Warnings

The "TPMS Telltale Warning Light" will illuminate in the instrument cluster, and an audible chime will be activated when one or more of the four active road tire pressures are low. In addition, the EVIC will display a Low Pressure message for three seconds and a graphic display of the pressure value(s) with the low tire(s) flashing.

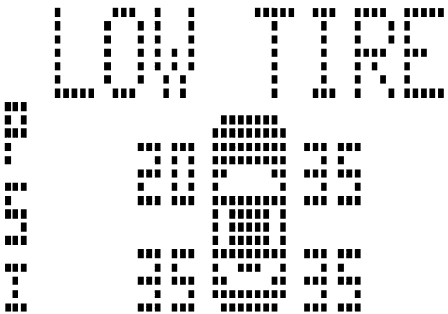

81826bed

Low Tire Pressure Display

Should a low tire condition occur on any of the four active road tire(s), you should stop as soon as possible, and inflate the low tire(s) that is flashing on the graphic display to the vehicle's recommended cold tire pressure value. The system will automatically update, the graphic display of the pressure value(s) will stop flashing, and the "TPMS Telltale Warning Light" will extinguish once the updated tire pressure(s) have been received. The vehicle may need to be driven for up to 20 minutes above 15 mph (25 km/h) to receive this information.

Check TPMS Message

The "TPMS Telltale Warning Light" will flash on and off for 75 seconds, and remain on solid when a system fault is detected. The system fault will also sound a chime. The EVIC will display a **CHECK TPM SYSTEM** message for three seconds. This text message is then followed by a graphic display, with **- -** in place of the pressure value(s) indicating which TPMS Sensor(s) is not being received.

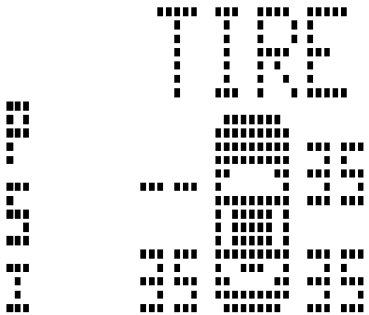

81826bd7

Check TPM System Display

If the ignition switch is cycled, this sequence will repeat, providing the system fault still exists. If the system fault no longer exists, the "TPMS Telltale Warning Light" will no longer flash, the **CHECK TPM SYSTEM** text message

will not be present, and a pressure value will be displayed instead of dashes. A system fault can occur by any of the following scenarios:

1. Jamming due to electronic devices or driving next to facilities emitting the same radio frequencies as the TPMS sensors.

2. Installing some form of aftermarket window tinting that affects radio wave signals.

3. Accumulation of excessive snow and/or ice around the wheels or wheel housings.

4. Using tire chains on the vehicle.

5. Using wheels/tires not equipped with TPMS sensors.

Vehicles with Compact Spare

1. The compact spare tire (if equipped) does not have a TPMS. Therefore, the TPMS will not monitor the pressure in the compact spare tire.

2. If you install the compact spare tire in place of a road tire that has a pressure below the low-pressure warning limit, upon the next ignition switch cycle, the "TPMS Telltale Warning Light" will remain on, a chime will sound, and the EVIC will still display a flashing pressure value in the graphic display.

3. After driving the vehicle for up to 20 minutes above 15 mph (25 km/h), the "TPMS Telltale Warning Light" will flash on and off for 75 seconds and then remain on solid. In addition, the EVIC will display a CHECK TPM SYSTEM message for three seconds and then display dashes (- -) in place of the pressure value.

4. For each subsequent ignition switch cycle, a chime will sound, the "TPMS Telltale Warning Light" will flash on and off for 75 seconds and then remain on solid, and the EVIC will display a CHECK TPM SYSTEM message for three seconds and then display dashes (- -) in place of the pressure value.

5. Once you repair or replace the original road tire, and reinstall it on the vehicle in place of the compact spare, the TPMS will update automatically. In addition, the "TPMS Telltale Warning Light" will turn off and the graphic in the EVIC will display a new pressure value instead of dashes (- -), as long no tire pressure is below the low pressure warning limit in any of the four active road tires.

NOTE: The vehicle may need to be driven for up to 20 minutes above 15 mph (25 km/h) in order for the TPMS to receive this information.

General Information

This device complies with Part 15 of the FCC rules and RSS 210 of Industry Canada. Operation is subject to the following conditions:

- This device may not cause harmful interference.
- This device must accept any interference received, including interference that may cause undesired operation.

The tire pressure sensors are regulated under one of the following licenses:

United States KR5S120123
Canada 2671-S120123

FUEL REQUIREMENTS

3.3L and 3.8L Engine

All engines are designed to meet all emissions regulations and provide excellent fuel economy and performance when using high-quality unleaded "regular" gasoline having an octane rating of 87. The use of premium gasoline is not recommended, as it will not provide any benefit over regular gasoline in these engines.

4.0L Engine

The 4.0L engine is designed to meet all emissions regulations and provide satisfactory fuel economy and performance when using high-quality unleaded gasoline having an octane range of 87 to 89. The manufacturer recommends the use of 89 octane for optimum performance. The use of premium gasoline is not recommended, as it will not provide any benefit over regular gasoline in these engines.

Light spark knock at low engine speeds is not harmful to your engine. However, continued heavy spark knock at high speeds can cause damage and immediate service is required.

Poor quality gasoline can cause problems such as hard starting, stalling and hesitations. If you experience these symptoms, try another brand of "regular" gasoline before considering service for the vehicle.

Over 40 automobile manufacturers around the world have issued and endorsed consistent gasoline specifications (the World Wide Fuel Charter, WWFC) to define fuel properties necessary to deliver enhanced emissions, engine performance, and durability for your vehicle. The manufacturer recommends the use of gasoline that meets the WWFC specifications if they are available.

Reformulated Gasoline

Many areas of the country require the use of cleaner burning gasoline referred to as "Reformulated Gasoline." Reformulated gasoline contains oxygenates, and are specifically blended to reduce vehicle emissions and improve air quality.

The manufacturer supports the use of reformulated gasoline. Properly blended reformulated gasoline will provide excellent performance and durability of engine and fuel system components.

Gasoline/Oxygenate Blends

Some fuel suppliers blend unleaded gasoline with oxygenates such as 10% ethanol, MTBE, and ETBE. Oxygenates are required in some areas of the country during the winter months to reduce carbon monoxide emissions. Fuels blended with these oxygenates may be used in your vehicle.

CAUTION!

DO NOT use gasoline containing Methanol or E85 Ethanol. Use of these blends may result in starting and driveability problems and may damage critical fuel system components.

Problems that result from using methanol/gasoline or E85 Ethanol blends are not the responsibility of the manufacturer. While MTBE is an oxygenate made from Methanol, it does not have the negative effects of Methanol.

E85 Usage In Non-Flex Fuel Vehicles

Non-FFV vehicles are compatible with gasoline containing 10% ethanol (E10). Gasoline with higher ethanol content may void the vehicle's warranty.

If a Non-FFV vehicle is inadvertently fueled with E85 fuel, the engine will have some or all of these symptoms:

- operate in a lean mode
- OBD II "Malfunction Indicator Light" on
- poor engine performance
- poor cold start and cold driveability
- increased risk for fuel system component corrosion

To fix a Non-FFV vehicle inadvertently fueled once with E85 perform the following:

- drain the fuel tank (see your authorized dealer)
- change the engine oil and oil filter

- disconnect and reconnect the battery to reset the engine controller memory

More extensive repairs will be required for prolonged exposure to E85 fuel.

MMT In Gasoline

MMT is a manganese containing metallic additive that is blended into some gasoline to increase octane. Gasoline blended with MMT provides no performance advantage beyond gasoline of the same octane number without MMT. Gasoline blended with MMT reduces spark plug life and reduces emission system performance in some vehicles. The manufacturer recommends that gasoline without MMT be used in your vehicle. The MMT content of gasoline may not be indicated on the gasoline pump, therefore, you should ask your gasoline retailer whether the gasoline contains MMT.

It is even more important to look for gasoline without MMT in Canada, because MMT can be used at levels higher than those allowed in the United States.

MMT is prohibited in Federal and California reformulated gasoline.

Materials Added to Fuel

All gasoline sold in the United States is required to contain effective detergent additives. Use of additional detergents or other additives are not needed under normal conditions and would result in additional cost. Therefore you should not have to add anything to the fuel.

Fuel System Cautions

CAUTION!

Follow these guidelines to maintain your vehicle's performance:

- **The use of leaded gas is prohibited by Federal law. Using leaded gasoline can impair engine performance and damage the emission control system.**
- **An out-of-tune engine, or certain fuel or ignition malfunctions, can cause the catalytic converter to overheat. If you notice a pungent burning odor or some light smoke, your engine may be out of tune or malfunctioning and may require immediate service. Contact your authorized dealer for service assistance.**

(Continued)

CAUTION! (Continued)

- **The use of fuel additives which are now being sold as octane enhancers is not recommended. Most of these products contain high concentrations of methanol. Fuel system damage or vehicle performance problems resulting from the use of such fuels or additives is not the responsibility of the manufacturer.**

NOTE: Intentional tampering with emissions control systems can result in civil penalties being assessed against you.

Carbon Monoxide Warnings

WARNING!

Carbon monoxide (CO) in exhaust gases is deadly.

- **To prevent carbon monoxide poisoning DO NOT inhale exhaust gases. They contain carbon monoxide, a colorless and odorless gas which can kill.**
- **NEVER run the engine in a closed area, such as a garage, and NEVER sit in a parked vehicle with the engine running for an extended period. If the vehicle is stopped in an open area with the engine running for more than a short period, adjust the ventilation system to force fresh, outside air into the vehicle.**

(Continued)

WARNING! (Continued)

- **Guard against carbon monoxide with proper maintenance. Have the exhaust system inspected every time the vehicle is raised. Have any abnormal conditions repaired promptly. Until repaired, drive with all side windows fully open.**
- **Keep the liftgate closed when driving your vehicle to prevent carbon monoxide and other poisonous exhaust gases from entering the vehicle.**

FLEXIBLE FUEL (3.3L ENGINE ONLY) — IF EQUIPPED

E85 General Information

The information in this section is for Flexible Fuel Vehicles (FFV) only. These vehicles can be identified by the unique fuel filler door label that states **Ethanol (E85) or Unleaded Gasoline Only.** This section only covers those subjects that are unique to these vehicles. Please refer to

the other sections of this manual for information on features that are common between Flexible Fuel and gasoline only powered vehicles.

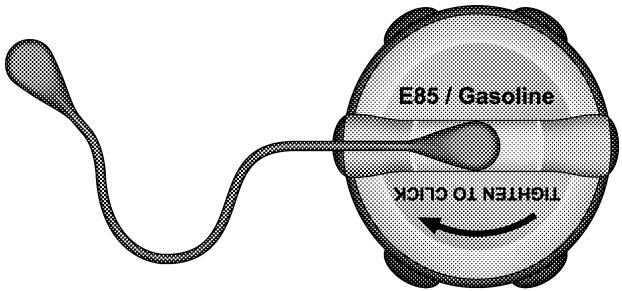

81ae46ab

E85 Fuel Cap

CAUTION!

Only vehicles with the E85 fuel filler door label can operate on E85.

81ae46a9

E85 Badge

Ethanol Fuel (E85)

E85 is a mixture of approximately 85% fuel ethanol and 15% unleaded gasoline.

WARNING!

Ethanol vapors are extremely flammable and could cause serious personal injury. Never have any smoking materials lit in or near the vehicle when removing the fuel filler tube cap (gas cap) or filling the tank. Do not use E85 as a cleaning agent and never use it near an open flame.

Fuel Requirements

If your vehicle is E85 compatible, it will operate on unleaded gasoline with an octane rating of 87, or E85 fuel, or any mixture of these two fuels.

For best results, a refueling pattern that avoids alternating between E85 and unleaded gasoline is recommended.

When you do switch fuel types, it is recommended that:

- you do not add less than 5 gal (19 L) when refueling
- you drive the vehicle immediately after refueling for at least 5 miles (8 km)

Observing these precautions will avoid possible hard starting and/or significant deterioration in driveability during warm up.

NOTE:

- Use seasonally adjusted E85 fuel (ASTM D5798). With non-seasonally adjusted E85 fuel, you may experience hard starting and rough idle following start-up, even if the above recommendations are followed, especially when the ambient temperature is below 32°F (0°C).

- Some additives used in regular gasoline are not fully compatible with E85 and may form deposits in your engine. To eliminate driveability issues that may be caused by these deposits, a supplemental gasoline additive, such as MOPAR® Injector Cleanup or Techron may be used.

Selection Of Engine Oil For Flexible Fuel Vehicles E85 and Gasoline Vehicles

FFV vehicles operated on E85 require specially formulated engine oils. These special requirements are included in MOPAR® engine oils, and in equivalent oils meeting Chrysler Specification MS-6395. The manufacturer only recommends engine oils that are API Certified and meet the requirements of Material Standard MS-6395. MS-6395 contains additional requirements, developed during extensive fleet testing, to provide additional protection to Chrysler Group LLC engines. Use MOPAR® or an equivalent oil meeting the specification MS-6395.

Starting

The characteristics of E85 fuel make it unsuitable for use when ambient temperatures fall below 0°F (-18°C). In the range of 0°F (-18°C) to 32°F (0°C), you may experience an increase in the time it takes for your engine to start, and a deterioration in driveability (sags and/or hesitations) until the engine is fully warmed up.

NOTE: Use of the engine block heater (if equipped) is beneficial for E85 startability when the ambient temperature is less than 32°F (0°C).

Cruising Range

Because E85 fuel contains less energy per gallon/liter than gasoline, you will experience an increase in fuel consumption. You can expect your miles per gallon (mpg)/miles per liter and your driving range to decrease by about 30% compared to gasoline operation.

Replacement Parts

Many components in your Flexible Fuel Vehicle (FFV) are designed to be compatible with ethanol. Always be sure that your vehicle is serviced with correct ethanol compatible parts.

CAUTION!

Replacing fuel system components with non-ethanol compatible components can damage your vehicle.

Maintenance

If you operate the vehicle using E85 fuel, follow the maintenance schedule section of this manual.

CAUTION!

Do not use ethanol mixture greater than 85% in your vehicle. It will cause difficulty in cold starting and may affect driveability.

ADDING FUEL

Fuel Filler Cap (Gas Cap)

The gas cap is located behind the fuel filler door on the left side of the vehicle. If the gas cap is lost or damaged, be sure the replacement cap is for use with this vehicle.

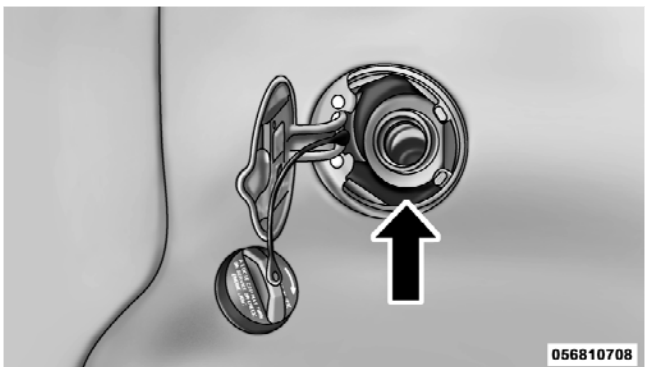

Fuel Filler Cap

NOTE: The driver's side sliding door cannot be opened while the fuel door is open. This feature operates only when the sliding door is fully closed prior to opening the fuel door.

CAUTION!

- **Damage to the fuel system or emissions control system could result from using an improper fuel tank filler tube cap (gas cap). A poorly fitting cap could let impurities into the fuel system and may cause the "Malfunction Indicator Light (MIL)" to turn on, due to fuel vapors escaping from the system.**
- **To avoid fuel spillage and overfilling, do not "top off" the fuel tank after filling.**

WARNING!

- **Never have any smoking materials lit in or near the vehicle when the gas cap is removed or the tank filled.**
- **Never add fuel when the engine is running. This is in violation of most state and federal fire regulations and will cause the MIL to turn on.**
- **A fire may result if gasoline is pumped into a portable container that is inside of a vehicle. You could be burned. Always place gas containers on the ground while filling.**

NOTE:

- When the fuel nozzle "clicks" or shuts off, the fuel tank is full.
- Tighten the fuel filler cap until you hear a "clicking" sound. This is an indication that the fuel filler cap is properly tightened.

- If the gas cap is not tightened properly, the MIL may come on. Be sure the gas cap is tightened every time the vehicle is refueled.

Loose Fuel Filler Cap Message

If the vehicle diagnostic system determines that the fuel filler cap is loose, improperly installed, or damaged, a "gASCAP" message will display in the odometer or a "CHECK GASCAP" message will be displayed in the Electronic Vehicle Information Center (EVIC). Refer to "Electronic Vehicle Information Center" in "Understanding Your Instrument Panel" for further information. Tighten the fuel filler cap until a "clicking" sound is heard. This is an indication that the fuel filler cap is properly tightened. Refer to "Onboard Diagnostic System" in "Maintaining Your Vehicle" for further information.

If the problem continues, the message will appear the next time the vehicle is started. See your authorized dealer as soon as possible.

VEHICLE LOADING

As required by National Highway Traffic Safety Administration regulations, your vehicle has a certification label affixed to the driver's side door or B-Pillar.

If seats are removed for carrying cargo, do not exceed the specified GVWR and GAWR.

Vehicle Certification Label

Your vehicle has a Vehicle Certification Label attached to the driver's door B-Pillar.

The label contains the following information:

- Name of manufacturer
- Month and year of manufacture
- Gross Vehicle Weight Rating (GVWR)

- Gross Axle Weight Rating (GAWR) — Front
- Gross Axle Weight Rating (GAWR) — Rear
- Vehicle Identification Number (VIN)
- Type of Vehicle
- Month, Day and Hour of Manufacture (MDH)

The bar code allows a computer scanner to read the Vehicle Identification Number (VIN).

Gross Vehicle Weight Rating (GVWR)
The GVWR is the total allowable weight of your vehicle. This includes driver, passengers, and cargo. The total load must be limited so that you do not exceed the GVWR.

Gross Axle Weight Rating (GAWR)
The GAWR is the maximum capacity of the front and rear axles. Distribute the load over the front and rear axles evenly. Make sure that you do not exceed either front or rear GAWR.

WARNING!

Because the front wheels drive and steer the vehicle, it is important that you do not exceed the maximum front or rear GAWR. A dangerous driving condition can result if either rating is exceeded. You could lose control of the vehicle and have an accident.

Tire Size
The tire size on the Vehicle Certification Label represents the actual tire size on your vehicle. Replacement tires must be equal to the load capacity of this tire size.

Rim Size
This is the rim size that is appropriate for the tire size listed.

Inflation Pressure
This is the cold tire inflation pressure for your vehicle, for all loading conditions up to full GAWR.

Curb Weight
The curb weight of a vehicle is defined as the total weight of the vehicle with all fluids, including vehicle fuel, at full capacity conditions, and with no occupants or cargo loaded into the vehicle. The front and rear curb weight values are determined by weighing your vehicle on a commercial scale before any occupants or cargo are added.

Overloading
The load carrying components (axle, springs, tires, wheels, etc.) of your vehicle will provide satisfactory service as long as you do not exceed the GVWR and front and rear GAWR.

The best way to figure out the total weight of your vehicle is to weigh it when it is fully loaded and ready for operation. Weigh it on a commercial scale to ensure that it is not over the GVWR.

Figure out the weight on the front and rear of the vehicle separately. It is important that you distribute the load evenly over the front and rear axles.

Overloading can cause potential safety hazards and shorten useful service life. Heavier axles or suspension components do not necessarily increase the vehicle's GVWR.

Loading

To load your vehicle properly, first figure out its empty weight, axle-by-axle and side-by-side. Store heavier items down low and be sure you distribute their weight as evenly as possible. Stow all loose items securely before driving. If weighing the loaded vehicle shows that you have exceeded either GAWR, but the total load is within the specified GVWR, you must redistribute the weight. Improper weight distribution can have an adverse effect on the way your vehicle steers and handles, and the way the brakes operate.

CAUTION!

Do not load your vehicle any heavier than the GVWR or the maximum front and rear GAWR. If you do, parts on your vehicle can break, or it can change the way your vehicle handles. This could cause you to lose control. Also, overloading can shorten the life of your vehicle.

A loaded vehicle is shown in the illustration. Note that neither the GVWR or the GAWR capacities have been exceeded.

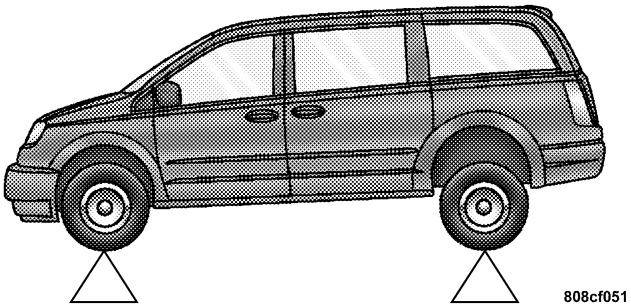

LOADING TABLE — EXAMPLE ONLY		
	Front Axle	**Rear Axle**
Empty Weight	2,140 lbs (971 kg)	1,470 lbs (667 kg)
Load (Driver, passengers, and cargo/luggage)	360 lbs (163 kg)	980 lbs (445 kg)

LOADING TABLE — EXAMPLE ONLY		
	Front Axle	**Rear Axle**
TOTAL	2,500 lbs (1 134 kg)	2,450 lbs (1 111 kg)
GAWR	2,544 lbs (1 154 kg)	2,544 lbs (1 154 kg)

A loaded vehicle is shown in the above table. Note that neither the GVWR nor the GAWR capacities have been exceeded.

NOTE: Refer to the "Vehicle Certification Label" attached to the rear of the driver's door for your vehicle's GVWR and GAWR's. This table is only an example.

TRAILER TOWING

In this section you will find safety tips and information on limits to the type of towing you can reasonably do with your vehicle. Before towing a trailer, carefully review this information to tow your load as efficiently and safely as possible.

To maintain warranty coverage, follow the requirements and recommendations in this manual concerning vehicles used for trailer towing.

Common Towing Definitions

The following trailer towing-related definitions will assist you in understanding the following information:

Gross Vehicle Weight Rating (GVWR)

The GVWR is the total allowable weight of your vehicle. This includes driver, passengers, cargo/luggage and trailer tongue weight. The total load must be limited so that you do not exceed the GVWR. Refer to "Vehicle Loading/Vehicle Certification Label" in "Starting and Operating" for further information.

Gross Trailer Weight (GTW)

The GTW is the weight of the trailer plus the weight of all cargo, consumables and equipment (permanent or temporary) loaded in or on the trailer in its "loaded and ready for operation" condition.

The recommended way to measure GTW is to put your fully loaded trailer on a vehicle scale. The entire weight of the trailer must be supported by the scale.

Gross Combination Weight Rating (GCWR)

The GCWR is the total permissible weight of your vehicle and trailer when weighed in combination.

NOTE: The GCWR rating includes a 150 lbs (68 kg) allowance for the presence of a driver.

Gross Axle Weight Rating (GAWR)
The GAWR is the maximum capacity of the front and rear axles. Distribute the load over the front and rear axles evenly. Make sure that you do not exceed either front or rear GAWR. Refer to "Vehicle Loading/Vehicle Certification Label" in "Starting and Operating" for further information.

WARNING!

It is important that you do not exceed the maximum front or rear GAWR. A dangerous driving condition can result if either rating is exceeded. You could lose control of the vehicle and have an accident.

Trailer Tongue Weight (TW)
The TW is the downward force exerted on the hitch ball by the trailer. In most cases it should not be less than 10% or more than 15% of the trailer load. You must consider this as part of the load on your vehicle.

Frontal Area
The frontal area is the maximum height multiplied by the maximum width of the front of a trailer.

Trailer Sway Control
The trailer sway control is a telescoping link that can be installed between the hitch receiver and the trailer tongue that typically provides adjustable friction associated with the telescoping motion to dampen any unwanted trailer swaying motions while traveling.

Weight-Carrying Hitch
A weight-carrying hitch supports the trailer tongue weight, just as if it were luggage located at a hitch ball or some other connecting point of the vehicle. This type of hitch is the most popular on the market today and they are commonly used to tow small- and medium-sized trailers.

Weight-Distributing Hitch

A weight-distributing system works by applying leverage through spring (load) bars. They are typically used for heavier loads to distribute trailer tongue weight to the tow vehicle's front axle and the trailer's axle(s). When used in accordance with the manufacturer's directions, it provides for a more level ride, offering more consistent steering and brake control thereby enhancing towing safety. The addition of a friction/hydraulic sway control also dampens sway caused by traffic and crosswinds and contributes positively to tow vehicle and trailer stability. Trailer sway control and a weight distributing (load equalizing) hitch are recommended for heavier tongue weights (TW), and may be required depending on vehicle and trailer configuration/loading to comply with gross axle weight rating (GAWR) requirements.

WARNING!

- **An improperly adjusted weight-distributing hitch system may reduce handling, stability, braking performance, and could result in an accident.**
- **Weight-distributing hitch systems may not be compatible with surge brake couplers. Consult with an authorized hitch and trailer manufacturer or a reputable authorized Recreational Vehicle dealer for additional information.**

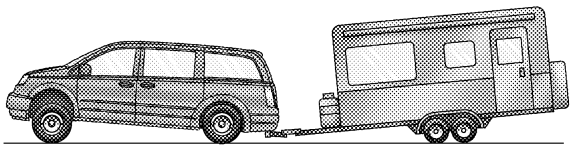

057005169

Without Weight-Distributing Hitch (Incorrect)

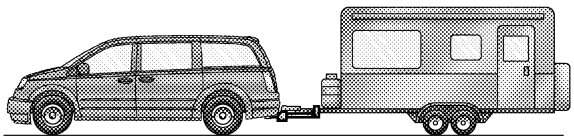

057005171

With Weight-Distributing Hitch (Correct)

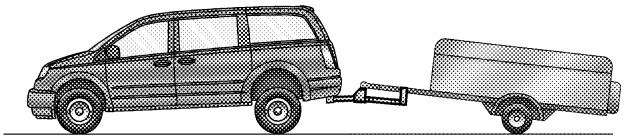

057005172

Improper Adjustment of Weight-Distributing Hitch (Incorrect)

Trailer Hitch Classification

Your vehicle may be factory-equipped for safe towing of trailers weighing over 2,000 lbs (907 kg) with the optional Trailer Tow Prep Package. See an authorized dealer for package content.

The following chart provides the industry standard for the maximum trailer weight a given trailer hitch class can tow, and should be used to assist you in selecting the correct trailer hitch for your intended towing condition.

TRAILER HITCH CLASSIFICATIONS	
Class	**Max. GTW (Gross Trailer Wt.)**
Class I - Light Duty	2,000 lbs (907 kg)
Class II - Medium Duty	3,500 lbs (1 587 kg)
Class III - Heavy Duty	5,000 lbs (2 268 kg)
Class IV - Extra Heavy Duty	10,000 lbs (4 540 kg)
Refer to the “Trailer Towing Weights (Maximum Trailer Weight Ratings)” chart for the Maximum Gross Trailer Weight (GTW) towable for your given drivetrain.	

Trailer Towing Weights (Maximum Trailer Weight Ratings)

The following chart provides the maximum trailer weight ratings towable for your given drivetrain.

Engine/Transmission	GCWR (Gross Combined Wt. Rating)	Frontal Area	Max. GTW (Gross Trailer Wt.)	Max. Tongue Wt.
3.3L, 3.8L and 4.0L/ Automatic	7,000 lbs (3 175 kg)	22 sq ft (2.0 sq m)	Up to 2 persons & Luggage 1,800 lbs (816 kg)	180 lbs (82 kg)
	7,000 lbs (3 175 kg)	22 sq ft (2.0 sq m)	3 to 5 persons & Luggage 1,350 lbs (612 kg)	135 lbs (61 kg)
	7,000 lbs (3 175 kg)	22 sq ft (2.0 sq m)	6 to 7 persons & Luggage 1,000 lbs (454 kg)	100 lbs (45 kg)

Engine/Transmission	GCWR (Gross Combined Wt. Rating)	Frontal Area	Max. GTW (Gross Trailer Wt.)	Max. Tongue Wt.
3.8L and 4.0L/ Automatic (with Tow Package)	9,000 lbs (4 082 kg)	40 sq ft (3.72 sq m)	Up to 2 persons & Luggage 3,800 lbs (1 723 kg)*	380 lbs (172 kg)
	9,000 lbs (4 082 kg)	40 sq ft (3.72 sq m)	3 to 5 persons & Luggage 3,350 lbs (1 519 kg)*	335 lbs (152 kg)
	9,000 lbs (4 082 kg)	40 sq ft (3.72 sq m)	6 to 7 persons & Luggage 3,000 lbs (1 360 kg)*	300 lbs (136 kg)
* For vehicles equipped with Fold-in-Floor seating, the Gross Trailer Weight must be reduced by 100 lbs (45 kg). Refer to local laws for maximum trailer towing speeds.				
NOTE: The trailer tongue weight must be considered as part of the combined weight of occupants and cargo, and should never exceed the weight referenced on the Tire and Loading Information placard. Refer to "Tire Safety Information" in "Starting and Operating" for further information.				

Trailer and Trailer Tongue Weight

Always load a trailer with 60% to 65% of the weight in the front of the trailer. This places 10% to 15% of the Gross Trailer Weight (GTW) on the tow hitch of your vehicle. Loads balanced over the wheels or heavier in the rear can cause the trailer to sway **severely** side-to-side, which will cause loss of control of the vehicle and trailer. Failure to load trailers heavier in front is the cause of many trailer accidents.

Never exceed the maximum trailer tongue weight stamped on your bumper or trailer hitch.

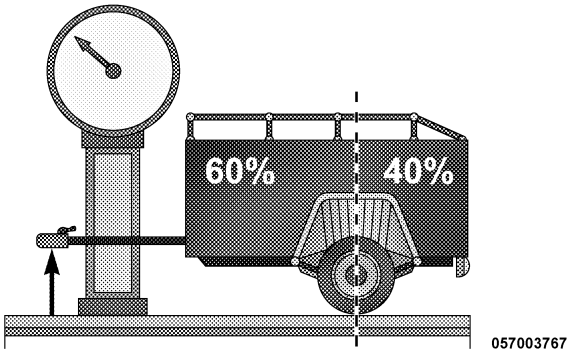

Consider the following items when computing the weight on the rear axle of the vehicle:

- The tongue weight of the trailer.
- The weight of any other type of cargo/luggage or equipment put in or on your vehicle.
- The weight of the driver and all passengers.

NOTE: Remember that everything put into or on the trailer adds to the load on your vehicle. Also, additional factory-installed options, or authorized dealer-installed options, must be considered as part of the total load on your vehicle. Refer to the "Tire Safety Information/Tire and Loading Information Placard" in "Starting and Operating" for the maximum combined weight of occupants and cargo for your vehicle.

Towing Requirements

To promote proper break-in of your new vehicle drivetrain components, the following guidelines are recommended:

CAUTION!

- **Do not tow a trailer at all during the first 500 miles (805 km) the new vehicle is driven. The engine, axle or other parts could be damaged.**
- **Then, during the first 500 miles (805 km) that a trailer is towed, do not drive over 50 mph (80 km/h) and do not make starts at full throttle. This helps the engine and other parts of the vehicle wear in at the heavier loads.**

Perform the maintenance listed in the "Maintenance Schedule." Refer to "Maintenance Schedule" for further information. When towing a trailer, never exceed the GAWR or GCWR ratings.

WARNING!

Improper towing can lead to an injury accident. Follow these guidelines to make your trailer towing as safe as possible:

- **Make certain that the load is secured in the trailer and will not shift during travel. When trailering cargo that is not fully secured, dynamic load shifts can occur that may be difficult for the driver to control. You could lose control of your vehicle and have an accident.**
- **When hauling cargo or towing a trailer, do not overload your vehicle or trailer. Overloading can cause a loss of control, poor performance or damage to brakes, axle, engine, transmission, steering, suspension, chassis structure or tires.**

(Continued)

WARNING! (Continued)

- **Safety chains must always be used between your vehicle and trailer. Always connect the chains to the frame or hook retainers of the vehicle hitch. Cross the chains under the trailer tongue and allow enough slack for turning corners.**
- **Vehicles with trailers should not be parked on a grade. When parking, apply the parking brake on the tow vehicle. Put the tow vehicle automatic transmission in PARK. Always, block or "chock" the trailer wheels.**
- **GCWR must not be exceeded.**
- **Total weight must be distributed between the tow vehicle and the trailer such that the following four ratings are not exceeded:**
  1. **GVWR**
  2. **GTW**

(Continued)

WARNING! (Continued)

3. GAWR

4. Trailer tongue weight rating for that trailer hitch. (This requirement may limit the ability to always achieve the 10% to 15% range of trailer tongue weight as a percentage of total trailer weight.)

Towing Requirements – Tires

- Do not attempt to tow a trailer while using a compact spare tire.
- Proper tire inflation pressures are essential to the safe and satisfactory operation of your vehicle. Refer to "Tires – General Information" in "Starting and Operating" for proper tire inflation procedures.
- Check the trailer tires for proper tire inflation pressures before trailer usage.
- Check for signs of tire wear or visible tire damage before towing a trailer. Refer to "Tires – General Information" in "Starting and Operating" for the proper inspection procedure.
- When replacing tires, refer to "Tires – General Information" in "Starting and Operating" for proper tire replacement procedures. Replacing tires with a higher load carrying capacity will not increase the vehicle's GVWR and GAWR limits.

Towing Requirements – Trailer Brakes

- Do **not** interconnect the hydraulic brake system or vacuum system of your vehicle with that of the trailer. This could cause inadequate braking and possible personal injury.

- An electronically actuated trailer brake controller is required when towing a trailer with electronically actuated brakes. When towing a trailer equipped with a hydraulic surge actuated brake system, an electronic brake controller is not required.
- Trailer brakes are recommended for trailers over 1,000 lbs (454 kg) and required for trailers in excess of 2,000 lbs (907 kg).

CAUTION!

If the trailer weighs more than 1,000 lbs (454 kg) loaded, it should have its own brakes and they should be of adequate capacity. Failure to do this could lead to accelerated brake lining wear, higher brake pedal effort, and longer stopping distances.

WARNING!

- **Do not connect trailer brakes to your vehicle's hydraulic brake lines. It can overload your brake system and cause it to fail. You might not have brakes when you need them and could have an accident.**
- **Towing any trailer will increase your stopping distance. When towing you should allow for additional space between your vehicle and the vehicle in front of you. Failure to do so could result in an accident.**

Towing Requirements – Trailer Lights and Wiring

Whenever you pull a trailer, regardless of the trailer size, stop lights and turn signals on the trailer are required for motoring safety.

The Trailer Tow Package may include a four-pin or a seven-pin wiring harness. Use a factory approved trailer harness and connector.

NOTE: Do not cut or splice wiring into the vehicles wiring harness.

The electrical connections are all complete to the vehicle but you must mate the harness to a trailer connector. Refer to the following four-pin connector and seven-pin connector illustrations.

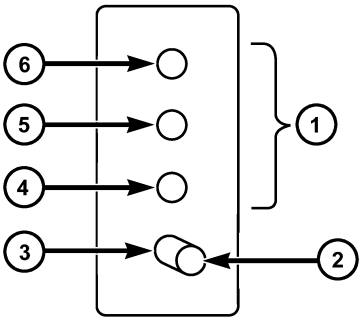

057003766

Four-Pin Connector

1 — Female Pins	4 — Park
2 — Male Pin	5 — Left Stop/Turn
3 — Ground	6 — Right Stop/Turn

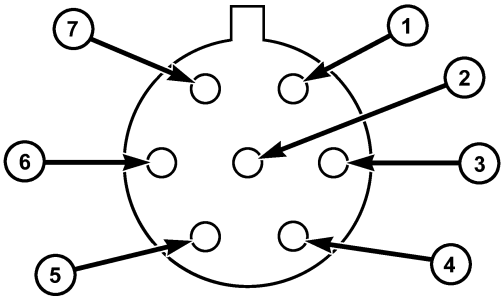

057003765

Seven-Pin Connector

1 — Battery	5 — Ground
2 — Backup Lamps	6 — Left Stop/Turn
3 — Right Stop/Turn	7 — Running Lamps
4 — Electric Brakes	

Towing Tips

Before setting out on a trip, practice turning, stopping and backing the trailer in an area away from heavy traffic.

Automatic Transmission

The DRIVE gear can be selected when towing. However, if frequent shifting occurs while in DRIVE, move the shift lever into third gear (with four-speed transmission) or fifth gear (with six-speed transmission).

NOTE: Moving the shift lever into third gear (with four-speed transmission) or fifth gear (with six-speed transmission) while operating the vehicle under heavy operating conditions will improve performance and extend transmission life by reducing excessive shifting and heat build up. This action will also provide better engine braking.

The automatic transmission fluid and filter should be changed if you REGULARLY tow a trailer for more than 45 minutes of continuous operation. Refer to "Maintenance Schedule" for the proper maintenance intervals.

NOTE:

- Check the automatic transmission fluid level before towing.
- The six-speed automatic transmission is sealed and requires an authorized dealer to check the transmission fluid.

Electronic Speed Control – If Equipped

- Do not use in hilly terrain or with heavy loads.
- When using the speed control, if you experience speed drops greater than 10 mph (16 km/h), disengage until you can get back to cruising speed.
- Use speed control in flat terrain and with light loads to maximize fuel efficiency.

Cooling System

To reduce potential for engine and transmission overheating, take the following actions:

- ***City Driving***

When stopped for short periods of time, shift the transmission into NEUTRAL but do not increase engine idle speed.

- ***Highway Driving***

Reduce speed.

- ***Air Conditioning***

Turn off temporarily.

RECREATIONAL TOWING (BEHIND MOTORHOME, ETC.)

CAUTION!

Towing this vehicle behind another vehicle (flat-towing with all four wheels on the ground) is not recommended.

NOTE: If the vehicle requires towing, make sure all four wheels are off the ground.

WHAT TO DO IN EMERGENCIES

CONTENTS

- Hazard Warning Flasher 412
- If Your Engine Overheats 412
- Jacking And Tire Changing 413
  - Jack Location 414
  - Spare Tire Removal 414
  - Preparations For Jacking 415
  - Jacking Instructions 416
  - Wheel Nuts 423
  - Secure The Spare Tire 424
- Jump-Starting Procedure 426
  - Preparations For Jump-Start 427
  - Jump-Starting Procedure 428
- Freeing A Stuck Vehicle 430
- Towing A Disabled Vehicle 431
  - Towing With The Ignition Key 431

HAZARD WARNING FLASHER

The Hazard Warning flasher switch is located in the center of the instrument panel above the radio.

Press the switch to turn on the Hazard Warning flasher. When the switch is activated, all directional turn signals will flash on and off to warn oncoming traffic of an emergency. Press the switch a second time to turn off the Hazard Warning flasher.

This is an emergency warning system and should not be used when the vehicle is in motion. Use it when your vehicle is disabled and is creating a safety hazard for other motorists.

When you must leave the vehicle to seek assistance, the Hazard Warning flasher will continue to operate even though the ignition switch is OFF.

NOTE: With extended use, the Hazard Warning flasher may wear down your battery.

IF YOUR ENGINE OVERHEATS

In any of the following situations, you can reduce the potential for overheating by taking the appropriate action.

- On the highways — slow down.
- In city traffic — while stopped, place the transmission in NEUTRAL, but do not increase engine idle speed.

NOTE: There are steps that you can take to slow down an impending overheat condition:

- If your air conditioner (A/C) is on, turn it off. The A/C system adds heat to the engine cooling system and turning the A/C off can help remove this heat.
- You can also turn the temperature control to maximum heat, the mode control to floor and the blower control to high. This allows the heater core to act as a supplement to the radiator and aids in removing heat from the engine cooling system.

CAUTION!

Driving with a hot cooling system could damage your vehicle. If temperature gauge reads "H", pull over and stop the vehicle. Idle the vehicle with the air conditioner turned off until the pointer drops back into the normal range. If the pointer remains on the "H", turn the engine off immediately, and call for service.

WARNING!

You or others can be badly burned by hot engine coolant (antifreeze) or steam from your radiator. If you see or hear steam coming from under the hood, do not open the hood until the radiator has had time to cool. Never try to open a cooling system pressure cap when the radiator or coolant bottle is hot.

JACKING AND TIRE CHANGING

WARNING!

- **Getting under a jacked-up vehicle is dangerous. The vehicle could slip off the jack and fall on you. You could be crushed. Never get any part of your body under a vehicle that is on a jack. If you need to get under a raised vehicle, take it to a service center where it can be raised on a lift.**
- **The jack is designed to use as a tool for changing tires only. The jack should not be used to lift the vehicle for service purposes. The vehicle should be jacked on a firm level surface only. Avoid ice or slippery areas.**
- **If it is necessary to retrieve the spare tire from under the vehicle on the side of the vehicle close to moving traffic. Pull far enough off the road to avoid the danger of being hit.**

Jack Location

The jack, jack handle and winch handle tools are stowed behind the rear left side trim panel in the rear cargo area. Turn the two cover latches to release the cover.

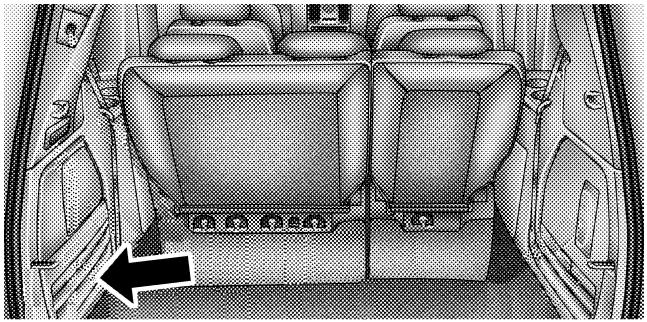

060505161

Jack And Tool Location

Remove the pouch containing the scissors jack, jack handle, and tools.

Spare Tire Removal

The spare tire is stowed inside a protective cover located under the center of the vehicle between the front doors by means of a cable winch mechanism. The "spare tire drive" nut is located on the floor, under a plastic cap at the front of the floor console.

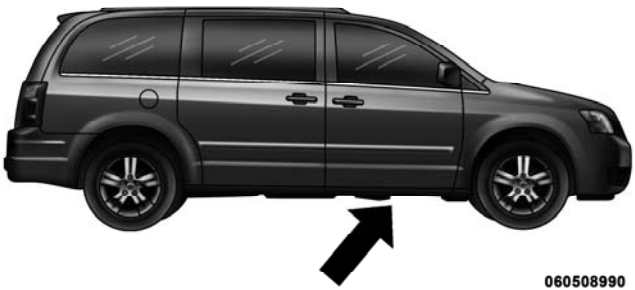

060508990

Spare Tire Location

NOTE: The base console, if equipped, must be removed to raise and lower the spare tire. Refer to "Console Features" in "Understanding the Features of Your Vehicle" for console removal procedure.

The tool pouch contains three pieces and can be assembled into a spare tire hook; to remove the compact spare tire/cover assembly from under the vehicle, or a Winch "T" Handle; to raise/lower the compact spare tire/cover assembly.

Preparations For Jacking

1. Park the vehicle on a firm, level surface. Avoid ice or slippery areas.

WARNING!

Do not attempt to change a tire on the side of the vehicle close to moving traffic. Pull far enough off the road to avoid being hit when operating the jack or changing the wheel.

2. Set the parking brake.
3. Place the shift lever into PARK.
4. Turn OFF the ignition.
5. Turn on the Hazard Warning flasher.

6. Block both the front and rear of the wheel diagonally opposite the jacking position. For example, if changing the right front tire, block the left rear wheel.

NOTE: Passengers should not remain in the vehicle when the vehicle is being jacked.

Jacking Instructions

WARNING!

Carefully follow these tire changing warnings to help prevent personal injury or damage to your vehicle:

- **Always park on a firm, level surface as far from the edge of the roadway as possible before raising the vehicle.**
- **Block the wheel diagonally opposite the wheel to be raised.**
- **Set the parking brake firmly and set an automatic transmission in PARK; a manual transmission in REVERSE.**

(Continued)

WARNING! (Continued)

- **Never start or run the engine with the vehicle on a jack.**
- **Do not let anyone sit in the vehicle when it is on a jack.**
- **Do not get under the vehicle when it is on a jack.**
- **Only use the jack in the positions indicated and for lifting this vehicle during a tire change.**
- **If working on or near a roadway, be extremely careful of motor traffic.**
- **To assure that spare tires, flat or inflated, are securely stowed, spares must be stowed with the valve stem facing the ground.**
- **Turn on the Hazard Warning flasher.**

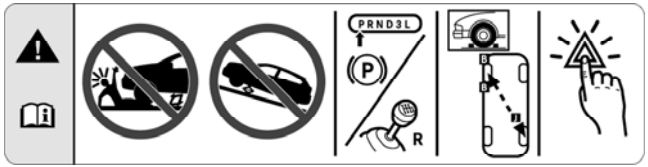

Jack Warning Label

1. Loosen (but do not remove) the wheel lug nuts by turning them to the left one turn while the wheel is still on the ground.

2. To remove the compact spare tire/cover assembly, assemble the winch handle extensions to form a “T” and fit the winch “T” handle over the drive nut, refer to “2” configuration in tool graphics. Rotate the nut to the left until the winch mechanism stops turning freely. This will allow enough slack in the cable to allow you to pull the spare tire out from under the vehicle.

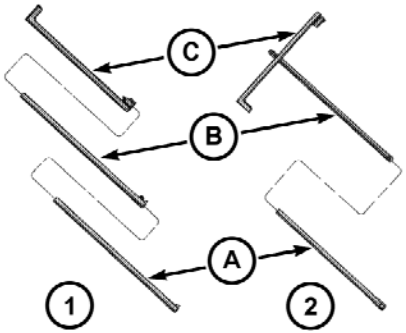

060505160

Tools

1A – Spare Tire Hook (Piece 1)	2A – Winch “T” Handle (Piece 1)
1B – Spare Tire Hook (Piece 2)	2B – Winch “T” Handle (Piece 2)
1C – Spare Tire Hook (Piece 3)	2C – Winch “T” Handle (Piece 3)

CAUTION!

The winch mechanism is designed for use with the winch "T" handle only. Use of an air wrench or other power tools is not recommended and can damage the winch.

3. Assemble the winch handle extensions to form the Spare Tire Hook and pull the compact spare tire/cover assembly from under the vehicle, refer to "1" configuration in tool graphics.

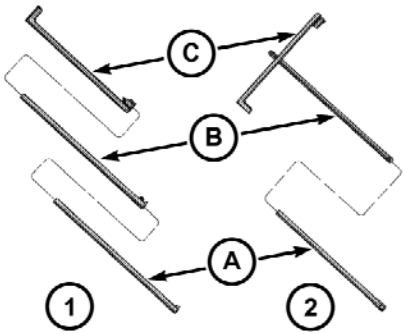

060505160

Tools

1A – Spare Tire Hook (Piece 1)	2A – Winch "T" Handle (Piece 1)
1B – Spare Tire Hook (Piece 2)	2B – Winch "T" Handle (Piece 2)
1C – Spare Tire Hook (Piece 3)	2C – Winch "T" Handle (Piece 3)

WARNING!

Getting under a jacked-up vehicle is dangerous. The vehicle could slip off the jack and fall on you. You could be crushed. Never get any part of your body under a vehicle that is on a jack. If you need to get under a raised vehicle, take it to a service center where it can be raised on a lift.

NOTE: If either front tire is flat, it may be necessary to jack up the vehicle to remove the compact spare tire/cover assembly from under the vehicle. Refer to jack engagement locations in the following steps for proper jack placement.

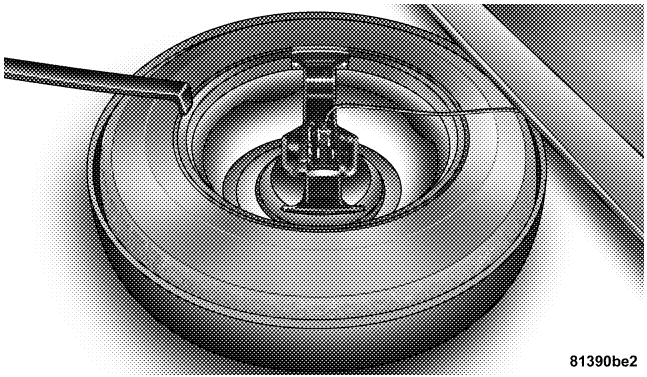

Spare Tire Hook And Removal

4. When the compact spare tire/cover assembly is clear of the vehicle, stand the tire/cover assembly upright and remove the wheel spacer by squeezing the two retainer tabs together.

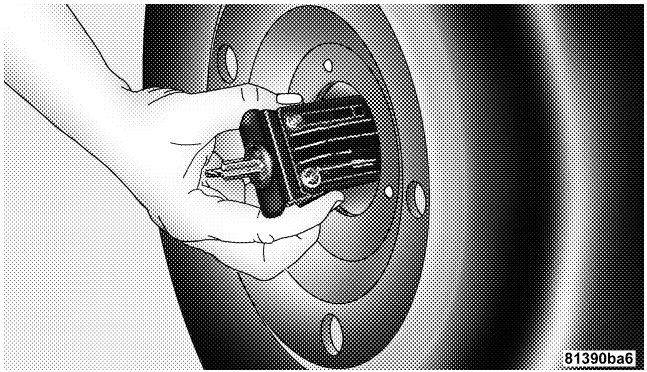

Squeezing Winch Retainer Tabs

5. There are two jack engagement locations on each side of the vehicle body. These locations are on the sill flange of the vehicle body.

NOTE:

- Rear jack locations are between a pair of down-facing tabs on the sill flange of the vehicle side body.
- Front jack locations are on the sill flange of the vehicle side body, and is located 6 in. (150 mm) from door edge.

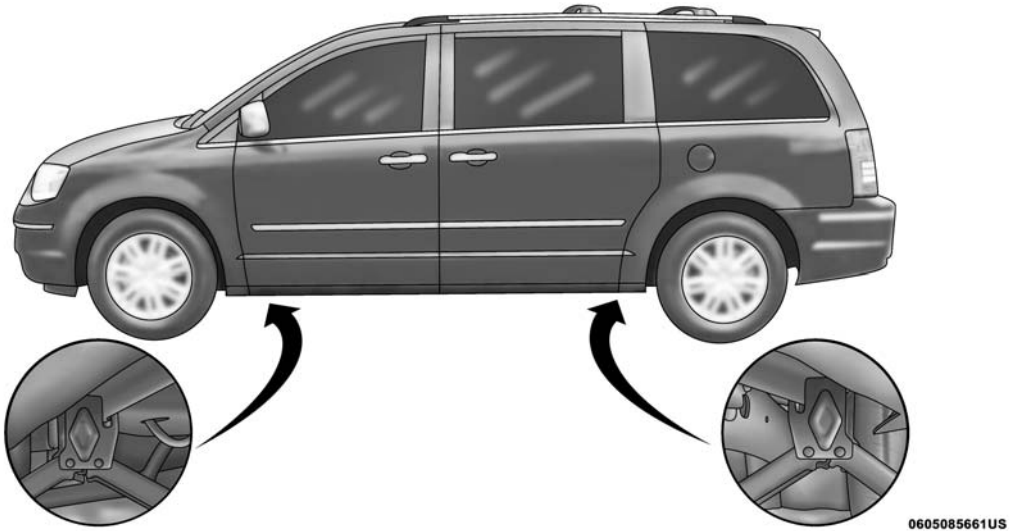

Jacking Locations

CAUTION!

Do not attempt to raise the vehicle by jacking on locations other than those indicated in Step 5.

6. Place the wrench on the jack screw and turn to the right until the jack head is properly engaged in the described location. **Do not raise the vehicle until you are sure the jack is securely engaged.**

7. Raise the vehicle by turning the jack screw to the right, using the swivel wrench. Raise the vehicle only until the tire just clears the surface and enough clearance is obtained to install the spare tire. Minimum tire lift provides maximum stability.

WARNING!

Raising the vehicle higher than necessary can make the vehicle less stable. It could slip off the jack and hurt someone near it. Raise the vehicle only enough to remove the tire.

8. Remove the wheel lug nuts, for vehicles with wheel covers, remove the cover from the wheel by hand. Do not pry the wheel cover off. Then pull the wheel off the hub.

9. Install the compact spare tire. Lightly tighten the lug nuts. To avoid the risk of forcing the vehicle off the jack, do not tighten the lug nuts fully until the vehicle has been lowered.

NOTE:

- Do not install the wheel cover on the compact spare.
- Do not use a hammer or force to install the wheel covers.

10. Lower the vehicle by turning the jack screw to the left.

11. Finish tightening the lug nuts. Push down on the wrench while tightening for increased leverage. Alternate lug nuts until each nut has been tightened twice. The correct wheel nut tightness is 95 ft lbs (130 N·m). If in doubt about the correct tightness, have them checked with a torque wrench by your authorized dealer or at a service station.

12. Lower the jack to its fully-closed position.

WARNING!

A loose tire or jack thrown forward in a collision or hard stop could endanger the occupants of the vehicle. Always stow the jack parts and the spare tire in the places provided. Have the deflated (flat) tire repaired or replaced immediately.

13. Place the deflated (flat) tire and compact spare tire cover assembly. in the rear cargo area. **Do not stow the deflated tire in the spare tire location.** Have the full-sized tire repaired or replaced, as soon as possible.

14. Stow the cable and wheel spacer before driving the vehicle. Reassemble the winch handle extensions to form a "T" and fit the winch "T" handle over the drive nut. Rotate the nut to the right until the winch mechanism clicks at least three times.

15. Stow the jack, jack handle and winch handle tools.

16. Check the compact spare tire pressure as soon as possible. Correct the tire pressure, as required.

Wheel Nuts

All wheel nuts should be tightened occasionally, to eliminate the possibility of wheel studs being sheared or the bolt holes in the wheels becoming elongated. This is especially important during the first few hundred miles

of operation, and after each time a tire is changed, to allow the wheel nuts to become properly set. All nuts should first be firmly seated against the wheel. The nuts should then be tightened to recommended torque. Tighten the nuts to final torque in increments. Progress around the bolt circle, tightening the nut opposite to the nut just previously tightened until final torque is achieved. Recommended torque is 95 ft lbs (130 N·m).

Secure The Spare Tire

1. Assemble the winch handle extensions to form a "T" and fit the winch "T" handle over the drive nut. Rotate the nut to the left until the winch mechanism stops turning freely. This will allow enough slack in the cable to allow you to pull the wheel spacer out from under the vehicle.

WARNING!

A loose compact spare tire/cover assembly, thrown forward in a collision or hard stop could endanger the occupants of the vehicle. Always stow the compact spare tire with the cover assembly in the place provided.

CAUTION!

The winch mechanism is designed for use with the winch "T" handle only. Use of an air wrench or other power tools is not recommended and can damage the winch.

2. Assemble the winch handle extensions to form the spare tire hook, and pull the wheel spacer from under the vehicle.

3. Turn the compact spare tire so that the valve stem is down, and place the tire into the spare tire/cover assembly. Slide the wheel spacer through the center of the wheel and spare tire/cover assembly, so that the two retainer tabs snap out and engage the spare tire cover on the opposite side.

CAUTION!

The compact spare tire/cover assembly must be used when the compact spare tire is stored. Failure to use this cover could drastically reduce the life of the compact spare tire.

WARNING!

Verify that both retainer tabs of the wheel spacer have been properly extended through the center of the wheel and spare tire/cover assembly. Failure to properly engage both retainer tabs could result in loss of the spare tire and cover assembly, which will cause vehicle damage and may cause loss of vehicle control.

4. Using the winch "T" handle, rotate the drive nut to the right until the compact spare tire/cover assembly is drawn into place against the underside of the vehicle.

5. Continue to rotate the nut to the right until you hear the winch mechanism click three times. It cannot be overtightened. Check under the vehicle to ensure the compact spare tire/cover assembly is positioned correctly against the underside of the vehicle.

CAUTION!

The winch mechanism is designed specifically to stow a compact spare tire only. Do not attempt to use the winch to stow the full size flat tire, or any other full-size tire. Vehicle damage may result.

JUMP-STARTING PROCEDURE

If your vehicle has a discharged battery it can be jump-started using a set of jumper cables and a battery in another vehicle or by using a portable battery booster pack. Jump-starting can be dangerous if done improperly so please follow the procedures in this section carefully.

NOTE: When using a portable battery booster pack follow the manufacturer's operating instructions and precautions.

CAUTION!

Do not use a portable battery booster pack or any other booster source with a system voltage greater than 12 Volts or damage to the battery, starter motor, alternator or electrical system may occur.

WARNING!

Do not attempt jump-starting if the battery is frozen. It could rupture or explode and cause personal injury.

Preparations for Jump-Start

The battery in your vehicle is located on the left side of the engine compartment.

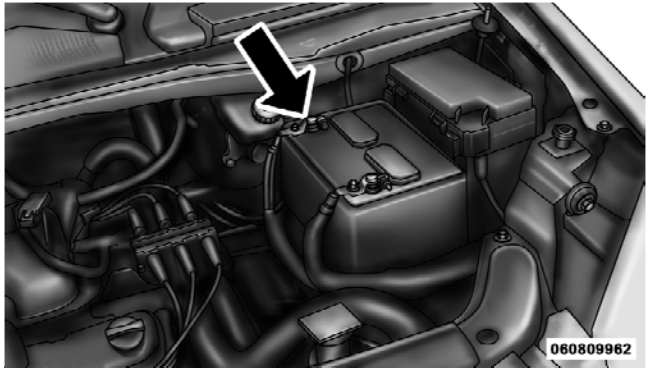

Positive Battery Post

WARNING!

- **Take care to avoid the radiator cooling fan whenever the hood is raised. It can start anytime the ignition switch is on. You can be injured by moving fan blades.**
- **Remove any metal jewelry such as watch bands or bracelets that might make an inadvertent electrical contact. You could be seriously injured.**
- **Batteries contain sulfuric acid that can burn your skin or eyes and generate hydrogen gas which is flammable and explosive. Keep open flames or sparks away from the battery.**

1. Set the parking brake, shift the automatic transmission into PARK and turn the ignition to LOCK.

2. Turn off the heater, radio, and all unnecessary electrical accessories.

3. If using another vehicle to jump-start the battery, park the vehicle within the jumper cables reach, set the parking brake and make sure the ignition is OFF.

WARNING!

Do not allow vehicles to touch each other as this could establish a ground connection and personal injury could result.

Jump-Starting Procedure

WARNING!

Failure to follow this procedure could result in personal injury or property damage due to battery explosion.

CAUTION!

Failure to follow these procedures could result in damage to the charging system of the booster vehicle or the discharged vehicle.

1. Connect the positive **(+)** end of the jumper cable to the positive **(+)** post of the discharged vehicle.

2. Connect the opposite end of the positive **(+)** jumper cable to the positive **(+)** post of the booster battery.

3. Connect the negative end **(-)** of the jumper cable to the negative **(-)** post of the booster battery.

4. Connect the opposite end of the negative **(-)** jumper cable to a good engine ground (exposed metal part of the discharged vehicle's engine) away from the battery and the fuel injection system.

WARNING!

Do not connect the cable to the negative post (-) of the discharged battery. The resulting electrical spark could cause the battery to explode and could result in personal injury.

5. Start the engine in the vehicle that has the booster battery, let the engine idle a few minutes, and then start the engine in the vehicle with the discharged battery. Once the engine is started, remove the jumper cables in the reverse sequence:

6. Disconnect the negative **(-)** jumper cable from the negative **(-)** post of the vehicle with the discharged battery.

7. Disconnect the negative end **(-)** of the jumper cable from the negative **(-)** post of the booster battery.

8. Disconnect the opposite end of the positive **(+)** jumper cable from the positive **(+)** post of the booster battery.

9. Disconnect the positive **(+)** end of the jumper cable from the positive **(+)** post of the discharged vehicle.

If frequent jump-starting is required to start your vehicle you should have the battery and charging system inspected at your authorized dealer.

CAUTION!

Accessories that can be plugged into the vehicle power outlets draw power from the vehicle's battery, even when not in use (i.e., cellular phones, etc.). Eventually, if plugged in long enough, the vehicle's battery will discharge sufficiently to degrade battery life and/or prevent the engine from starting.

FREEING A STUCK VEHICLE

If your vehicle becomes stuck in mud, sand or snow, it can often be moved by a rocking motion. Turn your steering wheel right and left to clear the area around the front wheels. Then move the shift lever back and forth between REVERSE and DRIVE. Using minimal accelerator pedal pressure to maintain the rocking motion, without spinning the wheels, is most effective.

CAUTION!

- **When "rocking" a stuck vehicle by moving between 1st and REVERSE, do not spin the wheels faster than 15 mph (24 km/h), or drivetrain damage may result.**

(Continued)

CAUTION! (Continued)

- **Revving the engine or spinning the wheels too fast may lead to transmission overheating and failure. It can also damage the tires. Do not spin the wheels above 30 mph (48 km/h) while in gear (no transmission shifting occurring).**

NOTE: To improve the vehicle's traction when starting off in deep snow, sand or gravel, it may be desirable to switch the Electronic Stability Program (ESP) to "Partial Off" mode. Refer to "Electronic Brake Control System" in "Starting and Operating" for further information.

WARNING!

Fast spinning tires can be dangerous. Forces generated by excessive wheel speeds may cause damage, or even failure, of the axle and tires. A tire could explode and injure someone. Do not spin your vehicle's wheels faster than 30 mph (48 km/h) or for longer than 30 seconds continuously without stopping when you are stuck and do not let anyone near a spinning wheel, no matter what the speed.

TOWING A DISABLED VEHICLE

Towing With The Ignition Key

Your vehicle may be towed under the following conditions:

- The shift lever must be in NEUTRAL.
- The distance to be traveled must not exceed 15 miles (25 km).
- The towing speed must not exceed 30 mph (50 km/h).

CAUTION!

Exceeding these towing limits may cause severe transmission damage. Such damage is not covered by the New Vehicle Limited Warranty.

If the transmission is inoperative, or if the vehicle is to be towed more than 15 miles (25 km), the vehicle must be towed with the front wheels off the ground.

CAUTION!

- **Do not attempt to tow this vehicle from the front with sling-type towing equipment. Damage to the front fascia will result.**

(Continued)

CAUTION! (Continued)

- **Always use wheel lift equipment when towing from the front. The only other approved method of towing is with a flatbed truck.**
- **Do not tow the vehicle from the rear. Damage to the rear sheet metal, liftgate and fascia will occur.**
- **Do not push or tow this vehicle with another vehicle as damage to the bumper fascia and transmission may result.**
- **If the vehicle being towed requires steering, the ignition switch must be in the ON position, not in the LOCK or ACC positions.**

If it is necessary to use the accessories while being towed (wipers, defrosters, etc.), the key must be in the ON position, not the ACC position. Make certain the transmission remains in NEUTRAL.

Towing Without The Ignition Key

Special care must be taken when the vehicle is towed with the ignition in the OFF position. The only approved method of towing without the ignition key is with a flatbed truck. Proper towing equipment is necessary to prevent damage to the vehicle.

Towing This Vehicle Behind Another Vehicle (Flat Towing With All Four Wheels On The Ground)

Flat towing of vehicles equipped with an automatic transmission, is only permitted within the limitations described in this section.

Towing This Vehicle Behind Another Vehicle With A Tow Dolly

The manufacturer **does not recommend** that you tow a front wheel drive vehicle on a tow dolly. Vehicle damage may occur.

MAINTAINING YOUR VEHICLE

CONTENTS

■ Engine Compartment — 3.3/3.8L 435
■ Engine Compartment — 4.0L 436
■ Onboard Diagnostic System — OBD II 437
□ Loose Fuel Filler Cap Message 437
■ Emissions Inspection And Maintenance Programs 438
■ Replacement Parts 440
■ Dealer Service 440
■ Maintenance Procedures 440
□ Engine Oil 441
□ Engine Oil Filter 444
□ Engine Air Cleaner Filter 444
□ Exhaust System 445
□ Maintenance-Free Battery 447
□ Air Conditioner Maintenance 448
□ Body Lubrication 451
□ Windshield Wiper Blades 451
□ Cooling System 453

- Brakes 458
- Automatic Transmission 461
- Appearance Care And Protection From Corrosion 464
- Cleaning The Instrument Panel Cupholders 469

■ Fuses 470
- Totally Integrated Power Module (TIPM) . . 470

■ Vehicle Storage 479

■ Replacement Bulbs 479

■ Bulb Replacement 480
- High Intensity Discharge Headlamps (HID) — If Equipped 480
- Quad Headlamps 481
- Front Park/Turn Signal Lamp 481
- Front Side Marker Lamp 482
- Fog Lamp 482
- Rear Tail, Stop, Turn Signal, Side Marker And Backup Lamp 482
- Center High-Mounted Stop Lamp (CHMSL) 484
- License Lamp 484

■ Fluid Capacities 485

■ Fluids, Lubricants And Genuine Parts 486
- Engine 486
- Chassis 487

ENGINE COMPARTMENT — 3.3/3.8L

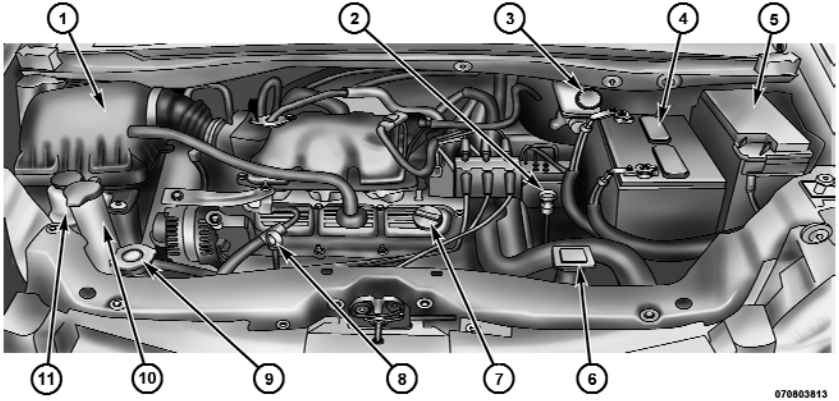

1 — Air Cleaner Filter
2 — Automatic Transmission Dipstick (3.3L Only)
3 — Brake Fluid Reservoir
4 — Battery
5 — Totally Integrated Power Module
6 — Engine Coolant Reservoir
7 — Engine Oil Fill
8 — Engine Oil Dipstick
9 — Coolant Pressure Cap
10 — Washer Fluid Reservoir
11 — Power Steering Fluid Reservoir

ENGINE COMPARTMENT — 4.0L

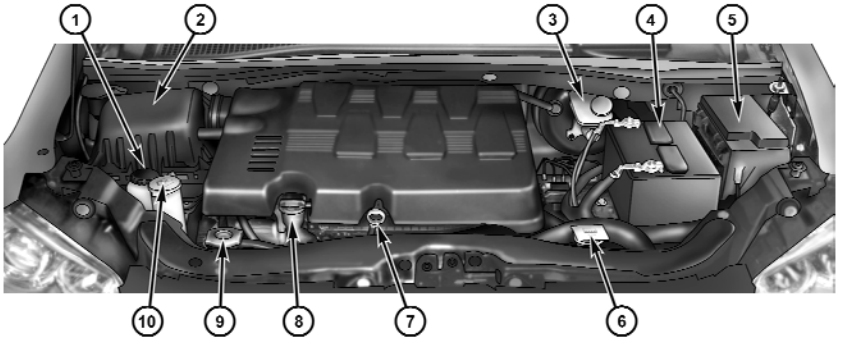

071207164

1 — Power Steering Fluid Reservoir
2 — Air Cleaner Filter
3 — Brake Fluid Reservoir
4 — Battery
5 — Totally Integrated Power Module
6 — Engine Coolant Reservoir
7 — Engine Oil Dipstick
8 — Engine Oil Fill
9 — Coolant Pressure Cap
10 — Washer Fluid Reservoir

ONBOARD DIAGNOSTIC SYSTEM — OBD II

Your vehicle is equipped with a sophisticated onboard diagnostic system called OBD II. This system monitors the performance of the emissions, engine, and automatic transmission control systems. When these systems are operating properly, your vehicle will provide excellent performance and fuel economy, as well as engine emissions well within current government regulations.

If any of these systems require service, the OBD II system will turn on the "Malfunction Indicator Light (MIL)." It will also store diagnostic codes and other information to assist your service technician in making repairs. Although your vehicle will usually be drivable and not need towing, see your authorized dealer for service as soon as possible.

CAUTION!

- **Prolonged driving with the MIL on could cause further damage to the emission control system. It could also affect fuel economy and driveability. The vehicle must be serviced before any emissions tests can be performed.**
- **If the MIL is flashing while the engine is running, severe catalytic converter damage and power loss will soon occur. Immediate service is required.**

Loose Fuel Filler Cap Message

If the vehicle diagnostic system determines that the fuel filler cap is loose, improperly installed, or damaged, a "gASCAP" message will display in the odometer or a "CHECK GASCAP" message will be displayed in the Electronic Vehicle Information Center (EVIC). Refer to

"Electronic Vehicle Information Center (EVIC)" in "Understanding Your Instrument Panel" for further information. Tighten the gas cap until a "clicking" sound is heard. This is an indication that the gas cap is properly tightened.

Press the odometer reset button to turn the message off. If the problem persists, the message will appear the next time the vehicle is started. This might indicate a damaged cap. If the problem is detected twice in a row, the system will turn on the MIL. Resolving the problem will turn the MIL light off.

EMISSIONS INSPECTION AND MAINTENANCE PROGRAMS

In some localities, it may be a legal requirement to pass an inspection of your vehicle's emissions control system. Failure to pass could prevent vehicle registration.

For states that require an Inspection and Maintenance (I/M), this check verifies the "Malfunction Indicator Light (MIL)" is functioning and is not on when the engine is running, and that the OBD II system is ready for testing.

Normally, the OBD II system will be ready. The OBD II system may **not** be ready if your vehicle was recently serviced, recently had a dead battery or a battery replacement. If the OBD II system should be determined not ready for the I/M test, your vehicle may fail the test.

Your vehicle has a simple ignition key-actuated test, which you can use prior to going to the test station. To check if your vehicle's OBD II system is ready, you must do the following:

1. Turn the ignition switch to the ON position, but do not crank or start the engine.

2. If you crank or start the engine, you will have to start this test over.

3. As soon as you turn the ignition switch to the ON position, you will see the MIL symbol come on as part of a normal bulb check.

4. Approximately 15 seconds later, one of two things will happen:

a. The MIL will flash for about 10 seconds and then return to being fully illuminated until you turn OFF the ignition or start the engine. This means that your vehicle's OBD II system is **not ready** and you should **not** proceed to the I/M station.

b. The MIL will not flash at all and will remain fully illuminated until you turn OFF the ignition or start the engine. This means that your vehicle's OBD II system is **ready** and you can proceed to the I/M station.

If your OBD II system is **not ready,** you should see your authorized dealer or repair facility. If your vehicle was recently serviced or had a battery failure or replacement, you may need to do nothing more than drive your vehicle as you normally would in order for your OBD II system to update. A recheck with the above test routine may then indicate that the system is now ready.

Regardless of whether your vehicle's OBD II system is ready or not, if the MIL is illuminated during normal vehicle operation you should have your vehicle serviced before going to the I/M station. The I/M station can fail your vehicle because the MIL is on with the engine running.

REPLACEMENT PARTS

Use of genuine MOPAR® parts for normal/scheduled maintenance and repairs is highly recommended to ensure the designed performance. Damage or failures caused by the use of non-MOPAR® parts for maintenance and repairs will not be covered by the manufacturer's warranty.

DEALER SERVICE

Your authorized dealer has the qualified service personnel, special tools, and equipment to perform all service operations in an expert manner. Service Manuals are available which include detailed service information for your vehicle. Refer to these Service Manuals before attempting any procedure yourself.

NOTE: Intentional tampering with emissions control systems may void your warranty and could result in civil penalties being assessed against you.

WARNING!

You can be badly injured working on or around a motor vehicle. Only do service work for which you have the knowledge and the proper equipment. If you have any doubt about your ability to perform a service job, take your vehicle to a competent mechanic.

MAINTENANCE PROCEDURES

The pages that follow contain the **required** maintenance services determined by the engineers who designed your vehicle.

Besides those maintenance items specified in the fixed maintenance schedule, there are other components which may require servicing or replacement in the future.

CAUTION!

- **Failure to properly maintain your vehicle or perform repairs and service when necessary could result in more costly repairs, damage to other components or negatively impact vehicle performance. Immediately have potential malfunctions examined by an authorized Chrysler Group LLC dealership or qualified repair center.**
- **Your vehicle has been built with improved fluids that protect the performance and durability of your vehicle and also allow extended maintenance intervals. Do not use chemical flushes in these components as the chemicals can damage your engine, transmission, power steering or air conditioning. Such damage is not covered by the New Vehicle Limited Warranty. If a flush is needed because of component malfunction, use only the specified fluid for the flushing procedure.**

Engine Oil

Checking Oil Level

To assure proper engine lubrication, the engine oil must be maintained at the correct level. Check the oil level at regular intervals, such as every fuel stop. The best time to check the engine oil level is about five minutes after a fully warmed engine is shut OFF or before starting the engine after it has sat overnight.

Checking the oil while the vehicle is on level ground will improve the accuracy of the oil level readings. Maintain the oil level between the MIN and MAX markings on the dipstick. Adding one quart of oil when the reading is at the MIN mark will result in a MAX reading on these engines.

CAUTION!

Overfilling or underfilling will cause oil aeration, or loss of oil pressure. This could damage your engine.

Change Engine Oil

The oil change indicator system will remind you that it is time to take your vehicle in for scheduled maintenance. Refer to "Maintenance Schedule" for further information.

NOTE: Under no circumstances should oil change intervals exceed 6,000 miles (10 000 km) or six months, whichever occurs first.

Engine Oil Selection

For best performance and maximum protection under all types of operating conditions, the manufacturer only recommends engine oils that are API certified and meet the requirements of Chrysler Material Standard MS-6395.

American Petroleum Institute (API) Engine Oil Identification Symbol

This symbol means that the oil has been certified by the American Petroleum Institute (API). The manufacturer only recommends API Certified engine oils.

CAUTION!

Do not use chemical flushes in your engine oil as the chemicals can damage your engine. Such damage is not covered by the New Vehicle Limited Warranty.

Engine Oil Viscosity (SAE Grade) – 3.3L & 3.8L Gasoline Engines

SAE 5W-20 engine oil is recommended for all operating temperatures. This engine oil improves low temperature starting and vehicle fuel economy. Your engine oil filler cap also shows the recommended engine oil viscosity for your vehicle.

For information on engine oil filler cap location, refer to "Engine Compartment" in "Maintaining Your Vehicle" for further information.

Lubricants that do not have both the engine oil certification mark and the correct SAE viscosity grade number, should not be used.

Engine Oil Viscosity (SAE Grade) – 4.0L Gasoline Engines

SAE 10W-30 engine oil is preferred for all operating temperatures. Your engine oil filler cap also shows the recommended engine oil viscosity for your vehicle.

For information on engine oil filler cap location, refer to "Engine Compartment" in "Maintaining Your Vehicle" for further information.

Lubricants that do not have both the engine oil certification mark and the correct SAE viscosity grade number, should not be used.

Synthetic Engine Oils

You may use synthetic engine oils provided the recommended oil quality requirements are met, and the recommended maintenance intervals for oil and filter changes are followed.

Materials Added to Engine Oil

The manufacturer strongly recommends against the addition of any additives (other than leak detection dyes) to the engine oil. Engine oil is an engineered product and its performance may be impaired by supplemental additives.

Disposing of Used Engine Oil and Oil Filters

Care should be taken in disposing of used engine oil and oil filters from your vehicle. Used oil and oil filters, indiscriminately discarded, can present a problem to the environment. Contact your authorized dealer, service station, or governmental agency for advice on how and where used oil and oil filters can be safely discarded in your area.

Engine Oil Filter

The engine oil filter should be replaced with a new filter at every engine oil change.

Engine Oil Filter Selection

The manufacturer's engines have a full-flow type oil filter. Use a filter of this type for replacement. The quality of replacement filters varies considerably. Only high quality filters should be used to assure most efficient service. MOPAR® engine oil filters are a high quality oil filter and are recommended.

Engine Air Cleaner Filter

Refer to "Maintenance Schedule" for the proper maintenance intervals.

WARNING!

The air induction system (air cleaner, hoses, etc.) can provide a measure of protection in the case of engine backfire. Do not remove the air induction system (air cleaner, hoses, etc.) unless such removal is necessary for repair or maintenance. Make sure that no one is near the engine compartment before starting the vehicle with the air induction system (air cleaner, hoses, etc.) removed. Failure to do so can result in serious personal injury.

Engine Air Cleaner Filter Selection

The quality of replacement engine air cleaner filters varies considerably. Only high quality filters should be used to assure most efficient service. MOPAR® engine air cleaner filters are a high quality filter and are recommended.

Exhaust System

The best protection against carbon monoxide entry into the vehicle body is a properly maintained engine exhaust system.

If you notice a change in the sound of the exhaust system; or if the exhaust fumes can be detected inside the vehicle; or when the underside or rear of the vehicle is damaged; have an authorized technician inspect the complete exhaust system and adjacent body areas for broken, damaged, deteriorated, or mispositioned parts. Open seams or loose connections could permit exhaust fumes to seep into the passenger compartment. In addition, inspect the exhaust system each time the vehicle is raised for lubrication or oil change. Replace as required.

WARNING!

- **Exhaust gases can injure or kill. They contain carbon monoxide (CO), which is colorless and odorless. Breathing it can make you unconscious and can eventually poison you. To avoid breathing CO, refer to "Safety Tips/Exhaust Gas" in "Things To Know Before Starting Your Vehicle" for further information.**
- **A hot exhaust system can start a fire if you park over materials that can burn. Such materials might be grass or leaves coming into contact with your exhaust system. Do not park or operate your vehicle in areas where your exhaust system can contact anything that can burn.**

CAUTION!

- **The catalytic converter requires the use of unleaded fuel only. Leaded gasoline will destroy the effectiveness of the catalyst as an emissions control device and may seriously reduce engine performance and cause serious damage to the engine.**
- **Damage to the catalytic converter can result if your vehicle is not kept in proper operating condition. In the event of engine malfunction, particularly involving engine misfire or other apparent loss of performance, have your vehicle serviced promptly. Continued operation of your vehicle with a severe malfunction could cause the converter to overheat, resulting in possible damage to the converter and vehicle.**

Under normal operating conditions, the catalytic converter will not require maintenance. However, it is important to keep the engine properly tuned to assure proper catalyst operation and prevent possible catalyst damage.

NOTE: Intentional tampering with emissions control systems can result in civil penalties being assessed against you.

In unusual situations involving grossly malfunctioning engine operation, a scorching odor may suggest severe and abnormal catalyst overheating. If this occurs, stop the vehicle, turn off the engine and allow it to cool. Service, including a tune-up to manufacturer's specifications, should be obtained immediately.

To minimize the possibility of catalytic converter damage:

- Do not shut off the engine or interrupt the ignition, when the transmission is in gear and the vehicle is in motion.
- Do not try to start the engine by pushing or towing the vehicle.
- Do not idle the engine with any spark plug wires disconnected or removed, such as when diagnostic testing, or for prolonged periods during very rough idle or malfunctioning operating conditions.

Maintenance-Free Battery

Your vehicle is equipped with a maintenance-free battery. You will never have to add water, nor is periodic maintenance required.

WARNING!

- **Battery fluid is a corrosive acid solution and can burn or even blind you. Do not allow battery fluid to contact your eyes, skin, or clothing. Do not lean over a battery when attaching clamps. If acid splashes in eyes or on skin, flush the area immediately with large amounts of water. Refer to "Jump-Starting Procedures" in "What To Do In Emergencies" for further information.**
- **Battery gas is flammable and explosive. Keep flame or sparks away from the battery. Do not use a booster battery or any other booster source with an output greater than 12 Volts. Do not allow cable clamps to touch each other.**
- **Battery posts, terminals, and related accessories contain lead and lead compounds. Wash hands after handling.**

CAUTION!

- **It is essential when replacing the cables on the battery that the positive cable is attached to the positive post and the negative cable is attached to the negative post. Battery posts are marked positive (+) and negative (-) and are identified on the battery case. Cable clamps should be tight on the terminal posts and free of corrosion.**
- **If a "fast charger" is used while the battery is in the vehicle, disconnect both vehicle battery cables before connecting the charger to the battery. Do not use a "fast charger" to provide starting voltage.**

Air Conditioner Maintenance

For best possible performance, your air conditioner should be checked and serviced by an authorized dealer at the start of each warm season. This service should include cleaning of the condenser fins and a system performance check. Drive belt tension should also be checked at this time.

CAUTION!

Do not use chemical flushes in your air conditioning system as the chemicals can damage your air conditioning components. Such damage is not covered by the New Vehicle Limited Warranty.

WARNING!

- **Use only refrigerants and compressor lubricants approved by the manufacturer for your air conditioning system. Some unapproved refrigerants are flammable and can explode, injuring you. Other unapproved refrigerants or lubricants can cause the system to fail, requiring costly repairs. Refer to Warranty Information Book, located on the DVD, for further warranty information.**
- **The air conditioning system contains refrigerant under high pressure. To avoid risk of personal injury or damage to the system, adding refrigerant or any repair requiring lines to be disconnected should be done by an experienced repairman.**

Refrigerant Recovery and Recycling

R-134a air conditioning refrigerant is a hydrofluorocarbon (HFC) that is endorsed by the Environmental Protection Agency and is an ozone-saving product. However, the manufacturer recommends that air conditioning service be performed by an authorized dealer, or other authorized service facility, using recovery and recycling equipment.

NOTE: Use only manufacturer-approved A/C System Sealers, Stop Leak Products, Seal Conditioners, Compressor Oil, or Refrigerants.

A/C Air Filter – If Equipped

Refer to "Maintenance Schedule" for the proper maintenance intervals.

WARNING!

Do not remove the A/C air filter while the blower is operating or personal injury may result.

The A/C air filter is located in the fresh air inlet behind the glove box. Perform the following procedure to replace the filter:

1. Open the glove compartment and remove all contents.

2. Push in on the sides of the glove compartment and lower the door.

3. Pivot the glove compartment downward.

4. Disengage the two retaining tabs that secure the filter cover to the HVAC housing, and remove the cover.

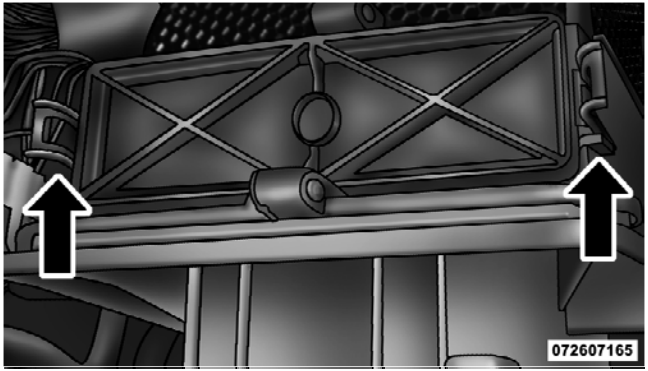

A/C Air Filter Replacement

5. Remove the A/C air filter by pulling it straight out of the housing.

6. Install the A/C air filter with the arrow on the filter pointing toward the floor. When installing the filter cover, make sure the retaining tabs fully engage the cover.

CAUTION!

The A/C air filter is labeled with an arrow to indicate airflow direction through the filter. Failure to properly install the filter will result in the need to replace it more often.

7. Rotate the glove compartment door back into position.

Body Lubrication

Locks and all body pivot points, including such items as seat tracks, door hinge pivot points and rollers, liftgate, tailgate, sliding doors and hood hinges, should be lubricated periodically with a lithium-based grease, such as MOPAR® Spray White Lube or equivalent, to assure quiet, easy operation and to protect against rust and wear. Prior to the application of any lubricant, the parts concerned should be wiped clean to remove dust and grit; after lubricating excess oil and grease should be removed. Particular attention should also be given to hood latching components to ensure proper function. When performing other underhood services, the hood latch, release mechanism and safety catch should be cleaned and lubricated.

The external lock cylinders should be lubricated twice a year, preferably in the Fall and Spring. Apply a small amount of a high quality lubricant such as MOPAR® Lock Cylinder Lubricant or equivalent directly into the lock cylinder.

Windshield Wiper Blades

Clean the rubber edges of the wiper blades and the windshield periodically with a sponge or soft cloth and a mild nonabrasive cleaner. This will remove accumulations of salt or road film.

Operation of the wipers on dry glass for long periods may cause deterioration of the wiper blades. Always use washer fluid when using the wipers to remove salt or dirt from a dry windshield.

Avoid using the wiper blades to remove frost or ice from the windshield. Keep the blade rubber out of contact with petroleum products such as engine oil, gasoline, etc.

NOTE: Life expectancy of wiper blades varies depending on geographical area and frequency of use. Poor performance of blades may be present with chattering, marks, water lines or wet spots. If any condition is present please proceed to clean wiper blades with humid cloth removing any debris that may be affecting its function.

Adding Washer Fluid

The fluid reservoir for the windshield washers and the rear window washer is shared. It is located in the engine compartment and should be checked at regular intervals. Fill the reservoir with windshield washer solvent (not radiator antifreeze) and operate the system for a few seconds to flush out any residual water.

The washer fluid reservoir will hold a full gallon of fluid when the Low Washer Fluid Light illuminates.

WARNING!

Commercially available windshield washer solvents are flammable. They could ignite and burn you. Care must be exercised when filling or working around the washer solution.

After the engine has warmed, operate the defroster for a few minutes to reduce the possibility of smearing or freezing the fluid on the cold windshield. MOPAR® All Weather Windshield Washer Solution or equivalent, used with water as directed on the container, aids cleaning action, reduces the freezing point to avoid line clogging, and is not harmful to paint or trim.

Cooling System

WARNING!

- **When working near the radiator cooling fan, disconnect the fan motor lead or turn the ignition switch to the OFF position. The fan is temperature controlled and can start at anytime the ignition switch is in the ON position.**
- **You or others can be badly burned by hot engine coolant (antifreeze) or steam from your radiator. If you see or hear steam coming from under the hood, do not open the hood until the radiator has had time to cool. Never try to open a cooling system pressure cap when the radiator is hot.**

Coolant Checks

Check the engine coolant (antifreeze) protection every 12 months (before the onset of freezing weather, where applicable). If the engine coolant (antifreeze) is dirty or rusty in appearance, the system should be drained, flushed and refilled with fresh coolant. Check the front of the A/C condenser for any accumulation of bugs, leaves, etc. If dirty, clean by gently spraying water from a garden hose vertically down the face of the condenser.

Check the coolant recovery bottle tubing for brittle rubber, cracking, tears, cuts and tightness of the connection at the bottle and radiator. Inspect the entire system for leaks.

With the engine at normal operating temperature (but not running), check the cooling system pressure cap for proper vacuum sealing by draining a small amount of engine coolant (antifreeze) from the radiator drain cock. If the cap is sealing properly, the engine coolant (antifreeze) will begin to drain from the coolant recovery bottle. DO NOT REMOVE THE COOLANT PRESSURE CAP WHEN THE COOLING SYSTEM IS HOT.

Cooling System – Drain, Flush and Refill

If the engine coolant (antifreeze) is dirty or contains a considerable amount of sediment, clean and flush with a reliable cooling system cleaner. Follow with a thorough rinsing to remove all deposits and chemicals. Properly dispose of the old engine coolant (antifreeze) solution.

Refer to "Maintenance Schedule" for the proper maintenance intervals.

Selection of Coolant

Use only the manufacturer's recommended engine coolant (antifreeze). Refer "Fluids, Lubricants and Genuine Parts" in "Maintaining Your Vehicle" for further information.

CAUTION!

- **Mixing of engine coolant (antifreeze) other than specified Hybrid Organic Additive Technology (HOAT) engine coolant (antifreeze), may result in engine damage and may decrease corrosion protection. If a non-HOAT engine coolant (antifreeze) is introduced into the cooling system in an emergency, it should be replaced with the specified engine coolant (antifreeze) as soon as possible.**
- **Do not use water alone or alcohol based engine coolant (antifreeze) products. Do not use additional rust inhibitors or anti-rust products, as they may not be compatible with the radiator engine coolant (antifreeze) and may plug the radiator.**

(Continued)

CAUTION! (Continued)

- **This vehicle has not been designed for use with Propylene Glycol-based engine coolant (antifreeze). Use of Propylene Glycol-based engine coolant (antifreeze) is not recommended.**

Adding Coolant

Your vehicle has been built with an improved engine coolant (antifreeze) that allows extended maintenance intervals. This engine coolant (antifreeze) can be used up to five years or 102,000 miles (170 000 km) before replacement. To prevent reducing this extended maintenance period, it is important that you use the same engine coolant (antifreeze) throughout the life of your vehicle.

Please review these recommendations for using Hybrid Organic Additive Technology (HOAT) engine coolant (antifreeze). When adding engine coolant (antifreeze):

- The manufacturer recommends using MOPAR® Antifreeze/Coolant 5 Year/100,000 Mile Formula HOAT (Hybrid Organic Additive Technology) or equivalent.
- Mix a minimum solution of 50% HOAT engine coolant and distilled water. Use higher concentrations (not to exceed 70%) if temperatures below −34°F (−37°C) are anticipated.
- Use only high purity water such as distilled or deionized water when mixing the water/engine coolant (antifreeze) solution. The use of lower quality water will reduce the amount of corrosion protection in the engine cooling system.

Please note that it is the owner's responsibility to maintain the proper level of protection against freezing according to the temperatures occurring in the area where the vehicle is operated.

NOTE: Mixing engine coolant (antifreeze) types will decrease the life of the engine coolant (antifreeze) and will require more frequent coolant changes.

Cooling System Pressure Cap

The cap must be fully tightened to prevent the loss of engine coolant (antifreeze), and to ensure that engine coolant (antifreeze) will return to the radiator from the coolant recovery bottle.

The cap should be inspected and cleaned if there is any accumulation of foreign material on the sealing surfaces.

WARNING!

- **The warning words "DO NOT OPEN HOT" on the cooling system pressure cap are a safety precaution. Never add engine coolant (antifreeze) when the engine is overheated. Do not loosen or remove the cap to cool an overheated engine. Heat causes pressure to build up in the cooling system. To prevent scalding or injury, do not remove the pressure cap while the system is hot or under pressure.**
- **Do not use a pressure cap other than the one specified for your vehicle. Personal injury or engine damage may result.**

Disposal of Used Coolant

Used ethylene glycol-based engine coolant (antifreeze) is a regulated substance requiring proper disposal. Check with your local authorities to determine the disposal rules for your community. To prevent ingestion by animals or children, do not store ethylene glycol-based engine coolant (antifreeze) in open containers or allow it to remain in puddles on the ground. If ingested by a child or pet, seek emergency assistance immediately. Clean up any ground spills immediately.

Coolant Level

The coolant bottle provides a quick visual method for determining that the coolant level is adequate. With the engine cold, the level of the engine coolant (antifreeze) in the coolant recovery bottle should be between the ranges indicated on the bottle.

The radiator normally remains completely full, so there is no need to remove the radiator cap unless checking for engine coolant (antifreeze) freeze point or replacing the engine coolant (antifreeze). Advise your service attendant of this. As long as the engine operating temperature is satisfactory, the coolant bottle only needs to be checked once a month.

When additional engine coolant (antifreeze) is needed to maintain the proper level, it should be added to the coolant bottle. Do not overfill.

Points to Remember

NOTE: When the vehicle is stopped after a few miles (a few kilometers) of operation, you may observe vapor coming from the front of the engine compartment. This is normally a result of moisture from rain, snow, or high humidity accumulating on the radiator and being vaporized when the thermostat opens, allowing hot engine coolant (antifreeze) to enter the radiator.

If an examination of your engine compartment shows no evidence of radiator or hose leaks, the vehicle may be safely driven. The vapor will soon dissipate.

- Do not overfill the coolant recovery bottle.
- Check the engine coolant (antifreeze) freeze point in the radiator and in the coolant recovery bottle. If engine coolant (antifreeze) needs to be added, contents of the coolant recovery bottle must also be protected against freezing.
- If frequent engine coolant (antifreeze) additions are required, or if the level in the coolant recovery bottle does not drop when the engine cools, the cooling system should be pressure tested for leaks.
- Maintain engine coolant (antifreeze) concentration at 50% HOAT engine coolant (antifreeze) (minimum) and distilled water for proper corrosion protection of your engine, which contains aluminum components.
- Make sure that the radiator and coolant recovery bottle overflow hoses are not kinked or obstructed.
- Keep the front of the radiator clean. If your vehicle is equipped with air conditioning, also keep the front of the condenser clean.
- Do not change the thermostat for Summer or Winter operation. If replacement is ever necessary, install ONLY the correct type thermostat. Other designs may result in unsatisfactory coolant performance, poor gas mileage, and increased emissions.

Brakes

In order to assure brake system performance, all brake system components should be inspected periodically. Refer to “Maintenance Schedule” for the proper maintenance intervals.

WARNING!

Riding the brakes can lead to brake failure and possibly an accident. Driving with your foot resting or riding on the brake pedal can result in abnormally high brake temperatures, excessive lining wear, and possible brake damage. You would not have your full braking capacity in an emergency.

Master Cylinder – Brake Fluid Level Check

The fluid level in the master cylinder should be checked when performing underhood services, or immediately if the "Brake System Warning Light" indicates system failure.

Clean the top of the master cylinder area before removing the cap. Add fluid to bring the level up to the top of the "FULL" mark on the side of the master cylinder reservoir.

Overfilling of fluid is not recommended because it may cause leaking in the system.

Add enough fluid to bring the level up to the requirements described on the brake fluid reservoir. With disc brakes, fluid level can be expected to fall as the brake pads wear. However, low fluid level may be caused by a leak and a checkup may be needed.

Use only manufacturer's recommended brake fluid. Refer to "Fluids, Lubricants, and Genuine Parts" in "Maintaining Your Vehicle" for further information.

WARNING!

- **Use only manufacturer's recommended brake fluid. Refer to "Fluids, Lubricants, and Genuine Parts" in "Maintaining Your Vehicle" for further information. Using the wrong type of brake fluid can severely damage your brake system and/or impair its performance. The proper type of brake fluid for your vehicle is also labeled on the original factory installed hydraulic master cylinder reservoir.**

(Continued)

WARNING! (Continued)

- **To avoid contamination from foreign matter or moisture, use only new brake fluid or fluid that has been in a tightly closed container. Keep the master cylinder reservoir cap secured at all times. Brake fluid in a open container absorbs moisture from the air resulting in a lower boiling point. This may cause it to boil unexpectedly during hard or prolonged braking, resulting in sudden brake failure. This could result in a accident.**
- **Overfilling the brake fluid reservoir can result in spilling brake fluid on hot engine parts, causing the brake fluid to catch fire. Brake fluid can also damage painted and vinyl surfaces, care should be taken to avoid its contact with these surfaces.**

(Continued)

WARNING! (Continued)

- **Do not allow petroleum based fluid to contaminate the brake fluid. Brake seal components could be damaged, causing partial or complete brake failure. This could result in an accident.**

Automatic Transmission

The automatic transmission and differential assembly are contained within a single housing.

The fluid level in the automatic transmission should be checked whenever the vehicle is serviced. Operation with an improper fluid level will greatly reduce the life of the transmission and the fluid.

All four–speed transmissions are equipped with a conventional filler tube and dipstick. If fluid is added, it should be added through the filler tube.

All six–speed transmissions are equipped with a capped dipstick tube. It is sealed and should not be tampered with. Your authorized dealer has the necessary tools to ensure that the fluid level is set properly.

Selection of Lubricant

It is important that the proper lubricant is used in the transmission to assure optimum transmission performance. Use only the manufacturer's recommended transmission fluid. Refer to "Fluids, Lubricants, and Genuine Parts" in "Maintaining Your Vehicle" for further information. It is important that the transmission fluid be maintained at the prescribed level using the recommended fluid. No chemical flushes should be used in any transmission; only the approved lubricant may be used.

CAUTION!

Using a transmission fluid other than the manufacturer's recommended fluid may cause deterioration in transmission shift quality and/or torque converter shudder. Using a transmission fluid other than the manufacturer's recommended fluid will result in more frequent fluid and filter changes. Refer to "Fluids, Lubricants, and Genuine Parts" in "Maintaining Your Vehicle" for further information.

Fluid Level Check (3.3L Engine with Four-Speed Automatic Transmission) – If Equipped

The dipstick is located just behind the radiator on the lower right side.

To properly check the automatic transmission fluid level, the following procedure must be used:

1. The vehicle must be on level ground.

2. The engine should be running at curb idle speed for a minimum of 60 seconds.

3. Fully apply the parking brake.

4. Place the shift lever momentarily into each gear position, ending with the shift lever in PARK. Wipe the area around the dipstick clean to eliminate the possibility of dirt entering the transmission.

5. Remove the dipstick and determine if the fluid is hot or warm. Hot fluid is approximately 180°F (82°C), which is the normal operating temperature after the vehicle has been driven at least 15 miles (24 km). The fluid cannot be comfortably held between the fingertips. Cold is when the fluid is below 80°F (27°C).

6. Wipe the dipstick clean and reinsert until seated. Remove the dipstick and note reading.

a. If the fluid is hot, the reading should be in the crosshatched area marked "HOT" (between the upper two holes in the dipstick).

b. If the fluid is cold, the fluid level should be between the lower two holes in the area marked "COLD".

If the fluid level indicates that it is low, add sufficient fluid to bring it to the proper level.

CAUTION!

Do not overfill. Dirt and water in the transmission can cause serious damage. To prevent dirt and water from entering the transmission after checking or replenishing fluid, make certain that the dipstick cap is reseated properly.

Fluid Level Check (3.8L and 4.0L Engines with Six-Speed Automatic Transmission) – If Equipped

The six-speed automatic transmission is a sealed unit and has no dipstick. See your authorized dealer to have the transmission fluid checked or serviced.

Fluid and Filter Changes

Refer to "Maintenance Schedule" for the proper maintenance intervals.

If the transmission is disassembled for any reason, the fluid and filter should be changed.

Special Additives

Automatic Transmission Fluid (ATF) is an engineered product and its performance may be impaired by supplemental additives. Therefore, do not add any fluid additives to the transmission. The only exception to this policy is the use of special dyes to aid in detecting fluid leaks. In addition, avoid using transmission sealers as they may adversely affect seals.

CAUTION!

Do not use chemical flushes in your transmission as the chemicals can damage your transmission components. Such damage is not covered by the New Vehicle Limited Warranty.

Appearance Care and Protection from Corrosion

Protection of Body and Paint from Corrosion

Vehicle body care requirements vary according to geographic locations and usage. Chemicals that make roads passable in snow and ice, and those that are sprayed on trees and road surfaces during other seasons, are highly corrosive to the metal in your vehicle. Outside parking, which exposes your vehicle to airborne contaminants, road surfaces on which the vehicle is operated, extreme hot or cold weather and other extreme conditions will have an adverse effect on paint, metal trim, and underbody protection.

The following maintenance recommendations will enable you to obtain maximum benefit from the corrosion resistance built into your vehicle.

What Causes Corrosion?

Corrosion is the result of deterioration or removal of paint and protective coatings from your vehicle.

The most common causes are:

- Road salt, dirt and moisture accumulation
- Stone and gravel impact
- Insects, tree sap and tar
- Salt in the air near seacoast localities
- Atmospheric fallout/industrial pollutants

Washing

- Wash your vehicle regularly. Always wash your vehicle in the shade using MOPAR® Car Wash or equivalent, or a mild car wash soap, and rinse the panels completely with clear water.
- If insects, tar or other similar deposits have accumulated on your vehicle, use MOPAR® Super Kleen Bug and Tar Remover or equivalent to remove.
- Use a high quality cleaner wax, such as MOPAR® Cleaner Wax or equivalent to remove road film, stains and to protect your paint finish. Take care never to scratch the paint.
- Avoid using abrasive compounds and power buffing that may diminish the gloss or thin out the paint finish.

CAUTION!

- **Do not use abrasive or strong cleaning materials such as steel wool or scouring powder, which will scratch metal and painted surfaces.**
- **Use of power washers exceeding 1,200 psi (8 274 kPa) can result in damage or removal of paint and decals.**

Special Care

- If you drive on salted or dusty roads or if you drive near the ocean, hose off the undercarriage at least once a month.
- It is important that the drain holes in the lower edges of the doors and rocker panels be kept clear and open.
- If you detect any stone chips or scratches in the paint, touch them up immediately. The cost of such repairs is considered the responsibility of the owner.

- If your vehicle is damaged due to an accident or similar cause which destroys the paint and protective coating, have your vehicle repaired as soon as possible. The cost of such repairs is considered the responsibility of the owner.
- If you carry special cargo such as chemicals, fertilizers, de-icer salt, etc., be sure that such materials are well packaged and sealed.
- If a lot of driving is done on gravel roads, consider mud or stone shields behind each wheel.
- Use MOPAR® Touch Up Paint or equivalent on scratches as soon as possible. Your authorized dealer has touch up paint to match the color of your vehicle.

Wheel and Wheel Trim Care

All wheels and wheel trim, especially aluminum and chrome-plated wheels, should be cleaned regularly with a mild soap and water to prevent corrosion. To remove heavy soil and/or excessive brake dust, use MOPAR® Wheel Cleaner or equivalent or select a nonabrasive, non-acidic cleaner. Do not use scouring pads, steel wool, a bristle brush, or metal polishes. Only MOPAR® or equivalent is recommended. Do not use oven cleaner. Avoid automatic car washes that use acidic solutions or harsh brushes that may damage the wheels protective finish.

Stain Repel Fabric Cleaning Procedure – If Equipped

Stain Repel seats may be cleaned in the following manner:

- Remove as much of the stain as possible by blotting with a clean, dry towel.
- Blot any remaining stain with a clean, damp towel.

- For tough stains, apply MOPAR® Total Clean or equivalent, or a mild soap solution to a clean, damp cloth and remove the stain. Use a fresh, damp towel to remove soap residue.
- For grease stains, apply MOPAR® Multi-Purpose Cleaner or a equivalent high quality cleaner to a clean, damp cloth and remove the stain. Use a fresh, damp towel to remove soap residue.
- Do not use any harsh solvents or any other form of protectants on Stain Repel products.

Interior Care

Instrument Panel Surfaces

The instrument panel cover has a low glare surface, which minimizes reflections in the windshield. Do not use protectants or other products which may cause undesirable reflections. Use soap and warm water to restore the low glare surface.

Cleaning Interior Trim

Interior trim should be cleaned starting with a damp cloth, a damp cloth with MOPAR® Total Clean or equivalent, then MOPAR® Spot & Stain Remover or equivalent if absolutely necessary. Do not use harsh cleaners or Armor All®. Use MOPAR® Total Clean or equivalent to clean vinyl upholstery

Cleaning Leather Upholstery

MOPAR® Total Clean or equivalent is specifically recommended for leather upholstery.

Your leather upholstery can be best preserved by regular cleaning with a damp soft cloth. Small particles of dirt can act as an abrasive and damage the leather upholstery and should be removed promptly with a damp cloth. Stubborn soils can be removed easily with a soft cloth and MOPAR® Total Clean or equivalent. Care should be taken to avoid soaking your leather upholstery with any liquid. Please do not use polishes, oils, cleaning fluids,

solvents, detergents, or ammonia-based cleaners to clean your leather upholstery. Application of a leather conditioner is not required to maintain the original condition.

WARNING!

Do not use volatile solvents for cleaning purposes. Many are potentially flammable, and if used in closed areas they may cause respiratory harm.

Cleaning Headlights

Your vehicle has plastic headlights that are lightweight and less susceptible to stone breakage than glass headlights.

Plastic is not as scratch resistant as glass and therefore different lens cleaning procedures must be followed.

To minimize the possibility of scratching the lenses and reducing light output, avoid wiping with a dry cloth. To remove road dirt, wash with a mild soap solution followed by rinsing.

Do not use abrasive cleaning components, solvents, steel wool or other aggressive material to clean the lenses.

Glass Surfaces

All glass surfaces should be cleaned on a regular basis with MOPAR® Glass Cleaner or equivalent or any commercial household-type glass cleaner. Never use an abrasive type cleaner. Use caution when cleaning the inside rear window equipped with electric defrosters or the right rear quarter window equipped with the radio antenna. Do not use scrapers or other sharp instruments that may scratch the elements.

When cleaning the rearview mirror, spray cleaner on the towel or rag that you are using. Do not spray cleaner directly on the mirror.

Cleaning Plastic Instrument Cluster Lenses
The lenses in front of the instruments in this vehicle are molded in clear plastic. When cleaning the lenses, care must be taken to avoid scratching the plastic.

1. Clean with a wet soft rag. A mild soap solution may be used, but do not use high alcohol content or abrasive cleaners. If soap is used, wipe clean with a clean damp rag.

2. Dry with a soft tissue.

Seat Belt Maintenance
Do not bleach, dye or clean the seat belts with chemical solvents or abrasive cleaners. This will weaken the fabric. Sun damage can also weaken the fabric.

If the seat belts need cleaning, use a mild soap solution or lukewarm water. Do not remove the belts from the car to wash them.

Replace the seat belts if they appear frayed or worn, or if the buckles do not work properly.

Cleaning the Instrument Panel Cupholders

Removal
Pull the flexible liner from the cupholder drawer starting at one edge to ease removal.

Cleaning
The liner is top shelf dishwasher safe, or you may follow the cleaning procedure below.

Soak the liner in a mixture of medium hot tap water and one teaspoon of mild liquid dish soap. Let soak for approximately 30 minutes. After 30 minutes, pull the liner from the water and dip it back into the water about six times. This will loosen any remaining debris. Rinse the liner thoroughly under warm running water. Shake the excess water from the liner and dry the outer surfaces with a clean soft cloth.

Installation

Place the liner into the cupholder drawer and press the liner into place so that the retention tabs seat into the corresponding openings in the drawer.

FUSES

Totally Integrated Power Module (TIPM)

The Totally Integrated Power Module (TIPM) is located in the engine compartment near the battery. Refer to the applicable "Engine Compartment" illustration in this section. This center contains cartridge fuses and mini-fuses. A label that identifies each component may be printed or embossed on the inside of the cover.

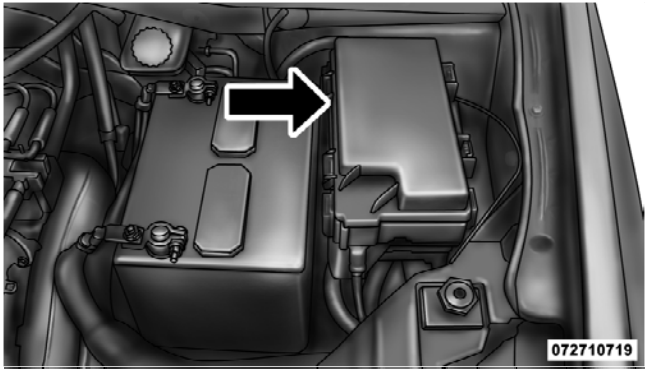

Totally Integrated Power Module (TIPM)

CAUTION!

- **When installing the Totally Integrated Power Module cover, it is important to ensure the cover is properly positioned and fully latched. Failure to do so may allow water to get into the Integrated Power Module, and possibly result in a electrical system failure.**
- **When replacing a blown fuse, it is important to use only a fuse having the correct amperage rating. The use of a fuse with a rating other than indicated may result in a dangerous electrical system overload. If a properly rated fuse continues to blow, it indicates a problem in the circuit that must be corrected.**

The numbers inside the TIPM cover correspond to the following table.

FUSES/TIPM			
Cavity	**Cartridge Fuse**	**Mini-Fuse**	**Description**
J1	40 Amp Green	—	Power Folding Seat
J2	30 Amp Pink	—	Power Liftgate Module
J3	30 Amp Pink	—	Rear Door Module (RR Door Node)
J4	25 Amp Natural	—	Driver Door Node
J5	25 Amp Natural	—	Passenger Door Node
J6	40 Amp Green	—	Antilock Brakes Pump/Stability Control System

FUSES/TIPM			
Cavity	Cartridge Fuse	Mini-Fuse	Description
J7	30 Amp Pink	—	Antilock Brakes Valve/Stability Control System
J8	40 Amp Green	—	Power Memory Seat – If Equipped
J9	40 Amp Green	—	Partial Zero Emissions Vehicle Motor/ Flex Fuel
J10	30 Amp Pink	—	Headlamp Wash Relay/ Manifold Tuning Valve

FUSES/TIPM			
Cavity	Cartridge Fuse	Mini-Fuse	Description
J11	30 Amp Pink	—	Power Sliding Door Module/ Anti–Theft Module Relay Lock Feed
J13	60 Amp Yellow	—	Ignition Off Draw (IOD) – Main
J14	40 Amp Green	—	Rear Window Defogger
J15	30 Amp Pink	—	Rear Blower
J17	40 Amp Green	—	Starter Solenoid
J18	20 Amp Blue	—	Powertrain Control Module Trans Range

FUSES/TIPM			
Cavity	Cartridge Fuse	Mini-Fuse	Description
J19	60 Amp Yellow	—	Radiator Fan
J20	30 Amp Pink	—	Front Wiper LO/HI
J21	20 Amp Blue	—	Front/Rear Washer
J22	25 Amp Natural	—	Sunroof Module
M1	—	15 Amp Blue	Rear Center Brake Lamp/ Brake Switch
M2	—	—	—
M3	—	20 Amp Yellow	Spare Fuse
M4	—	10 Amp Red	Trailer Tow

FUSES/TIPM			
Cavity	Cartridge Fuse	Mini-Fuse	Description
M5	—	25 Amp Natural	Inverter
M6	—	20 Amp Yellow	Power Outlet #1 (ACC), Rain Sensor
M7	—	20 Amp Yellow	Power Outlet #2 (BATT/ACC SELECT)
M8	—	20 Amp Yellow	Front Heated Seat – If Equipped
M9	—	20 Amp Yellow	Rear Heated Seat – If Equipped

FUSES/TIPM			
Cavity	Cartridge Fuse	Mini-Fuse	Description
M10	—	15 Amp Blue	Ignition Off Draw — Video System, Satellite Radio, DVD, Hands-Free Module, Universal Garage Door Opener, Vanity Lamp, Streaming Video Module
M11	—	10 Amp Red	Ignition Off Draw – Climate Control System
M12	—	30 Amp Green	Amplifier (AMP)/Radio

FUSES/TIPM			
Cavity	Cartridge Fuse	Mini-Fuse	Description
M13	—	20 Amp Yellow	Ignition Off Draw— Instrument Cluster, SIREN, Clock Module, Multi-Function Control Switch/ ITM
M14	—	20 Amp Yellow	Spare Fuse

FUSES/TIPM			
Cavity	Cartridge Fuse	Mini-Fuse	Description
M15	—	20 Amp Yellow	Rear View Mirror, Instrument Cluster, Multi-Function Control Switch, Tire Pressure Monitor, Glow Plug Module – Export Diesel Only, Assy-Shifter (Hall Effect), Acoustic Noise Cancellation

FUSES/TIPM			
Cavity	Cartridge Fuse	Mini-Fuse	Description
M16	—	10 Amp Red	Airbag Module/ Occupant Classification Module
M17	—	15 Amp Blue	Left Tail/ License/Park Lamp, Running Lamps
M18	—	15 Amp Blue	Right Tail/ Park/Run Lamp
M19	—	25 Amp Natural	Automatic Shutdown #1 and #2

FUSES/TIPM			
Cavity	Cartridge Fuse	Mini-Fuse	Description
M20	—	15 Amp Blue	Instrument Cluster Interior Light, Switch Bank, Steering Column Module, Switch Steering Wheel
M21	—	20 Amp Yellow	Automatic Shutdown #3
M22	—	10 Amp Red	Right Horn (HI/LOW)
M23	—	10 Amp Red	Left Horn (HI/LOW)
M24	—	25 Amp Natural	Rear Wiper

FUSES/TIPM			
Cavity	Cartridge Fuse	Mini-Fuse	Description
M25	—	20 Amp Yellow	Fuel Pump, Diesel Lift Pump – Export Only
M26	—	10 Amp Red	Power Mirror Switch, Driver Window Switch
M27	—	10 Amp Red	Ignition Switch, Wireless Control Module, Keyless Entry Module, Steering Column Lock

FUSES/TIPM			
Cavity	Cartridge Fuse	Mini-Fuse	Description
M28	—	10 Amp Red	Powertrain Control Module, Transmission Feed, Transmission Control Module
M29	—	10 Amp Red	Occupant Classification Module
M30	—	15 Amp Blue	Rear Wiper Module, Power Folding Mirror, J1962 Diagnostic Feed
M31	—	20 Amp Yellow	Back-Up Lamps

FUSES/TIPM			
Cavity	Cartridge Fuse	Mini-Fuse	Description
M32	—	10 Amp Red	Airbag Module, TT EUROPE
M33	—	10 Amp Red	Powertrain Control Module, Transmission Control Module

FUSES/TIPM			
Cavity	Cartridge Fuse	Mini-Fuse	Description
M34	—	10 Amp Red	Park Assist, Heater Climate Control System Module, Head-lamp Wash, Compass, IR Sensor, Rear Camera, Lamp Door FT Drv/ Pass, Lamp Flashlight, AHLM, Relay Diesel Cabin Heater, Rad Fan Diesel
M35	—	10 Amp Red	Heated Mirrors
M36	—	20 Amp Yel-low	Power Outlet #3

FUSES/TIPM			
Cavity	Cartridge Fuse	Mini-Fuse	Description
M37	—	10 Amp Red	Antilock Brakes, Stability Control System, Stop Lamp Switch, Fuel Pump Rly Hi Control
M38	—	25 Amp Natural	Door Lock/ Unlock Motors, Liftgate Lock/ Unlock Motors

The heated mirrors, lower instrument panel power outlet and removable floor console, when in the front position are fused with self-resetting fuses that are only service-able by an authorized dealer. The power seats are fused by a 30 Amp circuit breaker located under the driver's seat. The power windows are fused by a 25 Amp circuit

breaker located under the instrument panel near the steering column. If you experience temporary or permanent loss of these systems, see your authorized dealer for service.

VEHICLE STORAGE

If you are leaving your vehicle dormant for more than 21 days, you may want to take steps to protect your battery. You may do the following:

- Remove the 20 Amp mini-fuse in the Totally Integrated Power Module (TIPM) labeled Ignition-Off Draw (IOD).
- Or, disconnect the negative cable from the battery.
- Anytime you store your vehicle, or keep it out of service for two weeks or more, run the air conditioning system at idle for about five minutes in the fresh air and high blower setting. This will ensure adequate system lubrication to minimize the possibility of compressor damage when the system is started again.

REPLACEMENT BULBS

LIGHT BULBS – Interior	Bulb Number
Center & Rear Dome Lamp	578
Center & Rear Reading Lamps	578
Front Door Courtesy Lamp	578
Front Header Reading Lamps – If Equipped	578
Instrument Cluster Lamps	PC74
Liftgate Lamp(s)	578
Overhead Console Reading Lamps	PC579
Removable Console Lamp – If Equipped	194
Visor Vanity Lamps	6501966

NOTE: For lighted switches, see your authorized dealer for replacement instructions.

All of the interior bulbs are glass wedge base or glass cartridge types. Aluminum base bulbs are not approved and should not be used for replacement.

LIGHT BULBS – Exterior	Bulb Number
Backup, Tail, Stop Lamp	3157
Center High-Mounted Stop Lamp	LED (See Note 1)
Fog Lamp – If Equipped	PSX24W
Park/Turn Signal	PY27 / 7W or 3757A
Front Side Marker	W5W
Headlamp – (Low and High Beam Halogen)	H11
Headlamp (HID – If Equipped) Low Beam	D1S
License	168

Note 1: The Center High-Mounted Stop Lamp (CHMSL) uses LED lamps that are not serviceable separately. The CHMSL must be replaced as an assembly, see your authorized dealer.

BULB REPLACEMENT

High Intensity Discharge Headlamps (HID) — If Equipped

The headlamps are a type of high voltage discharge tube. High voltage can remain in the circuit even with the headlamp switch off and the key removed. **Because of this, you should not attempt to service a headlamp bulb yourself. If a headlamp bulb fails, take your vehicle to an authorized dealer for service.**

WARNING!

A transient high voltage occurs at the bulb sockets of High Intensity Discharge (HID) headlamps when the headlamp switch is turned ON. It may cause serious electrical shock or electrocution if not serviced properly. See your authorized dealer for service.

NOTE: On vehicles equipped with High Intensity Discharge (HID) headlamps, when the headlamps are turned on, there is a blue hue to the lamps. This diminishes and becomes more white after approximately 10 seconds, as the system charges.

Quad Headlamps

1. Raise the hood to access the high or low beam bulbs at the rear of the headlamp housing.

2. Release the two tabs on the side of the connector and remove the connector from the bulb.

3. Twist the headlamp bulb and pull the bulb from the headlamp housing.

4. Install the new headlamp bulb and twist until locked into the headlamp housing.

CAUTION!

Do not touch the new bulb with your fingers. Oil contamination will severely shorten bulb life. If the bulb comes in contact with an oily surface, clean the bulb with rubbing alcohol.

5. Reconnect the wiring connector to the bulb.

Front Park/Turn Signal Lamp

1. Raise the hood to access the rear of the headlamp housing.

2. Twist the turn signal socket and remove from the headlamp housing, then pull the bulb out.

3. Push the new bulb into the socket and reinstall the socket by twisting until locked into the headlamp housing.

Front Side Marker Lamp

1. Raise the hood to access the rear of the headlamp housing.

NOTE: Access is somewhat limited. You may have to remove the inner fender well or remove the headlamp housing for bulb replacement.

2. Twist the socket and remove from the headlamp housing, then pull the bulb out.

3. Push the new bulb into the socket and reinstall the socket by twisting until locked into the headlamp housing.

Fog Lamp

NOTE: Access to the fog lamp bulb is from the rear of the fascia. On the left rear side of the fascia, remove the push pin and lower the hinged access door on the air dam.

1. From behind the bumper fascia, or the access panel on the air dam, twist the bulb counterclockwise, and remove bulb.

CAUTION!

Do not touch the new bulb with your fingers. Oil contamination will severely shorten bulb life. If the bulb comes in contact with an oily surface, clean the bulb with rubbing alcohol.

2. Disconnect wire harness from the bulb.

3. Reconnect the wiring harness to the new bulb and reinstall the bulb by twisting clockwise.

Rear Tail, Stop, Turn Signal, Side Marker and Backup Lamp

1. Raise the liftgate.

2. Remove the tail lamp assembly by removing the two screws from the inboard side. Use a fiber stick or similar tool to gently pry the light on the outboard side to disengage the two ball studs.

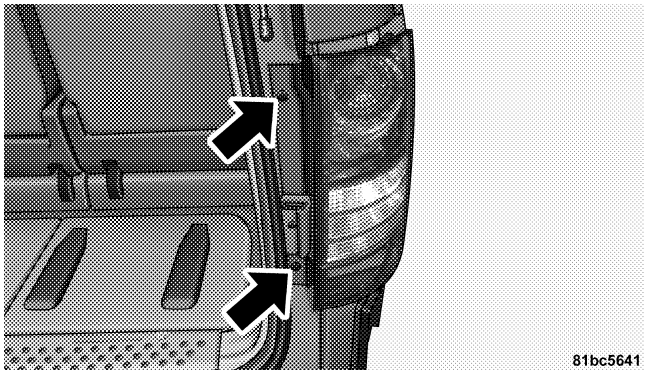

Tail Lamp Housing Fastener Removal

NOTE:

- If a screwdriver is used, make sure a soft material is placed between the vehicle body and tool so not to scratch the paint.
- The PRY location is best closest to the studs while dislodging them separately.

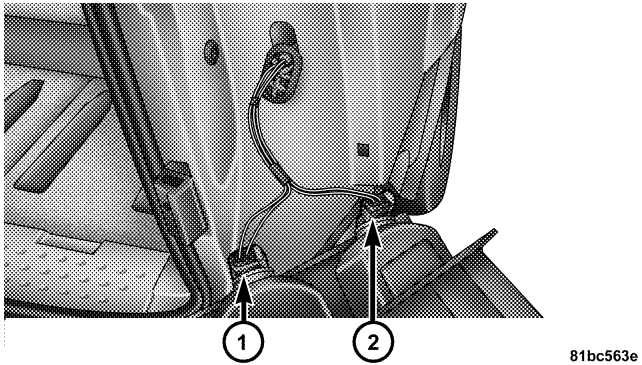

Bulb Location

1 — Stop, Tail, Turn Signal Bulb Combo
2 — Backup Bulb

3. Twist the socket and remove it from the lamp assembly.

4. Pull the bulb to remove it from the socket.

5. Replace the bulb, reinstall the socket, and reattach the lamp assembly.

Center High-Mounted Stop Lamp (CHMSL)

The CHMSL uses LED lamps that are not serviceable separately. The CHMSL must be replaced as an assembly, see your authorized dealer.

License Lamp

The license plate lamp is located under the tailgate light bar and above the license plate.

1. Using a small screwdriver, press inward the locking tab on the outboard side of the lamp assembly and pull down on the lamp assembly for removal.

2. Twist and remove the socket from the lamp assembly and pull the bulb out to remove.

3. Push the bulb into the socket, twist the socket into the lamp assembly and reinstall the lamp assembly into place ensuring the locking tab is secure.

FLUID CAPACITIES

	U.S.	Metric
Fuel (Approximate)	20 Gallons	76 Liters
Engine Oil with Filter		
3.3L and 3.8L Engine (SAE 5W-20, API Certified)	5 Quarts	4.7 Liters
4.0L Engine (SAE 10W-30, API Certified)	5.5 Quarts	5.2 Liters
Cooling System *		
3.3L, 3.8L, and 4.0L Engine (MOPAR® Engine Coolant/ Antifreeze 5 Year/100,000 Mile Formula or equivalent)	13.4 Quarts	12.6 Liters
* Includes heater and coolant recovery bottle filled to MAX level. Add 2.9 Qts (2.8 L) if equipped with a rear heater.		

FLUIDS, LUBRICANTS AND GENUINE PARTS

Engine

Component	Fluid, Lubricant, or Genuine Part
Engine Coolant	MOPAR® Antifreeze/Coolant Five Year/100,000 Mile Formula HOAT (Hybrid Organic Additive Technology) or equivalent.
Engine Oil – 3.3L and 3.8L Engines	Use API Certified SAE 5W-20 Engine Oil, meeting the requirements of Chrysler Material Standard MS-6395. Refer to your oil filler cap for correct SAE grade.
Engine Oil – 4.0L Engine	Use API Certified SAE 10W-30 Engine Oil, meeting the requirements of Chrysler Material Standard MS-6395. Refer to your oil filler cap for correct SAE grade.
Engine Oil Filter	MOPAR® Engine Oil Filter or equivalent.
Spark Plugs – 3.3L and 3.8L Engines	RE14PLP5 (Gap 0.050 in [1.27 mm])
Spark Plugs – 4.0L Engine	ZFR5LP-13G (Gap 0.050 in [1.27 mm])
Fuel Selection – 3.3L and 3.8L Engines	87 Octane
Fuel Selection – 4.0L Engine	87 Octane Acceptable — 89 Recommended

Chassis

Component	Fluid, Lubricant, or Genuine Part
Automatic Transmission	MOPAR® ATF+4® Automatic Transmission Fluid or equivalent licensed ATF+4® product.
Brake Master Cylinder	MOPAR® DOT 3 and SAE J1703 should be used or equivalent. If DOT 3 brake fluid is not available, then DOT 4 is acceptable. Use only recommended brake fluids.
Power Steering Reservoir	MOPAR® Power Steering Fluid +4, MOPAR® ATF+4® Automatic Transmission Fluid or equivalent licensed ATF+4® product.

MAINTENANCE SCHEDULES

CONTENTS

■ Emissions Control System Maintenance 490

■ Maintenance Schedule 490

□ Required Maintenance Intervals 492

EMISSIONS CONTROL SYSTEM MAINTENANCE

The Scheduled Maintenance services listed in **bold type** must be done at the times or mileages specified to ensure the continued proper functioning of the emissions control system. These and all other maintenance services included in this manual, should be done to provide best vehicle performance and reliability. More frequent maintenance may be needed for vehicles in severe operating conditions, such as dusty areas and very short trip driving.

Inspection and service should also be done anytime a malfunction is suspected.

NOTE: Maintenance, replacement or repair of the emissions control devices and systems on your vehicle may be performed by any automotive repair establishment or individual using any automotive part that has been certified pursuant to U.S. EPA or in the State of California, California Air Resources Board regulations.

MAINTENANCE SCHEDULE

The oil change indicator system will remind you that it is time to take your vehicle in for scheduled maintenance.

On Non-EVIC equipped vehicles, **CHAngE OIL** will flash in the instrument cluster odometer and a single chime will sound, indicating that an oil change is necessary.

On Electronic Vehicle Information Center (EVIC) equipped vehicles, **Oil Change Required** will be displayed in the EVIC and a single chime will sound, indicating that an oil change is necessary.

Based on engine operation conditions, the oil change indicator message will illuminate. This means that service is required for your vehicle. Have your vehicle serviced as soon as possible, within the next 500 miles (805 km).

NOTE:

- The oil change indicator message will not monitor the time since the last oil change. Change your vehicle's oil if it has been six months since your last oil change, even if the oil change indicator message is NOT illuminated.
- Change your engine oil more often if you drive your vehicle off-road for an extended period of time.
- Under no circumstances should oil change intervals exceed 6,000 miles (10 000 km) or six months, whichever comes first.

Your authorized dealer will reset the oil change indicator message after completing the scheduled oil change. If a scheduled oil change is performed by someone other than your authorized dealer, the message can be reset by referring to the steps described under "Electronic Vehicle Information Center (EVIC)/Oil Change Required" in "Understanding Your Instrument Panel" or under "Instrument Cluster Description/Odometer/Trip Odometer" in "Understanding Your Instrument Panel" for further information.

At Each Stop For Fuel

- Check the engine oil level about five minutes after a fully warmed engine is shut OFF. Checking the oil level while the vehicle is on level ground will improve the accuracy of the oil level reading. Add oil only when the level is at or below the ADD, SAFE or MIN mark.
- Check the windshield washer solvent and add if required.

Once A Month

- Check tire pressure and look for unusual wear or damage.

- Inspect the battery and clean and tighten the terminals as required.
- Check the fluid levels of the coolant reservoir, the brake master cylinder, the power steering and the transmission and add as needed.
- Check all lights and other electrical items for correct operation.

At Each Oil Change

- Change the engine oil filter.
- Inspect the brake hoses and lines.

CAUTION!

Failure to perform the required maintenance items may result in damage to the vehicle.

Required Maintenance Intervals

Refer to the Maintenance Schedules on the following pages for the required maintenance intervals.

6,000 Miles (10,000 km) or 6 Months Maintenance Service Schedule

- ❏ Change the engine oil and engine oil filter.
- ❏ Rotate tires.

Odometer Reading Date

Repair Order # Dealer Code

Signature, Authorized Service Center

12,000 Miles (20,000 km) or 12 Months Maintenance Service Schedule

- ❏ Change the engine oil and engine oil filter.
- ❏ Rotate tires.
- ❏ If using your vehicle for any of the following: Dusty or off-road conditions. Inspect the engine air cleaner filter, replace if necessary.
- ❏ Replace the air conditioning filter.
- ❏ Inspect the brake linings, replace if necessary.
- ❏ Inspect the CV Joints. Perform the first inspection at 12,000 miles (20 000 km) or 12 months.
- ❏ Inspect the exhaust system. Perform the first inspection at 12,000 miles (20 000 km) or 12 months.
- ❏ Inspect the front suspension, tie rod ends and boot seals for cracks or leaks and all parts for damage, wear, improper looseness or end play; replace if necessary.

Odometer Reading Date

Repair Order # Dealer Code

Signature, Authorized Service Center

18,000 Miles (30,000 km) or 18 Months Maintenance Service Schedule

- ❏ Change the engine oil and engine oil filter.
- ❏ Rotate tires.

Odometer Reading Date

Repair Order # Dealer Code

Signature, Authorized Service Center

24,000 Miles (40,000 km) or 24 Months Maintenance Service Schedule

- ❏ Change the engine oil and engine oil filter.
- ❏ Rotate tires.
- ❏ If using your vehicle for any of the following: Dusty or off-road conditions. Inspect the engine air cleaner filter, replace if necessary.
- ❏ Replace the air conditioning filter.
- ❏ Inspect the brake linings, replace if necessary.
- ❏ Inspect the CV Joints.
- ❏ Inspect the exhaust system.
- ❏ Inspect the front suspension, tie rod ends and boot seals for cracks or leaks and all parts for damage, wear, improper looseness or end play; replace if necessary.

Odometer Reading Date

Repair Order # Dealer Code

Signature, Authorized Service Center

30,000 Miles (50,000 km) or 30 Months Maintenance Service Schedule

- ❏ Change the engine oil and engine oil filter.
- ❏ Rotate tires.
- ❏ Replace the engine air cleaner filter.

Odometer Reading Date

Repair Order # Dealer Code

Signature, Authorized Service Center

36,000 Miles (60,000 km) or 36 Months Maintenance Service Schedule

- ❏ Change the engine oil and engine oil filter.
- ❏ Rotate tires.
- ❏ If using your vehicle for any of the following: Dusty or off-road conditions. Inspect the engine air cleaner filter, replace if necessary.
- ❏ Replace the air conditioning filter.
- ❏ Inspect the brake linings, replace if necessary.
- ❏ Inspect the front suspension, tie rod ends and boot seals for cracks or leaks and all parts for damage, wear, improper looseness or end play; replace if necessary.

Odometer Reading Date

Repair Order # Dealer Code

Signature, Authorized Service Center

42,000 Miles (70,000 km) or 42 Months Maintenance Service Schedule

- ❏ Change the engine oil and engine oil filter.
- ❏ Rotate tires.

Odometer Reading Date

Repair Order # Dealer Code

Signature, Authorized Service Center

48,000 Miles (80,000 km) or 48 Months Maintenance Service Schedule

- ❏ Change the engine oil and engine oil filter.
- ❏ Rotate tires.
- ❏ If using your vehicle for any of the following: Dusty or off-road conditions. Inspect the engine air cleaner filter, replace if necessary.
- ❏ Replace the air conditioning filter.
- ❏ Inspect the brake linings, replace if necessary.
- ❏ Inspect the CV Joints.
- ❏ Inspect the exhaust system.
- ❏ Inspect the front suspension, tie rod ends and boot seals for cracks or leaks and all parts for damage, wear, improper looseness or end play; replace if necessary.

Odometer Reading Date

Repair Order # Dealer Code

Signature, Authorized Service Center

54,000 Miles (90,000 km) or 54 Months Maintenance Service Schedule

- ❏ Change the engine oil and engine oil filter.
- ❏ Rotate tires.

Odometer Reading Date

Repair Order # Dealer Code

Signature, Authorized Service Center

60,000 Miles (100,000 km) or 60 Months Maintenance Service Schedule

- ❏ Change the engine oil and engine oil filter.
- ❏ Rotate tires.
- ❏ Replace the engine air cleaner filter.
- ❏ Replace the air conditioning filter.
- ❏ Inspect the brake linings, replace if necessary.
- ❏ Change the automatic transmission fluid & filter if using your vehicle for any of the following: police, taxi, fleet or frequent trailer towing.
- ❏ Flush and replace the engine coolant at 60 months if not done at 102,000 miles (170 000 km).
- ❏ Inspect the front suspension, tie rod ends and boot seals for cracks or leaks and all parts for damage, wear, improper looseness or end play; replace if necessary.

Odometer Reading Date

Repair Order # Dealer Code

Signature, Authorized Service Center

66,000 Miles (110,000 km) or 66 Months Maintenance Service Schedule

- ❏ Change the engine oil and engine oil filter.
- ❏ Rotate tires.

Odometer Reading Date

Repair Order # Dealer Code

Signature, Authorized Service Center

72,000 Miles (120,000 km) or 72 Months Maintenance Service Schedule

- ❏ Change the engine oil and engine oil filter.
- ❏ Rotate tires.
- ❏ If using your vehicle for any of the following: Dusty or off-road conditions. Inspect the engine air cleaner filter, replace if necessary.
- ❏ Replace the air conditioning filter.
- ❏ Inspect the brake linings, replace if necessary.
- ❏ Inspect the CV Joints.
- ❏ Inspect the exhaust system.
- ❏ Inspect the front suspension, tie rod ends and boot seals for cracks or leaks and all parts for damage, wear, improper looseness or end play; replace if necessary.

Odometer Reading Date

Repair Order # Dealer Code

Signature, Authorized Service Center

78,000 Miles (130,000 km) or 78 Months Maintenance Service Schedule

- ❏ Change the engine oil and engine oil filter.
- ❏ Rotate tires.

Odometer Reading Date

Repair Order # Dealer Code

Signature, Authorized Service Center

84,000 Miles (140,000 km) or 84 Months Maintenance Service Schedule

- ❏ Change the engine oil and engine oil filter.
- ❏ Rotate tires.
- ❏ If using your vehicle for any of the following: Dusty or off-road conditions. Inspect the engine air cleaner filter, replace if necessary.
- ❏ Replace the air conditioning filter.
- ❏ Inspect the brake linings, replace if necessary.
- ❏ Inspect the front suspension, tie rod ends and boot seals for cracks or leaks and all parts for damage, wear, improper looseness or end play; replace if necessary.

Odometer Reading Date

Repair Order # Dealer Code

Signature, Authorized Service Center

90,000 Miles (150,000 km) or 90 Months Maintenance Service Schedule

- ❏ Change the engine oil and engine oil filter.
- ❏ Rotate tires.
- ❏ Replace the engine air cleaner filter.
- ❏ **Inspect and replace the PCV Valve if necessary.†**

Odometer Reading Date

Repair Order # Dealer Code

Signature, Authorized Service Center

96,000 Miles (160,000 km) or 96 Months Maintenance Service Schedule

- ❏ Change the engine oil and engine oil filter.
- ❏ Rotate tires.
- ❏ If using your vehicle for any of the following: Dusty or off-road conditions. Inspect the engine air cleaner filter, replace if necessary.
- ❏ Replace the air conditioning filter.
- ❏ Inspect the brake linings, replace if necessary.
- ❏ Inspect the CV Joints.
- ❏ Inspect the exhaust system.
- ❏ Inspect the front suspension, tie rod ends and boot seals for cracks or leaks and all parts for damage, wear, improper looseness or end play; replace if necessary.

Odometer Reading Date

Repair Order # Dealer Code

Signature, Authorized Service Center

102,000 Miles (170,000 km) or 102 Months Maintenance Service Schedule

- ❑ Change the engine oil and engine oil filter.
- ❑ Rotate tires.
- ❑ **Replace the ignition cables (3.3L and 3.8L engines).**
- ❑ **Replace the spark plugs (3.3L, 3.8L, and 4.0L engines).**
- ❑ Replace the timing belt (4.0L engine).
- ❑ Flush and replace the engine coolant if not done at 60 months.

Odometer Reading Date

Repair Order # Dealer Code

Signature, Authorized Service Center

108,000 Miles (180,000 km) or 108 Months Maintenance Service Schedule

- ❑ Change the engine oil and engine oil filter.
- ❑ Rotate tires.
- ❑ If using your vehicle for any of the following: Dusty or off-road conditions. Inspect the engine air cleaner filter, replace if necessary.
- ❑ Replace the air conditioning filter.
- ❑ Inspect the brake linings, replace if necessary.
- ❑ Inspect the front suspension, tie rod ends and boot seals for cracks or leaks and all parts for damage, wear, improper looseness or end play; replace if necessary.

Odometer Reading Date

Repair Order # Dealer Code

Signature, Authorized Service Center

114,000 Miles (190,000 km) or 114 Months Maintenance Service Schedule

- ❏ Change the engine oil and engine oil filter.
- ❏ Rotate tires.

Odometer Reading Date

Repair Order # Dealer Code

Signature, Authorized Service Center

120,000 Miles (200,000 km) or 120 Months Maintenance Service Schedule

- ❏ Change the engine oil and engine oil filter.
- ❏ Rotate tires.
- ❏ Replace the engine air cleaner filter.
- ❏ Replace the air conditioning filter.
- ❏ Inspect the brake linings, replace if necessary.
- ❏ Inspect the CV Joints.
- ❏ Inspect the exhaust system.
- ❏ Inspect the front suspension, tie rod ends and boot seals for cracks or leaks and all parts for damage, wear, improper looseness or end play; replace if necessary.
- ❏ Replace accessory drive belt(s).
- ❏ Change the automatic transmission fluid & filter.

Odometer Reading Date

Repair Order # Dealer Code

Signature, Authorized Service Center

126,000 Miles (210,000 km) or 126 Months Maintenance Service Schedule

- ❏ Change the engine oil and engine oil filter.
- ❏ Rotate tires.

Odometer Reading Date

Repair Order # Dealer Code

Signature, Authorized Service Center

132,000 Miles (220,000 km) or 132 Months Maintenance Service Schedule

- ❏ Change the engine oil and engine oil filter.
- ❏ Rotate tires.
- ❏ If using your vehicle for any of the following: Dusty or off-road conditions. Inspect the engine air cleaner filter, replace if necessary.
- ❏ Replace the air conditioning filter.
- ❏ Inspect the brake linings, replace if necessary.
- ❏ Inspect the front suspension, tie rod ends and boot seals for cracks or leaks and all parts for damage, wear, improper looseness or end play; replace if necessary.

Odometer Reading Date

Repair Order # Dealer Code

Signature, Authorized Service Center

138,000 Miles (230,000 km) or 138 Months Maintenance Service Schedule

- ❏ Change the engine oil and engine oil filter.
- ❏ Rotate tires.

Odometer Reading Date

Repair Order # Dealer Code

Signature, Authorized Service Center

144,000 Miles (240,000 km) or 144 Months Maintenance Service Schedule

- ❏ Change the engine oil and engine oil filter.
- ❏ Rotate tires.
- ❏ If using your vehicle for any of the following: Dusty or off-road conditions. Inspect the engine air cleaner filter, replace if necessary.
- ❏ Replace the air conditioning filter.
- ❏ Inspect the brake linings, replace if necessary.
- ❏ Inspect the front suspension, tie rod ends and boot seals for cracks or leaks and all parts for damage, wear, improper looseness or end play; replace if necessary.

Odometer Reading Date

Repair Order # Dealer Code

Signature, Authorized Service Center

150,000 Miles (250,000 km) or 150 Months Maintenance Service Schedule

- ❑ Change the engine oil and engine oil filter.
- ❑ Rotate tires.
- ❑ Replace the engine air cleaner filter.

Odometer Reading Date

Repair Order # Dealer Code

Signature, Authorized Service Center

† This maintenance is recommended by the manufacturer, but is not required to maintain emissions warranty.

WARNING!

- **You can be badly injured working on or around a motor vehicle. Do only service work for which you have the knowledge and the right equipment. If you have any doubt about your ability to perform a service job, take your vehicle to a competent mechanic.**
- **Failure to properly inspect and maintain your vehicle could result in a component malfunction and effect vehicle handling and performance. This could cause an accident**

IF YOU NEED CONSUMER ASSISTANCE

CONTENTS

- Suggestions For Obtaining Service For Your Vehicle 509
  - Prepare For The Appointment 509
  - Prepare A List 509
  - Be Reasonable With Requests 509
- If You Need Assistance 509
  - Chrysler Group LLC Customer Center 510
  - Chrysler Canada Inc. Customer Center 510
  - In Mexico Contact 510
  - Customer Assistance For The Hearing Or Speech Impaired (TDD/TTY) 511
  - Service Contract 511
- Warranty Information 512
- MOPAR® Parts 512
- Reporting Safety Defects 512
  - In The 50 United States And Washington, D.C. 512
  - In Canada 513
- Publication Order Forms 513

■ Department Of Transportation Uniform Tire Quality Grades 515
□ Treadwear 515
□ Traction Grades 515
□ Temperature Grades 516

SUGGESTIONS FOR OBTAINING SERVICE FOR YOUR VEHICLE

Prepare For The Appointment

If you're having warranty work done, be sure to have the right papers with you. Take your warranty folder. All work to be performed may not be covered by the warranty. Discuss additional charges with the service manager. Keep a maintenance log of your vehicle's service history. This can often provide a clue to the current problem.

Prepare A List

Make a written list of your vehicle's problems or the specific work you want done. If you've had an accident or work done that is not on your maintenance log, let the service advisor know.

Be Reasonable With Requests

If you list a number of items and you must have your vehicle by the end of the day, discuss the situation with the service advisor and list the items in order of priority. At many authorized dealers, you may obtain a rental vehicle at a minimal daily charge. If you need a rental, it is advisable to make these arrangements when you call for an appointment.

IF YOU NEED ASSISTANCE

The manufacturer and its authorized dealers are vitally interested in your satisfaction. We want you to be happy with our products and services.

Warranty service must be done by an authorized dealer. We strongly recommend that you take the vehicle to an authorized dealer. They know your vehicle the best, and are most concerned that you get prompt and high quality service. The manufacturer's authorized dealers have the facilities, factory-trained technicians, special tools, and the latest information to ensure the vehicle is fixed correctly and in a timely manner.

This is why you should always talk to an authorized dealer's service manager first. Most matters can be resolved with this process.

- If for some reason you are still not satisfied, talk to the general manager or owner of the authorized dealership. They want to know if you need assistance.
- If an authorized dealership is unable to resolve the concern, you may contact the manufacturer's customer center.

Any communication to the manufacturer's customer center should include the following information:

- Owner's name and address
- Owner's telephone number (home and office)
- Authorized dealership name
- Vehicle Identification Number (VIN)
- Vehicle delivery date and mileage

Chrysler Group LLC Customer Center
P.O. Box 21–8004
Auburn Hills, MI 48321–8004
Phone: (800) 247–9753

Chrysler Canada Inc. Customer Center
P.O. Box 1621
Windsor, Ontario N9A 4H6
Phone: (800) 465–2001

In Mexico contact:
Av. Prolongacion Paseo de la Reforma, 1240
Sante Fe C.P. 05109
Mexico, D. F.
In Mexico City: 5081-7568
Outside Mexico City: 1-800-505-1300

Customer Assistance For The Hearing Or Speech Impaired (TDD/TTY)

To assist customers who have hearing difficulties, the manufacturer has installed special TDD (Telecommunication Devices for the Deaf) equipment at its customer center. Any hearing or speech impaired customer, who has access to a TDD or a conventional teletypewriter (TTY) in the United States, can communicate with the manufacturer by dialing 1–800–380–CHRY.

Canadian residents with hearing difficulties that require assistance can use the special needs relay service offered by Bell Canada. For TTY teletypewriter users, dial 711 and for Voice callers, dial 1 800 855-0511 to connect with a Bell Relay Service operator.

Service Contract

You may have purchased a service contract for a vehicle to help protect you from the high cost of unexpected repairs after the manufacturer's New Vehicle Limited Warranty expires. The manufacturer stands behind only the manufacturer's service contracts. If you purchased a manufacturer's service contract, you will receive Plan Provisions and an Owner Identification Card in the mail within three weeks of the vehicle delivery date. If you have any questions about the service contract, call the manufacturer's Service Contract National Customer Hotline at 1-800-521-9922 (Canadian residents, call 1-800-485-2001).

The manufacturer will not stand behind any service contract that is not the manufacturer's service contract. It is not responsible for any service contract other than the manufacturer's service contract. If you purchased a service contract that is not a manufacturer's service contract, and you require service after the manufacturer's New Vehicle Limited Warranty expires, please refer to the contract documents, and contact the person listed in those documents.

We appreciate that you have made a major investment when you purchased the vehicle. An authorized dealer has also made a major investment in facilities, tools, and training to assure that you are absolutely delighted with the ownership experience. You'll be pleased with their sincere efforts to resolve any warranty issues or related concerns.

WARNING!

Engine exhaust, some of its constituents, and certain vehicle components contain, or emit, chemicals known to the State of California to cause cancer and birth defects, or other reproductive harm. In addition, certain fluids contained in vehicles and certain products of component wear contain, or emit, chemicals known to the State of California to cause cancer and birth defects, or other reproductive harm.

WARRANTY INFORMATION

See the Warranty Information Booklet, located on the DVD, for the terms and provisions of Chrysler Group LLC warranties applicable to this vehicle and market.

MOPAR® PARTS

MOPAR® fluids, lubricants, parts, and accessories are available from an authorized dealer. They are recommended for your vehicle in order to help keep the vehicle operating at its best.

REPORTING SAFETY DEFECTS

In the 50 United States and Washington, D.C.

If you believe that your vehicle has a defect that could cause a crash or cause injury or death, you should immediately inform the National Highway Traffic Safety Administration (NHTSA) in addition to notifying the manufacturer.

If NHTSA receives similar complaints, it may open an investigation, and if it finds that a safety defect exists in a group of vehicles, it may order a recall and remedy campaign. However, NHTSA cannot become involved in individual problems between you, your authorized dealer, and the manufacturer.

To contact NHTSA, you may either call the Auto Safety Hotline toll free at 1–888–327–4236 (TTY: 1–800–424–9153), or go to http://www.safercar.gov; or write to: Administrator, NHTSA, 1200 New Jersey Avenue, SE., West Building, Washington, D.C. 20590. You can also obtain other information about motor vehicle safety from http://www.safercar.gov.

In Canada

If you believe that your vehicle has a safety defect, you should contact the Customer Service Department immediately. Canadian customers who wish to report a safety defect to the Canadian government should write to: Transport Canada, Motor Vehicle Defect Investigations and Recalls, 2780 Sheffield Road, Ottawa, Ontario K1B 3V9.

PUBLICATION ORDER FORMS

To order the following manuals, you may use either the website or the phone numbers listed below. Visa, Mastercard, American Express, and Discover orders are accepted. If you prefer mailing your payment, please call for an order form.

NOTE: A street address is required when ordering manuals (no P.O. Boxes).

- *Service Manuals*

  These comprehensive Service Manuals provide the information that students and professional technicians need in diagnosing/troubleshooting, problem solving, maintaining, servicing, and repairing Chrysler Group LLC vehicles. A complete working knowledge of the vehicle, system, and/or components is written in straightforward language with illustrations, diagrams, and charts.

- *Diagnostic Procedure Manuals*

  Diagnostic Procedure Manuals are filled with diagrams, charts and detailed illustrations. These practical manuals make it easy for students and technicians to find and fix problems on computer-controlled vehicle systems and features. They show exactly how to find and correct problems the first time, using step-by-step troubleshooting and drivability procedures, proven diagnostic tests and a complete list of all tools and equipment.

- *Owner's Manuals*

  These Owner's Manuals have been prepared with the assistance of service and engineering specialists to acquaint you with specific Chrysler Group LLC vehicles. Included are starting, operating, emergency and maintenance procedures as well as specifications, capabilities and safety tips.

Call toll free at:

- **1–800–890–4038 (U.S.)**
- **1–800–387–1143 (Canada)**

Or

Visit us on the Worldwide Web at:

- **www.techauthority.com**

DEPARTMENT OF TRANSPORTATION UNIFORM TIRE QUALITY GRADES

The following tire grading categories were established by the National Highway Traffic Safety Administration. The specific grade rating assigned by the tire's manufacturer in each category is shown on the sidewall of the tires on your vehicle.

All passenger car tires must conform to Federal safety requirements in addition to these grades.

Treadwear

The Treadwear grade is a comparative rating, based on the wear rate of the tire when tested under controlled conditions on a specified government test course. For example, a tire graded 150 would wear one and one-half times as well on the government course as a tire graded 100. The relative performance of tires depends upon the actual conditions of their use, however, and may depart significantly from the norm due to variations in driving habits, service practices, and differences in road characteristics and climate.

Traction Grades

The Traction grades, from highest to lowest, are AA, A, B, and C. These grades represent the tire's ability to stop on wet pavement, as measured under controlled conditions on specified government test surfaces of asphalt and concrete. A tire marked C may have poor traction performance.

WARNING!

The traction grade assigned to this tire is based on straight-ahead braking traction tests, and does not include acceleration, cornering, hydroplaning, or peak traction characteristics.

Temperature Grades

The temperature grades are A (the highest), B, and C, representing the tire's resistance to the generation of heat and its ability to dissipate heat, when tested under controlled conditions on a specified indoor laboratory test wheel. Sustained high temperature can cause the material of the tire to degenerate and reduce tire life, and excessive temperature can lead to sudden tire failure. The grade C corresponds to a level of performance, which all passenger car tires must meet under the Federal Motor Vehicle Safety Standard No. 109. Grades B and A represent higher levels of performance on the laboratory test wheel, than the minimum required by law.

WARNING!

The temperature grade for this tire is established for a tire that is properly inflated and not overloaded. Excessive speed, under-inflation, or excessive loading, either separately or in combination, can cause heat buildup and possible tire failure.

INDEX

Adding Engine Coolant (Antifreeze) 455
Adding Fuel 387
Adding Washer Fluid 452
Additives, Fuel 381
Adjustable Pedals 172
Air Cleaner, Engine (Engine Air Cleaner Filter) . . . 444
Air Conditioner Maintenance 448
Air Conditioning 303
Air Conditioning Controls 303
Air Conditioning Filter 322,449
Air Conditioning, Operating Tips 322
Air Conditioning, Rear Zone 309,317
Air Conditioning Refrigerant 448
Air Conditioning System 303,312,448
Air Conditioning System, Zone Control 307
Air Pressure, Tires 362
Airbag 68,78
Airbag Deployment 79
Airbag Light 76,81,102,241
Airbag Maintenance 80
Airbag, Side 71,75,77,78
Airbag, Window (Side Curtain) 72,75,78
Alarm Light 239
Alarm (Security Alarm) 16
Alterations/Modifications, Vehicle 7
Antenna, Satellite Radio 295
Antifreeze (Engine Coolant) 454,485
  Disposal 457
Anti-Lock Warning Light 239
Anti-Theft System 16
Appearance Care 464
Ashtray 207
Auto Down Power Windows 40
Auto Up Power Windows 40,200
Automatic Dimming Mirror 113
Automatic Door Locks 33,34
Automatic Headlights 162
Automatic Temperature Control (ATC) 312

Automatic Transaxle 330
Adding Fluid 463
Fluid Level Check 463
Interlock System 331
Selection Of Lubricant 461,487
Shifting 332
Special Additives 463
Automatic Transmission 461,463
Adding Fluid 462,463
Fluid and Filter Changes 463
Fluid Change 463
Fluid Level Check 462
Fluid Type 461,487

Battery 447
Jump Starting 426
Keyless Transmitter Replacement (RKE) 26
Saving Feature (Protection) 164
Belts, Seat 102
Blind Spot Monitoring 117
Body Mechanism Lubrication 451
B-Pillar Location 357
Brake Assist System 349
Brake Control System, Electronic 347
Brake Fluid 487
Brake, Parking 343
Brake System 458
Fluid Check 459
Warning Light 237
Brakes 458
Brake/Transmission Interlock 331
Break-In Recommendations, New Vehicle 100
Bulb Replacement 480
Bulbs, Light 104,479

Calibration, Compass 250,256
Camera, Rear 186
Capacities, Fluid 485

Caps, Filler
Fuel 387
Oil (Engine) 443
Power Steering 342
Radiator (Coolant Pressure) 456
Car Washes 465
Carbon Monoxide Warning 101,383
Cargo Compartment
Luggage Carrier 222
Cargo (Vehicle Loading) 214
Caution, Exhaust Gas 51,383
Cellular Phone 125,302
Center High Mounted Stop Light 484
Changing A Flat Tire 413
Chart, Tire Sizing 353
Check Engine Light
(Malfunction Indicator Light) 240,438
Checking Your Vehicle For Safety 101
Checks, Safety 101
Child Restraint 87,89
Child Restraint Tether Anchors 93
Child Safety Locks 46
Child Seat 92
Clean Air Gasoline 379
Cleaning
Wheels 466
Climate Control 303
Clock 263,265,268,278
Coat Hook 214
Coin Holder 215
Cold Weather Operation 328
Compact Disc (CD) Maintenance 302
Compact Spare Tire 364
Compass 247,250,256
Compass Calibration 250,256
Compass Variance 249,257
Computer, Trip/Travel 254

Connector
UCI 289
Universal Consumer Interface (UCI) 289
Console 215
Console, Floor 215
Console, Overhead 189
Console, Removable 219
Contract, Service 511
Coolant Pressure Cap (Radiator Cap) 456
Cooling System 453
Adding Coolant (Antifreeze) 455
Coolant Capacity 485
Coolant Level 453,457
Disposal of Used Coolant 457
Drain, Flush, and Refill 454
Inspection 457
Points to Remember 457
Pressure Cap 456
Radiator Cap 456
Selection of Coolant (Antifreeze) 454,485,486
Cruise Control (Speed Control) 174
Cupholders 205,469
Customer Assistance 509

Daytime Running Lights 164
Dealer Service 440
Defroster, Rear Window 220
Defroster, Windshield 103,305,306,316
Diagnostic System, Onboard 437
Dimmer Control 161
Dipsticks
Automatic Transaxle 463
Automatic Transmission 462
Oil (Engine) 441
Power Steering 342
Disabled Vehicle Towing 431
Disposal
Antifreeze (Engine Coolant) 457

Engine Oil 444
Domelight 160
Door Locks 30
Door Locks, Automatic 33
Door Opener, Garage 192
Driving
On Slippery Surfaces 338
Through Flowing, Rising, or Shallow Standing Water 339
DVD Player (Video Entertainment System™) 298

E-85 Fuel 383
Electric Remote Mirrors 114
Electrical Power Outlets 201
Electronic Brake Control System 347
Brake Assist System 349
Electronic Stability Program 350
Electronic Speed Control (Cruise Control) 174
Electronic Stability Program (ESP) 350
Electronic Vehicle Information Center (EVIC) 186,250
Emergency, In Case of
Hazard Warning Flasher 412
Jacking 413,416
Jump Starting 426
Overheating 412
Emission Control System Maintenance 438,490
Engine 435,436
Air Cleaner 444
Block Heater 329
Break-In Recommendations 100
Checking Oil Level 441
Compartment 435,436
Coolant (Antifreeze) 486
Cooling 453
Exhaust Gas Caution 51,101,383
Flooded, Starting 328
Fuel Requirements 378,485
Oil 441,485,486

Oil Change Interval 442
Oil Disposal 444
Oil Filler Cap 443
Oil Filter Disposal 444
Oil Selection 442,485
Oil Synthetic 443
Overheating 412
Starting 327
Temperature Gauge 242
Enhanced Accident Response Feature 79
Exhaust Gas Caution 51,101,383
Exhaust System 101,445
Express Down Windows 22
Extender, Seat Belt 67
Exterior Folding Mirrors 114
Exterior Lights 104

Fabric Care 467
Filler Location Fuel 246
Filters
Air Cleaner 444
Air Conditioning 322,449
Engine Oil 444,486
Engine Oil Disposal 444
Flashers
Hazard Warning 412
Turn Signal 104,236
Flash-To-Pass 166
Flat Tire Stowage 423
Flexible Fuel Vehicles
Cruising Range 386
Engine Oil 386
Fuel Requirements 383,385
Maintenance 387
Replacement Parts 387
Starting 386
Flooded Engine Starting 328
Floor Console 215

Fluid Capacities 485
Fluid Leaks 105
Fluid Level Checks
  Automatic Transaxle 463
  Automatic Transmission 462
  Brake 459
  Power Steering 342
Fluids 486
Fluids, Lubricants and Genuine Parts 486
Fog Light Service 482
Fog Lights 164,240,482
Fold in Floor (Stow 'n Go) Seating 136
Freeing A Stuck Vehicle 430
Fuel 378
  Adding 387
  Additives 381
  Clean Air 379
  Filler Cap (Gas Cap) 246,387
  Filler Door (Gas Cap) 246
  Gasoline 378
  Gauge 233
  Light 233
  Octane Rating 486
  Requirements 378,485
  Tank Capacity 485
Fuel, Flexible . . . . . *See Flexible Fuel Vehicles*
Fuel System Caution 382
Fueling 387
Fuses 470

Garage Door Opener (HomeLink®) 192
Gas Cap (Fuel Filler Cap) 387,389,437
Gasoline, Clean Air 379
Gasoline (Fuel) 378
Gasoline, Reformulated 380
Gauges
  Coolant Temperature 242
  Fuel 233

Speedometer 236
Tachometer 240
Gearshift 332
General Information 16,26,378
Glass Cleaning 468
Grocery Bag Retainer 147
Gross Axle Weight Rating 390,395
Gross Vehicle Weight Rating 390,394

Hands-Free Phone (Uconnect™) 125
Hazard
Driving Through Flowing, Rising, or Shallow Standing Water 339
Hazard Warning Flasher 412
Head Restraints 132
Headlights 161
Cleaning 468
Lights On Reminder 163
Passing 166
Time Delay 163
Washers 163
Heated Mirrors 115
Heated Seats 131
Heater 303
Heater, Engine Block 329
High Beam/Low Beam Select (Dimmer) Switch . . 166
Hitches
Trailer Towing 398
HomeLink® (Garage Door Opener) Transmitter . . . 192
Hood Release 158
Hook, Coat 214

Ignition 13
Key 12,13
Ignition Key Removal 13
Illuminated Entry 18
Immobilizer (Sentry Key) 14
Infant Restraint 87,89

Information Center, Vehicle 250
Inside Rearview Mirror 112
Instrument Cluster 233
Instrument Panel and Controls 231
Instrument Panel Cover 467
Instrument Panel Lens Cleaning 469
Integrated Power Module (Fuses) 470
Interior Appearance Care 467
Interior Lights 160,161
Introduction 4

Jack Location 414
Jack Operation 413
Jump Starting 426

Key, Programming 16
Key, Replacement 15
Key, Sentry (Immobilizer) 14
Key-In Reminder 14
Keyless Entry System 19
Keys 12

Lane Change Assist 166
Lap/Shoulder Belts 53
LATCH
(Lower Anchors and Tether for CHildren) 93
Latches 105
  Hood 158
Lead Free Gasoline 378
Leaks, Fluid 105
Life of Tires 367
Liftgate 48
Light Bulbs 104
Lights 104,159
  Airbag 76,81,102,241
  Alarm 239
  Anti-Lock 239
  Automatic Headlights 162

Back-Up 482
Battery Saver 164
Brake Assist Warning 351
Brake Warning 237
Bulb Replacement 479,480
Center Mounted Stop 484
Daytime Running 164
Dimmer Switch, Headlight 161
Engine Temperature Warning 236
Exterior 104
Fog 164,240,482
Hazard Warning Flasher 412
Headlight Switch 161
Headlights On Reminder 163
High Beam Indicator 240
High Beam/Low Beam Select 166
Illuminated Entry 18
Interior 160,161
License 484
Lights On Reminder 163
Low Fuel 233
Malfunction Indicator (Check Engine) 240
Oil Pressure 236
Park 161,481
Passing 166
Reading 189
Rear Servicing 482
Rear Tail 482
Seat Belt Reminder 240
Security Alarm (Theft Alarm) 239
Service 479,480
Service Engine Soon (Malfunction Indicator) . . . 240
Side Marker 482
SmartBeams 166
Theft Alarm (Security Alarm) 239
Tire Pressure Monitoring (TPMS) 234
Turn Signal 104,481,482
Voltage 233

Warning (Instrument Cluster Description) 233
Load Leveling System 221
Loading Vehicle 214,389,392
Capacities 392
Tires 357
Locks
Door 30
Lower Anchors and Tether for CHildren
(LATCH) 93
Lubrication, Body 451
Luggage Rack (Roof Rack) 222
Lumbar Support 129

Maintenance Free Battery 447
Maintenance Procedures 440
Maintenance Schedule 490
Maintenance, Sunroof 201
Malfunction Indicator Light (Check Engine) . . 240,438
Manual, Service 513
Map/Reading Lights 189
Memory Feature (Memory Seat) 153
Memory Seat 115,153
Mini-Trip Computer 247,254
Mirrors 112
Automatic Dimming 113
Electric Remote 114
Exterior Folding 114
Heated 115
Memory 153
Outside 113
Rearview 112
Vanity 116
Modifications/Alterations, Vehicle 7
Monitor, Tire Pressure System 370
Mopar Parts 440,512
Multi-Function Control Lever 165

Navigation System (Uuconnect® gps) 186

New Vehicle Break-In Period 100

Occupant Restraints 52,75,79
Occupant Restraints (Sedan) 71,72,75,78
Odometer 245
Oil Change Indicator 244,246,254
Oil Change Indicator, Reset 244,246,254
Oil, Engine 441,486
  Capacity 485
  Change Interval 442
  Checking 441
  Disposal 444
  Filter 444,486
  Filter Disposal 444
  Identification Logo 442
  Materials Added to 443
  Recommendation 442,485
  Synthetic 443
  Viscosity 443,485
Onboard Diagnostic System 437,438
Opener, Garage Door (HomeLink®) 192
Operator Manual (Owner's Manual) 4
Outside Rearview Mirrors 112,113
Overhead Console 189
Overhead Travel Information Center 189
Overheating, Engine 242,412
Owner's Manual (Operator Manual) 4,513

Panic Alarm 23
Park Sense System, Rear 177
Parking Brake 343
Pedals, Adjustable 172
Personal Settings 258
Pets, Transporting 97
Phone, Cellular 125
Phone, Hands-Free (Uconnect™) 125
Placard, Tire and Loading Information 357

Power
Door Locks 32
Lift Gate 49
Mirrors 114
Outlet (Auxiliary Electrical Outlet) 201
Seats 130
Sliding Door 42
Steering 341,342
Sunroof 198
Windows 36
Windows, Express Down 22
Power Steering Fluid 487
Pregnant Women and Seat Belts 67
Preparation for Jacking 415
Pretensioners
Seat Belts 61
Programmable Electronic Features 258

Radial Ply Tires 364
Radiator Cap (Coolant Pressure Cap) 453,456
Radio Operation 302
Radio Remote Controls 300
Radio, Satellite (Uconnect® studios) 294,298
Rear Air Conditioning 309,317
Rear Camera 186
Rear Cross Path 123
Rear Heater 309
Rear Park Sense System 177
Rear Window Defroster 220
Rearview Mirrors 112
Reclining Front Seats 128
Recreational Towing 409,432
Reminder, Seat Belt 65,66
Remote Keyless Entry (RKE) 19
Remote Sound System (Radio) Controls 300
Remote Starting System 27
Removable Floor Console 219
Replacement Keys 15

Replacement Parts 440
Replacement Tires 367
Reporting Safety Defects 512
Resetting Oil Change Indicator 244,246,254
Restraint, Head 132
Restraints, Child 87,92
Restraints, Infant 87
Rocking Vehicle When Stuck 430
Roof Rack (Luggage Rack) 222
Rotation, Tires 369

Safety Checks Inside Vehicle 102
Safety Checks Outside Vehicle 104
Safety Defects, Reporting 512
Safety, Exhaust Gas 51,101
Safety Information, Tire 352
Safety Tips 101
Satellite Radio Antenna 295
Satellite Radio (Uconnect® studios) 294,298
Schedule, Maintenance 490
Seat Belt Maintenance 469
Seat Belt Reminder 65,66
Seat Belts 52,102
  Adjustable Shoulder Belt 59
  Adjustable Upper Shoulder Anchorage 59
  And Pregnant Women 67
  Child Restraint 87,89
  Extender 67
  Front Seat 53
  Inspection 102
  Pretensioners 61
  Rear Seat 53
Seats 126
  Adjustment 127
  Easy Entry 139
  Fold in Floor (Stow 'n Go) 136
  Heated 131
  Lumbar Support 129

Memory 153
Power 130
Reclining 128
Stow 'n Go (Fold in Floor) 136
Tilting 139
Security Alarm (Theft Alarm) 16
Selection of Coolant (Antifreeze) 454,486
Sentry Key (Immobilizer) 14
Sentry Key Programming 16
Sentry Key Replacement 15
Service Assistance 509
Service Contract 511
Service Engine Soon Light
(Malfunction Indicator) 240
Service Manuals 513
Setting the Clock 263,265,268,278
Settings, Personal 258
Shoulder Belts 53
Side Airbag 77
Signals, Turn 104,165,236,481,482
Sirius Backseat TV™ (Uconnect® studios) 298
Sliding Door 41
Slippery Surfaces, Driving On 338
SmartBeams 166
Snow Tires 368
Spare Tire 364,414
Speed Control (Cruise Control) 174
Speedometer 236
Starting 327
Automatic Transmission 327
Cold Weather 328
Engine Fails to Start 328
Remote 27
Starting and Operating 327
Starting Procedures 327
Steering
Power 341,342
Tilt Column 171

Steering Wheel Mounted Sound System Controls 300
Storage 207,479
Storage Bin 207
Storage, Vehicle 321,479
Storing Your Vehicle 479
Stow 'n Go (Fold in Floor) Seats 136
Sun Roof 198
Sunglasses Storage 190
Sunroof Maintenance 201
Supplemental Restraint System - Airbag 68
Synthetic Engine Oil 443
System, Remote Starting 27

Tachometer 240
Temperature Control, Automatic (ATC) 312
Temperature Gauge, Engine Coolant 242,413
Tether Anchor, Child Restraint 93
Tilt Steering Column 171
Tire and Loading Information Placard 357
Tire Identification Number (TIN) 355
Tire Markings 352
Tire Safety Information 352
Tires 104,361,515
Aging (Life of Tires) 367
Air Pressure 361
Changing 413
Compact Spare 364
Flat Changing 423
General Information 361
High Speed 363
Inflation Pressures 362
Jacking 413,416
Life of Tires 367
Load Capacity 357,358
Pressure Monitor System (TPMS) 370
Pressure Warning Light 234
Quality Grading 515
Radial 364

Replacement 367
Rotation 369
Safety 352,361
Sizes 353
Snow Tires 368
Spare Tire 414
Spinning 365
Tread Wear Indicators 366
Tongue Weight/Trailer Weight 401
Towing 394
Disabled Vehicle 431
Guide 399
Recreational 409,432
Weight 399
Traction Control 347
Traction Control Switch 347
Trailer Towing 394
Cooling System Tips 408
Hitches 398
Minimum Requirements 402
Trailer and Tongue Weight 401
Wiring 405
Trailer Towing Guide 399
Trailer Weight 399
Transaxle 330
Automatic 330
Operation 330
Selection of Lubricant 461,487
Transmission 461
Automatic 461
Fluid 461,487
Transmitter Battery Service
(Remote Keyless Entry) 26
Transmitter, Garage Door Opener (HomeLink®) . . 192
Transmitter, Remote Keyless Entry (RKE) 19
Transporting Pets 97
Tread Wear Indicators 366
Trip Computer 247

Trip Odometer 245
Turn Signals 165,236,481,482

UCI Connector 289
Uconnect™ (Hands-Free Phone) 125
Umbrella Holder 210
Uniform Tire Quality Grades 515
Universal Consumer Interface (UCI) Connector . . . 289
Universal Transmitter 192
Unleaded Gasoline 378
Upholstery Care 467

Vanity Mirrors 116
Variance, Compass 249,257
Vehicle Certification Label 389
Vehicle Identification Number (VIN) 6
Vehicle Loading 358,389,392
Vehicle Modifications/Alterations 7
Vehicle Storage 321,479
Video Entertainment System™
(Rear Seat Video System) 298
Voice Recognition System (VR) 126

Warning Flasher, Hazard 412
Warning Lights
(Instrument Cluster Description) 233
Warnings and Cautions 6
Warranty Information 512
Washer, Adding Fluid 452
Washing Vehicle 465
Water
Driving Through 339
Wheel and Wheel Trim 466
Wheel and Wheel Trim Care 466
Wheel Nut Torque 423
Wind Buffeting 41,200
Window Fogging 321
Windows 36

Power 36
Rear Vent 36
Windows, Express Down 22
Windshield Defroster 103
Windshield Washers 452
Windshield Wiper Blades 451
Wiper Blade Replacement 451

Zone Control (Temperature Control) 307

INSTALLATION OF RADIO TRANSMITTING EQUIPMENT

Special design considerations are incorporated into this vehicle's electronic system to provide immunity to radio frequency signals. Mobile two-way radios and telephone equipment must be installed properly by trained personnel. The following must be observed during installation.

The positive power connection should be made directly to the battery and fused as close to the battery as possible. The negative power connection should be made to body sheet metal adjacent to the negative battery connection. This connection should not be fused.

Antennas for two-way radios should be mounted on the roof or the rear area of the vehicle. Care should be used in mounting antennas with magnet bases. Magnets may affect the accuracy or operation of the compass on vehicles so equipped.

The antenna cable should be as short as practical and routed away from the vehicle wiring when possible. Use only fully shielded coaxial cable.

Carefully match the antenna and cable to the radio to ensure a low Standing Wave Ratio (SWR).

Mobile radio equipment with output power greater than normal may require special precautions.

All installations should be checked for possible interference between the communications equipment and the vehicle's electronic systems.

CHRYSLER

SERVICE

STICK WITH THE SPECIALISTS®

Chrysler Group LLC

10Y531-126-AC

3rd Edition Rev 1

Printed in U.S.A.