Foreword

The inside pages of this manual contain a minimum of 50% recycled fibers, including 10% post-consumer fibers.

Welcome to the growing family of new NISSAN owners. This vehicle is delivered to you with confidence. It was produced using the latest techniques and strict quality control.

This manual was prepared to help you understand the operation and maintenance of your vehicle so that you may enjoy many miles (kilometers) of driving pleasure. Please read through this manual before operating your vehicle.

A separate Warranty Information Booklet explains details about the warranties covering your vehicle. The "NISSAN Service and Maintenance Guide" explains details about maintaining and servicing your vehicle. Additionally, a separate Customer Care/Lemon Law Booklet (U.S. only) will explain how to resolve any concerns you may have with your vehicle, as well as clarify your rights under your state's lemon law.

Your NISSAN dealership knows your vehicle best. When you require any service or have any questions, they will be glad to assist you with the extensive resources available to them.

READ FIRST — THEN DRIVE SAFELY

Before driving your vehicle please read this owner's manual carefully. This will ensure familiarity with controls and maintenance requirements, assisting you in the safe operation of your vehicle.

⚠ WARNING

IMPORTANT SAFETY INFORMATION REMINDERS FOR SAFETY!

Follow these important driving rules to help ensure a safe and comfortable trip for you and your passengers!

- **NEVER drive under the influence of alcohol or drugs.**
- **ALWAYS observe posted speed limits and never drive too fast for conditions.**
- **ALWAYS use your seat belts and appropriate child restraint systems. Pre-teen children should be seated in the rear seat.**
- **ALWAYS provide information about the proper use of vehicle safety features to all occupants of the vehicle.**
- **ALWAYS review this owner's manual for important safety information.**

MODIFICATION OF YOUR VEHICLE

This vehicle should not be modified. Modification could affect its performance, safety or durability, and may even violate governmental regulations. In addition, damage or performance problems resulting from modifications may not be covered under NISSAN warranties.

WHEN READING THE MANUAL

This manual includes information for all options available on this model. Therefore, you may find some information that does not apply to your vehicle.

All information, specifications and illustrations in this manual are those in effect at the time of printing. NISSAN reserves the right to change specifications or design without notice and without obligation.

IMPORTANT INFORMATION ABOUT THIS MANUAL

The inside pages of this manual contain a minimum of 50% recycled fibers, including 10% post-consumer fibers.

You will see various symbols in this manual. They are used in the following ways:

WARNING

This is used to indicate the presence of a hazard that could cause death or serious personal injury. To avoid or reduce the risk, the procedures must be followed precisely.

CAUTION

This is used to indicate the presence of a hazard that could cause minor or moderate personal injury or damage to your vehicle. To avoid or reduce the risk, the procedures must be followed carefully.

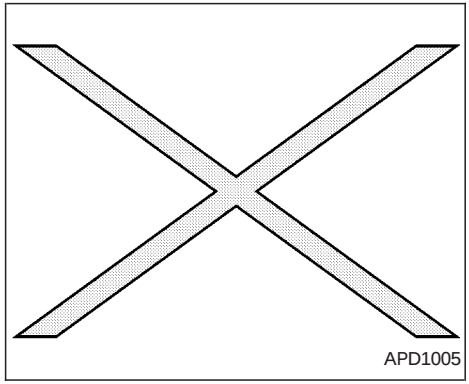

If you see this symbol, it means ‘‘Do not do this’’ or ‘‘Do not let this happen.’’

CALIFORNIA PROPOSITION 65 WARNING

WARNING

Engine Exhaust, some of its constituents, and certain vehicle components contain or emit chemicals known to State of California to cause cancer and birth defects or other reproductive harm.

© 2002 NISSAN NORTH AMERICA, INC.
GARDENA, CALIFORNIA

All rights reserved. No part of this Owner’s Manual may be reproduced or stored in a retrieval system, or transmitted in any form, or by any means, electronic, mechanical, photocopying, recording or otherwise, without the prior written permission of Nissan North America, Inc., Gardena, California.

Welcome To The World Of NISSAN

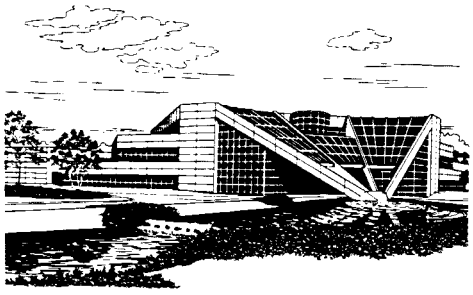

NISSAN TECHNICAL CENTER NORTH AMERICA, INC.
in Farmington Hills, Michigan

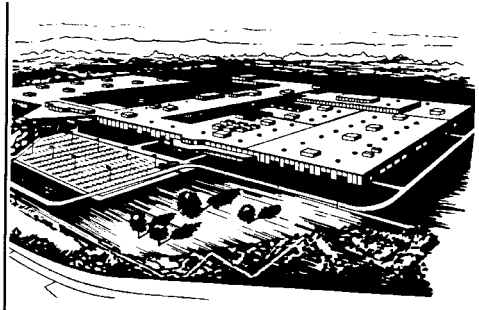

NISSAN MANUFACTURING FACILITY
in Smyrna, Tennessee

WFW0002

Your new NISSAN is the result of our dedication to produce the finest in safe, reliable and economical transportation. Your vehicle is the product of a successful worldwide company that manufactures cars and trucks in over 17 countries and distributes them in 170 nations.

NISSAN vehicles are designed and manufactured by Nissan Motor Co., Ltd. which was founded in Tokyo, Japan in 1933, and NISSAN affiliates world wide, collectively growing to become the fifth largest automaker in the world. In addition to cars and trucks, NISSAN also makes forklift trucks, marine engines, boats and other diversified products.

NISSAN has made a substantial and growing investment in North America. NISSAN's commitment is nearly $4 billion dollars in capital investments in facilities across the continent. Some of the facilities include the Nissan Manufacturing facility in Smyrna, Tennessee, vehicle styling design at Nissan Design America, Inc. in San Diego, California, and engineering at Nissan Technical Center North America in Farmington Hills, Michigan. Additionally, NISSAN employs nearly 18,000 people throughout the United States, Canada, and Mexico. An additional 71,000 people work for the 1,500 NISSAN and INFINITI dealers across North America.

NISSAN is also a substantial contributor to the Canadian economy. Nissan Canada Inc., its suppliers and over 140 dealers employ approximately 4,500 people. These include company employees and the staffs of NISSAN dealers all across Canada. In addition, many Canadians work for companies that supply NISSAN and NISSAN dealers with materials and services ranging from operation of port facilities and transportation services, to the supply of lubricants, parts and accessories.

NISSAN pioneered the use of electronics and computers in automobiles, and has led the industry in improving both performance and fuel efficiency through new engine designs and the use of synthetic materials to reduce vehicle weight. The company has also developed ways to build quality into its vehicles at each stage of the production process, both through extensive use of automation and — most importantly — through an awareness that **people** are the central element in quality control.

From the time the parts arrived from our suppliers until you took delivery of your new NISSAN, dozens of checks were made to ensure that only the best job was being done in producing and delivering your vehicle. NISSAN also takes great care to ensure that when you take your NISSAN to your dealer for maintenance, the service technician will perform his work according to the quality standards that have been established by the factory.

Safety has also been built into your NISSAN. As you know, seat belts are an integral part of the safety systems that will help protect you and your passengers in the event of a sudden stop or an accident. We urge you to use the seat belts every time you drive the vehicle.

The NISSAN story of growth and achievement reflects our major goal: to provide you, our customer, with a vehicle that is built with quality and craftsmanship — a product that we can be proud to build and you can be proud to own.

NISSAN CUSTOMER CARE PROGRAM

NISSAN CARES ...

Both NISSAN and your NISSAN dealer are dedicated to serving all your automotive needs. Your satisfaction with your vehicle and your NISSAN dealer are our primary concerns. Your NISSAN dealer is always available to assist you with all your automobile sales and service needs.

However, if there is something that your NISSAN dealer cannot assist you with or you would like to provide NISSAN directly with comments or questions, please contact the NISSAN Consumer Affairs Department using our toll-free number:

For U.S. mainland and Alaska customers
1-800-NISSAN-1
(1-800-647-7261)
For Hawaii customers
(808) 836-0888 (Oahu Number)
For CANADIAN customers
1-800-387-0122

The Consumer Affairs Department will ask for the following information:

— Your name, address, and telephone number
— Vehicle identification number (attached to the top of the instrument panel on the driver's side)
— Date of purchase
— Current odometer reading
— Your NISSAN dealer's name
— Your comments or questions

OR

You can write to NISSAN with the information on the left at:

For U.S. mainland and Alaska customers
Nissan North America, Inc.
Consumer Affairs Department
P.O. Box 191
Gardena, California 90248-0191

For Hawaii customers
Nissan Motor Corporation in Hawaii
2880 Kilihau St.
Honolulu, Hawaii 96819

For Canadian customers
Nissan Canada Inc.
5290 Orbitor Drive
Mississauga, Ontario L4W 4Z5

We appreciate your interest in NISSAN and thank you for buying a quality NISSAN vehicle.

Table of Contents

Seats, restraints and supplemental air bag systems	1
Instruments and controls	2
Pre-driving checks and adjustments	3
Heater, air conditioner and audio systems	4
Starting and driving	5
In case of emergency	6
Appearance and care	7
Maintenance and do-it-yourself	8
Technical and consumer information	9
Index	10

1 Seats, restraints and supplemental air bag systems

Seats 1-2
Front seat adjustment.....1-2
Folding rear seat 1-4
Head restraint adjustment 1-5
Supplemental restraint system.....1-6
Precautions on supplemental restraint system 1-6
Supplemental air bag warning labels.....1-16
Supplemental air bag warning light.....1-16
Seat belts 1-18
Precautions on seat belt usage 1-18
Child safety.....1-19
Pregnant women 1-20
Injured persons.....1-20
Three-point type seat belt with retractor 1-21
Seat belt extenders 1-24
Seat belt maintenance 1-24
Child restraints 1-25
Precautions on child restraints.....1-25
Installation on rear seat center or outboard positions 1-26
LATCH (Lower anchors and tether for children) system 1-32
Top tether strap child restraint 1-34
Installation on front passenger seat.....1-35

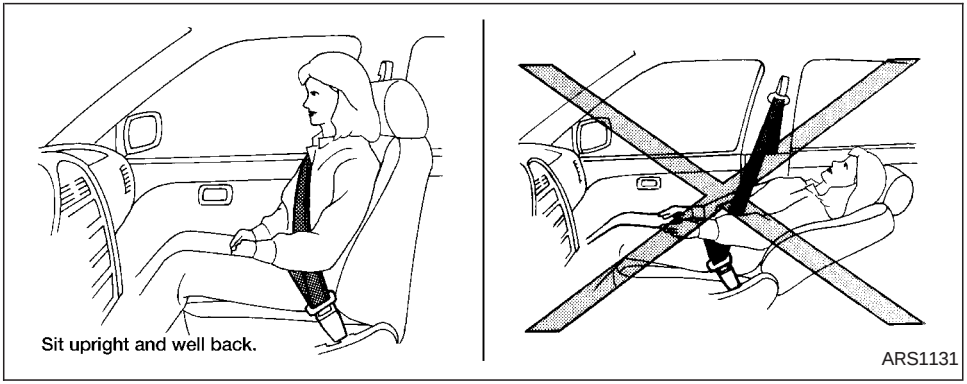

WARNING

- **Do not ride in a moving vehicle when the seatback is reclined. This can be dangerous. The shoulder belt will not be against your body. In an accident, you could be thrown into it and receive neck or other serious injuries. You could also slide under the lap belt and receive serious internal injuries.**

- **For most effective protection when the vehicle is in motion, the seat should be upright. Always sit well back in the seat and adjust the seat properly. See ‘‘Precautions on seat belt usage’’ later in this section.**

FRONT SEAT ADJUSTMENT

WARNING

- **Do not adjust the driver’s seat while driving so full attention may be given to vehicle operation. The seat may move suddenly and could cause loss of control of the vehicle.**
- **After adjustment, gently rock in the seat to make sure it is securely locked.**

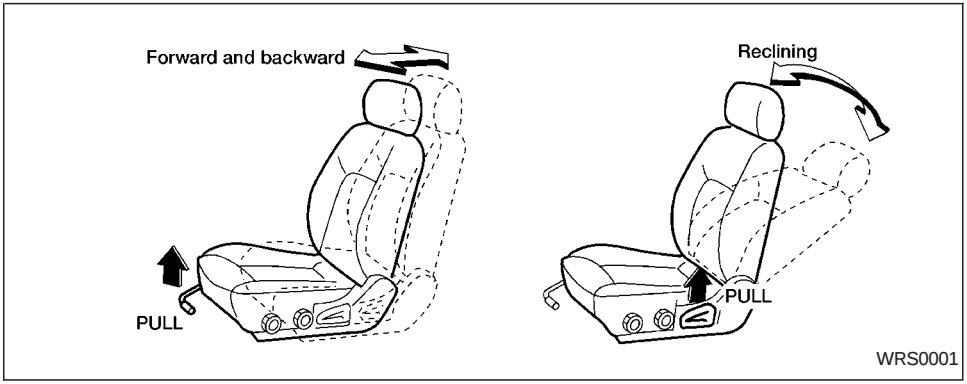

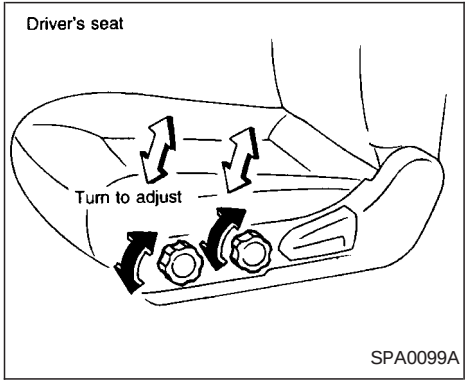

Forward and backward

Pull the lever up while you slide the seat forward or backward to the desired position. Release the lever to lock the seat in position.

Reclining

To recline the seatback, pull the lever up and lean back. To bring the back of the seat forward again, pull the lever and move your body forward.

Seat lifter

Turn either dial to adjust the angle and height of the seat cushion to the desired position.

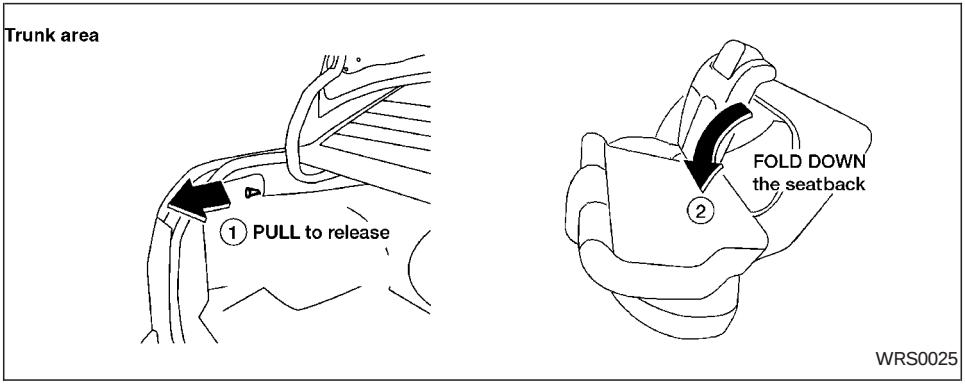

FOLDING REAR SEAT

Interior trunk access (if so equipped)

The trunk can be accessed from the rear seat for loading and unloading, as shown.

⚠ WARNING

- **Never allow anyone to ride in the luggage area or on the rear seat when it is in the fold-down position. Use of these areas by passengers without proper restraints could result in serious injury in an accident or sudden stop.**
- **Properly secure all cargo to help prevent it from sliding or shifting. Do not place cargo higher than the seatbacks. In a sudden stop or collision, unsecured cargo could cause personal injury.**
- **When returning seatbacks to the upright position, be certain they are completely secured in the latched position.**
- **Closely supervise children when they are around cars to prevent them from playing and becoming locked in the trunk where they could be seriously injured. Keep the car locked, with the rear seatback securely latched, when not in use, and prevent children's access to car keys.**

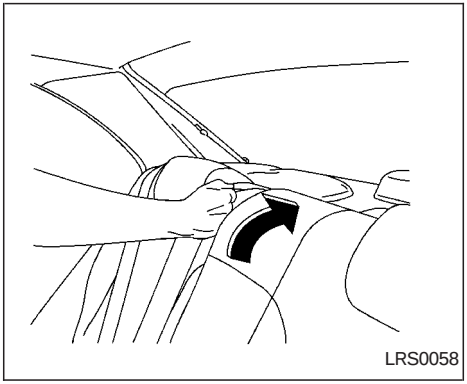

When using the fold down rear seatback, the rear center seat belt retractor may lock up and prevent folding down the seatback.

If the rear center seat belt retractor has inadvertently locked up, push the seat belt webbing toward the retractor as shown in the above illustration. This will unlock the seat belt retractor and allow the rear seat-back to fold down.

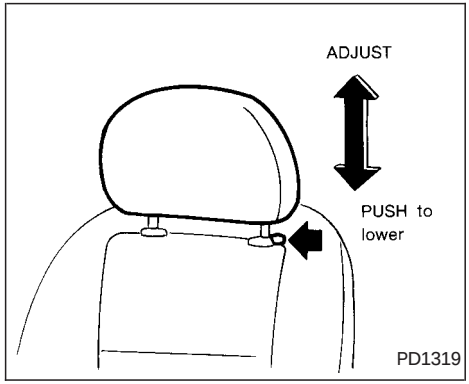

HEAD RESTRAINT ADJUST-MENT

To raise the head restraint, pull it up. To lower, push and hold the lock knob and push the head restraint down.

⚠ WARNING

Head restraints should be adjusted properly as they may provide significant protection against injury in an accident. Do not remove them. Check the adjust-ment after someone else uses the seat.

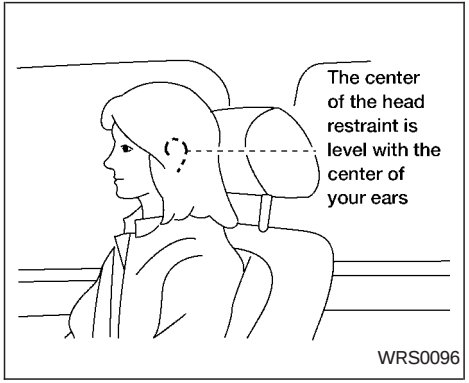

Adjust the head restraints so the center is level with the center of your ears.

SUPPLEMENTAL RESTRAINT SYSTEM

PRECAUTIONS ON SUPPLEMENTAL RESTRAINT SYSTEM

This Supplemental Restraint System (SRS) section contains important information concerning the driver and passenger supplemental front air bags, supplemental side air bags and pre-tensioner seat belts.

Supplemental front air bag system: This system can help cushion the impact force to the face and chest of the driver and front passenger in certain frontal collisions.

Supplemental side air bag system (if so equipped): This system can help cushion the impact force to the head and the chest area of the driver and front passenger in certain side impact collisions. The supplemental side air bag is designed to inflate on the side where the vehicle is impacted.

These supplemental restraint systems are designed to **supplement** the crash protection provided by the driver and front passenger seat belts and are **not a substitute** for them. Seat belts should always be correctly worn and the driver and front passenger seated a suitable distance away from the steering wheel, instrument panel and front door finishers. (See ‘‘Seat belts’’ later in this section for instructions and precautions on seat belt usage.)

The supplemental air bags operate only when the ignition switch is in the ON or START position.

After turning the ignition key to the ON position, the supplemental air bag warning light illuminates. The supplemental air bag warning light will turn off after about 7 seconds if the system is operational.

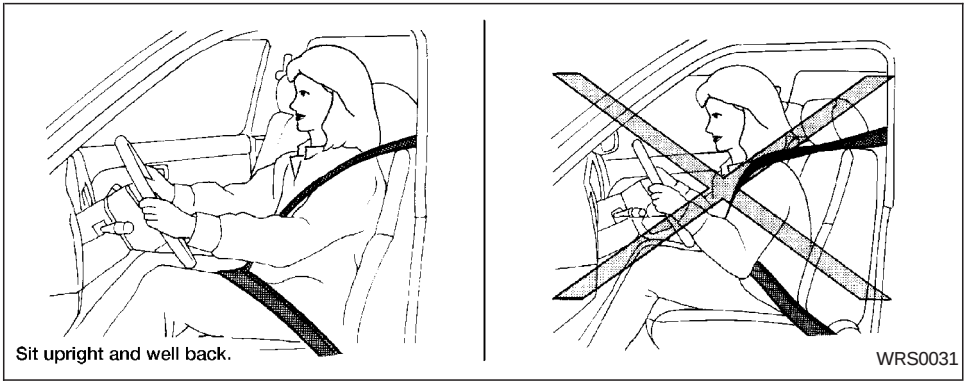

WARNING

- **The supplemental front air bags ordinarily will not inflate in the event of a side impact, rear impact, roll over, or lower severity frontal collision. Always wear your seat belts to help reduce the risk or severity of injury in various kinds of accidents.**
- **The seat belts and the supplemental front air bags are most effective when you are sitting well back and upright in the seat. The front air bags inflate with great force. If you are unrestrained, leaning forward, sitting sideways or out of position in any way, you are at greater risk of injury or death in a crash. You may also receive serious or fatal injuries from the supplemental front air bag if you are up against it when it inflates. Always sit back against the seatback and as far away as practical from the steering wheel or instrument panel. Always use the seat belts.**
- **Keep hands on the outside of the steering wheel. Placing them inside the steering wheel rim could increase the risk that they are injured when the supplemental front air bag inflates.**

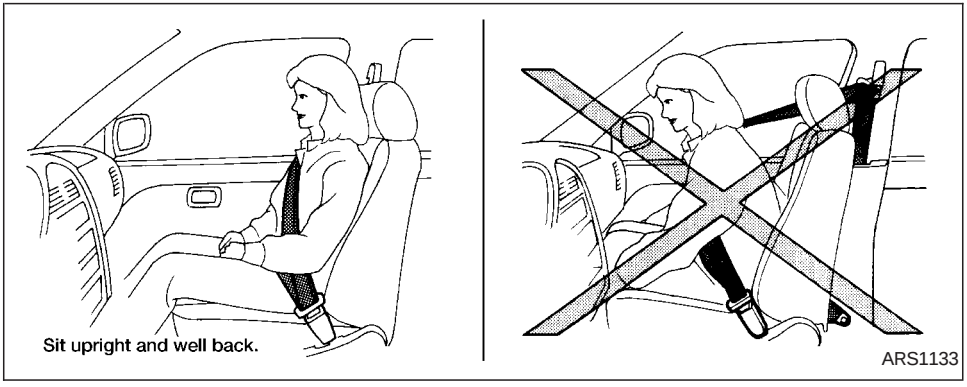
Sit upright and well back.
ARS1133

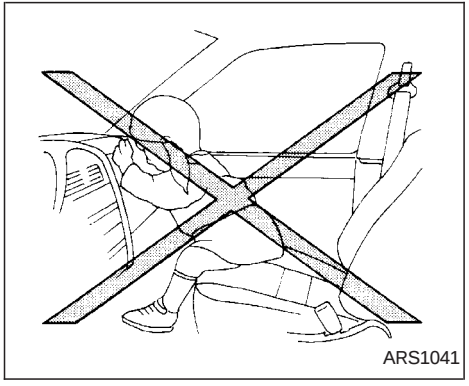
ARS1041

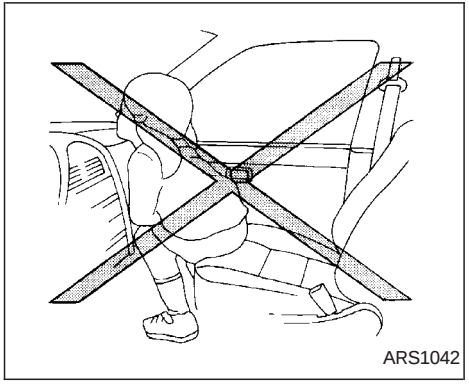
ARS1042

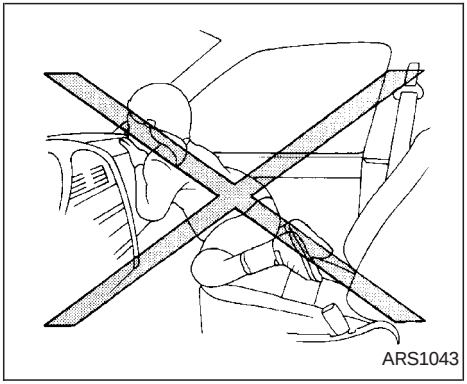
ARS1043

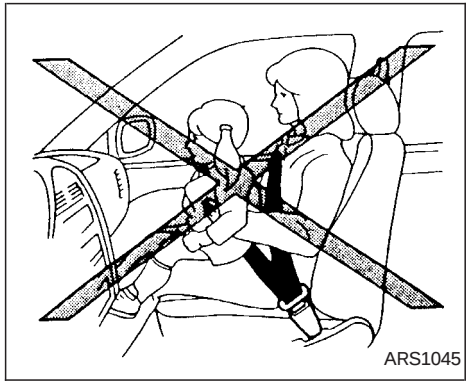
ARS1045

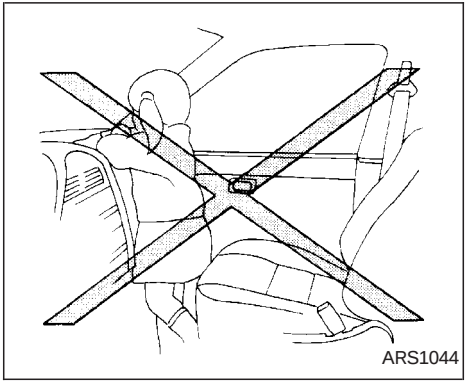
ARS1044

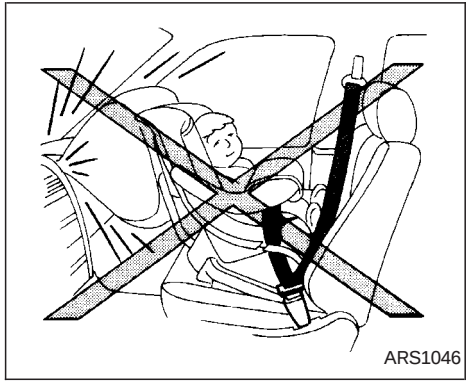
ARS1046

⚠ WARNING

- **Never let children ride unrestrained. Do not attempt to hold them in your lap or arms. Some examples of dangerous riding positions are shown in the illustrations.**
- **Children may be severely injured or killed when the supplemental front air bag inflates if they are not properly restrained.**
- **Never install a rear-facing child restraint in the front seat. An inflating supplemental front air bag could seriously injure or kill your child. See ‘‘Child restraints’’ later in this section for details.**

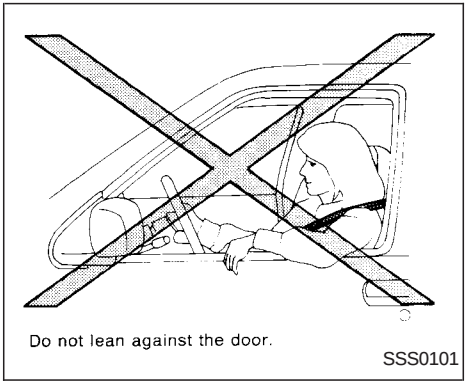

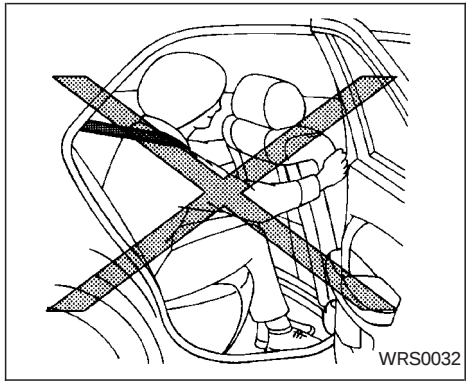

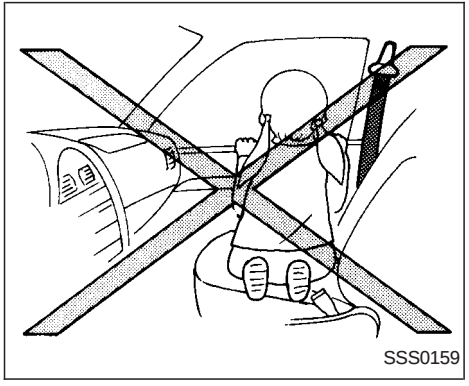

⚠ WARNING

Supplemental side air bag (if so equipped):

- **The supplemental side air bag ordinarily will not inflate in the event of a frontal impact, rear impact or lower severity side collision. Always wear your seat belt to help reduce the risk or severity of injury in various kinds of accidents.**
- **The seat belts and the supplemental side air bag are most effective when you are sitting well back and upright in the seat. The side air bag inflates with great force. Do not allow anyone to place their hand, leg or face near the side air bag on the side of the seatback of the front seat. Do not allow anyone sitting in the front seat to extend their hand out of the window or lean against the door.**

  When sitting in the rear seat, do not hold onto the seatback of the front seat. If the side air bag inflates, you may be seriously injured. Be especially careful with children, who should always be properly restrained. Some examples of dangerous riding positions are shown in the illustrations.
- **Do not use seat covers on the front seatbacks. They may interfere with supplemental side air bag inflation.**

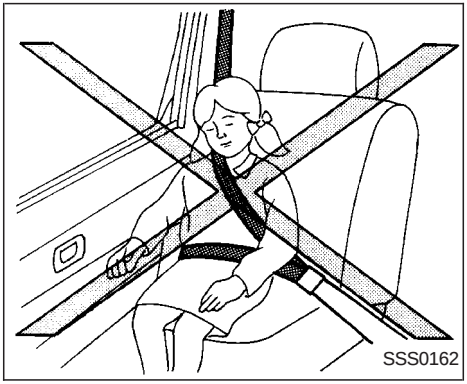

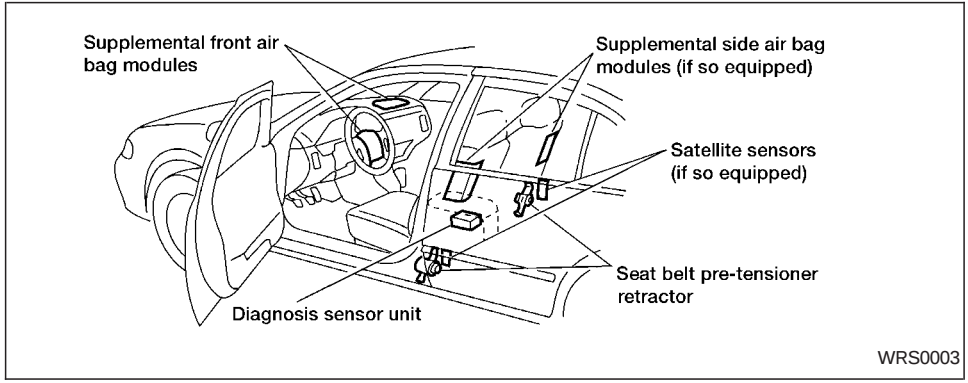

Supplemental front air bag system

The driver supplemental front air bag is located in the center of the steering wheel. The passenger supplemental front air bag is mounted in the dashboard above the glove box.

These systems are designed to meet optional certification requirements under U.S. regulations. They are also permitted in Canada. The optional certification allows the front air bags to be designed to inflate somewhat less forcefully than previously. **However, all of the information, cautions and warnings in this manual still apply and must be followed.**

The front air bag system is designed to inflate in higher severity frontal collisions, although it may inflate if the forces in another type of collision are similar to those of a higher severity frontal impact. It may not inflate in certain frontal collisions. Vehicle damage (or lack of it) is not always an indication of proper supplemental front air bag system operation.

When the supplemental front air bag inflates, a fairly loud noise may be heard, followed by the release of smoke. This smoke is not harmful and does not indicate

a fire. Care should be taken to not inhale it, as it may cause irritation and choking. Those with a history of a breathing condition should get fresh air promptly.

The supplemental front air bags, along with the use of seat belts, help to cushion the impact force on the face and chest of the occupant. They can help save lives and reduce serious injuries. However, an inflating front air bag may cause facial abrasions or other injuries. Front air bags do not provide restraint to the lower body.

Seat belts should be correctly worn and the driver and passenger seated upright as far as practical away from the steering wheel or instrument panel. The supplemental front air bags inflate quickly in order to help protect the front occupants. Because of this, the force of the front air bag inflating can increase the risk of injury if the occupant is too close to, or is against, the front air bag module during inflation.

The front air bags deflate quickly after a collision.

The supplemental front air bags operate only when the ignition switch is in the ON or START position.

After turning the ignition key to the ON position, the supplemental air bag warning light illuminates. The supplemental air bag warning light will turn off after about 7 seconds if the system is operational.

⚠ WARNING

- **Do not place any objects on the steering wheel pad or on the instrument panel. Also, do not place any objects between any occupant and the steering wheel or instrument panel. Such objects may become dangerous projectiles and cause injury if the supplemental front air bag inflates.**
- **Right after inflation, several front air bag system components will be hot. Do not touch them; you may severely burn yourself.**
- **No unauthorized changes should be made to any components or wiring of the supplemental front air bag system. This is to prevent accidental inflation of the front air bags or damage to the front air bag system.**
- **Do not make unauthorized changes to your vehicle's electrical system, suspension system or front end structure. This could affect proper operation of the supplemental front air bag system.**
- **Tampering with the supplemental front air bag system may result in serious personal injury. For example, do not change the steering wheel and instrument panel assembly by placing material over the steering wheel pad and above the dashboard or by installing additional trim material around the front air bag system.**
- **Work around and on the supplemental front air bag system should be done by an authorized NISSAN dealer. Installation of electrical equipment should also be done by an authorized NISSAN dealer. The SRS wiring should not be modified or disconnected. Unauthorized electrical test equipment and probing devices should not be used on the supplemental front air bag system.**

- **A cracked windshield should be replaced immediately by a qualified repair facility. A cracked windshield could affect inflation of the supplemental air bag system.**
- **The SRS wiring harness connectors are yellow for easy identification.**

When selling your vehicle, we request that you inform the buyer about the supplemental front air bag system and guide the buyer to the appropriate sections in this Owner's Manual.

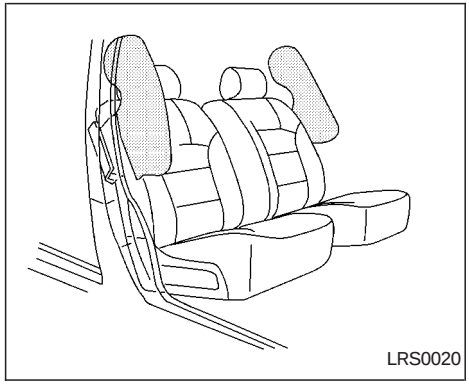

Supplemental side air bag system (if so equipped)

The supplemental side air bags are located in the outside of the seatback of the front seats. The supplemental side air bag (on the driver or front passenger seat) is designed to inflate in higher severity side collisions, although it may inflate if the forces in another type of collision are similar to those of a higher severity side impact. It is designed to inflate on the side where the vehicle is impacted. It may not inflate in certain side collisions. Vehicle damage (or lack of it) is not always an indication of proper supplemental side air bag operation.

When the supplemental side air bag inflates, a fairly loud noise may be heard, followed by release of smoke. This smoke is not harmful and does not indicate a fire. Care should be taken to not inhale it, as it may cause irritation and choking. Those with a history of a breathing condition should get fresh air promptly.

Supplemental side air bags, along with the use of seat belts, help to cushion the impact force on the chest of the front occupants. They can help save lives and reduce serious injuries. However, an inflating side air bag may cause abrasions or other injuries. Side air bags do not provide restraint to the lower body.

The seat belts should be correctly worn and the driver and passenger seated upright as far as practical away from the supplemental side air bag. The side air bag inflates quickly in order to help protect the front occupants. Because of this, the force of the side air bag inflating can increase the risk of injury if the occupant is too close to, or is against, the side air bag module during inflation. The side air bag will deflate quickly after a collision.

The supplemental side air bags operate only when the ignition switch is in the ON or START position.

After turning the ignition key to the ON position, the supplemental air bag warning light illuminates. The supplemental air bag warning light will turn off after about 7 seconds if the system is operational.

⚠ WARNING

- **Do not place any objects near the seatback of the front seats. Also, do not place any objects (an umbrella, bag, etc.) between the front door finisher and the front seat. Such objects may become dangerous projectiles and cause injury if the supplemental side air bag inflates.**
- **Right after inflation, several supplemental side air bag system components will be hot. Do not touch them; you may severely burn yourself.**
- **No unauthorized changes should be made to any components or wiring of the supplemental side air bag system. This is to prevent accidental inflation of the side air bag or damage to the side air bag system.**
- **Do not make unauthorized changes to your vehicle's electrical system, suspension system or side panel. This could affect proper operation of the side air bag system.**
- **Tampering with the supplemental side air bag system may result in serious personal injury. For example, do not change the front seat assembly by placing material near the seatback of the front seat or by installing additional trim material, such as seat covers, around the side air bag system.**
- **Work around and on the supplemental side air bag system should be done by an authorized NISSAN dealer. Installation of electrical equipment should also be done by an authorized NISSAN dealer. The SRS wiring harnesses* should not be modified or disconnected. Unauthorized electrical test equipment and probing devices should not be used on the side air bag system.**

*** The SRS wiring harness connectors are yellow for easy identification.**

When selling your vehicle, we request that you inform the buyer about the supplemental side air bag system and guide the buyer to the appropriate sections in this Owner's Manual.

Pre-tensioner seat belt system (For front seats)

⚠ WARNING

- **The pre-tensioner seat belt cannot be reused after activation. It must be replaced together with the retractor as a unit.**
- **If the vehicle becomes involved in a frontal collision but the pre-tensioner is not activated, be sure to have the pre-tensioner system checked and, if necessary, replaced by your NISSAN dealer.**

- **No unauthorized changes should be made to any components or wiring of the pre-tensioner seat belt system. This is to prevent accidental activation of the pre-tensioner seat belt or damage to the pre-tensioner seat belt operation. Tampering with the pre-tensioner seat belt system may result in serious personal injury.**
- **Work around and on the pre-tensioner system should be done by an authorized NISSAN dealer. Installation of electrical equipment should also be done by an authorized NISSAN dealer. Unauthorized electrical test equipment and probing devices should not be used on the pre-tensioner seat belt system.**
- **If you need to dispose of the pre-tensioner or scrap the vehicle, contact an authorized NISSAN dealer. Correct pre-tensioner disposal procedures are set forth in the appropriate NISSAN Service Manual. Incorrect disposal procedures could cause personal injury.**

The front seat pre-tensioner seat belt system activates in conjunction with the supplemental front air bag. Working with the seat belt retractor, it helps tighten the seat belt the instant the vehicle becomes involved in certain types of collisions, thereby restraining seat occupants.

The pre-tensioner is encased with the seat belt's retractor. These seat belts are used the same as conventional seat belts.

When the pre-tensioner seat belt activates, smoke is released and a loud noise may be heard. This smoke is not harmful and does not indicate a fire. Care should be taken to not inhale it, as it may cause irritation and choking. Those with a history of a breathing condition should get fresh air promptly.

If any abnormality occurs in the pre-tensioner system, the supplemental air bag warning light will flash intermittently after the ignition key is turned to the ON or START position. In this case, the pre-tensioner seat belt will not function properly.

When selling your vehicle, we request that you inform the buyer about the pre-tensioner seat belt system and guide the buyer to the appropriate sections in this Owner's Manual.

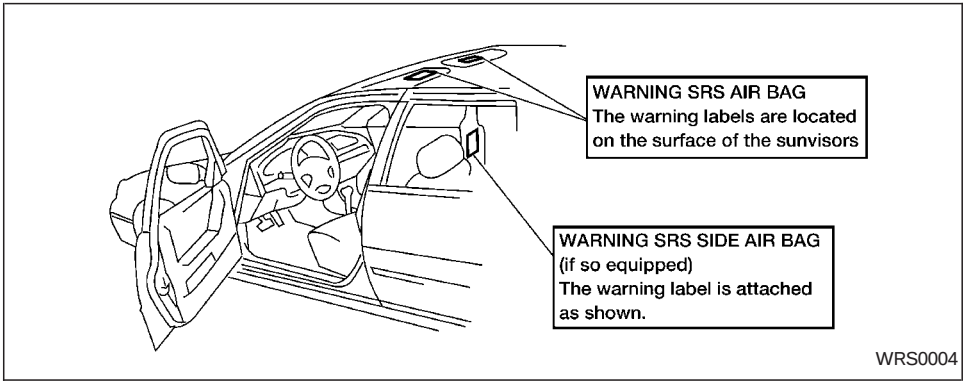

SUPPLEMENTAL AIR BAG WARNING LABELS

Warning labels about the supplemental air bag systems are placed in the vehicle as shown in the illustration.

SUPPLEMENTAL AIR BAG WARNING LIGHT

The supplemental air bag warning light, displaying in the instrument panel, monitors the circuits of the supplemental front air bags, pre-tensioner seat belt and supplemental side air bag (if so equipped) systems. The circuits monitored by the supplemental air bag warning light are the diagnosis sensor unit, supplemental air bag modules, pre-tensioner seat belts and all related wiring.

When the ignition key is in the ON or START position, the supplemental air bag warning light illuminates for about 7 seconds and then turns off. This means the system is operational.

If any of the following conditions occur, the supplemental front air bag, supplemental side air bag and pre-tensioner seat belt systems need servicing:

- The supplemental air bag warning light remains on after approximately 7 seconds.
- The supplemental air bag warning light flashes intermittently.
- The supplemental air bag warning light does not come on at all.

Under these conditions, the supplemental front air bag, supplemental side air bag or pre-tensioner seat belt systems may not operate properly. It must be checked and repaired. Take your vehicle to the nearest authorized NISSAN dealer.

⚠ WARNING

If the supplemental air bag warning light is on, it could mean that the supplemental front air bag or supplemental side air bag system will not operate in an accident.

Repair and replacement procedure

The supplemental air bag modules are designed to inflate on a one-time-only basis. As a reminder, unless it is damaged, the supplemental air bag light remains illuminated after inflation has occurred. Repair and replacement of the supplemental air bag system should be done only by an authorized NISSAN dealer.

After a supplemental air bag inflates, the instrument panel assembly should be replaced by an authorized NISSAN dealer if damaged.

When maintenance work is required on the vehicle, the supplemental front air bags, supplemental side air bags, pre-tensioner seat belts and related parts should be pointed out to the person performing the maintenance. The ignition key should always be in the LOCK position when working under the hood or inside the vehicle.

⚠ WARNING

- **Once the supplemental front air bag or supplemental side air bag has inflated, the air bag module will not function again and must be replaced. Additionally, if any of the supplemental air bags inflate, the pre-tensioner seat belts must also be replaced. The air bag module and pre-tensioner seat belt system should be replaced by an authorized NISSAN dealer. The air bag module and pre-tensioner seat belt system cannot be repaired.**
- **The supplemental front air bag and supplemental side air bag systems should be inspected by an authorized NISSAN dealer if there is any damage to the front end or side portion of the vehicle, or replaced if the supplemental air bag has inflated.**
- **If you need to dispose of a supplemental air bag, pre-tensioner seat belt system and or scrap the vehicle, contact an authorized NISSAN dealer. Correct supplemental air bag disposal procedures are set forth in the appropriate NISSAN Service Manual. Incorrect disposal procedures could cause personal injury.**

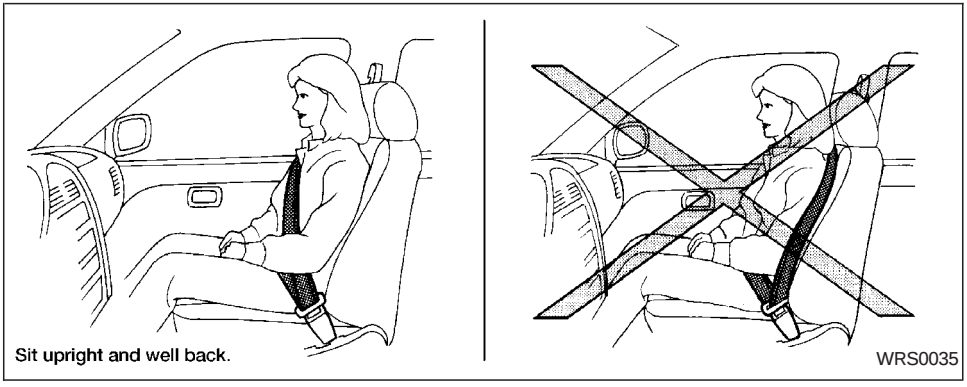

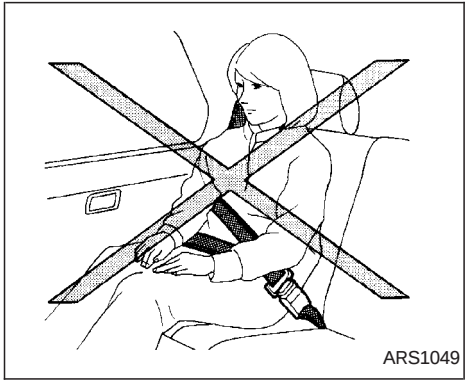

PRECAUTIONS ON SEAT BELT USAGE

If you are wearing your seat belt properly adjusted, your chances of being injured or killed in an accident and/or the severity of injury may be greatly reduced. NISSAN strongly encourages you and all of your passengers to buckle up every time you drive, even if your seating position includes a supplemental air bag.

Most states and all Canadian provinces or territories require that seat belts be worn at all times when a vehicle is being driven.

WARNING

- **Every person who drives or rides in this vehicle should use a seat belt at all times. Children should be properly restrained and, if appropriate, in a child restraint.**
- **The belt should be properly adjusted to a snug fit. Failure to do so may reduce the effectiveness of the entire restraint system and increase the chance or severity of injury in an accident. Serious injury or death can occur if the seat belt is not worn properly.**
- **Always route the shoulder belt over your shoulder and across your chest. Never run the belt behind your back, under your arm or across your neck. The belt should be away from your face and neck, but not falling off your shoulder.**
- **Position the lap belt as low and snug as possible AROUND THE HIPS, NOT THE WAIST. A lap belt worn too high could increase the risk of internal injuries in an accident.**
- **Be sure the seat belt tongue is securely fastened to the proper buckle.**

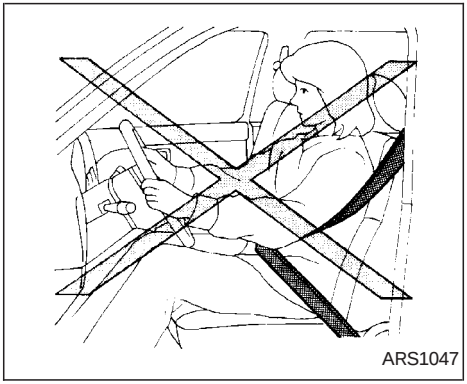

- **Do not wear the belt inside out or twisted. Doing so may reduce its effectiveness.**
- **Do not allow more than one person to use the same belt.**
- **Never carry more people in the vehicle than there are seat belts.**
- **If the seat belt warning light glows continuously while the ignition is turned ON with all doors closed and all seat belts fastened, it may indicate a malfunction in the system. Have the system checked by an authorized NISSAN dealer.**

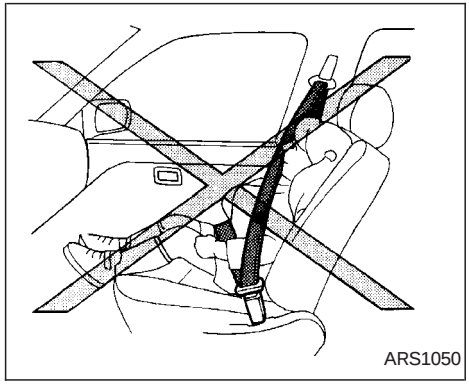

- **All seat belt assemblies including retractors and attaching hardware should be inspected after any collision by an authorized NISSAN dealer. NISSAN recommends that all seat belt assemblies in use during a collision be replaced unless the collision was minor and the belts show no damage and continue to operate properly. Seat belt assemblies not in use during a collision should also be inspected and replaced if either damage or improper operation is noted.**

- **All child restraints and attaching hardware should be inspected after any collision. Always follow the restraint manufacturer's inspection instructions and replacement recommendations. The child restraints should be replaced if they are damaged.**

CHILD SAFETY

Children need adults to help protect them. They need to be properly restrained.

The proper restraint depends on the child's size. Generally, infants up to about one year and less than 20 pounds (9 kg) should be placed in rear facing child restraints. Front facing child restraints are available for children who outgrow rear facing child restraints.

⚠ WARNING

Infants and children need special protection. The vehicle's seat belts may not fit them properly. The shoulder belt may come too close to the face or neck. The lap belt may not fit over their small hip bones. In an accident, an improperly fitting seat belt could cause serious or fatal injury. Always use appropriate child restraints.

All U.S. states and Canadian provinces or territories require the use of approved child restraints for infants and small children. See ''Child restraints'' later in this section.

In addition, there are many types of child restraints available for larger children which should be used for maximum protection.

NISSAN recommends that all pre-teens and children be restrained in the rear seat if possible. According to accident statistics, children are safer when properly restrained in the rear seat than in the front seat. This is especially important because your vehicle has a supplemental restraint system (Air bag system) for the front passenger. See ''Supplemental restraint system'' earlier in this section.

Infants and small children

NISSAN recommends that infants and small children be placed in child restraints that comply with Federal Motor Vehicle Safety Standard 213 or Canadian Motor Vehicle Safety Standard 213. You should choose a child restraint that fits your vehicle and always follow the manufacturer's instructions for installation and use.

Larger children

Children who are too large for child restraints should be seated and restrained by the seat belts which are provided.

If the child's seating position has a shoulder belt that fits close to the face or neck, the use of a booster seat (commercially available) may help overcome this. The booster seat should raise the child so that the shoulder belt is properly positioned across the top, middle portion of the shoulder and the lap belt is low on the hips. The booster seat should fit the vehicle seat and have a label certifying that it complies with Federal Motor Vehicle Safety Standard 213 or Canadian Motor Vehicle Safety Standard 213. Once the child has grown so the shoulder belt is no longer on or near the face and neck, use the shoulder belt without the booster seat.

⚠ WARNING

Never let a child stand or kneel on any seat and do not allow a child in the cargo areas while the vehicle is moving. The child could be seriously injured or killed in an accident or sudden stop.

PREGNANT WOMEN

NISSAN recommends that pregnant women use seat belts. The seat belt should be worn snug, and always position the lap belt as low as possible around the hips, not the waist. Place the shoulder belt over your shoulder and across your chest. Never run the lap/shoulder belt over your abdominal area. Contact your doctor for specific recommendations.

INJURED PERSONS

NISSAN recommends that injured persons use seat belts. Check with your doctor for specific recommendations.

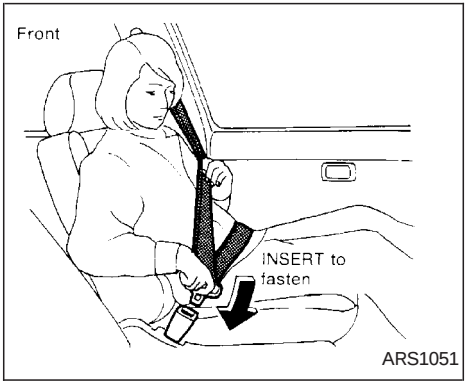

THREE-POINT TYPE SEAT BELT WITH RETRACTOR

⚠ WARNING

- **Every person who drives or rides in this vehicle should wear a seat belt at all times.**
- **Do not ride in a moving vehicle when the seatback is reclined. This can be dangerous. The shoulder belt will not be against your body. In an accident you could be thrown into it and receive neck or other serious injuries. You could also slide under the lap belt and receive serious internal injuries.**
- **For most effective protection when the vehicle is in motion, the seat should be upright. Always sit well back in the seat and adjust the seat properly. See "Precautions on seat belt usage" earlier in this section.**

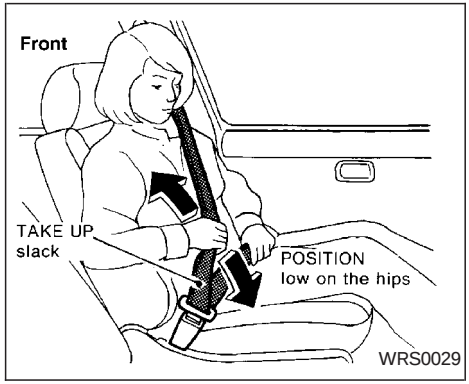

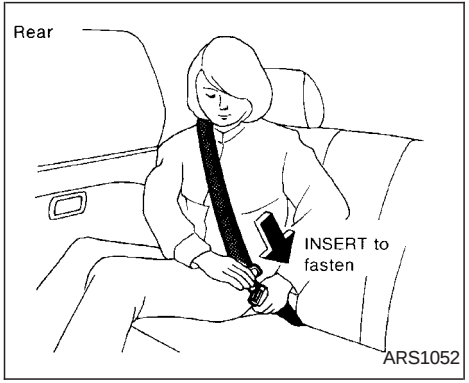

Fastening the seat belts

1. Adjust the seat.
2. Slowly pull the seat belt out of the retractor and insert the tongue into the buckle until you hear and feel the latch engage.

The retractor is designed to lock during a sudden stop or on impact. A slow pulling motion permits the belt to move, and allows you some freedom of movement in the seat.

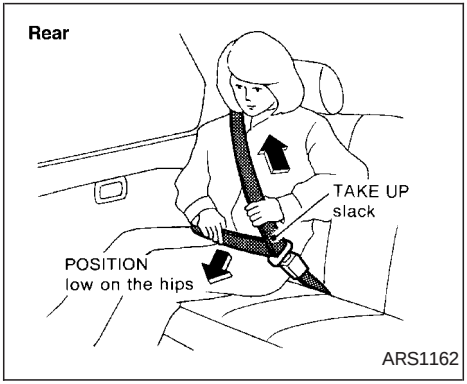

3. Position the lap belt portion **low and snug on the hips** as shown.
4. Pull the shoulder belt portion toward the retractor to take up extra slack.

The front passenger seat belt and the rear three-point seat belts have a cinching mechanism for child restraint installation. It is referred to as the automatic locking mode.

When automatic locking mode is activated, the seat belt cannot be withdrawn again until the seat belt tongue is detached from the buckle and fully retracted. Once retracted, the seat belt is in the emergency locking mode. For additional information, see ‘‘Child restraints’’ later in this section.

The automatic locking mode should be used only for child restraint installation. During normal seat belt use by a passenger, the automatic locking mode should not be activated. If it is activated it may cause uncomfortable seat belt tension.

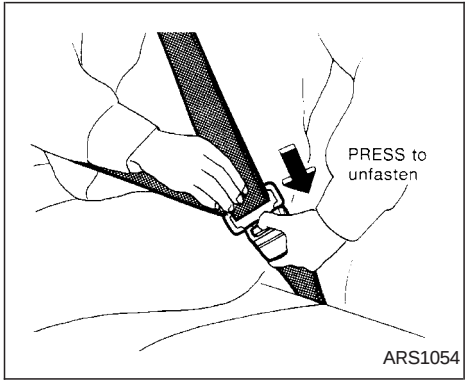

Unfastening the seat belts

To unfasten the seat belt, press the button on the buckle. The seat belt automatically retracts.

Checking seat belt operation

Your seat belt retractors are designed to lock seat belt movement by two separate methods:

1) When the seat belt is pulled quickly from the retractor.

2) When the vehicle slows down rapidly.

To increase your confidence in the seat belts, check the operation as follows.

- Grasp the shoulder belt and pull forward quickly. The retractor should lock and restrict further belt movement.

If the retractor does not lock during this check or if you have any question about belt operation, see an authorized NISSAN dealer.

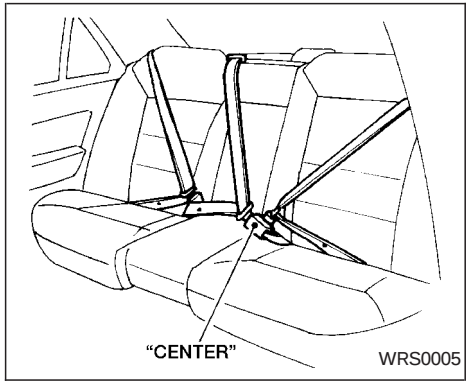

Center of rear seat

Selecting correct set of seat belts:

The center seat belt buckle is identified by the word ''CENTER.'' The center seat belt tongue can be fastened **only** into the center seat belt buckle.

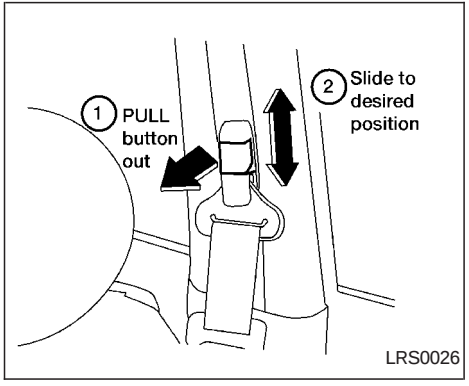

Shoulder belt height adjustment (For front seats)

The shoulder belt anchor height should be adjusted to the position best for you. (See ''Precautions on seat belt usage'' earlier in this section.) To adjust, pull out the adjustment button and move the shoulder belt anchor to the desired position, so the belt passes over the center of the shoulder. The belt should be away from your face and neck, but not falling off your shoulder. Release the adjustment button to lock the shoulder belt anchor into position.

⚠ WARNING

- **After adjustment, release the adjustment button and try to move the shoulder belt anchor up and down to make sure it is securely fixed in position.**
- **The shoulder belt anchor height should be adjusted to the position best for you. Failure to do so may reduce the effectiveness of the entire restraint system and increase the chance or severity of injury in an accident.**

SEAT BELT EXTENDERS

If, because of body size or driving position, it is not possible to properly fit the lap-shoulder belt and fasten it, an extender is available which is compatible with the installed seat belts. The extender adds approximately 8 inches (200 mm) of length and may be used for either the driver or front passenger seating position. See an authorized NISSAN dealer for assistance if the extender is required.

⚠ WARNING

- **Only NISSAN seat belt extenders, made by the same company which made the original equipment seat belts, should be used with NISSAN seat belts.**
- **Adults and children who can use the standard seat belt should not use an extender. Such unnecessary use could result in serious personal injury in the event of an accident.**

  Never use seat belt extenders to install child restraints. If the child restraint is not serviced properly, the child could be seriously injured in a collision or sudden stop.

SEAT BELT MAINTENANCE

- **To clean the seat belt webbings,** apply a mild soap solution or any solution recommended for cleaning upholstery or carpet. Then wipe with a cloth and allow the seat belts to dry in the shade. Do not allow the seat belts to retract until they are completely dry.
- **If dirt builds up in the shoulder belt guide** of the seat belt anchors, the seat belts may retract slowly. Wipe the shoulder belt guide with a clean, dry cloth.
- **Periodically check to see that the seat belt and metal components,** such as buckles, tongues, retractors, flexible wires and anchors, work properly. If loose parts, deterioration, cuts or other damage on the webbing is found, the entire seat belt assembly should be replaced.

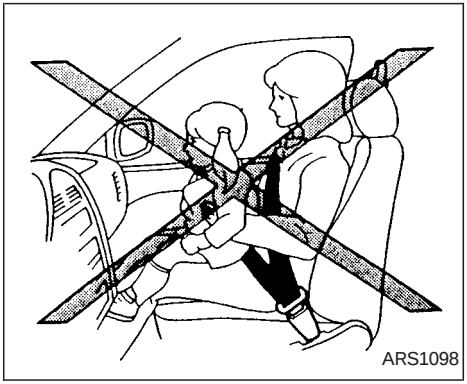

PRECAUTIONS ON CHILD RESTRAINTS

WARNING

- **Infants and small children should always be placed in an appropriate child restraint while riding in the vehicle. Failure to use a child restraint can result in serious injury or death.**
- **Infants and small children should never be carried on your lap. It is not possible for even the strongest adult to resist the forces of a severe accident. The child could be crushed between the adult and parts of the vehicle. Also, do not put the same seat belt around both your child and yourself.**
- **Never install a rear-facing child restraint in the front seat. An inflating supplemental front air bag could seriously injure or kill your child. A rear-facing child restraint must only be used in the rear seat.**
- **NISSAN recommends that the child restraint be installed in the rear seat. According to accident statistics, children are safer when properly restrained in the rear seat than in the front seat.**
- **An improperly installed child restraint could lead to serious injury or death in an accident.**

In general, child restraints are designed to be installed with a lap belt or the lap portion of a three-point type seat belt. In addition, this vehicle is equipped with a universal child restraint lower anchor system, referred to as the LATCH (Lower Anchors and Tether for Children) system. Some child restraints include two rigid or webbing-mounted attachments that can be connected to these lower anchors. For details, see the “LATCH (Lower Anchors and Tether for Children) system” later in this section.

Child restraints for infants and children of various sizes are offered by several manufacturers. When selecting any child restraint, keep the following points in mind:

1) Choose only a restraint with a label certifying that it complies with Federal Motor Vehicle Safety Standard 213 or Canadian Motor Vehicle Safety Standard 213.
2) Check the child restraint in your vehicle to be sure it is compatible with the vehicle’s seat and seat belt system.
3) If the child restraint is compatible with your vehicle, place your child in the child restraint and check the various adjustments to be sure the child restraint is compatible with your child. Always follow all recommended procedures.

All U.S. states and Canadian provinces or territories require that infants and small children be restrained in approved child restraints at all times while the vehicle is being operated.

WARNING

- **Improper use of a child restraint can result in increased injuries for both the infant or child and other occupants in the vehicle.**
- **Follow all of the child restraint manufacturer's instructions for installation and use. When purchasing a child restraint, be sure to select one which will fit your child and vehicle. It may not be possible to properly install some types of child restraints in your vehicle.**
- **If the child restraint is not anchored properly, the risk of a child being injured in a collision or a sudden stop greatly increases.**
- **Adjustable seatbacks should be positioned to fit the child restraint, but as upright as possible.**
- **After attaching the child restraint, test it before you place the child in it. Tilt it from side to side. Try to tug it forward and check to see if the belt holds the restraint in place. If the restraint is not secure, tighten the belt as necessary, or put the restraint in another seat and test it again.**
- **For a front-facing child restraint, if the seat position where it is installed has a three-point type lap/shoulder belt, check to make sure the shoulder belt does not go in front of the child's face or neck. If it does, put the shoulder belt behind the child restraint. If you must install a front-facing child restraint in the front seat, see ''Installation on front passenger seat'' later in this section for details.**
- **When your child restraint is not in use, keep it secured with a seat belt to prevent it from being thrown around in case of a sudden stop or accident.**

CAUTION

Remember that a child restraint left in a closed vehicle can become very hot. Check the seating surface and buckles before placing your child in the child restraint.

INSTALLATION ON REAR SEAT CENTER OR OUTBOARD POSITIONS

WARNING

- **The three-point belt in your vehicle is equipped with a locking mode retractor which must be used when installing a child restraint.**

- **Failure to use the retractor's locking mode will result in the child restraint not being properly secured. The restraint could tip over or otherwise be unsecured and cause injury to the child in a sudden stop or collision.**

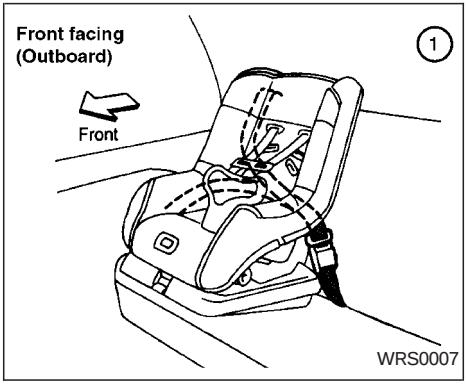

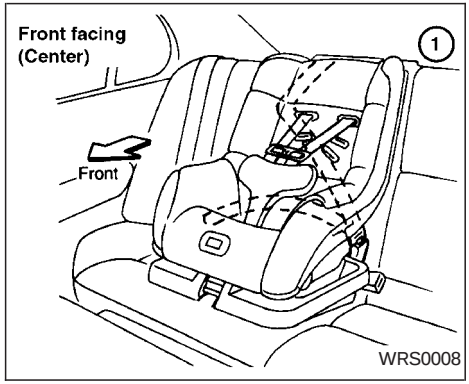

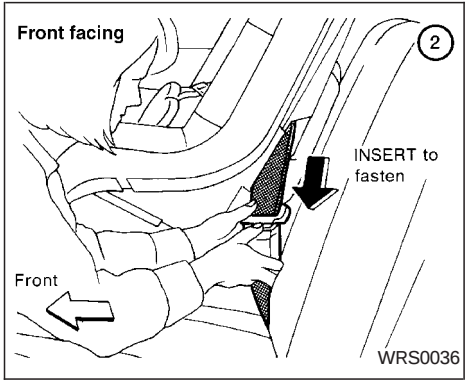

Front facing

When you install a child restraint in the rear seat, follow these steps:

1. Position the child restraint on the seat. It can be placed in a front facing direction, depending on the size of the child. Always follow the restraint manufacturer's instructions.
2. Route the seat belt tongue through the child restraint and insert it into the buckle until you hear and feel the latch engage.

   Be sure to follow the child restraint manufacturer's instructions for belt routing.

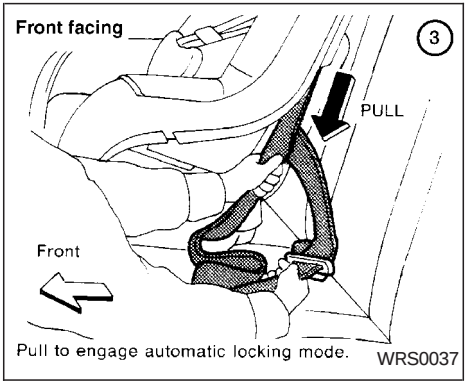

3. Pull on the shoulder belt until all of the belt is fully extended. At this time, the seat belt retractor is in the automatic locking mode (child restraint mode). It reverts back to emergency locking mode when the seat belt is fully retracted.

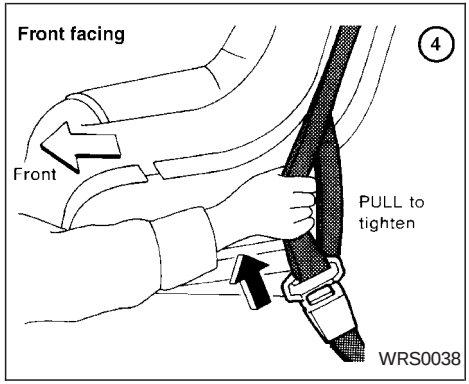

4. Allow the seat belt to retract. Pull up on the seat belt to remove any slack in the belt.

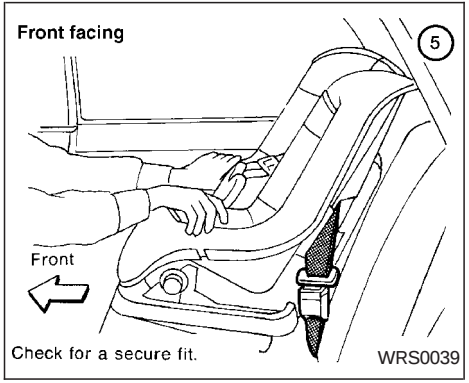

5. Before placing the child in the child restraint, use force to tilt the child restraint from side to side, and tug it forward to make sure that it is securely held in place.
6. Check that the retractor is in the automatic locking mode by trying to pull more seat belt out of the retractor. If you cannot pull any more belt webbing out of the retractor, the seat belt is in the automatic locking mode.
7. Check to make sure that the child restraint is properly secured prior to each

use. If the belt is not locked, repeat steps three through six.

After the child restraint is removed and the seat belt is allowed to wind back into the retractor, the automatic locking mode (child restraint mode) is canceled.

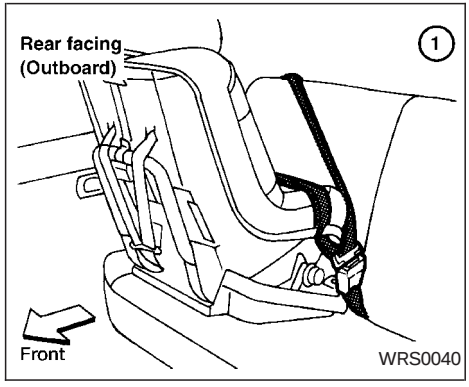

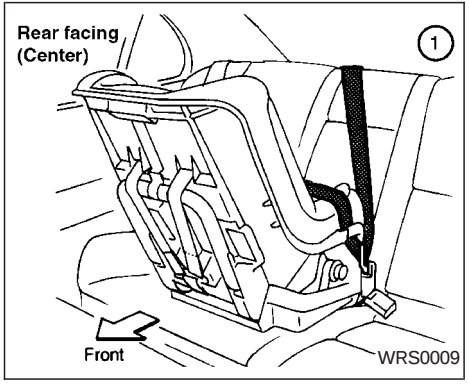

Rear facing

When you install a child restraint in the rear seat, follow these steps:

1. Position the child restraint on the seat. The direction of the child restraint depends on the type of the child restraint and the size of the child. Always follow the restraint manufacturer's instructions.

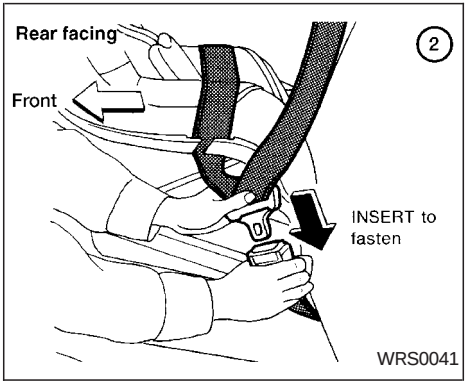

2. Route the seat belt tongue through the child restraint and insert it into the buckle until you hear and feel the latch engage.

   Be sure to follow the child restraint manufacturer's instructions for belt routing.

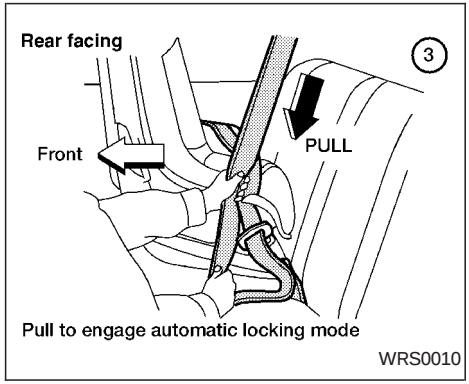

3. Pull on the shoulder belt until all of the belt is fully extended. At this time, the seat belt retractor is in the automatic locking mode (child restraint mode). It reverts back to emergency locking mode when the seat belt is fully retracted.

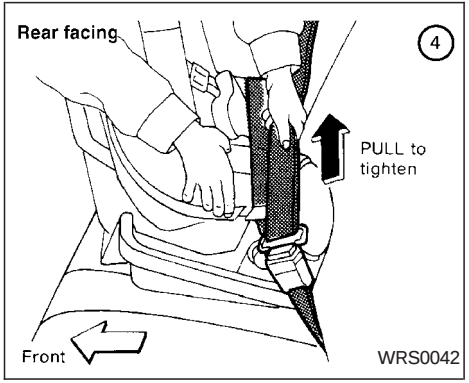

4. Allow the seat belt to retract. Pull up on the seat belt to remove any slack in the belt.

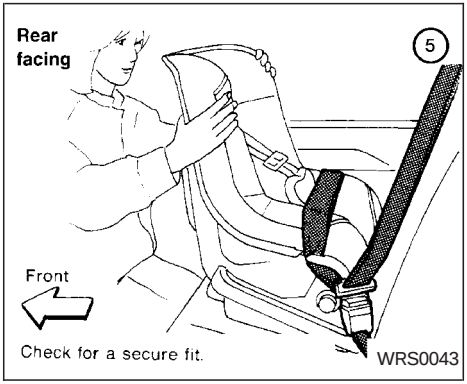

5. Before placing the child in the child restraint, use force to tilt the child restraint from side to side, and tug it forward to make sure that it is securely held in place.
6. Check that the retractor is in the automatic locking mode by trying to pull more seat belt out of the retractor. If you cannot pull any more belt webbing out of the retractor, the seat belt is in the automatic locking mode.
7. Check to make sure that the child restraint is properly secured prior to each use. If the belt is not locked, repeat steps three through six.

After the child restraint is removed and the seat belt is allowed to wind back into the retractor, the automatic locking mode (child restraint mode) is canceled.

LATCH (LOWER ANCHORS AND TETHER FOR CHILDREN) SYSTEM

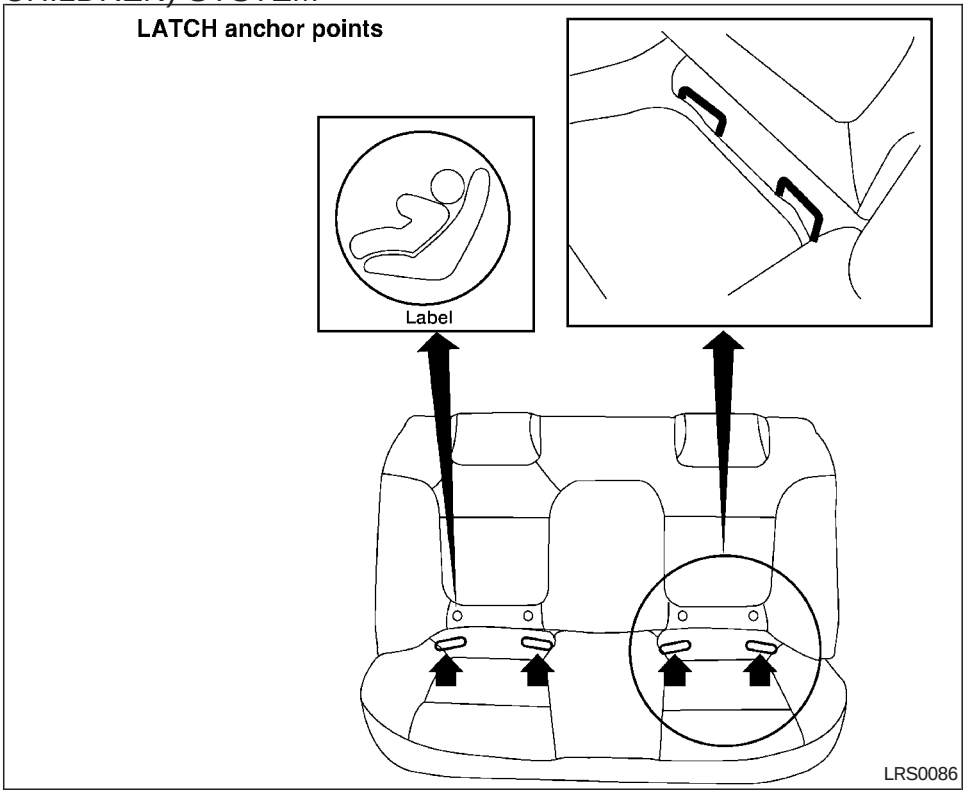

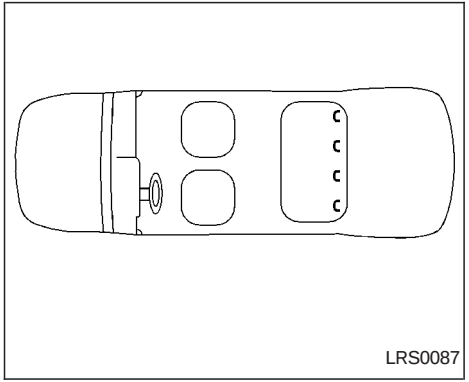

WARNING!

- **Attach LATCH system compatible child restraints only at the locations shown. If a child restraint is not secured properly, your child could be seriously injured or killed in an accident.**
- **Do not secure a child restraint in the center rear seating position using the LATCH system anchors. The child restraint will not be secured properly.**

- **The LATCH system anchors are designed to withstand only those loads imposed by correctly fitted child restraints. Under no circumstance are they to be used for adult seat belts or harnesses.**

Some child restraints include two rigid or webbing-mounted attachments that can be connected to two anchors located at certain seating positions in your vehicle. This system is known as the LATCH (Lower Anchors and Tether for Children) system. This system may also be referred to as the ISOFIX or ISOFIX compatible system. With this system, you do not have to use a vehicle seat belt to secure the child restraint. Your vehicle is equipped with special anchor points that are used with LATCH system compatible child restraints. Check your child restraint for a label stating that it is compatible with the LATCH system. This information may also be in the child restraint owner's manual. If you have such a child restraint, refer to the illustration for the rear seating positions equipped with LATCH system anchors which can be used to secure the child restraint.

The LATCH system anchors are located at the rear of the seat cushion near the seatback. A label is attached to the seat back to help you locate the LATCH system anchors.

Some child restraints may also require the use of a top tether strap. See ''Top Tether Strap Child Restraint'' later in this section for installation instructions.

When installing a child restraint, carefully read and follow the instructions in this manual and those supplied with the child restraint.

When you install a LATCH system compatible child restraint to the lower anchor attachments in the rear seat, follow these steps:

WARNING

Inspect the lower anchors by inserting your fingers into the lower anchor area and feeling to make sure there are no obstructions over the LATCH system anchors, such as seat belt webbing or seat cushion material. The child restraint will not be secured properly if the LATCH system anchors are obstructed.

1. To install the LATCH system compatible child restraint, insert the child restraint LATCH system anchor attachments into the anchor points on the rear seat. If the child restraint is equipped with a top tether, see ''Top Tether Strap Child Restraint'' later in this section for installation instructions.
2. After attaching the child restraint and before placing the child in it, use force to tilt the child restraint from side to side and tug it forward to make sure that the child restraint is securely held in place.
3. Check to make sure that the child restraint is properly secured prior to each use.

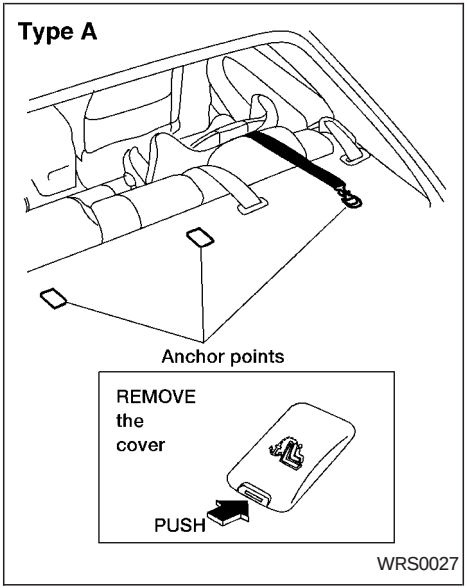

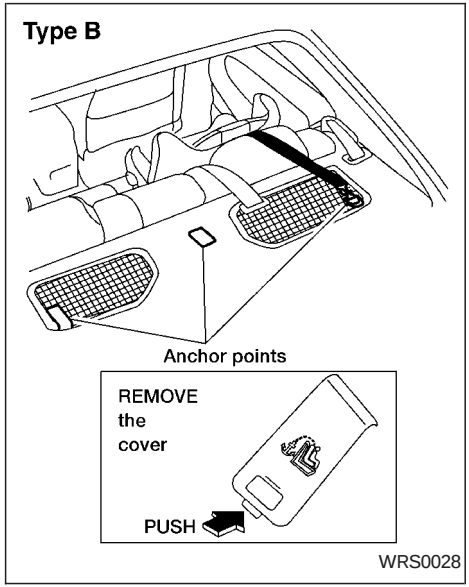

TOP TETHER STRAP CHILD RESTRAINT

If your child restraint has a top tether strap, it must be secured to the provided anchor point. First, secure the child restraint with the rear seat belt.

Remove the anchor cover from the anchor point which is located directly behind the child seat.

Secure the top tether strap to the anchor bracket. Tighten the strap according to manufacturer instructions to remove any slack.

⚠ WARNING

Child restraint anchor points are designed to withstand only those loads imposed by correctly fitted child restraints. Under no circumstances are they to be used for adult seat belts or harnesses.

Anchor point locations

Anchor points are located on the rear parcel shelf finisher.

If you have any questions when installing a top strap child restraint on the rear seat, consult your NISSAN dealer for details.

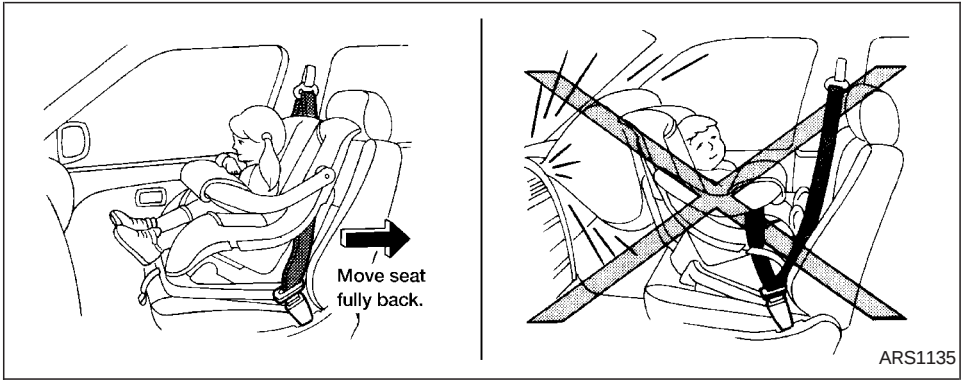

INSTALLATION ON FRONT PASSENGER SEAT

WARNING

- **Never install a rear-facing child restraint in the front passenger seat. Supplemental front air bags inflate with great force. A rear-facing child restraint could be struck by the supplemental front air bag in a crash and could seriously injure or kill your child.**
- **NISSAN recommends that child restraints be installed in the rear seat. However, if you must install a forward-facing child restraint in the front passenger seat, move the passenger seat to the rear most position.**
- **A child restraint with a top strap should not be used in the front passenger seat.**
- **The three-point seat belt in your vehicle is equipped with a locking mode retractor which must be used when installing a child restraint.**
- **Failure to use the retractor's locking mode will result in the child restraint not being properly secured. The restraint could tip over or otherwise be unsecured and cause injury to the child in a sudden stop or collision.**

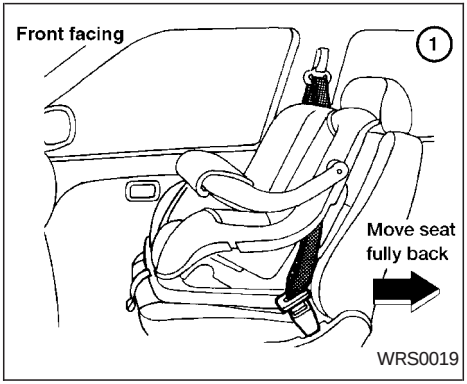

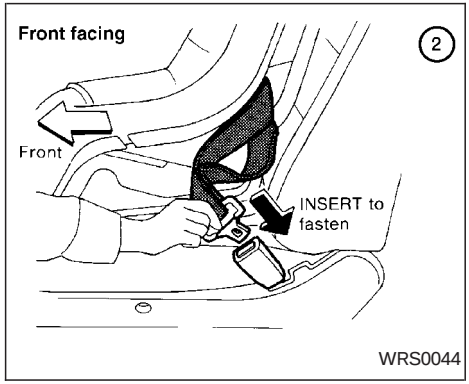

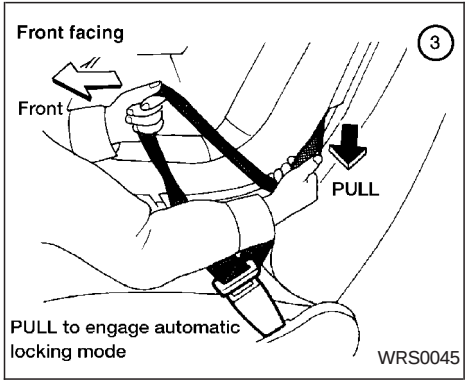

If you must install a child restraint in the front seat, follow these steps:

1. Position the child restraint on the front passenger seat. **It should be placed in a front facing direction only.** Move the seat to the rearmost position. Always follow the restraint manufacturer's instructions. **Child restraints for infants must be used in the rear facing direction and therefore must not be used in the front seat.**
2. Route the seat belt tongue through the child restraint and insert it into the buckle until you hear and feel the latch engage.

   Be sure to follow the child restraint manufacturer's instructions for belt routing.
3. Pull on the shoulder belt until all of the belt is fully extended. At this time, the seat belt retractor is in the automatic locking mode (child restraint mode). It reverts back to emergency locking mode when the seat belt is fully retracted.

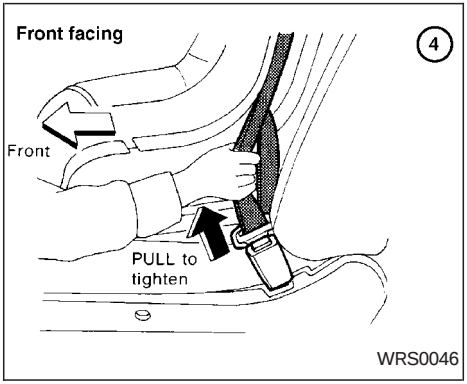

4. Allow the seat belt to retract slightly. Pull up on the seat belt to remove any slack in the belt.

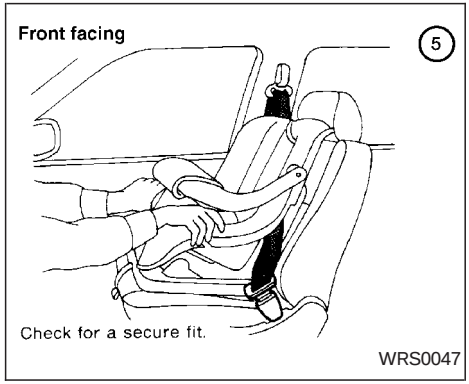

5. Before placing the child in the child restraint, use force to tilt the child restraint from side to side, and tug it forward to make sure it is securely held in place.
6. Check that the retractor is in the automatic locking mode by trying to pull more seat belt out of the retractor. If you cannot pull any more belt webbing out of the retractor, the seat belt is in the automatic locking mode.
7. Check to make sure the child restraint is properly secured prior to each use. If the lap belt is not locked, repeat steps three through six.

After the child restraint is removed and the seat belt is fully retracted, the automatic locking mode (child restraint mode) is canceled.

MEMO

2 Instruments and controls

Instrument panel 2-2
Meters and gauges 2-3
Speedometer and odometer 2-3
Tachometer (if so equipped) 2-4
Engine coolant temperature gauge 2-5
Fuel gauge 2-5
Warning/indicator lights and audible reminders.....2-7
Checking bulbs 2-7
Warning lights.....2-7
Indicator lights 2-9
Audible reminders.....2-11
Security systems 2-11
Nissan vehicle immobilizer system (NVIS) (if so equipped).....2-11
Vehicle security system (if so equipped) 2-12
Windshield wiper and washer switch 2-15
Switch operation 2-15
Rear window defogger switch 2-16
Headlight and turn signal switch 2-16
Headlight control switch 2-16
Turn signal switch.....2-17
Fog light switch (if so equipped) 2-18
Hazard warning flasher switch 2-18
Horn.....2-19
Power outlet 2-19
Cigarette lighter (accessory) and ashtray 2-20
Storage 2-21
Sunglasses case (if so equipped) 2-21
Cup holders 2-21
Glove box 2-22
Coin box 2-22
Console box (if so equipped) 2-23
Instrument panel storage (if so equipped).....2-23
Windows 2-24
Power windows (if so equipped) 2-24
Manual windows 2-25
Sunroof (if so equipped).....2-26
Interior light.....2-27
Map lights (if so equipped).....2-27
Trunk light (if so equipped) 2-28

INSTRUMENT PANEL

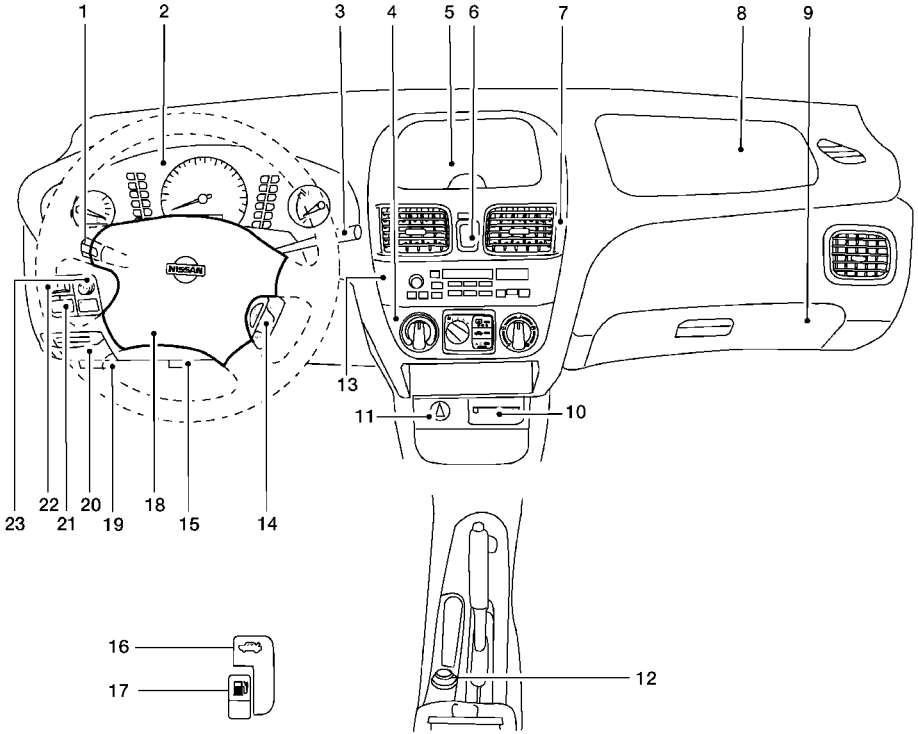

1. Headlight and turn signal switch
2. Meters/gauges
3. Windshield wiper/washer switch
4. Heater/air conditioner control
5. Storage compartment
6. Hazard warning flasher switch
7. Center ventilators
8. Passenger supplemental air bag
9. Glove box
10. Ashtray
11. 12 volt DC/cigarette lighter (accessory)
12. 12 volt DC/cigarette lighter (accessory) (if so equipped)
13. Radio/CD player/CD changer
14. Cruise control and main set switch
15. Tilt steering lock lever
16. Trunk release Type B
17. Fuel filler lid opening lever
18. Driver supplemental air bag
19. Hood release lever
20. Fuse box cover/coin holder
21. Trunk release Type A
22. Instrument brightness control switch
23. Outside mirror control switch

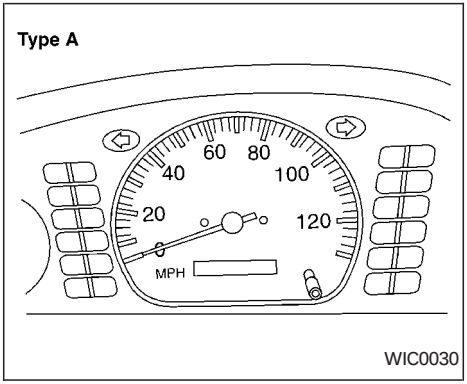

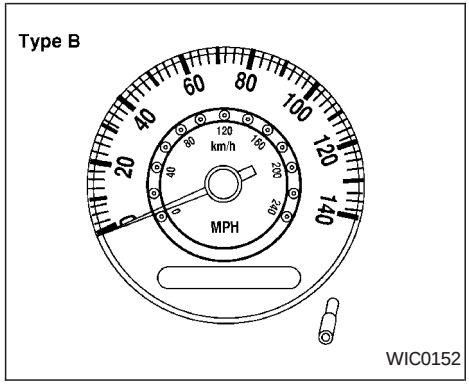

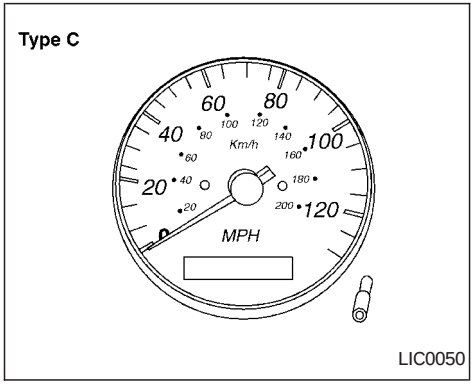

SPEEDOMETER AND ODOMETER

Speedometer

The speedometer indicates vehicle speed in miles per hour (MPH) and kilometers per hour (km/h).

Odometer

The odometer records the total distance the vehicle has been driven.

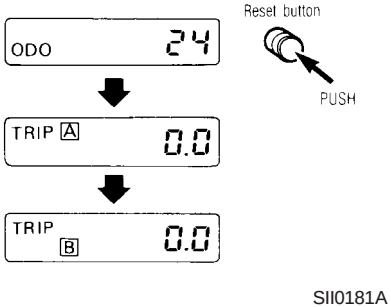

SII0181A

Trip odometer

The trip odometer records the distance of individual trips. Before each trip reset the trip odometer.

Push the reset button to change the display as follows:

ODO (odometer)→TRIP A→TRIP B→ODO.

Push and hold the reset button for more than 1 second to reset either trip odometer.

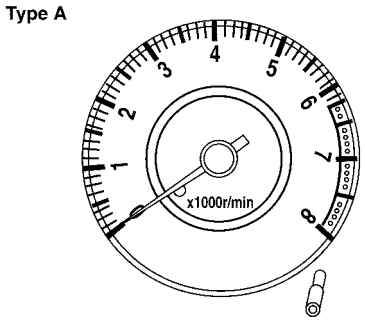

WIC0153

TACHOMETER (if so equipped)

The tachometer indicates engine speed in revolutions per minute (r/min).

⚠ CAUTION

When engine speed approaches the red zone, shift to a higher gear. Operating the engine in the red zone may cause serious engine damage.

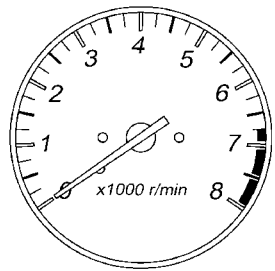

WIC0052

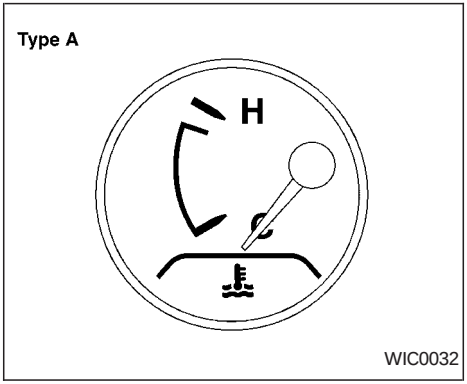

ENGINE COOLANT TEMPERATURE GAUGE

The gauge indicates the engine coolant temperature.

The engine coolant temperature varies with the outside air temperature and driving conditions.

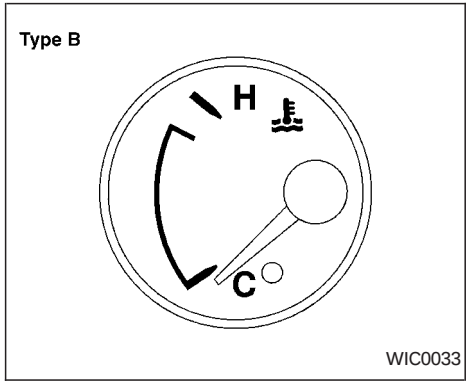

CAUTION

If the gauge indicates engine coolant temperature over the normal range, stop the vehicle as soon as safely possible. If the engine is overheated, continued operation of the vehicle may seriously damage the engine. See the ‘‘In case of emergency’’ section for immediate action required.

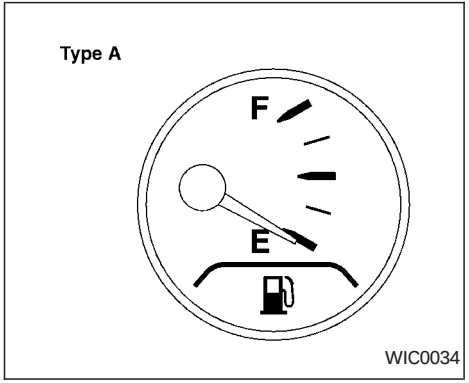

FUEL GAUGE

The gauge indicates the **approximate** fuel level in the tank.

The gauge may move slightly during braking, turning, acceleration, or going up or down hills.

The gauge needle returns to empty (E) after the ignition key is turned to OFF.

The low fuel warning light comes on when the amount of fuel in the tank is getting low.

Refill the fuel tank before the gauge registers E (Empty).

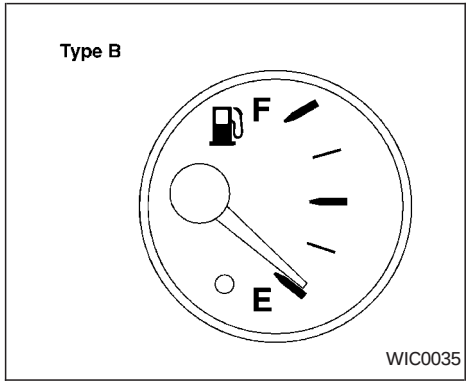

CAUTION

- **If the vehicle runs out of fuel, the SERVICE ENGINE SOON malfunction indicator lamp (MIL) may come on. Refuel as soon as possible. After a few driving trips, the SERVICE ENGINE SOON lamp should turn off. If the lamp remains on after a few driving trips, have the vehicle inspected by an authorized NISSAN dealer.**
- **For additional information, see the ‘‘Malfunction indicator lamp (MIL)’’ later in this section.**

WARNING/INDICATOR LIGHTS AND AUDIBLE REMINDERS

BRAKE or Brake warning light	Low washer fluid warning light (if so equipped)	CRUISE CRUISE main switch indicator light (if so equipped)
Turn signal/hazard indicator lights	ABS or Anti-lock brake warning light (if so equipped)	SET Cruise SET switch indicator light (if so equipped)
High beam indicator light (Blue)	O/D OFF Overdrive off indicator light (automatic transmission only)	Supplemental air bag warning light
Charge warning light	SERVICE ENGINE SOON Malfunction indicator lamp	Seat belt warning light and chime
Door open warning light	Engine oil pressure warning light	Low fuel warning light

CHECKING BULBS

With all doors closed, apply the parking brake and turn the ignition key to the ON position without starting the engine. The following lights will come on:

, , BRAKE or , , SERVICE ENGINE SOON,

If equipped, the following lights come on briefly and then go off:

ABS or

If any light fails to come on, it may indicate a burned-out bulb or an open circuit in the electrical system. Have the system repaired promptly.

WARNING LIGHTS

ABS or Anti-lock brake warning light (if so equipped)

If the light comes on while the engine is running, it may indicate the anti-lock brake system is not functioning properly. Have the system checked by an authorized NISSAN dealer.

Turn off the engine, and start it again by slowly turning the ignition key (quickly doing so may cause the ABS light to stay on when there is nothing wrong). If the light stays on, have the system checked by an authorized NISSAN dealer.

If an abnormality occurs in the system, the anti-lock function ceases, but the regular braking system continues to operate.

If the light comes on while you are driving, contact an authorized NISSAN dealer for repair.

BRAKE or (!) Brake warning light

This light functions for both the parking brake and the foot brake systems.

When the ignition key is in the ON position, the light comes on when the parking brake is applied, and also warns of a low brake fluid level. If the light comes on while the engine is running with the parking brake not applied, stop the vehicle and perform the following:

1. Check the brake fluid level. Add brake fluid as necessary. See ‘‘Brake fluid’’ in the ‘‘Maintenance and do-it-yourself’’ section of this manual.
2. If the brake fluid level is correct, have the warning system checked by an authorized NISSAN dealer.

⚠ WARNING

- **If the level is below the MINIMUM or MIN mark on the brake fluid reservoir, do not drive until the brake system has been checked at an authorized NISSAN dealer.**
- **Your brake system may not be working properly if the warning light is on. Driving could be dangerous. If you judge it to be safe, drive carefully to the nearest service station for repairs. Otherwise, have your vehicle towed.**
- **Pressing the brake pedal with the engine stopped and/or a low brake fluid level may increase your stopping distance and braking will require greater pedal effort as well as pedal travel.**

Charge warning light

If the light comes on while the engine is running, it may indicate the charging system is not functioning properly. Turn the engine off and check the generator belt. If the belt is loose, broken, or missing, or if the light remains on, see an authorized NISSAN dealer immediately.

⚠ CAUTION

Do not continue driving if the generator belt is loose, broken or missing.

Door open warning light

This light comes on when any of the doors are not closed securely while the ignition key is ON.

Engine oil pressure warning light

This light warns of low engine oil pressure. If the light flickers or comes on during normal driving, pull off the road in a safe area, stop the engine **immediately** and call an authorized NISSAN dealer.

The engine oil pressure warning light is not designed to indicate a low oil level. Use the dipstick to check the oil level. See ‘‘Engine oil’’ in the ‘‘Maintenance and do-it-yourself’’ section of this manual.

⚠ CAUTION

Running the engine with the engine oil pressure warning light on could cause serious damage to the engine almost immediately. Such damage is not covered by warranty. Turn off the engine as soon as it is safe to do so.

Low fuel warning light

This warning light comes on when the fuel in the tank is getting low. Refuel as soon as it is convenient, preferably before the fuel gauge reaches E (Empty).

There will be a small reserve of fuel remaining in the tank when the fuel gauge reaches E (Empty).

Low washer fluid warning light (if so equipped)

This light comes on when the washer fluid is at a low level. Add washer fluid as necessary. See the ‘‘Maintenance and do-it-yourself’’ section of this manual.

Seat belt warning light and chime

The light and chime remind you to fasten your seat belts. The light illuminates whenever the ignition key is turned to ON or START and the light remains illuminated until the driver’s seat belt is fastened.

Refer to “Seat belts” in the “Seats, restraints and supplemental air bag systems” section for precautions on seat belt usage.

Supplemental air bag warning light

When the ignition key is in the ON or START position, the supplemental air bag warning light illuminates for about 7 seconds and then turns off. This means the supplemental front air bag, supplemental side air bag and pre-tensioner seat belt systems are operational.

If any of the following conditions occur, the supplemental front air bag, supplemental side air bag or pre-tensioner seat belt systems need servicing and your vehicle must be taken to an authorized NISSAN dealer:

- The supplemental air bag warning light remains on after approximately 7 seconds.
- The supplemental air bag warning light flashes intermittently.
- The supplemental air bag warning light does not come on at all.

Unless checked and repaired, the supplemental restraint system (air bag system) and/or the pre-tensioner seat belts may not function properly. For additional details see ‘‘Supplemental restraint system’’ in the ‘‘Seats, restraints and supplemental air bag systems’’ section of this manual.

⚠ WARNING

If the supplemental air bag warning light is on, it could mean that the supplemental front air bag or supplemental side air bag system (if so equipped) or pre-tensioner seat belt system will not operate in an accident.

INDICATOR LIGHTS

CRUISE Cruise main switch indicator light (if so equipped)

The light comes on when the cruise control main switch is pushed. The light goes out when the main switch is pushed again. When the cruise main switch indicator light comes on, the cruise control system is operational.

SET Cruise SET switch indicator light (if so equipped)

The light comes on while the vehicle speed is controlled by the cruise control system. If the light blinks while the engine is running, it may indicate the cruise control system is not

functioning properly. Have the system checked by your authorized NISSAN dealer.

High beam indicator light (Blue)

This blue light comes on when the headlight high beam is on and goes out when the low beam is selected.

The high beam indicator light also comes on when the passing signal is activated.

Malfunction indicator lamp (MIL)

If this indicator lamp comes on steady or blinks while the engine is running, it may indicate a potential emission control malfunction.

The malfunction indicator lamp may also come on steady if the fuel filler cap is loose or missing, or if the vehicle runs out of fuel. Check to make sure the fuel filler cap is installed and closed tightly, and that the vehicle has at least three gallons of fuel in the fuel tank.

After a few driving trips, the SERVICE ENGINE SOON lamp should turn off if no other potential emission control system malfunction exists.

Operation

The malfunction indicator lamp will come on in one of two ways:

- Malfunction indicator lamp on steady - An emission control system malfunction has been detected. Check the fuel filler cap. If the fuel filler cap is loose or missing, tighten or install the cap and continue to drive the vehicle. The SERVICE ENGINE SOON lamp should turn off after a few driving trips. If the SERVICE ENGINE SOON lamp does not turn off after a few driving trips, have the vehicle inspected by an authorized NISSAN dealer. You do not need to have your vehicle towed to the dealer.
- Malfunction indicator lamp blinking - An engine misfire has been detected which may damage the emission control system. To reduce or avoid emission control system damage:
  a) do not drive at speeds above 45 MPH (72 km/h).
  b) avoid hard acceleration or deceleration.
  c) avoid steep uphill grades.
  d) if possible, reduce the amount of cargo being hauled or towed.

The malfunction indicator lamp may stop blinking and come on steady. Have the vehicle inspected by an authorized NISSAN dealer. You do not need to have your vehicle towed to the dealer.

CAUTION

Continued vehicle operation without having the emission control system checked and repaired as necessary could lead to poor driveability, reduced fuel economy, and possible damage to the emission control system.

Overdrive off indicator light (automatic transmission only)

This light comes on when the overdrive switch is in the OFF position.

Turn signal/hazard indicator lights

The appropriate light flashes when the turn signal lever switch is activated.

Both lights flash when the hazard switch is turned on.

AUDIBLE REMINDERS

Key reminder chime

A chime sounds if the driver's side door is opened while the key is left in the ignition switch. Remove the key and take it with you when leaving the vehicle.

Light reminder chime

With the ignition switch in the OFF position, a chime sounds when the driver's side door is opened if the headlights or parking lights are on.

Turn the headlight control switch off before leaving the vehicle.

Brake pad wear warning

The disc brake pads have an audible wear warning. When a brake pad requires replacement, it makes a high pitched scraping sound when the vehicle is in motion, whether or not the brake pedal is depressed. Have the brakes checked as soon as possible if the warning sound is heard.

IC0005

Your vehicle has two types of security systems:

- Nissan Vehicle Immobilizer System–NVIS (if so equipped)
- Vehicle security system (if so equipped)

NISSAN VEHICLE IMMOBILIZER SYSTEM (NVIS) (if so equipped)

The Nissan Vehicle Immobilizer System (NVIS) will not allow the engine to start without the use of a registered NVIS key.

If the engine fails to start using a registered NVIS key (for example, when interference is caused by another NVIS key, an automated toll road device or automated payment device on the key ring), restart the engine using the following procedures:

1. Leave the ignition switch in the ON position for approximately 5 seconds.
2. Turn the ignition switch to the OFF or LOCK position, and wait approximately 5 seconds.
3. Repeat step 1 and 2.
4. Restart the engine while holding the device (which may have caused the interference) separate from the registered NVIS key.

If the no start condition re-occurs, Nissan recommends placing the registered NVIS key on a separate key ring to avoid interference from other devices.

Statement related to section 15 of FCC rules for Nissan Vehicle Immobilizer System (CONT ASSY - IMMOBILIZER, ANT ASSY - IMMOBILIZER)

This device complies with part 15 of the FCC Rules and RSS-210 of Industry Canada. Operation is subject to the following two conditions;

(1) This device may not cause harmful interference, and (2) this device must accept any interference received, including interference that may cause undesired operation of the device.

CHANGES OR MODIFICATIONS NOT EXPRESSLY APPROVED BY THE MANUFACTURER FOR COMPLIANCE COULD VOID THE USER'S AUTHORITY TO OPERATE THE EQUIPMENT.

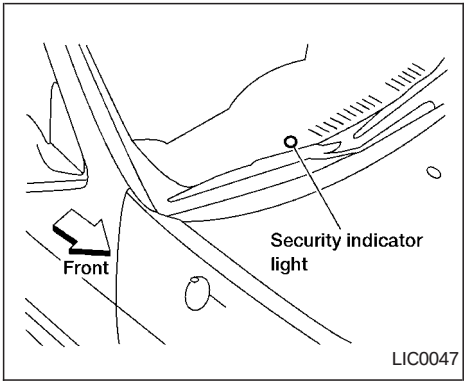

Security indicator light (Nissan Vehicle Immobilizer System)

The security indicator light is located on the instrument panel near the windshield.

The security indicator light blinks every 3 seconds whenever the ignition switch is in the LOCK, OFF or ACC position. This function indicates the Nissan Vehicle Immobilizer System (NVIS) is operational.

If the NVIS is malfunctioning, the light will remain on while the ignition key is in the ON position.

If the light still remains on and/or the engine will not start, see your Nissan dealer for NVIS service as soon as possible. Please bring all NVIS keys that you have when visiting your authorized NISSAN dealer for service.

VEHICLE SECURITY SYSTEM (if so equipped)

The vehicle security system provides visual and audio alarm signals if parts of the vehicle are disturbed.

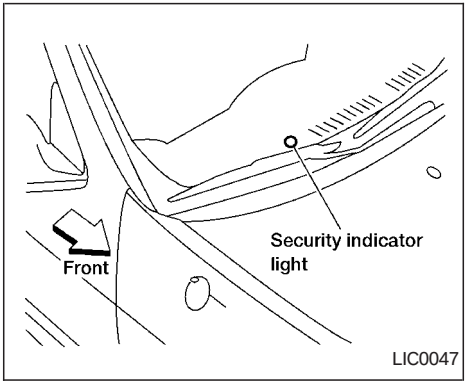

Security indicator light (Vehicle security system)

The security indicator light is located on the instrument panel near the windshield.

The security indicator light shows the status of the vehicle security system.

The light operates whenever the ignition switch is in the LOCK, OFF, or ACC position.

The vehicle security system has four phases. For each phase the operation of the security indicator light is different.

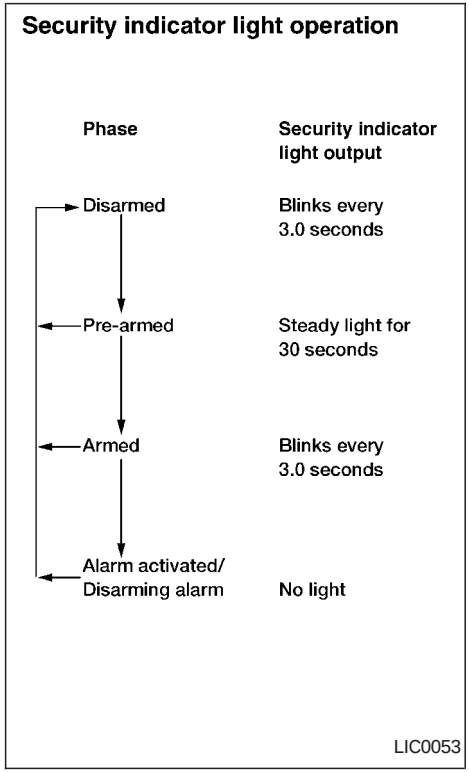

How to arm the vehicle security system

1. Close all windows. **(The system can be armed even if the windows are open).**
2. Remove the key from the ignition switch.
3. Close the hood, trunk lid and all doors. Lock all doors. The doors can be locked with the key or with the keyfob.

   Keyfob operation:

   - Push the LOCK button on the keyfob. All doors lock. The hazard lights flash twice and the horn beeps once to indicate all doors are locked.
   - When the LOCK button is pushed with all doors locked, the hazard lights flash twice and the horn beeps once as a reminder that the doors are already locked.
     The horn may or may not beep once. Refer to ‘‘Silencing the horn beep feature’’ later in this section.
4. Confirm that the SECURITY indicator light comes on. The SECURITY light stays on for about 30 seconds. The vehicle security system is now pre-armed. After about 30 seconds the vehicle security system auto-

matically shifts into the armed phase. The SECURITY light begins to flash once every three seconds. If, during the 30-second pre-arm time period, the door is unlocked by the key or the keyfob, or the ignition key is turned to ACC or ON, the system will not arm.

- **If the key is turned slowly when locking the door, the system may not arm. Furthermore, if the key is turned excessively to the unlock position, the system may be disarmed when the key is removed. If the indicator light fails to glow for 30 seconds, unlock the door once and lock it again.**
- **Even when the driver and/or passengers are in the vehicle, the system will arm with all doors, hood and trunk lid closed and locked with the ignition key in the OFF position.**

Vehicle security system activation

The vehicle security system will give the following alarm:

- The headlights blink and the horn sounds intermittently.
- The alarm automatically turns off after about 50 seconds. However, the alarm reactivates if the vehicle is tampered with again. The alarm can be shut off by unlocking a door or trunk lid with the key, or by pressing the UNLOCK button on the keyfob.

The alarm is activated by:

- opening the door or trunk lid without using the key or keyfob (even if the door is unlocked by releasing the door inside lock switch) or opening the trunk lid by operating the opener lever.
- opening the hood.

How to stop an activated alarm

The alarm stops only by unlocking a door or the trunk lid with the key, or by pressing the UNLOCK button on the keyfob.

The alarm does not stop if the ignition switch is turned to ACC or ON.

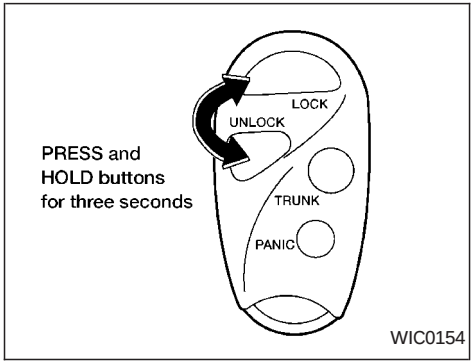

Silencing the horn beep feature

If desired, the horn beep feature can be deactivated using the keyfob. The instructions are on the back of the keyfob.

To deactivate: Press and hold the LOCK and UNLOCK buttons **for at least three seconds.**

The hazard lights will quickly flash three times to confirm that the horn beep feature has been deactivated.

To activate: Press and hold the LOCK and UNLOCK buttons **for at least three seconds once more.**

The hazard lights will flash once and the horn will sound once to confirm that the horn beep feature has been reactivated.

Deactivating the horn feature does not silence the horn if the alarm is triggered.

If the system does not operate as described above, have it checked by an authorized NISSAN dealer.

WINDSHIELD WIPER AND WASHER SWITCH

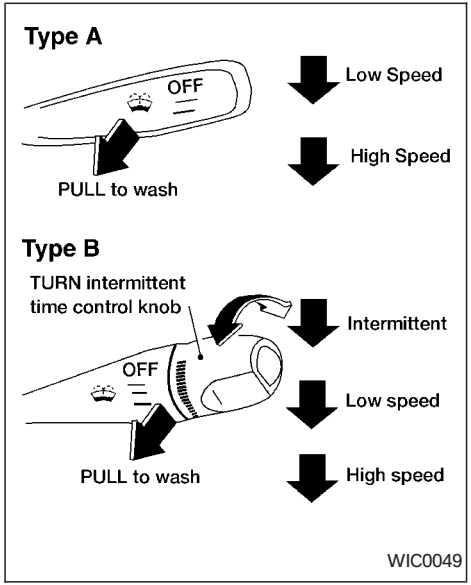

SWITCH OPERATION

Push the lever down to operate the wiper. Pull the lever toward you to operate the washer. The ignition switch must be in the ON position for the wipers or washer to be activated. Operating the washer automatically cycles the wipers three times.

⚠ CAUTION

- **Do not operate the washer continuously for more than 30 seconds.**
- **Do not operate the washer if the reservoir tank is empty.**

⚠ WARNING

In freezing temperatures the washer solution may freeze on the windshield and obscure your vision which may lead to an accident. Warm the windshield with the defroster before you wash the windshield.

REAR WINDOW DEFOGGER SWITCH

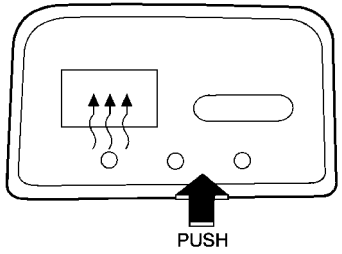

LIC0026

To defog the rear window glass, start the engine and push the rear window defogger switch on. (The indicator light on the switch comes on.) Push the switch again to turn the defogger off.

The rear window defogger switch automatically turns off after approximately 15 minutes.

⚠ CAUTION

When cleaning the inner side of the rear window, be careful not to scratch or damage the rear window defogger.

HEADLIGHT AND TURN SIGNAL SWITCH

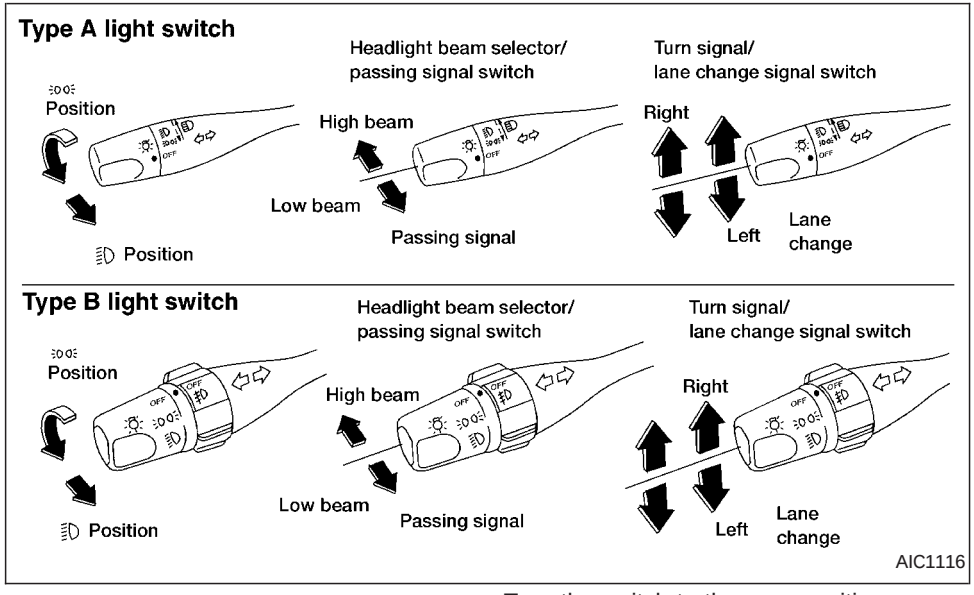

AIC1116

HEADLIGHT CONTROL SWITCH

Lighting

Turn the switch to the position:

The front parking, tail, license plate and instrument panel lights come on.

Turn the switch to the position:

The headlights come on and all the other lights remain on.

To select the high beam function, push the lever forward. The high beam lights come on and the light illuminates. Pull the lever back to select the low beam.

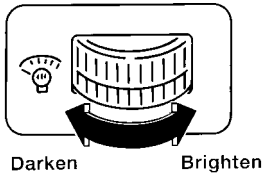

AIC0608

Instrument brightness control

The instrument brightness control operates when the headlight switch is in the ≡DC≡ or ≡D position.

Turn the control to adjust the brightness of instrument panel lights.

Passing signal

Pulling and releasing the lever flashes the headlight high beams on and off.

Daytime running light system (Canada only)

The headlights automatically illuminate at a reduced intensity when the engine is started with the parking brake released. The daytime running lights operate with the headlight switch in the OFF position or in the ≡DC≡ position. Turn the headlight switch to the ≡D position for full illumination when driving at night.

If the parking brake is applied before the engine is started, the daytime running lights do not illuminate. The daytime running lights illuminate once the parking brake is released. The daytime running lights will remain on until the ignition switch is turned off.

⚠ WARNING

When the daytime running light system is active, tail lights on your vehicle are not on. It is necessary at dusk to turn on your headlights. Failure to do so could cause an accident injuring yourself and others.

TURN SIGNAL SWITCH

Turn signal

Move the lever up or down to signal the turning direction. When the turn is completed, the turn signals cancel automatically.

Lane change signal

To signal a lane change, move the lever up or down to the point where the indicator light begins to flash, but the lever does not latch.

FOG LIGHT SWITCH (if so equipped)

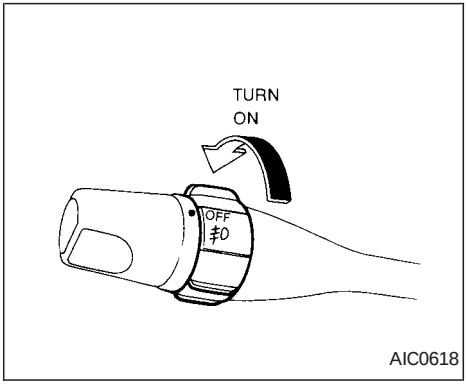

AIC0618

To turn the front fog lights on, rotate the switch to the position.

To turn them off, rotate the switch to the OFF position.

The headlight switch must be in the position (low beam headlights on) for the fog lights to operate. The fog lights automatically turn off whenever the high-beam headlight function is selected.

HAZARD WARNING FLASHER SWITCH

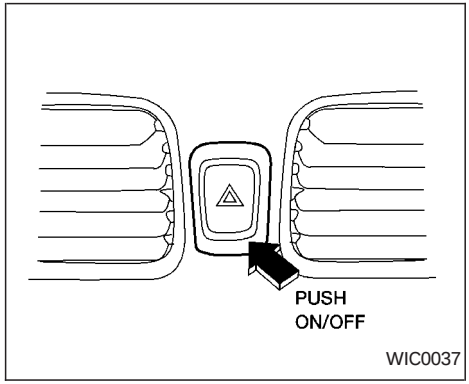

WIC0037

Push the switch on to warn other drivers when you must stop or park under emergency conditions. All turn signal lights flash.

WARNING

- **If stopping for an emergency, be sure to move the vehicle well off the road.**
- **Do not use the hazard warning flashers while moving on the highway unless unusual circumstances force you to drive so slowly that your vehicle might become a hazard to other traffic.**
- **Turn signals do not work when the hazard warning flasher lights are on.**

The flashers can be actuated with the ignition switch in either the OFF or ON position.

Some state laws may prohibit the use of the hazard warning flasher switch while driving.

HORN

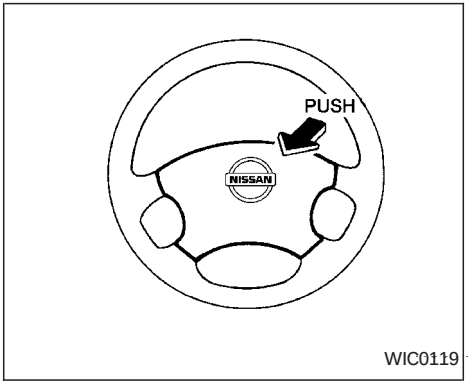

To sound the horn, push the center pad area of the steering wheel.

⚠ WARNING

Do not disassemble the horn. Doing so could affect proper operation of the supplemental front air bag system. Tampering with the supplemental front air bag system may result in serious personal injury.

POWER OUTLET

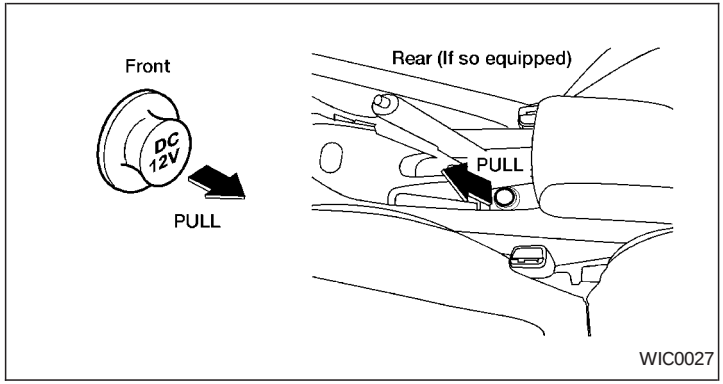

The power outlet is for powering electrical accessories such as cellular telephones.

⚠ CAUTION

- **Take care as the outlet and plug may be hot during or immediately after use.**
- **This power outlet is not designed for use with a cigarette lighter unit.**
- **Do not use with accessories that exceed a 12 volt, 120W (10A) power draw. Do not use double adapters or more than one electrical accessory.**
- **Use this power outlet with the engine running. (If the engine is stopped, this could result in a discharged battery.)**
- **Avoid using when the air conditioner, headlights or rear window defogger is on.**
- **Before inserting or disconnecting a plug, be sure the electrical accessory being used is turned OFF.**

- **Push the plug in as far as it will go. If good contact is not made, the plug may overheat or the internal temperature fuse may blow.**
- **When not in use, be sure to close the cap. Do not allow water to contact the outlet.**

CIGARETTE LIGHTER (accessory) AND ASHTRAY

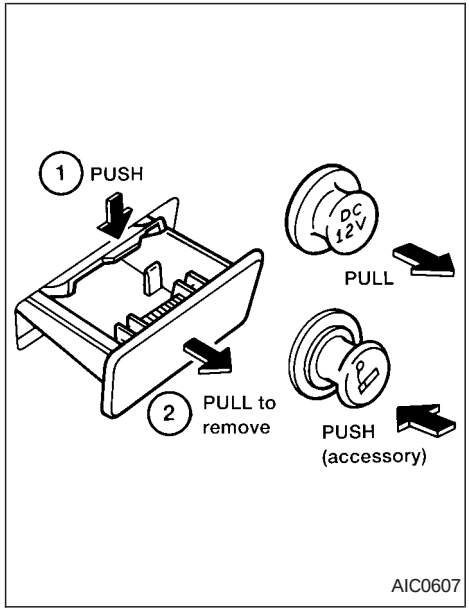

The cigarette lighter element is an accessory. A genuine NISSAN cigarette lighter can be purchased from an authorized NISSAN dealer.

The cigarette lighter operates when the ignition switch is in the ACC or ON position.

Push the lighter in all the way. When the lighter is heated, it springs out.

Return the lighter to its original position after use.

⚠ WARNING

The cigarette lighter should not be used while driving so full attention may be given to vehicle operation.

⚠ CAUTION

The cigarette lighter socket is a power source for the cigarette lighter element only. The use of the cigarette lighter socket as a power source for any other accessory is not recommended.

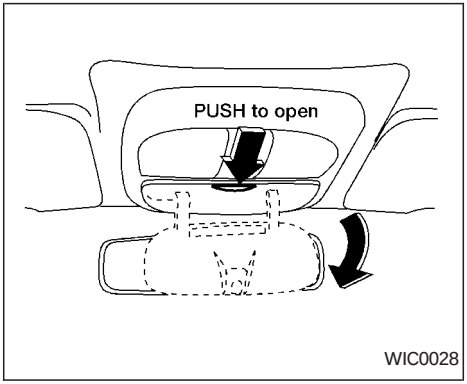

SUNGLASSES CASE (if so equipped)

To open the sunglasses case, push and release.

WARNING

The sunglasses case should not be used while driving so full attention may be given to vehicle operation.

CAUTION

- **Do not use for anything other than sunglasses.**
- **Do not leave sunglasses in the sunglasses case while parking in direct sunlight. The heat may damage the sunglasses.**

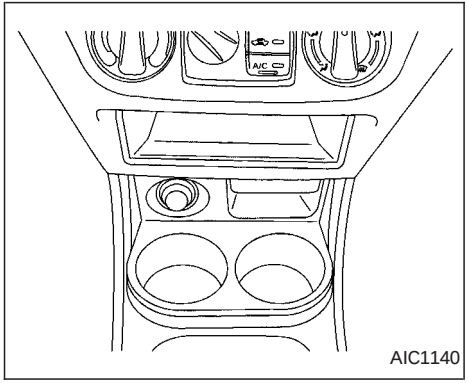

CUP HOLDERS

Front

The right side cup holder and ashtray cannot be used at the same time. Close the ashtray before using the cup holder.

WARNING

The cup holder should not be used while driving so full attention may be given to vehicle operation.

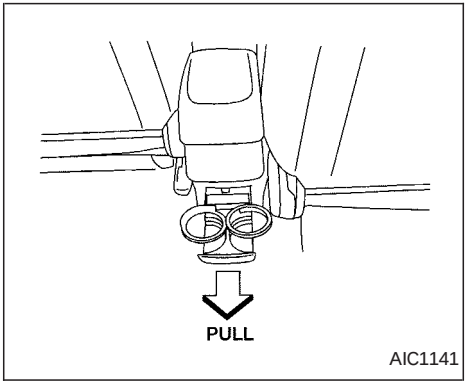

Rear (if so equipped)

To open, pull the cup holder out fully. To close, push the cup holder in fully.

⚠ CAUTION

- **Avoid abrupt starting and braking when the cup holder is being used to prevent spilling the drink. If the liquid is hot, it can scald you or your passenger.**
- **Use only soft cups in the cup holder. Hard objects can injure you in an accident.**

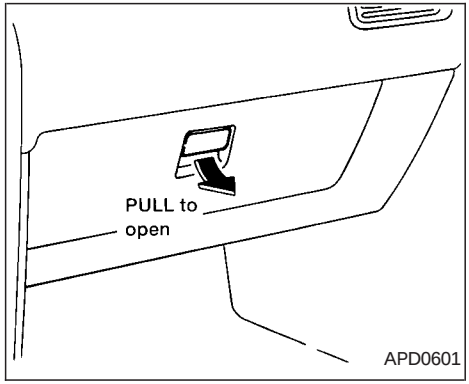

GLOVE BOX

Open the glove box by pulling the handle.

⚠ WARNING

Keep glove box lid closed while driving to help prevent injury in an accident or a sudden stop.

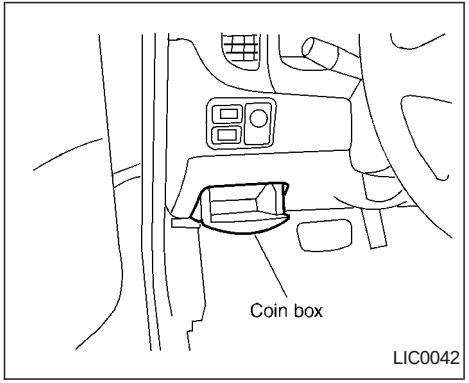

COIN BOX

⚠ WARNING

The coin box should not be used while driving so full attention may be given to vehicle operation.

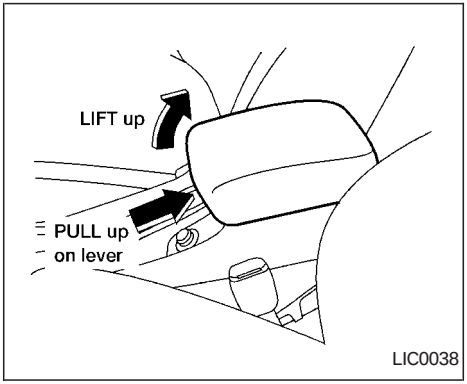

CONSOLE BOX (if so equipped)

⚠ WARNING

The center console box should not be used while driving so full attention may be given to vehicle operation.

Pull up on the lever to open the console box lid. The console box can store cassette tapes and compact discs. A business card holder and a tissue holder are also contained within the console box.

INSTRUMENT PANEL STORAGE (if so equipped)

To open the storage tray, push and release. The storage tray will automatically move to the open position.

- The inside of the storage tray can get hot. Do not place objects inside which can melt or be easily deformed.

⚠ WARNING

- **The storage tray should not be used while driving so full attention may be given to vehicle operation.**
- **Keep the tray lid closed while driving to help prevent contents from becoming projectiles causing injury in an accident or during a sudden stop.**

POWER WINDOWS (if so equipped)

WARNING

- **Make sure that all passengers have their hands, etc. inside the vehicle while it is in motion and before closing the windows. Use the window lock switch to prevent unexpected use of the power windows.**
- **Do not leave children unattended inside the vehicle. They could unknowingly activate switches or controls and become trapped in a window. Unattended children could become involved in serious accidents.**

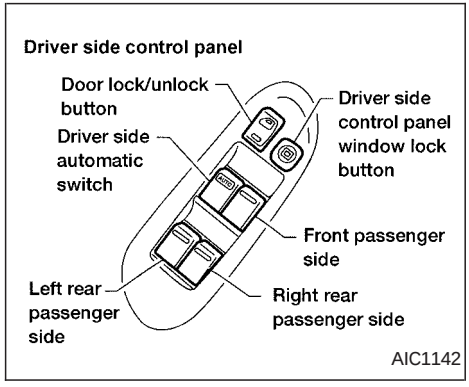

The power windows operate only when the ignition key is in the ON position.

To open the driver side window, push the driver's side automatic switch down until the desired window position is reached. To close the window, lift the switch up. The driver side control panel is equipped with switches to open or close all the windows.

Locking passengers' windows

When the window lock button is depressed, only the driver side window can be opened or closed. Push it again to cancel the window lock function.

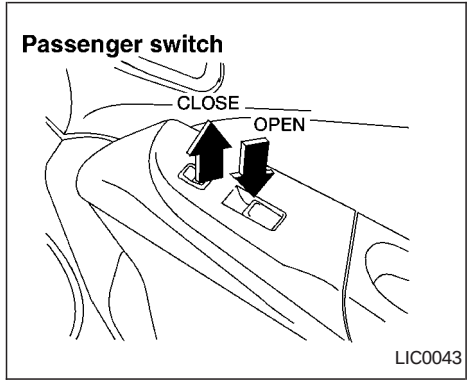

The passenger side switch opens or closes only the passenger side window. To open the window, push the switch down. To close the window, lift the switch up.

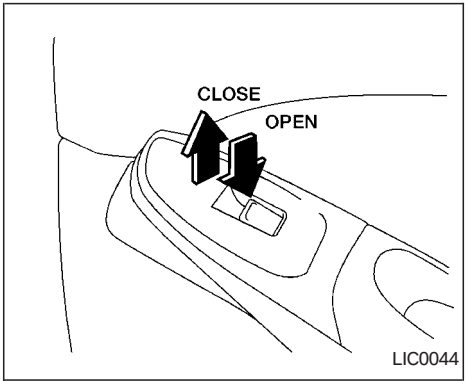

Rear power windows

The rear power window switches open or close only the corresponding window. To open the window, push the switch down. To close the window, lift the switch up.

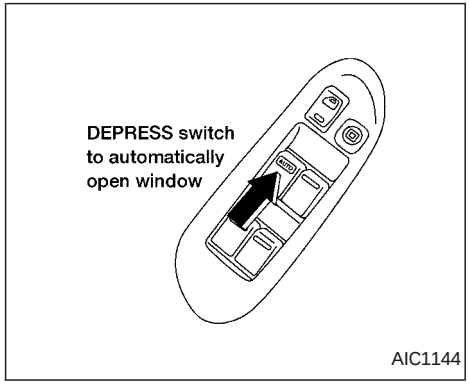

Automatic operation

To fully open the driver's side window, press the driver's side window switch down to the second detent and release it. The window automatically opens all the way. To stop the window, lift the switch up while the window is opening.

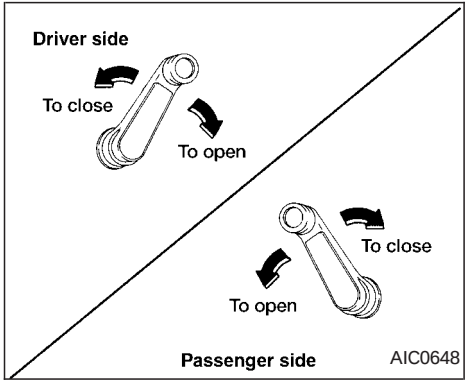

MANUAL WINDOWS

The side windows can be opened or closed by turning the hand crank on each door.

To open a window on the driver side, turn the crank clockwise. To close a window, turn the crank counterclockwise.

To open a window on the passenger side, turn the crank counterclockwise. To close a window, turn the crank clockwise.

SUNROOF
(if so equipped)

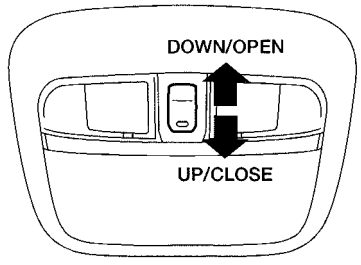

AIC1145

The sunroof only operates with the ignition key in the ON position.

NOTE:
If the battery is discharged or is disconnected, the sunroof may not operate correctly, and must be reset.

From any sunroof position (full open, partially open, closed, partially vented and vented), push and hold the button in the forward position until the sunroof vents in the full-up position. This resets the sunroof motor memory and now the sunroof will operate correctly.

Sliding the sunroof

To open the sunroof, push the switch toward DOWN/OPEN.

To close the sunroof, push the switch toward UP/CLOSE.

Tilting the sunroof

Close the sunroof by pushing the switch toward UP/CLOSE. Release the switch, then push the UP/CLOSE switch to tilt the sunroof up.

To tilt the sunroof down, push the switch toward DOWN/OPEN.

Sun shade

Open and close the sun shade by sliding it forward or backward.

⚠ WARNING

- **In an accident you could be thrown from the vehicle through an open sunroof. Always use seat belts and child restraints.**
- **Do not allow anyone to stand up or extend any portion of their body out of the sunroof opening while the vehicle is in motion, or while the sunroof is closing.**

⚠ CAUTION

- **Remove water drops, snow, ice or sand from the sunroof before opening.**
- **Do not place heavy objects on the sunroof or surrounding area.**

INTERIOR LIGHT

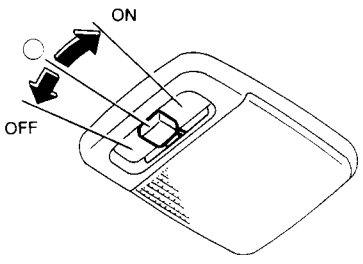

SIC0025

The interior light has a three-position switch.

The interior light operates regardless of ignition key position.

- When the switch is in the OFF position, the interior light does not illuminate, regardless of door position.
- When the switch is in the center ◯ position, the interior light illuminates when a door is opened.
- When the switch is in the ON position, the interior light illuminates, regardless of door position.

⚠ CAUTION

Do not use for extended periods of time with the engine stopped. This could result in a discharged battery.

MAP LIGHTS (if so equipped)

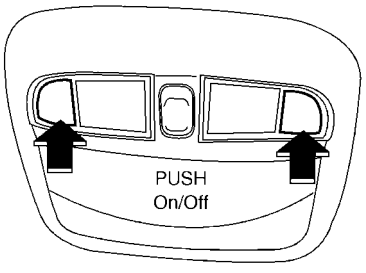

LIC0045

To turn the map lights on, press the switches. To turn them off, press the switches again.

TRUNK LIGHT (if so equipped)

The light illuminates when the trunk lid is opened. When the trunk lid is closed, the light goes off. For bulb replacement procedures, refer to “Bulb replacement” in the ‘‘Maintenance and do-it-yourself’’ section of this manual.

3 Pre-driving checks and adjustments

Keys 3-2
Nissan vehicle immobilizer system (NVIS) keys (if so equipped).....3-2
Doors.....3-3
Locking with key.....3-3
Locking with inside lock knob.....3-4
Locking with power door lock switch (if so equipped).....3-4
Child safety rear door lock.....3-4
Remote keyless entry system (if so equipped).....3-5
How to use remote keyless entry system 3-5
Battery replacement 3-8
Hood.....3-9
Trunk lid.....3-10
Opener operation 3-10
Key operation 3-11
Interior trunk lid release.....3-12
Fuel filler lid.....3-13
Opener operation 3-13
Fuel filler cap.....3-13
Steering wheel 3-15
Tilt operation.....3-15
Sun visors 3-15
Vanity mirror 3-15
Mirrors 3-16
Inside mirror.....3-16
Outside mirror remote control 3-16

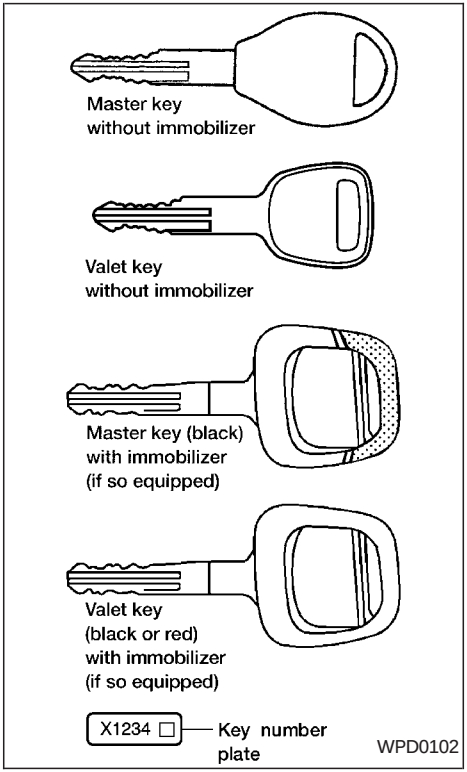

A key number plate is supplied with your keys. Record the key number and keep it in a safe place (such as your wallet), not in the vehicle. If you lose your keys, see an authorized NISSAN dealer for duplicates by using the key number. NISSAN does not record key numbers so it is very important to keep track of your key number plate.

A key number is only necessary when you have lost all keys and do not have one to duplicate from. If you still have a key, your authorized NISSAN dealer can duplicate it.

NISSAN VEHICLE IMMOBILIZER SYSTEM (NVIS) KEYS (if so equipped)

You can only start your vehicle using the keys that are supplied by your NISSAN dealer. Each key has a transponder chip in the key head that is electronically registered to your vehicle's NVIS. These keys can be used for all of the key locks on your vehicle.

Never leave these keys in the vehicle.

New or duplicate keys can only be obtained from your NISSAN dealer and must be registered to the Nissan Vehicle Immobilizer System (NVIS) components in your vehicle by an authorized NISSAN dealer.

As many as 5 NVIS keys can be used with one vehicle. You should bring all NVIS keys that you have to your authorized NISSAN dealer for registration. This is because the registration process will erase the memory of all key codes previously registered into the Nissan Vehicle Immobilizer System. After the registration process, these components will only recognize keys coded into the Nissan Vehicle Immobilizer System (NVIS) during registration. Any key that is not given to your dealer at the time of registration will no longer be able to start your vehicle.

⚠ WARNING

- **Always have the doors locked while driving. Along with the use of seat belts, this provides greater safety in the event of an accident by helping to prevent persons from being thrown from the vehicle. This also helps keep children and others from unintentionally opening the doors, and will help keep out intruders.**
- **Before opening any door, always look for and avoid oncoming traffic.**
- **Do not leave children unattended inside the vehicle. They could unknowingly activate switches and controls. Unattended children could become involved in serious accidents.**

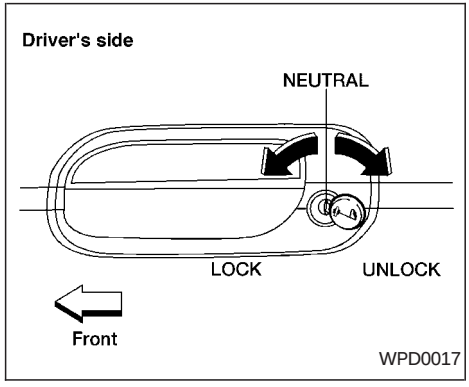

LOCKING WITH KEY

Manual

To lock the door, turn the key towards the front of the vehicle. To unlock, turn it towards the rear.

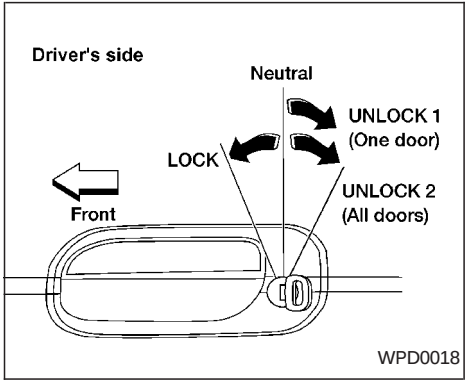

Power (if so equipped)

If your vehicle is equipped with the theft warning system, the power door lock system allows you to lock or unlock all doors simultaneously.

Turning the front door key to the front of the vehicle locks all doors.

Turning the front door key one time to the rear of the vehicle unlocks the corresponding door. From that position, returning the key to neutral (where the key can only be removed and inserted) and turning it to the rear again within 5 seconds unlocks all doors.

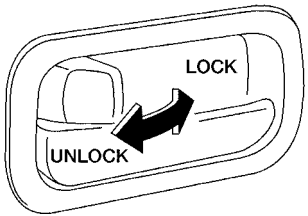

APD1109

LOCKING WITH INSIDE LOCK KNOB

To lock the door without the key, move the inside lock knob to the lock position, then close the door.

When locking the door this way, be certain not to leave the key inside the vehicle.

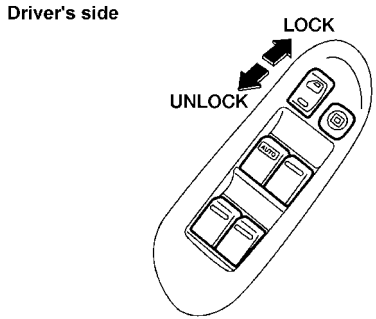

WPD0033

LOCKING WITH POWER DOOR LOCK SWITCH (if so equipped)

To lock all the doors without a key, push the door lock switch (driver or front passenger side), to the lock position. When locking the door this way, be certain not to leave the key inside the vehicle.

When the power door lock switch (driver or passenger side) is moved to the lock position with the key in the ignition and any door open, all doors will lock and then unlock automatically.

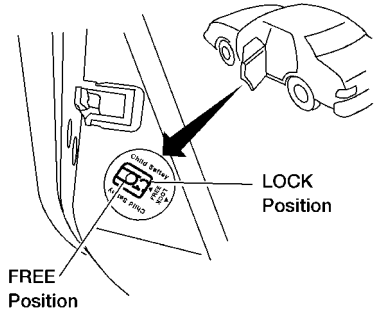

WPD0019

CHILD SAFETY REAR DOOR LOCK

Child safety locks help prevent the rear doors from being opened accidentally, especially when small children are in the vehicle.

The child safety lock levers are located on the edge of the rear doors.

When the lever is in the lock position, the rear door can be opened only from the outside.

REMOTE KEYLESS ENTRY SYSTEM (if so equipped)

It is possible to lock/unlock all doors, turn the interior light on or off, and activate the panic alarm by using the keyfob from outside the car.

Be sure to remove the key from the vehicle before locking the doors.

The keyfob can operate at a distance of approximately 49 ft (15 m) from the vehicle. The effective distance depends upon the conditions around the vehicle.

As many as four keyfobs can be used with one vehicle. For information concerning the purchase and use of additional keyfobs, contact an authorized NISSAN dealer.

⚠ CAUTION

Listed below are conditions or occurrences which will damage the keyfob:

- **Do not allow the keyfob to become wet.**
- **Do not drop the keyfob.**
- **Do not strike the keyfob sharply against another object.**
- **Do not place the keyfob for an extended period in an area where temperatures exceed 140°F (60°C).**

HOW TO USE REMOTE KEYLESS ENTRY SYSTEM

Locking doors

1. Close all windows.
2. Remove the key from the ignition switch.
3. Close the hood, trunk lid and all doors.
4. Push the LOCK button on the keyfob. All the doors lock. The hazard lights flash twice and the horn beeps once to indicate all doors are locked.

- When the LOCK button is pushed with all doors locked, the hazard lights flash twice and the horn beeps once as a reminder that the doors are already locked.

  The horn may or may not beep once. Refer to ‘‘Silencing the horn beep feature’’ later in this section for details.

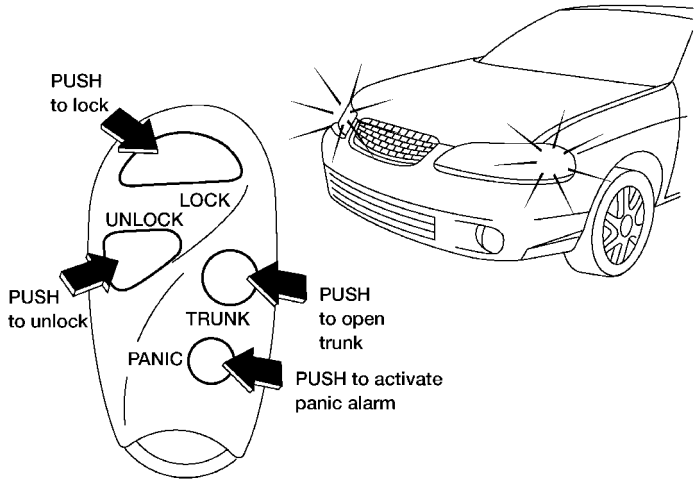

WPD0103

Unlocking doors

1. Push the UNLOCK button on the keyfob. Only the driver side door unlocks.
2. Push the UNLOCK button on the keyfob again within 5 seconds. The passenger doors unlock.
3. The interior light illuminates for approximately 30 seconds.

The interior light can be turned off without waiting for 30 seconds by turning the ignition to the ON position or by pressing the LOCK button on the keyfob.

Releasing the trunk lid

1. Push the TRUNK button on the keyfob for longer than 0.5 second. The trunk release button on the keyfob will not operate when the ignition switch is in the ON position.
2. The trunk lid opens.

Using the panic alarm

If you are near your vehicle and feel threatened, you may activate the panic alarm to call attention as follows:

1. Push the PANIC button on the remote controller for **longer than 0.8 seconds.**
2. The panic alarm and headlights stay on for 25 seconds.
3. The panic alarm stops when the LOCK, UNLOCK, or the PANIC button is pushed on the keyfob.

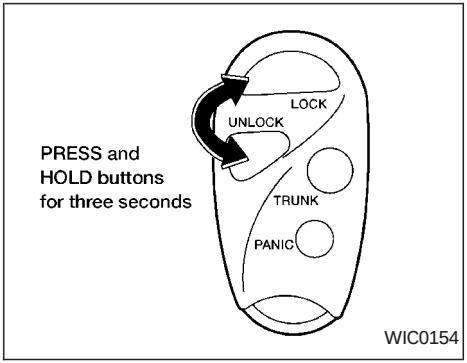

Silencing the horn beep feature

If desired, the horn beep feature can be deactivated using the keyfob.

To deactivate: Press and hold the LOCK and UNLOCK buttons **for at least three seconds.**
The hazard lights will quickly flash three times to confirm that the horn beep feature has been deactivated.

To activate: Press and hold the LOCK and UNLOCK buttons **for at least three seconds once more.**

The hazard lights will flash once and the horn will sound once to confirm that the horn beep feature has been reactivated.

Deactivating the horn beep feature does not silence the panic alarm.

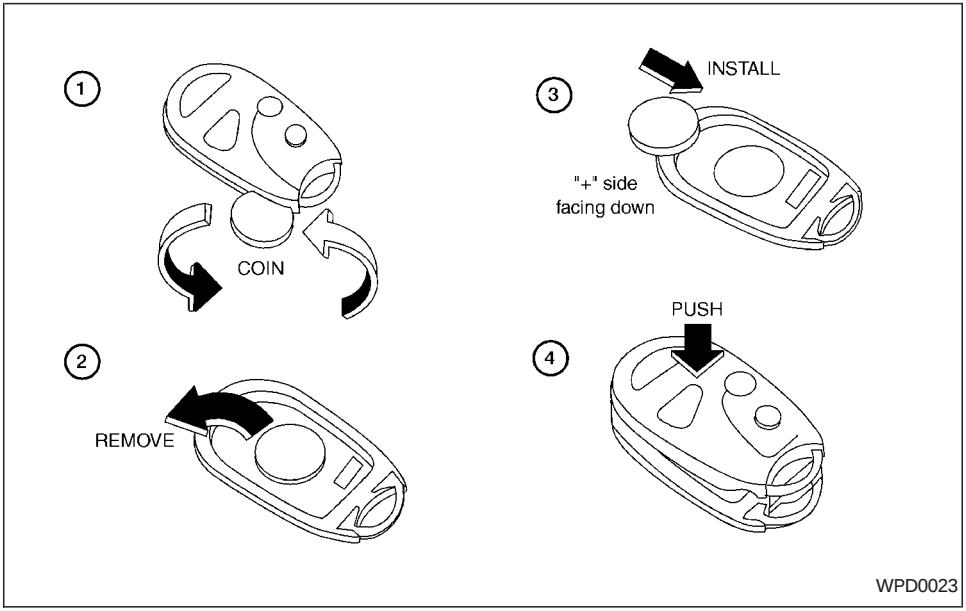

BATTERY REPLACEMENT

Replace the battery in the keyfob as follows:

1. Open the lid using a coin.
2. Remove the battery.
3. Install a new battery.

   Recommended battery: Sanyo CR2025 or equivalent.
4. Close the lid securely.
5. Press the LOCK button, then the UNLOCK button two or three times to check the keyfob operation.

If the battery is removed for any reason other than replacement, perform step five.

- **An improperly disposed battery can hurt the environment. Always confirm local regulations for battery disposal.**
- **The keyfob is water-resistant; however, if it does get wet, immediately wipe completely dry.**
- **The operational range of the keyfob extends to approximately 49 ft (15 m) from the vehicle. This range may vary with conditions.**

FCC Notice:

Changes or modifications not expressly approved by the manufacturer for compliance could void the user's authority to operate the equipment.

This device complies with Part 15 of the FCC Rules and RSS-210 of Industry Canada.

Operation is subject to the following two conditions: (1) This device may not cause harmful interference, and (2) this device must accept any interference received, including interference that may cause undesired operation of the device.

HOOD

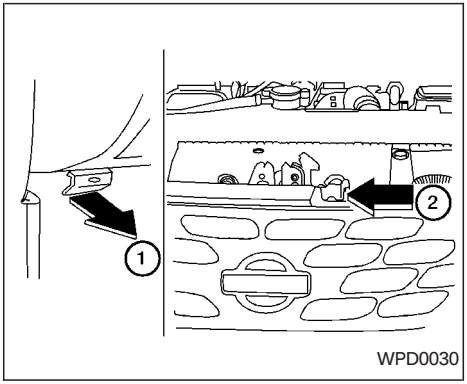

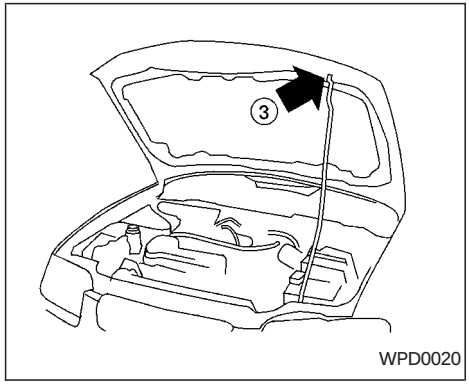

1. Pull the hood lock release handle ① located below the driver side instrument panel. The hood will spring up slightly.
2. Push the lever to the left ② at the front of the hood with your fingertips and raise the hood.
3. Insert the support rod ③ into the slot marked with the arrow on the underside of the hood.
4. When closing the hood, return the support rod to its original position, lower the hood to approximately 12 inches above the latch and release it. This allows proper engagement of the hood latch.

⚠ WARNING

- **Make sure the hood is completely closed and latched before driving. Failure to do so could cause the hood to fly open and result in an accident.**
- **If you see steam or smoke coming from the engine compartment, to avoid injury do not open the hood.**

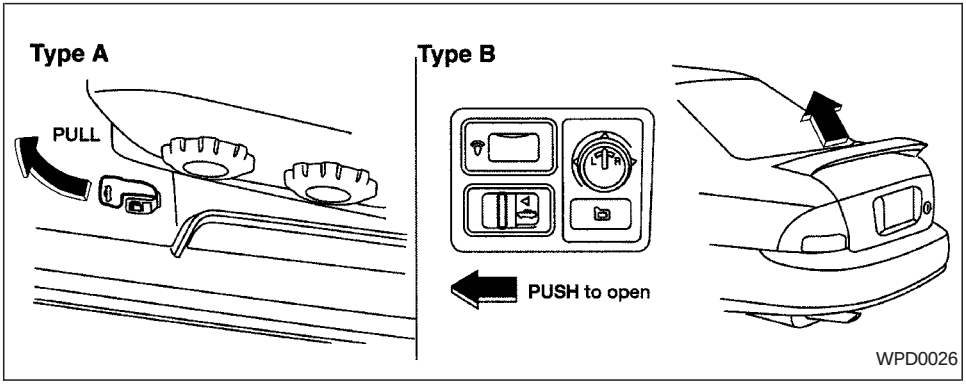

OPENER OPERATION

WARNING

- **Do not drive with the trunk lid open. This could allow dangerous exhaust gases to be drawn into the vehicle. See ‘‘Exhaust gas’’ in the ‘‘Starting and driving’’ section of this manual.**
- **Closely supervise children when they are around cars to prevent them from playing and becoming locked in the trunk where they could be seriously injured. Keep the car locked, with the trunk closed, when not in use, and prevent children’s access to car keys.**

Type A

The trunk lid opener lever is located on the outside of the driver’s seat. To open the trunk, pull up the opener lever. To close, push the trunk lid down securely.

Type B

The trunk lid release is located on the instrument panel. To open the trunk, push the release in the direction indicated in the illustration. To close the trunk lid, push it down securely.

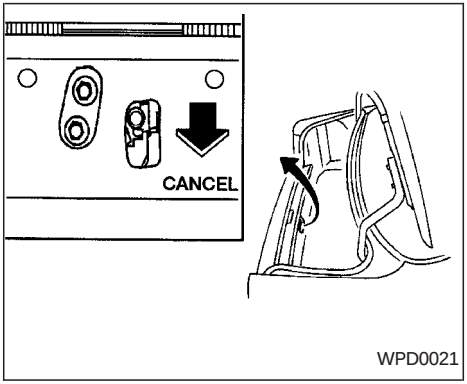

Cancel lever

When the lever is in the cancel position, the trunk lid cannot be opened with the trunk lid opener lever. It can be opened only with the key.

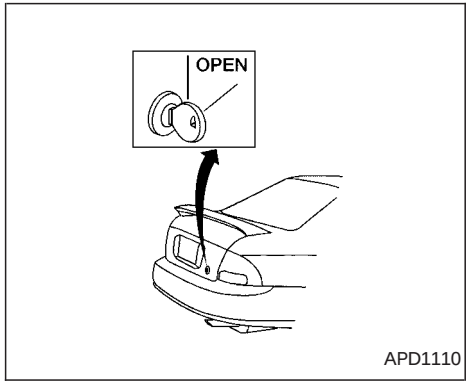

KEY OPERATION

To open the trunk lid from outside the vehicle, turn the key clockwise. To close the trunk lid, push the trunk lid down securely.

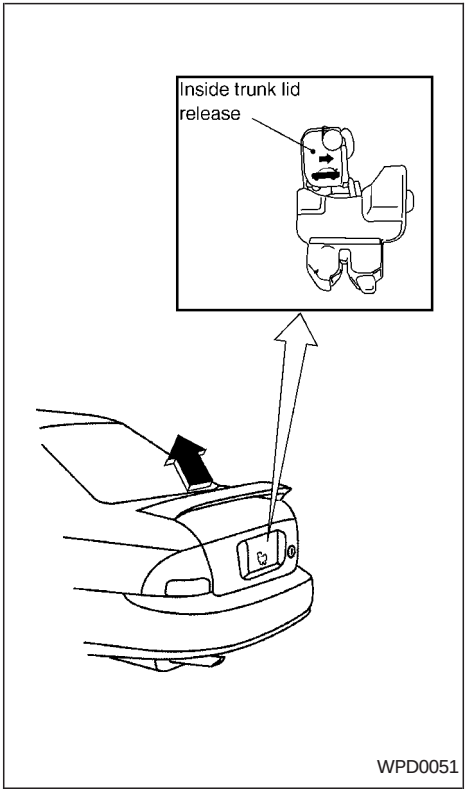

INTERIOR TRUNK LID RELEASE

WARNING

Closely supervise children when they are around cars to prevent them from playing and becoming locked in the trunk where they could be seriously injured. Keep the car locked, with the trunk closed, when not in use, and prevent children's access to car keys.

The interior trunk lid release mechanism provides a means of escape for children and adults in the event they become locked inside the trunk.

To open the trunk from the inside, rotate the illuminated lever until the lock releases and push up on the trunk lid. The release lever is made of a material that glows in the dark after a brief exposure to ambient light.

The handle is located inside the trunk compartment on the trunk lock at the center of the trunk lid.

FUEL FILLER LID

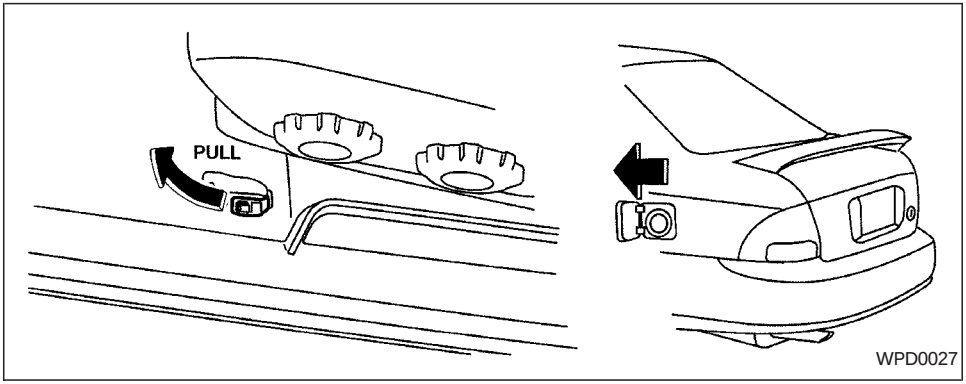

OPENER OPERATION

To open the fuel filler lid, pull up the opener lever. To lock, close the fuel filler lid securely.

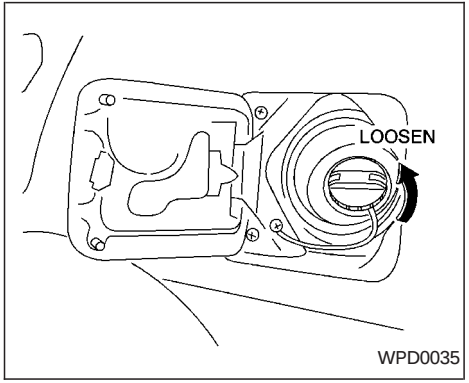

FUEL FILLER CAP

The fuel filler cap is a ratcheting type. Tighten the cap clockwise until ratcheting clicks are heard.

WARNING

- Gasoline is extremely flammable and highly explosive under certain conditions. You could be burned or seriously injured if it is misused or mishandled. Always stop the engine and do not smoke or allow open flames or sparks near the vehicle when refueling.
- Fuel may be under pressure. Turn the cap one-half turn and wait for any ‘‘hissing’’ sound to stop to prevent fuel from spraying out and possibly causing personal injury. Then remove the cap.
- Do not attempt to top off the fuel tank after the fuel pump nozzle shuts off automatically. Continued refueling may cause fuel overflow, resulting in fuel spray and possibly fire.
- Use only an original equipment type fuel filler cap as a replacement. It has a built-in safety valve needed for proper operation of the fuel system and emission control system. An incorrect cap can result in a serious malfunction and possible injury. It could also cause the malfunction indicator lamp to come on.

Do not fill a portable fuel container in the vehicle or trailer. Static electricity can cause an explosion of flammable liquid, vapor or gas in any vehicle or trailer. To reduce the risk of serious injury or death when filling portable fuel containers:

— Always place the container on the ground when filling.

— Do not use electronic devices while filling.

— Keep the pump nozzle in contact with the container while you are filling it.

— Use only approved portable fuel containers for flammable liquid.

- Never pour fuel into the throttle body to attempt to start your vehicle.

CAUTION

- If fuel is spilled on the vehicle body, flush it away with water to avoid paint damage.

- Tighten until the fuel filler cap clicks. Failure to tighten the fuel filler cap properly may cause the SERVICE ENGINE SOON malfunction indicator lamp (MIL) to illuminate. If the SERVICE ENGINE SOON lamp illuminates because the fuel filler cap is loose or missing, tighten or install the cap and continue to drive the vehicle. The SERVICE ENGINE SOON lamp should turn off after a few driving trips. If the SERVICE ENGINE SOON lamp does not turn off after a few driving trips, have the vehicle inspected by an authorized NISSAN dealer.
- For additional information, see the ‘‘Malfunction indicator lamp (MIL)’’ in the ‘‘Instruments and controls’’ section earlier in this manual.

STEERING WHEEL

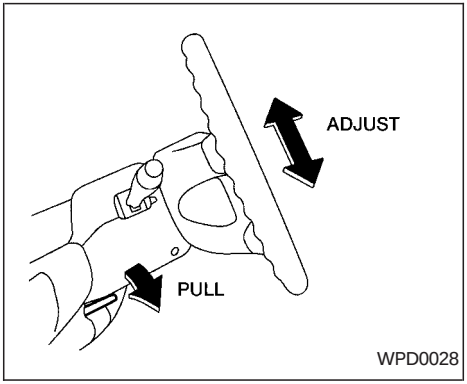

TILT OPERATION

Pull the lock lever down and adjust the steering wheel up or down to the desired position. Push the lock lever up firmly to lock the steering wheel in place.

WARNING

Do not adjust the steering wheel while driving. You could lose control of your vehicle and cause an accident.

SUN VISORS

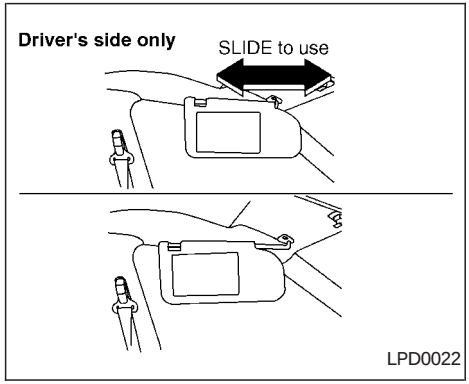

CAUTION

Do not store the sun visor before returning it to its original position.

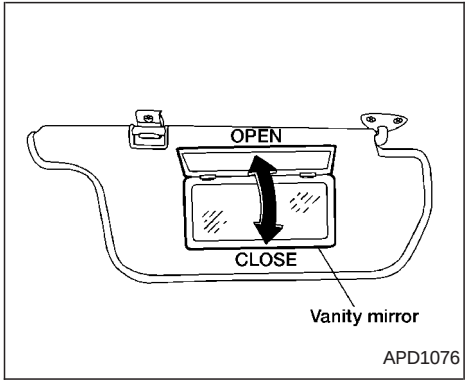

VANITY MIRROR

To access a vanity mirror, pull the sun visor down and lift the mirror cover. Some vanity mirrors are illuminated and turn on when the mirror cover is opened.

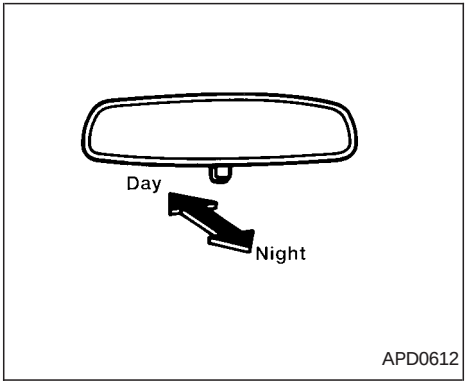

INSIDE MIRROR

The night position reduces glare from the headlights of vehicles behind you at night.

WARNING

Use the night position only when necessary, because it reduces rear view clarity.

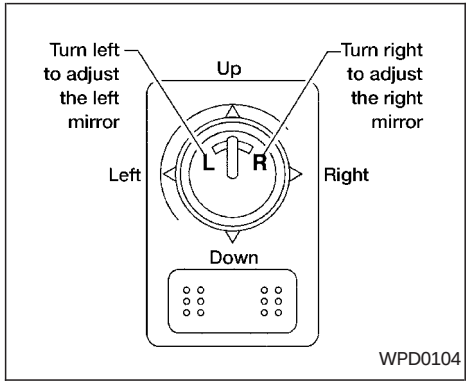

OUTSIDE MIRROR REMOTE CONTROL

Electric control type (if so equipped)

The outside mirror control operates only when the ignition switch is in the ACC or ON position.

Select the right or left side mirror, then adjust using the control lever.

WARNING

Objects viewed in the outside mirror on the passenger side are closer than they appear. Be careful when moving to the right. Using only this mirror could cause an accident. Use the inside mirror or glance over your shoulder to properly judge distances to other objects.

Heated Mirrors (Canada only)

The electric control type outside mirrors (if so equipped) can be heated to defrost, defog, or de-ice for improved visibility. Press the rear window defogger switch to activate the heating function. Press the switch again to deactivate, or the heating function will automatically turn off after approximately 15 minutes.

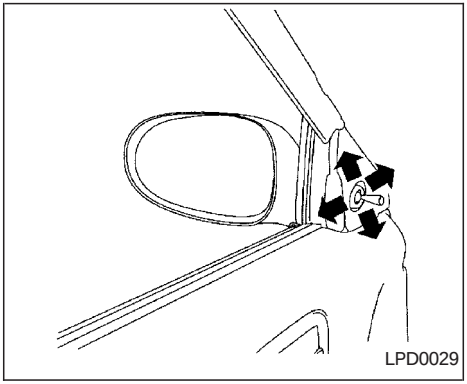

Manual control type

The outside mirror can be moved in any direction for a better rear view.

Objects viewed in the outside mirror on the passenger side are closer than they appear.

MEMO

4 Heater, air conditioner and audio systems

Ventilators 4-2
Heater and air conditioner.....4-3
Controls 4-3
Heater operation.....4-4
Air conditioner operation
(if so equipped).....4-5
Air flow charts.....4-6
Servicing air conditioner.....4-9
Audio system.....4-10
Radio 4-10
FM radio reception 4-10
AM radio reception 4-10
Audio operation precautions 4-11
FM-AM radio with compact disc player.....4-12
Compact disc (CD) changer
(if so equipped).....4-17
CD care and cleaning.....4-19
Antenna 4-19
Car phone or CB radio.....4-20

VENTILATORS

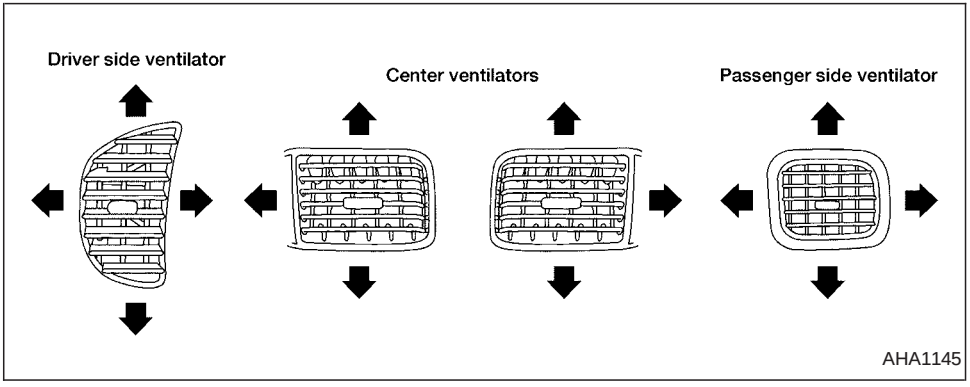

Adjust air flow direction by moving the ventilator slide.

HEATER AND AIR CONDITIONER

WARNING

- **The air conditioner cooling function operates only when the engine is running.**
- **Do not leave children, impaired adults, or pets alone in your vehicle. On hot, sunny days, temperatures in a closed vehicle could quickly become high enough to cause severe or possibly fatal injuries to people or animals.**
- **Do not use the recirculation mode for long periods as it may cause the interior air to become stale and the windows to fog up.**
- **Positioning of the heater and air conditioner controls should not be done while driving so full attention may be given to vehicle operation.**

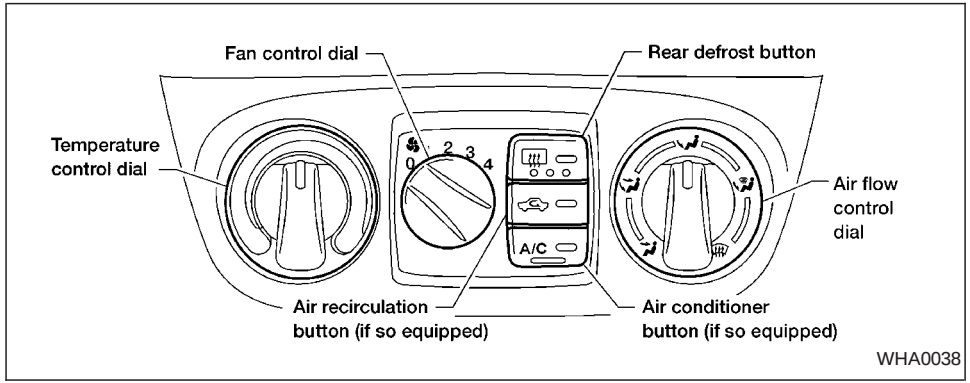

CONTROLS

Fan control dial

This dial turns the fan on and off, and controls fan speed.

Air flow control dial

This dial allows you to select the air flow outlets.

— Air flows from center and side ventilators.

— Air flows from center and side ventilators and foot outlets.

— Air flows mainly from foot outlets.

— Air flows from defroster outlets and foot outlets.

— Air flows mainly from defroster outlets.

The air flow control dial also has intermediate positions which allow the air flow to be distributed between two of the icon positions on the air flow control dial.

Temperature control dial

This dial allows you to adjust the temperature of the outlet air.

Air recirculation button (if so equipped)

NOTE:

The air recirculation feature is available only on those vehicles equipped with air conditioning.

OFF position (indicator light off):

Outside air is drawn into the passenger compartment and distributed through the selected outlets.

Use the OFF position for normal heater or air conditioner operation.

ON position (indicator light on):

Interior air is recirculated inside the vehicle.

Push the button to the on position when:

- driving on a dusty road.
- to avoid traffic fumes.
- for maximum cooling when using the air conditioner.

A/C Air conditioner button (if so equipped)

Start the engine, turn the fan control dial to the desired (one to four) position, and push the A/C button to turn on the air conditioner. The indicator light comes on when the air conditioner is operating. To turn off the air conditioner, push the A/C button again.

The air conditioner cooling function operates only when the engine is running.

HEATER OPERATION

Heating

This mode is used to direct hot air mainly from the foot outlets. A small amount of air also flows from the defrost outlets.

1. Push the button (if so equipped) to the off position for normal heating.
2. Move the air flow control dial to the position.
3. Move the fan control dial to the desired position.
4. Move the temperature control dial to the desired position between the middle and the hot position.

Ventilation

This mode directs outside air from the side and center vents.

1. Push the button (if so equipped) to the off position.
2. Move the air flow control dial to the position.
3. Move the fan control dial to the desired position.
4. Move the temperature control dial to the desired position.

Defrosting or defogging

This mode is used to defrost/defog the windows.

1. Move the air flow control dial to the position.
2. Move the fan control dial to the desired position.
3. Move the temperature control dial to the desired position between the middle and the hot position.

- To quickly remove ice or fog from the windows, turn on the fan control dial to 4 and the temperature control lever to the full HOT position.
- When the position is selected, the air conditioner automatically turns on (however, the indicator light will not illuminate). This dehumidifies the air which helps defog the windshield.

Bi-level heating

This mode directs cooler air from the side and center vents and warmer air from the floor outlets. When the temperature control dial is moved to the full hot or full cool position, the air between the vents and the floor outlets is the same temperature.

1. Push the button (if so equipped) to the off position.
2. Move the air flow control dial to the position.
3. Move the fan control dial to the desired position.
4. Move the temperature control dial to the the desired position.

Heating and defogging

This mode heats the interior and defogs the windshield.

1. Move the air flow control dial to the position.

- When the position is selected the function automatically cancels. Outside air is drawn into the passenger compartment to improve the defogging performance.

2. Move the fan control dial to the desired position.
3. Move the temperature control dial to the desired position between the middle and the hot position.

- When the position is selected, the air conditioner automatically turns on (however, the indicator light will not illuminate). This dehumidifies the air which helps defog the windshield.

Operating tips

Clear snow and ice from the wiper blades and air inlet in front of the windshield. This improves heater operation.

AIR CONDITIONER OPERATION (if so equipped)

Start the engine, move the fan control dial to the desired (one to four) position, and push in the A/C button to activate the air conditioner. When the air conditioner is on, cooling and dehumidifying functions are added to the heater operation.

The air conditioner cooling function operates only when the engine is running.

Cooling

This mode is used to cool and dehumidify the air.

1. Push the button to the off position.
2. Move the air flow control dial to the position.
3. Move the fan control dial to the desired position.
4. Push the A/C button. The indicator light comes on.
5. Move the temperature control dial to the desired position.

For quick cooling when the outside temperature is high, push the button to

the on position. Be sure to return the to the off position for normal cooling.

Dehumidified heating

This mode is used to heat and dehumidify the air.

1. Push the button to the off position.
2. Move the air flow control dial to the position.
3. Move the fan control dial to the desired position.
4. Push the A/C button. The indicator light comes on.
5. Move the temperature control dial to the desired position.

Dehumidified defogging

This mode is used to defog the windows and dehumidify the air.

1. Move the air flow control dial to the position.

- When the position is selected the function automatically cancels. Outside air is drawn into the passenger compartment to improve the defogging performance.
- When the position is selected, the air conditioner automatically turns on (however, the indicator light will not illuminate). This dehumidifies the air which helps defog the windshield.

2. Move the fan control dial to the desired position.
3. Move the temperature control dial to the desired position.

Operating tips

- Keep windows and sunroof closed while the air conditioner is in operation.
- After parking in the sun, drive for two or three minutes with the windows open to vent hot air from the passenger compartment. Then, close the windows. This allows the air conditioner to cool the interior more quickly.
- **The air conditioning system should be operated for approximately ten minutes at least once a month. This helps prevent damage to the system due to lack of lubrication.**
- **If the engine coolant temperature gauge indicates engine coolant temperature over the normal range, turn the air conditioner off. See ‘‘If your vehicle overheats’’ in the ‘‘In case of emergency’’ section of this manual.**

AIR FLOW CHARTS

The following charts show the button and dial positions for **MAXIMUM AND QUICK** heating, cooling or defrosting. **The air recirculation button should always be in the OFF position for heating and defrosting.**

DEFROSTING
DEFOGGING

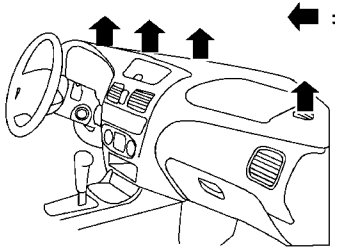

: Air passed through heater core

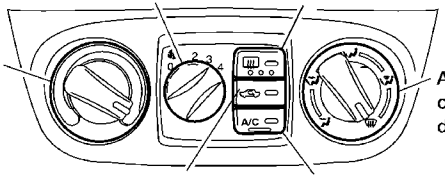

A/C switch (if so equipped)	Air recirculation button (if so equipped)	Air control	Temp control	Fan control
OFF (automatically turns on)	OFF		HOT (RIGHT)	4

WHA0027

HEATING &
DEFROSTING
DEFOGGING

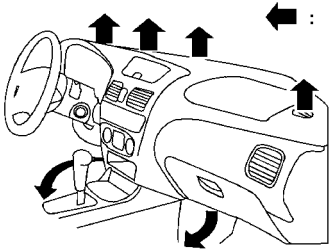

: Air passed through heater core

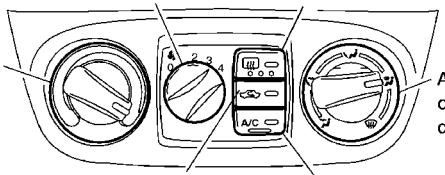

A/C switch (if so equipped)	Air recirculation button (if so equipped)	Air control	Temp control	Fan control
OFF (automatically turns on)	OFF		HOT (RIGHT)	4

WHA0028

HEATING
No air at
center vents

: Air passed through
heater core

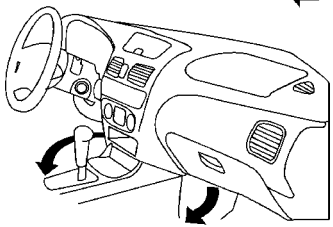

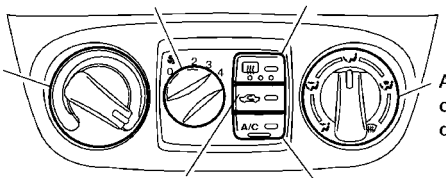

A/C switch (if so equipped)	Air recirculation button (if so equipped)	Air control	Temp control	Fan control
OFF	OFF		HOT (RIGHT)	4

WHA0029

BI-LEVEL
HEATING
Heated air at
center vents

: Air passed through
heater core

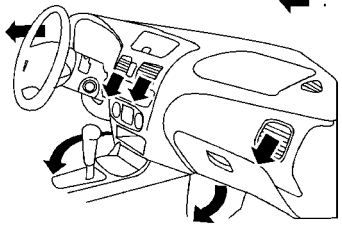

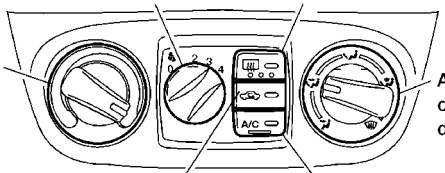

A/C switch (if so equipped)	Air recirculation button (if so equipped)	Air control	Temp control	Fan control
OFF	OFF		HOT (RIGHT)	4

WHA0030

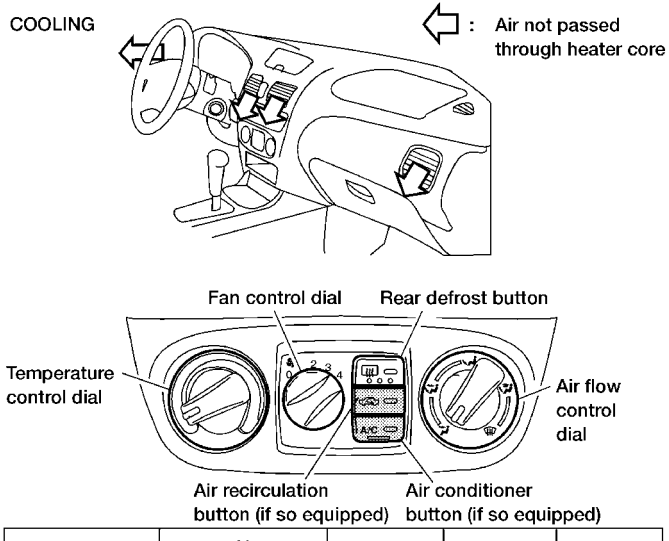

A/C switch (if so equipped)	Air recirculation button (if so equipped)	Air control	Temp control	Fan control
ON	ON		COLD (LEFT)	4

WHA0031

SERVICING AIR CONDITIONER

The air conditioner system in your NISSAN is charged with a refrigerant designed with the environment in mind.

This refrigerant does not harm the earth's ozone layer.

Special charging equipment and lubricant is required when servicing your NISSAN air conditioner. Using improper refrigerants or lubricants causes severe damage to your air conditioner system. See ''Air conditioner system refrigerant and lubricant recommendations'' in the ''Technical and consumer information'' section of this manual.

An authorized NISSAN dealer will be able to service your environmentally ''friendly'' air conditioner system.

WARNING

The air conditioner system contains refrigerant under high pressure. To avoid personal injury, any air conditioner service should be done only by an experienced technician with proper equipment.

RADIO

Turn the ignition key to ACC or ON and press the power on switch to turn on the radio. If you listen to the radio with the engine not running, the key should be turned to the ACC position.

Radio reception is affected by station signal strength, distance from radio transmitter, buildings, bridges, mountains and other external influences. Intermittent changes in reception quality normally are caused by these external influences.

Using a cellular phone in or near the vehicle may influence radio reception quality.

Radio reception

Your NISSAN radio system is equipped with state-of-the-art electronic circuits to enhance radio reception. These circuits are designed to extend reception range, and to enhance the quality of that reception.

However there are some general characteristics of both FM and AM radio signals that can affect radio reception quality in a moving vehicle, even when the finest equipment is used. These characteristics are completely normal in a given reception area, and do not indicate any malfunction in your NISSAN radio system.

Reception conditions will constantly change because of vehicle movement. Buildings, terrain, signal distance and interference from other vehicles can work against ideal reception. Described below are some of the factors that can affect your radio reception.

FM RADIO RECEPTION

Range: FM range is normally limited to 25 to 30 miles (40 to 48 km), with monaural (single channel) FM having slightly more range than stereo FM. External influences may sometimes interfere with FM station reception even if the FM station is within 25 miles (40 km). The strength of the FM signal is directly related to the distance between the transmitter and receiver. FM signals follow a line-of-sight path, exhibiting many of the same characteristics as light. For example they will reflect off objects.

Fade and drift: As your vehicle moves away from a station transmitter, the signals will tend to fade and/or drift.

Static and flutter: During signal interference from buildings, large hills or due to antenna position, usually in conjunction with increased distance from the station transmitter, static or flutter can be heard. This can be reduced by adjusting the treble control counterclockwise to reduce treble response.

Multipath reception: Because of the reflective characteristics of FM signals, direct and reflected signals reach the receiver at the same time. The signals may cancel each other, resulting in momentary flutter or loss of sound.

AM RADIO RECEPTION

AM signals, because of their low frequency, can bend around objects and skip along the ground. In addition, the signals can be bounced off the ionosphere and bent back to earth. Because of these characteristics. AM signals are also subject to interference as they travel from transmitter to receiver.

Fading: Occurs while the vehicle is passing through freeway underpasses or in areas with many tall buildings. It can also occur for several seconds during ionospheric turbu-

lence even in areas where no obstacles exist.

Static: Caused by thunderstorms, electrical power lines, electric signs and even traffic lights.

AUDIO OPERATION PRECAUTIONS

Compact Disc (CD) Player

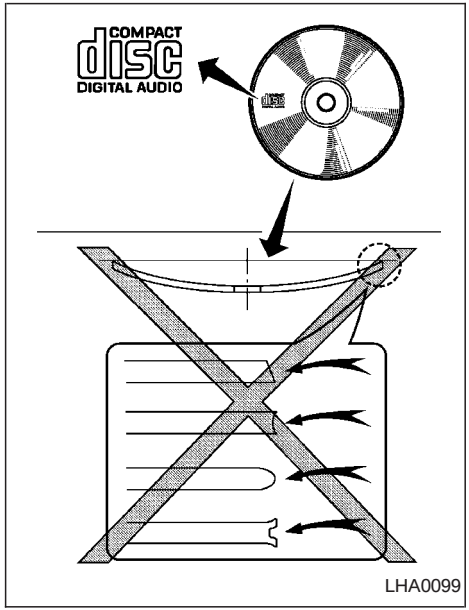

- **Only use high quality 4.7 inches (12 cm) round discs that have the ''COMPACT disc DIGITAL AUDIO'' logo on the disc or packaging.**
- **During cold weather or rainy days, the player may malfunction due to the humidity. If this occurs, remove the CD and dehumidify or ventilate the player completely.**
- **The player may skip while driving on rough roads.**
- **The CD player sometimes cannot function when the compartment temperature is extremely high. Decrease the temperature before use.**
- **Do not expose the CD to direct sunlight.**
- **CDs that are of poor quality, dirty, scratched, covered with fingerprints, or that have pin holes may not work properly.**
- **Do not use the following CDs as they may cause the CD player to malfunction:**
  - **8 cm (3.1 in) discs with an adapter**
  - **Recordable compact discs (CD-R)**
  - **Rewritable compact discs (CD-RW)**
  - **CDs that are not round**
  - **CDs with a paper label**
  - **CDs that are warped, scratched, or have abnormal edges**

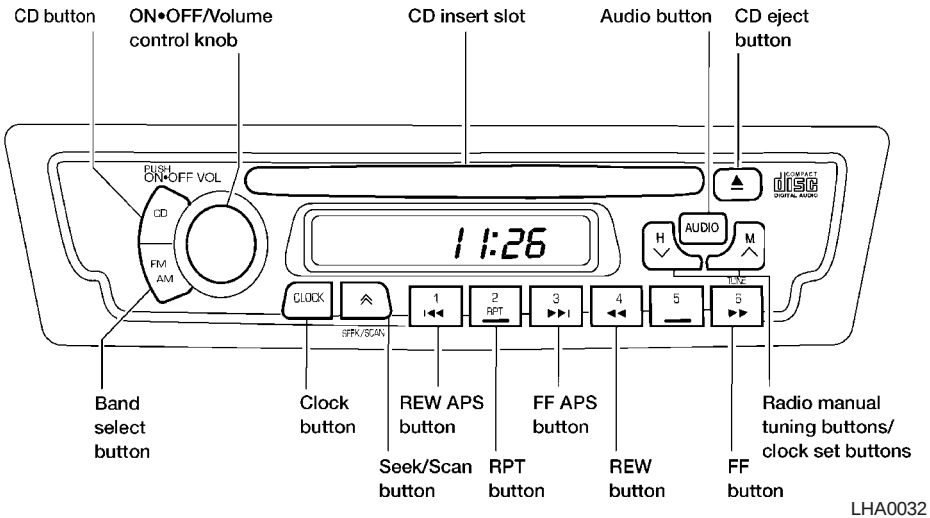

FM-AM RADIO WITH COMPACT DISC PLAYER

Audio Main Operation

To turn the radio on, turn the ignition key to ACC or ON. If you listen to the radio with the engine not running, turn the key to the ACC position.

Radio reception is affected by station signal strength, distance from radio transmitter, buildings, bridges, mountains, and other external influences. Intermittent changes in reception quality normally are caused by these external influences.

Using a cellular phone in or near the vehicle may influence radio reception quality.

ON·OFF/VOL control knob

Turn the ignition key to ACC or ON, then push the ON·OFF/VOL control knob. The mode (radio or CD) which was playing immediately before the system was turned off resumes playing. When no CD is loaded, the radio comes on. Pushing the ON·OFF/VOL button again turns the system off.

Turn the ON·OFF/VOL control knob to the right to increase volume or to the left to decrease volume.

Adjusting tone quality and speaker balance

To adjust BAS/TRE or FAD/BAL (Bass/Treble or Fader/Balance), press the AUDIO button until the desired mode (BAS, TRE, FAD, or BAL) appears in the display. Press the H or M button to adjust Bass (BAS) and Treble (TRE) to the desired level. Use the H or M button also to adjust Fader (FAD) or Balance (BAL) modes.

Fader (FAD) adjusts the sound level between the front and rear speakers and Balance (BAL) adjusts the sound between the right and left speakers.

Clock operation

Pressing the clock button alternates the clock and the radio/CD player options in the display.

Clock set

Depressing the clock and H ⌄ buttons together sets hours. Depressing the clock and M ⌃ buttons together sets minutes.

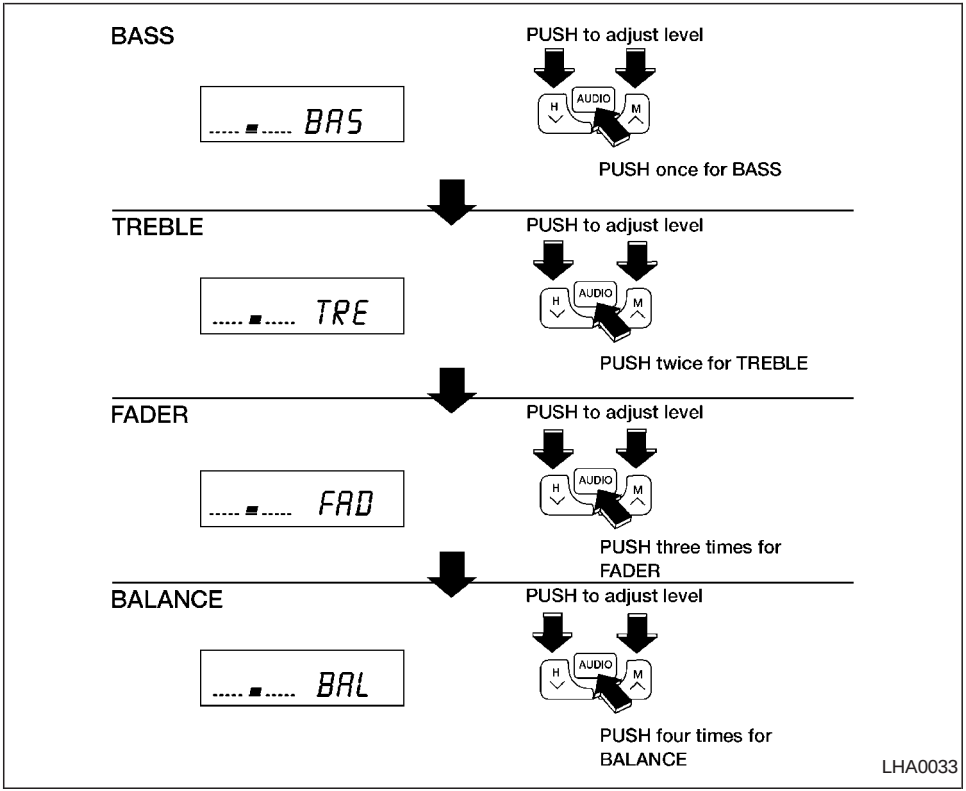

Clock priority mode

In this mode the clock is shown in the display. If any radio or CD functions are activated, the radio or CD display illuminates for 10 seconds then returns to the clock mode.

NOTE:

After clock adjustment, the radio is in the clock priority mode.

FM-AM radio operation

FM/AM band select

Push the button to change from AM to FM reception.

The FM stereo indicator, ST, illuminates during FM stereo reception. When the stereo broadcast signal is weak, the radio automatically changes from stereo to monaural reception.

TUNE buttons

WARNING

The radio should not be tuned while driving so full attention may be given to vehicle operation.

Use the H and M buttons for manual tuning. To move quickly through the channels, hold either of the tune buttons down for more than 0.5 seconds.

SEEK/SCAN button

SEEK tuning

Push the SEEK/SCAN tuning button for less than 1.5 seconds. SEEK tuning begins from high to low frequencies or low to high frequencies, depending on which button is pressed, and stops at the next broadcasting station. Once the highest broadcasting station is reached, the radio continues in the SEEK mode at the lowest broadcasting station.

SCAN tuning

Push the SEEK/SCAN tuning button for more than 1.5 seconds. SCAN illuminates in the display. SCAN tuning begins from high to low frequencies or low to high frequencies, depending on which button is pressed. SCAN tuning stops at each broadcasting station for five seconds. Pushing the button again during this five second period stops SCAN tuning and the radio remains tuned to that station.

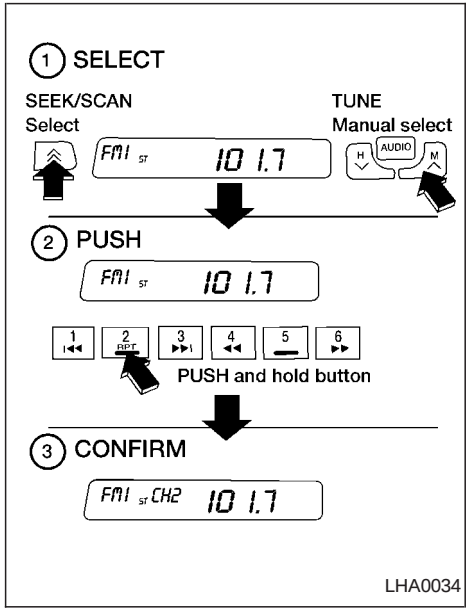

Station memory operations

Six stations can be set for the AM band. Twelve stations can be set for the FM band (six for FM1, six for FM2).

1. Push to select AM, FM1, or FM2. The selected band illuminates in the display.
2. Tune to the desired station.
3. Push the desired station select button for more than 1.5 seconds. For example, in the illustrations, ch2 is to be memorized. The radio mutes when the select button is pushed.
4. When the indicator illuminates in the display and the sound resumes, memorizing is complete.
5. Other station select buttons can be set in the same manner.

If the battery cable is disconnected, or if the radio fuse opens, the radio memory is cancelled. In that case, reset the desired stations.

Compact disc (CD) player operation

Turn the ignition key to the ACC or ON position, and carefully insert the compact disc into the slot with the label side up. The compact disc is automatically pulled into the slot and starts to play.

If the radio is already operating, it automatically turns off and the compact disc begins to play.

⚠ CAUTION

Do not force the compact disc into the slot. This could damage the player.

CD

When this button is pushed with the compact disc loaded and the radio playing, the radio turns off and the compact disc starts to play.

When this button is pushed while the compact disc is playing, the compact disc stops playing.

FF (Fast Forward), REW (Rewind) buttons

When the ▶▶ 6 or ◀◀ 4 button is pushed while the compact disc is playing, the compact disc plays at an increased speed while fast forwarding or rewinding. When the button is released, the compact disc returns to normal play speed.

APS (Automatic Program Search) FF, APS REW

When the ▶▶| 3 button is pushed while the compact disc is playing, the selection following the present one starts to play from the beginning. Push the ▶▶| 3 button several times to skip several selections. Each time the button is pushed, the CD advances one selection. (When the last selection on the compact disc is skipped, the first selection is played.)

When the |◀◀ 1 button is pushed, the selection being played returns to the beginning. Push the |◀◀ 1 button several times to skip back several selections. Each time the button is pushed, the CD moves back one selection.

Repeat/Random button

When the 2 RPT button is pushed while the compact disc is playing, the play pattern changes as follows.

1: The current selection is repeated.

RANDOM: Selections are played at random, not following the sequence on the compact disc. The same program may be repeated twice.

Normal (no symbol): All selections are played in sequence.

When a new compact disc is inserted, the play pattern automatically changes to the "Normal" play pattern.

CD EJECT button

When the ⏏ button is pushed with a compact disc loaded, the compact disc ejects.

When the ⏏ button is pushed while the compact disc is playing, the compact disc ejects and the system turns off.

If the compact disc ejects and is not removed within 10 seconds, it is pulled back into the slot.

Disc indicator light

CD IN appears in the display when a CD is loaded with the system ON.

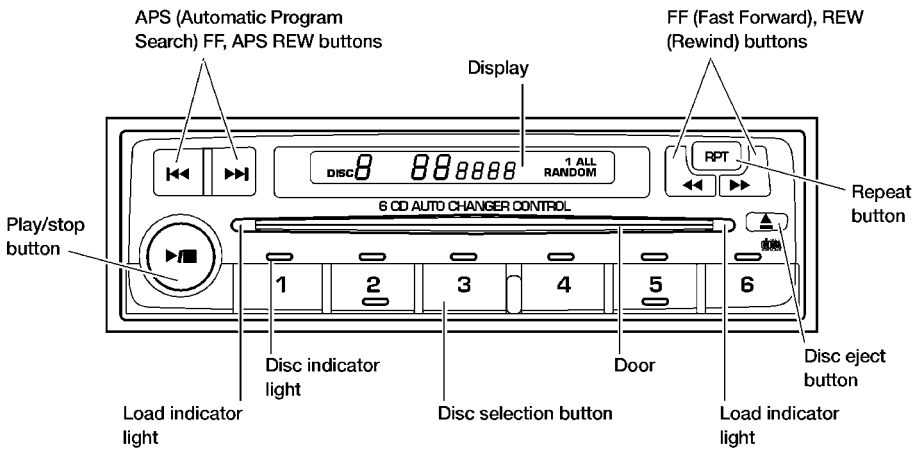

WHA0070

COMPACT DISC (CD) CHANGER (if so equipped)

To use the CD changer, turn the ignition key to the ACC or ON position.

Disc Loading - Single

CAUTION

Trying to load a CD with the door closed could damage the CD and/or CD changer.

When a disc selection button is pressed for less than 1.5 seconds, the CD changer enters the One Disc Loading Mode. The disc selection button starts flashing green and both WAIT and the disc selection button number flash in the display until the door is opened. When the door has opened, the display changes from WAIT to LOAD and the load indicator lights flash green. Load only one CD at a time. After the CD is loaded, the door closes, the load indicator lights turn off and the disc selection button turns a solid green. The CD that was loaded starts to play automatically.

Disc Loading - ALL

When a disc selection button is pressed for longer than 1.5 seconds, the CD changer automatically changes to All Disc Loading Mode. All disc selection buttons start flashing orange, except the disc selection button that was pushed initially. This button flashes green and both WAIT and the disc selection button number flash in the display until the door is opened. When the door opens, the display changes from WAIT to LOAD and the load indicator lights flash green. Load only one CD at a time. After the CD is loaded, the door closes, the load indicator

lights turn off and the disc selection button turns a solid green. After all the CDs have been loaded, the CD that was loaded first starts to play.

▶/■ Play/Stop button

Press the ▶/■ button while a CD is playing, the CD stops playing and the CD changer turns off. Press the ▶/■ button while the CD changer is off, the last CD that was loaded starts to play. Press the ▶/■ button with no CDs loaded, the CD changer enters the One Disc Loading Mode.

◀◀ ▶▶ FF (fast forward) REV (reverse) buttons

When the ◀◀ or ▶▶ button is pushed while the CD is playing, the CD plays at an increased speed while fast forwarding or reversing. When the button is released, the CD returns to normal play speed.

|◀◀ ▶▶| APS (Automatic Program Search) FF, APS REV

When the ▶▶| button is pushed while the CD is playing, the selection following the current one starts to play from the beginning. Push the ▶▶| button several times to skip several selections. Each time the button is pushed, the CD advances one selection. When the last selection on the CD is skipped, the first selection is played.

When the |◀◀ button is pushed, the current selection returns to the beginning. Push the |◀◀ button several times to skip back several selections. Each time the button is pushed, the CD moves back one selection. When the first selection on the CD is skipped, the last selection is played.

RPT Repeat Button

When the **RPT** button is pushed while a CD is playing, the play pattern will change as follows.

ALL - All disc repeat: All CDs are played repeatedly in sequence.

BLANK (no symbol) - One disc repeat: The current CD is repeated.

1 - One track repeat: The current selection is repeated.

ALL RANDOM - All disc random: Selections from all the CDs that are stored are played at random. The same program may be repeated twice. Pressing the ▶▶| button will select the next random selection.

RANDOM - One disc random: Selections from the current CD are played at random. The same program may be repeated twice. Pressing the ▶▶| button will select the next random selection.

When a new CD is inserted, the play pattern automatically changes to the "ALL" play pattern.

⏏ CD Eject - Single

When the ⏏ button is pressed for less than 1.5 seconds, then the current CD that is playing (or if the CD changer is off, the last CD that was played) ejects. The disc indicator light starts flashing orange and both WAIT and the disc selection button number flash in the display until the CD is ejected. When the CD is ejected, the disc indicator light turns off and the display turns from WAIT to EJECT. When the CD is removed from the unit, the CD changer automatically changes to One Disc Loading Mode so a new CD can be loaded into the empty holder. The disc indicator light starts flashing green and both LOAD and the disc selection button number appear in the display until a CD is loaded. One Disc Loading

Mode cancels if another disc selection button is pushed or by waiting longer than 15 seconds to load a CD.

CD Eject - ALL

When the ⏏ button is pressed for longer than 1.5 seconds, the CD changer automatically changes to All Disc Eject Mode. The disc indicator light for the current CD (or the last CD that was played) starts flashing orange and both WAIT and the disc selection button number flash in the display until the CD ejects. When the CD ejects, the disc indicator light turns off and the display turns from WAIT to EJECT. When the CD is removed from the unit, the next CD starts to eject. After all the CDs are ejected, the CD changer turns off.

If a CD is ejected and is not removed within 10 seconds, it will be pulled back into the slot.

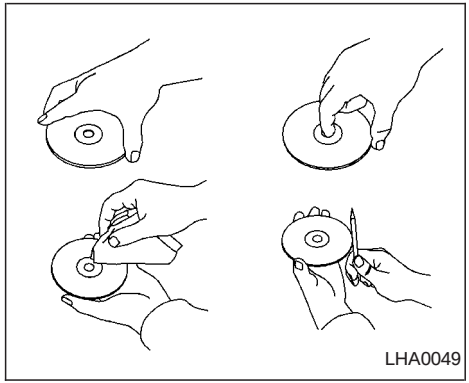

CD CARE AND CLEANING

- Handle a CD by its edges. Never touch the surface of the disc. Do not bend the disc.
- Always place the discs in the storage case when they are not being used.
- To clean a disc, wipe the surface from the center to the outer edge using a clean, soft cloth. Do not wipe the disc using a circular motion.

  Do not use a conventional record cleaner or alcohol intended for industrial use.
- A new disc may be rough on the inner and outer edges. Remove the rough edges by rubbing the inner and outer edges with the side of a pen or pencil as illustrated.

ANTENNA

The antenna cannot be shortened, but can be removed. When you need to remove the antenna, turn the antenna rod counterclockwise.

To install the antenna rod, turn the antenna clockwise. Tighten the antenna rod to specification using a suitable tool such as an open-end wrench. The antenna rod tightening specification is 3.4 - 3.6 N·m (30 - 32 in-lb). Do not use pliers to tighten the antenna as they can leave marks on the antenna surface. The antenna rod cannot be hand tightened to the proper specification.

⚠ CAUTION

Always properly tighten the antenna rod during installation or the antenna rod may break during vehicle operation.

CAR PHONE OR CB RADIO

When installing a CB ham radio or a car phone in your NISSAN, be sure to observe the following cautions, otherwise the new equipment may adversely affect the Multiport Fuel Injection (MFI) system and other electronic parts.

WARNING

- **A cellular telephone should not be used while driving so full attention may be given to vehicle operation. Some jurisdictions prohibit the use of cellular telephones while driving.**
- **If you must make a call while your vehicle is in motion, the hands free cellular phone operational mode (if so equipped) is highly recommended. Exercise extreme caution at all times so full attention may be given to vehicle operation.**
- **If a conversation in a moving vehicle requires you to take notes, pull off the road to a safe location and stop your vehicle before doing so.**

CAUTION

- **Keep the antenna as far away as possible from the Engine Control Module (ECM).**
- **Keep the antenna wire more than 8 in. (20 cm) away from the Multiport Fuel Injection harness. Do not route the antenna wire next to any harness.**
- **Adjust the antenna standing-wave ratio as recommended by the manufacturer.**
- **Connect the ground wire from the CB radio chassis to the body.**
- **For details, consult an authorized NISSAN dealer.**

5 Starting and driving

Precautions when starting and driving.....5-2
Exhaust gas (carbon monoxide) 5-2
Three-way catalyst 5-2
Avoiding collision and rollover.....5-3
Drinking alcohol/drugs and driving.....5-3
Ignition switch.....5-4
Automatic transmission 5-4
Manual transmission.....5-5
Key positions 5-5
Nissan vehicle immobilizer system (NVIS) (if so equipped).....5-6
Before starting the engine.....5-6
Starting the engine.....5-7
Driving the vehicle.....5-7
Automatic transmission (if so equipped).....5-7
Manual transmission.....5-11
Parking brake 5-13
Cruise control (if so equipped).....5-14
Precautions on cruise control.....5-14
Cruise control operations 5-15
Break-in schedule 5-16
Increasing fuel economy 5-16
Parking/parking on hills.....5-17
Power steering 5-18
Brake system.....5-19
Braking precautions.....5-19
Anti-lock brake system (ABS) (if so equipped).....5-19
Cold weather driving 5-21
Freeing a frozen door lock 5-21
Anti-freeze 5-21
Battery 5-21
Draining of coolant 5-21
Tire equipment.....5-21
Special winter equipment 5-22
Driving on snow or ice.....5-22
Engine block heater (if so equipped) 5-22

PRECAUTIONS WHEN STARTING AND DRIVING

WARNING

- **Do not leave children, impaired adults, or pets alone in your vehicle. They could accidentally injure themselves or others through inadvertent operation of the vehicle. Also, on hot, sunny days, temperatures in a closed vehicle could quickly become high enough to cause severe or possibly fatal injuries to people or animals.**
- **Closely supervise children when they are around cars to prevent them from playing and becoming locked in the trunk where they could be seriously injured. Keep the car locked, with the trunk closed, when not in use, and prevent children's access to car keys.**

EXHAUST GAS (carbon monoxide)

WARNING

- **Do not breathe exhaust gases; they contain colorless and odorless carbon monoxide. Carbon monoxide is dangerous. It can cause unconsciousness or death.**
- **If you suspect that exhaust fumes are entering the vehicle, drive with all windows fully open, and have the vehicle inspected immediately.**
- **Do not run the engine in closed spaces such as a garage.**
- **Do not park the vehicle with the engine running for any extended length of time.**
- **Keep the trunk lid closed while driving, otherwise exhaust gases could be drawn into the passenger compartment. If you must drive with the trunk lid open, follow these precautions.**
  1. **Open all the windows.**
  2. **Set the air recirculation button (if so equipped) to off and the fan control dial to 4 (high) to circulate the air.**
- **If electrical wiring or other cable connections must pass to a trailer through the seal on the trunk lid or the body, follow the manufacturer's recommendation to prevent carbon monoxide entry into the vehicle.**
- **The exhaust system and body should be inspected by a qualified mechanic whenever:**
  a. **The vehicle is raised for service.**
  b. **You suspect that exhaust fumes are entering into the passenger compartment.**
  c. **You notice a change in the sound of the exhaust system.**
  d. **You have had an accident involving damage to the exhaust system, underbody, or rear of the vehicle.**

THREE-WAY CATALYST

The three-way catalyst is an emission control device installed in the exhaust system. Exhaust gases in the three-way catalyst are burned at high temperatures to help reduce pollutants.

⚠ WARNING

- **The exhaust gas and the exhaust system are very hot. Keep people, animals or flammable materials away from the exhaust system components.**
- **Do not stop or park the vehicle over flammable materials such as dry grass, waste paper or rags. They may ignite and cause a fire.**

⚠ CAUTION

- **Do not use leaded gasoline. Deposits from leaded gasoline seriously reduce the three-way catalyst's ability to help reduce exhaust pollutants.**
- **Keep your engine tuned up. Malfunctions in the ignition, fuel injection, or electrical systems can cause overrich fuel flow into the three-way catalyst, causing it to overheat. Do not keep driving if the engine misfires, or if noticeable loss of performance or other unusual operating conditions are detected. Have the vehicle inspected promptly by an authorized NISSAN dealer.**
- **Avoid driving with an extremely low fuel level. Running out of fuel could cause the engine to misfire, damaging the three-way catalyst.**
- **Do not race the engine while warming it up.**
- **Do not push or tow your vehicle to start the engine.**

AVOIDING COLLISION AND ROLLOVER

⚠ WARNING

Failure to operate this vehicle in a safe and prudent manner may result in loss of control or an accident.

Be alert and drive defensively at all times. Obey all traffic regulations. Avoid excessive speed, high speed cornering, or sudden steering maneuvers, because these driving practices could cause you to lose control of your vehicle. **As with any vehicle, loss of control could result in a collision with other vehicles or objects, or cause the vehicle to rollover, particularly if the loss of control causes the vehicle to slide sideways.** Be attentive at all times, and avoid driving when tired. Never drive when under the influence of alcohol or drugs (including prescription or over-the-counter drugs which may cause drowsiness). Always wear your seat belt as outlined in the ''Seats, restraints and supplemental air bag systems'' section of this manual, and also instruct your passengers to do so.

DRINKING ALCOHOL/DRUGS AND DRIVING

⚠ WARNING

Never drive under the influence of alcohol or drugs. Alcohol in the bloodstream reduces coordination, delays reaction time and impairs judgement. Driving after drinking alcohol increases the likelihood of being involved in an accident injuring yourself and others. Additionally, if you are injured in an accident, alcohol can increase the severity of injury.

NISSAN is committed to safe driving. However, you must choose not to drive under

the influence of alcohol. Every year thousands of people are injured or killed in alcohol-related accidents. Although the local laws vary on what is considered to be legally intoxicated, the fact is that alcohol affects all people differently and most people underestimate the effects of alcohol.

Remember, drinking and driving don't mix!

And that is true for drugs, too (over-the-counter, prescription, and illegal drugs). Do not drive if your ability to operate your vehicle is impaired by alcohol, drugs, or some other physical condition.

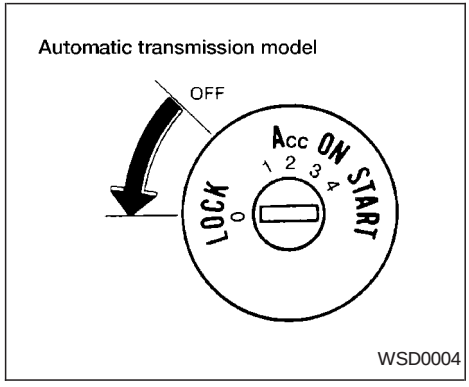

AUTOMATIC TRANSMISSION

On automatic transmission models the ignition lock is designed so the key cannot be turned to LOCK and removed until the shift selector lever is moved to the P (Park) position.

When removing the key from the ignition, make sure the shift selector lever is in the P (Park) position.

When the key cannot be turned to the LOCK position, proceed as follows to remove the key.

1) Move the shift selector lever into the P (Park) position.
2) Turn the ignition key slightly toward the ON position.
3) Turn the key to the LOCK position.
4) Remove the key.

The shift lever is designed so it cannot be moved out of P(Park) and into any of the other gear positions if the ignition key is turned to OFF or if the key is removed from the switch.

The shift selector lever can be moved if the ignition switch is in the ON position and the foot brake pedal is depressed.

There is an OFF position between the LOCK and ACC positions. The OFF position is indicated by a ''1'' on the key cylinder. When the ignition is in OFF, the steering wheel is not locked.

In order for the steering wheel to be locked, it must be turned about 1/8 of a turn clockwise from the straight up position.

To lock the steering wheel, turn the key to the LOCK position. To unlock the steering wheel, insert the key and turn it

gently while rotating the steering wheel slightly right and left.

⚠ WARNING

Never remove or turn the key to the LOCK position while driving. The steering wheel will lock. This may cause the driver to lose control of the vehicle and could result in serious vehicle damage or personal injury.

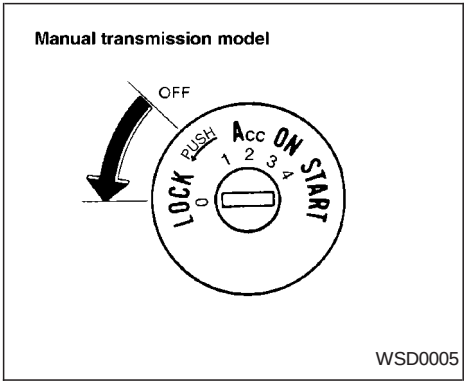

MANUAL TRANSMISSION

The ignition switch includes an anti-theft steering lock device.

The key can be removed only when the ignition switch is in the LOCK position.

On manual transmission models, to turn the ignition key to LOCK from ACC or ON, push in the key, then turn the key to LOCK.

In order for the steering wheel to be locked, it must be turned about 1/8 of a turn clockwise from the straight up position.

To lock the steering wheel, turn the key to the LOCK position. Remove the key. To unlock the steering wheel, insert the key and turn it gently while rotating the steering wheel slightly right and left.

⚠ WARNING

Never remove or turn the key to the LOCK position while driving. The steering wheel will lock. This may cause the driver to lose control of the vehicle and could result in serious vehicle damage or personal injury.

KEY POSITIONS

LOCK: Normal parking position (0)

OFF: (Manual transmission model) (1)

The engine can be turned off without locking the steering wheel.

ACC: (Accessories) (2)

This position activates electrical accessories such as the radio when the engine is not running.

ON: Normal operating position (3)

This position turns on the ignition system and the electrical accessories.

START: (4)

This position activates the starter motor, which starts the engine.

NISSAN VEHICLE IMMOBILIZER SYSTEM (NVIS) (if so equipped)

The Nissan Vehicle Immobilizer System (NVIS) will not allow the engine to start without the use of a registered NVIS key.

If the engine fails to start using a registered NVIS key, it may be due to interference caused by another NVIS key, an automated toll road device or automated payment device on the key ring. Restart the engine using the following procedures:

1. Leave the ignition switch in the ON position for approximately 5 seconds.
2. Turn the ignition switch to the OFF or LOCK position and wait approximately 5 seconds.
3. Repeat step 1 and 2 again.
4. Restart the engine while holding the device (which may have caused the interference) separate from the registered NVIS key.

If this procedure allows the engine to start, NISSAN recommends placing the registered NVIS key on a separate key ring to avoid interference from other devices.

BEFORE STARTING THE ENGINE

- Make sure the area around the vehicle is clear.
- Maintenance items listed here should be checked periodically, for example, each time you check engine oil.
- Check that all windows and lights are clean.
- Visually inspect tires for their appearance and condition. Also check tires for proper inflation.
- Lock all doors.
- Position seat and adjust head restraints.
- Adjust inside and outside mirrors.
- Fasten seat belts and ask all passengers to do likewise.
- Check the operation of warning lights when key is turned to the ON (3) position. See ‘‘Warning/indicator lights and audible reminders’’ in the ‘‘Instrument and controls’’ section.

1. Apply the parking brake.
2. **Automatic transmission:**

   Move the shift selector lever to P (Park) or N (Neutral). (P is recommended.)

   The shift selector lever cannot be moved out of P (Park) and into any of the other gear positions if the ignition key is turned to LOCK or if the key is removed.

   The starter is designed not to operate if the shift selector lever is in one of the driving positions.

   Manual transmission:

   Move the selector lever to N (Neutral), and depress the clutch pedal to the floor.

   The starter is designed to operate only when the clutch pedal is fully depressed.
3. Crank the engine **with your foot off the accelerator pedal** by turning the ignition key to START. Release the key when the engine starts. If the engine starts, but fails to run, repeat the above procedure.

   — If the engine is very hard to start in extremely cold or hot weather, depress and hold the accelerator pedal to help start the engine.

   — In the summer, when restarting the engine within 30 minutes after it has been stopped, keep the accelerator pedal fully depressed while starting.

⚠ CAUTION

Do not operate the starter for more than 15 seconds at a time. If the engine does not start, turn the key off and wait 10 seconds before cranking again, otherwise the starter could be damaged.

4. **Warm-up**

   Allow the engine to idle for at least 30 seconds after starting. Drive at moderate speed for a short distance first, especially in cold weather.

AUTOMATIC TRANSMISSION (if so equipped)

⚠ WARNING

- **Do not depress the accelerator pedal while shifting from P (Park) or N (Neutral) to R (Reverse), D (Drive), 2 or 1. Always depress the brake pedal until shifting is completed. Failure to do so could cause you to lose control and have an accident.**
- **Cold engine idle speed is high, so use caution when shifting into a forward or reverse gear before the engine has warmed up.**
- **Never shift to P (Park) or R (Reverse) while the vehicle is moving. This could cause an accident.**

⚠ CAUTION

- **When stopping the vehicle on an uphill grade, do not hold the vehicle by depressing the accelerator pedal. The foot brake should be used for this purpose.**

- **Do not downshift abruptly on slippery roads. This may cause a loss of control.**

The automatic transmission in your vehicle is electronically controlled to produce maximum power and smooth operation.

The recommended operating procedures for this transmission are shown on the following pages. Follow these procedures for maximum vehicle performance and driving enjoyment.

Starting the vehicle

- After starting the engine, fully depress the foot brake pedal before shifting the shift selector lever to the D (Drive), R (Reverse), 2 or 1 position. Be sure the vehicle is at a complete stop before attempting to shift the shift selector lever.
- Keep the foot brake pedal depressed and shift into a driving gear.
- Release the foot brake, then gradually start the vehicle in motion.

The automatic transmission is designed so the foot brake pedal MUST be depressed before shifting from P (Park) to any drive position while the ignition switch is ON.

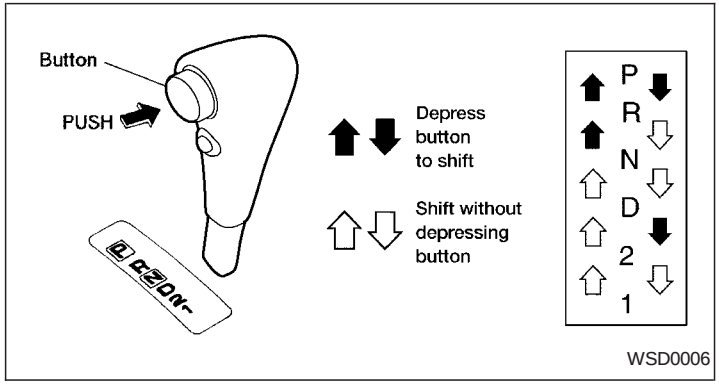

The shift selector lever cannot be moved out of P (Park) and into any of the other gear positions if the ignition key is turned to LOCK or if the key is removed.

The shift selector lever can be moved if the ignition switch is in the ON position and the foot brake pedal is depressed.

Shifting

Push the button to shift into P (Park), R (Reverse) or from D (Drive) to 2. All other positions can be selected without pushing the button.

⚠ WARNING

Apply the parking brake if the selector lever is in any position while the engine is not running. Failure to do so could cause the vehicle to move unexpectedly or roll away and result in serious personal injury or property damage.

P (Park):

Use this selector position when the vehicle is parked or when starting the engine. Always be sure the vehicle is at a complete stop. For maximum safety, depress the brake pedal,

then push in the shift selector lever button and move the lever to the P (Park) position. Apply the parking brake. When parking on a hill, apply the parking brake first, then shift the lever into the P (Park) position.

Shifting from P (Park)

If the ignition switch is in the ON position and the foot brake pedal is depressed, but the shift selector lever still cannot be moved out of P (Park), follow these instructions.

1. Turn the ignition key to the LOCK position.
2. Apply the parking brake.
3. Reinsert the key and turn it to the ACC position.
4. Depress the foot brake pedal and move the shift selector lever to N (Neutral).
5. Start the engine.

These instructions for starting the vehicle in N (Neutral) should only be used until service can be obtained at an authorized NISSAN dealership.

R (Reverse)

Use this position to back up. Always be sure the vehicle is at a complete stop before shifting into the R (Reverse) position. For maximum safety, check to ensure the area behind the vehicle is clear. With the brake pedal depressed, push in the shift selector lever button and move the shift selector lever to the R (Reverse) position.

N (Neutral)

Neither forward nor reverse gear is engaged. The engine can be started in this position. You may shift to N (Neutral) and restart a stalled engine while the vehicle is moving.

D (Drive)

Use this position for all normal forward driving.

2 (Second gear)

Use this position for hill climbing or engine braking on downhill grades.

Do not shift into the 2 position at speeds above 68 MPH (110 km/h). Do not exceed 68 MPH (110 km/h) in the 2 position.

1 (Low gear)

Use this position when climbing steep hills slowly or slow driving through deep snow, sand or mud, or for maximum engine braking on steep downhill grades.

Do not shift into the 1 position at speeds above 34 MPH (55 km/h). Do not exceed 34 MPH (55 km/h) in the 1 position.

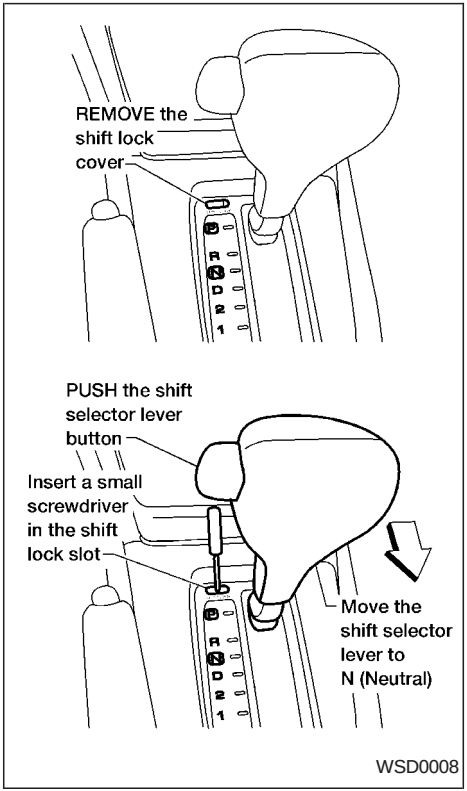

Selector lock release

If the battery is discharged, the shift selector lever may not be moved from the P (Park) position even with the brake pedal depressed and the shift selector lever button pushed.

To move the shift selector lever, release the shift lock and push shift selector lever button. The shift selector lever can be moved to N (Neutral). However, the steering wheel will be locked unless the ignition switch is turned to the ON position.

To release the shift lock, complete the following procedure:

1. Turn the ignition key to the lock position and remove the key
2. Apply the parking brake.
3. Remove the shift lock cover.
4. Insert a small screwdriver in the shift lock slot, and push down.
5. Push the shift selector lever button and move the shift selector lever to N (Neutral) position while holding down the shift lock.

If the shift selector lever cannot be moved out of P (Park), take your vehicle to an authorized NISSAN dealership as soon as possible.

Accelerator downshift in D position

For rapid passing or hill climbing while driving, fully depress the accelerator pedal to the floor. This shifts the transmission down into third gear, second gear or first gear, depending on vehicle speed.

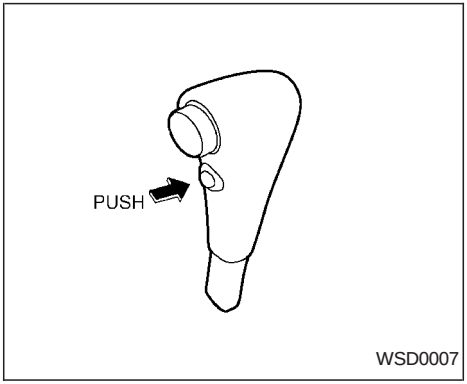

Overdrive Switch

ON: With the engine running and the shift selector lever in the D (Drive) position, the transmission upshifts into OVERDRIVE as vehicle speed increases.

OVERDRIVE does not engage until the engine has reached operating temperature.

OFF: For driving up and down long slopes where engine braking is necessary push the OVERDRIVE switch once. The O/D OFF indicator light in the instrument panel comes on at this time.

When cruising at a low speed or climbing a gentle slope, you may feel uncomfortable shift shocks as the transmission shifts between third gear and overdrive repeatedly. In this case, depress the OVERDRIVE switch to turn the OVERDRIVE off. The O/D OFF indicator light in the instrument panel comes on at this time.

When driving conditions change, depress the overdrive switch to turn the OVERDRIVE on.

Remember not to drive at high speeds for extended periods of time with the OVERDRIVE off. This reduces fuel economy.

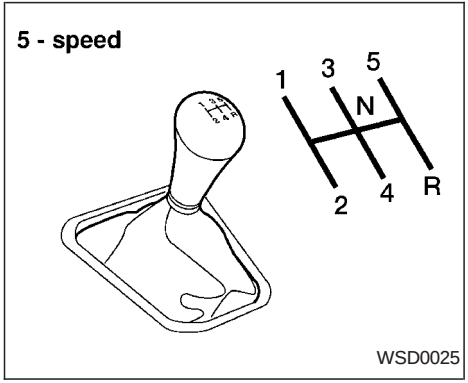

MANUAL TRANSMISSION

⚠ WARNING

- **Do not downshift abruptly on slippery roads. This may cause a loss of control.**
- **Do not over-rev the engine when shifting to a lower gear. This may cause a loss of control or engine damage.**

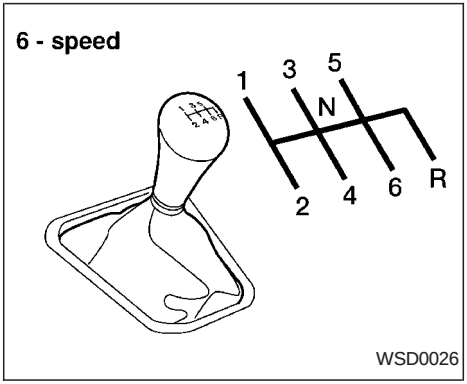

CAUTION

- **Do not rest your foot on the clutch pedal while driving. This may cause clutch damage.**
- **Stop your vehicle completely before shifting into R (Reverse).**
- **When the vehicle is stopped with the engine running (for example, at a stop light), shift to N (Neutral) and release the clutch pedal with the foot brake applied.**

Shifting

To change gears, or when upshifting or downshifting, depress the clutch pedal fully, shift into the appropriate gear, then release the clutch slowly and smoothly.

You cannot shift directly from fifth gear into R (Reverse). First shift into N (Neutral), then into R (Reverse).

If it is difficult to move the selector lever into R (Reverse) or 1 (First), shift into N (Neutral), then release and depress the clutch pedal again and shift into R (Reverse) or 1 (First).

Suggested up-shift speeds

The following are suggested vehicle speeds for shifting into a higher gear. These suggestions relate to fuel economy and vehicle performance. Actual up-shift speeds will vary according to road conditions, the weather and individual driving habits.

For quick acceleration in low altitude areas (less than 4,000 ft [1,219 m]) and normal acceleration in high altitude areas (over 4,000 ft [1,219 m]):

GEAR CHANGE	MPH (km/h)
1st to 2nd	15 (24)
2nd to 3rd	25 (40)
3rd to 4th	40 (64)
4th to 5th	45 (72)

For quick acceleration in high altitude areas (over 4,000 ft [1,219 m]):

For QG18DE engine models:

Gear change	MPH (km/h)
1st to 2nd	15 (25)
2nd to 3rd	35 (55)
3rd to 4th	45 (75)
4th to 5th	50 (80)

For QR25DE engine models: 5-Speed

1st to 2nd	15 (25)
2nd to 3rd	25 (40)
3rd to 4th	40 (65)
4th to 5th	45 (75)

For QR25DE engine models: 6-Speed

1st to 2nd	15 (25)
2nd to 3rd	25 (40)

3rd to 4th	40 (65)
4th to 5th	45 (75)
5th to 6th	50 (80)

Suggested maximum speed in each gear

Downshift to a lower gear if the engine is not running smoothly, or if you need to accelerate.

Do not exceed the maximum suggested speed (shown below) in any gear. For level road driving, use the highest gear suggested for that speed. Always observe posted speed limits, and drive according to the road conditions, which will ensure safe operation. Do not over-rev the engine when shifting to a lower gear as it may cause engine damage or loss of vehicle control.

QG18DE engine models:

GEAR	MPH (km/h)
1st	30 (50)
2nd	55 (90)
3rd	85 (135)
4th & 5th	—

QR25DE engine models: 5-Speed

GEAR	MPH (km/h)
1st	35 (55)
2nd	60 (95)
3rd	85 (135)
4th & 5th	—

QR25DE engine models: 6-Speed

GEAR	MPH (km/h)
1st	25 (45)
2nd	50 (80)
3rd	80 (130)
4th, 5th, 6th	—

⚠ WARNING

- **Be sure the parking brake is fully released before driving. Failure to do so can cause brake failure and lead to an accident.**
- **Do not release the parking brake from outside the vehicle.**
- **Do not use the gear shift in place of the parking brake. When parking, be sure the parking brake is fully engaged.**
- **Do not leave children unattended in a vehicle. They could release the parking brake and cause an accident.**

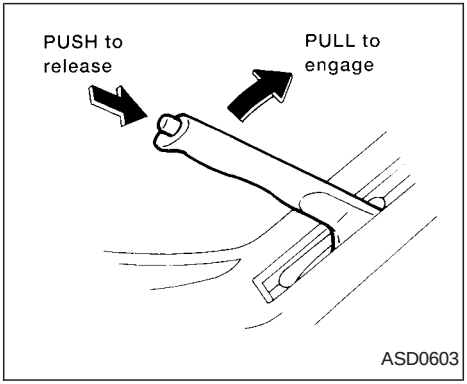

To engage: pull the lever up.

To release:

1. Firmly apply the foot brake.
2. Manual transmission models:
   Place the selector lever in the N (Neutral) position.
   Automatic transmission models:
   Move the shift selector lever to the P (Park) position.
3. While pulling up on the lever slightly, push the button and lower completely.
4. Before driving, be sure the brake warning light goes out.

CRUISE CONTROL (if so equipped)

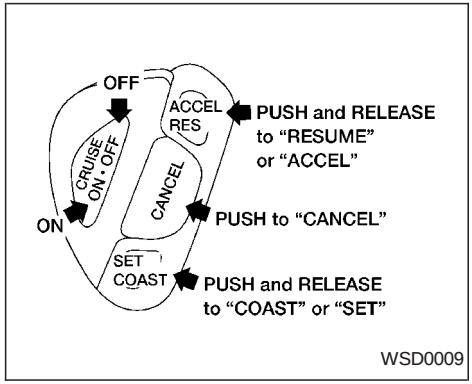

PRECAUTIONS ON CRUISE CONTROL

- If the cruise control system malfunctions, it cancels automatically. The SET light in the instrument panel then blinks to warn the driver.
- If the SET light in the instrument panel blinks, turn the CRUISE ON · OFF switch off and have the system checked by your NISSAN dealer.
- The SET light in the instrument panel may blink when the CRUISE ON · OFF switch is turned ON while pushing the ACCEL/RES, SET/COAST, or CANCEL switch (located on the steering wheel). To properly set the cruise control system, perform the following steps in the order indicated.

⚠ WARNING

Do not use the cruise control when driving under the following conditions:

- **When it is not possible to keep the vehicle at a set speed.**
- **In heavy traffic or in traffic that varies in speed.**
- **On winding or hilly roads.**
- **On slippery roads (rain, snow, ice, etc.).**
- **In very windy areas.**

Doing so could cause a loss of vehicle control and result in an accident.

⚠ CAUTION

On manual transmission models, do not shift into N (Neutral) without depressing the clutch pedal when the cruise control is set. Should this occur,

depress the clutch pedal and turn the main switch off immediately. Failure to do so may cause engine damage.

CRUISE CONTROL OPERATIONS

The cruise control allows driving at a speed between 25 to 90 MPH (40 to 144 km/h) without keeping your foot on the accelerator pedal.

To turn on the cruise control, push the CRUISE ON · OFF switch. The CRUISE indicator light in the instrument panel comes on.

To set cruising speed, accelerate your vehicle to the desired speed, push the COAST/SET switch and release it. The SET light in the instrument panel comes on. Take your foot off the accelerator pedal. Your vehicle maintains the set speed.

- **To pass another vehicle,** depress the accelerator pedal. When you release the pedal, the vehicle returns to the previously set speed.
- The vehicle may not maintain the set speed when going up or down steep hills. If this happens, drive without the cruise control.

To cancel the preset speed, use one of the following three methods.

a) Push the CANCEL button; the SET light in the instrument panel goes out.

b) Tap the brake pedal; the SET light in the instrument panel goes out.

c) Turn the main switch off. Both the CRUISE indicator and SET lights in the instrument panel go out. The preset speed is deleted from memory.

The cruise control will also automatically cancel and the SET light in the instrument panel goes out if:

- you depress the brake pedal while pushing the ACCEL/RES or SET/COAST buttons. The preset speed is deleted from memory.
- the vehicle slows down more than 8 MPH (13 km/h) below the set speed.
- you depress the clutch pedal (manual transmission), or move the shift selector lever to N (Neutral) (automatic transmission).

To reset at a faster cruising speed, use one of the following three methods.

a) Depress the accelerator pedal. When the vehicle attains the desired speed, push and release the SET/COAST switch.

b) Push and hold the ACCEL/RES set switch. When the vehicle attains the speed you desire, release the switch.

c) Push and release the ACCEL/RES set switch. Each time you do this, the set speed increases by about 1 MPH (1.6 km/h).

To reset at a slower cruising speed, use one of the following three methods.

a) Lightly tap the brake pedal. When the vehicle attains the desired speed, push the SET/COAST switch and release it.

b) Push and hold the SET/COAST switch. Release the switch when the vehicle slows down to the desired speed.

c) Push and release the SET/COAST switch. Each time you do this, the set

speed decreases by about 1 MPH (1.6 km/h).

To resume the preset speed, push and release the ACCEL/RES switch. The vehicle returns to the last set cruising speed when the vehicle speed is over 25 MPH (40 km/h).

BREAK-IN SCHEDULE

During the first 1,000 miles (1,600 km), follow these recommendations for the future reliability and economy of your new vehicle.

- Avoid driving for long periods at constant speed, either fast or slow.
- Do not accelerate at full throttle in any gear.
- Avoid quick starts.
- Avoid hard braking as much as possible.
- Do not tow a trailer for the first 500 miles (800 km).

INCREASING FUEL ECONOMY

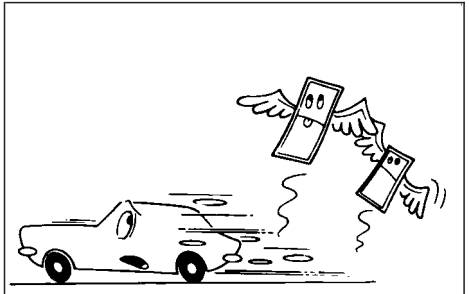

Abrupt starts and stops waste fuel and money.

SD1001M

- Accelerate slowly and smoothly. Maintain cruising speeds with a constant accelerator position.
- Drive at moderate speeds on the highway. Driving at high speed lowers fuel economy.
- Avoid unnecessary stopping and braking. Maintain a safe distance behind other vehicles.
- Use a proper gear range which suits road conditions. On level roads, shift into high gear as soon as possible.
- Avoid unnecessary engine idling.

- Keep your engine tuned up.
- Follow the recommended periodic maintenance schedule.
- Keep the tires inflated to the correct pressure. Low tire pressure increases tire wear and wastes fuel.
- Keep the front wheels in correct alignment. Improper alignment increases tire wear and lowers fuel economy.
- Air conditioner operation lowers fuel economy. Use the air conditioner only when necessary.
- When cruising at highway speeds, it is more economical to use the air conditioner and leave the windows closed to reduce drag.

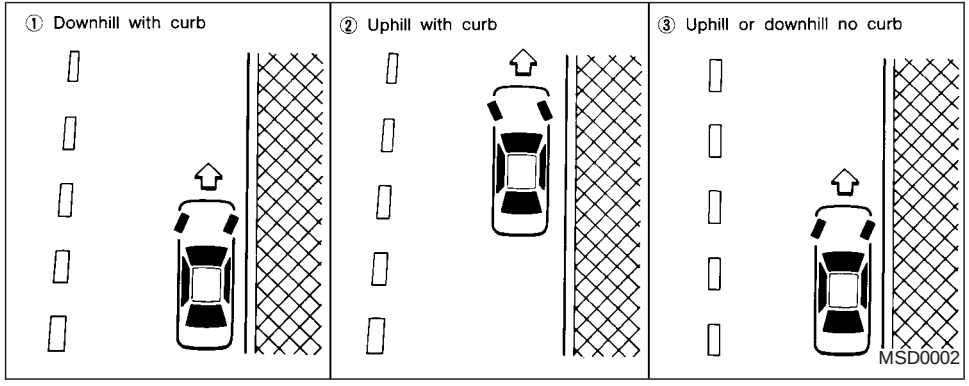

⚠ WARNING

Do not park the vehicle over flammable materials such as dry grass, waste paper or rags. They may ignite and cause a fire.

1. Firmly apply the parking brake.
2. **Manual transmission models:**

   Place the selector lever in the R (Reverse) position. When parking on an uphill grade, place the selector lever in 1 (First) gear.

   Automatic transmission models:

   Move the shift selector lever to the P (Park) position.

⚠ WARNING

- **Safe parking procedures require that both the parking brake be set and the transmission placed into P (Park) for automatic transmission models or in an appropriate gear for manual transmission models. Failure to do so could cause the vehicle to move unexpectedly or roll away and result**

in an accident. Make sure the shift lever has been pushed as far forward as it can go and cannot be moved without depressing the button at the end of the lever.

- **Never leave the engine running while the vehicle is unattended.**
- **Do not leave children unattended inside the vehicle. They could unknowinly activate switches or controls. Unattended children could become involved in serious accidents.**

3. To help prevent the vehicle from rolling into traffic when parked on an incline, it is a good practice to turn the wheels as illustrated.

- HEADED DOWNHILL WITH CURB:①

  Turn the wheels into the curb and move the vehicle forward until the curb side wheel gently touches the curb.

- HEADED UPHILL WITH CURB:②

  Turn the wheels away from the curb and move the vehicle back until the curb side wheel gently touches the curb.

- HEADED UPHILL OR DOWNHILL, NO CURB:③

  Turn the wheels toward the side of the road so the vehicle will move away from the center of the road if it moves.

4. Turn the ignition key to the LOCK position and remove the key.

The power assisted steering is designed to use a hydraulic pump, driven by the engine, to assist steering.

If the engine stops or the drive belt breaks, you will still have control of the vehicle. However, much greater steering effort is needed, especially in sharp turns and at low speeds.

⚠ WARNING

If the engine is not running or is turned off while driving, the power assist for the steering will not work. Steering will be much harder to operate.

The brake system has two separate hydraulic circuits. If one circuit malfunctions, you will still have braking at two wheels.

BRAKING PRECAUTIONS

Vacuum assisted brakes

The brake booster aids braking by using engine vacuum. If the engine stops, you can stop the vehicle by depressing the brake pedal. However, greater foot pressure on the brake pedal will be required to stop the vehicle and stopping distance will be longer.

Using the brakes

Avoid resting your foot on the brake pedal while driving. This overheats the brakes, increases wear on the brake linings and pads, and reduces gas mileage.

To help save the brakes and to prevent the brakes from overheating, reduce speed and downshift to a lower gear before going down a slope or long grade. Overheated brakes may reduce braking performance and could result in loss of vehicle control.

⚠ WARNING

- **While driving on a slippery surface, be careful when braking, accelerating or downshifting. Abrupt braking or accelerating could cause the wheels to skid and result in an accident.**
- **If the engine is not running or is turned off while driving, the power assist for the brakes will not work. Braking will be harder.**

Wet brakes

When the vehicle is washed or driven through water, the brakes may get wet. As a result, your braking distance will be longer and the vehicle may pull to one side during braking.

To dry the brakes, drive the vehicle at a safe speed while lightly pressing the brake pedal to heat up the brakes. Do this until the brakes return to normal. Avoid driving the vehicle at high speeds until the brakes function correctly.

ANTI-LOCK BRAKE SYSTEM (ABS) (if so equipped)

The anti-lock brake system controls the brakes at each wheel so the wheels do not lock when braking abruptly or when braking on slippery surfaces. The system detects the rotation speed at each wheel and varies the brake fluid pressure to prevent each wheel from locking and sliding. By preventing wheel lockup, the system helps the driver maintain steering control and helps to minimize swerving and spinning on slippery surfaces.

Using the system

Depress the brake pedal and hold it down.

⚠ WARNING

Do not pump the brake pedal. Doing so may result in increased stopping distances.

Normal operation

The anti-lock brake system does not operate at speeds below 3 to 6 MPH (5 to 10 km/h). The speeds vary according to road conditions. When the anti-lock system senses that one or more wheels are close to

locking up, the actuator (under the hood) rapidly applies and releases hydraulic pressure (like pumping the brakes very quickly). While the actuator is working, you may feel a pulsation in the brake pedal and hear a noise or vibration from the actuator under the hood. This is normal and indicates that the anti-lock system is working properly. However, the pulsation may indicate that road conditions are hazardous and extra care is required while driving.

Self-test feature

The anti-lock brake system is a sophisticated device with electronic sensors, electric pumps, and hydraulic solenoids controlled by a computer. The computer has a built-in diagnostic feature that tests the system each time you start the engine and move the vehicle at a low speed in forward or reverse. When the self-test occurs, you may hear a ‘‘clunk’’ noise and/or feel a pulsation in the brake pedal. This is normal and is not an indication of any malfunction. If the computer senses any malfunction, it switches the anti-lock brake system OFF and turns on the ABS brake warning light in the dashboard. The brake system then operates normally, but without anti-lock assistance.

If the light comes on during the self-test or while driving, take the vehicle to an authorized NISSAN dealer for repair.

⚠ WARNING

- **The anti-lock brake system is a sophisticated device, but it cannot prevent accidents resulting from careless or dangerous driving techniques. It can help maintain vehicle control during braking on slippery surfaces, but remember that the stopping distance on slippery surfaces will be longer than on normal surfaces, even with the anti-lock brake system. Stopping distances may also be longer on rough, gravel or snow covered roads, or if you are using tire chains. Always maintain a safe distance from the vehicle in front of you. Ultimately, the responsibility for safety of self and others rests in the hands of the driver.**

  Tire type and condition of tires may also affect braking effectiveness.

- **When replacing tires, install the specified tire size on all four wheels.**
- **When installing a spare tire, make sure it is the proper size and type as specified on the tire placard. For tire placard location information, refer to ‘‘Tire placard’’ in the ‘‘Technical and consumer information’’ section of this manual.**
- **For additional information, refer to ‘‘Wheels and tires’’ in the ‘‘Maintenance and do-it-yourself’’ section of this manual.**

FREEING A FROZEN DOOR LOCK

To prevent a door lock from freezing, apply de-icer or glycerin through the key hole. If the lock becomes frozen, heat the key before inserting it in the key hole.

ANTI-FREEZE

In the winter when it is anticipated that the temperature will drop below 32°F (0°C), check the anti-freeze (ethylene glycol base) to assure proper winter protection. For details, see ‘‘Engine cooling system’’ in the ‘‘Maintenance and do-it-yourself’’ section of this manual.

BATTERY

If the battery is not fully charged during extremely cold weather conditions, the battery fluid may freeze and damage the battery. To maintain maximum efficiency, the battery should be checked regularly. For details, see ‘‘Battery’’ in the ‘‘Maintenance and do-it-yourself’’ section of this manual.

DRAINING OF COOLANT

If the vehicle is to be left outside without anti-freeze, drain the cooling system by opening the drain valves located under the radiator and on the engine block. Refill before operating the vehicle. See ‘‘Changing engine coolant’’ in the ‘‘Maintenance and do-it-yourself’’ section of this manual.

TIRE EQUIPMENT

1. SUMMER tires are of a tread design to provide superior performance on dry pavement. However, the performance of these tires will be substantially reduced in snowy and icy conditions. If you operate your vehicle on snowy or icy roads, NISSAN recommends the use of MUD & SNOW or ALL SEASON TIRES on all four wheels. Please consult an authorized NISSAN dealer for the tire type, size, speed rating and availability information.
2. For additional traction on icy roads, studded tires may be used. However, most U.S. states and Canadian provinces prohibit their use. Check local, state and provincial laws before installing studded tires.

Skid and traction capabilities of studded snow tires on wet or dry surfaces may be poorer than that of non-studded snow tires.

3. Tire chains may be used. Make sure they are of proper size for the tires on your vehicle and are installed according to the chain manufacturer’s suggestions.

   Use of tire chains may be prohibited according to location. Check the local laws before installing tire chains. When installing tire chains, make sure they are of proper size for the tires on your vehicle and are installed according to the chain manufacturer’s suggestions. **Use only SAE Class “S” chains.** Other types may damage your vehicle. Use chain tensioners when recommended by the tire chain manufacturer to ensure a tight fit. Loose end links of the tire chain must be secured or removed to prevent the possibility of whipping action damage to the fenders or underbody. If possible, avoid fully loading your vehicle when using tire chains. In addition, drive at a reduced speed. Otherwise, your vehicle may be damaged and/or vehicle handling and performance may be adversely affected.

   Never install tire chains on TEMPORARY USE ONLY spare tires. Do not use tire chains on dry roads.

SPECIAL WINTER EQUIPMENT

It is recommended that the following items be carried in the vehicle during winter:

1. A scraper and stiff-bristled brush to remove ice and snow from the windows and wiper blades.
2. A sturdy, flat board to be placed under the jack to give it firm support.
3. A shovel to dig the vehicle out of snowdrifts.
4. Extra window washer fluid to refill the reservoir tank.

DRIVING ON SNOW OR ICE

⚠ WARNING

- **Wet ice (32°F, 0°C and freezing rain), very cold snow or ice can be slick and very hard to drive on. The vehicle will have much less traction or ‘‘grip’’ under these conditions. Try to avoid driving on wet ice until the road is salted or sanded.**
- **Whatever the condition, drive with caution. Accelerate and slow down with care. If accelerating or downshifting too fast, the drive wheels will lose even more traction.**
- **Allow more stopping distance under these conditions. Braking should be started sooner than on dry pavement.**
- **Allow greater following distances on slippery roads.**
- **Watch for slippery spots (glare ice). These may appear on an otherwise clear road in shaded areas. If a patch of ice is seen ahead, brake before reaching it. Try not to brake while on the ice, and avoid any sudden steering maneuvers.**
- **Do not use cruise control on slippery roads.**
- **Snow can trap dangerous exhaust gases under your vehicle. Keep snow clear of the exhaust pipe and from around your vehicle.**

ENGINE BLOCK HEATER (if so equipped)

An engine block heater to assist extreme cold temperature starting is available through an authorized NISSAN dealer.

⚠ WARNING

Do not use your heater with an ungrounded electrical system or two-pronged (cheater) adapters. You can be injured by an electrical shock if you use an ungrounded connection.

6 In case of emergency

Flat tire 6-2
Changing a flat tire 6-2
Jump starting.....6-8
Push starting 6-10
If your vehicle overheats.....6-10
Towing your vehicle 6-11
Towing recommended by Nissan.....6-12
Vehicle recovery (freeing a stuck vehicle) 6-13

CHANGING A FLAT TIRE

If you have a flat tire, follow the instructions below.

Stopping the vehicle

1. Safely move the vehicle off the road and away from traffic.
2. Turn on the hazard warning flashers.
3. Park on a level surface and apply the parking brake. Shift the manual transmission into R (Reverse), or the automatic transmission into P (Park).
4. Turn off the engine.
5. Raise the hood to warn other traffic, and to signal professional road assistance personnel that you need assistance.
6. Have all passengers get out of the vehicle and stand in a safe place, away from traffic and clear of the vehicle.

⚠ WARNING

- **Make sure the parking brake is securely applied and the manual transmission is shifted into R (Reverse), or the automatic transmission into P (Park).**
- **Never change tires when the vehicle is on a slope, ice or slippery areas. This is hazardous.**
- **Never change tires if oncoming traffic is close to your vehicle. Wait for professional road assistance.**

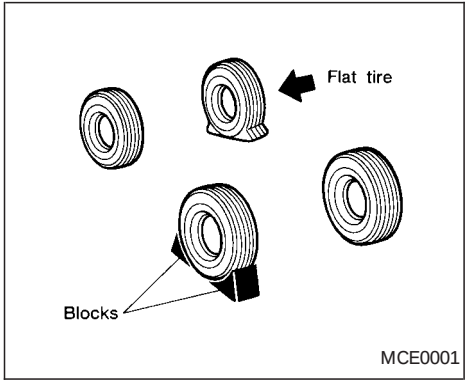

Blocking wheels

Place suitable blocks at both the front and back of the wheel diagonally opposite the flat tire to prevent the vehicle from rolling when it is jacked up.

⚠ WARNING

Be sure to block the wheel as the vehicle may move and result in personal injury.

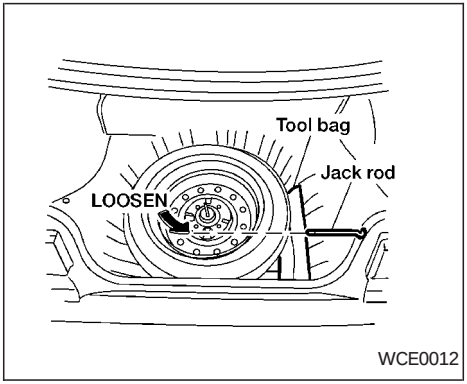

Getting the spare tire and tools

1. Open the trunk. Lift the trunk floor carpeting and spare tire cover. Remove the tool bag (which contains the jack rod and wheel nut wrench) and the spare tire. If necessary, use the flat end of the jack rod as shown to loosen the spare tire hold-down bolt.

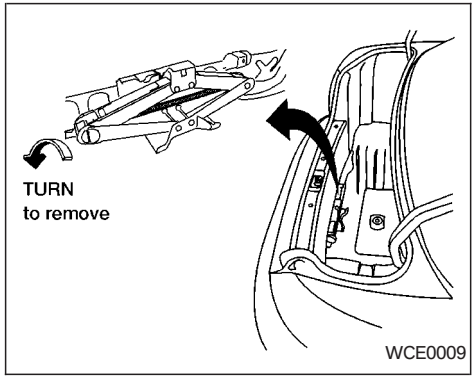

2. To remove the jack, turn the jack screw counterclockwise. Use the tapered end of the jack rod to loosen the jack from its storage position.

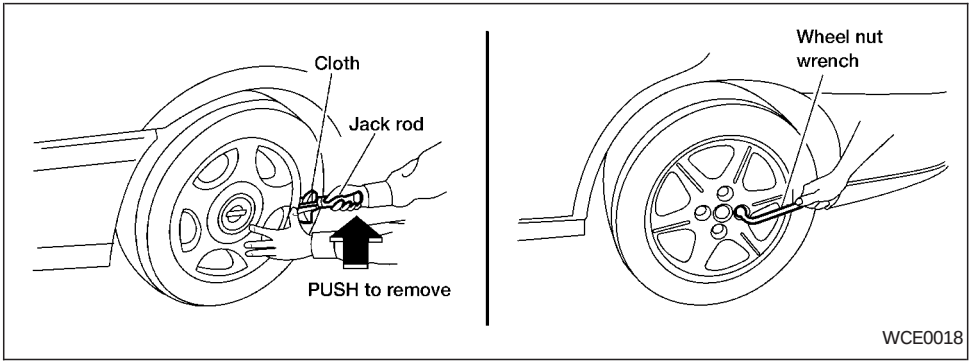

Removing wheel covers

Remove the wheel covers as shown.

⚠ CAUTION

Do not use your hands to pry off wheel caps or wheel covers. Doing so could result in personal injury.

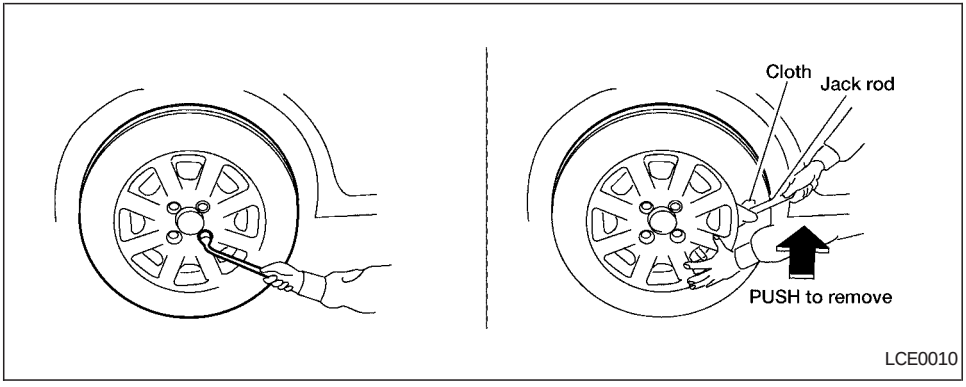

Bolt-on wheel covers

Wheel cover attachment to the wheel is made by one of the wheel lug nuts. This wheel lug nut needs to be removed before the wheel cover can be removed from the wheel.

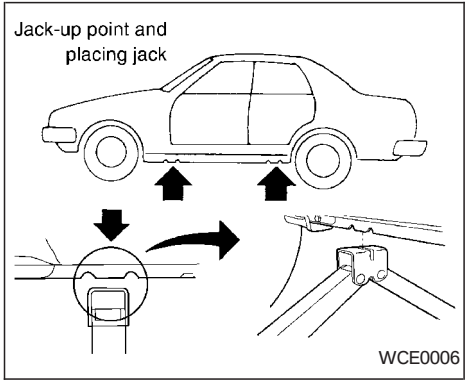

Jacking up vehicle and removing the damaged tire

⚠ WARNING

- **Never get under the vehicle while it is supported only by the jack.**
- **Use only the jack provided with your vehicle. Do not use the jack provided with your vehicle on other vehicles. The jack is designed for lifting only your vehicle during a tire change.**
- **Use the correct jack-up points. Never use any other part of the vehicle for jack support.**

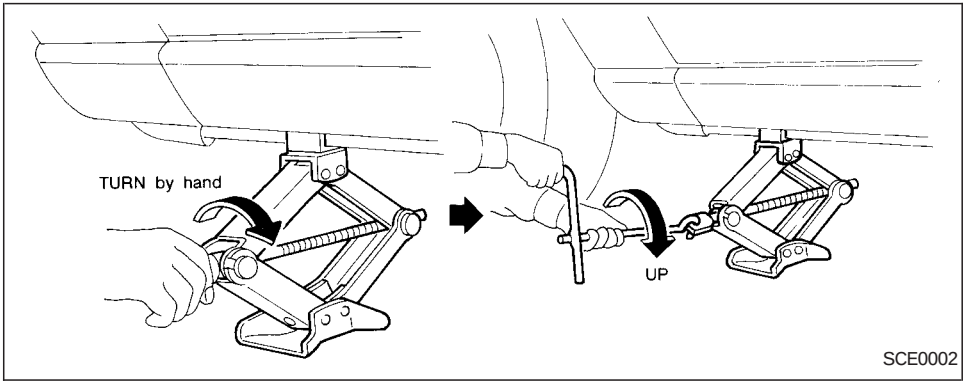

- **Never jack up the vehicle more than necessary.**
- **Never use blocks on or under the jack.**
- **Do not start or run engine while vehicle is on the jack. It may cause the vehicle to move.**
- **Do not allow passengers to stay in the vehicle while it is on the jack.**

- **Never run the engine with a wheel off the ground. It may cause the vehicle to move.**

Carefully read the caution label attached to the jack body and the following instructions.

1. Loosen each wheel nut one or two turns by turning counterclockwise with the wheel nut wrench. **Do not remove the wheel nuts until the tire is off the ground.**
2. Place the jack directly under the jack-up point as illustrated above so the top of the jack contacts the vehicle at the jack-up point. Align the center of the jack head with the notch at the jack-up point, as shown. Also fit the notched portion of the vehicle in the groove of the jack head, as shown.

   The jack should be used on firm and level ground.
3. To lift the vehicle, securely hold the jack lever and rod with both hands as shown. Carefully raise the vehicle until the tire clears the ground. Remove the wheel nuts, and then remove the tire.

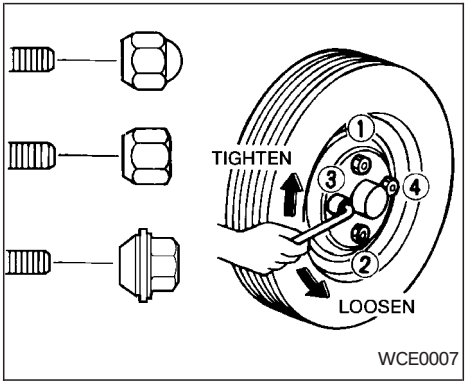

Installing the spare tire

The TEMPORARY USE ONLY spare tire is designed for emergency use. See specific instructions under the heading ‘‘Wheels and tires’’ in the ‘‘Maintenance and do-it- yourself’’ section of this owner’s manual.

1. Clean any mud or dirt from the surface between the wheel and hub.
2. Carefully put the spare tire on and tighten the wheel nuts finger tight.
3. With the wheel nut wrench, tighten wheel nuts alternately and evenly until they are tight.
4. Lower the vehicle slowly until the tire touches the ground. Then, with the wheel nut wrench, tighten the wheel nuts securely in the sequence as illustrated. Lower the vehicle completely.

⚠ WARNING

- **Incorrect wheel nuts or improperly tightened wheel nuts can cause the wheel to become loose or come off. This could cause an accident.**
- **Do not use oil or grease on the wheel studs or nuts. This could cause the nuts to become loose.**
- **Retighten the wheel nuts when the vehicle has been driven for 600 miles (1,000 km) (also in cases of flat tire, etc.).**

As soon as possible, tighten the wheel nuts to the specified torque with a torque wrench.

Wheel nut tightening torque:
80 ft-lb (108 N·m)

The wheel nuts must be kept tightened to specifications at all times. It is recommended that wheel nuts be tightened to specification at each lubrication interval.

Adjust tire pressure to the COLD pressure.

COLD pressure:

After vehicle has been parked for three hours or more or driven less than 1 mile (1.6 km).

COLD tire pressures are shown on the tire placard affixed to the driver’s door center pillar.

5. With the spare tire installed on the vehicle, place the damaged tire in the spare tire storage area. Put the jack rod and wheel nut wrench in the tool bag and place the tool bag in the spare tire storage area.
6. Place the spare tire cover and the trunk floor carpeting over the damaged tire.

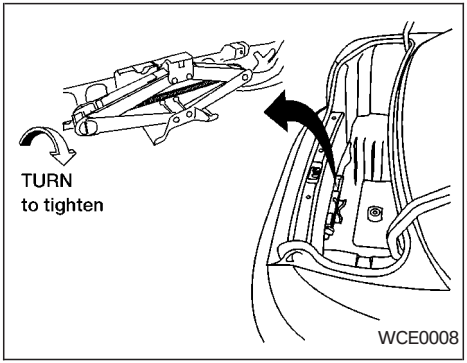

7. Install the jack in its storage area and tighten the jack screw clockwise.
8. Close the trunk.

⚠ WARNING

- **Always make sure that the spare tire and jacking equipment are properly secured after use. Such items can become dangerous projectiles in an accident or sudden stop.**
- **The spare tire is designed for emergency use. See specific instructions under the heading ‘‘Wheels and tires’’ in the ‘‘Maintenance and do-it-yourself’’ section of this manual.**

JUMP STARTING

To start your engine with a booster battery, the instructions and precautions below must be followed.

⚠ WARNING

- **If done incorrectly, jump starting can lead to a battery explosion, resulting in severe injury or death. It could also damage your vehicle.**
- **Explosive hydrogen gas is always present in the vicinity of the battery. Keep all sparks and flames away from the battery.**
- **Do not allow battery fluid to come into contact with eyes, skin, clothing or painted surfaces. Battery fluid is a corrosive sulfuric acid solution which can cause severe burns. If the fluid should come into contact with anything, immediately flush the contacted area with water.**
- **Keep the battery out of the reach of children.**
- **The booster battery must be rated at 12 volts. Use of an improperly rated battery can damage your vehicle.**

- **Whenever working on or near a battery, always wear suitable eye protectors (for example, goggles or industrial safety spectacles) and remove rings, metal bands, or any other jewelry. Do not lean over the battery when jump starting.**
- **Do not attempt to jump start a frozen battery. It could explode and cause serious injury.**
- **Your vehicle has an automatic engine cooling fan. It could come on at any time. Keep hands and other objects away from it.**

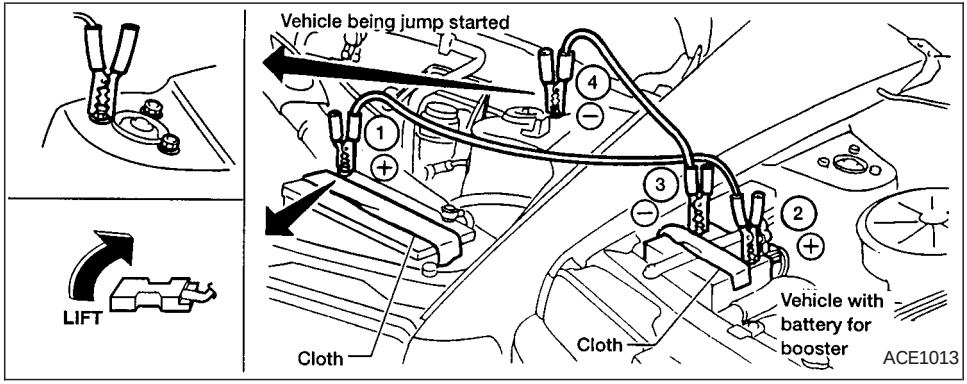

Always follow the instructions below. Failure to do so could result in damage to the charging system and cause personal injury.

1. If the booster battery is in another vehicle, position the two vehicles to bring their batteries into close proximity to each other.

   Do not allow the two vehicles to touch.

2. Apply the parking brake. Move the selector lever to N (Neutral) (on automatic transmission models, move the shift selector lever to P (Park)). Switch off all unnecessary electrical systems (lights, heater, air conditioner, etc.).
3. Cover the battery with an old cloth to reduce explosion hazard.
4. Connect jumper cables in the sequence illustrated.

⚠ CAUTION

- **Always connect positive (+) to positive (+) and negative (−) to body ground (for example, strut mounting bolt, engine lift bracket, etc.) — not to the battery.**

- **Make sure the jumper cables do not touch moving parts in the engine compartment and that the cable clamps do not contact any other metal.**

5. Start the engine of the booster vehicle and let it run for a few minutes.
6. Keep the engine speed of the booster vehicle at about 2,000 rpm, and start the engine of the vehicle being jump started.

⚠ CAUTION

Do not keep the starter motor engaged for more than 10 seconds. If the engine does not start right away, turn the key off and wait 3 to 4 seconds before trying again.

7. After starting the engine, carefully disconnect the negative cable and then the positive cable.
8. Be sure to dispose of the cloth used to cover the vent holes as it may be contaminated with corrosive acid.

PUSH STARTING

⚠ CAUTION

- **Automatic transmission models cannot be push started. This may cause transmission damage.**
- **Three way catalyst equipped models should not be started by pushing. The three way catalyst may be damaged.**
- **Never try to start the vehicle by towing it. When the engine starts, the forward surge could cause the vehicle to collide with the tow vehicle.**

IF YOUR VEHICLE OVERHEATS

If your vehicle is overheating (indicated by an extremely high temperature gauge reading), or if you feel a lack of engine power, detect abnormal noise, etc., take the following steps.

⚠ WARNING

- **Do not continue to drive if your vehicle overheats. Doing so could cause a vehicle fire.**
- **To avoid the danger of being scalded, never remove the radiator cap while the engine is still hot. When the radiator cap is removed, pressurized hot water will spurt out, possibly causing serious injury.**
- **Do not open the hood if steam is coming out.**

1. Move the vehicle safely off the road, apply the parking brake and move the selector lever to N (Neutral) (manual transmission) or the shift selector lever to P (Park) (automatic transmission).

   Do not stop the engine.

2. Turn off the air conditioner. Open all the windows, move the heater or air conditioner temperature control to maximum

hot and fan control to high speed.

3. Get out of the vehicle. Look and listen for steam or coolant escaping from the radiator before opening the hood. Wait until no steam or coolant can be seen before proceeding.
4. Open the hood.

⚠ WARNING

If steam or water is coming from the engine, stand clear to prevent getting burned.

5. Visually check drive belts for damage or looseness. Also check if the cooling fan is running. The radiator hoses and radiator should not leak water. If coolant is leaking, the water pump belt is missing or loose, or the cooling fan does not run, stop the engine.

⚠ WARNING

Be careful not to allow your hands, hair, jewelry or clothing to come into contact with, or get caught in, engine belts or the engine cooling fan. The engine cooling fan can start at any time when the coolant temperature is high.

6. After the engine cools down, check the coolant level in the reservoir tank with the engine running. Add coolant to the reservoir tank if necessary. Have your vehicle repaired at an authorized NISSAN dealer.

When towing your vehicle, all State (Provincial in Canada) and local regulations for towing must be followed. Incorrect towing equipment could damage your vehicle. Towing instructions are available from an authorized NISSAN dealer. Local service operators are generally familiar with the applicable laws and procedures for towing. To assure proper towing and to prevent accidental damage to your vehicle, NISSAN recommends having a service operator tow your vehicle. It is advisable to have the service operator carefully read the following precautions:

⚠ WARNING

- **Never ride in a vehicle that is being towed.**
- **Never get under your vehicle after it has been lifted by a tow truck.**

⚠ CAUTION

- **When towing, make sure that the transmission, axles, steering system and powertrain are in working condition. If any unit is damaged, dollies must be used.**

- **Always attach safety chains before towing.**

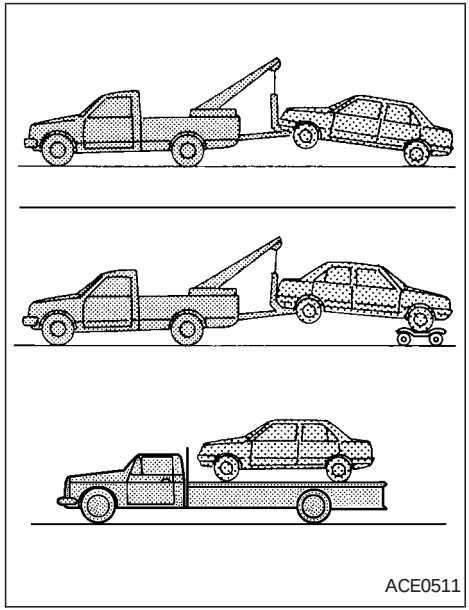

TOWING RECOMMENDED BY NISSAN

NISSAN recommends that your vehicle be towed with the driving (front) wheels off the ground or place the vehicle on a flat bed truck as illustrated.

⚠ CAUTION

- **Never tow automatic transmission models with the front wheels on the ground or four wheels on the ground (forward or backward), as this may cause serious and expensive damage to the transmission. If it is necessary to tow the vehicle with the rear wheels raised, always use towing dollies under the front wheels.**
- **When towing automatic transmission models with the front wheels on towing dollies, or when towing manual transmission models with the front wheels on the ground:**
  - **Turn the ignition key to the OFF position, and secure the steering wheel in a straight ahead position with a rope or similar device. Never secure the steering wheel by turning the ignition key to the LOCK position. This may damage the steering lock mechanism.**
  - **Move the shift lever to the N (Neutral) position.**

When towing automatic or manual transmission models with the rear wheels on the ground (if you do not use towing dollies): Always release the parking brake.

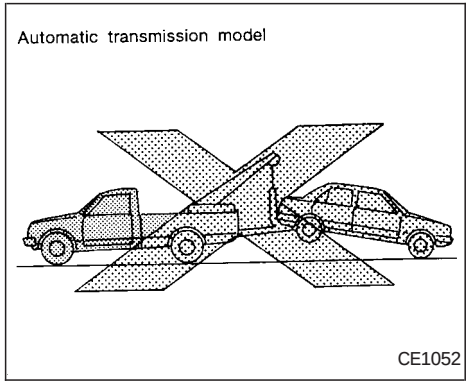

VEHICLE RECOVERY (freeing a stuck vehicle)

- Tow chains or cables must be attached only to the main structural members of the vehicle.
- Pulling devices should be routed so they do not touch any part of the suspension, steering, brake or cooling systems.
- Always pull the cable straight out from the front or rear of the vehicle. Never pull the vehicle at an angle.
- Pulling devices such as ropes or canvas straps are not recommended for use in vehicle towing or recovery.
- Stand clear of a stuck vehicle.

⚠ WARNING

Do not spin your tires at high speed. This could cause them to explode and result in serious injury. Parts of your vehicle could also overheat and be damaged.

MEMO

7 Appearance and care

Cleaning exterior 7-2
Washing.....7-2
Waxing.....7-2
Removing spots.....7-3
Underbody 7-3
Glass.....7-3
Aluminum alloy wheels.....7-3
Chrome parts.....7-3
Cleaning interior 7-4
Seat belts 7-5
Corrosion protection.....7-5
Most common factors contributing to vehicle corrosion.....7-5
Environmental factors influence the rate of corrosion.....7-5
To protect your vehicle from corrosion 7-5

CLEANING EXTERIOR

In order to maintain the appearance of your vehicle, it is important to take proper care of it.

In the following cases, please wash your vehicle as soon as possible to protect the paint surface:

- after a rainfall to prevent possible damage from acid rain.
- after driving on coastal roads.
- when contaminants such as soot, bird droppings, tree sap, metal particles or bugs get on the paint surface.
- when dust or mud builds up on the paint surface.

Whenever possible, store or park your vehicle inside a garage or in a covered area.

When it is necessary to park outside, park in a shady area or protect the vehicle with a body cover.

Be careful not to scratch the paint surface when putting on or removing the body cover.

WASHING

Wash dirt off with a wet sponge and plenty of water. Clean the vehicle thoroughly using a mild soap, a special vehicle soap or general purpose dishwashing liquid mixed with clean, lukewarm (never hot) water.

⚠ CAUTION

- **Do not wash the vehicle with strong household soap, strong chemical detergents, gasoline or solvents.**
- **Do not wash the vehicle in direct sunlight or while the vehicle body is hot, as the surface may become water-spotted.**
- **Avoid using tight-napped or rough cloths such as washing mitts. Care must be taken when removing caked-on dirt or other foreign substances so that the paint surface is not scratched or damaged.**

Rinse the vehicle thoroughly with plenty of clean water.

Inside flanges, seams and folds on the doors, hatches and hood are particularly vulnerable to the effects of road salt. Therefore, these areas must be cleaned regularly. Take care that the drain holes in the lower edge of the door are open. Spray water under the body and in the wheel wells to loosen the dirt and wash away road salt.

A damp chamois can be used to dry the vehicle to avoid water spots.

WAXING

Regular waxing protects the paint surface and helps retain new vehicle appearance. After waxing, polishing is recommended to remove built-up residue and to avoid a ‘‘weathered’’ appearance.

An authorized NISSAN dealer can assist

you in choosing the proper product.

- Wax your vehicle only after a thorough washing. Follow the instructions supplied with the wax.
- Do not use a wax containing any abrasives, cutting compounds or cleaners that may damage the vehicle finish.
- If the surface does not polish easily, use a “road tar” remover and wax again.

Machine compounding or aggressive polishing on a base coat/clear coat paint finish may dull the finish or leave swirl marks.

Only use black wax or black shoe polish on black urethane or polypropylene bumpers.

REMOVING SPOTS

Remove tar and oil spots, industrial dust, insects, and tree sap as quickly as possible from the surface of the paint to avoid lasting damage or staining. Special cleaning products are available at an authorized NISSAN dealer or any automotive accessory store.

UNDERBODY

In areas where road salt is used in winter, the underbody must be cleaned regularly. This prevents dirt and salt from building up and causing the acceleration of underbody and suspension corrosion. Before winter and again in the spring, the underseal must be checked and, if necessary, re-treated.

GLASS

Use glass cleaner to remove smoke and dust film from the glass surfaces. It is normal for glass to become coated with a film after the vehicle is parked in the hot sun. Glass cleaner and a soft cloth easily remove this film.

⚠ CAUTION

When cleaning the inside of the windows, do not use sharp-edged tools, abrasive cleaners or chlorine based disinfectant cleaners. They could damage the electrical conductors, radio antenna elements or rear window defogger elements.

ALUMINUM ALLOY WHEELS

Wash the wheels regularly, especially during winter months in areas where road salt is used. If not removed, road salt could discolor the wheels.

CHROME PARTS

Clean all chrome parts regularly with a non-abrasive chrome polish to maintain the finish.

Occasionally remove loose dust from the interior trim, plastic parts and seats using a vacuum cleaner or soft brush. Wipe the vinyl and leather surfaces with a clean, soft cloth dampened in mild soap solution, then wipe clean with a dry soft cloth. Before using any fabric protector, read the manufacturer's recommendations. Some fabric protectors contain chemicals that may stain or bleach the seat material.

Use a cloth dampened only with water, to clean the meter and gauge lens.

⚠ CAUTION

- **Never use benzine, thinner, or any similar material.**
- **Never use fabric protectors unless recommended by the manufacturer.**
- **Do not use glass or plastic cleaner on meter or gauge lens covers. It may damage the lens cover.**

Floor mats

The use of genuine NISSAN floor mats can extend the life of your vehicle carpet and make it easier to clean the interior. **No matter what mats are used, be sure they are fitted for your vehicle and are properly positioned in the footwell to prevent interference with pedal operation.** Mats should be maintained with regular cleaning and replaced if they become excessively worn.

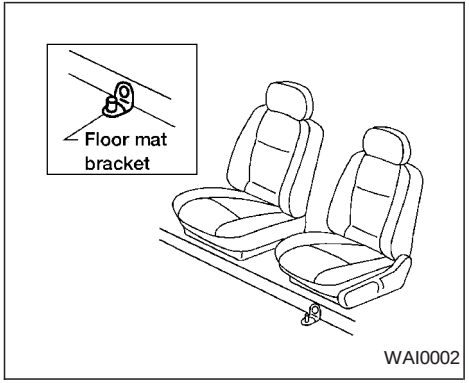

Floor mat positioning aid

All models include front floor mat brackets to act as a floor mat positioning aid. NISSAN floor mats have been specially designed for your vehicle model. The floor mat has a grommet hole incorporated in it. Position the mat by placing the floor mat bracket hook through the floor mat grommet hole while centering the mat in the footwell.

Periodically check to make certain the mats are properly positioned.

SEAT BELTS

The seat belts can be cleaned by wiping them with a sponge dampened in a mild soap solution. Allow the belts to dry completely in the shade before using them. See ‘‘Seat belt maintenance’’ in the ‘‘Seats, restraints and supplemental air bag systems’’ section of this owner’s manual.

⚠ WARNING

Do not allow wet seat belts to roll up in the retractor. NEVER use bleach, dye, or chemical solvents to clean the seat belts, since these materials may severely weaken the seat belt webbing.

MOST COMMON FACTORS CONTRIBUTING TO VEHICLE CORROSION

1. The accumulation of moisture-retaining dirt and debris in body panel sections, cavities, and other areas.
2. Damage to paint and other protective coatings caused by gravel and stone chips or minor traffic accidents.

ENVIRONMENTAL FACTORS INFLUENCE THE RATE OF CORROSION

Moisture

Accumulation of sand, dirt and water on the vehicle body underside can accelerate corrosion. Wet floor coverings will not dry completely inside the vehicle, and should be removed for drying to avoid floor panel corrosion.

Relative humidity

Corrosion will be accelerated:

- in areas of high relative humidity.
- in areas where the temperatures stay above freezing.
- where atmospheric pollution exists.
- where road salt is used.

Temperature

High temperatures accelerate the rate of corrosion to those parts which are not well ventilated.

Air pollution

Industrial pollution, the presence of salt in the air in coastal areas, or heavy road salt use accelerates the corrosion process. Road salt also accelerates the disintegration of paint surfaces.

TO PROTECT YOUR VEHICLE FROM CORROSION

- wash and wax your vehicle often to keep the vehicle clean.
- always check for minor damage to the paint and repair it as soon as possible.
- keep drain holes at the bottom of the doors open to avoid water accumulation.
- check the underbody for accumulation of

sand, dirt or salt. If present, wash with water as soon as possible.

⚠ CAUTION

- **NEVER remove dirt, sand or other debris from the passenger compartment by washing it out with a hose. Remove dirt with a vacuum cleaner or broom.**
- **Never allow water or other liquids to come in contact with electronic components inside the vehicle as this may damage them.**

Chemicals used for road surface de-icing are extremely corrosive. They accelerate corrosion and deterioration of underbody components such as the exhaust system, fuel and brake lines, brake cables, floor pan and fenders.

In winter, the underbody must be cleaned periodically.

For additional protection against rust and corrosion, which may be required in some areas, consult an authorized NISSAN dealer.

MEMO

8 Maintenance and do-it-yourself

Maintenance requirements....8-2
General maintenance....8-3
Explanation of general maintenance items....8-3
Maintenance precautions....8-5
Engine compartment check locations - QG engine....8-7
Engine compartment check locations - QR engine....8-8
Engine cooling system....8-9
Checking engine coolant level....8-9
Changing engine coolant....8-10
Engine oil....8-12
Checking engine oil level....8-12
Changing engine oil....8-13
Changing engine oil filter....8-14
Automatic transmission fluid....8-15
Temperature conditions for checking....8-16
Power steering fluid....8-17
Brake and clutch fluid....8-18
Brake fluid....8-18
Clutch fluid....8-18
Window washer fluid....8-19
Battery....8-19
Jump starting....8-21
Drive belts....8-22
Spark plug....8-23
Replacing spark plugs....8-23
Air cleaner....8-24
Cabin air filter (if so equipped)....8-24
Windshield wiper blades....8-28
Cleaning....8-28
Replacing....8-28
Parking brake and brake pedal....8-29
Checking park brake....8-29
Checking brake pedal....8-30
Brake booster....8-30
Clutch pedal....8-31
Checking clutch pedal....8-31
Fuses....8-31
Engine compartment....8-31
Passenger compartment....8-34
Keyfob battery replacement....8-35
Lights....8-36

Headlights.....8-36
Fog lights (if so equipped).....8-39
Exterior and interior lights 8-40
Wheels and tires 8-43
Tire pressure 8-43
Types of tires.....8-44
Tire chains.....8-45
Changing wheels and tires.....8-45

MAINTENANCE REQUIREMENTS

Your new NISSAN has been designed to have minimum maintenance requirements with longer service intervals to save you both time and money. However, some day-to-day and regular maintenance is essential to maintain your NISSAN's good mechanical condition, as well as its emission and engine performance.

It is the owner's responsibility to make sure that the scheduled maintenance, as well as general maintenance, is performed.

As the vehicle owner, you are the only one who can ensure that your vehicle receives proper maintenance. You are a vital link in the maintenance chain.

Scheduled maintenance

For your convenience, both required and optional scheduled maintenance items are described and listed in your ''NISSAN Service and Maintenance Guide.'' You must refer to that guide to ensure that necessary maintenance is performed on your Nissan at regular intervals.

General maintenance

General maintenance includes those items which should be checked during normal day-to-day operation of the vehicle. They are essential if your vehicle is to continue to operate properly. It is your responsibility to perform these maintenance procedures regularly as prescribed.

Performing general maintenance checks require minimal mechanical skill and only a few general automotive tools.

These checks or inspections can be done by yourself, a qualified technician or, if you prefer, an authorized NISSAN dealer.

Where to go for service

If maintenance service is required or your vehicle appears to malfunction, have the systems checked and tuned by an authorized NISSAN dealer.

NISSAN technicians are well-trained specialists who and are kept up-to-date with the latest service information through technical bulletins, service tips, and in-dealership training programs. They are completely qualified to work on NISSAN vehicles **before** they work on your vehicle, rather than after they have worked on it.

You can be confident that an authorized NISSAN dealer's service department performs the best job to meet the maintenance requirements on your vehicle — in a reliable and economic way.

GENERAL MAINTENANCE

During the normal day-to-day operation of the vehicle, general maintenance should be performed regularly as prescribed in this section. If you detect any unusual sounds, vibrations or smells, be sure to check for the cause or have an authorized NISSAN dealer do it promptly. In addition, you should notify an authorized NISSAN dealer if you think that repairs are required.

When performing any checks or maintenance work, closely observe the ‘‘Maintenance precautions’’ later in this section.

EXPLANATION OF GENERAL MAINTENANCE ITEMS

Additional information on the following items with ‘‘*’’ is found later in this section.

Outside the vehicle

The maintenance items listed here should be performed from time to time, unless otherwise specified.

Tires* Check the pressure with a gauge at least once a month and always prior to long distance trips, including the spare, and adjust to the specified pressure if necessary. Check carefully for damage, cuts or excessive wear.

Wheel nuts* When checking the tires, make sure no wheel nuts are missing, and check for any loose wheel nuts. Tighten if necessary.

Tire rotation* Tires should be rotated every 7,500 miles (12,000 km).

Wheel alignment and balance If the vehicle should pull to either side while driving on a straight and level road, or if you detect uneven or abnormal tire wear, there may be a need for wheel alignment.

If the steering wheel or seat vibrates at normal highway speeds, wheel balancing may be needed.

- For additional information regarding tires, refer to ‘‘Important Tire Safety Information’’ in the Warranty Information Booklet (US) or ‘‘Tire Safety Information’’ in the Warranty and Roadside Assistance Information booklet (Canada).

Windshield Clean the windshield on a regular basis. Check the windshield at least every six months for cracks or other damage. Have a damaged windshield repaired by a qualified repair facility.

Windshield wiper blades* Check for cracks or wear if they do not wipe properly.

Doors, hood and tailgate Check that the doors, hood and tailgate operate properly. Also ensure that all latches lock securely. Lubricate hinges, latches, latch pins, rollers and links as necessary. Make sure that the secondary latch keeps the hood from opening when the primary latch is released.

When driving in areas using road salt or other corrosive materials, check lubrication frequently.

Lights* Clean the headlights on a regular basis. Make sure that the headlights, stop lights, tail lights, turn signal lights, and other lights are all operating properly and installed securely. Also check headlight aim.

Inside the vehicle

The maintenance items listed here should be checked on a regular basis, such as when performing periodic maintenance, cleaning the vehicle, etc.

Additional information on the following items with an ‘‘*’’ is found later in this section.

Warning lights and chimes Make sure all

warning lights and chimes are operating properly.

Windshield wiper and washer* Check that the wipers and washer operate properly and that the wipers do not streak.

Windshield defroster Check that the air comes out of the defroster outlets properly and in sufficient quantity when operating the heater or air conditioner.

Steering wheel Check for changes in the steering conditions, such as excessive free-play, hard steering or strange noises.

Seats Check seat position controls such as seat adjusters, seatback recliner, etc. to ensure they operate smoothly and all latches lock securely in every position. Check that the head restraints move up and down smoothly and the locks (if so equipped) hold securely in all latched positions.

Seat belts Check that all parts of the seat belt system (e.g., buckles, anchors, adjusters and retractors) operate properly and smoothly, and are installed securely. Check the belt webbing for cuts, fraying, wear or damage.

Accelerator pedal Check the pedal for smooth operation and make sure the pedal does not catch or require uneven effort. Keep the floor mat away from the pedal.

Clutch pedal* Make sure the pedal operates smoothly and check that it has the proper free travel.

Brakes Check that the brakes do not pull the vehicle to one side when applied.

Brake pedal and booster* Check the pedal for smooth operation and make sure it has the proper distance under it when depressed fully. Check the brake booster function. Be certain to keep the floor mat away from the pedal.

Parking brake* Check that the lever has the proper travel and confirm that your vehicle is held securely on a fairly steep hill with only the parking brake applied.

Automatic transmission P (Park) position mechanism Check that the lock release button on the selector lever operates properly and smoothly. On a fairly steep hill check that your vehicle is held securely with the selector lever in the P position without applying any brakes.

Under the hood and vehicle

The maintenance items listed here should be checked periodically (e.g., each time you check the engine oil or refuel).

Additional information on the following items with an ‘‘*’’ is found later in this section.

Windshield washer fluid* Check that there is adequate fluid in the reservoir.

Engine oil level* Check the level after parking the vehicle on a level surface with the engine off. Wait a few minutes for the oil to drain back into the oil pan.

Brake and clutch fluid levels* Make sure that the brake and clutch fluid level is between the MIN and MAX lines on the reservoir.

Power steering fluid level* and lines Check the level when the fluid is cold, with the engine off. Check the lines for proper attachment, leaks, cracks, etc.

Automatic transmission fluid level* Check the level after putting the selector lever in P with the engine idling at operating temperature.

Engine coolant level* Check the coolant level when the engine is cold.

Radiator and hoses Check the front of the radiator and clean off any dirt, insects, leaves, etc., that may have accumulated. Make sure the hoses have no cracks, deformation, rot or loose connections.

Engine drive belts* Make sure the drive belts are not frayed, worn, cracked or oily.

Battery* Check the fluid level in each cell. It should be between the MAX and MIN lines. Vehicles operated in high temperatures or under severe conditions require frequent checks of the battery fluid level.

Exhaust system Make sure there are no loose supports, cracks or holes. If the sound of the exhaust seems unusual or there is a smell of exhaust fumes, immediately have the exhaust system inspected by an authorized NISSAN dealer. See the carbon monoxide warning in the ‘‘Starting and driving’’ section of this manual.

Underbody The underbody is frequently exposed to corrosive substances such as those used on icy roads or to control dust. It is very important to remove these substances from the underbody, otherwise rust may form on the floor pan, frame, fuel lines and exhaust system. At the end of winter, the underbody should be thoroughly flushed with plain water, in those areas where mud and dirt may have accumulated. See the ‘‘Appearance and care’’ section of this manual.

Fluid leaks Check under the vehicle for fuel, oil, water or other fluid leaks after the vehicle has been parked for a while. Water dripping from the air conditioner after use is normal. If you should notice any leaks or if gasoline fumes are evident, check for the cause and have it corrected immediately.

MAINTENANCE PRECAUTIONS

When performing any inspection or maintenance work on your vehicle, always take care to prevent serious accidental injury to yourself or damage to the vehicle. The following are general precautions which should be closely observed.

⚠ WARNING

- **Park the vehicle on a level surface, apply the parking brake securely and block the wheels to prevent the vehicle from moving. For manual transmission models, move the shift lever to N (Neutral). For automatic transmission models, move the shift selector lever to P (Park).**
- **Be sure the ignition key is in the OFF or LOCK position when performing any parts replacement or repairs.**
- **Your vehicle is equipped with an automatic engine cooling fan. It may come on at any time without warning, even if the ignition key is in the OFF position and the engine is not running. To avoid injury, always disconnect the negative battery cable before working near the fan.**

- **If you must work with the engine running, keep your hands, clothing, hair and tools away from moving fans, belts and any other moving parts.**
- **It is advisable to secure or remove any loose clothing and remove any jewelry, such as rings, watches, etc., before working on your vehicle.**
- **Always wear eye protection whenever you work on your vehicle.**
- **If you must run the engine in an enclosed space such as a garage, be sure there is proper ventilation for exhaust gases to escape.**
- **Never get under the vehicle while it is supported only by a jack. If it is necessary to work under the vehicle, support it with safety stands.**
- **Keep smoking materials, flame and sparks away from the fuel tank and battery.**

- **On gasoline engine models with the multiport fuel injection (MFI) system, the fuel filter or fuel lines should be serviced by an authorized NISSAN dealer because the fuel lines are under high pressure even when the engine is off.**

⚠ CAUTION

- **Do not work under the hood while the engine is hot. Turn the engine off and wait until it cools down.**
- **Never connect or disconnect the battery or any transistorized component while the ignition switch is in the ON position.**
- **Never leave the engine or automatic transmission related component harnesses disconnected while the ignition switch is in the ON position.**

- **Avoid contact with used engine oil and coolant. Improperly disposed engine oil, engine coolant, and/or other vehicle fluids can damage the environment. Always conform to local regulations for disposal of vehicle fluid.**

This ‘‘Maintenance and do-it-yourself’’ section gives instructions regarding only those items which are relatively easy for an owner to perform.

A genuine NISSAN service manual is also available. See ‘‘Owner’s Manual/Service Manual order information’’ in the ‘‘Technical and consumer information’’ section.

You should be aware that incomplete or improper servicing may result in operating difficulties or excessive emissions, and could affect your warranty coverage. **If in doubt about any servicing, have it done by an authorized NISSAN dealer.**

ENGINE COMPARTMENT CHECK LOCATIONS - QG ENGINE

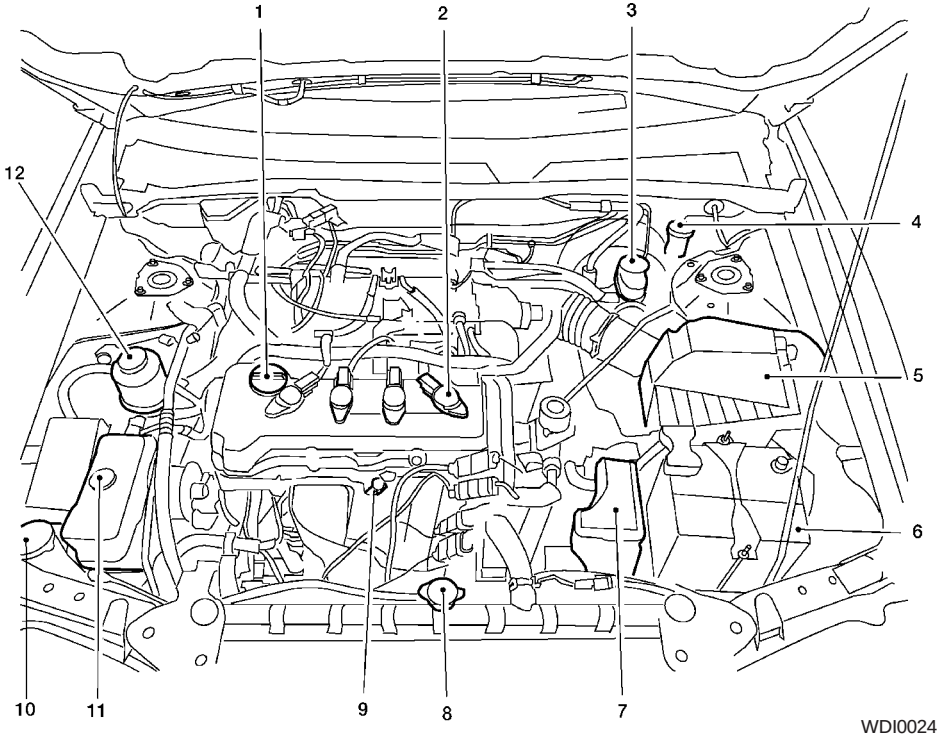

1. Engine oil filler cap
2. Spark plug caps
3. Brake fluid reservoir
4. Clutch fluid reservoir (M/T model)
5. Air Cleaner
6. Battery
7. Fuse/Fusible link holds
8. Radiator cap
9. Engine oil dipstick
10. Windshield washer fluid reservoir
11. Coolant reservoir
12. Power steering fluid reservoir

* Engine cover removed for clarity

ENGINE COMPARTMENT CHECK LOCATIONS - QR ENGINE

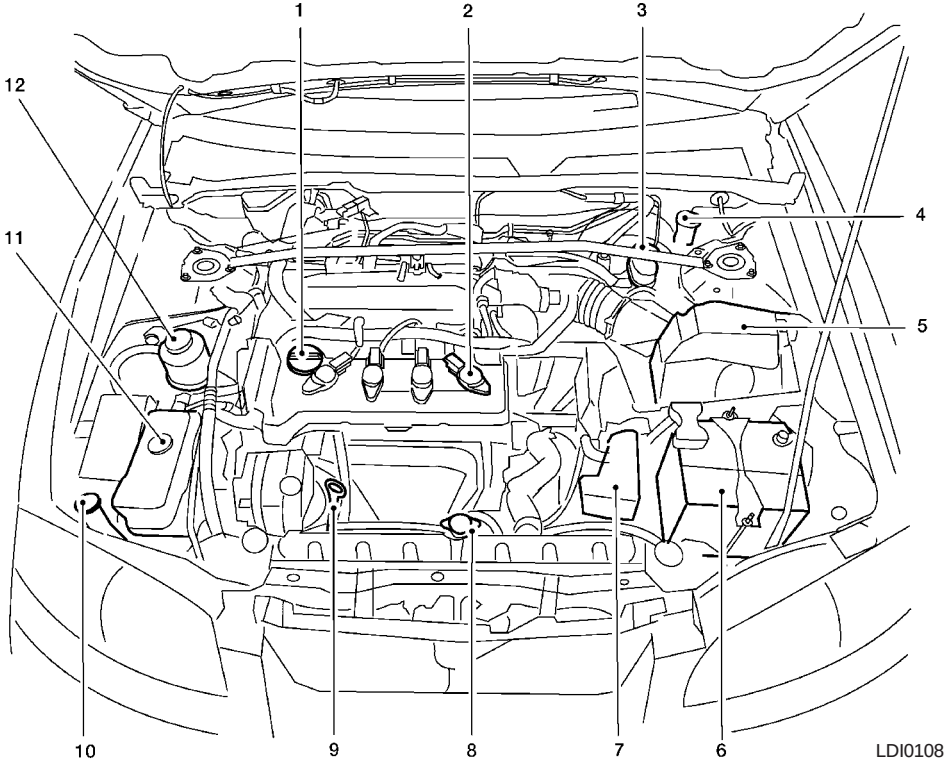

1. Engine oil filler cap
2. Spark plug caps
3. Brake fluid reservoir
4. Clutch fluid reservoir (M/T model)
5. Air Cleaner
6. Battery
7. Fuse/Fusible link holds
8. Radiator cap
9. Engine oil dipstick
10. Windshield washer fluid reservoir
11. Coolant reservoir
12. Power steering fluid reservoir

*Engine cover removed for clarity

ENGINE COOLING SYSTEM

The engine cooling system is filled at the factory with a high-quality, year-round, anti-freeze coolant solution. The anti-freeze solution contains rust and corrosion inhibitors; therefore, additional engine cooling system additives are not necessary.

⚠ CAUTION

When adding or replacing coolant, be sure to use only an ethylene glycol anti-freeze with the proper mixture ratio of 50% Genuine Nissan Anti-freeze coolant or equivalent and 50% demineralized or distilled water. The use of other types of coolant solutions may damage the engine cooling system.

Outside temperature down to		Genuine NISSAN Anti-freeze coolant or equivalent	Demineralized or distilled water
°C	°F		
−35	−30	50%	50%

⚠ WARNING

- **Never remove the radiator cap when the engine is hot. Serious burns could be caused by high pressure fluid escaping from the radiator.**
- **The radiator is equipped with a pressure type radiator cap. To prevent engine damage, use only a genuine NISSAN radiator cap.**

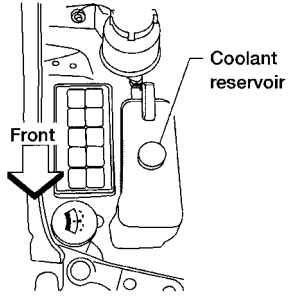

ADI1137

CHECKING ENGINE COOLANT LEVEL

Check the coolant level in the reservoir tank when the engine is cold. If the coolant level is below MIN, add coolant up to the MAX level. If the reservoir tank is empty, check the coolant level in the radiator **when the engine is cold.** If there is insufficient coolant in the radiator, fill the radiator with coolant up to the filler opening and also add it to the reservoir tank up to the MAX level.

If the cooling system frequently requires coolant, have it checked by an authorized NISSAN dealer.

CHANGING ENGINE COOLANT

- Major cooling system repairs should be performed by an authorized NISSAN dealer. The service procedures can be found in the NISSAN Service Manual.
- Improper servicing can result in reduced heater performance and engine overheating.

⚠ WARNING

- **To avoid the danger of being scalded, never change the coolant when the engine is hot.**
- **Never remove the radiator cap when the engine is hot. Serious burns could be caused by high pressure fluid escaping from the radiator.**
- **Avoid direct skin contact with used coolant. If skin contact is made, wash thoroughly with soap or hand cleaner as soon as possible.**
- **Keep coolant out of reach of children and pets.**

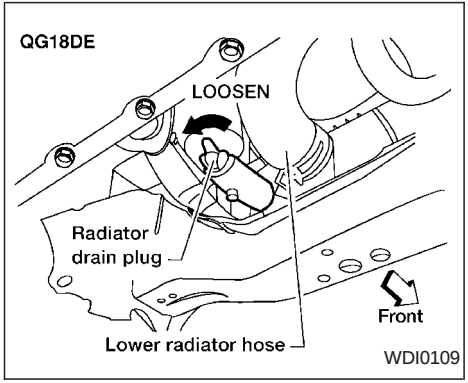

Engine coolant must be disposed of properly. Check your local regulations.

1. Open the radiator drain plug.

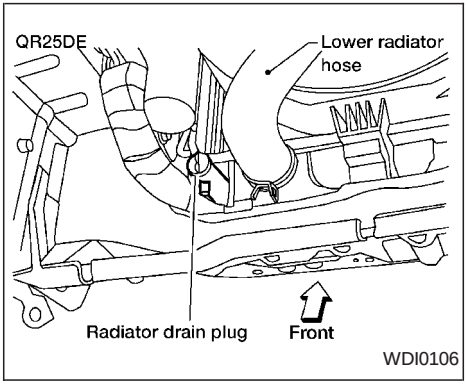

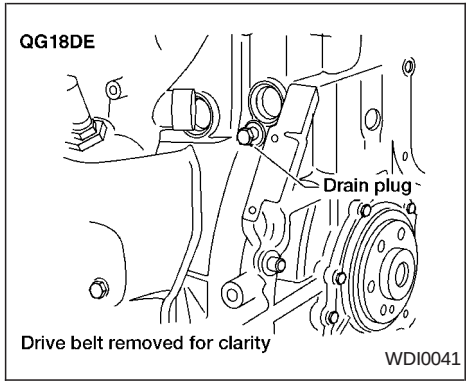

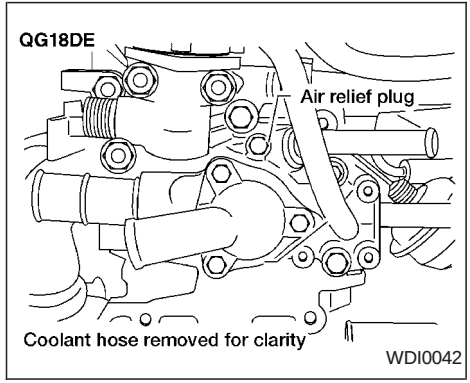

2. Open the drain plug on the engine block.
3. Open the radiator cap to drain the coolant.
   - Waste coolant must be disposed of properly.
   - Check your local regulations.
4. Flush the cooling system by running fresh water through the radiator.
5. Close the drain plugs on the radiator and the engine block securely.
6. See the ‘‘Technical and consumer information’’ section for cooling system capacity. Fill the radiator slowly with the proper mixture of coolant and water. Fill the reservoir tank up to the MAX level.
7. For QG18DE engine only, open and close the air release plug(s) to release air. Then fill the radiator again and install the radiator cap.
8. Start the engine, and warm it up until it reaches normal operating temperature. Then race the engine two or three times under no load. Watch the engine coolant

temperature gauge for signs of overheating.

9. Stop the engine. After it completely cools down, refill the radiator up to the filler opening. Fill the reservoir tank up to the MAX level.
10. For QG18DE engine only, open and close the air release plug(s) to release air. Then fill the radiator again and install the radiator cap.
11. Check the drain plugs on the radiator and the engine block for any sign of leakage. For QG18DE only, also check the air release plug for any sign of leakage.

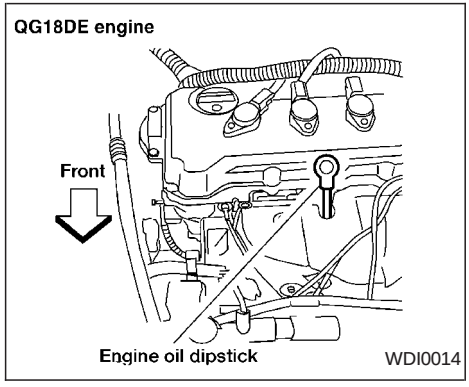

CHECKING ENGINE OIL LEVEL

1. Park the vehicle on a level surface and apply the parking brake.
2. Start the engine and let it idle until it reaches operating temperature.

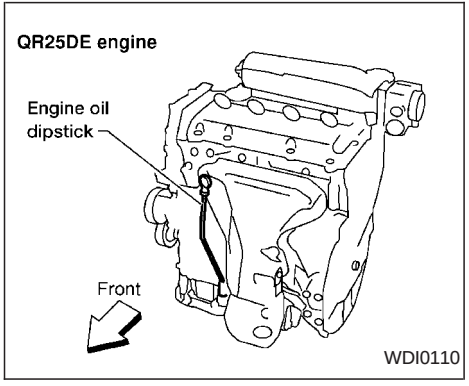

3. Turn off the engine. **Wait a few minutes for the oil to drain back into the oil pan.**
4. Remove the dipstick and wipe it clean. Reinsert it all the way.
5. Remove the dipstick again and check the oil level. It should be between the H (High) and L (Low) marks. If the oil level is below the L (Low) mark, remove the oil filler cap and pour recommended oil through the opening. **Do not overfill.**

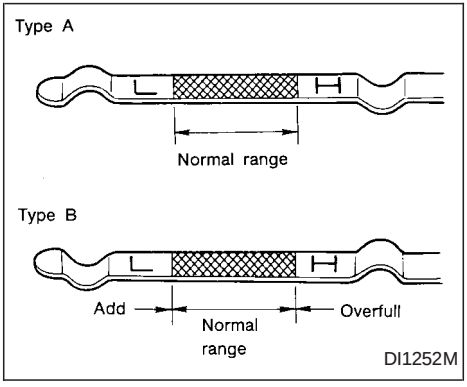

6. Recheck oil level with the dipstick.

It is normal to add some oil between oil maintenance intervals or during the break-in period, depending on the severity of operating conditions.

⚠ CAUTION

Oil level should be checked regularly. Operating the engine with an insufficient amount of oil can damage the engine, and such damage is not covered by warranty.

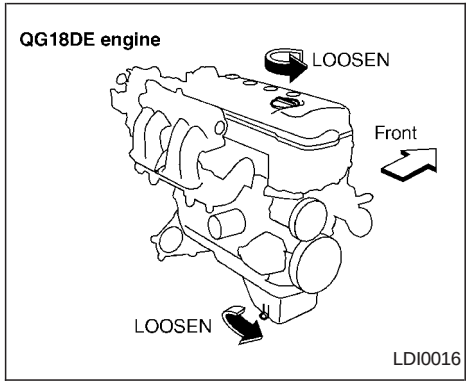

CHANGING ENGINE OIL

1. Park the vehicle on a level surface and apply the parking brake.
2. Run the engine until it reaches operating temperature, and then turn it off.
3. Remove the oil filler cap.
4. Place a large drain pan under the drain plug.
5. Remove the drain plug with a wrench and completely drain the oil.

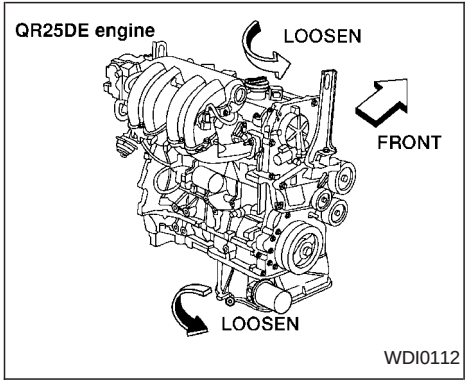

If the oil filter is to be changed, remove and replace it at this time. See ‘‘Changing engine oil filter’’ later in this section.

⚠ CAUTION

Be careful not to burn yourself. The engine oil may be hot.

- **Waste oil must be disposed of properly.**
- **Check your local regulations.**

6. Clean and reinstall the drain plug and a new washer. Securely tighten the drain plug with a wrench.

   Drain plug tightening torque:

   22 to 29 ft-lb (29 to 39 N·m)

   Do not overtighten.

7. Refill engine with recommended oil through the oil filler opening then install the oil filler cap securely.

   See the ‘‘Technical and consumer information’’ section for drain and refill capacity.

   The drain and refill capacity depends on the oil temperature and drain time. Use these specifications for reference only.

   Always use the dipstick to determine when the proper amount of oil is in the engine.

8. Start the engine. Check for leakage around the drain plug and oil filter. Correct as required.

9. Turn the engine off and wait several minutes. Check the oil level with the dipstick. Add engine oil if necessary.

⚠ WARNING

- **Prolonged and repeated contact with used engine oil may cause skin cancer.**
- **Try to avoid direct skin contact with used oil. If skin contact is made, wash thoroughly with soap or hand cleaner as soon as possible.**
- **Keep used engine oil out of reach of children.**

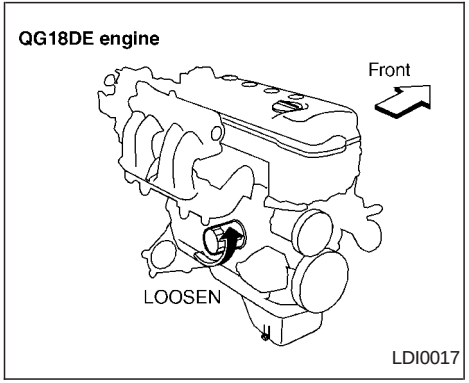

CHANGING ENGINE OIL FILTER

1. Park the vehicle on a level surface and apply the parking brake.
2. Turn the engine off.
3. Place a large drain pan under the oil filter.
4. Loosen the oil filter with an oil filter wrench. Then remove the oil filter by turning it by hand.

⚠ CAUTION

Be careful not to burn yourself. The engine oil may be hot.

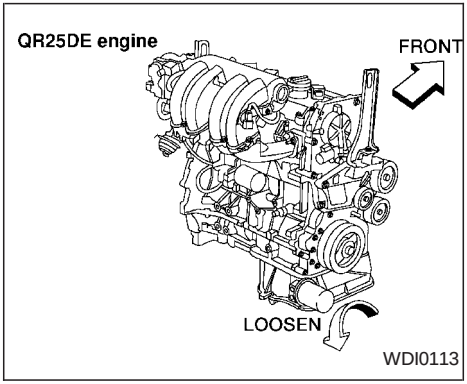

5. Wipe the engine oil filter mounting surface with a clean rag.

   Be sure to remove any old gasket material remaining on the mounting surface of the engine.

6. Coat the gasket on the new filter with clean engine oil.
7. Screw on the oil filter until a slight resistance is felt, then tighten an additional 2/3 turn.
8. Start the engine and check for leakage around the oil filter. Correct as required.
9. Turn the engine off and wait several minutes. Check the oil level. Add engine oil if necessary.

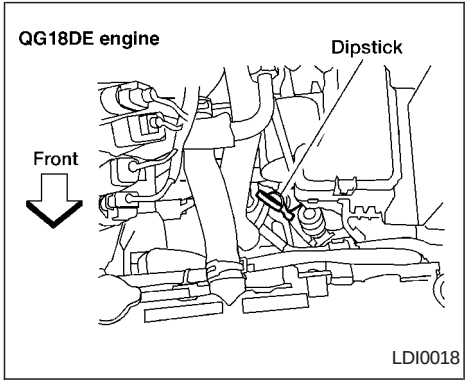

⚠ WARNING

- **When the engine is running, keep hands, jewelry and clothing away from any moving parts such as the cooling fan and drive belts.**
- **Automatic transmission fluid is poisonous and should be stored carefully in marked containers out of the reach of children.**

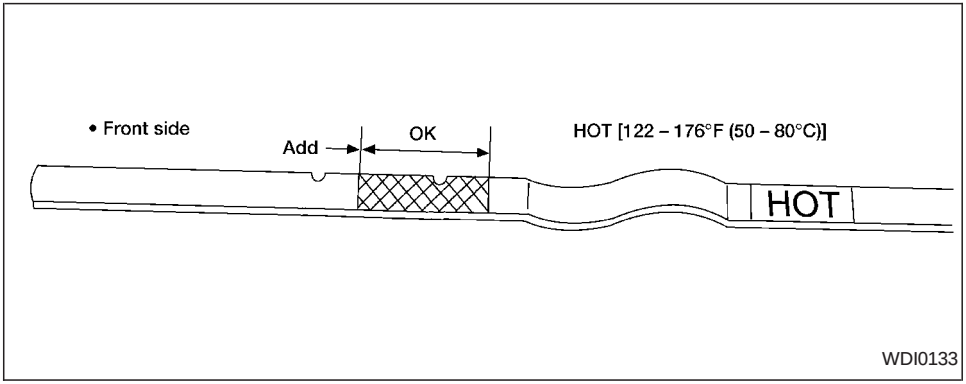

TEMPERATURE CONDITIONS FOR CHECKING

- The fluid level should be checked using the HOT range on the dipstick after the following conditions have been met:

— The engine should be warmed up to operating temperature.

— The vehicle should be driven at least 5 minutes.

— The automatic transmission fluid should be warmed to between 122 and 176°F (50 and 80°C).

- The fluid can be checked at fluid temperatures of 86 to 122°F (30 to 50°C) using the COLD range on the dipstick after the engine is warmed up and before driving. However, the fluid should be re-checked using the HOT range.

1. Park the vehicle on a level surface and set the parking brake.
2. Start the engine and then move the shift selector lever through each gear range. Move the shift selector lever to P (Park) after you have moved it through all ranges.
3. Check the fluid level with the engine idling.
4. Remove the dipstick and wipe it clean with lint-free paper.
5. Reinsert the dipstick into the dipstick tube as far as it will go.
6. Remove the dipstick and note the reading. If the level is at the low side of either range, add fluid through the dipstick tube.

⚠ CAUTION

DO NOT OVERFILL. Use ONLY Nissan Matic 'D' (Continental U.S. and Alaska) or Canada NISSAN Automatic Transmission Fluid. Dexron™ III/Mercon™ or equivalent may also be used. Outside the continental United States and Alaska contact an authorized NISSAN dealership for more information regarding suitable fluids, including recommended brand(s) of Dexron™ III/Mercon™ Automatic Transmission Fluid.

NOTE:

If the vehicle has been driven for a long time at high speeds, or in city traffic in hot weather, or if it is being used to pull a trailer, the accurate fluid level cannot be read. You should wait until the fluid has cooled down (about 30 minutes) before checking fluid level.

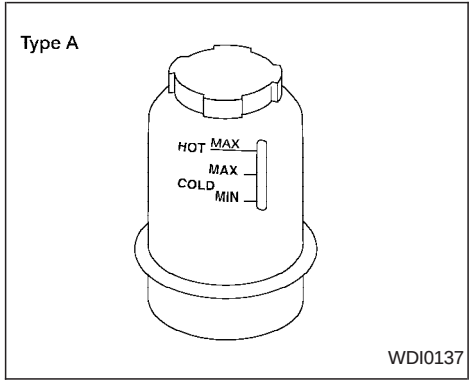

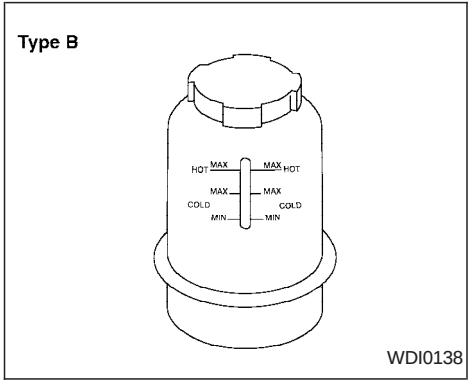

Check the fluid level in the reservoir.

The fluid level should be checked using the HOT range on the side of the fluid reservoir at fluid temperatures of 122 to 176°F (50 to 80°C) or using the COLD range on the side of the fluid reservoir at fluid temperatures of 32 to 86°F (0 to 30°C).

⚠ CAUTION

- **DO NOT OVERFILL.**
- **Recommended fluid is Genuine NISSAN PSFII or equivalent.**

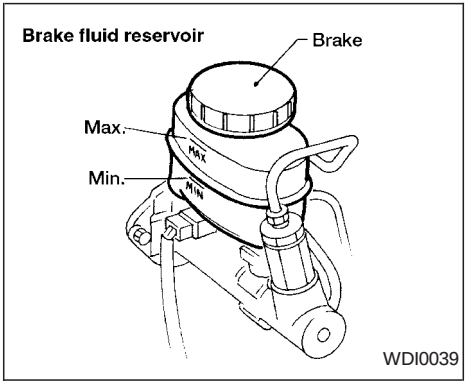

BRAKE FLUID

Check the brake fluid level in the reservoir. If the fluid is below the MIN line or the brake warning light comes on, add Genuine Nissan Brake fluid or equivalent **DOT 3** fluid up to the MAX line. If fluid must be added frequently, the system should be thoroughly checked by an authorized NISSAN dealer.

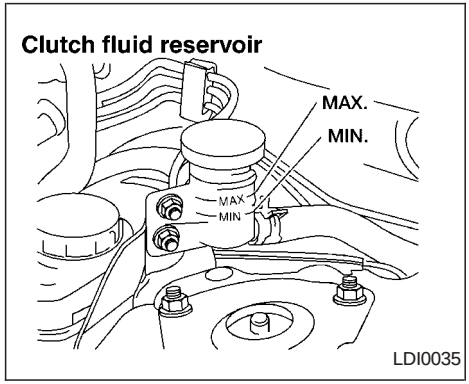

CLUTCH FLUID

Check the clutch fluid level in the reservoir (manual transmission only). If the fluid level is below the MIN line, add Genuine Nissan Brake fluid or equivalent **DOT 3** fluid up to the MAX line. If fluid must be added frequently, the system should be thoroughly checked by an authorized NISSAN dealer.

For further brake and clutch fluid specification information, refer to “Capacities and recommended fuel/lubricants” in the “Technical and consumer information” section of this manual.

⚠ WARNING

Use only new fluid from a sealed container. Old, inferior or contaminated fluid may damage the brake and clutch systems. The use of improper fluids can damage the brake system and affect the vehicle’s stopping ability.

⚠ CAUTION

Do not spill the fluid on painted surfaces. This will damage the paint. If fluid is spilled, immediately wash the surface with water.

WINDOW WASHER FLUID

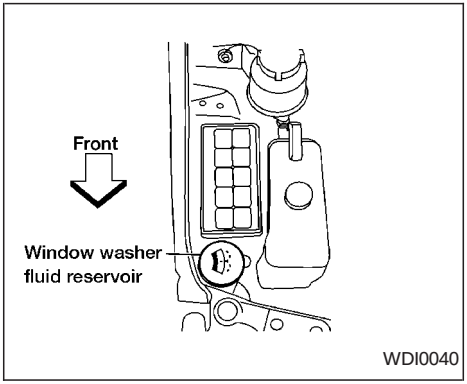

To fill the window washer fluid reservoir, lift the cap off the reservoir tank and pour the window washer fluid into the tank opening.

Add a washer solvent to the water for better cleaning. In the winter season, add a windshield washer antifreeze. Follow the manufacturer's instructions for the mixture ratio.

USA Only

Fill the window washer fluid reservoir periodically. Perform the refilling operation more often under driving conditions that require an increased amount of window washer fluid.

Canada Only

Add fluid when the low washer fluid warning light comes on. Add a washer solvent to the water for better cleaning. In the winter season, add a windshield washer antifreeze. Follow the manufacturer's instructions for the mixture ratio.

⚠ CAUTION

Do not substitute engine anti-freeze coolant for windshield washer solution. This may result in damage to the paint.

BATTERY

- Keep the battery surface clean and dry. Any corrosion should be washed off with a solution of baking soda and water.
- Make certain the terminal connections are clean and securely tightened.
- If the vehicle is not to be used for 30 days or longer, disconnect the negative (−) battery terminal cable to prevent discharge.

⚠ WARNING

- **Do not expose the battery to flames or electrical sparks. Hydrogen gas generated by the battery is explosive. Do not allow battery fluid to contact your skin, eyes, fabrics, or painted surfaces. After touching a battery or battery cap, do not touch or rub your eyes. Thoroughly wash your hands. If the acid contacts your eyes, skin or clothing, immediately flush with water for at least 15 minutes and seek medical attention.**
- **Do not operate the vehicle if the fluid in the battery is low. Low battery fluid can cause a higher load on the battery which can generate heat, reduce battery life, and in some cases lead to an explosion.**

- **When working on or near the battery, always wear suitable eye protection and remove all jewelry.**
- **Battery posts, terminals and related accessories contain lead compounds. Wash hands after handling.**
- **Keep the battery out of the reach of children.**

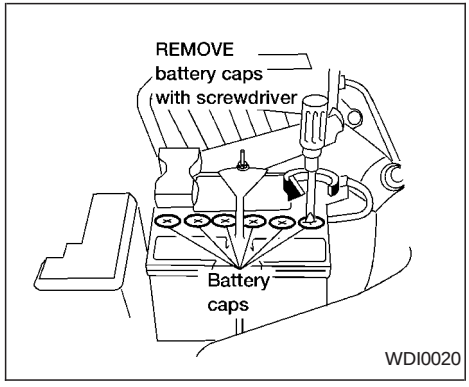

1. Remove the battery caps with a screwdriver as shown.

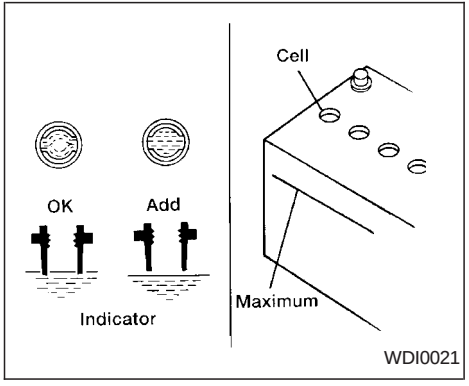

2. Check the fluid level in each cell.

   If it is necessary to add fluid, add only distilled water to bring the level up to the OK level indicator in each filler opening. **Do not overfill.**

   Vehicles operated in high temperatures or under severe conditions require checks of the battery fluid level.

JUMP STARTING

If jump starting is necessary, see the ‘‘In case of emergency’’ section of this owner’s manual. If the engine does not start by jump starting, the battery may have to be replaced. Contact an authorized NISSAN dealer.

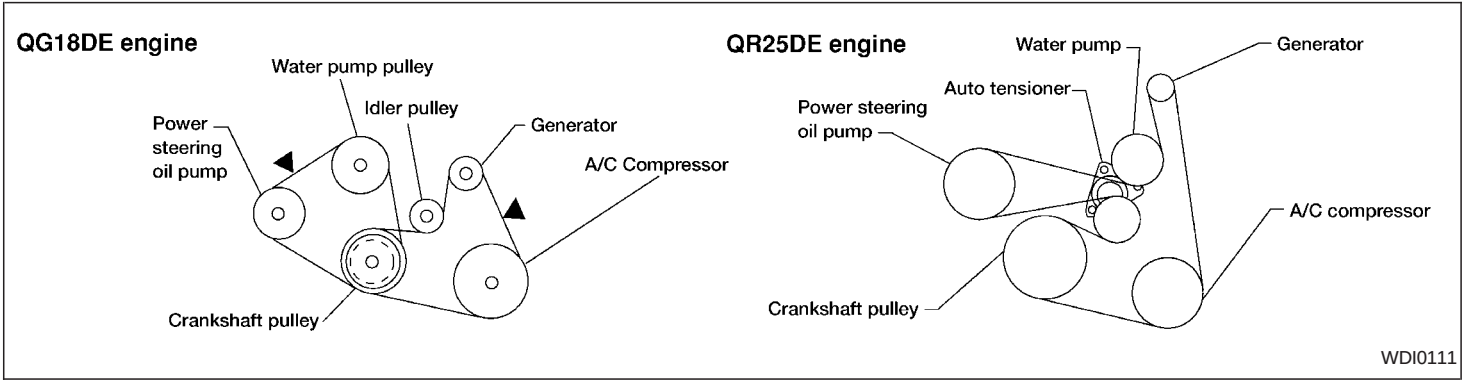

⚠ WARNING

Be sure the ignition key is in the OFF or LOCK position. The engine could rotate unexpectedly.

1. Visually inspect each belt for signs of unusual wear, cuts, fraying or looseness. If the belt is in poor condition or loose, have it replaced or adjusted by an authorized NISSAN dealer.
2. Have the belts checked regularly for condition and tension in accordance with the maintenance schedule found in the "NISSAN Service and Maintenance Guide".

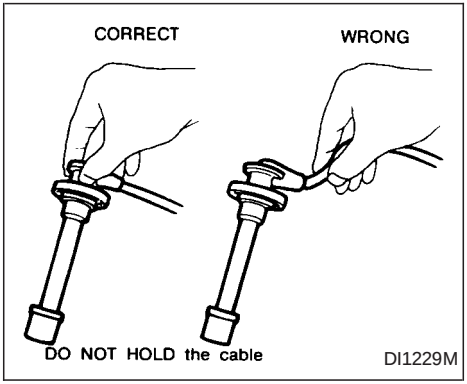

⚠ WARNING

Be sure the engine and ignition switch are off and that the parking brake is engaged securely.

⚠ CAUTION

Be sure to use the correct socket to remove the spark plugs. An incorrect socket can damage the spark plugs.

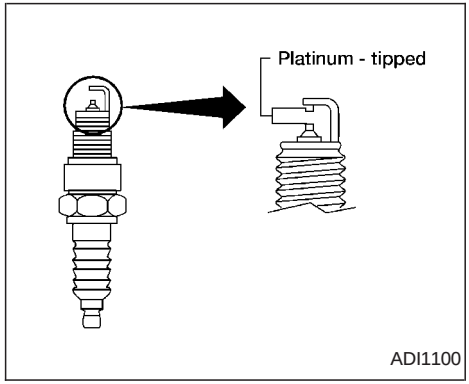

REPLACING SPARK PLUGS

Platinum-tipped spark plugs

It is not necessary to replace platinum-tipped spark plugs as frequently as conventional type spark plugs because they last much longer. Follow the maintenance schedule, but do not reuse the spark plugs by cleaning or regapping.

- **Always replace spark plugs with recommended or equivalent ones.**

1. On the 1.8L engine, disconnect the ignition coil connectors. Remove the ignition coil bolts.
2. Disconnect the spark plug cables from the spark plugs.

   When disconnecting, always hold the boots, not the cables. Mark all cables to identify their original locations.
3. Remove the spark plugs with a spark plug socket.

   The plug socket has a rubber seal that holds the spark plug so it does not fall when it is pulled out. Make sure each spark plug is snugly fitted into the spark plug socket.
4. Fit the new plugs, one at a time, into the spark plug socket and install them. **Use only the specified spark plugs.** Turn each plug several full turns by hand, then tighten with the spark plug socket to the correct torque. Do not overtighten.

   Spark plug tightening torque:

   14 to 22 ft-lb (20 to 29 N·m)

5. Holding the boot, reconnect each high tension cable to its proper spark plug by pushing it on until you feel a snap.
6. On the 1.8L engine, install the ignition coil bolt.

   Ignition coil bolt tightening torque:

   33 to 44 in-lb (3.8 - 5.0 N·m)

   Connect the ignition coil connector.

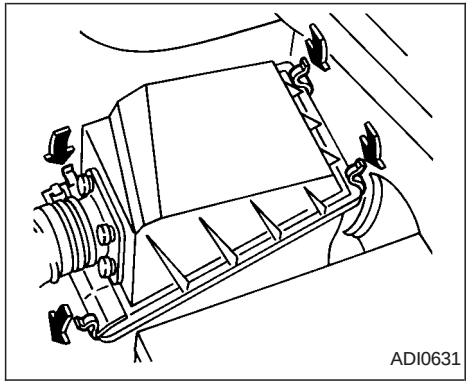

The air cleaner filter should not be cleaned and reused. Replace it according to the maintenance intervals shown in the ''NISSAN Service and Maintenance Guide''. When replacing the filter, wipe the inside of the air cleaner housing and the cover with a damp cloth.

⚠ WARNING

- **Operating the engine with the air cleaner removed can cause you or others to be burned. The air cleaner not only cleans the air, it stops the flame if the engine backfires. If it isn't there, and the engine backfires, you could be burned. Do not drive with the air cleaner removed and be careful when working on the engine with the air cleaner removed.**
- **Never pour fuel into the throttle body or attempt to start the engine with the air cleaner removed. Doing so could result in serious injury.**

CABIN AIR FILTER (if so equipped)

The cabin air filter restricts the entry of airborne dust and pollen particles and reduces some objectionable outside odors. The filter is located behind the glove box. Refer to the ''NISSAN Service and Maintenance Guide'' for change intervals.

To replace the filter, perform the following procedure:

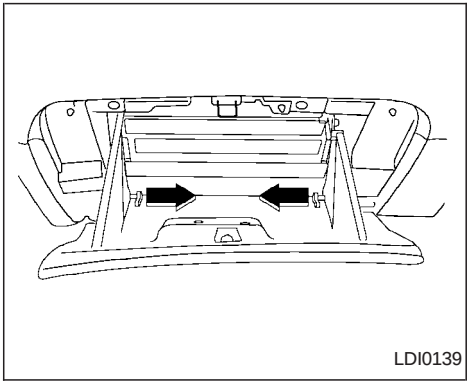

1. Remove the glove box door by removing the 2 lower hinge pins.

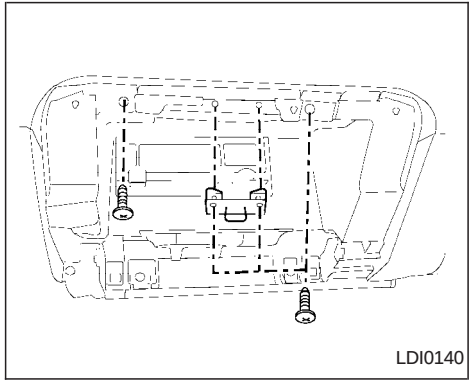

2. Remove the 2 screws securing the glove box frame.
3. Remove the 2 screws securing the glove box door latch. Remove the latch by pulling it down.
4. Remove the glove box frame by pulling it away from the instrument panel to disengage the retaining clips.

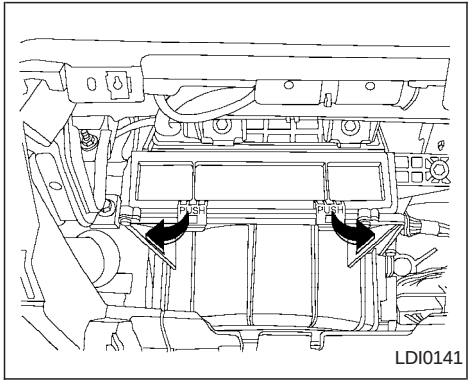

5. Remove the filter cover from the intake unit by disengaging the 2 hook tabs at the bottom of the cover.

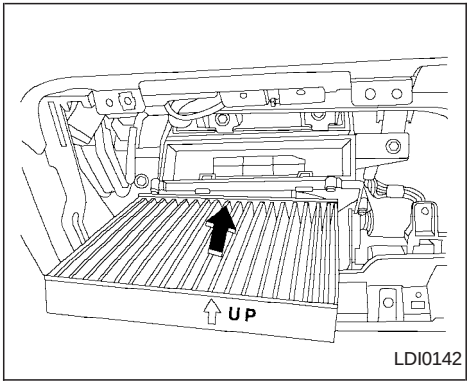

NOTE:

The filter is marked ‘‘UP’’ with an arrow. The end of the filter with the arrow should face the rear of the vehicle.

6. Slide the filter into the housing.

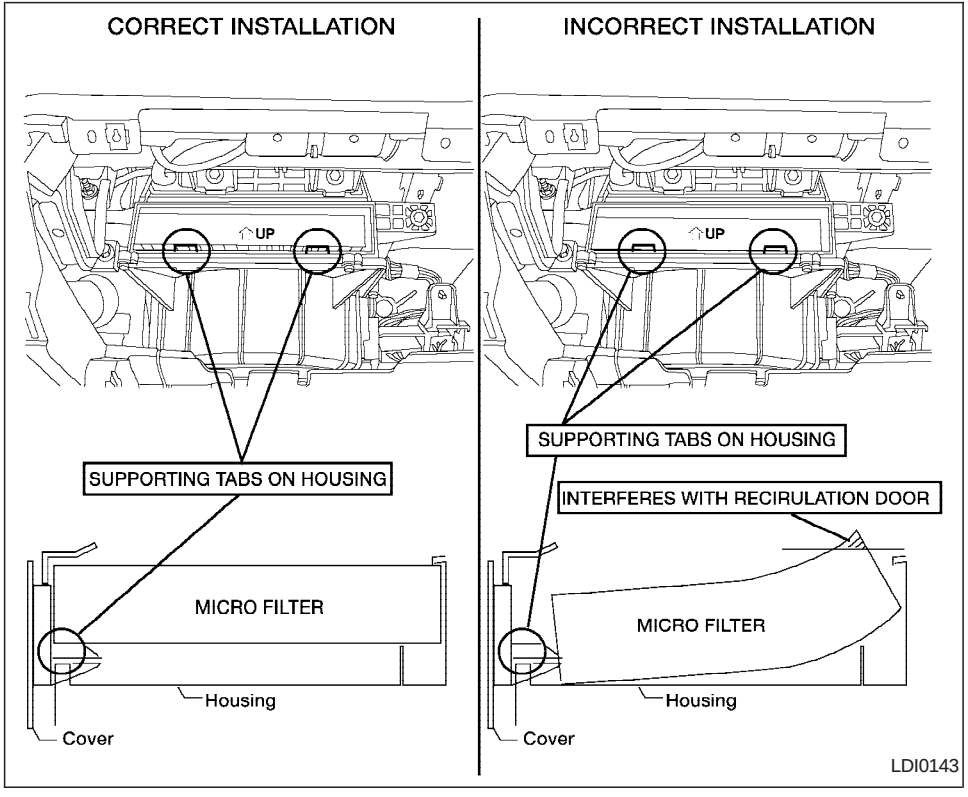

NOTE:

Make sure the filter sits on top of the 2 supporting tabs on the housing.

7. Replace the cover by inserting the upper tabs inside the housing slot and pushing the hook tabs until they snap onto the housing lip.
8. Install the glove box frame and latch.
9. Install the glove box door.
10. Fill out the date information on the small replacement label and attach it to the glove box lid.

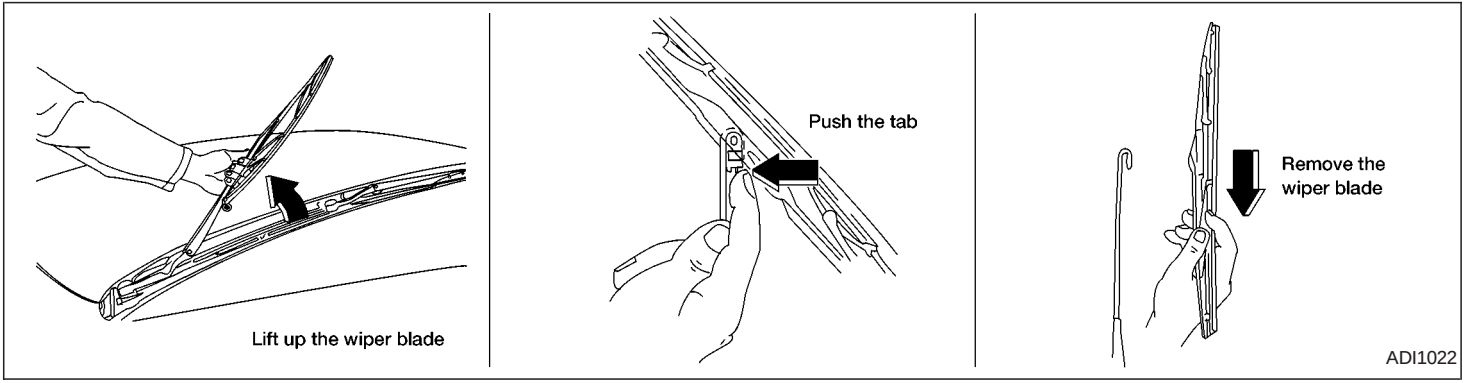

CLEANING

If your windshield is not clear after using the windshield washer or if the wiper blade chatters when running, wax or other material may be on the blade or windshield.

Clean the outside of the windshield with a washer solution or a mild detergent. Your windshield is clean if beads do not form when rinsing with clear water.

Clean the blade by wiping it with a cloth soaked in a washer solution or a mild detergent. Then rinse the blade with clear water. If your windshield is still not clear after cleaning the blades and using the wiper, replace the blades.

⚠ CAUTION

Worn windshield wiper blades can damage the windshield and impair driver vision.

REPLACING

Replace the wiper blades if they are worn

1. Lift the wiper arm away from the windshield.
2. Push the tab, then move the wiper blade down the wiper arm to remove.
3. Remove the wiper blade.
4. Insert the new wiper blade onto the wiper arm until it clicks.

⚠ CAUTION

- **After wiper blade replacement, return the wiper arm to its original position; otherwise it may be damaged when the hood is opened.**

- **Make sure the wiper blades contact the glass; otherwise the arms may be damaged from wind pressure.**

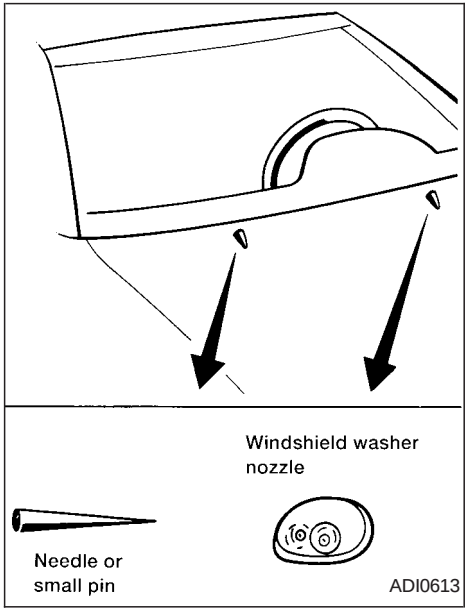

When you wax the surface of the hood, be careful not to let wax get into the washer nozzle. This may cause clogging or improper windshield washer operation. If wax gets into the nozzle, remove it with a needle or small pin.

PARKING BRAKE AND BRAKE PEDAL

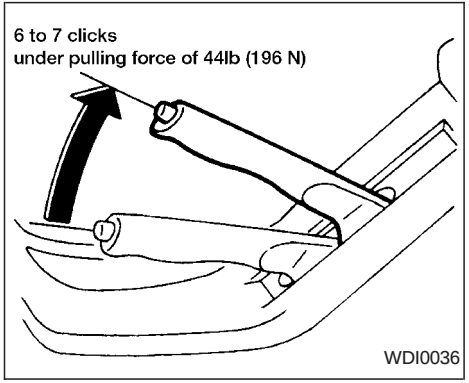

CHECKING PARK BRAKE

From the released position, pull the parking brake lever up slowly and firmly. If the number of clicks is out of the range listed above, see an authorized NISSAN dealer.

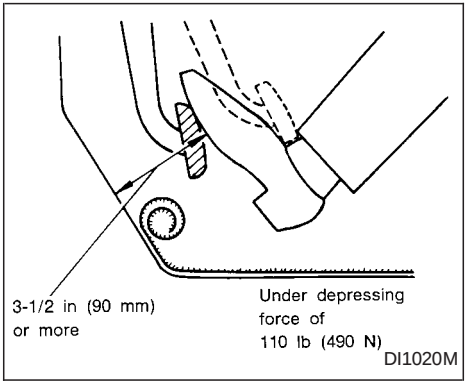

CHECKING BRAKE PEDAL

With the engine running, check the distance between the upper surface of the pedal and the metal floor. If it is out of the range shown above, see an authorized NISSAN dealer.

Self-adjusting brakes

Your vehicle is equipped with self-adjusting brakes.

The front (and rear, if equipped) disc-type brakes self-adjust every time the brake pedal is applied. The rear drum-type brakes also self-adjust every time the brake pedal is applied.

If the brake pedal goes down farther than normal, it may be due to a lack of adjustment of the rear drum brakes. To adjust, apply the parking brake several times.

⚠ WARNING

See an authorized NISSAN dealer for a brake system check if the brake pedal height does not return to normal.

Brake pad wear indicators

The disc brake pads on your vehicle have an audible wear indicator. When a brake pad requires replacement, it makes a high pitched scraping or screeching sound when the vehicle is in motion whether or not the brake pedal is depressed. Have the brakes checked as soon as possible if the wear indicator sound is heard.

Under some driving or climate conditions, occasional brake squeak, squeal or other noise may be heard. Occasional brake noise during light to moderate stops is normal and does not affect the function or performance of the brake system.

The rear drum brakes (if so equipped) do not have audible wear indicators. Should you ever hear an unusually loud noise from the rear drum brakes, have them inspected as soon as possible by an authorized NISSAN dealer.

Proper brake inspection intervals should be followed. For more information regarding brake inspections, see the appropriate maintenance schedule information in the ‘‘NISSAN Service and Maintenance Guide’’.

BRAKE BOOSTER

Check the brake booster function as follows:

1. With the engine off, press and release the brake pedal several times. When brake pedal movement (distance of travel) remains the same from one pedal application to the next, continue on to the next step.
2. While depressing the brake pedal, start the engine. The pedal height should drop a little.
3. With the brake pedal depressed, stop the engine. Keeping the pedal depressed for about 30 seconds, the pedal height should not change.

4. Run the engine for one minute without depressing the brake pedal, then turn it off. Depress the brake pedal several times. The pedal travel distance will decrease gradually with each depression as the vacuum is released from the booster.

If the brakes do not operate properly, see an authorized NISSAN dealer.

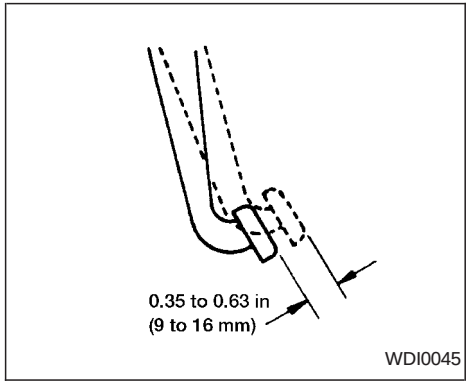

CHECKING CLUTCH PEDAL

Press the pedal by hand and be sure the free travel is within the limits shown above. If free travel is out of the range shown above, see an authorized NISSAN dealer.

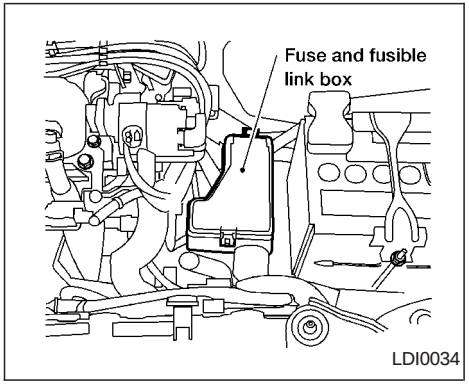

⚠ CAUTION

Never use a fuse of higher amperage rating than specified on the fuse box cover. This could damage the electrical system or cause a fire.

ENGINE COMPARTMENT

If any electrical equipment does not come on, check for an open fuse.

1. Be sure the ignition switch and the headlight switch are OFF.
2. Open the engine hood.

3. Remove the fuse box cover.
4. Remove the fuse with the fuse puller. The fuse puller is located in the center of the fuse block in the passenger compartment.
5. If the fuse is open, replace it with a new fuse.
6. If a new fuse also opens, have the electrical system checked and repaired by an authorized NISSAN dealer.

Fusible links

If there is electrical equipment that does not operate and fuses are in good condition, check the fusible links. If any of these fusible links are melted, replace with only genuine NISSAN parts.

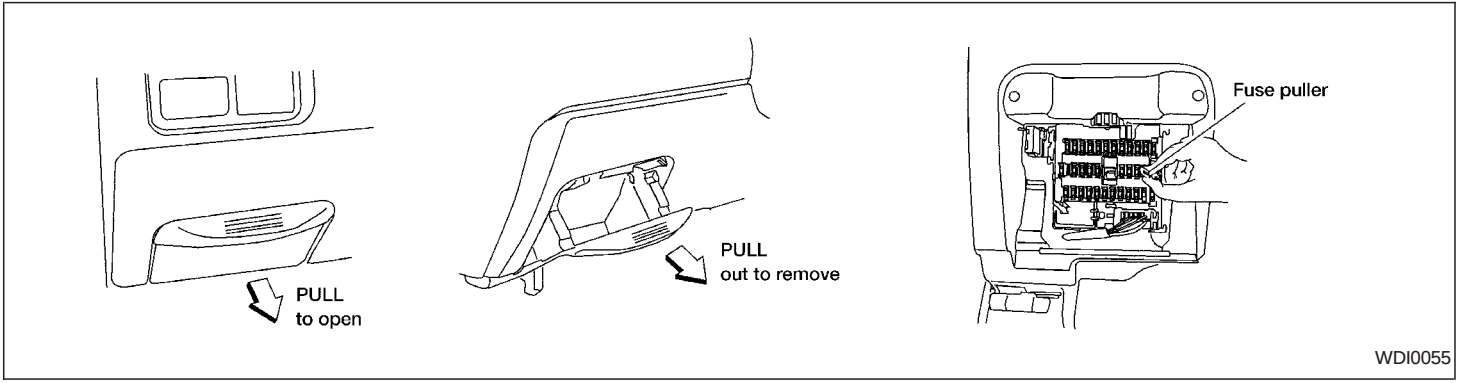
PULL
to open
PULL
out to remove
Fuse puller
WDI0055

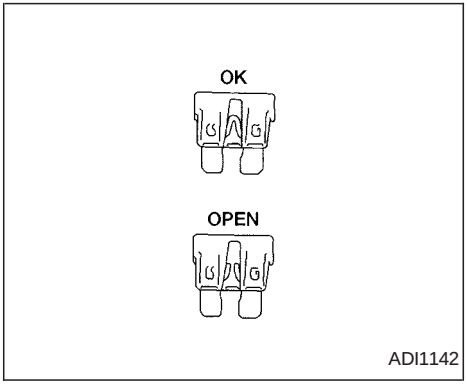

⚠ CAUTION

Never use a fuse of higher amperage rating than specified. This could damage the electrical system or cause a fire.

PASSENGER COMPARTMENT

If any electrical equipment does not operate, check for an open fuse.

1. Be sure the ignition switch and the headlight switch are OFF.
2. Remove the coin box.
3. Remove the fuse with the fuse puller. The fuse puller is located in the center of the fuse block.
4. If the fuse is open, replace it with a new fuse.
5. If a new fuse also opens, have the electrical system checked and repaired by an authorized NISSAN dealer.

KEYFOB BATTERY REPLACEMENT

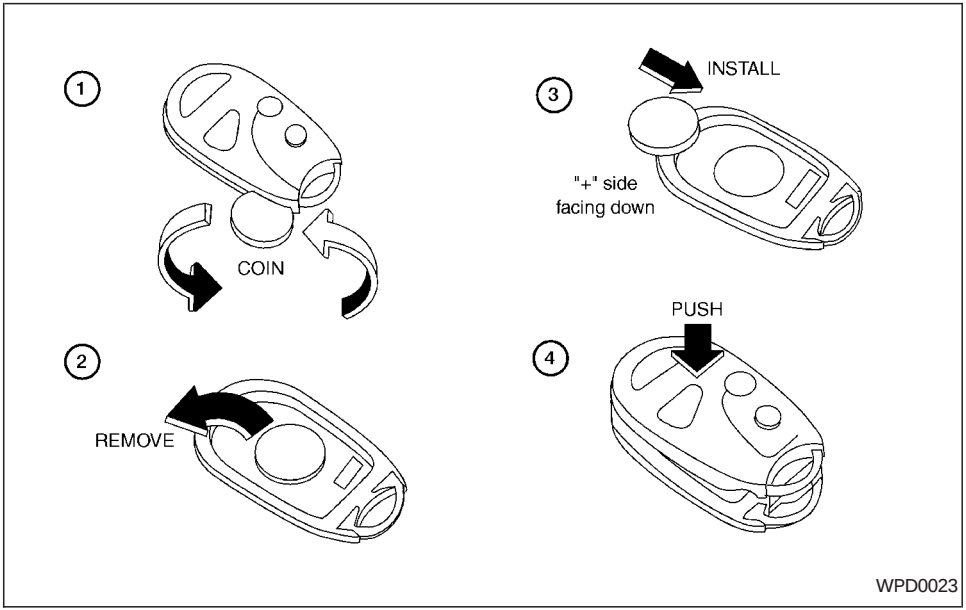

Replace the battery in the keyfob as follows:

1. Open the lid using a coin.
2. Remove the battery.
3. Install a new battery.

Recommended battery: Sanyo CR2025 or equivalent.

4. Close the lid securely.
5. Press the LOCK button, then the UNLOCK button two or three times to check the keyfob operation.

If the battery is removed for any reason other than replacement, perform step five.

- **An improperly disposed battery can hurt the environment. Always confirm local regulations for battery disposal.**
- **The keyfob is water-resistant; however, if it does get wet, immediately wipe completely dry.**
- **The operational range of the keyfob extends to approximately 49 ft (15 m) from the vehicle. This range may vary with conditions.**

FCC Notice:

Changes or modifications not expressly approved by the manufacturer for compliance could void the user's authority to operate the equipment.

This device complies with Part 15 of the FCC Rules and RSS-210 of Industry Canada.

Operation is subject to the following two conditions: (1) This device may not cause harmful interference, and (2) this device must accept any interference received, including interference that may cause undesired operation of the device.

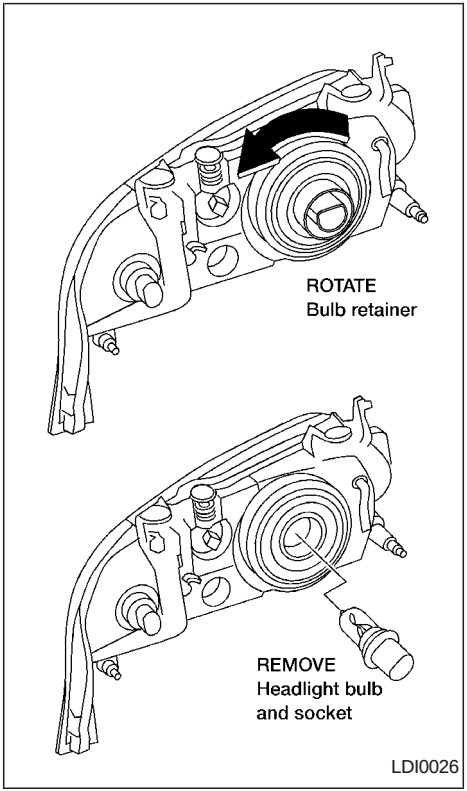

HEADLIGHTS

The headlight is a semi-sealed beam type which uses a replaceable headlight (halogen) bulb. A bulb can be replaced from inside the engine compartment without removing the headlight assembly.

⚠ CAUTION

- **High pressure halogen gas is sealed inside the halogen bulb. The bulb may break if the glass envelope is scratched or the bulb is dropped.**
- **When handling the bulb, do not touch the glass envelope.**
- **DO NOT TOUCH THE BULB**
- **Use the same number and wattage as originally installed:**

  Wattage 65/55
  Bulb no. 9007 (HB5)
- **Do not leave the bulb out of the headlight reflector for a long period of time as dust, moisture, and smoke may enter the headlight body and affect the performance of the headlight.**

Removing the headlight bulb

1. Open the hood.
2. Disconnect the negative (-) battery cable.
3. Disconnect the electrical connector from the rear end of the bulb.
4. Rotate the bulb retainer counterclockwise and remove.
5. Pull out the headlight bulb and socket as an assembly. Do not shake or rotate the bulb when removing it. Do not touch the glass envelope.

Replacing the headlight bulb

1. Insert the bulb and socket assembly into the headlight.

   DO NOT TOUCH THE BULB.
2. Install and tighten the bulb retainer.
3. Push the electrical connector into the bulb plastic base until it snaps and stops.
4. Connect the negative (-) battery cable.
5. Close the hood.

Aiming is not necessary after replacing the bulb.

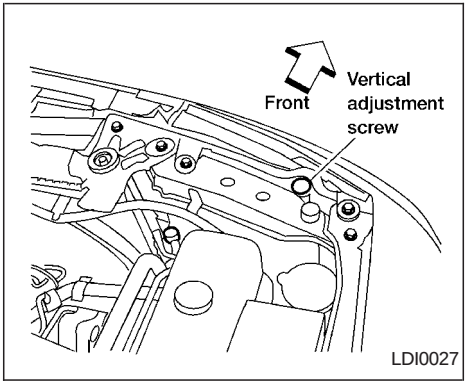

Adjusting the headlight aim

Before performing aiming adjustment, make sure of the following:

a. Use an aiming wall screen.

b. Keep all of the tires inflated to the correct pressure.

c. Place the vehicle and screen on level ground.

d. See that the vehicle is unloaded (except for full levels of coolant, engine oil and fuel, and that the spare tire, jack, and tools are stored). Have the driver or an equivalent weight placed in the driver's seat.

1. Open the hood. Turn headlight low beam on.
2. Adjust the vertical aim by turning the adjustment screw.

- Cover the opposite light and ensure the fog lights (if so equipped) are turned off.
- Adjust beam pattern until cutoff line is positioned at the same height off ground as bulb center (on H-line).

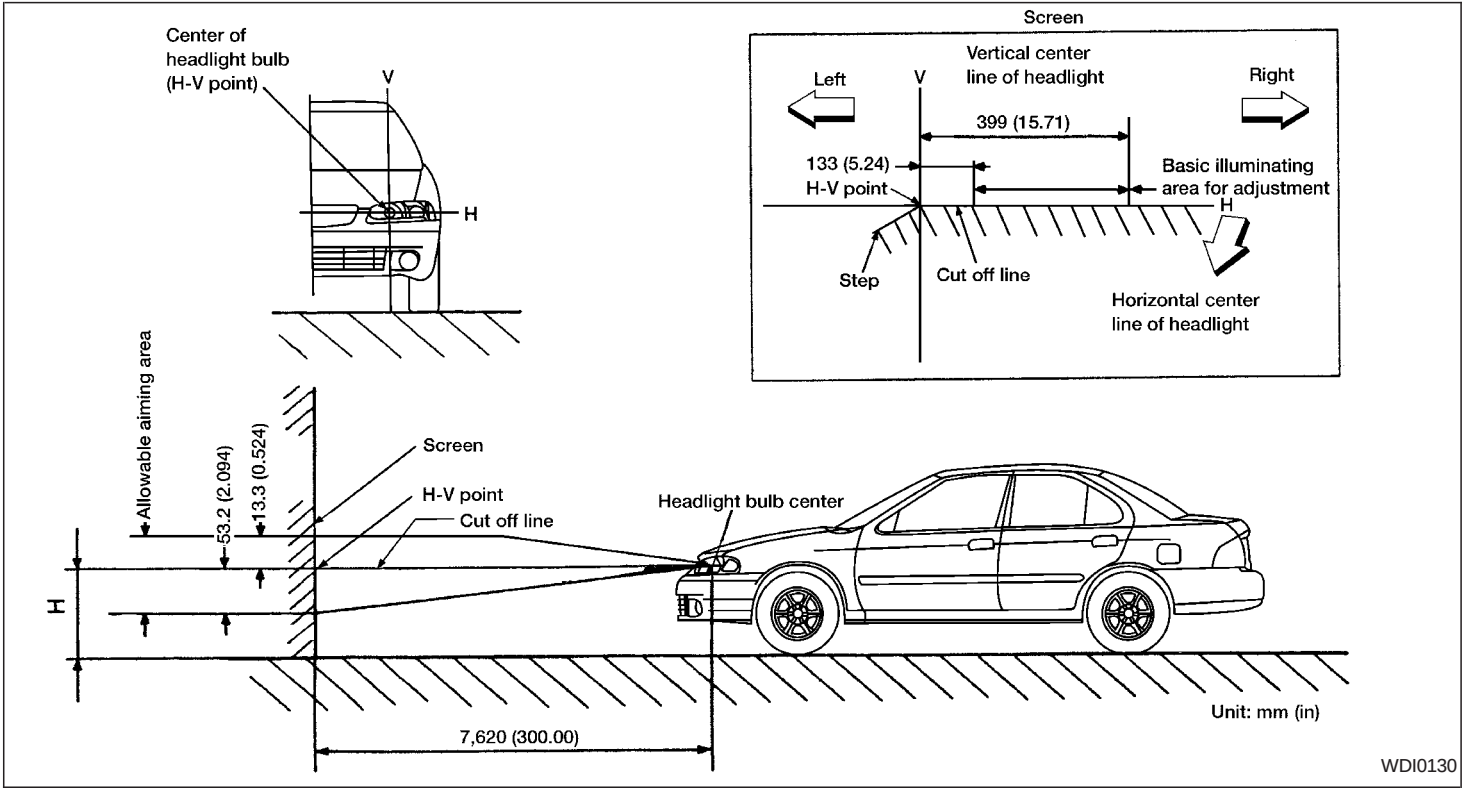
Center of
headlight bulb
(H-V point)
V
H
Screen
Vertical center
line of headlight
Left
V
Right
399 (15.71)
133 (5.24)
H-V point
Basic illuminating
area for adjustment
H
Step
Cut off line
Horizontal center
line of headlight
Allowable aiming area
53.2 (2.094)
13.3 (0.524)
Screen
H-V point
Cut off line
Headlight bulb center
H
Unit: mm (in)
7,620 (300.00)
WDI0130

If the vehicle front body has been repaired and/or the headlight assembly has been replaced, check aiming. Use the aiming chart shown in the illustration.

- Basic illuminating area should be within the range shown. Adjust headlights accordingly.

FOG LIGHTS (if so equipped)

Replacing the fog light bulb

1. Remove screw.
2. Disconnect connector.
3. Push the fog light assembly towards the front of the vehicle and pull out to expose the rear of the assembly.
4. Rotate the bulb cover counterclockwise and remove.
5. Lift the spring retainer.
6. Remove the fog light bulb from housing.
7. Disconnect the electrical connector.

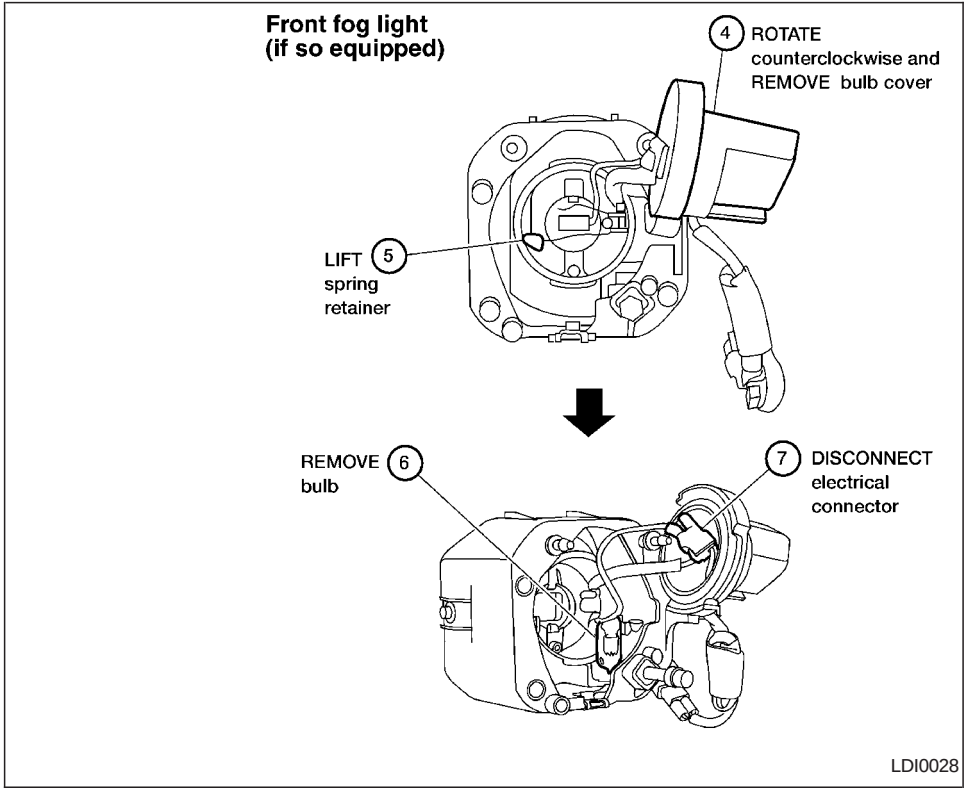

EXTERIOR AND INTERIOR LIGHTS

Item	Wattage (W)	Bulb No.*
Headlights	65/55	9007(HB5)
Parking and turn signal light	8/27	3157AK
Fog light	55	H3
Map light (if so equipped)	8	68
Interior light	8	68
Rear combination light		
Turn	27	1156A
Stop/tail	27/8	1157
High-mounted stoplight		
Inside	18	921
Spoiler (if so equipped)	See an authorized NISSAN dealer for assistance	
License plate light	5	194
Backup light	18	921
Trunk light	3.4	158

*: Always check with the Parts Department at an authorized NISSAN dealer for the latest parts information.

Light location

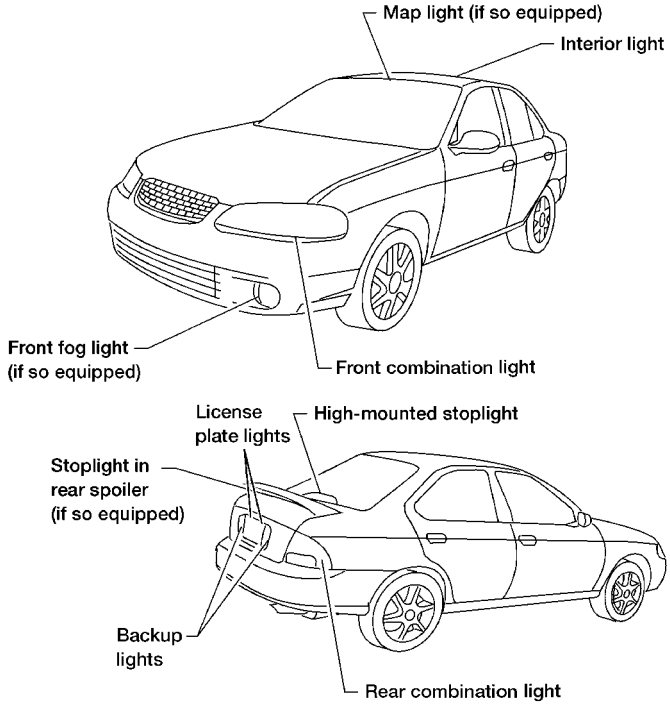

WDI0131

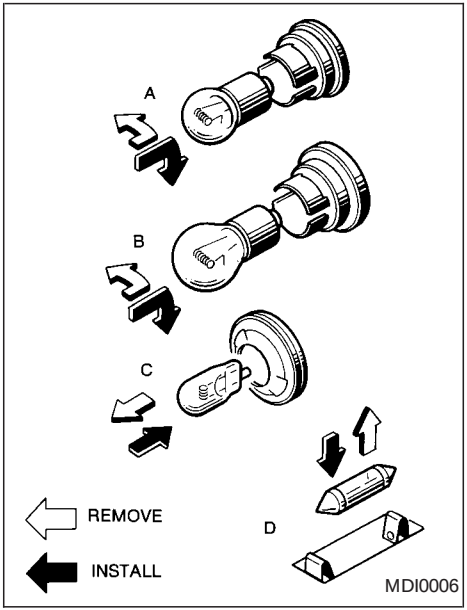

Replacement procedures

All other lights are either type A, B, C or D. When replacing a bulb, first remove the lens and/or cover.

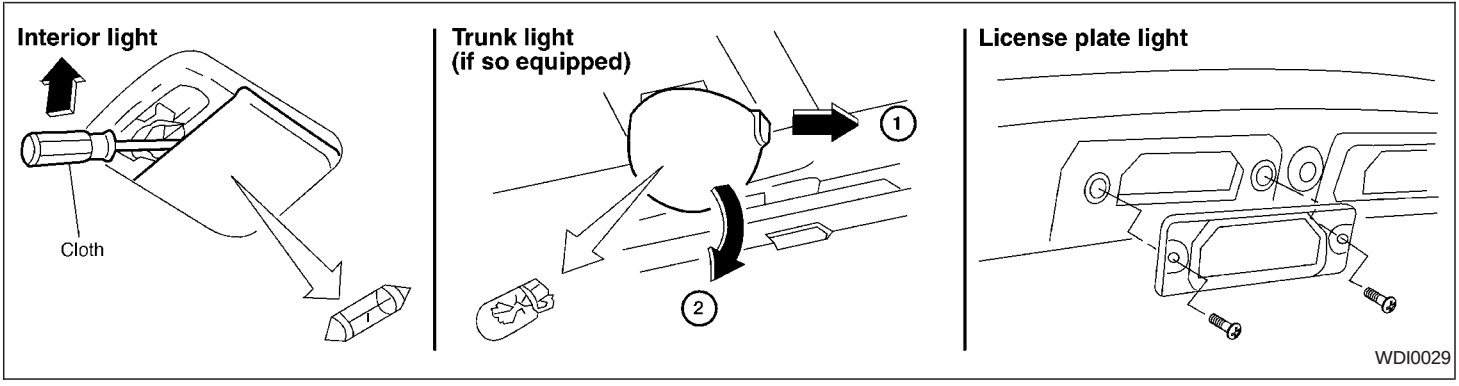
Interior light
Cloth
Trunk light
(if so equipped)
1
2
License plate light
WDI0029

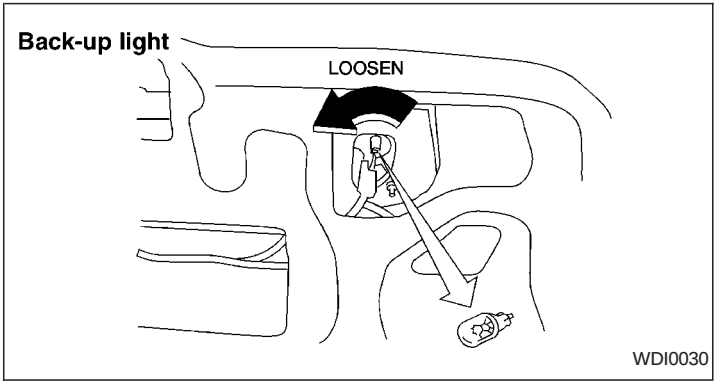

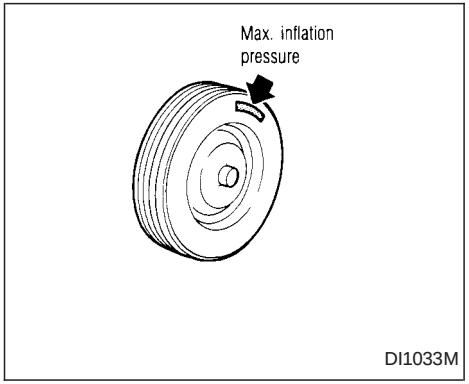

If you have a flat tire, see the ‘‘In case of emergency’’ section of this manual.

TIRE PRESSURE

Maximum inflation pressure

Do not exceed the maximum inflation pressures shown on the side wall of the tire.

Tire inflation pressure

Check the tire pressure (including the spare) at least once a month and always prior to long distance trips. Incorrect tire pressure may adversely affect tire life and vehicle handling. Tire pressure should be

checked when tires are COLD. Tires are considered COLD after the vehicle has been parked for three or more hours, or driven less than 1 mile (1.6 km) at moderate speeds. COLD tire pressures are shown on the tire placard affixed to the driver's side rear door pillar.

WARNING

- **Improperly inflated tires can fail suddenly and cause an accident.**
- **The vehicle weight capacity is indicated on the tire placard. Do not load your vehicle beyond this capacity. Overloading your vehicle may result in reduced tire life, unsafe operating conditions due to premature tire failure, or unfavorable handling characteristics and could also lead to a serious accident. Loading beyond the specified capacity may also result in failure of other vehicle components.**
- **Before taking a long trip, or whenever you heavily load your vehicle, use a tire pressure gauge to ensure that the tire pressures are at the specified level.**
- **Do not drive your vehicle over 85 MPH (140 km/h) unless it is equipped with high speed rated tires. Driving faster than 85 MPH (140 km/h) may result in tire failure, loss of control and possible injury.**
- **For additional information regarding tires, refer to ''Important Tire Safety Information'' in the Warranty Information Booklet (US) or ''Tire Safety Information'' in the Warranty and Roadside Assistance Information booklet (Canada).**

TYPES OF TIRES

WARNING

- **When changing or replacing tires, be sure all four tires are of the same type (i.e., summer, all season or snow) and construction. An authorized NISSAN dealer may be able to help you with information about tire type, size, speed rating and availability. Replacement tires may have a lower speed rating than the factory equipped tires, and may not match the potential maximum vehicle speed. Never exceed the maximum speed rating of the tire.**
- **For additional information regarding tires, refer to ''Important Tire Safety Information'' in the Warranty Information Booklet (US) or ''Tire Safety Information'' in the Warranty and Roadside Assistance Information booklet (Canada).**

All Season tires

NISSAN specifies All Season tires on some models to provide good performance all year round, including snowy and icy road conditions. All Season tires are identified by ''ALL SEASON'' and/or ''M&S'' on the tire sidewall. Snow tires have better snow traction than All Season tires and may be more appropriate in some areas.

Summer tires

NISSAN specifies summer tires on some models to provide superior performance on dry roads. Summer tire performance is substantially reduced in snow and ice. Summer tires do not have the tire traction rating ''M&S'' on the tire sidewall.

If you plan to operate your vehicle in snowy or icy conditions, NISSAN recommends the use of ‘‘SNOW’’ tires or ‘‘ALL SEASON’’ tires on all four wheels.

Snow tires

If snow tires are needed, it is necessary to select tires equivalent in size and load rating to the original equipment tires. If you do not, it can adversely affect the safety and handling of your vehicle.

Generally, snow tires have lower speed ratings than factory equipped tires and may not match the potential maximum vehicle speed. Never exceed the maximum speed rating of the tire.

If you plan to operate your vehicle in snowy or icy conditions, NISSAN recommends the use of ‘‘SNOW’’ tires or ‘‘ALL SEASON’’ tires on all four wheels.

For additional traction on icy roads, studded tires may be used. However, some U.S. states and Canadian provinces prohibit their use. Check local, state and provincial laws before installing studded tires. Skid and traction capabilities of studded snow tires on wet or dry surfaces may be poorer than that of non-studded snow tires.

TIRE CHAINS

Use of tire chains may be prohibited according to location. Check the local laws before installing tire chains. When installing tire chains, make sure they are of proper size for the tires on your vehicle and are installed according to the chain manufacturer’s suggestions. **Use only SAE class “S” chains.** Other types may damage your vehicle. Use chain tensioners when recommended by the tire chain manufacturer to ensure a tight fit. Loose end links of the tire chain must be secured or removed to prevent the possibility of whipping action damage to the fenders or underbody. If possible, avoid fully loading your vehicle when using tire chains. In addition, drive at a reduced speed. Otherwise, your vehicle may be damaged and/or vehicle handling and performance may be adversely affected.

Never install tire chains on a TEMPORARY USE ONLY spare tire. Do not use tire chains on dry roads.

Tire chains must be installed only on the front wheels and not on the rear wheels.

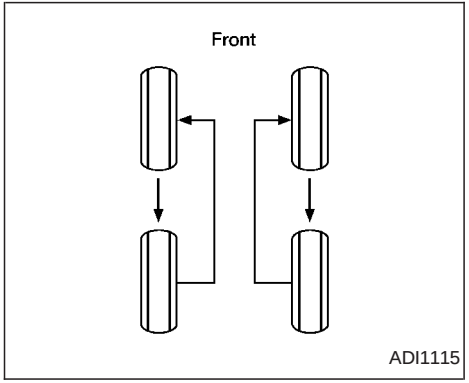

CHANGING WHEELS AND TIRES

Tire rotation

Tire should be rotated every 7,500 miles (12,000 km).

See ‘‘Flat tire’’ in the ‘‘In case of emergency’’ section for tire replacing procedures.

As soon as possible, tighten the wheel nuts to the specified torque with a torque wrench.

Wheel nut tightening torque:

80 ft-lb (108 N·m)

The wheel nuts must be kept tightened to specifications at all times. It is recommended that wheel nuts be tightened to specification at each tire rotation interval.

⚠ WARNING

- **After rotating the tires, check and adjust the tire pressure.**
- **Retighten the wheel nuts when the vehicle has been driven for 600 miles (1,000 km) (also in cases of a flat tire, etc.).**
- **Do not include the spare tire in the tire rotation.**
- **For additional information regarding tires, refer to ‘‘Important Tire Safety Information’’ in the Warranty Information Booklet (US) or ‘‘Tire Safety Information’’ in the Warranty and Roadside Assistance Information booklet (Canada).**

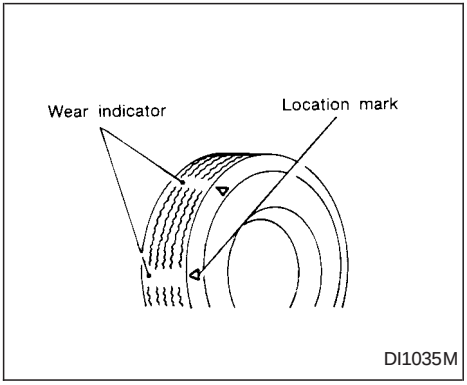

Tire wear and damage

⚠ WARNING

- **Tires should be periodically inspected for wear, cracking, bulging, or objects caught in the tread. If excessive wear, cracks, bulging, or deep cuts are found, the tire(s) should be replaced.**
- **The original tires have a built-in tread wear indicator. When the wear indicator is visible, the tire(s) should be replaced.**
- **Improper service of the spare tire may result in serious personal injury. If it is necessary to repair the spare tire, contact an authorized NISSAN dealer.**
- **For additional information regarding tires, refer to ‘‘Important Tire Safety Information’’ in the Warranty Information Booklet (US) or ‘‘Tire Safety Information’’ in the Warranty and Roadside Assistance Information booklet (Canada).**

Replacing tires and wheels

When replacing a tire, use the same size, tread design, speed rating and load carrying capacity as originally equipped. Recommended types and sizes are shown in ‘‘Wheel/Tire Size’’ of the ‘‘Technical and consumer information’’ section of this manual.

⚠ WARNING

- **The use of tires other than those recommended, or the mixed use of tires of different brands, construction(bias, bias-belted, radial), or tread patterns can adversely affect the ride,**

braking, handling, ground clearance, body-to-tire clearance, tire chain clearance, speedometer calibration, headlight aim and bumper height. Some of these effects may lead to accidents and could result in serious personal injury.

- **If the wheels are changed for any reason, always replace with wheels which have the same off-set dimension. Wheels of a different offset could cause premature tire wear, degrade vehicle handling characteristics and/or interference with the brake discs/drums. Such interference can lead to decreased braking efficiency and/or early brake pad/shoe wear. Refer to "Wheel/tire size" in the "Technical and consumer information" section of this manual for wheel off-set dimensions.**
- **Do not install a deformed wheel or tire even if it has been repaired. Such wheels or tires could have unknown structural damage and could fail without warning.**
- **The use of retread tires is not recommended.**
- **For additional information regarding tires, refer to ''Important Tire Safety Information'' in the Warranty Information Booklet (US) or ''Tire Safety Information'' in the Warranty and Roadside Assistance Information booklet (Canada).**

Wheel balance

Unbalanced wheels may affect vehicle handling and tire life. Even with regular use, wheels can get out of balance. Therefore, they should be balanced as required.

Wheel balance service should be performed with the wheels off the vehicle. Spin balancing the front wheels on the vehicle could lead to transmission damage.

- **For additional information regarding tires, refer to ''Important Tire Safety Information'' in the Warranty Information Booklet (US) or ''Tire Safety Information'' in the Warranty and Roadside Assistance Information booklet (Canada).**

Care of wheels

- Wash the wheels when washing the vehicle to maintain their appearance.
- Clean the inner side of the wheels when the wheel is changed or the underside of the vehicle is washed.
- Do not use abrasive cleaners when washing the wheels.
- Inspect wheel rims regularly for dents or corrosion. Such damage may cause loss of pressure or poor seal at the tire bead.
- NISSAN recommends waxing the road wheels to protect against road salt in areas where it is used during winter.

Spare tire (TEMPORARY USE ONLY)

Observe the following precautions if the TEMPORARY USE ONLY spare tire must be used, otherwise your vehicle could be damaged or involved in an accident:

WARNING

- The spare tire should be used for emergency use only. It should be replaced with the standard tire at the first opportunity to avoid possible tire or differential damage.
- Drive carefully while the TEMPORARY USE ONLY spare tire is installed. Avoid sharp turns and abrupt braking while driving.
- Periodically check spare tire inflation pressure. Always keep the pressure of the TEMPORARY USE ONLY spare tire at 60 psi (420 kPa, 4.2 bar).
- With the TEMPORARY USE ONLY spare tire installed do not drive the vehicle at speeds faster than 50 MPH (80 km/h).
- When driving on roads covered with snow or ice, the TEMPORARY USE ONLY spare tire should be used on the rear wheels and the original tire used on the front wheels (drive wheels). Use tire chains only on the front (original) tires.
- Tire tread of the TEMPORARY USE ONLY spare tire will wear at a faster rate than the standard tire. Replace the spare tire as soon as the tread wear indicators appear.
- Do not use the spare tire on other vehicles.
- Do not use more than one spare tire at the same time.
- Do not tow a trailer when the TEMPORARY USE ONLY spare tire is installed.

CAUTION

- Do not use tire chains on the TEMPORARY USE ONLY spare tire. Tire chains will not fit properly and may cause damage to the vehicle.
- Because the TEMPORARY USE ONLY spare tire is smaller than the original tire, ground clearance is reduced. To avoid damage to the vehicle, do not drive over obstacles. Also, do not drive the vehicle through an automatic car wash since it might get caught.

9 Technical and consumer information

Capacities and recommended fuel/lubricants.....9-2
Fuel recommendation.....9-3
Engine oil and oil filter recommendation.....9-5
Recommended SAE viscosity number.....9-6
Air conditioner system refrigerant and lubricant recommendations 9-7
Specifications 9-8
Engine 9-8
Wheels and tires.....9-9
Dimensions and weights 9-9
When traveling or registering your vehicle in another country 9-10
Vehicle identification 9-10
Vehicle identification number (VIN) plate.....9-10
Vehicle identification number (chassis number) 9-10
Engine serial number 9-11
F.M.V.S.S. certification label 9-11
Emission control information label 9-12
Tire placard.....9-12
Air conditioner specification label.....9-12
Installing front license plate.....9-13
Vehicle loading information.....9-14
Terms.....9-14
Determining vehicle load capacity.....9-14
Loading tips 9-14
Towing a trailer.....9-15
Maximum load limits.....9-15
Towing load/specification chart 9-16
Towing safety 9-16
Uniform tire quality grading.....9-19
Emission control system warranty 9-20
Reporting safety defects (US only).....9-20
Readiness for inspection/maintenance (I/M) test (US only) 9-21
Owner's manual/service manual order information.....9-22
In the event of a collision 9-23

CAPACITIES AND RECOMMENDED FUEL/ LUBRICANTS

The following are approximate capacities. The actual refill capacities may be a little different. When refilling, follow the procedure instructed in the ‘‘Do-it-yourself’’ section to determine the proper refill capacity.

		Capacity (Approximate)			Recommended Fluids and Lubricants
		US measure	Imp measure	Liter	
Fuel		13-1/4 gal	11 gal	50	Unleaded gasoline with an octane rating of at least 87 AKI (RON 91)*1
Engine oil *7					● API Certification Mark *2 *3 ● API grade SG/SH, Energy Conserving I & II or API grade SJ, Energy Conserving *2 *3 ● ILSAC grade GF-I & GF-II *2 *3
Drain and refill					
With oil filter change	QG18DE	2-7/8 qt	2-3/8 qt	2.7	
	QR25DE	4-1/8 qt	3-3/8 qt	3.9	
Without oil filter change	QG18DE	2-5/8 qt	2-1/4 qt	2.5	
	QR25DE	3-7/8 qt	3-1/4 qt	3.7	
Cooling system					50% Genuine NISSAN Anti-freeze coolant or equivalent 50% Demineralized or distilled water
Without reservoir					
Manual transmission:	QR25DE	6-1/2 qt	5-3/8 qt	6.1	
	QG18DE	6-3/8 qt	5-1/4 qt	6.0	
Automatic transmission:	QR25DE	6-3/8 qt	5-1/4 qt	6.0	
	QG18DE	6-1/4 qt	5-1/4 qt	5.9	
Manual transmission gear oil	RS5F70A/V	6-3/8 pt	5-1/4 pt	3.0	API GL-4, Viscosity SAE 75W - 85 only
	RS5F51A, RS6F51H	4-7/8 qt	4 pt	2.3	
Automatic transmission fluid		Refill to the proper level according to the instructions in the ‘‘Do-it-yourself’’ section.			NISSAN Matic ‘D’ (Continental U.S. and Alaska) or Canada NISSAN Automatic Transmission Fluid.*4
Power steering fluid					Genuine NISSAN PSF II or equivalent.*8
Brake and clutch fluid					Genuine NISSAN Brake Fluid*5 or equivalent DOT 3 (US FMVSS No. 116)
Multi-purpose grease		—	—	—	NLGI No. 2 (Lithium Soap base)
Air conditioning system refrigerant		—	—	—	HFC-134a (R-134a)*6
Air conditioning system lubricants					NISSAN A/C System Lubricant Type R or equivalent*6

*1: For further details, see ‘‘Fuel recommendation.’’
*2: For further details, see ‘‘Engine oil and oil filter recommendations.’’
*3: For further details, see ‘‘Recommended SAE engine oil viscosity.’’
*4: Dexron™ III/Mercon™ or equivalent may also be used. Outside the Continental United States and Alaska contact an authorized NISSAN dealership for more information regarding suitable fluids, including recommended brand(s) of Dexron™ III/Mercon™ Automatic Transmission Fluid.
*5: Available in mainland USA through your authorized NISSAN dealer.
*6: For further details, see “Air conditioner specification label.”
*7: For further details, see ‘‘Changing engine oil.’’
*8: Genuine NISSAN PSF, Canada NISSAN Automatic Transmission Fluid, Dexron™ III/Mercon™, or equivalent ATF may also be used.

FUEL RECOMMENDATION

For 1.8L/2.5L engines

Use unleaded regular gasoline with an octane rating of at least 87 AKI (Anti-Knock Index) number (Research octane number 91).

For SE-R SPEC V

Use unleaded regular gasoline with an octane rating of at least 87 AKI (Anti-Knock Index) number (Research octane number 91).

For improved vehicle performance, NISSAN recommends the use of unleaded premium gasoline with an octane rating of at least 91 AKI number (Research octane number 96).

Reformulated Gasoline

Some fuel suppliers are now producing reformulated gasolines. These gasolines are specially designed to reduce vehicle emissions. NISSAN supports efforts towards cleaner air and suggests that you use reformulated gasoline when available.

Gasoline containing oxygenates

Some fuel suppliers sell gasoline containing oxygenates such as ethanol, MTBE and methanol with or without advertising their presence. NISSAN does not recommend the use of fuels of which the oxygenate content and the fuel compatibility for your NISSAN cannot be readily determined. If in doubt, ask your service station manager.

If you use oxygenate-blend gasoline, please take the following precautions as the usage of such fuels may cause vehicle performance problems and/or fuel system damage.

- **The fuel should be unleaded and have an octane rating no lower than that recommended for unleaded gasoline.**
- **If an oxygenate-blend other than a methanol blend is used, it should contain no more than 10% oxygenate. (MTBE may, however, be added up to 15%.)**
- **If a methanol blend is used, it should contain no more than 5% methanol (methyl alcohol, wood alcohol). It should also contain a suitable amount of appropriate cosolvents and corrosion inhibitors. If not properly formulated with appropriate cosolvents and corrosion inhibitors, such methanol blends may cause fuel system damage and/or vehicle performance problems. At this time, sufficient data is not available to ensure that all methanol blends are suitable for use in NISSAN vehicles.**

If any driveability problems such as engine stalling and hard hot-starting are experienced after using oxygenate-blend fuels, immediately change to a non-oxygenate fuel or a fuel with a low blend of MTBE.

Take care not to spill gasoline during refueling. Gasoline containing oxygenates can cause paint damage.

Aftermarket Fuel Additives

NISSAN does not recommend the use of any fuel additives (i.e., fuel injector cleaners, octane boosters, intake valve deposit removers, etc.) which are sold commercially. Many of these additives intended for gum, varnish or deposit removal may contain active solvents or similar ingredients that can be harmful to the fuel system and engine.

Octane rating tips

In most parts of North America, you should use unleaded gasoline with an octane rating of at least 87 AKI (Anti-Knock Index). How-

ever, you may use unleaded gasoline with an octane rating as low as 85 AKI (Anti-Knock Index) in high altitude areas (over 4,000 ft [1,219 m]) such as: Colorado, Montana, New Mexico, Utah, Wyoming, northeastern Nevada, southern Idaho, western South Dakota, western Nebraska, and the part of Texas which is directly south of New Mexico.

Using unleaded gasoline with an octane rating lower than stated above can cause persistent, heavy ‘‘spark knock.’’ (‘‘Spark knock’’ is a metallic rapping noise.) If severe, this can lead to engine damage. If you detect a persistent heavy spark knock even when using gasoline of the stated octane rating, or if you hear steady spark knock while holding a steady speed on level roads, have an authorized NISSAN dealer correct the condition. Failure to correct the condition is misuse of the vehicle, for which NISSAN is not responsible.

Incorrect ignition timing may result in spark knock, after-run and/or overheating, which may cause excessive fuel consumption or engine damage. If any of the above symptoms are encountered, have your vehicle checked at an authorized NISSAN dealer or other competent service facility.

However, now and then you may notice light spark knock for a short time while accelerating or driving up hills. This is not a cause for concern, because you get the greatest fuel benefit when there is light spark knock for a short time under heavy engine load.

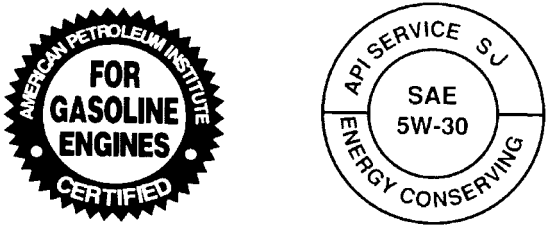

ENGINE OIL AND OIL FILTER RECOMMENDATION

Selecting the correct oil

It is essential to choose engine oil with the correct quality and viscosity to ensure satisfactory engine life and performance. NISSAN recommends the use of a low friction oil (energy conserving oil) in order to improve fuel economy and conserve energy. Oils which do not have the specified quality label should not be used as they could cause engine damage.

Only those engine oils with the American Petroleum Institute (API) CERTIFICATION MARK on the front of the container should be used. This type of oil supersedes the existing API SG, SH, or SJ and Energy Conserving I & II categories.

If you cannot find engine oil with the API CERTIFICATION MARK, use an API grade SG/SH, Energy Conserving I & II or API grade SJ, Energy Conserving oil. An oil with a single designation SG or SH, or in combination with other categories (for example, SG/CC or SG/CD) may also be used if one with the API CERTIFICATION MARK cannot be found. An ILSAC grade GF-I & GF-II oil can also be used.

Mineral based or synthetic type oils may be used in your NISSAN vehicle. However, these oils must meet the API quality and SAE viscosity ratings specified for your vehicle. Do not mix mineral based and synthetic type oils in the engine.

Oil additives

NISSAN does not recommend the use of oil additives. The use of an oil additive is not necessary when the proper oil type is used and maintenance intervals are followed.

Oil which may contain foreign matter or has been previously used should not be used.

Oil viscosity

The engine oil viscosity or thickness changes with temperature. Because of this, it is important to select the engine oil viscosity based on the temperatures at which the vehicle will be operated before the next oil change. The chart ‘‘Recommended SAE viscosity number’’ shows the recommended oil viscosities for the expected ambient temperatures. Choosing an oil viscosity other than that recommended could cause serious engine damage.

Selecting the correct oil filter

Your new NISSAN vehicle is equipped with a high-quality genuine NISSAN oil filter. When replacing, use a genuine NISSAN oil filter or its equivalent for the reason described in ‘‘Change intervals’’.

Change intervals

The oil and oil filter change intervals for your engine are based on the use of the specified quality oils and filters. Oil and filter other than the specified quality, or oil and filter change intervals longer than recommended could reduce engine life. Damage to the engine caused by improper maintenance or use of incorrect oil and filter quality and/or viscosity is not covered by the new NISSAN vehicle warranties.

Your engine was filled with a high quality engine oil when it was built. You do not have to change the oil before the first recommended change interval. Oil and filter change intervals depend upon how you use your vehicle.

Operation under the following conditions may require more frequent oil and filter changes:

— repeated short distance driving at cold outside temperatures,

— driving in dusty conditions,

— extensive idling,

— towing a trailer.

RECOMMENDED SAE VISCOSITY NUMBER

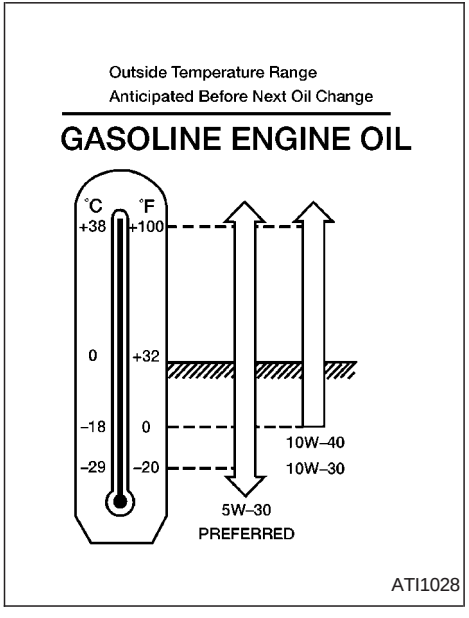

- **SAE 5W-30 viscosity oil is preferred for all temperatures. SAE 10W-30, SAE 10W-40 viscosity oils may be used if the ambient temperature is above 0°F (-18°C).**

AIR CONDITIONER SYSTEM REFRIGERANT AND LUBRICANT RECOMMENDATIONS

The air conditioner in your NISSAN vehicle must be charged with the refrigerant HFC-134a (R-134a) and the lubricant, NISSAN A/C system oil Type R or the exact equivalents.

⚠ CAUTION

The use of any other refrigerant or lubricant will cause severe damage to the air conditioning system and will require the replacement of all air conditioner system components.

The refrigerant HFC-134a (R-134a) in your NISSAN vehicle does not harm the earth's ozone layer. Although this refrigerant does not affect the earth's atmosphere, certain governmental regulations require the recovery and recycling of any refrigerant during automotive air conditioner system service. Your authorized NISSAN dealer has the trained technicians and equipment needed to recover and recycle your air conditioner system refrigerant.

Contact your authorized NISSAN dealer when servicing your air conditioner system.

SPECIFICATIONS

ENGINE

Model			QG18DE	QR25DE
Type			Gasoline, 4-cycle, DOHC	Gasoline, 4-cycle, DOHC
Cylinder arrangement			4-cylinder in-line	4-cylinder in-line
Bore × Stroke	in (mm)		3.150 × 3.465 (80.0 × 88.0)	3.504 x 3.937 (89.0 x 100.0)
Displacement	cu in (cm^3)		107.94 (1,769)	152.55 (2,500)
Firing order			1-3-4-2	1-3-4-2
Idle speed	rpm			
Ignition timing degree (B.T.D.C.) at idle speed	degree/rpm		See the ''Emission Control label'' on the underside of the hood.	
CO percentage at idle speed [No air]	%			
			Platinum-tipped type	Platinum-tipped type
Spark plug		Hot	PLFR4A-11 *1	PLFR4A-11 *1
		Standard	PLFR5A-11 *1	PLFR5A-11 *1
		Cold	PLFR6A-11 *1	PLFR6A-11 *1
Camshaft operation			Timing chain	Timing chain
Spark plug gap (Nominal)	in (mm)		0.043 (1.1)	0.043 (1.1)
Generator belt size Width × Length	in (mm)		0.843 x 32.28, (21.4 x 820) 0.843 x 44.09, (21.4 x 1,120)*1	0.559 x 32.68, (14.2 x 830) 0.843 x 40.75, (21.4 x 1,035)*1

*1: Always check with the Parts Department at an authorized NISSAN dealer for the latest parts information.
*2: With air conditioner

The spark ignition system of this vehicle meets all requirements of the Canadian Interference-Causing Equipment Regulations.

WHEELS AND TIRES

	Wheel Dimension	Offset in (mm)
Road wheel		
14″ steel w/bottom cover	14 × 5.5JJ	1.57 (40)
15″ aluminum alloy	15 x 6JJ	1.77 (45)
16″ aluminum alloy	16 × 6JJ	1.77 (45)
17″ aluminum alloy	17 x 7JJ	1.85 (47)
Conventional tire size		
P185/65R/14	14 x 5.5JJ	
P195/60R/15	15 x 6JJ	
P195/55R/16	16 x 6JJ	
P215/45ZR17	17 x 7JJ	
Spare tire size		
T115/70*14	14 × 4T	
T125/70*15	15 x 4T	
T135/90*15	15 x 4T	

*: “R” or “D” depending on tire manufacturer

DIMENSIONS AND WEIGHTS

			SENTRA
Overall length		in (mm)	177.4 (4505)
Overall width		in (mm)	67.3 (1710)
Overall height		in (mm)	55.5 (1410)
Front tread	14 inch	in (mm)	58.3 (1480)
	15/16 inch	in (mm)	57.9 (1470)
	17 inch	in (mm)	57.7 (1466)
Rear tread	14 inch	in (mm)	57.5 (1460)
	15/16 inch	in (mm)	57.1 (1450)
	17 inch	in (mm)	56.9 (1446)
Wheelbase		in (mm)	99.8 (2,535)
Gross vehicle weight rating		lb (kg)	See the ‘‘F.M.V.S.S. certification label’’ on the center pillar between the driver’s side front and rear doors.
Gross axle weight rating			
Front		lb (kg)	
Rear		lb (kg)	

WHEN TRAVELING OR REGISTERING YOUR VEHICLE IN ANOTHER COUNTRY

When planning to travel in another country, you should first find out if the fuel available is suitable for your vehicle's engine.

Using fuel with too low an octane/cetane rating may cause engine damage. All gasoline vehicles must be operated with unleaded gasoline. Therefore, avoid taking your vehicle to areas where appropriate fuel is not available.

When transferring the registration of your vehicle to another country, state, province or district, it may be necessary to modify the vehicle to meet local laws and regulations.

The laws and regulations for motor vehicle emission control and safety standards vary according to the country, state, province or district. Therefore, vehicle specifications may differ.

When any vehicle is to be taken into another country, state, province or district and registered, its modifications, transportation, and registration are the responsibility of the user. NISSAN is not responsible for any inconvenience that may result.

VEHICLE IDENTIFICATION

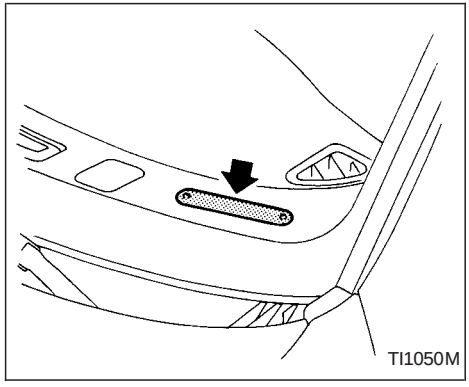

VEHICLE IDENTIFICATION NUMBER (VIN) PLATE

The vehicle identification number (VIN) plate is attached to the top of the instrument panel on the driver's side. This number is the identification for your vehicle and is used in the vehicle registration.

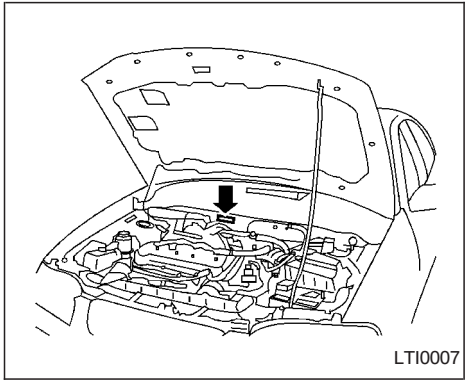

VEHICLE IDENTIFICATION NUMBER (Chassis number)

The chassis number is stamped as shown.

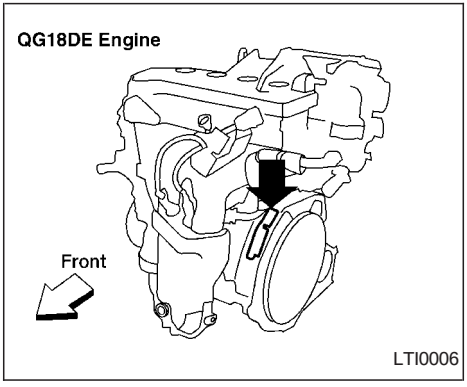

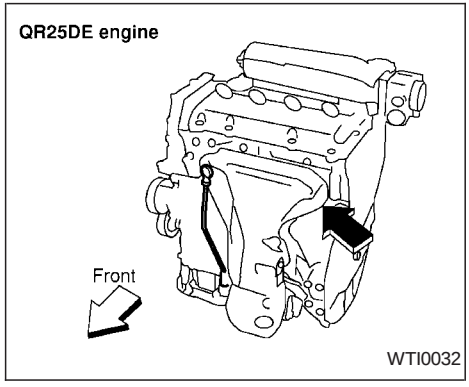

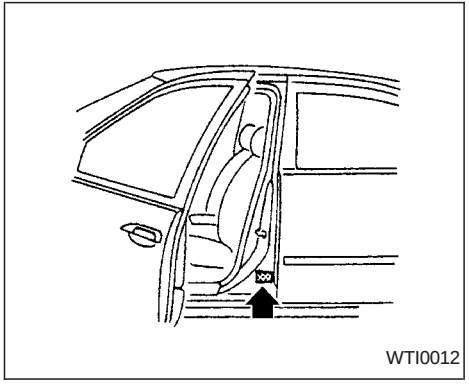

ENGINE SERIAL NUMBER

The engine serial number is stamped on the engine as shown.

F.M.V.S.S. CERTIFICATION LABEL

The Federal Motor Vehicle Safety Standard (F.M.V.S.S.) certification label is affixed as shown. This label contains valuable vehicle information, such as: Gross Vehicle Weight Ratings (GVWR), Gross Axle Weight Rating (GAWR), month and year of manufacture, Vehicle Identification Number, (VIN), etc. Review it carefully.

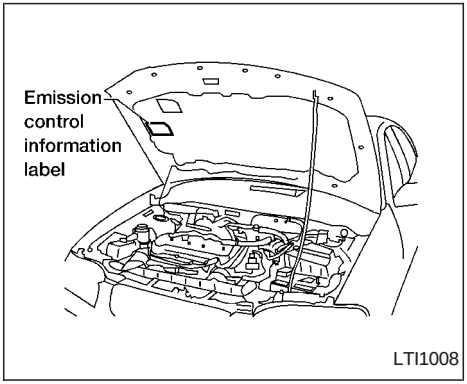

EMISSION CONTROL INFORMATION LABEL

The emission control information label is attached as shown.

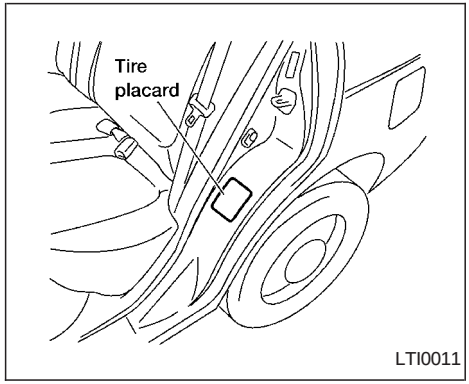

TIRE PLACARD

The cold tire pressure is shown on the tire placard affixed to the driver's side rear door pillar.

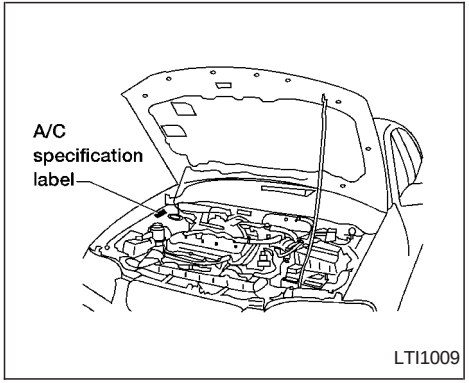

AIR CONDITIONER SPECIFICATION LABEL

The air conditioner specification label is affixed as shown.

INSTALLING FRONT LICENSE PLATE

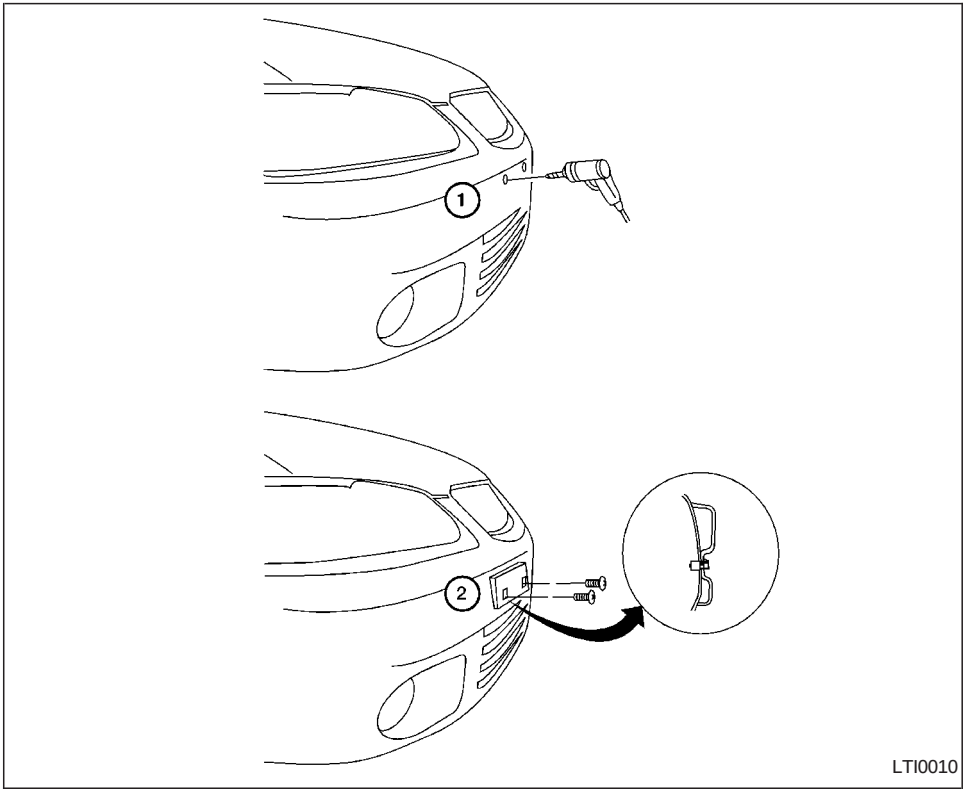

Use the following steps to mount the front license plate:

1. Make holes on the plastic finisher at the location mark (small dimple) using a 0.31 in (8 mm) drill. Apply light pressure to the drill. Install the license plate holder using the two screws provided with the holder.
2. Mount the license plate **using two M6-14mm bolts.**

   License plate bolt tightening torque:

   3.8 to 4.7 ft-lb (5.10 to 6.37 N·m)

VEHICLE LOADING INFORMATION

⚠ WARNING

- **It is extremely dangerous to ride in a cargo area inside the vehicle. In a collision, people riding in these areas are more likely to be seriously injured or killed.**
- **Do not allow people to ride in any area of the vehicle that is not equipped with seats and seat belts.**
- **Be sure everyone in the vehicle is in a seat with their seat belt properly fastened.**

TERMS

It is important to familiarize yourself with the following terms before loading your vehicle:

- Curb Weight (actual weight of your vehicle) - vehicle weight including: standard and optional equipment, fluids, emergency tools, and spare tire assembly. This weight **does not** include passengers and cargo.
- GVW (Gross Vehicle Weight) - curb weight plus the combined weight of passengers and cargo.
- GVWR (Gross Vehicle Weight Rating) - maximum total weight (load) limit specified for the vehicle.
- GAWR (Gross Axle Weight Rating) - maximum weight (load) limit specified for the front or rear axle.

DETERMINING VEHICLE LOAD CAPACITY

The load capacity of this vehicle is determined by weight, not by available cargo space. For example, a luggage rack, bike carrier, cartop carrier or similar equipment does not increase the load carrying capacity of your vehicle.

To determine vehicle load capacity:

Vehicle weight can be determined by using a commercial-grade scale, found at places such as a truck stop, gravel quarry, grain elevator, or a scrap metal recycling facility.

1) Determine the curb weight of your vehicle.
2) Compare the curb weight amount to the GVWR specified for your vehicle to determine how much more weight your vehicle can carry.
3) After loading (cargo and passengers), re-weigh your vehicle to determine if either GVWR or GAWR for your vehicle is exceeded. If GVWR is exceeded, remove cargo as necessary. If either the front or rear GAWR is exceeded, shift the load or remove cargo as necessary.

LOADING TIPS

- The GVW must not exceed GVWR or GAWR as specified on the F.M.V.S.S. Certification Label.
- Do not load the front and rear axle to the GAWR. Doing so will exceed the GVWR.

⚠ WARNING

- **Properly secure all cargo to help prevent it from sliding or shifting. Do not place cargo higher than the seatbacks. In a sudden stop or collision, unsecured cargo could cause personal injury.**
- **Do not load your vehicle any heavier than the GVWR or the maximum front and rear GAWRs. If you do, parts of your vehicle can break, tire damage could occur, or it can change the way your vehicle handles. This could result in loss of control and cause personal injury.**

- **Overloading can shorten the life of the vehicle. Failures caused by overloading are not covered by the vehicle's warranty.**

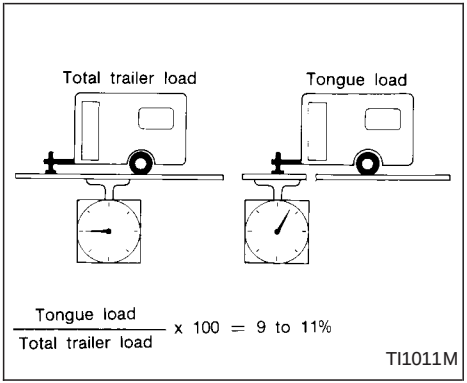

Your new vehicle was designed to be used primarily to carry passengers and cargo. Remember that towing a trailer places additional loads on your vehicle's engine, drive train, steering, braking and other systems.

A Nissan Trailer Towing Guide (U.S. only) containing information on trailer towing ability and the special equipment required may be obtained from an authorized NISSAN dealer.

MAXIMUM LOAD LIMITS

Maximum trailer loads

Never allow the total trailer load to exceed 1,000 lb (454 kg). The total trailer load equals trailer weight plus its cargo weight. Towing loads greater than 1,000 lb (454 kg) or using improper towing equipment could adversely affect vehicle handling, braking and performance.

The ability of your vehicle to tow a trailer is not only related to the maximum trailer loads, but also the places you plan to tow. Tow weights appropriate for level highway driving may have to be reduced on very steep grades or in low traction situations (for example, on slippery boat ramps).

⚠ WARNING

Vehicle damage and/or personal injury resulting from improper towing procedures are not covered by NISSAN warranties. A NISSAN Trailer Towing Guide (U.S. only) containing information on trailer towing ability and the special equipment required may be obtained from an authorized NISSAN dealer.

Tongue load

Keep the tongue load between 9 and 11% of the total trailer load. If the tongue load becomes excessive, rearrange cargo to allow for proper tongue load.

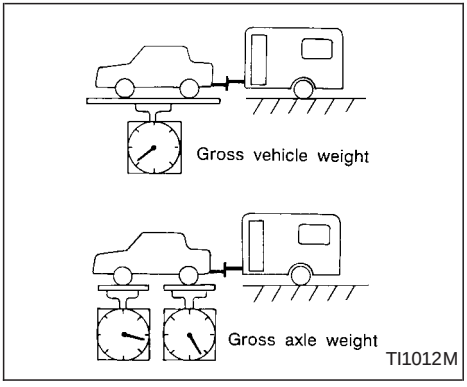

Maximum gross vehicle weight/maximum gross axle weight

The gross vehicle weight of the towing vehicle must not exceed the gross vehicle weight rating (GVWR) shown on the F.M.V.S.S. certification label. The gross vehicle weight equals the combined weight of the unloaded vehicle, passengers, luggage, hitch, trailer tongue load and any other optional equipment. In addition, front or rear gross axle weight must not exceed the gross axle weight rating (GAWR) shown on the F.M.V.S.S. certification label.

TOWING LOAD/SPECIFICATION CHART

TOWING LOAD / SPECIFICATION CHART UNIT: lb (kg)	
MAXIMUM TOWING LOAD	1,000 (454)
MAXIMUM TONGUE LOAD	110 (49)

TOWING SAFETY

Trailer hitch

Choose a proper hitch for your vehicle and trailer. A genuine NISSAN trailer hitch is available from your NISSAN dealer (Canada only). Make sure the trailer hitch is securely attached to the vehicle to help avoid personal injury or property damage due to sway caused by crosswinds, rough road surfaces or passing trucks.

⚠ CAUTION

- **Do not use axle-mounted hitches.**
- **The hitch should not be attached to or affect the operation of the impact-absorbing bumper.**

- **Do not modify the vehicle exhaust system, brake system, etc. to install a trailer hitch.**
- **To reduce the possibility of additional damage if your vehicle is struck from the rear, where practical, remove the hitch and/or receiver when not in use.**
- **After the hitch is removed, seal the bolt holes to prevent exhaust fumes, water or dust from entering the passenger compartment.**
- **Regularly check that all hitch mounting bolts are securely mounted.**

Tire pressures

- When towing a trailer, inflate the vehicle tires to the recommended cold tire pressure indicated on the tire placard (located on the driver's side rear door pillar).
- Trailer tire condition, size, load rating and proper inflation pressure should be in accordance with the trailer and tire manufacturers' specifications.

Safety chains

Always use suitable safety chains between your vehicle and the trailer. Safety chains should be crossed and should be attached to the hitch, not to the vehicle bumper or axle. Be sure to leave enough slack in the chains to permit turning corners.

Trailer lights

Trailer lights should comply with federal and/ or local regulations. When wiring the vehicle for towing, connect the stop and tail light pickup into the vehicle electrical circuit.

Trailer brakes

If your trailer is equipped with a braking system, make sure it conforms to federal and/or local regulations and that it is properly installed.

⚠ WARNING

Never connect a trailer brake system directly to the vehicle brake system.

Pre-towing tips

- Be certain your vehicle maintains a level position when a loaded and/or unloaded trailer is hitched. Do not drive the vehicle if it has an abnormal nose-up or nose- down condition; check for improper tongue load, overload, worn suspension or other possible causes of either condition.
- Always secure items in the trailer to prevent load shift while driving.
- Be certain your rear view mirrors conform to all federal, state or local regulations. If not, install any mirrors required for towing before driving the vehicle.

Trailer towing tips

In order to gain skill and an understanding of the vehicle's behavior, you should practice turning, stopping and backing up in an area which is free from traffic. Steering, stability, and braking performance are somewhat different than under normal driving conditions.

- Always secure items in the trailer to prevent load shift while driving.
- Avoid abrupt starts, acceleration or stops.
- Avoid sharp turns or lane changes.
- Always drive your vehicle at a moderate speed.

- Always block the wheels on both vehicle and trailer when parking. Parking on a slope is not recommended; however, if you must do so, and if your vehicle is equipped with an automatic transmission, first block the wheels and apply the parking brake, and then move the transmission shift selector lever into the P (Park) position. If you move the shift selector lever to the P (Park) position before blocking the wheels and applying the parking brake, transmission damage could occur.
- When going down a hill, shift into a lower gear and use the engine braking effect. When ascending a long grade, downshift the transmission to a lower gear and reduce speed to reduce chances of engine overloading and/or overheating.
- If the engine temperature coolant rises to an extremely high temperature when the air conditioning system is on, turn off the air conditioner. Coolant heat can be additionally vented by opening the windows, switching the fan control to high and setting the temperature control to the HOT position.
- Trailer towing requires more fuel than normal circumstances.
- Avoid towing a trailer for your vehicle's first 500 miles (800 km).
- Have your vehicle serviced more often than at intervals specified in the recommended Maintenance Schedule in the "NISSAN Service and Maintenance Guide".
- When making a turn, your trailer wheels will be closer to the inside of the turn than your vehicle wheels. To compensate for this, make a larger than normal turning radius during the turn.
- Crosswinds and rough roads adversely affect vehicle/trailer handling, possibly causing vehicle sway. When being passed by larger vehicles, be prepared for possible changes in crosswinds that could affect vehicle handling. If swaying does occur, firmly grip the steering wheel, steer straight ahead, and immediately (but gradually) reduce vehicle speed. This combination helps to stabilize the vehicle. Never increase speed.
- Be careful when passing other vehicles. Passing while towing a trailer requires considerably more distance than normal passing. Remember the length of the trailer must also pass the other vehicle before you can safely change lanes.
- To maintain engine braking efficiency and electrical charging performance, do not use fifth gear (manual transmission) or overdrive (automatic transmission).
- Avoid holding the brake pedal down too long or too frequently. This could cause the brakes to overheat, resulting in reduced braking efficiency.

When towing a trailer, change the oil in the transmission more frequently. For additional information see the ''Maintenance and do-it-yourself'' section earlier in this manual.

UNIFORM TIRE QUALITY GRADING

DOT Quality Grades: All passenger car tires must conform to Federal Safety Requirements in addition to these grades.

Quality grades can be found where applicable on the tire sidewall between tread shoulder and maximum section width. For example:

Treadwear 200 Traction AA Temperature A

Treadwear

Treadwear grade is a comparative rating based on tire wear rate when tested under controlled conditions on specified government test courses. For example, a tire graded 150 would wear one and a half (1-1/2) times as well on the government course as a tire graded 100. However, relative tire performance depends on actual driving conditions, and may vary significantly due to variations in driving habits, service practices and differences in road characteristics and climate.

Traction AA, A, B and C

The traction grades, from highest to lowest, are AA, A, B, and C. Those grades represent a tire's ability to stop on wet pavement as measured under controlled conditions, on specified government test surfaces of asphalt and concrete. A tire marked C may have poor traction performance.

⚠ WARNING

The traction grade assigned to your vehicle tires is based on straight-ahead braking traction tests, and does not include acceleration, cornering, hydroplaning, or peak traction characteristics.

Temperature A, B and C

Temperature grades are A (the highest), B, and C. They represent a tire's resistance to heat build-up, and its ability to dissipate heat when tested under controlled conditions on a specified indoor laboratory test wheel. Sustained high temperature can cause tire material to degenerate, reducing tire life. Excessive temperatures can lead to sudden tire failure. Grade C corresponds to a performance level which all passenger car tires must meet under the Federal Motor Vehicle Safety Standard No. 109. Grades A and B represent higher levels of performance on laboratory test wheels than the minimum required by law.

⚠ WARNING

The temperature grade for this tire is established for a tire that is properly inflated and not overloaded. Excessive speed, under-inflation, or excessive loading, either separately or in combination, can cause heat build-up and possible tire failure.

EMISSION CONTROL SYSTEM WARRANTY

Your NISSAN is covered by the following emission warranties.

For US

1) Emission Defects Warranty

2) Emission Performance Warranty

Details of these warranties may be found with other vehicle warranties in your Warranty Information Booklet that comes with your NISSAN vehicle. If you did not receive a Warranty Information Booklet, or it has become lost, you may obtain a replacement by writing to:

- Nissan North American, Inc.
  Consumer Affairs Department
  P.O. Box 191
  Gardena, CA. 90248-0191

For Canada

Emission Control System Warranty

Details of these warranties may be found with other vehicle warranties in your Warranty and Roadside Assistance Information Booklet that comes with your NISSAN vehicle. If you did not receive a Warranty and Roadside Assistance Information Booklet, or it has become lost, you may obtain a replacement by writing to:

- Nissan Canada Inc.
  5290 Orbitor Drive
  Mississauga, Ontario, L4W 4Z5

REPORTING SAFETY DEFECTS (US only)

If you believe that your vehicle has a defect which could cause a crash or could cause injury or death, you should immediately inform the National Highway Traffic Safety Administration (NHTSA) in addition to notifying NISSAN.

If NHTSA receives similar complaints, it may open an investigation, and if it finds that a safety defect exists in a group of vehicles, it may order a recall and remedy campaign. However, NHTSA cannot become involved in individual problems between you, your dealer, or NISSAN.

To contact NHTSA, you may either call the Auto Safety Hotline toll-free at (888) 327-4236. You may also write to: NHTSA, U.S. Department of Transportation, Washington, D.C. 20590. You can also obtain other information about motor vehicle safety from the Hotline.

You may notify NISSAN by contacting our Consumer Affairs Department, toll-free, at 1-800-NISSAN-1.

In Hawaii call (808) 836-0888.

READINESS FOR INSPECTION/MAINTENANCE (I/M) TEST (US only)

Due to legal requirements in some states and Canadian provinces, your vehicle may be required to be in the ready condition for an Inspection/Maintenance (I/M) test of the emission control system.

The vehicle is set to the ready condition when it is driven through certain driving patterns. Usually, the ready condition can be obtained by ordinary usage of the vehicle.

If a powertrain system component is repaired or the battery is disconnected, the vehicle may be reset to a not ready condition. Before taking the I/M test, drive the vehicle through the following pattern to set the vehicle to the ready condition. If you cannot or do not want to perform the driving pattern, an authorized NISSAN dealer can conduct it for you.

⚠ WARNING

Always drive the vehicle in a safe and prudent manner according to traffic conditions and obey all traffic laws.

1. Start the engine when the engine coolant temperature gauge needle points to C. Allow the engine to idle until the gauge needle points between the C and H (normal operating temperature).
2. Accelerate the vehicle to 55 mph (88 km/h), then quickly release the accelerator pedal completely and keep it released for at least 6 seconds.
3. Quickly depress the accelerator pedal for a moment, then drive the vehicle at a speed of 53 to 60 mph (86 to 96 km/h) for at least 5 minutes.
4. Stop the vehicle.
5. Accelerate the vehicle to 35 mph (55 km/h) and maintain the speed for 20 seconds.
6. Repeat steps four through five at least three times.
7. Accelerate the vehicle to 55 mph (88 km/h) and maintain the speed for at least 3 minutes.
8. Stop the vehicle [shift selector lever in the P (Park) or N (Neutral) position].
9. Rev the engine up between 2,500 and 3,500 rpm and hold it for 3 consecutive minutes, then release the accelerator pedal completely.
10. Wait 5 seconds at idle.
11. Rev the engine up between 2,000 and 3,000 rpm and maintain it for 5 consecutive minutes.
12. Stop the vehicle and turn the engine off.
13. Repeat steps one through twelve at least one more time.

If step one through seven is interrupted, repeat the preceding step. Any safe driving mode is acceptable between steps. Do not stop the engine until step seven is completed.

Genuine Nissan Service Manuals

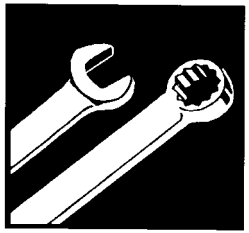

GET THE INSIDE STORY

OWNER'S MANUAL/SERVICE MANUAL ORDER INFORMATION

A genuine NISSAN Service Manual is the best source of service and repair information for your vehicle. Filled with wiring diagrams, illustrations and step-by-step diagnostic and adjustment procedures, this manual is the same one used by the factory trained technicians working at authorized NISSAN dealerships. Also available are genuine NISSAN Owner's Manuals, and genuine NISSAN Service and Owner's Manuals for older NISSAN models.

In the USA:

For current pricing and availability of genuine **NISSAN Service Manuals** for the 2000 model year and later, contact:

Tweddle Litho Company
1-800-639-8841
www.nissan-techinfo.com

For current pricing and availability of genuine **NISSAN Service Manuals** for the 1999 model year and prior, see an authorized NISSAN dealer, or contact:

DDS Distribution Services, Ltd.
20770 Westwood Road
Strongsville, OH 44136
1-800-247-5321

For current pricing and availability of genuine **NISSAN Owner's Manuals** for the 2002 model year and prior, see an authorized NISSAN dealer, or contact:

DDS Distribution Services, Ltd.
20770 Westwood Road
Strongsville, OH 44136
1-800-247-5321

In Canada:

To purchase a copy of a Genuine NISSAN Service Manual or Owner's Manual please contact your nearest NISSAN Dealer. For the phone number and location of a NISSAN Dealer in your area call the NISSAN Customer Service Information Center at 1-800-387-0122 and a bilingual NISSAN representative will assist you.

Also available are genuine NISSAN Service and Owner's Manuals for older NISSAN models.

IN THE EVENT OF A COLLISION

Unfortunately, accidents do occur. In this unlikely event, there is some important information you should know.

Many insurance companies routinely authorize the use of non-genuine collision parts in order to cut costs, among other reasons.

Insist on the use of Genuine NISSAN Collision Parts!

If you want your vehicle to be restored using parts made to NISSAN's original exacting specifications − if you want to help it to last and hold its resale value, the solution is simple. ***Tell your insurance agent and your repair shop to only use Genuine NISSAN Collision Parts.*** NISSAN does not warrant non-NISSAN parts, nor does NISSAN's warranty apply to damage caused by a non-genuine part.

Using Genuine NISSAN Parts can help protect your personal safety, preserve your warranty protection and maintain the resale value of your vehicle. And if your vehicle was leased, using Genuine NISSAN Parts may prevent or limit unnecessary excess wear and tear expenses at the end of your lease.

NISSAN designs its hoods with crumple zones to minimize the risk that the hood will penetrate the windshield of your vehicle in an accident. Non-genuine (imitation) parts may not provide such built in safeguards. Also, non-genuine parts often show premature wear, rust and corrosion.

Why should you take a chance?

In over 40 states, the law says you must be advised if non-genuine parts are used to repair your vehicle. And some states have enacted laws that restrict insurance companies from authorizing the use of non-genuine collision parts during the new vehicle warranty. These laws help protect you, so you can take action to protect yourself.

It's your right!

If you should need further information visit us at: *www.nissandriven.com.*

MEMO

10 Index

A

Air bag (See supplemental restraint system) 1-6
Air bag warning light 1-16, 2-9
Air cleaner housing filter..... 8-24
Air conditioner
- Air conditioner operation 4-5
- Air conditioner specification label..... 9-12
- Air conditioner system refrigerant and lubrication recommendations..... 9-7
- Heater and air conditioner controls 4-3
- Servicing air conditioner 4-9

Air flow charts 4-6
Alarm system (See vehicle security system) 2-11
Anchor point locations 1-34
Antenna..... 4-19
Anti-lock brake system (ABS)..... 5-19
Anti-lock brake warning light 2-7
Ashtray (See cigarette lighter and ashtray)..... 2-20
Audio system
- Compact Disc (CD) changer 4-17
- FM-AM radio with compact disc (CD) player 4-12

Automatic
- Automatic power window switch 2-25
- Automatic transmission fluid (ATF) 8-15
- Driving with automatic transmission..... 5-7
- Transmission selector lever lock release 5-10

B

Battery..... 8-19
Battery
- Charge warning light 2-8

Battery replacement (See remote keyless entry system) 3-8
Before starting the engine 5-6
Belts (See drive belts) 8-22
Brake
- Anti-lock brake system (ABS) 5-19
- Brake booster 8-30
- Brake fluid..... 8-18
- Brake light (See stop light)..... 8-40
- Brake pedal 8-30
- Brake system..... 5-19
- Brake warning light..... 2-8
- Brake wear indicators 2-11, 8-30
- Parking brake check..... 8-29
- Parking brake operation 5-13
- Self-adjusting brakes 8-30

Break-in schedule 5-16
Bulb check/instrument panel 2-7
Bulb replacement..... 8-40

C

Capacities and recommended fuel/lubricants..... 9-2
Car phone or CB radio 4-20
Cargo (See vehicle loading information)... 9-14
Child restraint with top tether strap 1-34
Child restraints..... 1-20, 1-25, 1-32
Child safety rear door lock 3-4
Cigarette lighter (accessory) and ashtray 2-20
Cleaning exterior and interior 7-2
Clock..... 4-13
Clutch
- Clutch fluid..... 8-18
- Clutch pedal..... 8-31

Cold weather driving..... 5-21
Controls
- Heater and air conditioner controls 4-3

Coolant
- Capacities and recommended fuel/lubricants 9-2
- Changing engine coolant..... 8-10
- Checking engine coolant level 8-9
- Engine coolant temperature gauge 2-5

Corrosion protection 7-5
Cruise control..... 5-14
Cup holders 2-21

D

Daytime running light system
(Canada only) 2-17
Defogger switch
Rear window defogger switch 2-16
Dimensions and weights..... 9-9
Door locks..... 3-3
Door open warning light 2-8
Drive belts..... 8-22
Driving
Cold weather driving..... 5-21
Driving with automatic transmission..... 5-7
Driving with manual transmission..... 5-11
Precautions when starting and driving... 5-2

E

Economy - fuel..... 5-16
Emission control information label..... 9-12
Emission control system warranty..... 9-20
Engine
Before starting the engine 5-6
Capacities and recommended fuel/
lubricants 9-2
Changing engine coolant..... 8-10
Changing engine oil..... 8-13
Changing engine oil filter..... 8-14
Checking engine coolant level 8-9
Checking engine oil level 8-12
Engine compartment check
locations 8-7, 8-8
Engine coolant temperature gauge..... 2-5
Engine cooling system 8-9
Engine oil..... 8-12
Engine oil and oil filter
recommendation..... 9-5
Engine oil pressure warning light..... 2-8
Engine oil viscosity..... 9-5
Engine serial number 9-11
Engine specifications..... 9-8
Starting the engine 5-7
Exhaust gas (Carbon monoxide)..... 5-2

F

Flashers (See hazard warning flasher
switch)..... 2-18
Flat tire..... 6-2
Floor mat positioning aid 7-4
Fluid
Automatic transmission fluid (ATF) 8-15
Brake fluid..... 8-18
Capacities and recommended fuel/
lubricants 9-2
Clutch fluid..... 8-18
Engine coolant..... 8-9
Engine oil..... 8-12
Power steering fluid..... 8-17
Window washer fluid 8-19
F.M.V.S.S. certification label 9-11
Front fog light switch 2-18
Front seats..... 1-2
Fuel
Capacities and recommended fuel/
lubricants 9-2
Fuel economy..... 5-16
Fuel filler cap..... 3-13
Fuel filler lid lock opener lever 3-13
Fuel gauge..... 2-5
Fuel octane rating..... 9-3
Fuel recommendation..... 9-3
Fuses 8-31
Fusible links..... 8-32

G

Gauge
Engine coolant temperature gauge..... 2-5
Fuel gauge..... 2-5
Odometer..... 2-3
Speedometer 2-3
Tachometer..... 2-4
Trip odometer 2-4
General maintenance 8-3
Glove box..... 2-22

H

Hazard warning flasher switch 2-18
Head restraints 1-5
Headlight aiming adjustment 8-37
Headlight and turn signal switch 2-16
Headlights 8-36
Heater
  Heater and air conditioner controls 4-3
  Heater operation 4-4
Hood release 3-9
Horn 2-19

I

Ignition switch 5-4
Immobilizer system 2-11, 3-2, 5-6
Increasing fuel economy 5-16
Indicator lights and audible reminders (See warning/indicator lights and audible reminders) 2-7
Inside mirror 3-16
Instrument brightness control 2-17
Interior light 2-27
Interior trunk lid release 3-12

J

Jump starting 6-8

K

Key 3-2
Keyless entry system (See remote keyless entry system) 3-5

L

Labels
  Air conditioner specification label 9-12
  Emission control information label 9-12
  Engine serial number 9-11
  F.M.V.S.S. certification label 9-11
  Vehicle identification number (VIN) plate 9-10
  Warning labels (for SRS) 1-16
LATCH (Lower Anchors and Tether for Children) System 1-32
License plate
  Installing the license plate 9-13
Light
  Air bag warning light 1-16, 2-9
  Brake light (See stop light) 8-40
  Bulb check/instrument panel 2-7
  Bulb replacement 8-40
  Charge warning light 2-8
  Front fog light switch 2-18
  Headlight aiming adjustment 8-37
  Headlight and turn signal switch 2-16
  Headlights 8-36
  Interior light 2-27
  Light bulbs 8-36
  Low washer fluid warning light 2-9
  Spotlights (See map light) 2-27
  Trunk light 2-28
  Warning/indicator lights and audible reminders 2-7
Lock
  Child safety rear door lock 3-4
  Door locks 3-3
  Fuel filler lid lock opener lever 3-13
  Power door locks 3-4
  Trunk lid lock opener lever 3-10

M

Maintenance
  General maintenance 8-3
  Inside the vehicle 8-3
  Maintenance precautions 8-5
  Outside the vehicle 8-3
  Seat belt maintenance 1-24
  Under the hood and vehicle 8-4
Malfunction indicator lamp (MIL) 2-10
Manual windows 2-25
Meters and gauges 2-2
Mirror
  Inside mirror 3-16
  Outside mirror control 3-16
  Vanity mirror 3-15
Multi-remote control system (See remote keyless entry system) 3-5

N

Nissan vehicle immobilizer system (NVIS) 2-11, 3-2, 5-6

O

Octane rating (See fuel octane rating) 9-3
Odometer 2-3
Oil
- Capacities and recommended fuel/lubricants 9-2
- Changing engine oil 8-13
- Changing engine oil filter 8-14
- Checking engine oil level 8-12
- Engine oil 8-12
- Engine oil and oil filter recommendation 9-5
- Engine oil viscosity 9-5

Opener lever for trunk lid 3-10
Outside mirror control 3-16
Overdrive switch 5-11
Overheat
- If your vehicle overheats 6-10

Owner's manual order form 9-22
Owner's manual/service manual order information 9-22

P

Parking
- Parking brake check 8-29
- Parking brake operation 5-13
- Parking/parking on hills 5-17

Power
- Power door locks 3-4
- Power outlet 2-19
- Power steering fluid 8-17
- Power steering system 5-18
- Power windows 2-24
- Rear power windows 2-25

Precautions
- Maintenance precautions 8-5
- Precautions on seat belt usage 1-18
- Precautions when starting and driving ... 5-2

Push starting 6-10

R

Radio
- Car phone or CB radio 4-20
- Compact Disc (CD) changer 4-17
- FM-AM radio with compact disc (CD) player 4-12

Readiness for inspection maintenance (I/M) test 9-21
Rear power windows 2-25
Rear window defogger switch 2-16
Refrigerant recommendation 9-7
Registering your vehicle in another country 9-10
Remote keyless entry system 3-5
Reporting safety defects (USA) 9-20

S

Safety
- Child safety rear door lock 3-4
- Reporting safety defects (USA) 9-20

Seat adjustment
- Front manual seat adjustment 1-2
- Rear seat adjustment 1-4

Seat belt
- Precautions on seat belt usage 1-18
- Seat belt extenders 1-24
- Seat belt maintenance 1-24
- Seat belts 1-18
- Shoulder belt height adjustment 1-23
- Three-point type with retractor 1-21

Seat belt warning light 2-9
Seats
- Front seats 1-2

Self-adjusting brakes 8-30

Service manual order form 9-22
Servicing air conditioner 4-9
Shift lock release 5-10
Shifting
  Automatic transmission 5-8
  Manual transmission..... 5-12
Shoulder belt height adjustment..... 1-23
Spark plug replacement..... 8-23
Speedometer 2-3
Spotlights (See map light) 2-27
SRS warning label 1-16
Starting
  Before starting the engine 5-6
  Jump starting 6-8
  Precautions when starting and driving ... 5-2
  Push starting..... 6-10
  Starting the engine 5-7
Steering
  Power steering fluid..... 8-17
  Power steering system 5-18
  Tilting steering wheel..... 3-15
Stop light..... 8-40
Storage 2-21
Sunglasses case..... 2-21
Sunroof 2-26
Supplemental restraint system
(Supplemental air bag system)..... 1-6
Switch
  Automatic power window switch 2-25
  Front fog light switch 2-18
  Hazard warning flasher switch 2-18
  Headlight and turn signal switch 2-16
  Ignition switch 5-4
  Overdrive switch 5-11
  Rear window defogger switch 2-16
  Turn signal switch..... 2-17
  Windshield wiper and washer switch ... 2-15

T

Tachometer..... 2-4
Three-way catalyst..... 5-2
Tilting steering wheel..... 3-15
Tire
  Flat tire..... 6-2
  Spare tire..... 6-3, 8-47
  Tire chains 8-45
  Tire placard..... 9-12
  Tire pressure 8-43
  Tire rotation 8-45
  Types of tires..... 8-44
  Uniform tire quality grading 9-19
  Wheels and tires..... 8-43
  Wheel/tire size 9-9
Towing
  Tow truck towing 6-11
  Towing load/specification chart 9-16
  Trailer towing 9-15
Transmission
  Automatic transmission fluid (ATF) 8-15
  Driving with automatic transmission..... 5-7
  Driving with manual transmission..... 5-11
  Selector lever lock release 5-10
Travel (See registering your vehicle in
another country)..... 9-10
Trip odometer 2-4
Trunk access through the rear seat 1-4
Trunk lid lock opener lever 3-10
Trunk light..... 2-28
Turn signal switch..... 2-17

U

Uniform tire quality grading 9-19

V

Vanity mirror 3-15
Vehicle dimensions and weights 9-9
Vehicle identification number (VIN)
(chassis number) 9-10
Vehicle identification number (VIN) plate .. 9-10
Vehicle loading information 9-14
Vehicle recovery 6-13
Vehicle security system 2-11
Ventilators 4-2

W

Warning
  Air bag warning light 1-16, 2-9
  Hazard warning flasher switch 2-18
  Vehicle security system..... 2-11
  Warning labels (for SRS) 1-16

Warning/indicator lights and audible reminders 2-7
Weights (See dimensions and weights) 9-9
Wheels and tires 8-43
Wheel/tire size 9-9
When traveling or registering your vehicle in another country 9-10
Window washer fluid 8-19
Windows
Locking passengers' windows 2-24
Manual windows 2-25
Power windows 2-24
Rear power windows 2-25
Windshield wiper and washer switch 2-15
Wiper
Windshield wiper and washer switch ... 2-15
Wiper blades 8-28

GAS STATION INFORMATION

Recommended fuel:

For 1.8L/2.5L engines

Use unleaded regular gasoline with an octane rating of at least 87 AKI (Anti-Knock Index) number (Research octane number 91).

For SE-R SPEC V

Use unleaded regular gasoline with an octane rating of at least 87 AKI (Anti-Knock Index) number (Research octane number 91).

For improved vehicle performance, NISSAN recommends the use of unleaded premium gasoline with an octane rating of at least 91 AKI number (Research octane number 96).

Recommended engine oil:

- API Certification Mark
- API grade SG/SH, Energy Conserving I & II or API grade SJ, Energy Conserving
- ILSAC grade GF-I & GF-II

See ‘‘Engine oil and oil filter recommendation’’ in the ‘‘Technical and consumer information’’ section.

Tire cold pressure:

See tire placard affixed to the driver’s side rear door pillar.

Recommended new vehicle break-in procedure:

During the first 1,000 miles (1,600 km) of vehicle use, follow the recommendations outlined in the “BREAK-IN SCHEDULE Information found in the “Starting and driving” section of this Owner’s Manual. Follow these recommendations for the future reliability and economy of your new vehicle.
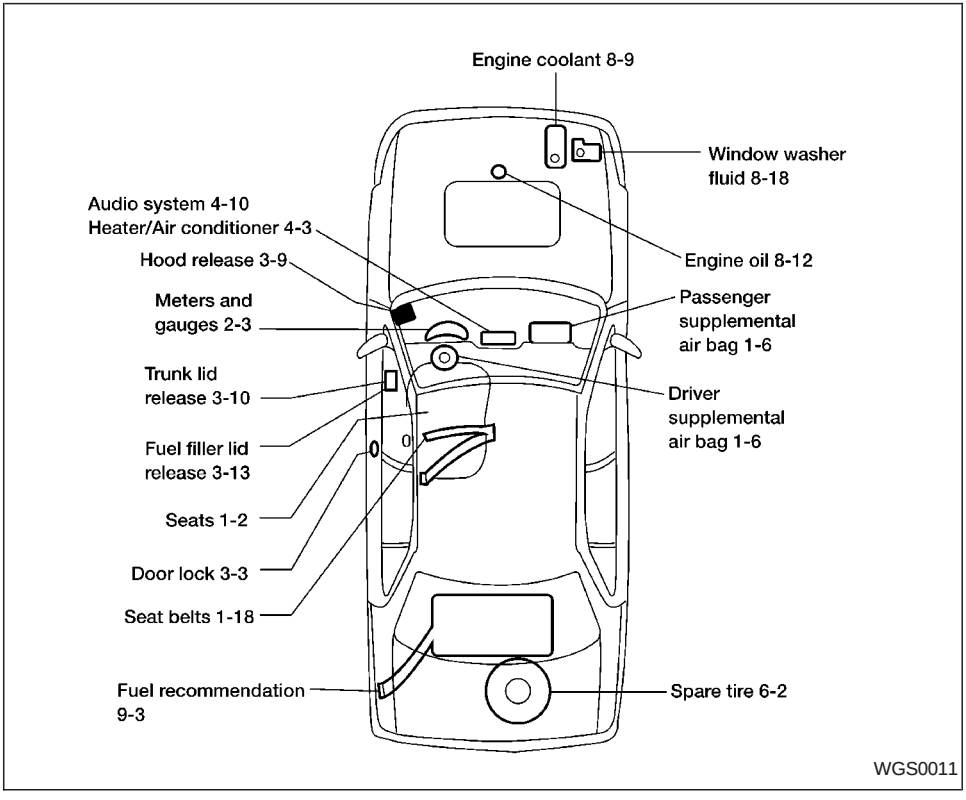
QUICK REFERENCE