CLIO

vehicle user manual

Castrol, exclusive Renault partner
ARKANA
Benefit from cutting-edge technology born out of competition to ensure the performance and longevity of your Renault thanks to wide range of engine lubricants developed specially by Renault and Castrol.
Renault recommends Castrol
renault.fr

Welcome to your new vehicle

This driver's handbook contains the information necessary:
- for you to familiarise yourself with your vehicle, to use it to its best advantage and to benefit fully from the all the functions and the technical developments it incorporates.
- to ensure that it always gives the best performance by following the simple, but comprehensive advice concerning regular maintenance.
- to enable you to deal quickly with minor faults not requiring specialist attention.

It is well worth taking a few minutes to read this handbook to familiarise yourself with the information and guidelines it contains about the vehicle and its functions and new features. If certain points are still unclear, our Network technicians will be only too pleased to provide you with any additional information.

To help you, you will find the following symbols:

and These appear in the vehicle and indicate that you should consult the manual for detailed information and/or limits on operations with respect to your vehicle's equipment.

➥ anywhere in the manual indicates a transfer to a page.

anywhere in the manual indicates a hazard, danger or a safety recommendation.

The descriptions of the models given in this handbook are based on the technical specifications at the time of writing. **This handbook covers all items of equipment** (both standard and optional) **available for these models but whether or not these are fitted to the vehicle depends on the version, options selected and the country where the vehicle is sold.**
This handbook may also contain information about items of equipment to be introduced later in the model year.
The diagrams in the user manual are provided as examples.

Enjoy driving your new vehicle.

Translated from French. Copying or translation, in part or in full, is forbidden unless prior written permission has been obtained from the car manufacturer.

EXTERIOR

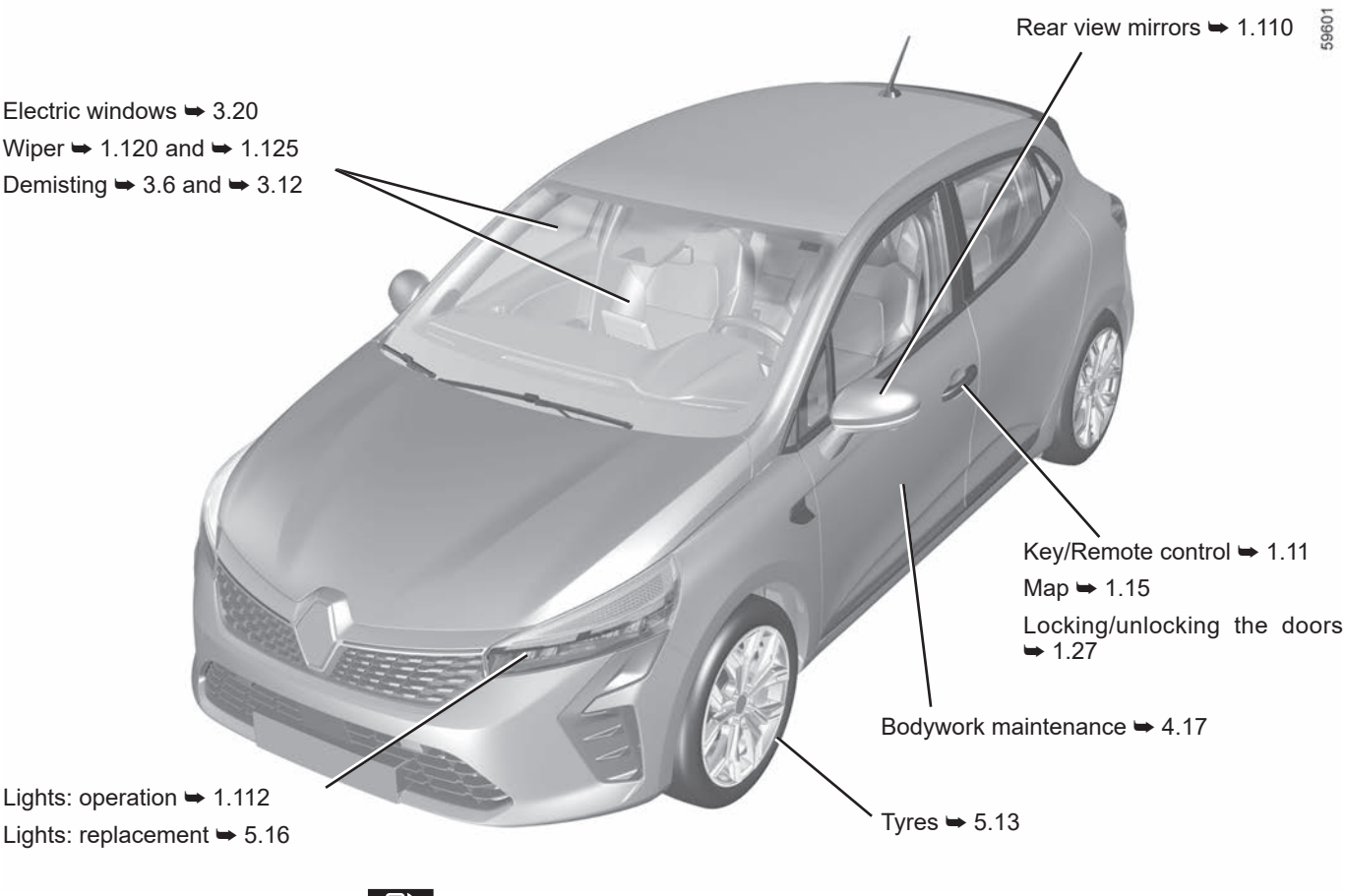

Filling with fuel ➥ 1.127

PASSENGER COMPARTMENT

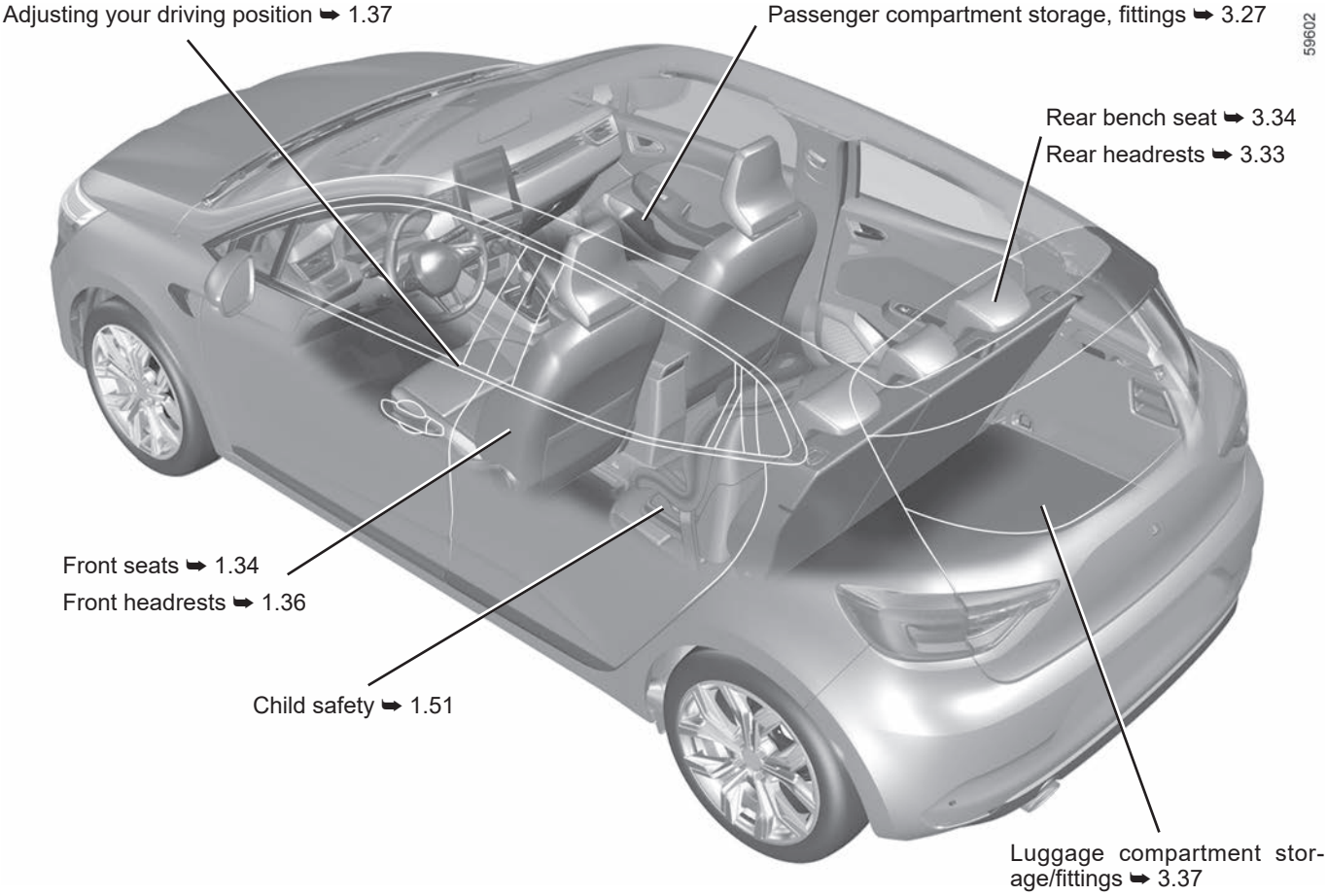

DRIVER'S POSITION

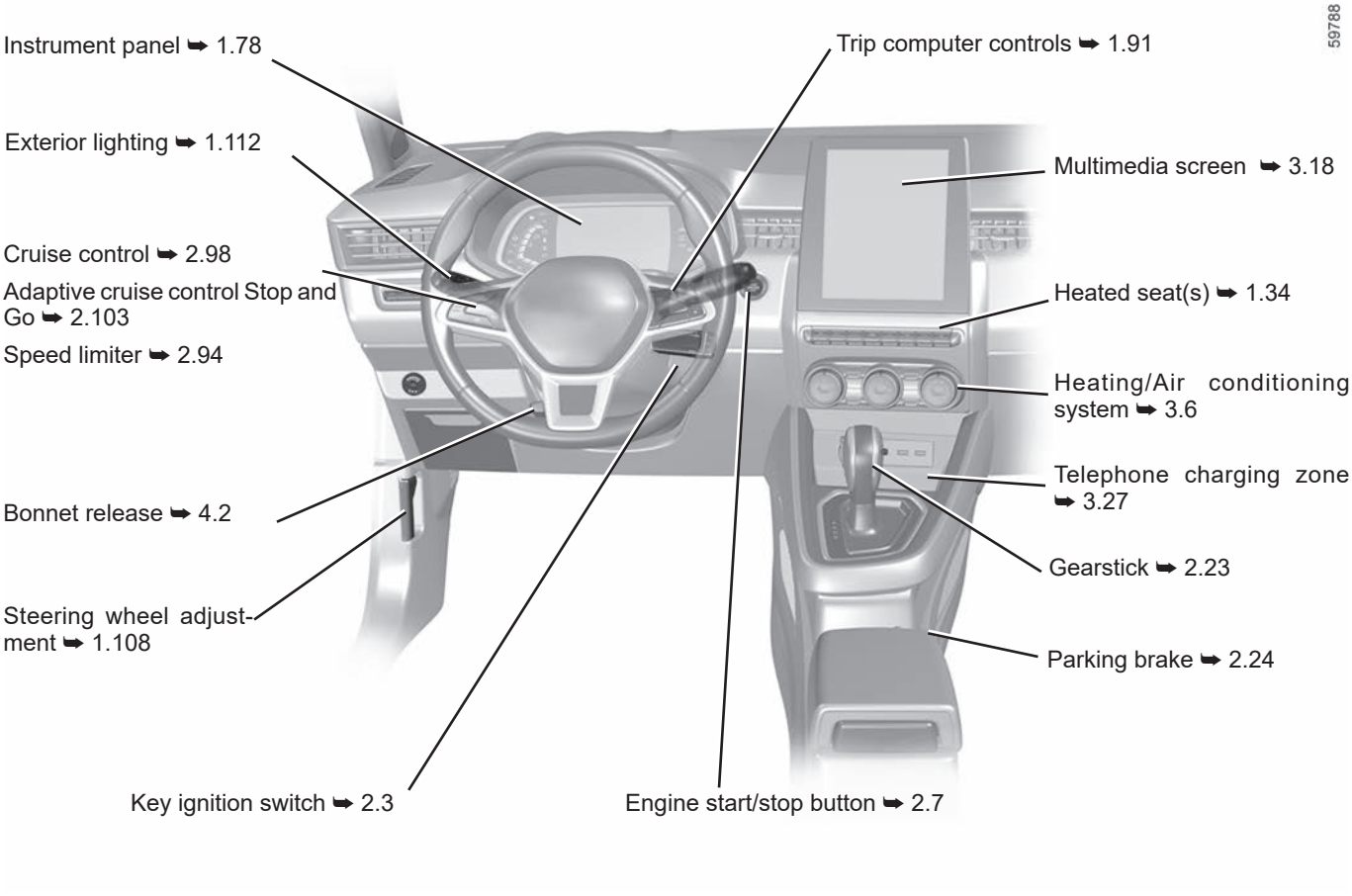

DRIVING AIDS

59789

ABS (anti-lock braking system)

ESC (electronic stability control)

Braking assistance

Hill start assistance ➥ 2.46

Lane departure warning ➥ 000

Lane Keeping Assist ➥ 2.56

Active emergency braking ➥ 2.82

Blind spot warning ➥ 2.62

Safe distance alert ➥ 2.69

Stop and Start ➥ 2.11

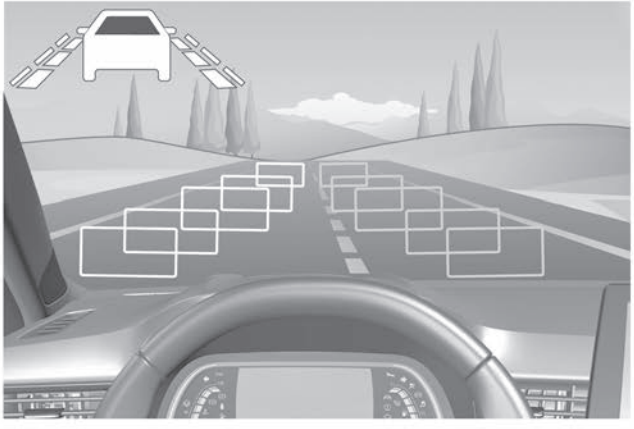

Speed limiter ➥ 2.94

Detection of road signs ➥ 2.90

Cruise control ➥ 2.98

Adaptive cruise control Stop and Go ➥ 2.103

Parking distance control ➥ 2.133

Reversing camera ➥ 2.140

360° camera ➥ 2.73

Assisted parking ➥ 2.143

Tyre pressure loss warning ➥ 2.40

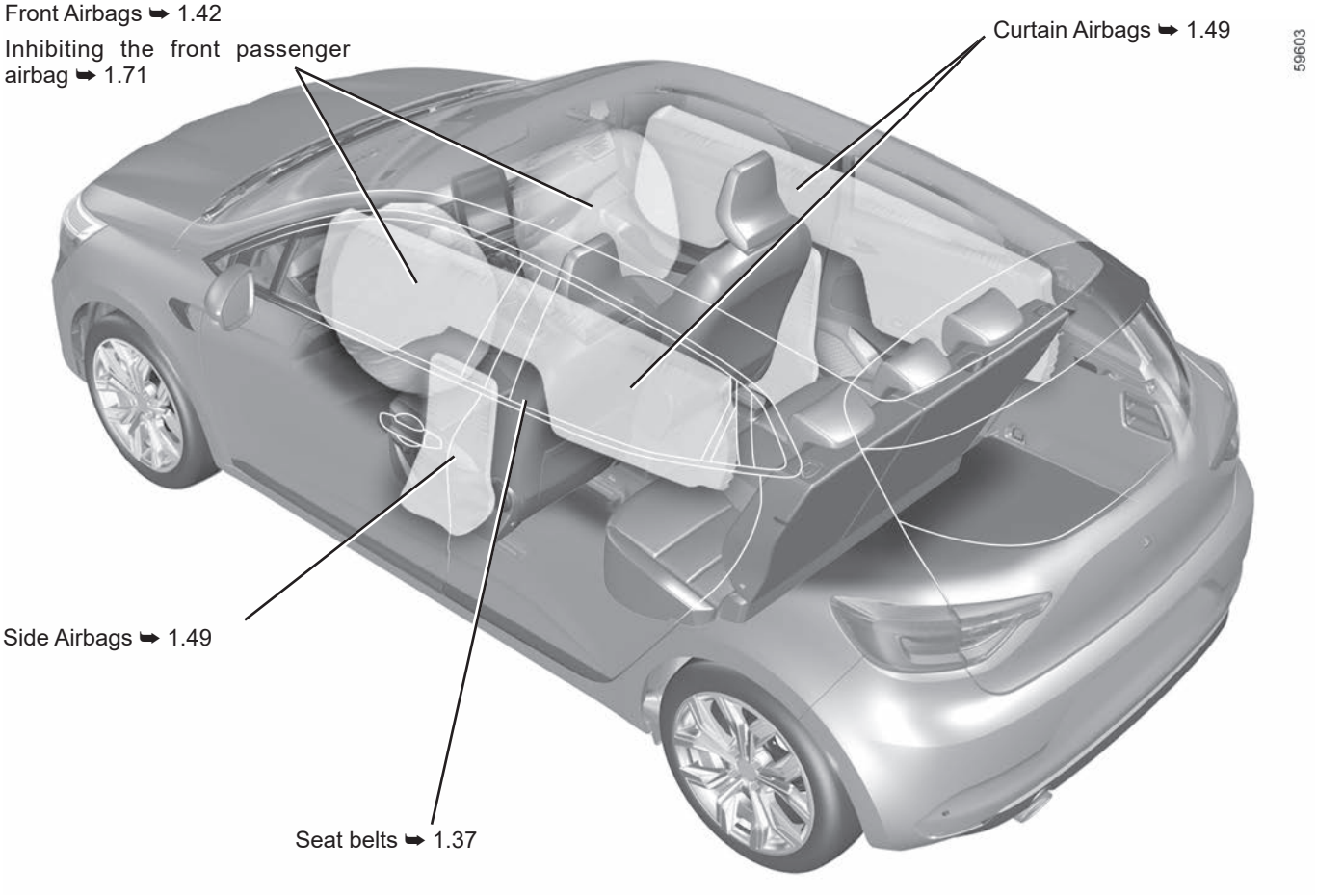
Front Airbags ➥ 1.42
Inhibiting the front passenger airbag ➥ 1.71
Curtain Airbags ➥ 1.49
59603
Side Airbags ➥ 1.49
Seat belts ➥ 1.37

IDENTIFYING A VEHICLE - LABELS

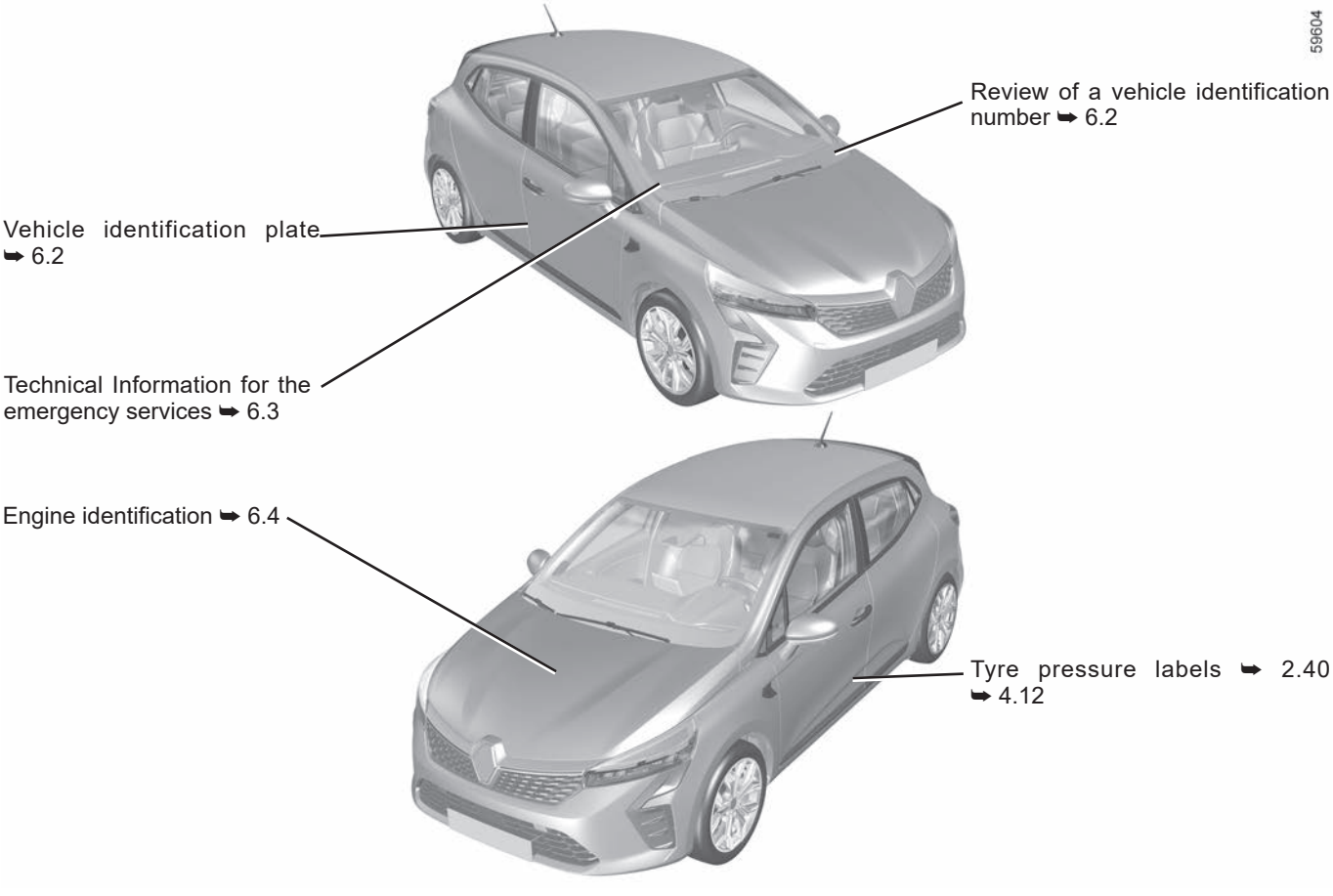

THE ENGINE COMPARTMENT (routine maintenance)

59605

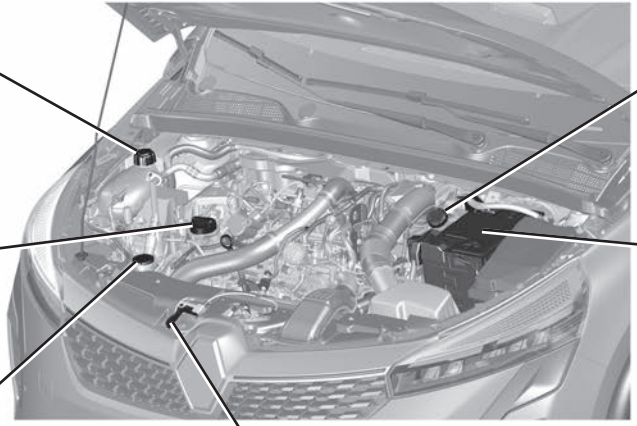

Coolant level ➥ 4.8

Engine oil filler cap ➥ 4.5

Engine oil dipstick ➥ 4.4

Windscreen washer fluid ➥ 4.8

Brake fluid ➥ 4.8

Battery ➥ 4.14

Opening the bonnet ➥ 4.2

BREAKDOWN RECOVERY

59606

Replacing windscreen wiper blade(s) ➥ 5.38

Replacing headlight bulbs ➥ 5.16

Front towing point ➥ 5.40

Replacing the rear screen wiper blade ➥ 5.38

Replacing rear light bulbs ➥ 5.17

Rear towing point ➥ 5.40

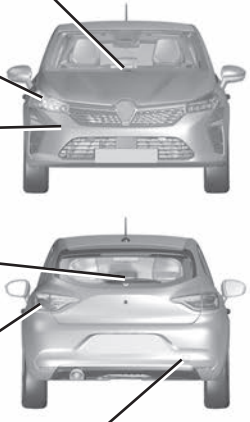

Puncture:

Tools ➥ 5.9

Emergency spare wheel ➥ 5.2

Changing a wheel ➥ 5.11

Fuses ➥ 5.34

THE LPG VEHICLE

Starting/stopping the engine: vehicle with key ➥ 2.4

Starting, stopping the engine: vehicle with card ➥ 2.7

Trip computer ➥ 2.19

GPL Command ➥ 2.19

GPL LPG filling ➥ 1.127

E-TECH HYBRID VEHICLE

E-Tech hybrid vehicle system: introduction ➥ 1.2

E-Tech hybrid vehicle system: operation ➥ 1.6

E-Tech hybrid vehicle system: important recommendations ➥ 1.10

59913

Assisted parking ➥ 2.143

Warning lights ➥ 1.78

Displays and indicators ➥ 1.84

Charge meter ➥ 2.29

Coolant level ➥ 4.8

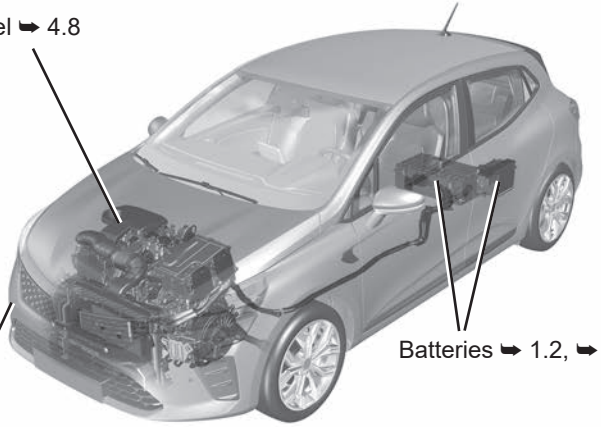

Batteries ➥ 1.2, ➥ 4.14, ➥ 5.27

Towing, breakdown ➥ 5.40

C O N T E N T S

Sections

Getting to know your vehicle 1

Driving 2

Your comfort 3

Maintenance 4

Practical advice 5

Technical specifications 6

Alphabetical index 7

Section 1: Getting to know your Vehicle

E-Tech hybrid vehicle system: introduction, operation, important recommendations 1.2
Key, radio frequency remote control: general information, use, deadlocking 1.11
Card: general information, use, deadlocking 1.15
Digital key 1.23
Locking, unlocking the opening elements 1.27
Opening and closing the doors 1.31
Front seats – Front headrest 1.34
Seat belts 1.37
Additional methods of restraint 1.42
    in addition to the front seat belts 1.42
    to the rear seat belts 1.48
    side 1.49
Child safety: general information 1.51
    choosing a child seat mounting 1.54
    fitting a child seat, general information 1.57
Child seats: attachment by seat belt or by Isofix system 1.59
    deactivating, activating the front passenger airbag 1.71
Driving position 1.74
Warning lights 1.78
Displays and indicators 1.90
    trip computer 1.91
    vehicle settings customisation menu 1.103
Steering wheel, Power-assisted steering 1.108
Rear view mirrors 1.110
Exterior lighting and signals 1.112
Audible and visual signals 1.118
Headlight beam adjustment 1.119
Washers, wipers 1.120
Fuel tank 1.127
Reagent tank 1.132

E-TECH HYBRID VEHICLE SYSTEM: introduction (1/4)

1 Secondary “12 V” battery

2 “230 volt” traction battery

3 Orange electrical power cables

4 Electric motor

5 Combustion engine

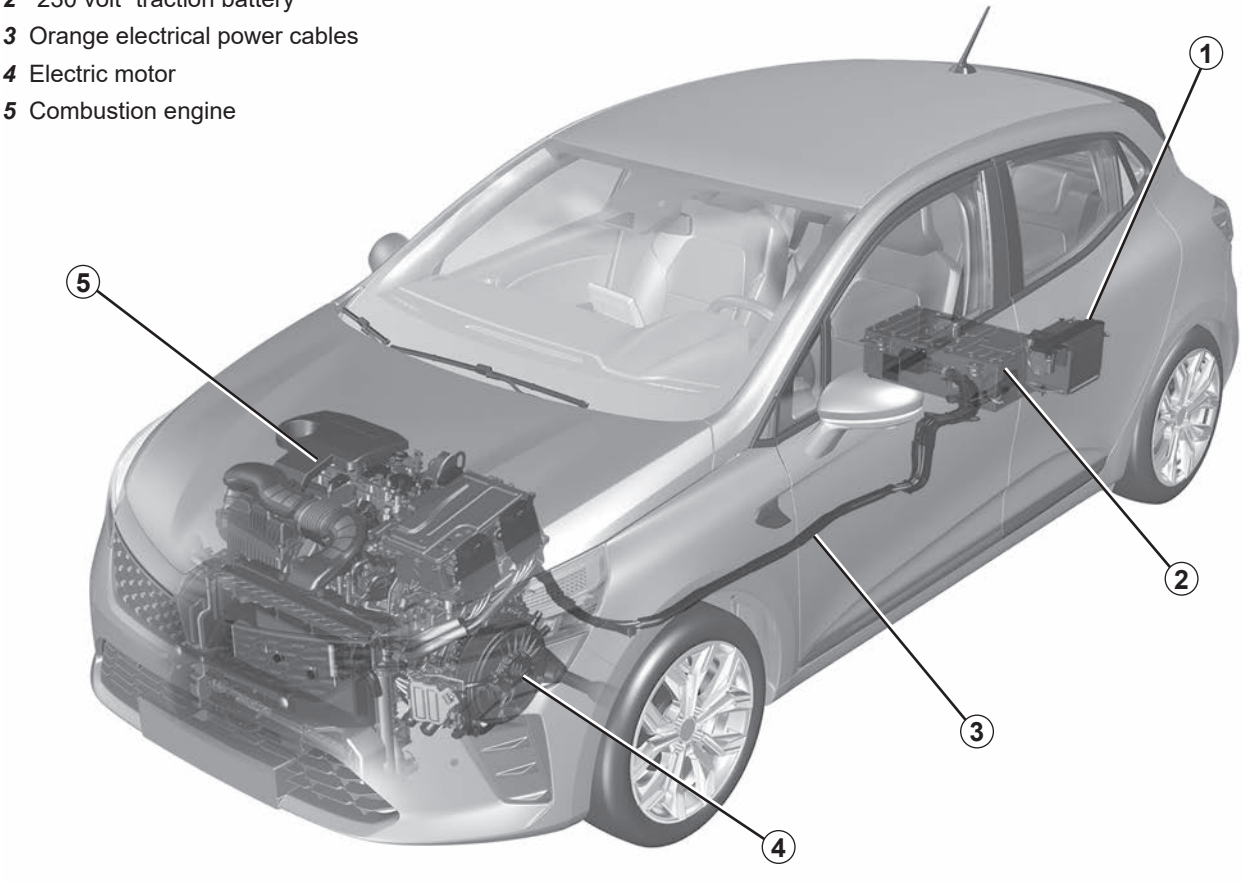

E-TECH HYBRID VEHICLE SYSTEM: introduction (2/4)

The E-Tech hybrid vehicle system uses an electric engine to improve the performance of the combustion engine (acceleration, starting, etc.).

The vehicle has more acceleration torque available while consuming less fuel.

The vehicle may also move in all-electric operating mode without any assistance from the combustion engine.

The vehicle uses energy stored in the “230 V” traction battery.

Batteries

The E-Tech hybrid vehicle is equipped with two types of battery:

– a 230 V traction battery;

– a secondary “12 V” battery.

“230 volt” traction battery

This battery, located underneath the rear floor, stores the energy required for the electric motor to operate correctly.

As with any battery, it discharges when it is used.

The traction battery is charged:

– during the vehicle deceleration phases;

– when the combustion engine starts automatically in order to act as a generator.

Your vehicle range in electric operating mode depends on the charge level of the traction battery, and also on your driving style and the components consuming energy (air conditioning, heating system etc.).

In the event of traction battery discharge, the combustion engine alone moves the vehicle until the traction battery is sufficiently recharged.

Secondary “12 V” battery

The secondary “12 V” battery, located in the luggage compartment, supplies the energy required to open/close the vehicle and to operate the equipment.

Note: the secondary battery “12 Volts” does not participate when the engine is started. This is provided by the E-Tech hybrid system.

The E-Tech hybrid vehicle electrical system uses a direct current of approximately 230 V.

This system can get hot during and after switching off the ignition.

Respect warning messages given on the labels in the vehicle.

All operations on or modifications to the “230 V” electrical system (components, cables, connectors, traction battery) are strictly prohibited due to the risks they present to your safety.

Call an approved Dealer.

The risk of serious burns or electric shocks can lead to death.

Ⓐ

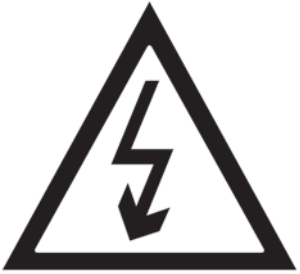

33436

The ***A*** symbol denotes the electrical elements of your vehicle which may present health risks.

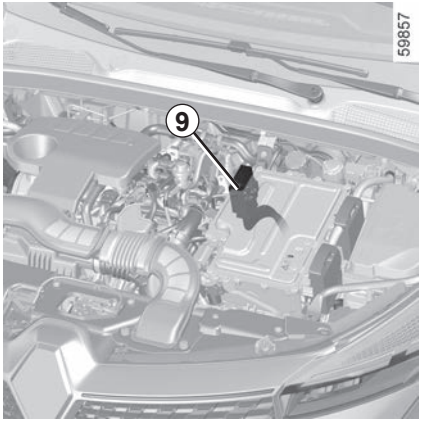

59857

“230 volt” electrical circuit

The 230 V electrical circuit is denoted by orange cables ***9*** and parts bearing the ⚠ symbol.

Noise

E-Tech hybrid vehicles are especially quiet in electric operating mode.

You will not yet necessarily be used to it, and neither will other road users.

It is difficult for them to hear your vehicle when it is moving.

As the electric motor is silent, you will hear other noises that may seem unusual (aerodynamic noises, tyres, etc.) as well as noises due to the operation of the E-Tech hybrid system (e.g. cooling of the traction battery).

Your E-Tech hybrid vehicle is very quiet. When getting out of the vehicle, always check that the gear selector is in **P** position, apply the parking brake and switch off the ignition.

RISK OF SERIOUS INJURY.

Pedestrian horn

The pedestrian horn enables you to warn others of your presence – especially pedestrians and cyclists.

In electric operating mode, the system is activated automatically.

The sound is triggered when the vehicle speed is between about 1 and 19 mph (1 and 30 km/h).

For further information on the pedestrian horn, refer to the multimedia instructions.

In the event of a fault with the pedestrian horn, the warning light is displayed on the instrument panel, together with the message “Failure Outside sound”.

Consult an approved dealer.

E-TECH HYBRID VEHICLE SYSTEM: operation (1/4)

The E-Tech hybrid system selects the combustion engine and/or the electric engine according to the driving style (smooth, sporty, etc.), the traffic conditions and driving mode selected (see the information on “MULTI-SENSE” in Section 3 of the vehicle user manual).

Bad weather, flooded roads:

Do not drive through floods if the depth of water is above the lower edge of the wheel rims.

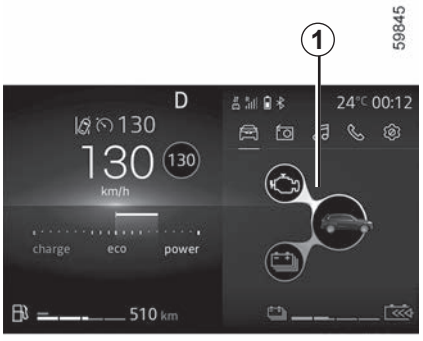

Energy flow indicator *1*

Depending on the driving mode selected, the indicator ***1*** displays the energy flows used:

– the electrical assembly (traction battery and electric motor);

– the combustion engine.

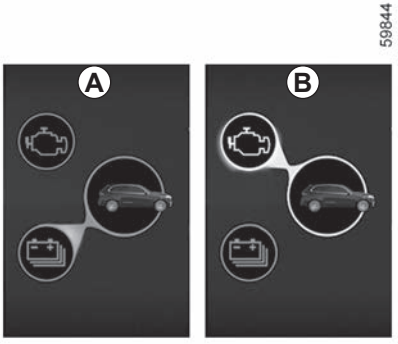

The colour of the flows varies:

– blue: electrical energy;

– white: energy produced by the combustion engine.

Flow *A* “Electric traction”

The electrical assembly is used to power movement of the vehicle.

Flow *B* “Combustion engine traction”

The combustion engine is used to power movement of the vehicle.

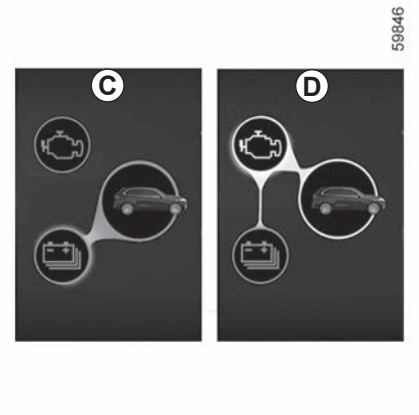

Flow *C* "Energy recovery"

When you lift your foot off the accelerator pedal or press the brake pedal, the electric motor and/or regenerative braking system converts the energy produced through deceleration of the vehicle into electrical energy.

This is used to slow down the vehicle and recharge the traction battery.

Flow *D* "Energy production"

The combustion engine recharges the traction battery.

Note: a combination of different flows is possible (e.g. associating the ***A*** flow with the ***B*** flow means that both the combustion engine and electric motor are powering movement of the vehicle).

Special case

When the traction battery reaches a maximum charge level, the engine brake is temporarily reduced.

Please adapt your driving style appropriately.

The engine brake should under no circumstances be used as a substitute for the brake pedal.

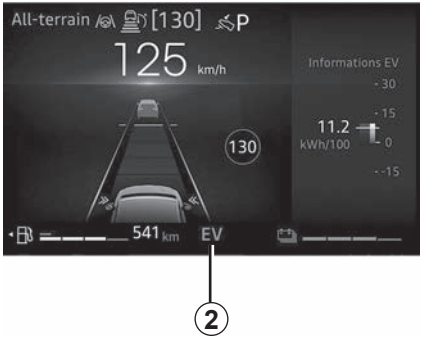

All-electric driving mode

The *2* EV indicator is displayed on the instrument panel to inform you that the E-Tech hybrid system is using only the electrical assembly to power the vehicle movement.

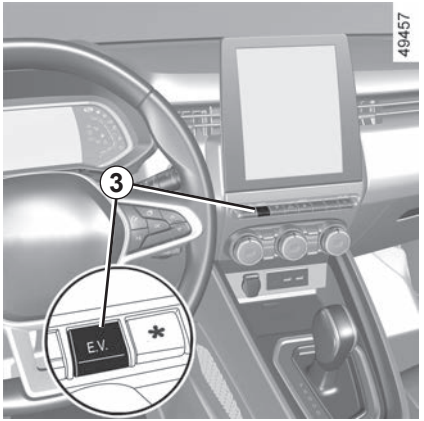

When the E-Tech hybrid system is using the combustion engine and/or the electric engine to power the vehicle movement, it is possible to manually switch to all-electric mode.

This mode can be accessed if:

– the traction battery is sufficiently charged;

– the vehicle speed is below approximately 30 mph (50 km/h).

Press the switch *3*.

The warning light on switch *3* is on and the *2* EV warning light is displayed on the instrument panel.

Otherwise, the message “EV unavailable” is displayed on the instrument panel.

Press again on the *3* switch to deactivate all-electric mode.

The *3* switch warning light goes out.

The *2* EV warning light is no longer displayed on the instrument panel when the vehicle switches to hybrid mode and the combustion engine starts.

Note: when the traction battery level is low, the vehicle automatically switches to hybrid mode and the combustion engine starts: the *2* EV warning light disappears from the instrument panel and the warning light on switch *3* goes out to confirm this.

Air vent *4*

Ensure that no objects or fluids enter the air vent ***4***.

If an object enters the air vent or there is a fluid leakage, please contact an Approved Dealer.

Note: from the rear seats, you may hear ventilation noises while the traction battery cooling system is operating.

Take care not to obstruct the air vent ***4***.

If the vent is obstructed (e.g. due to an object placed over it), the traction battery may overheat and hinder the performance of the electric motor.

Your E-Tech hybrid vehicle is very quiet. When getting out of the vehicle, always check that the gear selector is in **P** position, apply the parking brake and switch off the ignition.

RISK OF SERIOUS INJURY.

E-TECH HYBRID VEHICLE SYSTEM: important recommendations

Please read these instructions carefully. Failure to follow these instructions may lead to a **risk of fire, serious injury or electric shock which may present a risk to life.**

In the event of an accident or impact

In the event of an accident or an impact to the underside of the vehicle (e.g. striking a post, raised kerb or other street furniture) the electric circuit or the traction battery may be damaged.

Have the vehicle checked by an authorised dealer.

Never touch the “230 volt” components or orange cables which are exposed and visible inside or outside the vehicle.

In the event of serious damage to the traction battery, leaks may occur:

– never touch the liquids (fluids, etc.) coming from the traction battery;

– in the event of contact with the body, wash the affected area with plenty of water and consult a doctor as soon as possible.

In the event of fire

In the event of a fire, leave the vehicle immediately and evacuate it, then contact the emergency services, informing them that this is a hybrid vehicle.

Only use extinguishing agents ABC or BC that are permitted for use with electrical fires. Do not use water or other extinguishing agents.

In the event of damage to the electrical circuit, please call an authorised dealer.

All towing operations

Refer to the paragraph entitled “Towing, breakdown recovery” ➥ 5.40.

Washing the vehicle

Never wash the engine compartment and “230 V” traction battery using a high-pressure jet.

This risks damaging the electric circuit.

Risk of electric shock and a risk to life.

KEY, RADIO FREQUENCY REMOTE CONTROL: general information (1/2)

1 Locks all the opening elements.

2 Unlocks all the opening elements.

3 Driver's door and ignition/starter key.

5 Unlocking the luggage compartment only.

Remote control with switchblade key:

4 Locking/unlocking using the switchblade key. To release the insert from its housing, press button ***4***, it comes out automatically. Press button ***4*** and guide the insert back into its housing.

Advice

Avoid leaving the remote control in hot, cold or humid areas.

The key must not be used for any function other than those described in the handbook (removing the cap from a bottle, etc.).

Driver's responsibility when parking or stopping the vehicle

Never leave an animal, child or adult who is not self-sufficient alone on your vehicle, even for a short time.

They may pose a risk to themselves or to others by starting the engine, activating equipment such as the electric windows or locking the doors.

Also, in hot and/or sunny weather, please remember that the temperature inside the passenger compartment increases very quickly.

RISK OF DEATH OR SERIOUS INJURY.

Radio frequency remote control operating range

This varies according to the surroundings: take care not to lock or unlock the doors by inadvertently pressing the buttons on the remote control.

Note: if a door or the boot is open or not properly shut, locking is not carried out. A beep sounds and the hazard warning lights and side repeaters do not flash.

Interference
Interference by factors in the immediate vicinity (external installations or the use of equipment operating on the same frequency as the remote control) may affect the operation of the remote control.

Replacement and additional keys or remote controls.

You must only contact an approved dealer:

– If you need to replace a key it will be necessary to take the vehicle and all of its keys to an approved Dealer in order to initialise the system.

– Depending on the vehicle, you have the option of using up to four remote controls.

Remote control unit failure

Make sure that the correct battery type is being used, and that the battery is in good condition and inserted correctly. These batteries have a service life of approximately two years.

How to change the battery ➥ 5.23.

RADIO FREQUENCY REMOTE CONTROL: use

The remote control ***A*** can be used to lock or unlock the doors and boot.

It is powered by a battery which can be replaced. ➥ 5.23.

Locking the doors

Press locking button ***1***.
The side indicator lights and hazard warning lights flash **twice** to indicate that the doors have been **locked**.

Pressing the ***1*** button twice locks the vehicle and enables the closure of the front and rear windows (depending on the vehicle).

Note: if a door or the boot is open or not properly shut, locking is not carried out. A beep sounds and the hazard warning lights and side repeaters do not flash.

Depending on the vehicle, the door mirrors fold in/out automatically when the vehicle is locked/unlocked ➥ 1.110.

Unlocking the doors

Pressing button ***2*** unlocks the doors and tailgate.
Unlocking is indicated by **one flash** of the hazard warning lights and the indicator lights.

Note: with the ignition on and the engine running ➥ 2.3, buttons on the remote control are not activated.

Unlocking the boot only

Press and hold button ***3***. The luggage compartment opens very slightly.

Driver's responsibility when parking or stopping the vehicle
Never leave an animal, child or adult who is not self-sufficient alone on your vehicle, even for a short time.
They may pose a risk to themselves or to others by starting the engine, activating equipment such as the electric windows or locking the doors.
Also, in hot and/or sunny weather, please remember that the temperature inside the passenger compartment increases very quickly.

RISK OF DEATH OR SERIOUS INJURY.

To activate deadlocking

Press button ***1*** twice in quick succession.

Locking is confirmed by **two slow flashes** and **three quick flashes** of the hazard warning lights and side indicator lights.

Depending on the vehicle, the door mirrors fold in automatically when the vehicle is locked ➥ 1.110.

To deactivate deadlocking

Press the ***2*** button.

The hazard warning lights **flash once** to indicate that the doors have been unlocked.

Never use deadlocking if someone is still inside the vehicle.

CARD: general information (1/3)

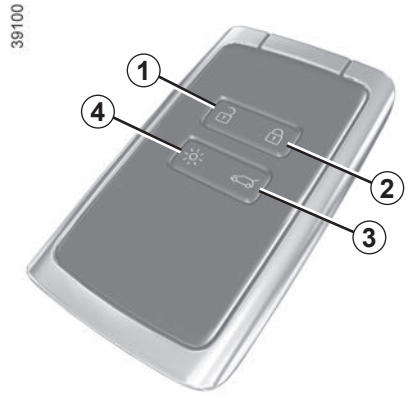

1 Unlocking the doors and tailgate.

2 Locking all doors and tailgate.

3 Unlocking the luggage compartment only.

4 Switching on the lighting remotely.

The card is used for:

– locking/unlocking the doors and tailgate (doors, tailgate) and the fuel filler flap (see the following pages);

– switching on the vehicle lighting remotely (refer to the following pages);

– automatic remote closing of the electric windows ➥ 3.20;

– starting the engine ➥ 2.7.

Battery life

Make sure that the correct battery type is being used, and that the battery is in good condition and inserted correctly. Its service life is approximately two years: it should be replaced when the message “Keycard Battery Low” appears on the instrument panel ➥ 5.25.

card operating range

This varies according to the environment: take care not to accidentally lock or unlock the vehicle by inadvertently pressing the buttons on the card.

Note: if a door or the boot is open or not properly shut, locking is not carried out. A beep sounds and the hazard warning lights and side repeaters do not flash.

Interference

Interference by factors in the immediate vicinity (external installations or the use of equipment operating on the same frequency as the card) may disrupt its operation.

Depending on the vehicle, you may have a digital key that offers all the functions of the card.

However, if a card has been left inside the vehicle and the doors have been locked with a digital key, all of the card’s functions will be inhibited.

For more information ➥ 1.23.

When the battery is flat, you can still lock/unlock and start your vehicle. ➥ 1.27 ➥ 2.7.

Distance lighting function

Pressing button ***4*** switches on the dipped beam headlights and the exterior lighting for approximately 20 seconds. This can be used, for example, to identify the vehicle from a distance when parked in a car park.

Pressing and holding the ***4*** button for approximately two seconds activates the exterior lighting and a sound is emitted.

Note: pressing button ***4*** again switches off the lighting.

Advice

Avoid leaving the card in hot, cold or humid areas.

Do not keep the card in a place where it could be bent or damaged accidentally, such as in a back pocket of a garment.

Replacement: need for an additional card

If you lose your card or require another, you can obtain one from an authorised dealer.

If a card is replaced, it will be necessary to take the vehicle **and all its cards** to an approved Dealer to initialise the system.

You may use up to four cards per vehicle.

Driver's responsibility when parking or stopping the vehicle

Never leave an animal, child or adult who is not self-sufficient alone in your vehicle, even for a short time.

They may pose a risk to themselves or to others by starting the engine, activating equipment such as the electric windows or locking the doors, for example.

Also, in hot and/or sunny weather, please remember that the temperature inside the passenger compartment increases very quickly.

RISK OF DEATH OR SERIOUS INJURY.

Fitting a strap *7*

Slide the rear casing ***5*** downwards while pressing on zone ***A***.

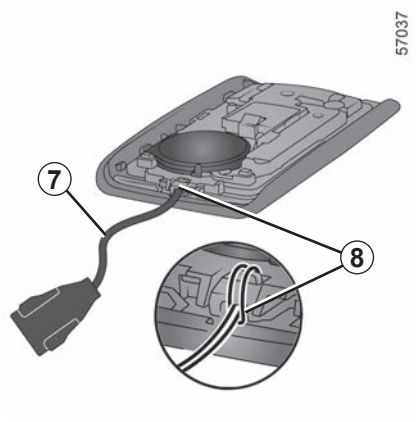

Insert the strap into the ***8*** component and pass the end of the strap through the buckle.

Position the strap at the ***6*** opening and close the cartridge.

Note: check that the diameter of the ***7*** strap cord fits the ***6*** opening.

Depending on the vehicle, there are two or three ways to unlock/lock the vehicle:

– “hands-free”, when approaching and moving away from the vehicle;

– using the card in remote control mode.

Deactivating/activating the “hands-free” mode

Depending on the vehicle, you can activate or deactivate unlocking when approaching the vehicle and locking when moving away.

You can also disable/activate the sound signal that is emitted upon locking when moving away from the vehicle ➥ 1.103.

Do not store the card anywhere it may come into contact with other electronic equipment (computer, phone etc.) as this could hinder its operation.

Never leave your vehicle with the card inside.

Driver’s responsibility when parking or stopping the vehicle

Never leave an animal, child or adult who is not self-sufficient alone in your vehicle, even for a short time.

They may pose a risk to themselves or to others by starting the engine, activating equipment such as the electric windows or locking the doors, for example.

Also, in hot and/or sunny weather, please remember that the temperature inside the passenger compartment increases very quickly.

RISK OF DEATH OR SERIOUS INJURY.

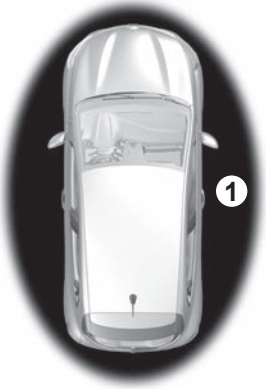

Hands-free unlocking, when approaching the vehicle

With the card in access zone ***1***, the vehicle will unlock. Unlocking is indicated by **one flash** of the hazard warning lights and the indicator lights.

Depending on the vehicle, the door mirrors fold in/out automatically when the vehicle is locked/unlocked ➥ 1.110.

Hands-free locking when moving away from the vehicle

With the card on you, doors and luggage compartment door closed, move away from the vehicle: it will lock automatically once you have left the access zone ***1***.

Note: the distance at which the vehicle locks depends on the surroundings.

To indicate that the vehicle has been locked, the hazard warning lights **flash twice** and then **light up** for approximately four seconds, and a beep sounds in confirmation.

If the card has been within the detection area ***1*** for approximately 15 minutes, remote locking is disabled. To lock the vehicle, press the ***3*** button.

The vehicle cannot be remotely locked if the card is within the area ***2***.

Special features of the unlocking system

Under certain circumstances, approach unlocking is deactivated:

– after eight days of no use of the vehicle;

– if the card remains close to the ***1*** area of the vehicle for approximately five minutes **after the vehicle has been locked**;

– after several passes in the vicinity of the ***1*** area of the vehicle and **without the door being unlocked**.

Use the card as a remote control to unlock the vehicle and reactivate the mode.

Special features relating to “hands-free” locking

After locking in “hands-free” mode, you have to wait approximately three seconds to be able to unlock the vehicle again. During these three seconds, the door handles can be tried to make sure that the vehicle is locked properly.

Note: if a door or the boot is open or not properly shut, locking is not carried out. A beep sounds and the hazard warning lights and side repeaters do not flash.

Using the card as a remote control

Unlocking with the card

Press button ***5***.
Unlocking is indicated by **one flash** of the hazard warning lights and the indicator lights.

The card buttons are deactivated when the engine is running.

Locking using the card

With the doors and boot closed, press button ***3***: the vehicle locks.

To indicate that the vehicle has been locked, the hazard warning lights **flash twice** and then **light up** for approximately four seconds.

Pressing the ***3*** button twice locks the vehicle and enables the closure of the front and rear windows (depending on the vehicle).

Note:

– the maximum distance at which the vehicle locks depends on the surroundings;

– if a door or the boot is open or not properly shut, locking is not carried out. A beep sounds and the hazard warning lights and side repeaters do not flash.

If, **while the engine is running,** a door is opened and closed, and the card is no longer in the zone ***2***, the message “Keycard Not Detected” indicates that the card is not inside the vehicle. This will, for example, prevent you from driving away after dropping off a passenger who has kept the card on them.

The warning disappears when the card is detected again.

Unlocking the boot only

Press and hold button ***4***. The boot opens slightly.

If the vehicle is equipped with a deadlocking function, this allows you to lock the opening elements and to prevent the doors from being unlocked using the interior handles (for example, by breaking the window and then trying to open the door from the inside).

Never use deadlocking if someone is still inside the vehicle.

To activate deadlocking

Press button ***2*** twice in quick succession.

Locking is confirmed by **two slow flashes** and **three quick flashes** of the hazard warning lights and side indicator lights.

Depending on the vehicle, the door mirrors fold in automatically when the vehicle is locked ➥ 1.110.

To deactivate deadlocking

Press the ***1*** button.

The hazard warning lights **flash once** to indicate that the doors have been unlocked.

DIGITAL KEY (1/4)

Depending on the country and subscription, you can install a digital key for your vehicle on your smartphone.

The digital key contains the rights required to lock/unlock and start your vehicle using a smartphone.

Thus, your smartphone replaces your card.

General information

The installation, administration and transmission of the digital keys are carried out using the manufacturer's app.

Once the manufacturer's application is installed on your smartphone and the subscription is activated, the digital key must be activated from the manufacturer's application.

Operating conditions

Activate Bluetooth® on your smartphone then open the manufacturer's application to access the various digital key functions (see following pages).

Note: the smartphone must be sufficiently charged in order to use a digital key. In the event of a low charge level, the "Low smartphone battery" message appears on the instrument panel.

The digital key's operational reach will depend on your smartphone's Bluetooth® connection.

Lending a digital key

From the manufacturer's app, access the "Share Virtual Key" menu and fill in the information for the occasional user. After validation, a confirmation email will be sent to the user.

Note: the manufacturer's application must have been previously downloaded and installed by the occasional user.

Revoking a digital key

The user can individually revoke a digital key. Once a digital key has been revoked, the user can activate a new key.

For more information, please see the manufacturer's application.

Activation/deactivation from the multimedia screen

It is possible to deactivate and reactivate the “Digital key” function so that the vehicle does not communicate with any digital key.

Refer to the multimedia instructions.

Locking/unlocking the doors and luggage compartment, deadlocking, remote lighting

The first time the vehicle is unlocked or started using a new digital key or a new smartphone, it will take several seconds for the vehicle to identify the digital key installed on your smartphone.

From your smartphone, with Bluetooth® activated, open the manufacturer’s application and discover the various functions available for your digital key. They are identical to those of your card.

These functions are:

– locking/unlocking all the opening elements: please see “Hands-free card: use” ➥ 1.18;

– locking/unlocking the luggage compartment (depending on the vehicle): please see “Hands-free card: use” ➥ 1.18;

– deadlocking (depending on the vehicle): please see “Hands-free card: deadlocking” ➥ 1.22;

– remote lighting: please see the information on the “Remote lighting function” ➥ 1.15;

– remote sounding of the horn (allows you to identify the vehicle from afar or when parked in a crowded car park, for example);

– starting/stopping the engine: please see “Starting, stopping the engine” ➥ 2.7.

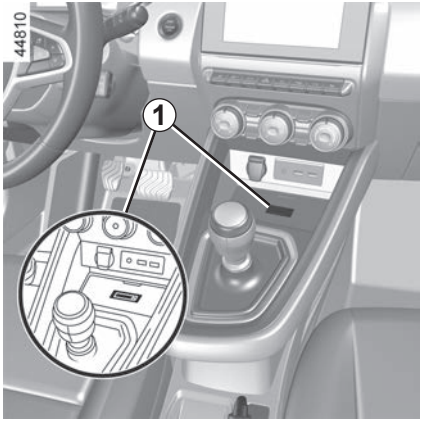

Starting, stopping the engine

Upon first use and each time a new smartphone is used, it is necessary to calibrate your digital key with your vehicle.

To do this, activate Bluetooth® on your smartphone then follow the procedure from the manufacturer's application.

When calibrating, the smartphone must be placed in the ***1*** placement area.

To start/stop the engine, the system checks that the smartphone is present in the ***1*** placement area before allowing the engine to be started.

For more information, please refer to the information on "Starting, stopping the engine" ➥ 2.7.

The smartphone must remain in the vehicle throughout the journey.

It is necessary to place the smartphone in the placement area in order to start and stop the engine and when calibrating.

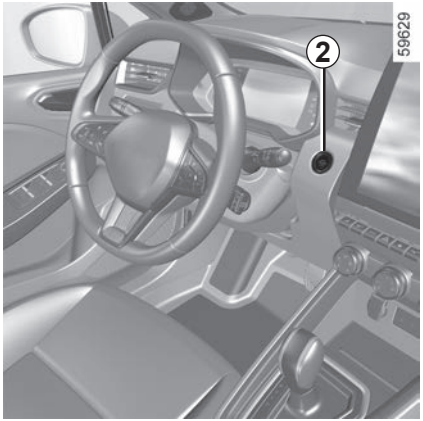

If the smartphone is no longer in the passenger compartment when you try to switch the engine off, a message is displayed on the instrument panel: press and hold the engine start/stop button for more than two seconds ***2***.

If the smartphone is no longer in the passenger compartment, make sure you can retrieve it before pressing and holding. Without a smartphone or card, you will not be able to start the vehicle again.

Special features of the digital key

– For the digital key to remain active, the smartphone concerned must be connected to the Internet (via WI-FI or mobile network) at least once every 48 hours. Otherwise, connect your smartphone to the internet for a few minutes so that the digital key can be reactivated.

– If a card has been left inside the vehicle and the doors have been locked with the digital key, all of the card's functions will be inhibited. The card's functions will remain inactive until the engine is started again.
In this case, to start the engine you will need to use either the digital key or a card other than that left inside the vehicle.

When the engine is started or stopped, the smartphone should always be sufficiently charged in order to use the digital key.

If the remote control or, depending on the vehicle, the card does not work

In some cases, the radio frequency remote control or the card may not work:

– card/radio frequency remote control battery worn or run flat, vehicle battery flat etc.

– use of appliances operating on the same frequency as the card (mobile phone, etc.);

– the vehicle is located in a high electromagnetic radiation zone;

– vehicle locked using a digital key ➥ 1.23.

It is then possible:

– to use the radio frequency remote control or the emergency key integrated into the card (depending on the vehicle) to unlock the driver's door;

– to use the interior door locking/unlocking control (refer to the following pages);

– to use the digital key, depending on the vehicle ➥ 1.23.

The card's built-in key

The ***2*** integrated key can be used to lock or unlock the driver's door when the card is not working.

Access with key 2

Slide the rear casing ***1*** downwards while pressing on zone ***A***.

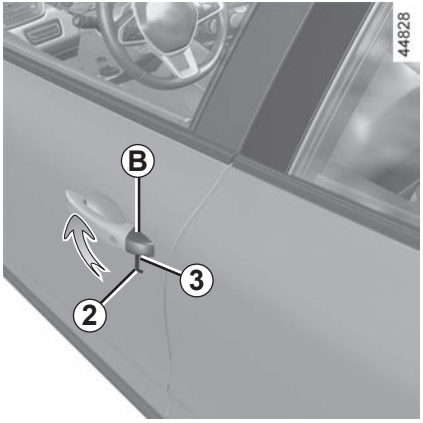

Using the key integrated in the card

– Insert the tip of the key ***2*** into the notch ***3*** at the bottom of the cover ***B*** on the driver's door;

– Move it upwards to remove the cover ***B***;

– insert the key ***2*** into the lock of the driver's door, lock and unlock.

Once you are inside the vehicle, put the key back in its casing in the card.

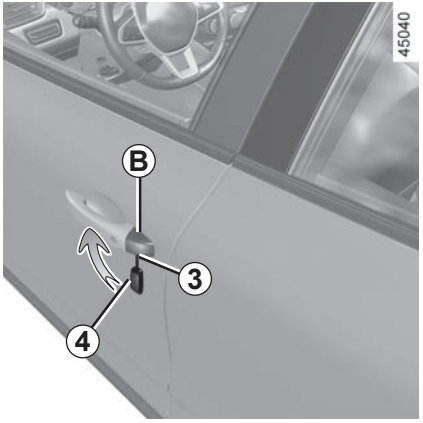

Vehicles with key/remote control

Using the key

– Insert the tip of the key ***4*** into the notch ***3*** at the bottom of the cover ***B*** on the driver's door;

– Move it upwards to remove the cover ***B***;

– insert the key ***4*** into the lock of the driver's door, lock and unlock.

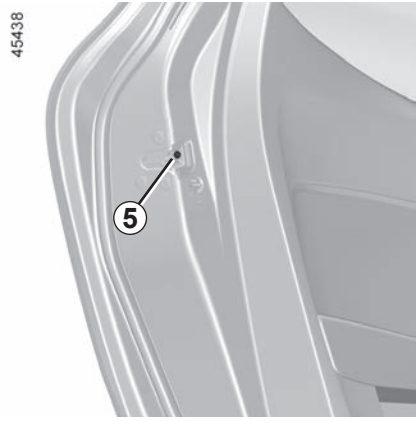

Locking the doors manually

Turn screw ***5*** with the door open (using the end of the key) and close the door.

This means that the doors are then locked from the outside.

The doors may then only be opened from the inside or by using the key in the driver's door.

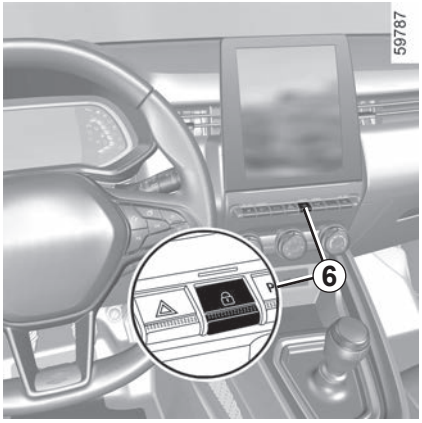

Interior locking/unlocking door control

Switch ***6*** controls the doors, the boot and the fuel filler flap simultaneously.

If a door or the tailgate is open or not closed properly, the doors and tailgate lock/unlock quickly.

If transporting an object with the tailgate open, you can still lock the doors: with the engine stopped, press and hold switch ***6*** to lock the other doors.

Door and tailgate status indicator

When the ignition is on, the ***6*** switch warning light indicates the locking status of the opening elements:

– indicator light on, the doors and tailgate are locked;

– indicator light off, the doors and tailgate are unlocked.

When you lock the doors, the indicator light remains lit and then goes out.

Driver's responsibility

If you decide to keep the doors locked when you are driving, remember that it may be more difficult for those assisting you to gain access to the passenger compartment in the event of an emergency.

Locking the opening elements without the card or the key

For example, in the event of a discharged battery or the card or key temporarily not working etc.

With the engine switched off and a door or tailgate open, press and hold the ***6*** switch for more than five seconds.

When the door is closed, all the doors and the tailgate will be locked.

Note: unlocking the vehicle from the outside is only possible with the card in the vehicle's access zone or using the key.

Never leave your vehicle with the key or card inside.

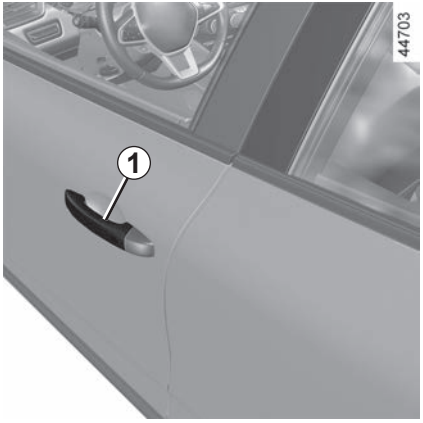

Opening the doors from the outside

Front doors

With the doors unlocked or the card on you, hold the ***1*** handle and pull towards you.

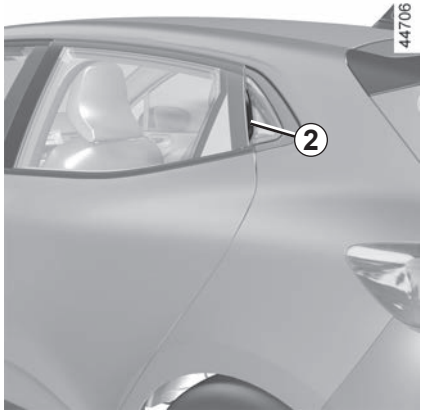

Rear doors

With the doors unlocked, pull handle ***2***.

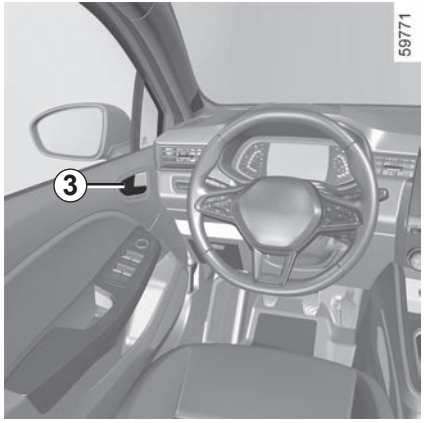

Opening from the inside

Pull handle ***3***.

As a safety precaution, the doors should only be opened or closed when the vehicle is stationary.

Lights-on reminder buzzer

If you have switched off the ignition and left the lights switched on, a reminder buzzer will sound when a door is opened.

Door/tailgate open buzzer

When the vehicle is stationary, the warning light appears on the instrument panel accompanied by a warning light indicating which of the opening elements (door(s), luggage compartment) are open or incorrectly closed.

Once the vehicle reaches a speed of approximately 6 mph (10 km/h), a warning light indicates if the door(s) or luggage compartment are open or not properly closed, along with the message “WARNING: Boot Open” or “WARNING: Door Open” and a beep will sound for around 40 seconds or until the door/luggage compartment is closed.

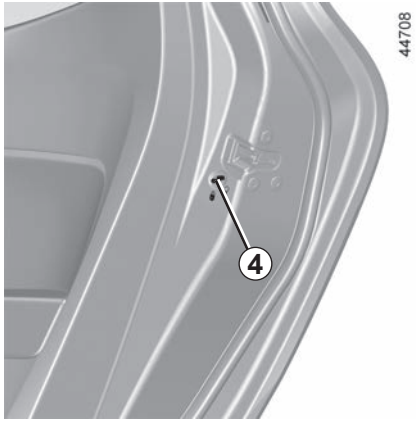

Child safety

Move lever ***4*** and check from the inside that the doors are securely locked, to prevent the rear doors being opened from the inside.

Driver’s responsibility when parking or stopping the vehicle

Never leave an animal, child or adult who is not self-sufficient alone on your vehicle, even for a short time.

They may pose a risk to themselves or to others by starting the engine, activating equipment such as the electric windows or locking the doors.

Also, in hot and/or sunny weather, please remember that the temperature inside the passenger compartment increases very quickly.

RISK OF DEATH OR SERIOUS INJURY.

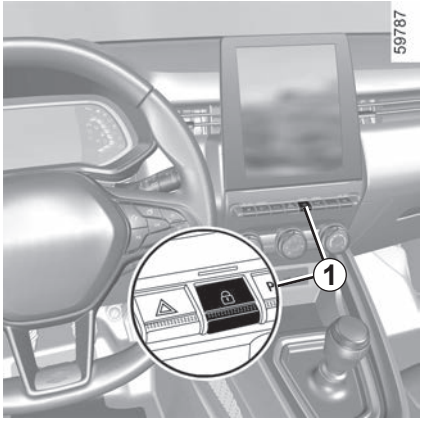

Operating principle

After the vehicle is started, the system automatically locks the doors when you are driving at approximately 6 mph (10 km/h) and over.

The door can be unlocked:

– by pressing the central door unlocking switch ***1***;

– at a standstill, by opening a front door from inside the vehicle.

NB: if a door is opened or closed, it will automatically lock again when the vehicle reaches a speed of 6 mph (10 km/h).

Activating/deactivating the function

To activate: with the vehicle stationary and the engine running, press the switch ***1***.

The ***1*** switch warning light illuminates.

To deactivate: with the vehicle stationary and the engine running, press the switch ***1***.

The ***1*** switch warning light goes out.

The function can also be activated and deactivated via the multimedia screen (depending on the vehicle). ➥ 1.103.

Operating faults

If you experience an operating fault (no automatic locking, the ***1*** switch warning light does not illuminate when the doors and luggage compartment are locked etc.), make sure that automatic locking has not been deactivated by mistake and check that the doors and luggage compartment are properly closed.

If they are properly closed, contact an approved dealer.

Driver's responsibility

If you decide to keep the doors locked when you are driving, remember that it may be more difficult for those assisting you to gain access to the passenger compartment in the event of an emergency.

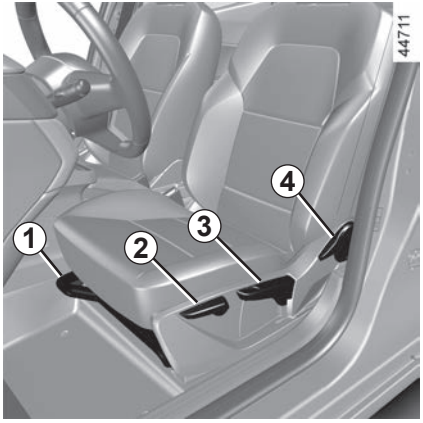

To move the seat forwards or backwards

Lift and hold the handle ***1*** to unlock the seat.

Release the handle once the seat is in the correct position and ensure that the seat is locked.

To raise or lower the seat base

Move the lever ***3*** as many times as necessary upwards or downwards until the required position is reached.

To tilt the seatback

Lift the ***2*** or ***4*** handle and tilt the seatback to the desired position.

Release the handle at the desired position and make sure that it is locked.

After making adjustments, make sure that the seatbacks are correctly locked in place.

For safety reasons, carry out any adjustments when the vehicle is not being driven.

We would advise you not to recline the seatbacks too far to ensure that the effectiveness of the seat belts is not reduced.

Nothing should be placed on the floor (area in front of driver) as such objects may slide under the pedal during braking manoeuvres, thus obstructing its use.

Central armrest *5*

(depending on the vehicle)

To adjust the position of the armrest, slide it forwards or backwards until it reaches the stop.

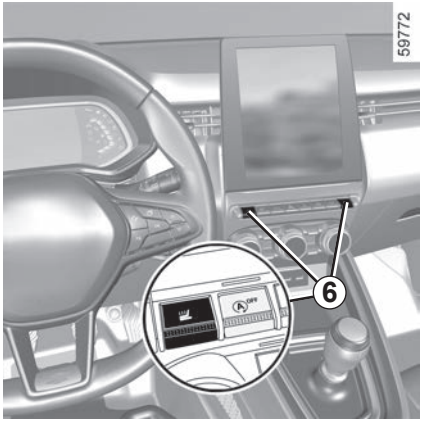

Heated seats

With the ignition on:

– Pressing the switch ***6*** on the required seat for the first time activates the heating system on high. Both integrated switch warning lights come on;

– pressing the switch for the second time changes the heating to low. One integrated warning light comes on;

– pressing for the third time turns the heating off.

Operating faults

When an operating fault is detected, the warning lights of the ***6*** switch for the seat concerned go out after approximately five seconds.

Consult an approved dealer.

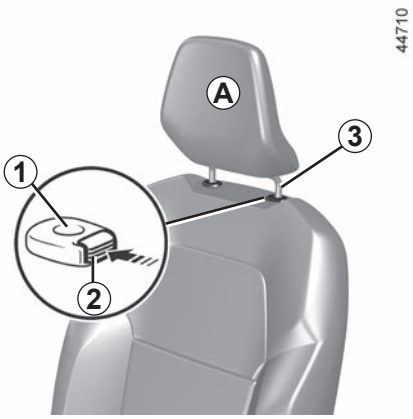

To raise the headrest

Press the ***2*** button and pull the headrest upwards to the height required. Check that the bonnet is correctly locked.

To lower the headrest

Press button ***2*** and guide the headrest down to the desired height. Check that the bonnet is correctly locked.

To raise the headrest

Raise it to its highest position (tilt the seatback backwards if necessary). Press button ***2*** and lift the headrest to release it.

To refit the headrest

Check that the headrest rods are clean ***3***.

Insert the headrest rods into the holes ***1*** (tilt the seatback backwards if necessary). Lower the headrest until it locks and press button ***2*** to adjust to the desired height. Check that each rod ***3*** on the seatback is securely locked.

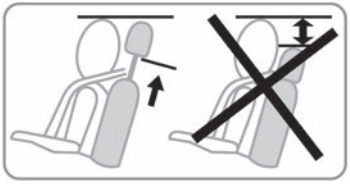

The headrest is important for safety. Ensure that it is in place and in the correct position: the top of the headrest should be as close as possible to the top of the head and there must be a minimal distance between the head and the headrest ***A***.

Always wear your seat belt when travelling in your vehicle. You must also comply with the legislation of the particular country you are in.

Before starting, first adjust your driving position, then ask all occupants to adjust their seat belts to ensure optimum protection.

Adjusting your driving position

- **Sit well back in your seat** (having first removed your coat or jacket). This is essential to ensure your back is positioned correctly;
- **adjust the distance between the seat and the pedals.** Your seat should be as far back as possible while still allowing you to fully depress the pedals. The seatback should be adjusted so that your arms are slightly bent when you hold the steering wheel;
- **adjust the position of your headrest.** For maximum safety, your head must be as close as possible to the headrest;
- **adjust the height of the seat.** This adjustment allows you to select the seat position which offers you the best possible view;
- **adjust the position of the steering wheel.**

Make sure that the rear bench seat is locked in position correctly so that the rear seat belts will operate correctly. ➥ 3.34.

Incorrectly adjusted or twisted seat belts may cause injuries in the event of an accident.

Use one seat belt per person, whether child or adult.

Even pregnant women should wear a seat belt. In this case, ensure that the lap belt is not exerting too much pressure on the abdomen, but do not allow any slack.

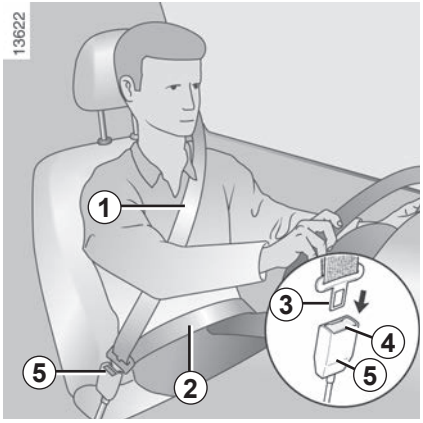

Adjusting the seat belts

For correct adjustment and positioning of the seat belts at all seats:

– adjust the seats (seat position and seatback angle if available);

– sit with your back firmly against the seatback;

– move the shoulder strap ***1*** as close as possible to the base of the neck without it actually resting against it (if necessary, adjust the height of the seat belt if available) and make sure that the chest strap 1 is in contact with the shoulder;

– position the lap belt ***2*** so that it lies flat on the thighs and against the pelvis.

The belt should be worn so that it is as close as possible to your body, i.e.: avoid wearing heavy clothing or keeping bulky objects under the belts, etc.

Locking

Unwind the belt **slowly and smoothly** and ensure that buckle ***3*** locks into catch ***5*** (check that it is locked by pulling on buckle ***3***).

If the belt jams, allow it to return slightly before attempting to unwind it again.

If your seat belt is completely jammed, pull slowly, but firmly, so that just over 3 cm unwinds. Allow it to return slightly before attempting to unwind it again.

If there is still a problem, contact an approved dealer.

Unlocking

Press button ***4*** and the seat belt will be rewound by the inertia reel. Guide the belt.

Driver's seat belt reminder and, depending on the vehicle, front passenger seat belt reminder

This appears on the central display when the ignition is switched on and if the driver's and/or front passenger's seat belt(s) (if the passenger seat is occupied) is not fastened. Depending on the vehicle, if the seat is occupied and one of these seat belts is not fastened or becomes unfastened while the vehicle is moving at a speed over approximately 12 mph (20 km/h), the warning light flashes and a beep sounds for approximately 120 seconds.

Note: an object placed on the passenger seat may activate the warning light in some cases, depending on the vehicle.

Rear seat belt reminder (depending on the vehicle)

The ***6*** graphic is displayed on the instrument panel when the ignition is switched on. This informs the driver of the fastening status of each of the rear seat belts every time:

– the ignition is switched on;
– a door is opened;
– fastening or unfastening of a rear seat belt.

playback of ***6*** **graphic:**

– indicator green: seatbelt fastened;
– indicator in red: the seat is occupied and the seat belt is not fastened;
– indicator grey: seat not occupied.

Depending on the vehicle, the warning light on the central display also appears when the ignition is switched on, if a rear seat is occupied and the seat belt is not fastened. When the vehicle speed is less than approximately 12 mph (20 km/h), the warning light on the central display appears when a rear seat belt is unfastened.

It is accompanied by the ***6*** symbol which appears for approximately 60 seconds each time one of the rear seat belts is fastened or unfastened.

When the vehicle speed reaches or exceeds 12 mph (20 km/h), if one of the rear seat belts is or becomes unfastened during the journey:

– the warning light flashes on the central display;

and

– a beep is emitted for 30 to 120 seconds (depending on the version);

and

– the ***6*** symbol is displayed for at least approximately 60 seconds and the symbol for the seat concerned changes to red.

Always make sure that the rear passengers are properly fastened and that the number of fastened seat belts indicated corresponds to the number of rear seats occupied.

Note: in some cases the alerts may be activated if an object is placed on one of the rear seats, depending on the vehicle.

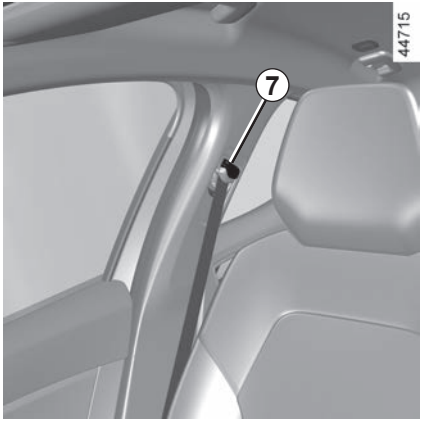

Adjusting the height of the front seat belts

Use button ***7*** to adjust the seat belt height so that the shoulder strap is worn as shown previously. Press the button ***7*** and raise or lower the seat belt. Make sure that the seat belt is locked in position correctly after you have adjusted it.

Rear seat belts *8*

The belts are locked, unlocked and adjusted in the same way as the front belts.

Check that the rear seat belts are positioned and operating correctly each time the rear bench seat is moved.

SEAT BELTS (5/5)

The following information applies to the vehicle's front and rear seat belts.

– No modification may be made to the component parts of the originally fitted restraint system: seat belts, seats and their mountings. For special operations (e.g. fitting child seats), contact an authorised dealer.

– Do not use devices which allow any slack in the belts (e.g. clothes pegs, clips, etc.): a seat belt which is worn too loosely may cause injury in the event of an accident.

– Never wear the shoulder strap under your arm or behind your back.

– Never use the same belt for more than one person and never hold a baby or child on your lap with your seat belt around them.

– The belt should never be twisted.

– Following an accident, have the seat belts checked and replaced if necessary. Always replace your seat belts as soon as they show any signs of wear.

– When the rear bench seat is being put back, make sure that the seat belts and buckles are correctly positioned so that they can be used properly.

– Make sure that the buckle is inserted into the appropriate catch.

– Ensure that no objects are placed in the area around the seat belt catch as they could prevent it from being properly secured.

– Make sure the seat belt catch is properly positioned (it should not be hidden away, crushed or flattened by people or objects).

METHODS OF RESTRAINT IN ADDITION TO THE FRONT SEAT BELTS (1/6)

Depending on the vehicle, they will consist of:

- **seat belt inertia reel pretensioners;**
- **central seat belt pretensioners;**
- **chest-level load limiters;**
- **airbags driver and passenger front.**

These systems are designed to act independently or together when the vehicle is subjected to a frontal impact.

Depending on the severity of the impact, the system can trigger:

- seat belt locking;
- the seat belt inertia reel pretensioner (which engages to correct seat belt slack);
- lap seat belt pretensioners to hold the occupant in their seat;
- the front airbag.

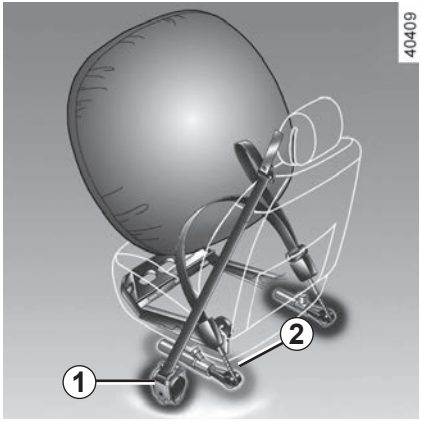

Pretensioners

The pretensioners hold the seat belt against the body, holding the occupant more securely against the seat, thus increasing the seat belt's efficiency.

In the event of a severe frontal impact and if the ignition is switched on, the system may engage the following depending on the force of the impact:

- the seat belt inertia reel pretensioner ***1*** which instantly retracts the seat belt;
- the lap seat belt inertia reel pretensioner ***2*** on the front seats.

- Have the entire restraint system checked following an accident.
- No operation whatsoever is permitted on any part of the system (pretensioners, airbags, computers, wiring) and the system components must not be reused on any other vehicle, even if identical.
- Only qualified personnel from our Network may work on the airbags; otherwise the system may trigger accidentally and cause injury.
- The electric trigger system may only be tested by a specially trained technician using special equipment.
- When the vehicle is scrapped, contact an approved dealer for disposal of the pretensioner and airbags gas generators.

Load limiter

Above a certain severity of impact, this mechanism is used to limit the force of the belt against the body so that it is at an acceptable level.

driver and passenger front Airbags

Fitted to the driver and passenger sides.

A symbol on the lower section of the windscreen indicates if this equipment is present (depending on the vehicle).

Each airbag system consists of:

– an airbag and gas generator fitted on the steering wheel for the driver and in the dashboard for the passenger;

– an electronic unit for monitoring the system controlling the gas generator electrical trigger;

– remote sensors;

– a single warning light on the instrument panel.

The airbag system uses pyrotechnic principles. This explains why, when the airbag inflates, it will generate heat, produce smoke (this does not mean that a fire is about to start) and make a banging noise. In a situation where an airbag is required, it will inflate immediately and this may cause some minor, superficial grazing to the skin or other problems.

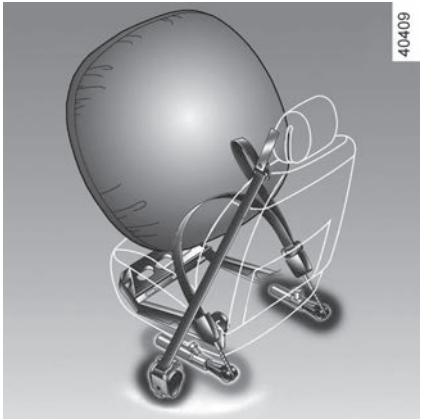

Operation

This system is only operational when the ignition is switched on.

In a severe frontal impact, the airbags inflate rapidly, cushioning the impact of the driver's head and chest against the steering wheel and of the front passenger against the dashboard. The air bags then deflate immediately so that the passengers are not in any way hindered from leaving the vehicle.

Operating faults

This warning light comes on when the engine is started and then goes out after approximately three seconds.

If it does not come on when the ignition is switched on or if it stays on, there is a fault in the system.

Contact your approved Dealer as soon as possible.

Your protection will be reduced until this fault is rectified.

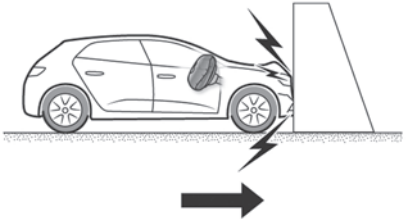

The following cases trigger the pre-tensioners or airbags.

In a frontal impact against a rigid (non-deformable) surface at an impact speed equal to or greater than **16 mph (25 km/h)**.

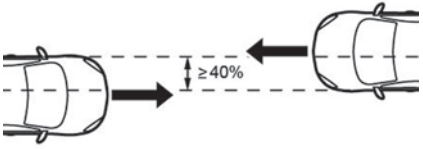

In a frontal impact with another vehicle of an equivalent or higher category, with an impact area equal to or greater than 40%, where the speed of both vehicles is equal to or greater than **25 mph (40 km/h)**.

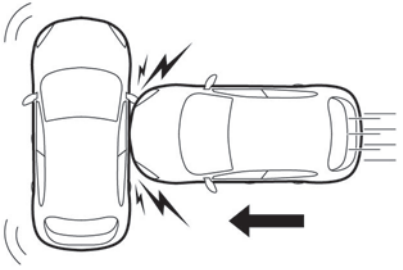

In a side impact with another vehicle of an equivalent or higher category, at an impact speed equal to or greater than **31 mph (50 km/h)**.

In the following examples, the pretensioners or the airbags could operate:

– impact under vehicle such as pavement;

– potholes;

– drop or hard landing;

– stones;

– ...

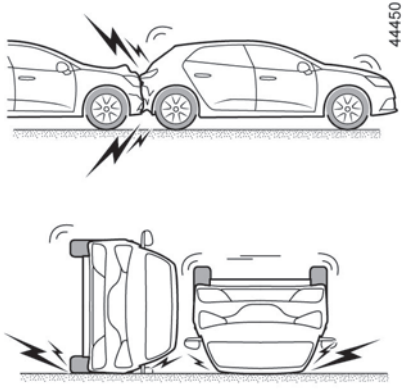

In the following examples, there is a risk that pretensioners or**airbags may not be triggered:**

– rear impact, however severe;

– the vehicle overturning;

– ...

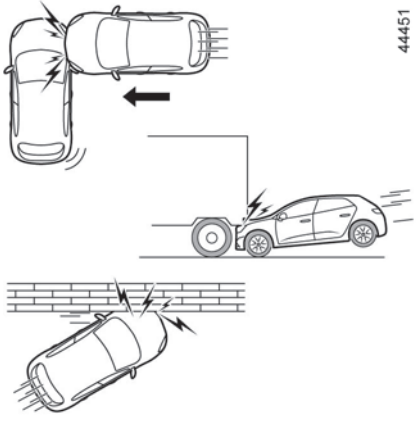

– side impact to the front or rear of the vehicle;

– frontal impact, under the tail of a lorry;

– frontal impact against an obstacle with a sharp angle;

– ...

METHODS OF RESTRAINT IN ADDITION TO THE FRONT SEAT BELTS (6/6)

All of the warnings below are given so that the airbag is not obstructed in any way when it is inflated and also to prevent the risk of serious injuries caused by items which may be dislodged when it inflates.

Warnings concerning the driver's airbag

– Do not modify the steering wheel or the steering wheel boss.

– Do not cover the steering wheel boss under any circumstances.

– Do not attach any objects (badge, logo, clock, telephone holder, etc.) to the steering wheel boss.

– The steering wheel must not be removed (except by qualified personnel from our Network).

– Do not sit too close to the steering wheel when driving: sit with your arms slightly bent (see "Adjusting your driving position" ➥ 1.37). This will allow sufficient space for the airbag to deploy correctly and be fully effective.

Warnings concerning the passenger airbag

– Do not attach or glue any objects (badge, logo, clock, telephone holder, etc.) to the dashboard on or near the airbag.

– Do not place anything between the dashboard and the passenger (pet, umbrella, walking stick, parcels, etc.).

– The passenger must not put his or her feet on the dashboard or seat as there is a risk that serious injuries may occur. In general, parts of the body should be kept away from the dashboard (knees, hands, head, etc.).

– The devices in addition to the front passenger seat belt should be reactivated as soon as a child seat is removed, to ensure the protection of the passenger in the event of an impact.

A REAR-FACING CHILD SEAT MUST NOT BE FITTED TO THE FRONT PASSENGER SEAT UNLESS THE RESTRAINT SYSTEMS IN ADDITION TO THE FRONT PASSENGER SEATBELT ARE DEACTIVATED ➥ 1.71.

METHODS OF RESTRAINT IN ADDITION TO THE REAR SEAT BELTS

Depending on the vehicle, they will consist of:

- **side seat belt inertia reel pretensioners**;
- **chest force limiters.**

These systems are designed to act independently or together when the vehicle is subjected to a frontal impact.

Depending on the severity of the impact, the system can trigger:

- seat belt locking;
- the seat belt inertia reel pretensioner (which engages to correct seat belt slack).

Force limiter

Above a certain severity of impact, this mechanism is used to limit the force of the belt against the body so that it is at an acceptable level.

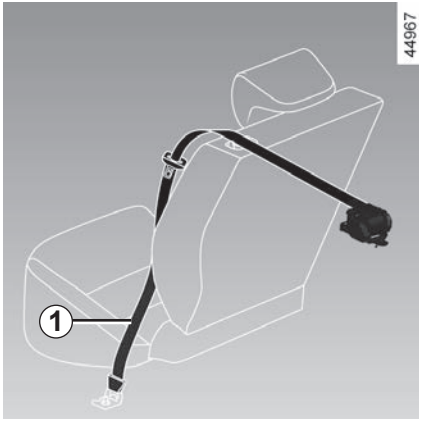

Side seat belt pretensioners

The pretensioners hold the seat belt against the body, holding the occupant more securely against the seat, thus increasing the seat belt's efficiency.

With the ignition on, following a significant frontal impact and depending on the severity of the impact, the system may trigger the seat belt inertia reel pretensioner ***1***, which instantly retracts the seat belt.

- Have the entire restraint system checked following an accident.
- No operation whatsoever is permitted on any part of the system (pretensioners, airbags, computers, wiring) and the system components must not be reused on any other vehicle, even if identical.
- Only qualified personnel from our Network may work on the airbags; otherwise the system may trigger accidentally and cause injury.
- The electric trigger system may only be tested by a specially trained technician using special equipment.
- When the vehicle is scrapped, contact an approved dealer for disposal of the pretensioner and airbags gas generators.

Side Airbag

This airbag may be fitted to each of the front seats and is activated at the sides of the seats (door side) to protect the occupants in the event of a severe side impact.

Curtain Airbag

This is an airbag fitted (depending on the vehicle) along the upper sides of the vehicle – they inflate along the front and rear door side windows to protect the passengers in the event of a severe side impact.

Warning relating to the side airbag

– **Fitting seat covers:** seats equipped with an airbag require covers specifically designed for your vehicle. Contact an approved dealer to find out if these covers are available. The use of any covers other than those designed for your vehicle (including those designed for another vehicle) may affect the operation of the airbag and reduce your protection.

– Do not place any accessories, objects or even pets between the seatback, the door and the internal fittings. Do not cover the seatback with any items such as clothes or accessories. This may prevent the air bag from operating correctly or cause injury when the airbag is deployed.

– No work or modification whatsoever may be carried out on the seat or internal fittings, except by qualified personnel from an approved Dealer.

– This airbag operates through slits in the front seatbacks (door side): never insert any objects in these slits.

ADDITIONAL METHODS OF RESTRAINT

All of the warnings below are given so that the airbag is not obstructed in any way when it is inflated and also to prevent the risk of serious injuries caused by items which may be dislodged when it inflates.

The airbag is designed to complement the action of the seat belt. Both the airbag and the seat belt are integral parts of the same protection system. It is therefore essential to wear seat belts at all times. If seat belts are not worn, the occupants are exposed to the risk of serious injury in the event of an accident. It may also increase the risk of minor superficial injuries occurring when the airbag is deployed, although such minor injuries are always possible with airbags.

If the vehicle should overturn or in the event of a rear impact, however severe, the pretensioners and airbags are not always triggered. Impacts to the underside of the vehicle, e.g. from pavements, potholes or stones, can all trigger these systems.

– No work or modification **whatsoever** may be carried out on any part of the airbag system (airbags, pretensioners, computer, wiring harness, etc.), except by qualified Network personnel.

– To ensure that the system is in good working order and to avoid accidental triggering of the system which may cause injury, only qualified Network personnel may work on the airbag system.

– As a safety precaution, have the airbag system checked if your vehicle has been involved in an accident, or is stolen or broken into.

– When selling or lending the vehicle, inform the user of these points and hand over this handbook with the vehicle.

– When scrapping your vehicle, contact your approved Dealer for disposal of the gas generator(s).

Carrying children

Please ensure that you comply with the legislation of your country.

Children, and adults, must be correctly seated and strapped in for all journeys. The children being carried in your vehicle are your responsibility.

A child is not a miniature adult. Children are at risk of specific injuries as their muscles and bones have not yet finished growing. The seat belt alone would not provide suitable protection. Use an approved child seat and ensure you use it correctly.

To prevent the doors being opened, use the “Child lock” feature. ➥ 1.31.

A collision at 31 mph (50 km/h) is the same as falling a distance of 10 metres.

Transporting a child without a restraint is the equivalent of allowing him or her to play on a fourth-floor balcony without railings.

Never travel with a child held in your arms.

In the event of an accident, you will not be able to keep hold of the child, even if you yourself are wearing a seat belt.

If your vehicle has been involved in a road accident, replace the child seat and have the seat belts and ISOFIX anchorage points checked.

Driver’s responsibility when parking or stopping the vehicle

Never leave an animal, child or adult who is not self-sufficient alone on your vehicle, even for a short time.

They may pose a risk to themselves or to others by starting the engine, activating equipment such as the electric windows or by locking the doors.

Also, in hot and/or sunny weather, please remember that the temperature inside the passenger compartment increases very quickly.

RISK OF DEATH OR SERIOUS INJURY.

Using a child seat

The level of protection offered by the child seat depends on its ability to restrain your child and on its installation. Incorrect installation compromises the protection it offers the child in the event of harsh braking or an impact.

Before purchasing a child seat, check that it complies with the regulations for the country you are in and that it can be fitted in your vehicle. Consult an approved dealer to find out which seats are recommended for your vehicle.

The regulations on transporting children are specific to each country. The use of a child seat during transport depends on the age and/or the size and/or weight of the child.

For children who do not need to be transported in a child seat, make sure that the seat belt is correctly adjusted and fastened.

In all cases, you must comply with the regulations of the particular country you are in.

Before fitting a child seat, read the manual and respect its instructions. If you experience any difficulties during installation, contact the manufacturer of the equipment. Keep the instructions with the seat.

Set a good example by always fastening your seat belt and teaching your child:

– to strap themselves in correctly;

– to always get in and out of the car at the kerb, away from busy traffic.

Do not use a second-hand child seat or one without an instruction manual.

Check that there are no objects in the vicinity of the child seat which could impede its operation.

Never leave a child unattended in the vehicle.

Check that your child is always strapped in and that the belt or safety harness used is correctly set and adjusted. Avoid wearing bulky clothing which could cause the belts to slacken ➥ 1.37.

Never let your child put their head or arms out of the window.

Check that the child is in the correct position for the entire journey, especially if asleep.

Rear-facing child seats

A baby's head is, proportionally, heavier than that of an adult and its neck is very fragile. Transport the child in this position for as long as possible (until the age of 2 at the very least). It supports both the head and the neck.

Choose a bucket type seat for best side protection and change it as soon as the child's head is higher than the shell.

Forward-facing child seats

Up to 18 kg or 4 years, the child may travel on a forward-facing seat.

Choose your seat according the child's size: their head and abdomen are the areas which must be most protected. A forward-facing child seat which is firmly attached to the vehicle will reduce the risk of impact to the head. Ensure your child travels in a forward-facing seat with a harness for as long as their size permits.

Choose a bucket type seat for optimum side protection.

Booster cushions

From 15 kg or 4 years, the child can travel using a booster seat, which will enable the seat belt to be adapted to suit his/her size and shape. The booster seat cushion must be fitted with guides to position the seat belt on the child's thighs rather than the stomach. It is recommended that you use a seat-back fitted with a belt strap guide which can be adjusted in terms of height to position the seat belt in the centre of the shoulder. It must never rest on the neck or on the arm.

Choose a bucket type seat for optimum side protection.

CHILD SAFETY: choosing a child seat mounting (1/3)

There are two ways of attaching child seats: via the seat belt or using the ISOFIX system.

Attachment via the seat belt

The seat belt must be adjusted to ensure that it is effective in the event of harsh braking or an impact.

Ensure that the strap paths indicated by the child seat manufacturer are respected.

Always check that the seat belt is correctly fastened by pulling it up, then pulling it out fully whilst pressing on the child seat.

Check that the seat is correctly held by moving it from side to side and back to front: the seat should remain firmly fixed.

Check that the child seat has not been installed at an angle and that it is not resting against a window.

Do not use the child seat if it may unfasten the seat belt restraining it: the base of the seat must not rest on the buckle and/or catch of the seat belt.

The seat belt must never be twisted or the tension relieved. Never pass the shoulder strap under the arm or behind the back.
Check that the seat belt has not been damaged by sharp edges.
If the seat belt does not operate normally, it will not protect the child. Consult an approved dealer. Do not use this seat until the seat belt has been repaired.

Attachment using the ISOFIX system

Approved child seats ISOFIX are standardised in accordance with current regulations if any of the four cases below applies:
- ISOFIXuniversal 3-point forward-facing seat;
- ISOFIXsemi-universal 2-point seat;
- specific;
- i-Size which has either:
  - a strap which attaches to the third ring of the seat concerned;
  - or a strut that rests on the vehicle floor, compatible with the approved seat i-Size, the role of which is to prevent the child seat from moving in the event of a collision.

In the latter three cases check that your child seat can be installed by consulting the list of compatible vehicles.

No modifications may be made to the component parts of the restraint system (seat belts, ISOFIX and seats and their mountings) originally fitted.

Attach the child seat with the ISOFIX locks, if these are provided. The ISOFIX system allows quick, easy, safe fitting.

The ISOFIX system consists of 2 rings and, in some cases, a third ring.

The ISOFIX anchorage points have been exclusively designed for child seats with the ISOFIX system. Never fit a different type of child seat, seat belt or other objects to these anchorage points.
Check that nothing is obstructing the anchorage points.
If your vehicle has been involved in a road accident, have the ISOFIX anchorage points checked and replace your child seat.

The two rings ***1*** are located between the seatback and the seat base of the seat and are identified by a symbol.

Before using an ISOFIX child seat that you purchased for another vehicle, check that its installation is authorised. Consult the list of vehicles which can be fitted with the seat from the equipment manufacturer.

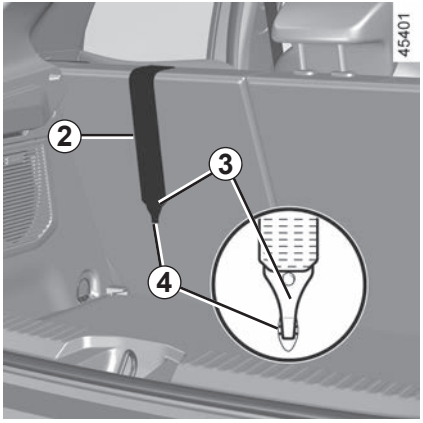

Attachment using the ISOFIX system (continued)

The third ring ***4*** is used to attach the upper strap ***2*** on some child seats.

Rear seats

The upper strap ***2*** should be positioned between the seatback and the rear parcel shelf. To do so, remove the rear parcel shelf ➥ 3.36.
Attach the ***3*** hook on one of the ***4*** rings marked with the symbol.

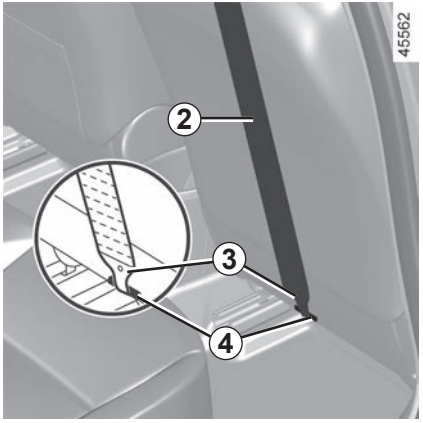

Front passenger seat

Attach the ***3*** hook of the upper strap ***2*** to the ring ***4*** marked with the symbol.

All seats

Pull the upper strap ***2*** so that the back of the child seat comes into contact with the back of the vehicle seat.

The ISOFIX anchorage points have been exclusively designed for child seats with the ISOFIX system. Never fit a different type of child seat, seat belt or other objects to these anchorage points.
Check that nothing is obstructing the anchorage points.
If your vehicle has been involved in a road accident, have the ISOFIX anchorage points checked and replace your child seat.

Check that the seatback of the forward-facing child seat is in contact with the back of the vehicle seat. In this case, the child seat may not always rest on the base of the vehicle seat.

CHILD SAFETY: fitting a child seat, general information (1/2)

Some seats are not suitable for fitting child seats. The diagram on the following page shows you how to attach a child seat.

Fit the child seat in a rear seat wherever possible.

Make sure the child seat or the child's feet do not prevent the front seat from locking correctly. ➥ 1.34.

Check that when installing the child seat in the vehicle it is not at risk of coming loose from its base.

If you have to remove the headrest, check that it is correctly stored so that it does not come loose under harsh braking or impact.

Always attach the child seat to the vehicle even if it is not in use so that it does not come loose under harsh braking or impact.

The types of child seat indicated may not be available. Before using a different child seat, check with the manufacturer that it can be fitted.

In the front seat

The laws concerning children travelling in the front passenger seat differ in every country. Consult the legislation in force and follow the indications on the diagram on the following page.

Before fitting a child seat in this seat (if authorised):

– lower the seat belt as far as possible;

– move the seat as far back as possible;

– gently tilt the seatback away from vertical (approximately 25°);

– on equipped vehicles, raise the seat base as far as possible.

Always fully raise the seat headrest so that it does not interfere with the child seat ➥ 1.36.

After installing the child seat, when this is possible, you can move the vehicle seat forward if necessary (so as to leave enough space in the rear seats for passengers or other child seats). For a rear-facing child seat, do not let it touch the dashboard or move it to the furthest forward position.

Do not change other settings after installing the child seat.

RISK OF DEATH OR SERIOUS INJURY: before fitting a rear-facing child seat in this seat, make sure that the front passenger airbag has been deactivated. ➥ 1.71.

In the rear side seat

A carrycot can be installed across the vehicle and will take up at least two seats. Position the child with his or her feet nearest the door.

Move the front seat as far forward as possible to install a rear-facing child seat, then move back the seat in front as far as it will go, although without allowing it to come into contact with the child seat.

For the safety of the child in the forward-facing position:
– move the relevant seat backwards as far as possible;
– move the seat in front of the child forwards, and set the position of the seatback to avoid contact between the seat and the child's legs.

Ensure that the child seat or the child's feet do not prevent the front seat from locking correctly. ➥ 1.34 or ➥ 3.34.

Always remove the headrest from the rear seat on which the child seat is positioned. ➥ 3.33. If necessary, position the rear seat as far back as possible. This must be done before fitting the child seat. Check that the child seat is resting against the back of the rear seat.

Installing a booster seat (group 2 or 3)

Check the operation (rolling up) of the seat belt ➥ 1.37.

Adjust the seat belt by positioning:

– the shoulder strap on the child's shoulder without touching the neck;

– the lap belt so that it lies flat on the thighs and against the pelvis.

If necessary, adjust the position of the vehicle seat.

Rear centre seat

Check that the belt is suitable for securing your child seat. Consult an approved dealer.

A child seat with floor supports must never be installed on the rear centre seat.

RISK OF DEATH OR SERIOUS INJURY.

Fit the child seat in a rear seat wherever possible.

To install an ISOFIX seat in this seat, detach the central seat belt by hand before engaging the bolts.

Visual installation of the five-door version

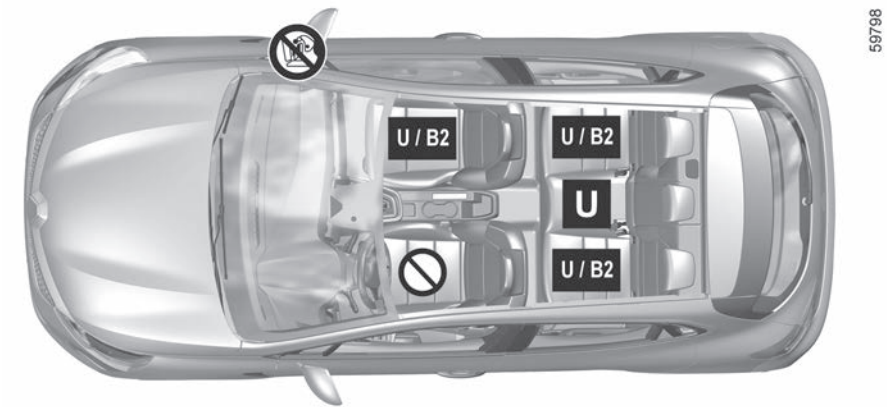

Check the status of the airbag before fitting a child seat or allowing a passenger to use the seat.

Seat not suitable for fitting child seats.

Child seat attached using the belt

U Seat which allows a child seat with “Universal” approval to be attached by a seat belt.

B2: Seat enabling a child seat with “B2“ approval to be attached by seat belt.

RISK OF DEATH OR SERIOUS INJURY: before fitting a rear-facing child seat in this seat, make sure that the front passenger airbag has been deactivated. ➥ 1.71.

Using a child safety system which is not approved for this vehicle will not correctly protect the baby or child. They risk serious or even fatal injury.

Check that your child is always strapped in and that the belt or safety harness used is correctly set and adjusted ➥ 1.37.

If necessary, adjust the seat position accordingly.

CHILD SEATS: attachment by seat belt (2/6)

The table below summarises the information already shown on the diagram on the previous page, to ensure the regulations in force are respected.

Five-seater version					
Type of child seat	**Weight of the child**	**Front passenger seat**		**Rear side seats**	**Rear centre seat**
		Without airbag or with airbag deactivated	**With airbag activated**		
Carrycot fitted across the vehicle Group 0	< 10 kg	X	X	U (2)	X
Rear-facing shell seat Groups 0 or 0 +	< 10 kg and < 13 kg	U (1) (5)	X	U (3)	U (3) (6)
Shell seat/rear-facing seat Groups 0+ and 1	< 13 kg and 9 to 18 kg	U (1) (5)	X	U (3)	U (3) (6)
Forward-facing seat Group 1	9 to 18 kg	X	U (5)	U (4)	U (4) (6)
Booster seat Groups 2 and 3	15 to 25 kg and 22 to 36 kg	X	U / B2 (5)	U / B2 (4)	U (4)

(1) RISK OF DEATH OR SERIOUS INJURY: before fitting a rear-facing child seat in this seat, make sure that the front passenger airbag has been deactivated. ➥ 1.71.

CHILD SEATS: attachment by seat belt (3/6)

X = Seat not suitable for fitting child seats of this type.

U = Seat which allows a child seat with “Universal” approval to be installed using a seat belt; check that it can be fitted.

B2 = Booster seats in groups 2 and 3 (15 to 25 kg and 22 to 36 kg).

(2) A carrycot can be installed across the vehicle and will take up at least two seats. Position the child with his or her feet nearest the door.

(3) If necessary, position the vehicle seat as far back as possible. In order to install a rear-facing child seat, move the front seat as far forward as possible, then move the front seat back as far as it will go, without allowing it to come into contact with the child seat.

(4) In all situations, remove the rear headrest of the seat on which the child seat is positioned. This must be done before fitting the child seat. ➥ 3.33. Move the seat in front of the child forwards, move the seatback forward to avoid contact between the seat and the child’s legs.

(5) Raise the seat to the maximum and position it as far back as possible, tilting the seatback slightly (approximately 25°).

(6) RISK OF DEATH OR SERIOUS INJURY: a child seat with a floor support must never be fitted.

CHILD SEATS: attachment by seat belt (4/6)

The table below summarises the information already shown on the diagram on the previous page, to ensure the regulations in force are respected.

Utility version			
Type of child seat	**Weight of the child**	**Front passenger seat**	
		Without airbag or with airbag deactivated	**With airbag activated**
Carrycot fitted across the vehicle Group 0	< 10 kg	X	X
Rear-facing shell seat Groups 0 or 0 +	< 10 kg and < 13 kg	U (1) (5)	X
Shell seat/rear-facing seat Groups 0+ and 1	< 13 kg and 9 to 18 kg	U (1) (5)	X
Forward-facing seat Group 1	9 to 18 kg	X	U (5)
Booster seat Groups 2 and 3	15 to 25 kg and 22 to 36 kg	X	U / B2 (5)

(1) RISK OF DEATH OR SERIOUS INJURY: before fitting a rear-facing child seat in this seat, make sure that the front passenger airbag has been deactivated. ➥ 1.71.

CHILD SEATS: attachment by seat belt (5/6)

X = Seat not suitable for fitting child seats of this type.

U = Seat which allows a child seat with “Universal” approval to be installed using a seat belt; check that it can be fitted.

B2 = Booster seats in groups 2 and 3 (15 to 25 kg and 22 to 36 kg).

(5) Raise the seat to the maximum and position it as far back as possible, tilting the seatback slightly (approximately 25°).

Visual installation of the utility version

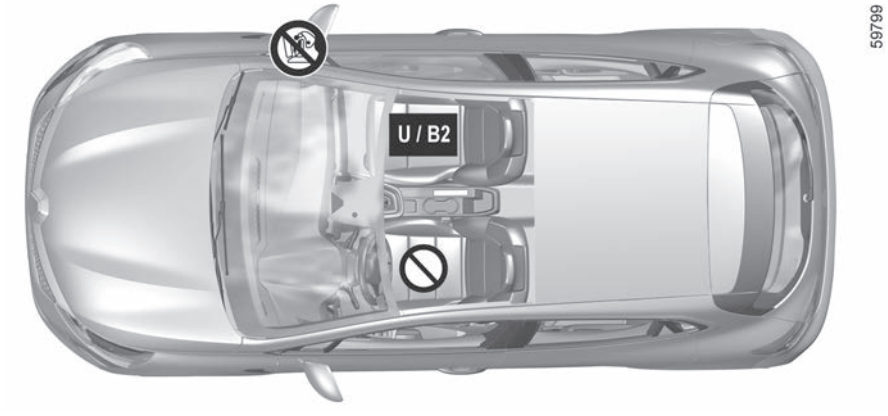

Check the status of the airbag before fitting a child seat or allowing a passenger to use the seat.

Seat not suitable for fitting child seats.

Child seat attached using the belt

U Seat which allows a child seat with “Universal” approval to be attached by a seat belt.

B2: Seat enabling a child seat with “B2” approval to be attached by seat belt.

RISK OF DEATH OR SERIOUS INJURY: before fitting a rear-facing child seat in this seat, make sure that the front passenger airbag has been deactivated. ➥ 1.71.

Using a child safety system which is not approved for this vehicle will not correctly protect the baby or child. They risk serious or even fatal injury.

Check that your child is always strapped in and that the belt or safety harness used is correctly set and adjusted ➥ 1.37.

If necessary, adjust the seat position accordingly.

Visual installation of the five-door version

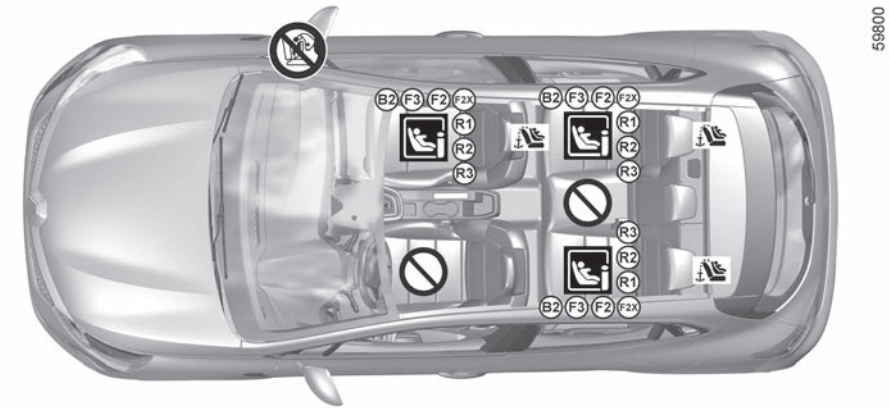

Seat which does not allow a child seat to be fitted.

Child seat fitted using the ISOFIX mounting

Seat which allows an ISOFIX child seat to be fitted.

The rear seats are fitted with an anchorage point which allows a forward-facing ISOFIX child seat with universal approval to be attached. The anchoring points are located on the passenger seatback for the front seat and on the bench seatback for the rear seats.

Using a child safety system which is not approved for this vehicle will not correctly protect the baby or child. They risk serious or even fatal injury.

RISK OF DEATH OR SERIOUS INJURY: before fitting a rear facing child seat on the front passenger seat, check that the airbag has been deactivated ➥ 1.71.

Fit the child seat in a rear seat wherever possible.

To install an ISOFIX seat in this seat, detach the central seat belt by hand before engaging the bolts.

CHILD SEATS: fitted using the ISOFIX SYSTEM (2/6)

The table below summarises the information already shown on the diagram on the previous pages, to ensure the regulations in force are respected.

Type of child seat	Weight of the child	Seat size ISOFIX	Front passenger seat		Rear side seats	Rear centre seat
			Without airbag or with airbag deactivated	With airbag activated		
Carrycot fitted across the vehicle Group 0	< 10 kg	L1 [F] L2 [G]	X	X	X	X
Rear-facing shell seat Groups 0 or 0 +	< 13 kg	R1 [E]	IL (1) (4)	X	IL (2)	X
Shell seat/rear-facing seat Groups 0+ and 1	< 13 kg and 9 to 18 kg	R3 [C] R2 [D]	IL (1) (4)	X	IL (2)	X
Forward-facing seat Group 1	9 to 18 kg	F3 [A] F2 [B] F2X [B1]	X	IUF - IL (1)	IUF - IL (2) (3)	X
Booster seat Groups 2 and 3	15 to 25 kg and 25 to 36 kg	B2	X	IUF - IL (1)	IUF - IL (2) (3)	X
Seat i-Size			i-U (1) (4)	i-UF	i-U	X

CHILD SEATS: fitted using the ISOFIX SYSTEM (3/6)

X = Seat not suitable for fitting child seats of this type.

IUF/IL = On equipped vehicles, seat which allows an approved “Universal/semi-universal” or “vehicle specific” child seat to be attached using the ISOFIX system; check that it can be fitted.

i-U = Suitable for “universal” front-facing and rear-facing i-Size restraint devices.

i-UF = Suitable only for “universal” front-facing and rear-facing i-Size restraint devices.

(1) Raise the seat to the maximum and position it as far back as possible, tilting the seatback slightly (approximately 25°).

(2) If necessary, position the vehicle seat as far back as possible. In order to install a rear-facing child seat, move the front seat as far forward as possible, then move the front seat back as far as it will go, without allowing it to come into contact with the child seat.

(3) In all situations, remove the rear headrest of the seat on which the child seat is positioned. This must be done before fitting the child seat. ➥ 3.33. Move the seat in front of the child forwards, move the seatback forward to avoid contact between the seat and the child’s legs.

The size of the ISOFIX child seat is indicated by a letter:

– A, B, B1 [F3, F2, F2X]: for forward-facing seats in Group 1 (9 to 18 kg);

– CandD [R3,R2]: rear-facing seats or shell seats in Group 0+ (less than 13 kg) or Group 1 (9 to 18 kg);

– E [R1]: rear-facing shell seats in group 0 (less than 10 kg) or 0+ (less than 13 kg);

– F, G [L1, L2]: carrycots in group 0 (less than 10 kg);

– [B2]: boosters in groups 2 and 3 (15 to 25 kg and 22 to 36 kg).

(4) RISK OF DEATH OR SERIOUS INJURY: before fitting a rear-facing child seat in this seat, make sure that the front passenger airbag has been deactivated. ➥ 1.71.

CHILD SEATS: fitted using the ISOFIX SYSTEM (4/6)

The table below summarises the information already shown in the diagram on the following pages, to ensure the applicable regulations are respected.

Utility version				
Type of child seat	**Weight of the child**	**Seat size ISOFIX**	**Front passenger seat**	
			Without airbag or with airbag deactivated	**With airbag activated**
Carrycot fitted across the vehicle Group 0	< 10 kg	L1 [F] L2 [G]	X	X
Rear-facing shell seat Groups 0 or 0 +	< 13 kg	R1 [E]	IL (1) (4)	X
Shell seat/rear-facing seat Groups 0+ and 1	< 13 kg and 9 to 18 kg	R3 [C]	X	X
		R2 [D]	IL (1) (4)	X
Forward-facing seat Group 1	9 to 18 kg	F3 [A] F2 [B] F2X [B1]	X	IUF - IL (1)
Booster seat Groups 2 and 3	15 to 25 kg and 25 to 36 kg	B2	X	IUF - IL (1)
Seat i-Size			i-U (1) (4)	i-UF

CHILD SEATS: fitted using the ISOFIX SYSTEM (5/6)

X = Seat not suitable for fitting child seats of this type.

IUF/IL = On equipped vehicles, seat which allows an approved “Universal/semi-universal” or “vehicle specific” child seat to be attached using the ISOFIX system; check that it can be fitted.

i-U = Suitable for “universal” front-facing and rear-facing i-Size restraint devices.

i-UF = Suitable only for “universal” front-facing and rear-facing i-Size restraint devices.

(1) Position the vehicle seat as far back as possible and gently tilt the seatback (approximately 25°).

The size of the ISOFIX child seat is indicated by a letter:

– A, B, B1 [F3, F2, F2X]: for forward-facing seats in Group 1 (9 to 18 kg);

– CandD [R3,R2]: rear-facing seats or shell seats in Group 0+ (less than 13 kg) or Group 1 (9 to 18 kg);

– E [R1]: rear-facing shell seats in group 0 (less than 10 kg) or 0+ (less than 13 kg);

– F, G [L1, L2]: carrycots in group 0 (less than 10 kg);

– [B2]: boosters in groups 2 and 3 (15 to 25 kg and 22 to 36 kg).

(4) RISK OF DEATH OR SERIOUS INJURY: before fitting a rear-facing child seat in this seat, make sure that the front passenger airbag has been deactivated. ➥ 1.71.

Visual installation of the utility version

Seat which does not allow a child seat to be fitted.

Using a child safety system which is not approved for this vehicle will not correctly protect the baby or child. They risk serious or even fatal injury.

RISK OF DEATH OR SERIOUS INJURY: before fitting a rear facing child seat on the front passenger seat, check that the airbag has been deactivated ➥ 1.71

Child seat fitted using the ISOFIX mounting

Seat which allows an ISOFIX child seat to be fitted.

The rear seats are fitted with an anchorage point which allows a forward-facing ISOFIX child seat with universal approval to be attached. The anchoring points are located on the passenger seatback for the front seat and on the bench seatback for the rear seats.

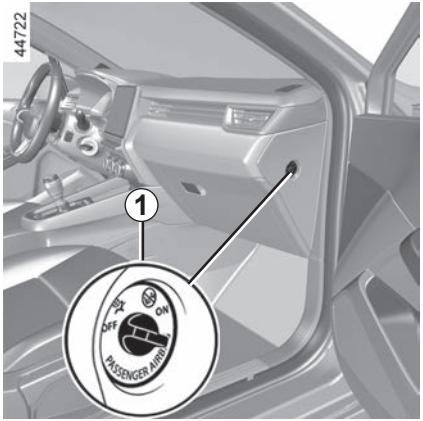

Deactivating the front passenger airbag

Before installing a child seat on the front passenger seat:

– check that the child seat can be installed on this seat;

– it is essential **to deactivate** the airbagfor a rear-facing child seat.

To deactivate the airbag: with the vehicle stationary and the ignition switched off, push and turn lock ***1*** to the **OFF** position.

When the ignition is switched on, it is **essential** to check that the warning light is illuminated on the display ***2***.

This light remains permanently lit to let you know that you can fit a child seat.

The passenger airbag may only be activated or deactivated when the **vehicle is stationary**, **with the ignition off.**

If it is interfered with when the vehicle is being driven, indicator lights and will come on.

Switch the ignition off then on again to reset the airbag in accordance with the lock position.

DANGER

Since operation of the front passenger airbag is not compatible with the position of a rear-facing child seat, **NEVER** fit a rear-facing child restraint system in a seat protected by an ACTIVATED front **airbag** . This can lead to the **DEATH** of the **CHILD** or **SERIOUS INJURY**.

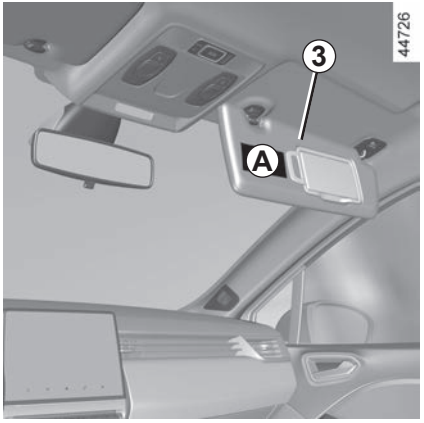

The markings on the dashboard and labels ***A*** on each side of the passenger sun visor ***3*** (example: label shown above) remind you of these instructions.

DANGER

Since operation of the front passenger airbag is not compatible with the position of a rear-facing child seat, **NEVER** fit a rear-facing child restraint system in a seat protected by an ACTIVATED front **airbag**. This can lead to the **DEATH** of the **CHILD** or **SERIOUS INJURY**.

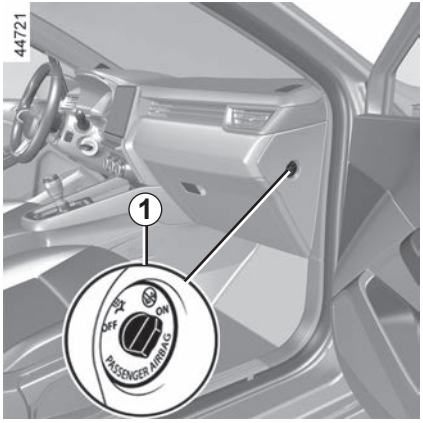

Activating the front passenger airbag

You should reactivate the airbag as soon as you remove the child seat from the front passenger seat to ensure the protection of the front passenger in the event of an impact.

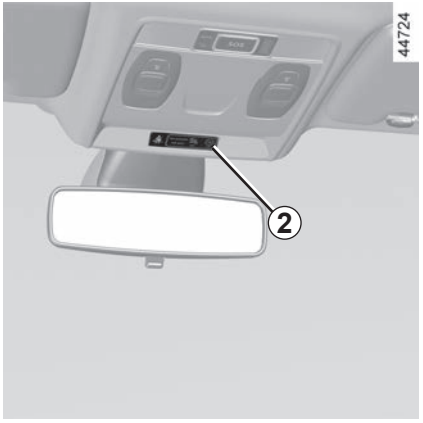

To restart the airbag: vehicle stopped, **ignition switched off,** press and turn the lock to ***1*** position **ON**.

When the ignition is switched on, you **must** check that the warning light is off and that the warning light comes on the display ***2*** after each start-up for around 60 seconds.

The front passenger airbag has been activated.

Operating faults

It is forbidden to fit a rear-facing child seat to the front passenger seat if the airbag activation/deactivation system is faulty.

Allowing any other passenger to sit in that seat is not recommended.

Contact your approved dealer as soon as possible.

The passenger airbag may only be activated or deactivated when the **vehicle is stationary with the ignition off**.

If it is interfered with when the vehicle is being driven, indicator lights and will come on.

Switch the ignition off then on again to reset the airbag in accordance with the lock position.

DRIVING POSITION: LEFT-HAND DRIVE (1/2)

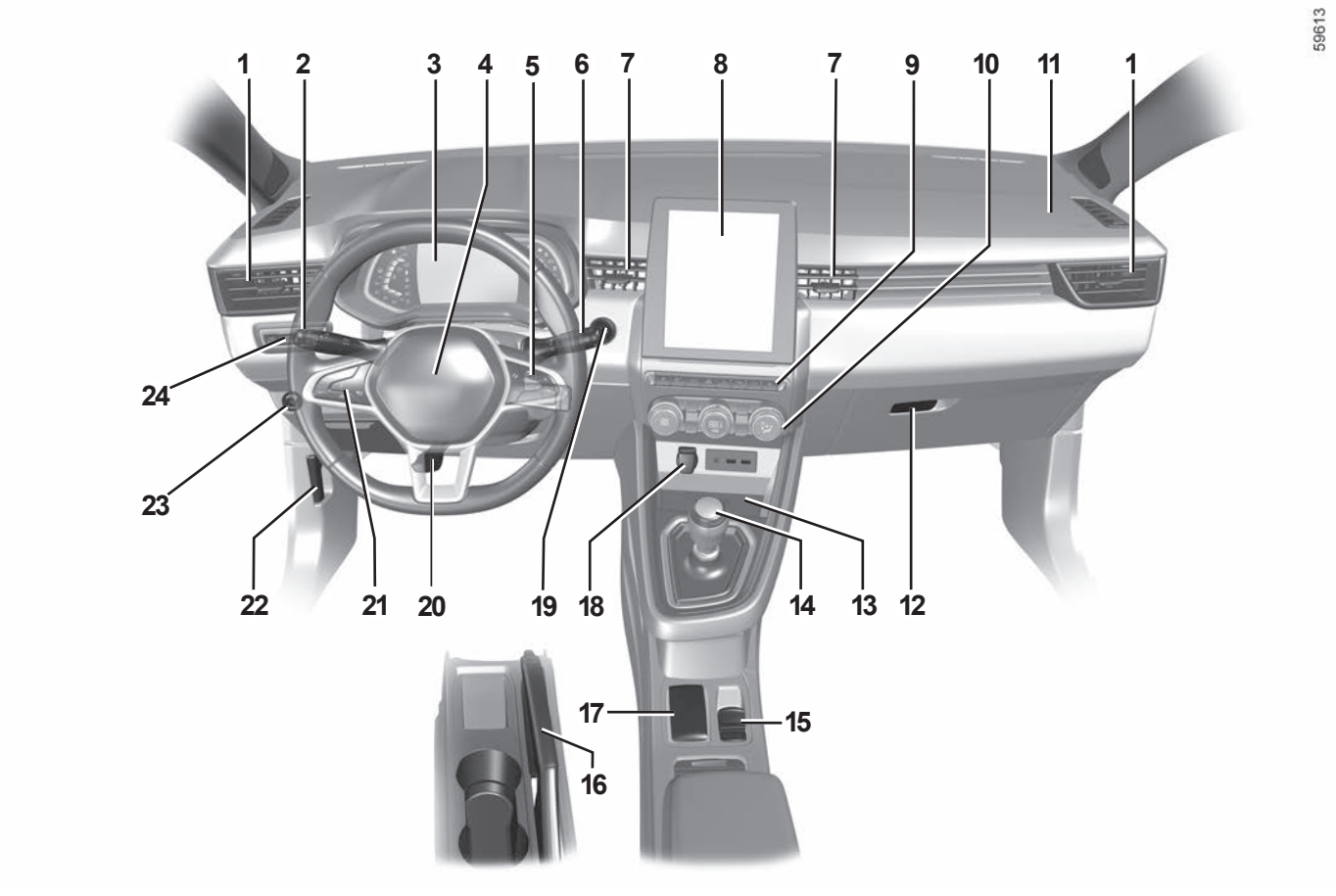

DRIVING POSITION: LEFT-HAND DRIVE (2/2)

The equipment fitted, described below, DEPENDS ON THE VERSION AND COUNTRY.

1 Side air vents.
2 Stalk for:
- direction indicator lights;
- exterior lights;
- rear fog lights.

3 Instrument panel.
4 Driver airbag and horn location.
5 Controls for:
- on-board computer information read-out and vehicle settings customisation menu,
- remote radio and navigation system.

6 Steering column stalk for windscreen and rear screen wash/wiper.
7 Centre air vents.
8 Multimedia screen.
9 Controls for:
- front seat heating;
- activation/deactivation of the Stop and Start function;
- activation/deactivation, depending on the vehicle, of the ECO or MULTI-SENSE mode;
- hazard warning lights;
- electric door locking;
- activation/deactivation of the parking distance control;
- activating/deactivating the 360° camera;
- ...

10 Heating or air conditioning controls.
11 Passenger airbag location.
12 Glove compartment.
13 Charging zone/telephone storage.
14 Gearstick.
15 Controls for:
- activating/deactivating the electronic parking brake;
- activation/deactivation of the function AUTOHOLD.

16 Handbrake.
17 “Hands-free” card holder.
18 Accessories socket.
19 Engine start/stop button.
20 Control for adjusting steering wheel height and reach.
21 Main switch and controls for the Cruise control/speed limiter, adaptive cruise control and “Lane Centring” functions.
22 Bonnet release control.
23 LPG control.
24 Controls for:
- lighting rheostat for control instru- ments;
- headlight beam height remote adjustment;
- activation/deactivation of the steering wheel heating;
- activation/deactivation of Lane Keeping Assist and Lane Departure Warning.

DRIVING POSITION: RIGHT-HAND DRIVE (1/2)

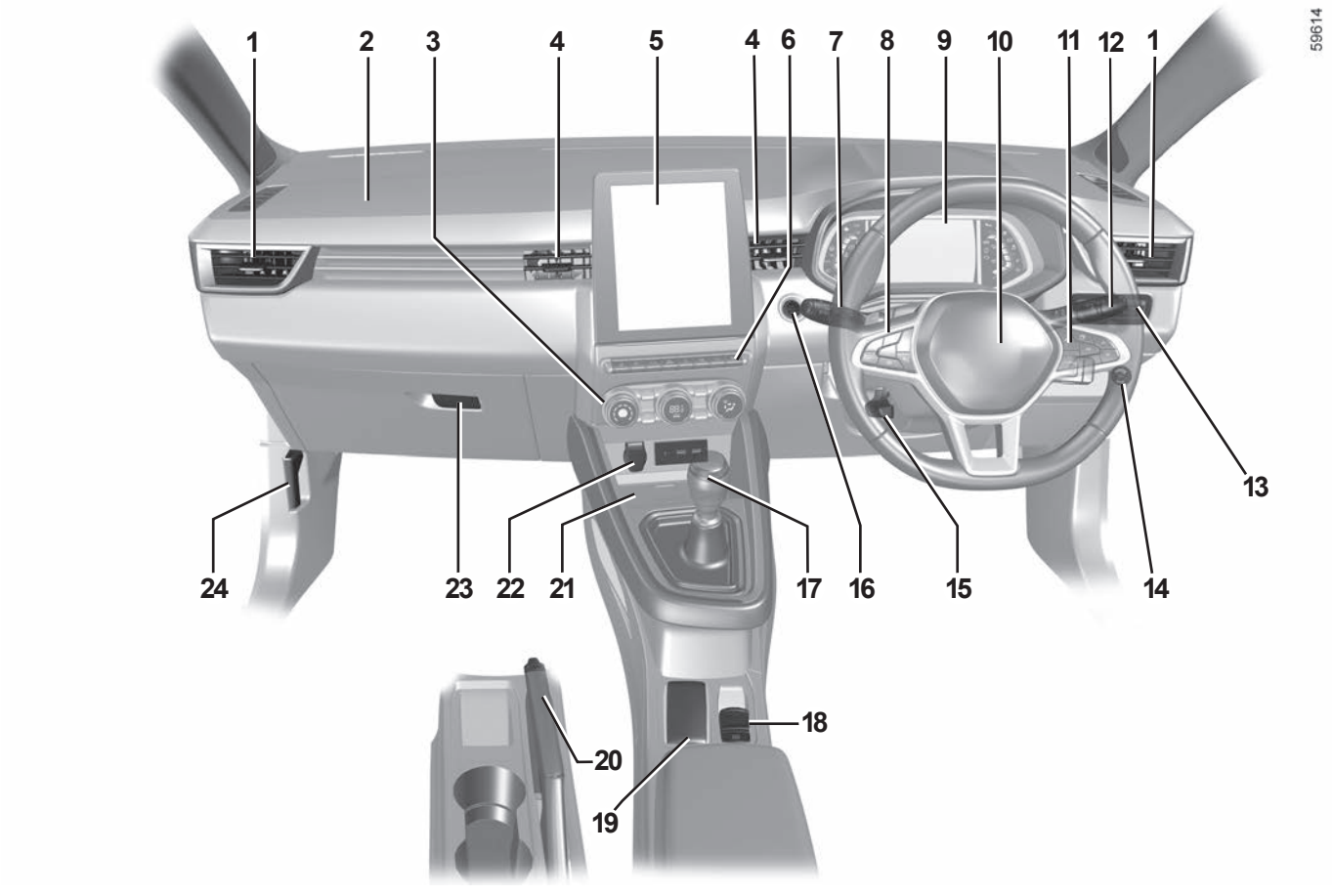

DRIVING POSITION: RIGHT-HAND DRIVE (2/2)

The equipment fitted, described below, DEPENDS ON THE VERSION AND COUNTRY.

1 Side air vents.
2 Passenger airbag location.
3 Heating or air conditioning controls.
4 Centre air vents.
5 Multimedia screen.
6 Controls for:
- front seat heating;
- activation/deactivation of the Stop and Start function;
- activation/deactivation, depending on the vehicle, of the ECO or MULTI-SENSE mode;
- hazard warning lights;
- electric door locking;
- activation/deactivation of the parking distance control;
- activating/deactivating the 360° camera;
- ...

7 Stalk:
- direction indicator lights;
- exterior lights;
- rear fog lights.

8 Main switch and controls for the Cruise control/speed limiter, adaptive cruise control and “Lane Centring” functions.
9 Instrument panel.
10 Driver airbag and horn location.
11 Controls for:
- on-board computer information read-out and vehicle settings customisation menu,
- remote radio and navigation system.

12 Steering column stalk for windscreen and rear screen wash/wiper.
13 Controls for:
- lighting rheostat for control instru- ments;
- headlight beam height remote adjustment;
- activation/deactivation of the steering wheel heating;
- activation/deactivation of Lane Keeping Assist and Lane Departure Warning.

14 LPG control.
15 Control for adjusting steering wheel height and reach.
16 Engine start/stop button.
17 Gearstick.
18 Controls for:
- activating/deactivating the electronic parking brake;
- activation/deactivation of the function AUTOHOLD.

19 Hands-free card holder.
20 Handbrake.
21 Charging zone/telephone storage.
22 Accessories socket.
23 Glovebox.
24 Bonnet release control.

WARNING LIGHTS (1/6)

The display of information shown below DEPENDS ON THE VEHICLE EQUIPMENT AND COUNTRY.

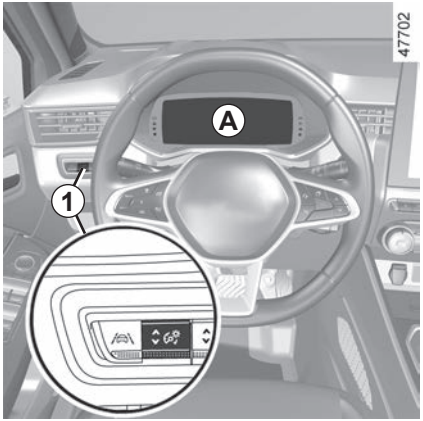

Instrument panel *A* or ***B***: lights up when the ignition is switched on.

Press or lift the ***1*** switch as many times as required to adjust the intensity.

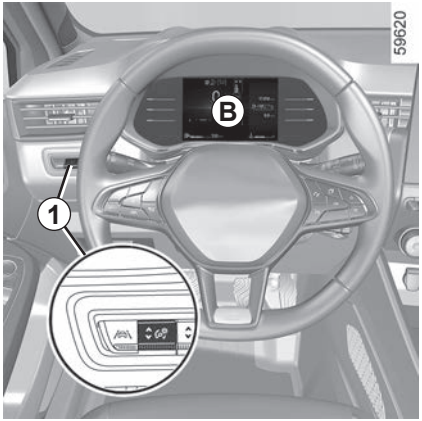

In some cases, the appearance of a warning light is accompanied by a message on the instrument panel.

Warning light means you should drive **very carefully to an authorised dealer as soon as possible**.

If you fail to follow this recommendation, you risk damaging your vehicle.

For your own safety, the STOP warning light requires you to stop immediately, as soon as traffic conditions allow.

Switch off the engine and do not restart it.

Call an approved Dealer.

If no lights or sounds are apparent, this indicates a fault in the instrument panel.

This indicates that it is essential to stop immediately (as soon as traffic conditions allow).

Ensure that the vehicle is correctly immobilised and contact an approved Dealer.

WARNING LIGHTS (2/6)

The display of information shown below DEPENDS ON THE VEHICLE EQUIPMENT AND COUNTRY.

Side light warning light

Main beam headlight tell-tale

Dipped beam headlight tell-tale

Front fog light tell-tale

Rear fog lights tell-tale

Automatic main beam headlight indicator light ➥ 1.112

Left-hand direction indicator tell-tale

Right-hand direction indicator tell-tale light

Indicator light airbag

It lights up when the ignition or the engine is switched on and goes off after a few seconds.

If it does not come on when the ignition is switched on, or comes on when the engine is running, there is a fault in the system.

Contact your approved Dealer as soon as possible.

STOP light

This lights up when the ignition or engine is switched on and goes out as soon as the engine is running.

It comes on with other warning lights and/or messages, and is accompanied by a beep.

For your own safety, it requires you to stop immediately, as soon as traffic conditions allow.

Switch off the engine and do not restart it.

Contact an approved Dealer.

Brake circuit fault warning light

It lights up when the ignition or the engine is switched on and goes off after a few seconds.

If it comes on during braking and is accompanied by the STOP warning light and a beep, it indicates that the fluid level in the circuit is low or that there is a braking system fault.

Stop as soon as traffic conditions allow and consult an approved dealer.

Battery charge warning light

It lights up when the ignition or the engine is switched on and goes off after a few seconds.

If it comes on on the road, accompanied by the STOP warning light and a beep, this indicates an overload or discharge in the electrical circuit.

Stop as soon as traffic conditions allow and contact an approved Dealer.

The display of information shown below DEPENDS ON THE VEHICLE EQUIPMENT AND COUNTRY.

Oil pressure warning light

It lights up when the ignition or the engine is switched on and goes off after a few seconds.

If it comes on on the road, accompanied by the STOP warning light and a beep, stop immediately and cut the ignition.

Check the oil level.

If the level is normal, the warning light is related to something else.

Call an approved Dealer.

Variable power-assisted steering warning light

It lights up when the ignition or the engine is switched on and goes off after a few seconds.

If it comes on while driving, alongside the warning light STOP, this means there is a system fault.

Contact an authorised dealer.

Door status warning light

Warning light

If it appears in red during driving and is accompanied by the STOP indicator light, you must, for your safety, stop as soon as traffic conditions allow.

Switch off the engine and do not restart it.

Call an approved Dealer.

If it appears in yellow during driving and is accompanied by the warning light, visit an approved dealer as soon as possible. **Meanwhile, drive with care**.

If you fail to follow this recommendation, you risk damaging your vehicle.

Handbrake "on" and electronic parking brake warning light ➥ 2.23 ➥ 2.24

"AUTOHOLD" system warning ➥ 2.28

Warning light

This lights up when the ignition or engine is switched on and goes out as soon as the engine is running.

It can light up in conjunction with other warning lights and/or messages on the instrument panel.

It means you should **drive very carefully** to an approved Dealer as soon as possible.

If you fail to follow this recommendation, you risk damaging your vehicle.

Warning light for the electronic stability program (ESC) and traction control system

It lights up when the ignition or the engine is switched on and goes off after a few seconds.

There are several reasons for the warning light to appear: ➥ 2.46.

Warning light for non-availability of the electronic stability program (ESC) and traction control system

WARNING LIGHTS (4/6)

The display of information shown below DEPENDS ON THE VEHICLE EQUIPMENT AND COUNTRY.

Anti-lock braking warning light

It lights up when the ignition or the engine is switched on and goes off after a few seconds.

If it lights up when you are driving, it indicates a fault in the anti-lock braking system.

Braking will then be as normal, without the ABS.

Contact your approved Dealer straight away.

Particle filter system warning light ➥ 2.15 ➥ 2.17

Warning light for reagent level and faults in the exhaust gas reduction system ➥ 1.127

Tyre under-inflation warning light

It lights up when the ignition or the engine is switched on and goes off after a few seconds ➥ 2.40.

Preheating warning light (Diesel version)

This should come on when the ignition is switched on.

It indicates that the heater plugs are in operation.

It goes out when preheating is complete.

The engine can be started.

Toxic Fume Filter System Warning Light

On vehicles that are equipped, this light comes on when the engine is started and, depending on the vehicle, when the ignition is switched off while the engine is in the standby phase ➥ 2.11 then it goes out.

– If it lights up continuously, consult your approved dealer as soon as possible;

– If it flashes, reduce the engine speed until the light stops flashing. Contact your approved Dealer as soon as possible ➥ 2.38.

Low fuel level warning light

It lights up orange when the ignition or the engine is switched on and goes off after a few seconds.

If the light becomes orange while driving and a beep sounds, fill up with fuel as soon as possible.

There is only approximately 31 miles (50 km) worth of fuel left.

Mode warning light ECO

It comes on when ECO mode is active ➥ 2.29.

Freewheel indicator light ➥ 2.29

Gear change indicators

This lights up to advise you to change to a higher gear (arrow pointing upwards) or lower gear (arrow pointing downwards) ➥ 2.29.

WARNING LIGHTS (5/6)

The display of information shown below DEPENDS ON THE VEHICLE EQUIPMENT AND COUNTRY.

Coolant temperature warning light

This lights up blue when you switch on the ignition or start the engine.

If it turns red, stop and let the engine idle for a minute or two.

The temperature should lower and the warning light should return to a blue colour.

Otherwise, stop the engine.

Let the engine cool down before checking the coolant.

Contact an approved Dealer.

Engine standby warning light ➥ 2.11

Unavailability of engine standby warning light ➥ 2.11

Brake pedal warning light

This lights up when the brake pedal should be depressed ➥ 2.148.

Speed limiter warning light ➥ 2.94

Cruise control warning light ➥ 2.98

Adaptive cruise control warning light Stop and Go ➥ 2.103

Assisted parking brake fault light ➥ 2.143

Overspeed warning light ➥ 1.84

Lane departure system warning light ➥ 2.51

Lane Keeping Assist system warning light ➥ 2.56

Lane Centring system warning light ➥ 2.117

(Depending on vehicle) Indicator of failure or unavailability of active emergency braking ➥ 2.82

"Hands off steering wheel" detection warning light ➥ 2.56

On display *C*

Passenger **Airbag ON** ➥ 1.71

Passenger **Airbag OFF** ➥ 1.71

Front and rear seat belt reminder warning light (depending on the vehicle) ➥ 1.37

The display of information shown below DEPENDS ON THE VEHICLE EQUIPMENT AND COUNTRY.

Warning lights specific to the E-Tech hybrid version

Electrotechnical system warning light

It appears when the temperature of the electrical assembly is too high.

Stop the vehicle without switching off the ignition.

The temperature should lower and the warning light should disappear.

If this is not the case, please consult an Authorised Dealer.

The warning light can be accompanied by a drop in vehicle performance.

Secondary 12 V battery charge warning light

If it comes on, accompanied by the STOP warning light and a beep, this means that the electrical circuit is overcharged or discharged ➥ 5.27.

Traction battery fault warning light

If it appears, accompanied by the warning light, this indicates a fault related to the operation of the traction battery.

Contact your approved Dealer straight away.

Traction battery gauge indicator light

This appears in yellow when the traction battery charge level has reached the reserve threshold ➥ 1.84.

If no lights or sounds are apparent, this indicates a fault in the instrument panel.

This indicates that it is essential to stop immediately (as soon as traffic conditions allow).

Ensure that the vehicle is correctly immobilised and contact an approved Dealer.

Electric operating mode warning light

It is displayed when only the electric motor and traction battery are powering the movement of the vehicle ➥ 1.6.

Electrotechnical system fault warning light

When it comes on, this indicates an electrotechnical fault related to the electrical assembly (traction battery and electric motor).

Contact your approved Dealer straight away.

Electric motor fault warning light

When it comes on, this indicates a fault with the electrotechnical system linked to the electric motor.

Contact your approved Dealer straight away.

Pedestrian horn fault warning light

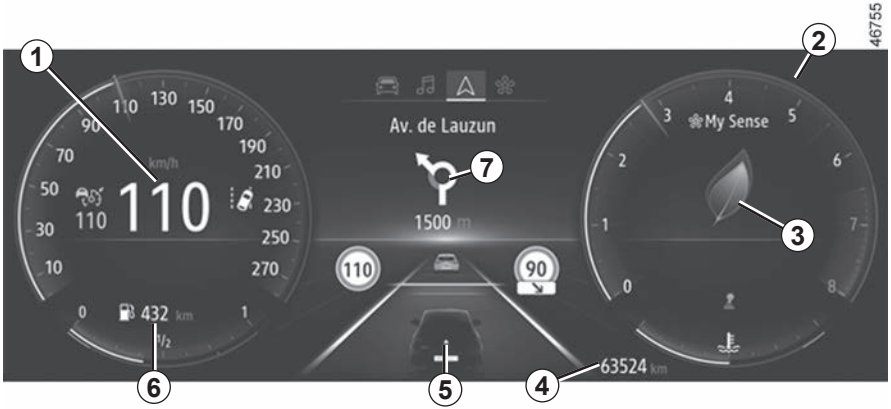

Instrument panel *A*

It lights up when the ignition is switched on. In some cases, the appearance of a warning light is accompanied by a message.
Depending on the vehicle, you can customise your instrument panel with the content and colours of your choice.
For vehicles fitted with a multimedia screen, refer to the equipment instructions.
For vehicles not fitted with a multimedia screen ➥ 1.103.

Speedometer *1*
Depending on the style selected, the display varies.

Rev counter *2* (graduations x 1000)
This is displayed differently according to how the instrument panel is customised. Depending on the style selected, it may not be displayed.

Overspeed buzzer
Depending on the vehicle and country, the warning light is displayed and a beep sounds. This beep sounds as soon as the vehicle is travelling at over 75 mph (120 km/h). This warning light remains lit for as long as the vehicle is travelling at over 74 mph (120 km/h).

Driving style indicator *3* ➥ 2.29

Total mileage recorder *4* ➥ 1.95

Trip computer *5* ➥ 1.91

Estimated mileage with remaining fuel *6*
The value is displayed after driving 400 metres. ➥ 1.95.

Trip computer and multimedia information *7*
Depending on the vehicle, you can display information from the multimedia screen (the compass, telephone, navigation, etc.) or information from the trip computer.
Please refer to the multimedia instructions for more information.

Coolant temperature indicator *9*

In normal use, indicator ***9*** should be before area ***8***.

Under “intensive” operating conditions, the needle may approach this zone.

This is not serious unless the warning light STOP comes on accompanied by a message on the instrument panel and a beep.

Fuel gauge *10*

If the level is at the minimum, warning light integrated in the indicator comes on orange, accompanied by a beep.

Fill up as soon as possible.

Instrument panel *B*

It lights up when the ignition is switched on.

In some cases, the appearance of a warning light is accompanied by a message.

Depending on the vehicle, you can customise your instrument panel with the content and colours of your choice.

For vehicles fitted with a multimedia screen, refer to the equipment instructions.

For vehicles not fitted with a multimedia screen ➥ 1.103.

Overspeed buzzer
Depending on the vehicle and country, the warning light is displayed and a beep sounds. This beep sounds as soon as the vehicle is travelling at over 75 mph (120 km/h). This warning light remains lit for as long as the vehicle is travelling at over 74 mph (120 km/h).

Speedometer *11*
Depending on the style selected, the display varies.

Driving style indicator *12* ➥ 2.29.

Coolant temperature indicator *14*
In normal use, indicator ***14*** should be before area ***13***.

Under “intensive” operating conditions, the needle may approach this zone. This is not serious unless the warning light STOP comes on accompanied by a message on the instrument panel and a beep.

Rev counter *15*
(graduations x 1000)
This is displayed differently according to how the instrument panel is customised. Depending on the style selected, it may not be displayed.

Driving mode selected *16* ➥ 3.2

Total mileage recorder *17* ➥ 1.95

Trip computer zone *18* ➥ 1.91

Multimedia information *19*

Depending on the vehicle, you can display information from the multimedia screen (the compass, telephone, navigation, etc.).

Please refer to the multimedia instructions for more information.

Estimated mileage with remaining fuel *20*

The value is displayed after driving 400 metres ➥ 1.95.

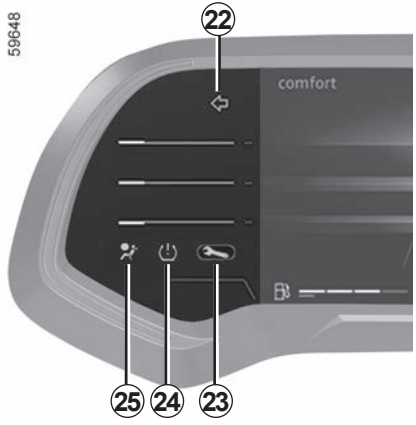

Fuel gauge *21*

If the level is at the minimum, the warning light integrated into the indicator appears in orange, accompanied by a beep.

Fill up as soon as possible.

Direction indicators *22*

Warning light *23* ➥ 1.78

Tyre under-inflation warning light *24* ➥ 2.40

Airbag warning light *25* ➥ 1.42

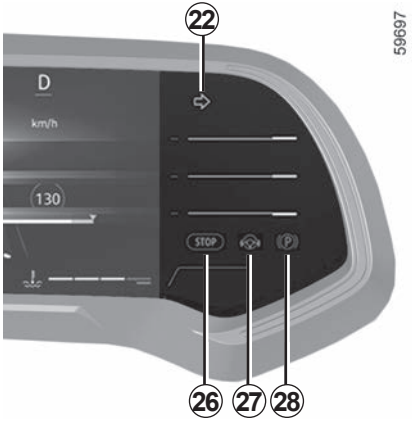

Urgent stop warning light *26* ➥ 1.78

Hands off steering wheel warning light *27* ➥ 2.56 ➥ 2.117

Parking brake or Electronic parking brake warning light *28* ➥ 2.23 ➥ 2.24

E-Tech hybrid version

Instrument panel *B*

It lights up when the ignition is switched on.

In some cases, the appearance of a warning light is accompanied by a message.

"230 V" traction battery level remaining *29*

Traction battery level low

In the event of extreme use at low speed, the traction battery charge level may reach a low level.

The ***30*** warning light is displayed in yellow to warn you.

The electric engine performance will be limited to ensure that the E-Tech hybrid system operates correctly, until the battery charge level reaches a sufficient level.

Opt for a smoother driving style or, if possible, stop the vehicle without switching off the ignition until the ***30*** warning light appears in blue once again.

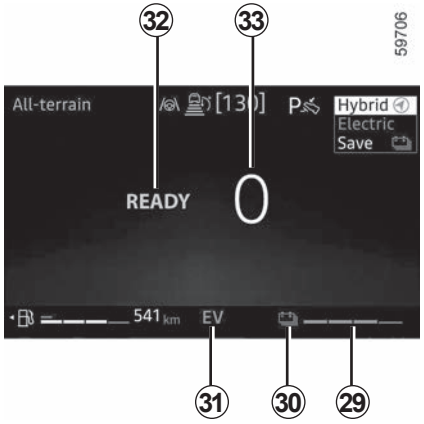

Immobilisation threshold imminent

In the event of extreme and prolonged use of the vehicle (e.g. towing or driving in steep off-road conditions) at speeds below 6 mph (10 km/h), the charge level may reach the threshold for imminent immobilisation.

A beep sounds and the warning light appears in red.

If the charge level continues to drop, the electric range value will no longer be displayed.

If possible, stop the vehicle when traffic conditions allow it.

Leave the combustion engine on until the warning lights disappear.

This must be done to recharge the traction battery.

Electric operating mode warning light *31*

It is displayed when only the traction battery is powering movement of the vehicle.

Message indicating vehicle ready for driving *32*

The message READY appears when the ignition is switched-on and disappears when the vehicle speed exceeds 3 mph (5 km/h).

Speedometer *33*

Depending on the style selected, the display varies.

Energy flow indicator *34* ➥ 1.6

Charge meter *35* ➥ 2.29

Driving mode selected *36* ➥ 3.2

Trip computer zone or Multimedia information zone *37*

Estimated mileage with remaining fuel *38*

The value is displayed after driving 400 metres ➥ 1.95.

Fuel gauge *39*

If the level is at the minimum, warning light integrated in the indicator comes on orange, accompanied by a beep.

Whatever the remaining battery level, fill the tank as soon as possible.

If the vehicle runs completely out of fuel, fill the tank with at least 1.76 gal (8 litres) of fuel.

Otherwise the hybrid mode will remain unavailable.

Combustion engine temperature display *41*

Press the ***43*** switch to access the “Vehicle” world ***40***, then press the ***3*** or ***4*** switch until ***41*** is displayed.

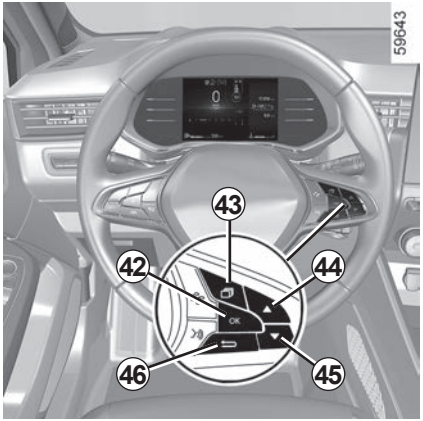

Engine oil level low warning

When the engine is started, the instrument panel display alerts you if the minimum oil level is reached. ➥ 4.4.

The first time the warning appears, it can be cleared by pressing switch ***42*** "**OK**".

Subsequent warnings will disappear automatically after around 30 seconds.

Instrument panel in miles

(option to switch to km/h)

Vehicles not fitted with a multimedia screen

– With the ignition off, press the ***43*** switch as many times as required to reach the "Settings" world ***47***;

– press the ***44*** or ***45*** control repeatedly to reach the "Vehicle setting", then press the ***42*** "**OK**" switch;

– press the ***44*** or ***45*** control repeatedly to reach the "DASHBOARD", then press the ***42*** "**OK**" switch;

– press the ***44*** or ***45*** control repeatedly to reach "Unit: km/h" (or "Unit: mph" if required), then press the ***42*** "**OK**" switch;

– press the ***46*** switch to return to the previous menu.

Vehicles fitted with a multimedia screen.

Please see the multimedia instructions for information on how to select the unit.

Note: in both cases, once the battery is switched off, the on-board computer automatically returns to the original unit of measurement.

To return to the previous mode, repeat the same operation.

Please refer to the multimedia instructions for more information.

Trip computer and warning system *A* or *B*

Depending on the vehicle, this includes the following functions:

- distance travelled;
- journey settings;
- information messages;
- operating fault messages (connected to the warning light);
- warning messages (connected to the STOP warning light);
- vehicle settings customisation menu ➥ 1.103.

All these functions are described on the following pages.

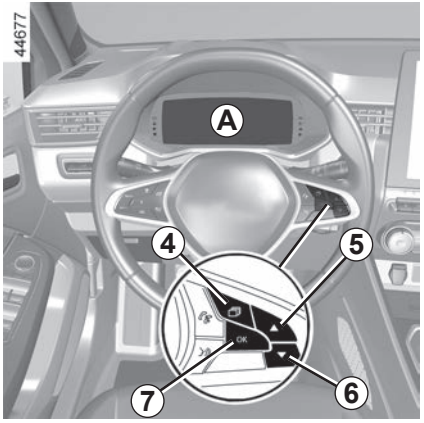

Vehicle fitted with trip computer *A*

The functions will be distributed in zones ***1***, ***2*** and ***3***.

The location of the zones differs depending on the style selected.

The ***3*** area is dedicated to driving aids and cannot be customised.

Press the ***4*** switch to browse between areas ***1*** and ***2***, then select the functions by pressing the ***5*** or ***6*** switches repeatedly.

TRIP COMPUTER: general information (3/4)

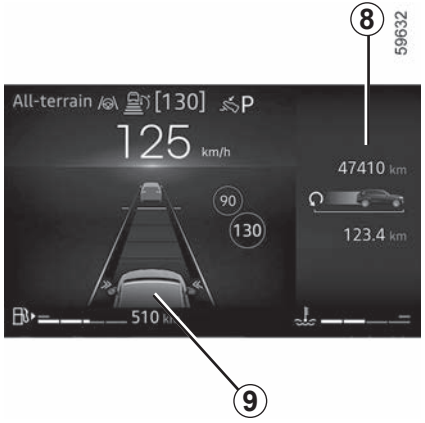

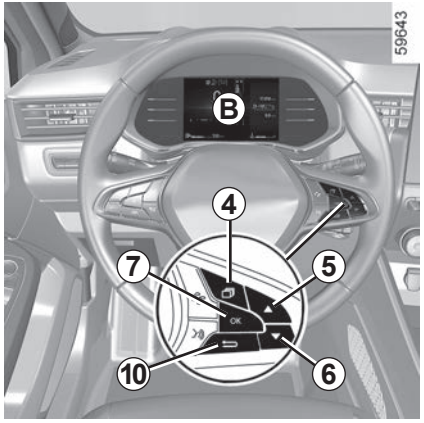

Vehicle fitted with trip computer *B*

The functions are shown in menus ***8*** and ***9***.

Press the ***4*** switch to browse between the zones and select the functions by repeatedly pressing the ***5*** or ***6*** switches.

Press the switch ***10*** to return to the previous menu.

Selections

(the display depends on the vehicle equipment and country)

a) Trip log, operating faults and information message readout;

b) Journey settings:

– average fuel consumption;

– current fuel consumption;

– estimated range with remaining fuel;

– distance travelled;

– average speed;

– LPG average fuel consumption;

– estimated range with remaining LPG fuel;

– LPG range;

c) trip mileage recorder and average speed;

d) Reset the tyre pressure;

e) set the time;

f) distance before service;
  – distance before service;
  – mileage before oil change.

g) Estimated range with remaining reagent.

Resetting the trip mileage recorder and journey parameters (reset button)

Select one of the trip settings, then press and hold the **7** "**OK**" switch until the display is reset to zero.

Automatic resetting of the journey parameters

Resetting occurs automatically when the maximum value of any of the parameters is exceeded.

Interpreting some of the values displayed after resetting

The values showing average fuel consumption, range and average speed will become more stable and reliable the further you travel after pressing the reset button.

For the first few miles after pressing the reset key you will notice that the range increases as you travel.

This range takes into account the average fuel consumption since the last time the reset button was pressed.

However, average consumption can decrease when:

– the vehicle stops accelerating;

– the engine reaches its operating temperature (if the engine was cold when the reset key was pressed);

– when driving from an urban area onto the open road.

TRIP COMPUTER: journey parameters (1/5)

The display of information shown below DEPENDS ON THE VEHICLE EQUIPMENT AND COUNTRY.

Examples of selections	Interpreting the display selected
Vehicle Systems OK	**a) Trip log.** Successive display: – information messages (passenger airbag OFF etc.); – operating fault messages (“Check injection”, etc.).
7.4 L/100	**b) Current fuel consumption.** This value is displayed after a speed of approximately 20 mph (30 km/h) is reached.
5.8 L/100	**Average fuel consumption** since the last reset. The value is displayed after having travelled at least 400 metres since the last reset.
112,4 km	**c) Trip mileage recorder: distance travelled** since the last reset.
123.4 km/h	**Average speed** since the last reset. The value is displayed after driving 400 metres.

TRIP COMPUTER: journey parameters (2/5)

The display of information shown below DEPENDS ON THE VEHICLE EQUIPMENT AND COUNTRY.

Examples of selections	Interpreting the display selected
Average LPG –-.- L/100	**d) Average LPG fuel consumption**
Range LPG –-- km	**Estimated range with remaining LPG fuel**.
Distance LPG –-- km	**Distance travelled on LPG fuel since the last reset**.
55.8 mph (90 km/h)	**e) Current speed** (depending on the vehicle).

TRIP COMPUTER: journey parameters (3/5)

The display of information shown below DEPENDS ON THE VEHICLE EQUIPMENT AND COUNTRY.

Examples of selections	Interpreting the display selected
Tyre pressure init. long press	**f) Reset the tyre pressure.** ➥ 2.40
16:30	**g) Setting the time.** ➥ 1.106

TRIP COMPUTER: journey parameters (4/5)

The display of information shown below DEPENDS ON THE VEHICLE EQUIPMENT AND COUNTRY.

Examples of selections On-board computer with mileage-before-service message	Interpreting the display selected
Service in 30 000 km / 12 months Service due in 300 km / 24 days Service Required	**f) Mileage before service or oil change.** **Mileage before service** **With the ignition on and engine not running**, access the “Mileage before service” information. When the distance value approaches its limit, there are several possible scenarios: – If the range is less than **930 miles (1,500 km)** or **one month:** the message “Service due” is displayed accompanied by the nearest term (distance or time); – range equal to **0 miles (0 km)** or **date of service reached:** the message “Service Required” is displayed accompanied by the warning light . The vehicle requires a service as soon as possible.

Reset: to reset the distance before the next service, press and hold button OK for approximately 10 seconds until the display shows the mileage before service permanently.

Note: If a service is performed without changing the engine oil, only the mileage before the next service should be reset. In the event of an oil change, both the distance before the next service and the next oil change should be reset.

TRIP COMPUTER: journey parameters (5/5)

The display of information shown below DEPENDS ON THE VEHICLE EQUIPMENT AND COUNTRY.

Examples of selections On-board computer with distance before next service message (cntd.)	Interpreting the display selected
Oil change in 30 000 km / 24 months	**f) Mileage before service or oil change.** **Mileage before service** **With the ignition on and the engine not running**, access the mileage information to display the mileage before the next oil change.
Depending on the vehicle, the mileage before an oil change varies according to the driving style (frequent driving at low speed, door-to-door journeys, extensive use at idling speed, towing a trailer, etc.). The distance remaining until the next oil change can therefore decrease more quickly in some cases than the actual distance travelled. **Reset**: to reset the distance before the next service, press and hold button OK for approximately 10 seconds until the display shows the mileage before oil change permanently. **Note**: If a service is performed without changing the engine oil, only the mileage before the next service should be reset. In the event of an oil change, both the distance before the next service and the next oil change should be reset.	
Top Up AdBlue before 2400 km	**g) Estimated range with remaining reagent.**

TRIP COMPUTER AND WARNING SYSTEM: information messages

These can help in the vehicle starting phase, or give information about a selection or a driving status.
Examples of information messages are given in the following pages.

Examples of messages	Interpreting the display selected
“Parking Brake ON”	Indicates that the parking brake has been applied.
“Turn Steering Wheel + START”	Turn the steering wheel slightly whilst pressing the vehicle start button to unlock the steering column.
“Vehicle Checks in Progress”	Displayed with the ignition on when the vehicle is running self-diagnostics.

TRIP COMPUTER AND WARNING SYSTEM: operating fault messages

These appear with the warning light and mean that you should drive very carefully to an authorised dealer as soon as possible. If you fail to follow this recommendation, you risk damaging your vehicle.
They disappear when the display selection key is pressed or after several seconds and are stored in the computer log. The warning light stays on. Examples of operating fault messages are given in the following pages.

Examples of messages	Interpreting the display selected
“Clean Diesel Filter”	Indicates the presence of water in the diesel filter; contact an approved Dealer as soon as possible.
“Check vehicle”	Indicates a fault in one of the pedal sensors, battery management system or oil level sensor.
“WARNING: Check Airbag”	Indicates a fault in the restraint system in addition to the seat belts. In the event of an accident, it is possible that they may not be triggered.
“Check Anti- Pollution System”	– Indicates a fault in the vehicle’s particle filter system. – Indicates a fault in the emissions reduction system when it is accompanied by the warning light. ➥ 1.132.
“Check Electric System”	Indicates a fault in the traction system.

TRIP COMPUTER AND WARNING SYSTEM: warning message

These appear with the STOP warning light and require you to stop immediately, for your own safety, as soon as traffic conditions allow. Stop your engine and do not restart it. Contact an approved Dealer.

Some examples of warning messages are given below.

Note: the messages appear on the display either individually or alternately (when there are several messages to be displayed), and may be accompanied by a warning light and/or a beep.

Examples of messages	Interpreting the display selected
“WARNING: Engine Failure Risk”	Indicates an injection fault, the vehicle’s engine has overheated or there is a serious engine fault.
“WARNING: Braking System”	Indicates a fault in the braking system.
“WARNING: Electric System”	Indicates a fault in the vehicle battery charging circuit (alternator etc.).
“Puncture”	Indicates that at least one wheel is punctured or severely underinflated.
“WARNING: Steering Fault”	Indicates a problem with the steering.
“Electric motor failure”	Indicates that the vehicle is losing power.
“WARNING: Electric System”	Indicates a fault in the electric system.

VEHICLE SETTINGS CUSTOMISATION MENU (1/3)

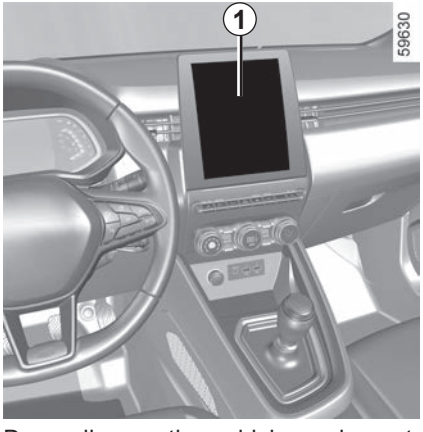

Depending on the vehicle equipment, this function allows you to activate/deactivate and adjust some of the vehicle's functions.

Vehicles fitted with a multimedia screen *1*

Access the settings menu

Refer to the multimedia instructions for information on accessing the various settings.

Select a menu then the function to be modified (the display depends on the vehicle equipment and country):

a) "Driving":

- Indicator volume;
- Free-wheel;
- ...

b) "Access":

- Unlocking the driver's door;
- Lock doors during driving;
- Opening/closing in hands-free mode;
- Remote locking/Approach unlocking;
- Distance locking sound;
- Silent mode;
- Automatic locking;

c) "Wiping and lighting":

- Follow-me-home lighting;
- Wiping in reverse;
- Automatic front wiping;
- Wiping after washing;

d) "Welcome":

- External welcome;
- Automatic fold-out of mirrors;
- Interior welcome;
- Courtesy light auto mode.

Depending on the function, select:

- "ON" or "OFF" to activate or deactivate,

or

- a duration to adjust the time the lights are switched on (e.g. for the "Follow-me-home lighting" function).

Please refer to the multimedia instructions for further information.

For safety reasons, carry out any adjustments when the vehicle is not being driven.

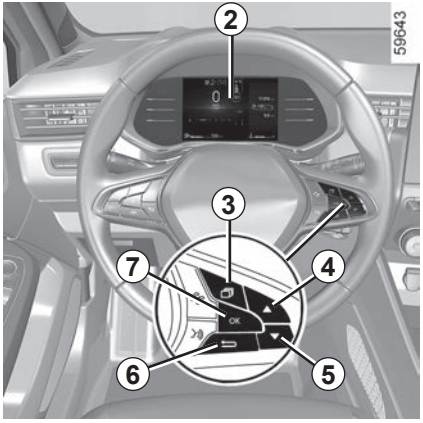

Vehicles not fitted with a multimedia screen

Accessing the settings menu on the display *2*

Press the switch***3*** as many times as required to reach the “Settings” world, then press ***7*** “**OK**” to confirm.

Press the control ***4*** or ***5*** repeatedly to reach the “Vehicle setting” menu, then press “**OK**” to confirm.

Use the ***4*** or ***5*** control to select the function to modify, then confirm by pressing “**OK**” (the display may vary according to the vehicle equipment and the country):

“DASHBOARD”:
- Language;
- Unit;
- Style;
- Colour.

“VEHICLE”:
- Rear windscreen wiping in reverse gear;
- Automatic windscreen wiping;
- Wiping after washing;
- Free-wheel in ECO mode;
- Indicator volume;
- Exterior welcome.

“PARKING ASSIST”:
- Front;
- Rear;
- Side;
- Beep volume.

“DRIVING ASSIST”:
- Lane departure warning sound volume;
- Lane departure warning sensitivity;
- Lane departure warning vibration;
- Lane keeping assist sensitivity;
- Blind spot warning;
- Active braking;
- Overspeed warning;
- Fatigue warning;
- Distance warning.

“LIGHTING”:
- Courtesy light auto mode;
- Automatic follow-me-home lighting;
- Follow-me-home lighting: XX seconds;
- ...

“ACCESS”:
- Lock doors during driving;
- Hands-free opening/closing;
- Unlocking the driver’s door only;
- Automatic re-locking;
- Unlocking when approaching;
- Locking when moving away;
- Silent locking;
- Automatic opening/closing;
- Automatic deployment of door mirrors;
- ...

“RESET”.

☑ function activated;

☐ function deactivated.

Press the ***6*** switch to return to the previous menu.

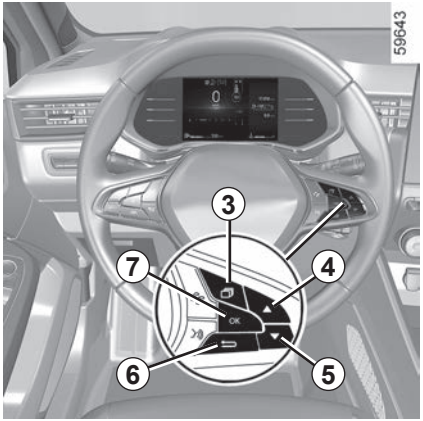

If you select either “PARKING ASSIST” or “DASHBOARD”, you will have to make a further selection (sound volume of the parking distance control or instrument panel language).

In this case, make your selection and confirm it by pressing ***7*** “**OK**”, the selected value is shown by a ☑ in front of the line.

To exit the menu, press the ***6*** switch.

It may be necessary to carry out this operation more than once.

The vehicle settings personalisation menu cannot be used when driving.

At a speed exceeding 12 mph (20 km/h), the instrument panel display switches automatically back to trip computer and warning system mode.

CLOCK AND EXTERIOR TEMPERATURE (1/2)

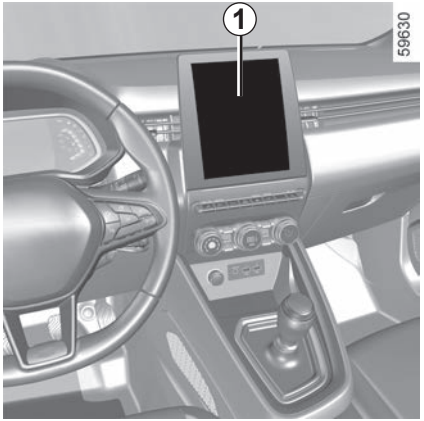

Vehicles fitted with a multimedia screen

The time and exterior temperature are displayed on the multimedia screen ***1***.

Refer to the multimedia instructions.

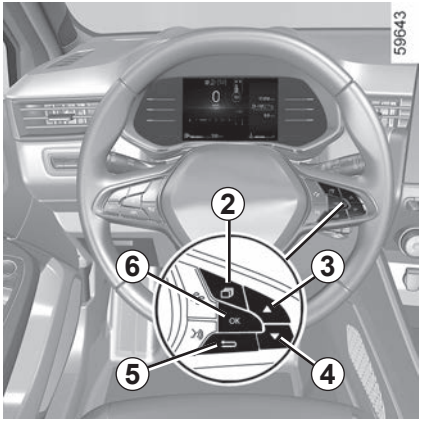

Vehicles not fitted with a multimedia screen

Press the switch ***2*** as many times as required to reach the “Settings” world.

Press the control ***3*** or ***4*** repeatedly to reach the “Time setting” menu, then press ***6*** “**OK**”.

Press and hold the ***6*** “**OK**” switch until the time flashes.

Set the time using the control ***3*** or ***4***, press ***6*** “**OK**” to confirm, then set the minutes using the control ***3*** or ***4***, then press ***6*** “**OK**” to confirm.

Press the switch ***5*** to return to the previous menu.

Depending on the vehicle, If the electrical supply is cut (battery disconnected, broken supply wire, etc.), the clock will automatically go back to the right time after a few minutes once the system is capable of receiving information GPS.

External temperature indicator

Special note:

When the external temperature is between -3°C and +3°C, the **°C** symbols flash (indicates risk of ice).

External temperature indicator

As ice formation is related to climatic exposure, local air humidity and temperature, the external temperature alone is not sufficient to detect ice.

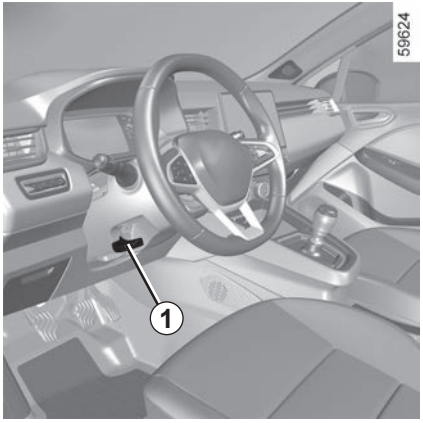

Adjusting the steering wheel height and depth

Lower the lever ***1*** and position the steering wheel in the required position.

Then, raise the lever fully, beyond the point of resistance to lock the steering wheel.

Make sure that the steering wheel is correctly locked.

For safety reasons, only adjust the steering wheel when the vehicle is stationary.

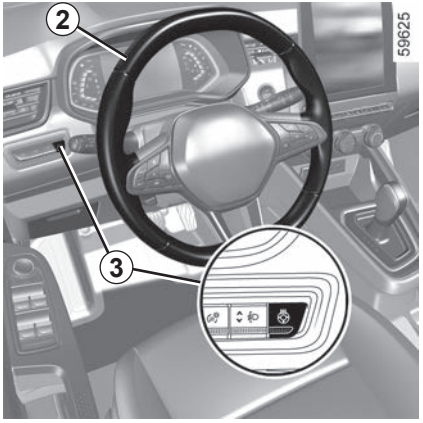

Steering wheel heating

(depending on vehicle)

This function heats the steering wheel ***2***.

Operating principle

When the temperature is reached, the function regulates the temperature of the heated areas for approximately 30 minutes and then switches off automatically.

Activating the function

With the ignition on, press the ***3*** switch: the switch warning light illuminates.

Deactivating the function

– Automatic:

The function switches off automatically after the regulation phase of approximately 30 minutes.

The ***3*** switch warning light remains on.

Note: if the function has switched off automatically, press the switch ***3*** twice to reactivate it.

If switch ***3*** is not pressed again, the function will be reactivated the next time the ignition is switched on.

– Manually:

To deactivate the function during the regulation phase, press the switch ***3***.

The ***3*** switch warning light goes out.

Power-assisted steering

Never drive with an inadequately charged battery.

Variable power-assisted steering

The variable power assisted steering system is equipped with an electronic control system which alters the level of assistance to suit the vehicle speed.

Steering is made easier during parking manoeuvres (for added comfort) while the force needed to steer increases progressively as the speed rises (for enhanced safety at high speeds).

Special feature of Stop and Start

With the engine on standby, power-assisted steering is no longer operational.

In this case, it returns to its original state when the engine is restarted or when the speed exceeds 1 mph (1 km/h) (hill, slope etc.).

Note: the power-assisted steering depends on the mode selected in the “MULTI-SENSE” menu ➥ 3.2.

Never leave the steering wheel on full lock when the vehicle is stationary.

With the engine switched off, or if there is a system fault, it is still possible to turn the steering wheel.

The force required will be greater.

Never turn the steering wheel when the vehicle battery is disconnected.

Never switch off the ignition when travelling downhill, and avoid doing so in normal driving (assistance is not provided).

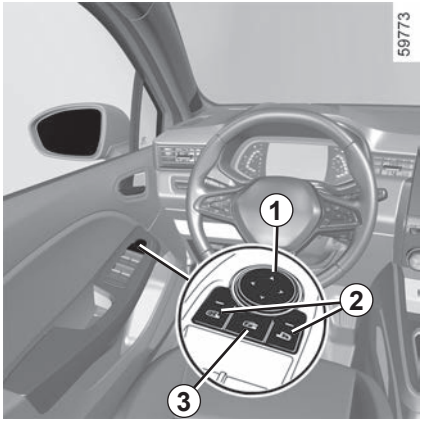

Door mirrors

Adjustment

When you select the door mirror using the ***2*** switch, the built-in warning light on the switch will appear.

Then use the ***1*** button to adjust it to the desired position.

Heated door mirrors

Mirror de-icing is carried out at the same time as rear screen de-icing ➥ 3.6 ➥ 3.12.

Electrical folding mirrors

The door mirrors will fold-out automatically when the vehicle is unlocked.

The door mirrors fold in when the vehicle is locked.

Note: you can deactivate/activate the door mirror folding mechanism ➥ 1.103.

You can force folding by pressing the ***3*** switch.

In this situation, the door mirrors will remain folded until the ***3*** button is pressed again, regardless of automatic folding.

Special case

When the rear view mirror has been manually deployed or folded back, it is possible to reset it to a usage position.

To do this, press the ***3*** switch.

A mechanical noise from the rear view mirror unit will be heard.

If a tapping noise cannot be heard, press once again on ***3*** switch until the tapping noise can be heard from the door mirror.

For safety reasons, carry out any adjustments when the vehicle is not being driven.

Objects observed in the rear view mirror glass are actually closer than they appear.

For your safety, take this into account in order to correctly assess the distance before any manoeuvre.

Interior rear view mirror

Its position can be adjusted.

Rear view mirror with lever *4*

When driving at night, to avoid being dazzled by the headlights of the vehicle behind, depress the little lever located behind rear view mirror ***4***.

Rear view mirror without lever *4*

The rear view mirror automatically darkens when you are being followed by a vehicle using main beam headlights or in very bright lighting.

For safety reasons, carry out any adjustments when the vehicle is not being driven.

Objects observed in the rear view mirror glass are actually closer than they appear.

For your safety, take this into account in order to correctly assess the distance before any manoeuvre.

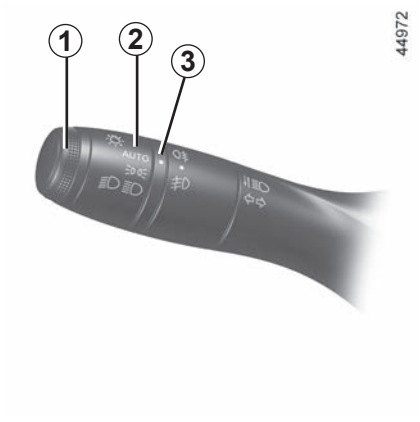

Side lights

Turn ring ***2*** until the symbol is opposite mark ***3***.

This indicator light on the instrument panel comes on.

Daytime running lights function

The daytime running lights come on automatically with no action on stalk ***1*** when the engine is started, and they go off once the engine is switched off.

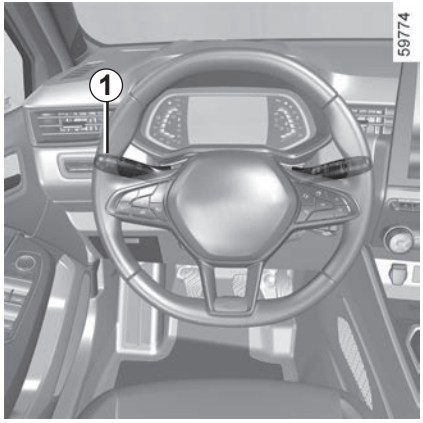

Dipped beam headlights

Manual operation

Turn ring ***2*** until the symbol is opposite mark ***3***. This indicator light on the instrument panel comes on.

Automatic operation
(depending on the vehicle)

Turn ring ***2*** until the **AUTO** symbol is opposite mark ***3***: with the engine running, the dipped beam headlights switch on or off automatically depending on the brightness of the light outside, without any action on stalk ***1***.

Depending on the vehicle, the dipped beam headlights come on automatically after several sweeps of the windscreen wiper blades.

Before driving at night, check that the electrical equipment is operating correctly and adjust the headlight beams (if your vehicle is not carrying its normal load) ➥ 1.119.

As a general precaution, check that the lights are not obscured (by dirt, mud, snow or objects being transported).

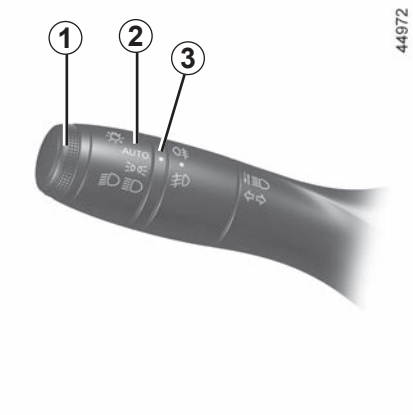

Main beam headlights

With the engine running and the dipped beam headlights lit, push stalk ***1***. This indicator light on the instrument panel comes on.
To return to the dipped headlight position, pull the stalk ***1*** towards you again.

“Raise lights during driving” function

When the main beam headlights are activated, the “Raise lights during driving” function improves driver visibility by automatically raising the dipped beam headlight and the main beam headlights.

During deactivation of the main beam headlights, the dipped beam headlights return to their original position.

Automatic main beam headlights

Depending on the vehicle, this system switches the main beam headlights on and off automatically.

It uses a camera located behind the interior rear view mirror to detect vehicles that are being followed and those coming in the opposite direction.

The system may encounter difficulties under certain conditions, including**:**

– extreme weather conditions (rain, snow, fog, etc.);
– obstruction in front of the windscreen or camera;
– when a following or oncoming vehicle has weak or hidden lighting;
– incorrect settings for the front headlights;
– reflective systems;
– ...

The main beam headlights come on automatically if:

– exterior light is weak;
– no other vehicles or lighting are detected;
– the vehicle speed is above approximately 25 mph (40 km/h).

If any of the above conditions are not fulfilled, the system switches to dipped beam headlights.

Note: make sure the windscreen is not obscured (dirt, mud, snow, condensation etc.).

To activate automatic main beam headlights:

Turn ring ***2*** until the **AUTO** symbol is opposite mark ***3*** and push the stalk ***1***.

Warning light comes on the instrument panel.

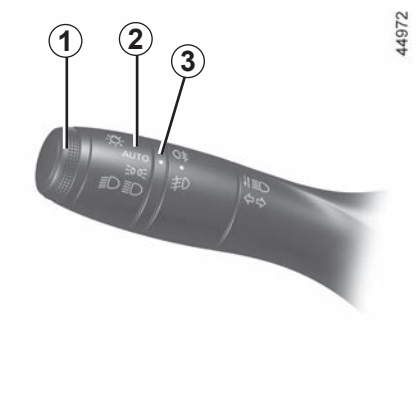

Automatic main beam headlights (continued)

To deactivate automatic main beam headlights:

– turn ring ***2*** to a position other than **AUTO**;

or

– pull the stalk ***1***.

Warning light goes out on the instrument panel.

Note: the main beam headlights will be activated upon deactivation of the automatic main beam headlights function.

Operating faults

When the message “Check Automatic Lighting” appears on the instrument panel, the system is deactivated.

Consult an approved dealer.

Using the portable navigation system at night in the windscreen area below the camera may disturb the operation of the “automatic main beam headlights” system (risk of reflection on the windscreen).

The “automatic main beam headlights” system should under no circumstances be used to replace driver attention and responsibility with regard to vehicle lighting and adapting to light, visibility and traffic conditions.

Switching off the lights

The lights will go out automatically when the engine is switched off, the driver's door is opened or the vehicle is locked.

In this case, the next time the engine is started the lights will be switched back on according to the position of the ring **2**.

Note: if the fog lights are lit, the lights are not switched off automatically.

Lights-on reminder buzzer

If the lights are on after the engine is switched off, a warning beep sounds when the driver's door is opened to warn you that the lights are still on (to avoid battery discharge or other problems).

Operating faults

If the "Check lighting" message appears with the warning light and the warning light flashes on the instrument panel, this indicates a lighting fault.

Consult an authorised dealer.

Welcome and goodbye function

(depending on the vehicle)

Once the function is activated, the daytime running lights and the rear side lights will light up automatically upon detection of the card or when the vehicle is unlocked.

They switch off automatically:

– approximately one minute after lighting up;

– when starting the engine based on the position of the lighting stalk;

or

– upon locking the vehicle.

Activating/deactivating the function

To activate or deactivate the external welcome function, please see the multimedia instructions.

Select "ON" or "OFF".

“See-me-home lighting” function

This function enables you to briefly switch on the side lights and dipped beam headlights (e.g. to provide light when opening a gate).

With the engine stopped and the lights switched off, the ***2*** ring in **AUTO**, pull the lever ***1*** towards you: the side lights and dipped beam headlights will switch on for approximately 30 seconds along with the and warning lights on the instrument panel.

To increase this duration, you may pull the stalk up to four times (total time restricted to approximately two minutes).

On the instrument panel, the message “lighting on _ _ _” followed by the remaining time will appear as confirmation.

You can then lock your vehicle.

To switch off the lights before they go out automatically, turn ring ***2*** to any position, then return it to position **AUTO**.

Rear fog lights

Turn centre ring ***4*** on the stalk until the symbol faces mark ***3***, then release it.

Operation of the fog lights depends on the exterior lighting selected, and an indicator light will light up on the instrument panel.

Do not forget to switch off the fog lights when they are no longer needed, to avoid inconveniencing other road users.

Switching off the lights

Turn the centre ring ***4*** again until mark ***3*** is opposite the symbol for the fog lights that you wish to switch off.

The corresponding indicator light on the instrument panel goes out.

The front and rear fog lights switch off when the exterior lights are switched off.

When driving in fog or snow, or when transporting objects which are higher than the roof, the headlights do not come on automatically.

Switching on the fog lights remains the responsibility of the driver: the indicator lights on the instrument panel inform you whether the fog lights are lit (indicator light on) or not (indicator light not on).

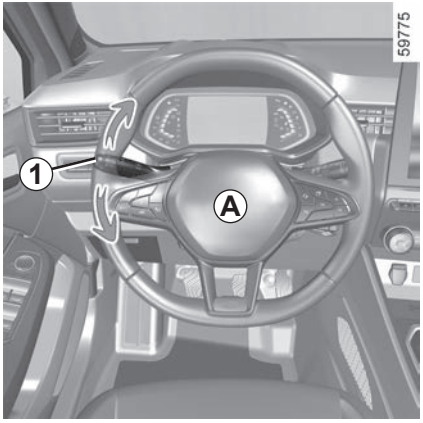

Horn

Press the steering wheel boss ***A*** to activate the horn.

Headlight flasher

Pull stalk ***1*** towards you then release it to flash the headlights.

Direction indicators

Move the stalk ***1*** in the same direction as you want to move the steering wheel.

One-touch mode

Briefly shift the stalk ***1*** upwards or downwards, not exceeding the point of resistance, then release it: the stalk will return to its original position and the direction indicator light concerned will flash three times.

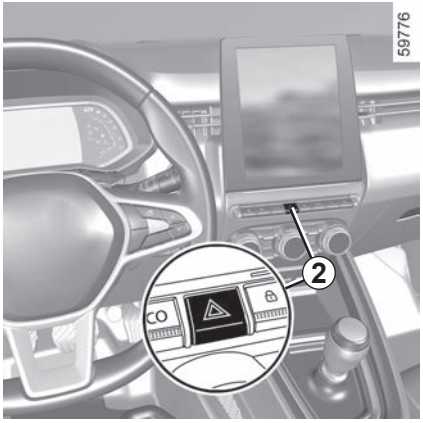

Hazard warning lights

Press switch ***2***.

This switch activates all four direction indicators and the side indicator lights simultaneously.

It must only be used in an emergency to warn drivers of other vehicles that you have had to stop in an area where stopping is prohibited or unexpected, or that you are obliged to drive under special conditions.

HEADLIGHT BEAM ADJUSTMENT

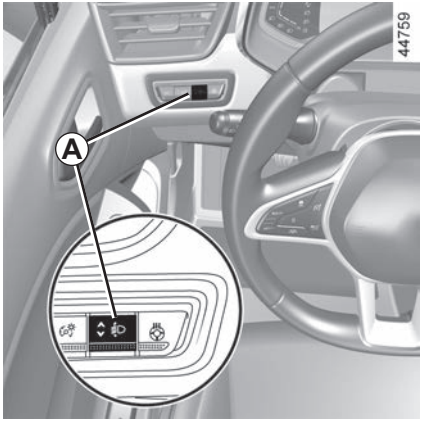

Switch ***A*** is used to adjust the height of the headlight beams according to the load.

With the dipped beam headlights lit, press or lift switch ***A*** as many times as is necessary to select the required position on the instrument panel.

The position selected is displayed on the instrument panel for approximately 30 seconds.

Note: depending on the vehicle, each time the ignition is switched on, the position selected is displayed on the instrument panel for approximately 30 seconds and for approximately 5 seconds each time switch ***A*** is pressed.

	Examples of positions for adjusting control *A* according to the load
Driver alone or with front passenger	0
All seats occupied	1 or 2
Driver with passengers and luggage (or load) reaching the maximum permissible all-up weight	2 or 3
Driver without passengers and luggage (or load) reaching the maximum permissible all-up weight	4

The table below gives some examples. In all cases, adjust control ***A*** according to the vehicle load so that the road can be seen and other drivers are not dazzled.

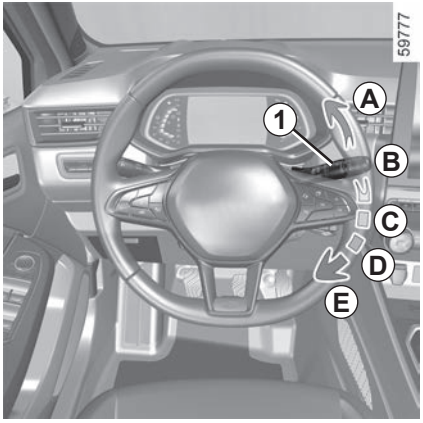

Vehicle fitted with intermittent windscreen wipers

A **single sweep**
A short push will trigger one sweep of the wipers.

B **stop**

C **intermittent wiping**
The wipers will pause for several seconds between sweeps. It is possible to change the time between sweeps by turning ring ***2***.

D **slow continuous wiping**

E **fast continuous wiping**

Special note

When driving the vehicle, the wiping speed slows down whenever the vehicle stops.

For example, fast wiping speed will slow to normal wiping speed.

As soon as the vehicle moves off, wiping will return to the speed originally selected.

If stalk ***1*** is operated, it overrides and cancels the automatic function.

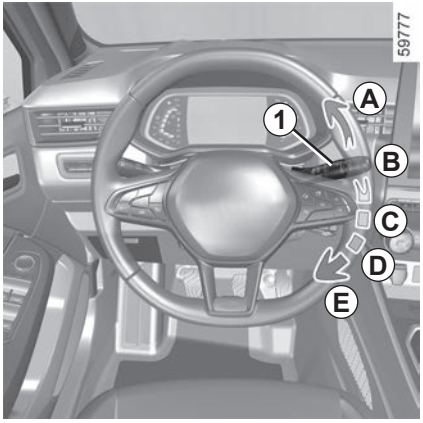

Vehicle fitted with front windscreen wiper rain sensor

The rain sensor is located on the windscreen, in front of the interior rear-view mirror.

A **single sweep**
A short push will trigger one sweep of the wipers.

B **stop**

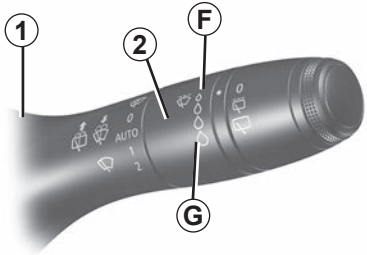

C **automatic wiper function**
When this position is selected, the system detects water on the windscreen and triggers the wipers at a suitable wiping speed. It is possible to change the triggering threshold and the time sweeps by turning ring ***2***:
- ***F***: minimum sensitivity;
- ***G***: maximum sensitivity.

The higher the sensitivity, the quicker the wipers will react and the faster the wipe.

When activating automatic wiping or when increasing sensitivity, one sweep of the blades is performed.

Note:

- the rain sensor is only intended as a driving aid. In the event of reduced visibility, the driver should manually activate the wipers. In foggy weather or during snowfalls, wiping is not automatically triggered and remains under the driver's control;
- in the event of temperatures below zero, automatic wiping is not activated when the vehicle is started. It is automatically activated as soon as the vehicle exceeds a certain speed (approximately 5 mph (8 km/h));
- do not activate automatic wiping in dry weather;
- fully de-ice the windscreen before activating automatic wiping;
- when washing the vehicle under a roller type car wash, return the ring ***1*** to the ***B*** position to deactivate automatic wiping.

Operating faults

In the event of a malfunction of the automatic wiping, the wiper is set to intermittent wiping.

Call an approved Dealer.

The operation of the rain sensor may be interrupted in the event of:

– damaged windscreen wipers; a film of water or traces left by a blade in the sensor's detection zone may increase the response time of the automatic wiper, or increase the wiping frequency;

– a windscreen with any chip or crack level with the sensor, or a windscreen covered in dust, dirt, insects, ice, the use of washing wax and water-repellent chemicals; the windscreen wiper will be less sensitive or may even not react at all.

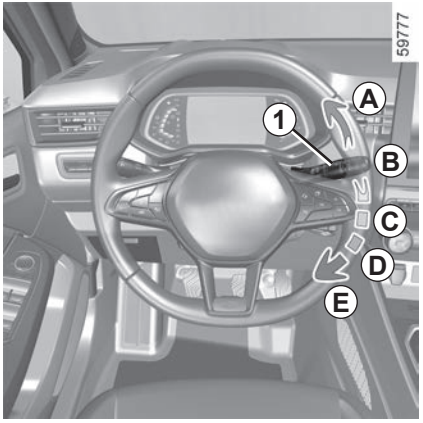

D **slow continuous wiping**

E **fast continuous wiping**

Special note

When driving the vehicle, the wiping speed slows down whenever the vehicle stops.

For example, fast wiping speed will slow to normal wiping speed.

As soon as the vehicle moves off, wiping will return to the speed originally selected.

If stalk ***1*** is operated, it overrides and cancels the automatic function.

Precautions

– In the event of ice, check whether the blades are stuck to the windscreen before operating the wiping mechanism. If you activate the wipers while the blades are stuck down with ice, you may risk damaging both the blade and the wiper motor.

– Do not activate the wipers on a dry screen. This will lead to premature wear or damage to the blades.

Specific front wiper position (service position)

This position enables the blades to be lifted to remove them from the windscreen.

It may be useful to:

– to clean the blades;

– to release the blades from the windscreen in winter;

– replace the blades ➥ 5.38.

With the ignition on or engine started, lift the stalk twice ***1*** to position ***A*** (single sweep).

The blades stop slightly away from the bonnet.

To return the blades to low position, with the ignition on, ensure that the wipers have folded down onto the windscreen, then move the stalk ***1*** to position ***A*** (single sweep).

Before switching on the ignition, place the wipers on the windscreen, there may otherwise be a risk of damage to the bonnet or the wipers when they are switched on.

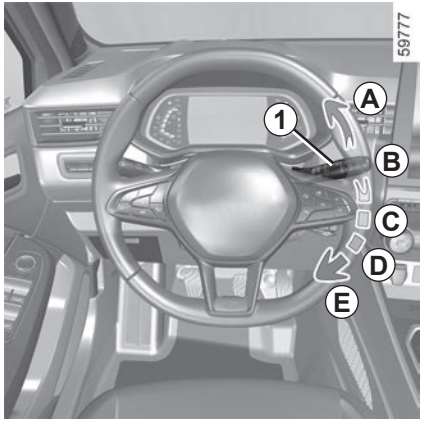

Before carrying out any action involving the windscreen (washing the vehicle, de-icing, cleaning the windscreen etc.) return the ***1*** stalk to position ***B*** (stop).

Risk of injury and/or damage.

In the event of obstacles on the windscreen (dirt, snow, ice etc.), clean the windscreen (including the central area located behind the interior rear view mirror) before starting the wipers (risk of motor overheating).

If an object is preventing a blade from moving, it may stop functioning.

Remove the obstacle and reactivate the wiper using the wiper stalk.

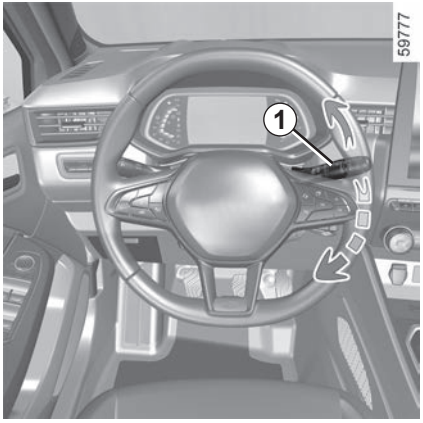

Windscreen washer

With the ignition on, pull stalk ***1*** then release.

A longer pull will trigger, in addition to the windscreen washer, two sweeps of the wipers followed, a few seconds later, by a third.

On vehicles fitted with a multimedia screen, you can choose to activate or disable the third sweep of the blades. ➥ 1.103.

Note: in temperatures below zero, the washer liquid may freeze on the windscreen, reducing visibility. Heat the windscreen using the demister control before cleaning.

When working in the engine compartment, ensure that the windscreen wiper stalk is in position ***B*** (park).

Risk of injury.

Efficiency of a wiper blade

Check the condition of the wiper blades. How long they last depends on you:

– it must remain clean: clean the blade and the screen regularly with soapy water;

– do not use it when the screen is dry;

– free it from the screen when it has not been used for a long time.

In all cases, replace it as soon as it begins to lose efficiency: approximately once a year. ➥ 5.38.

Precaution for using the wipers

– In freezing or snowy weather conditions, clear the screen before starting the wipers (risk of motor overheating);

– ensure that no objects are obstructing the travel of the blade.

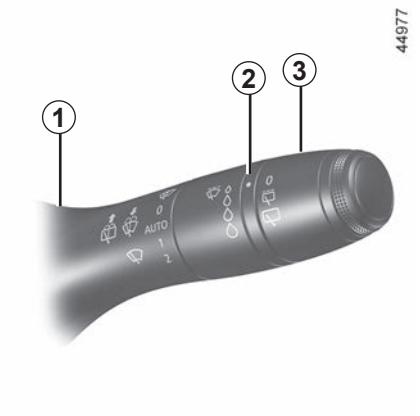

Rear screen wiper

With the ignition on, rotate the ring ***3*** on the lever ***1*** until the symbol is opposite the reference point ***2***.

– **stopping**

– **intermittent wiping**
  The wipers will pause for several seconds between sweeps. Wiping frequency varies with vehicle speed;

– **slow continuous wiping**

To stop the operation, pivot ring ***3*** again.

Note

When washing using a roller type car wash, return the ring ***3*** on the stalk ***1*** to the stop position to deactivate automatic wiping.

Follow usage recommendations.

Do not use the wiper arm to open or close the tailgate.

Before any action involving the rear screen (washing the vehicle, de-icing, cleaning, etc.) return stalk ***1*** to the stop position.

Risk of injury and/or damage.

Efficiency of a wiper blade

Check the condition of the wiper blades. How long they last depends on you:

– it must remain clean: clean the blade and the screen regularly with soapy water;
– do not use it when the screen is dry;
– free it from the screen when it has not been used for a long time.

In all cases, replace it as soon as it begins to lose efficiency: approximately once a year. ➥ 5.38.

Precaution for using the wipers

– In freezing or snowy weather conditions, clear the screen before starting the wipers (risk of motor overheating);
– ensure that no objects are obstructing the travel of the blade.

Activation/deactivation of the rear screen wiper

Engaging reverse gear triggers intermittent wiping (if the front wipers are in operation). If your vehicle is equipped with a vehicle settings customisation menu, you can opt to activate or deactivate this function. ➥ 1.103.

For vehicles not fitted with a settings customisation menu, you can have this function deactivated by an authorised dealer.

In the event of obstacles present on the rear window (dirt, snow, etc.), the wiper will try to sweep away all the obstacles. If an obstacle prevents the blade from moving, it can be stopped. Remove the obstacle, wait for around 30 seconds and reactivate the wiper using the wiper stalk.

Precautions

– In the event of ice, check that the blades are not stuck to the windscreen before operating the wipers. If you activate the wiper while the blade is blocked by ice, you risk damaging both the blade and the wiping motor.

– Do not operate the wipers on a dry screen. This will lead to the premature wear or damage to the blades.

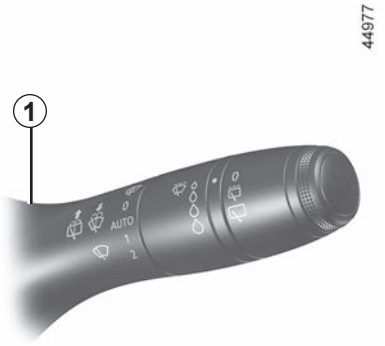

Rear screen wash/wipe

With the ignition on, push and hold stalk ***1***, then release.

Holding the stalk for longer will trigger (in addition to the windscreen washer) two sweeps of the wipers followed, a few seconds later, by a third (drip wiping function).

When the stalk is released, it returns to the rear wipe position.

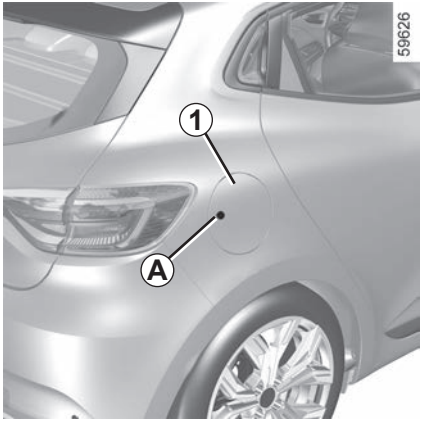

Useable tank capacity:
- Approximately 9.24 gallons (**42 litres**) for the petrol version;
- Approximately 8.58 gallons (**39 litres**) for the diesel version;
- Approximately 10.56 gallons (**48 litres**) for the hybrid version.

With the vehicle unlocked, to open cover ***1***, press area ***A*** then release. The cover ***1*** opens slightly. Use the cap holder ***2*** on the flap ***1*** during filling to hold the cap ***3*** in place.
For details on filling the fuel tank, refer to the information on “Filling up with fuel”. To close it, press on the fuel filler flap by hand, as far as it will go.

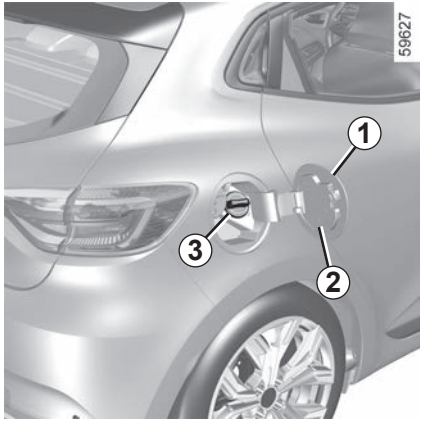

Filler cap: this is specific.

If you have to replace it, make sure it is identical to the original cap.

Contact an approved Dealer.

Never place the cap near a source of heat or flame.

Do not wash the filler area with a high-pressure washer.

Fuel grade

Use a high-grade fuel that complies with the legislation in force in each country and which **must** comply with the specifications given on the label on the cover ***1*** ➥ 6.7.

Fuel types that conform to European standards with which the engines of vehicles sold in Europe are compatible: refer to the table ➥ 6.7.

Do not mix even small amounts of petrol (unleaded or E85) with diesel.

Do not use ethanol-based fuel if your vehicle is not compatible with this fuel.

Do **not** add reagent to the fuel – otherwise you risk damaging the engine ➥ 0.8.

If you wish to add an additive to the fuel, use a product approved by our Technical Department.
Consult an approved dealer.

Diesel version

It is **essential** to use diesel fuel that conforms with the information given on the label inside cover ***1***.

Petrol version

It is **essential** to use unleaded petrol.

The octane rating (RON) must comply with the information given on the label on the cover ***1*** ➥ 6.7.

After filling, check that the cap and cover are closed.

Filling with fuel

With the ignition off, insert the nozzle and insert it **fully** before turning it on to fill the fuel tank (risk of splashing). Keep the nozzle in this position throughout the entire filling operation.

When the pump cuts out automatically at the end of the filling procedure, a maximum of two further filling attempts may be made, as there must be sufficient space in the fuel tank to allow for expansion.

Make sure that no water enters the fuel tank during filling. The cover ***1*** and its surround must remain clean.

Special case

When the vehicle has been stopped for around three months, **you must add fuel to prevent damage to the fuel pump**.

To do this, with the ignition off, top-up at least 1.10 gallons (**5 litres**) then start the engine to operate the pump and renew the fuel in the circuit.

If it is not possible to add at least 1.10 gallons (5 litres) of fuel due to the fuel level in the tank, drive the vehicle until the tank has capacity.

Petrol version

Using leaded petrol will damage the antipollution system and may lead to a loss of warranty.

To ensure that the tank is not filled with leaded petrol, the fuel tank filler neck consists of a restrictor fitted with a safety system which **only allows a nozzle for unleaded petrol to be used** (at the pump).

To fill up with fuel, the engine must be stopped (and not only on standby in the case of vehicles equipped with the STOP and START function): you must switch off the ignition ➥ 2.4, ➥ 2.7.

Fire hazard.

Running out of fuel on diesel versions

Vehicles with key/remote control

– Set the ignition key to “On” position **M** ➥ 2.3 and wait a few minutes before starting to enable the fuel circuit to be primed;

– turn the key to position **D**. If the engine does not start, repeat the procedure;

– if the engine does not start after several attempts, please contact an authorised dealer.

Vehicles with card

With the card in the passenger compartment, press the start button ***4*** without pressing any of the pedals.

Wait a few minutes before starting.

This will enable the fuel circuit to be primed.

If the engine does not start, repeat the procedure.

If the engine does not start after several attempts, please contact an authorised dealer.

No modifications whatsoever are permitted on any part of the fuel supply system (electronic units, wiring, fuel circuit, injectors, protective covers, etc.) as this may be dangerous (unless undertaken by qualified Network personnel).

Persistent fuel odour

If you notice a persistent fuel odour you should:

– stop the vehicle as soon as traffic conditions allow and switch off the ignition;

– switch on the hazard warning lights and ask your passengers to leave the vehicle and stay clear of the traffic;

– contact an approved Dealer.

Useable capacity of the LPG tank: approximately 7.04 gallons (32 litres).

Filling up with LPG

Apply the parking brake, stop the engine, switch off the ignition and switch off the lights.

Always respect the safety instructions given at filling stations.

Depending on the country, before refilling you must screw the filling adapter ***5*** onto the LPG filler end piece.

It is always advisable to completely fill the tank.

When the pump stops delivering LPG, or when the pump flow reduces significantly, the maximum LPG level has been reached.

At this point, do not attempt to carry on filling.

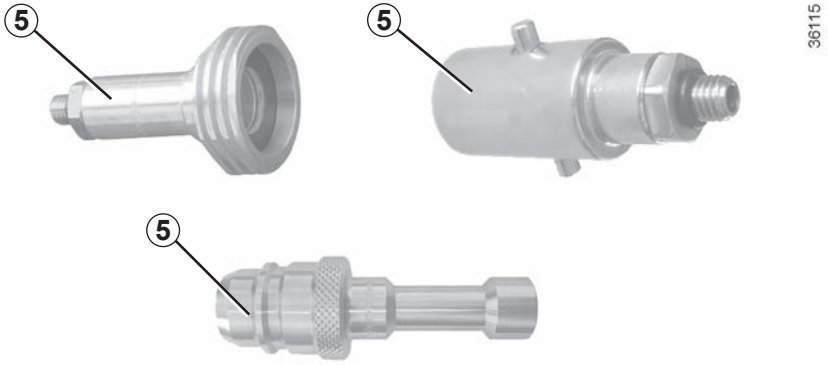

Filling stations without self-service

If the service station personnel carry out the LPG filling procedure, you must give them the adapter ***5***.

IMPORTANT: LPG filling adapter *5*

Depending on the country, the use of a specific adapter is required for LPG filling.
The filling adapter ***5*** is provided in a pouch in the glove box. It may or may not be present in the vehicle, depending in which country the vehicle was sold.
Before driving the vehicle to another country, it is essential to consult an approved dealer to find out the type of adapter to use if necessary.

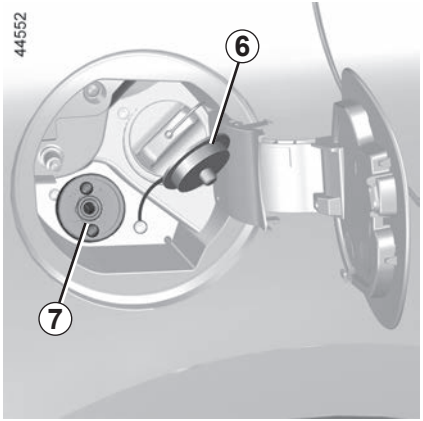

Filling stations with self-service

We recommend that you wear gloves when handling the LPG pistol.

Open the tank flap of your vehicle and unscrew the cap ***6*** from the end piece of the LPG filler ***7***.

Carefully follow the instructions shown on LPG distributors.

These explain how to fill up properly.

Depending on the type of station, it may be necessary to perform press and hold the station button before filling will start.

When the pump stops supplying LPG, or when the pump flow reduces significantly, the maximum tank level has been reached.

The filling will stop as soon as you release the button.

Release the stop lever (a small amount of gas may be released), lift the pistol and place it on the distributor.

After filling, refit the cap ***6*** to prevent any water or foreign bodies from entering the system.

To fill up with fuel, the engine must be stopped (and not only on standby in the case of vehicles equipped with the STOP and START function): you must switch off the ignition ➥ 2.4, ➥ 2.7.

Fire hazard.

Please ensure that you comply with the legislation of your country. It is important to remember that failure to respect regulations in force could lead to legal action being taken against the vehicle owner.

Operating principle

The reagent is intended for diesel engines fitted with the SCR (selective catalytic reduction) system.
Using a reagent reduces the quantity of nitrogen oxides in exhaust gases.
Reagent consumption in real time depends on vehicle usage conditions, the equipment fitted, and driving style.

Reagent quality

Use **only reagents which conform to standard** ISO 22241 and in accordance with the mark on the tank filler cap.

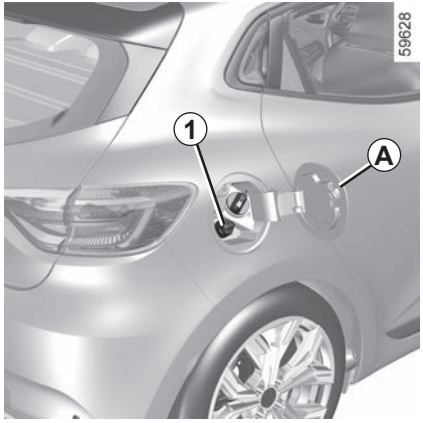

Filling

Useable capacity of the tank: 2.42 gal (11 litres) approximately.

With the ignition switched off, open the cover ***A***, then unscrew the cap ***1***.

Note: ammonium hydroxide vapour may escape from the cap opening when the tank temperature is high.

To fill up with reagent, the engine must be stopped (and not on standby in the case of vehicles equipped with the STOP and Start function).

You must switch off the ignition ➥ 2.4 ➥ 2.7.

If the “XXX MILES (XXX KM) failure Top up AdBlue” warning message appears, fill the reagent tank and refer to the filling instructions.

Risk of immobilisation of the vehicle.

Fuel filler cap: this is a specific type.

If you have to replace it, make sure it is identical to the original cap.

Contact an approved Dealer.

Do not wash the filler area with a high pressure washer.

The reagent must not come into contact with eyes or skin. If it does, wash the affected area with plenty of cold water. If necessary, consult a doctor.

Filling (continued)

The tank can be filled at the pump.

With the ignition off, insert the nozzle and insert it **fully** before turning it on to fill the fuel tank (risk of splashing).

Keep the nozzle in this position throughout the entire filling operation.

When the pump cuts out automatically at the end of the filling procedure, a maximum of two further filling attempts may be made, as there must be sufficient space in the fuel tank to allow for expansion.

In other filling cases, it is essential to read the information shown on the reagent container (e.g. the can or bottle).

Precautions for use

When filling:

– **handle the reagent with care. They can damage clothes, shoes, bodywork components etc.;**

– make sure that no water enters the fuel tank.

If the reagent overflows, or contaminates any paintwork, clean the affected area quickly with plenty of cold water and a soft cloth.

Note: if the reagent crystallises, use a soft sponge.

In extreme cold weather conditions

In frosty weather conditions, the reagent tank should be refilled when the indicator and the message “TOP UP AdBlue before 1200 km” appear on the instrument panel.

Special cases

The reagent fluid freezes below about -10°C.

In these conditions, do not attempt filling when the fluid is frozen. In the event of needing to top up or fill the tank with reagent (on), park the vehicle in a hotter location if possible so that the reagent becomes liquid again. Otherwise, have a qualified professional top up or fill up with reagent fluid.

After filling the reagent tank, check that the cap and cover are closed, start the engine and **WAIT 10 seconds with the vehicle stationary, engine running** before setting off again.

If this operation is not carried out, the filling of the tank will not be taken into account automatically until after several dozens of minutes of driving.

The message “--- Top up AdBlue” and/or the warning lights will continue to appear until the filling has been taken into account by the system.

No work whatsoever is permitted on any part of the system.

To prevent damage, only qualified personnel from our network may work on the system.

Maintenance/Range

The information displayed on the instrument panel may be accompanied by a beep.

Indicator lights	Message	What to do?
–	“Top Up AdBlue before 2400 km”	When the message is displayed when the ignition is switched on, you have **less than 1,488 miles (2,400 km) range.** Plan to refill, or have an Approved Dealer **refill the reagent** in the tank.
comes on.	“TOP UP AdBlue before 1200 km”	When the message is displayed when the ignition is switched on, you have **between 744 miles (1,200 km) and 496 miles (800 km) range.** Plan to refill, or have an Approved Dealer **refill the reagent** in the tank.
comes on.	“XXX KM failure Top up AdBlue”	The message is displayed when the ignition is switched on and is repeated: – Approximately every 62 miles (100 km), you have **between about 496 miles (800 km) and 124 miles (200 km) range**; – Approximately every 31 miles (50 km), you have **less than 124 miles (200 km) range**. In any event, fill or have an Approved Dealer **fill the reagent tank as soon as possible.**
flashes.	“0 KM failure Top up AdBlue”	**The engine will not start.** To restart, you must fill the reagent tank yourself.

REAGENT TANK (4/4)

System faults

When the indicator lights light up, this may be accompanied by a beep.

Indicator lights	Message	Readings
and come on.	“Check Anti- Pollution System” “AdBlue quality to check” “AdBlue injection to check”	Indicates a fault in the system. Contact your approved Dealer as soon as possible.
and come on.	“XXX KM failure antipollution”	Indicates a system fault and that in **less than 496 miles (800 km) it will become impossible to re-start the vehicle**. These warnings are repeated: – every 62 miles (100 km) until there is **between 500 miles (800 km) and 124 miles (200 km) left** before the vehicle cannot be restarted; – Every 31 miles (50 km) when there is **less than 124 miles (200 km) left** before the vehicle cannot be restarted. Contact your approved dealer as soon as possible.
and come on.	“0 KM failure antipollution”	Indicates that after the ignition is switched off **the vehicle will not restart**. Call an approved Dealer.

Section 2: Driving

Running in 2.2
Ignition switch 2.3
Starting, stopping the engine. 2.4
Stop and Start Function. 2.11
Special features of petrol and diesel versions. 2.15
Special features of LPG versions 2.19
Gear lever, handbrake. 2.23
Electronic parking brake 2.24
“AUTOHOLD” function. 2.28
Eco-driving. 2.29
Maintenance and antipollution advice 2.38
Environment 2.39
Tyre pressure loss warning 2.40
Driver correction devices and aids 2.46
Lane departure warning. 2.51
Lane Keeping Assist 2.56
Blind spot warning 2.62
Safe distance alert. 2.69
360° camera 2.73
Active emergency braking 2.82
Detection of road signs 2.90
Speed limiter 2.94
Cruise control 2.98
Stop and Go adaptive cruise control 2.103
Highway and Traffic Jam Companion 2.117
Parking distance control 2.133
Reversing camera 2.140
Assisted parking 2.143
Automatic gearbox. 2.148
Emergency call 2.153

RUNNING IN

Petrol version

For the first **600 miles** (1,000 km), do not exceed 78 mph (130 km/h) in the highest gear, or 3,000 to 3,500 rpm.

You may only expect top performance from your vehicle after approximately **1,800 miles (3,000 km)**.

Note: for a new vehicle in the running-in phase: the coolant level may be higher than the "**MAXI**" mark on the tank, then drop to between the levels "**MINI**" and "**MAXI**". This does not present a risk.

Service intervals: refer to the Maintenance Document for your vehicle.

Diesel version

For the first **930 miles (1,500 km),** do not exceed 80 mph (130 km/h) in the highest gear, or 2,500 rpm.

After completing this mileage you may drive faster, although you may only expect top performance after approximately 3,600 miles (6,000 km).

During the running in period, do not accelerate hard while the engine is still cold and do not let the engine over-rev.

Note: for a new vehicle in the running-in phase: the coolant level may be higher than the "**MAXI**" mark on the tank, then drop to between the levels "**MINI**" and "**MAXI**". This does not present a risk.

Service intervals: refer to the Maintenance Document for your vehicle.

IGNITION SWITCH: vehicle with key

Ignition switch

Off position LOCK 0 (steering lock applied)

To lock: remove the key and turn the steering wheel until the steering column locks.

To unlock: turn the key and the steering wheel slightly.

“Ignition” position ON 2

The ignition is switched on:

Any accessories (radio etc.) can be used.

“Start” position START 3

If the engine fails to start at the first attempt, the key must be turned back before the starter can be activated again.

Release the key as soon as the engine starts.

Note: on diesel versions, several seconds may pass between turning the key and the engine starting to allow for engine preheating.

Starting the engine

To start:

On vehicles equipped with automatic gearboxes, set the lever to position **P**.

Never switch off the ignition before the vehicle has stopped completely. Once the engine has stopped, the brake servo, power-assisted steering, etc. and the passive safety devices such as the airbags and pretensioners will no longer operate.

Petrol version

– Activate the starter **without accelerating**;
– release the key as soon as the engine starts.

Diesel version

– Turn the ignition key to the "**ON**"position **2** and hold this position until the engine preheating light goes off;
– turn the key to the start position "**START**" **3 without pressing the accelerator**;
– release the key as soon as the engine starts.

Special note: when starting the engine in very low exterior temperatures (below -10°C): hold down the clutch pedal until the engine starts.

Stopping the engine

With the engine idling, turn the key to the "**LOCK**" position **0**.

Never start your vehicle while freewheeling on a gradient. Risk of non-activation of power-assisted steering.
There is a risk of accidents.

Note: on vehicles equipped with a manual gearbox, in the event of engine stalling the message "Press Clutch" will be displayed on the instrument panel. Fully press the clutch pedal to restart the engine.

Driver's responsibility when parking or stopping the vehicle

Never leave an animal, child or adult who is not self-sufficient alone in your vehicle, even for a short time.

They may pose a risk to themselves or to others by starting the engine, activating equipment such as the electric windows or locking the doors, for example.

Also, in hot and/or sunny weather, please remember that the temperature inside the passenger compartment increases very quickly.

RISK OF DEATH OR SERIOUS INJURY.

LPG version

The engine is always started using petrol.

While the fuel tank is empty, the vehicle cannot start or drive in LPG mode only.

Operation using LPG/petrol bi-fuel requires the presence of petrol (for starting, high accelerations, cold temperatures, etc.).

If the orange warning light appears on the instrument panel and a beep sounds, fill the tank with fuel as soon as possible.

For more information on the LPG version ➥ 2.19.

Never switch off the ignition before the vehicle has stopped completely. Once the engine has stopped, the brake servo, power-assisted steering etc. and the passive safety devices such as the airbags and pretensioners will no longer operate.

Do not park the vehicle or run the engine in locations where combustible substances or materials such as grass or leaves can come into contact with the hot exhaust system.

Driver's responsibility when parking or stopping the vehicle

Never leave an animal, child or adult who is not self-sufficient alone in your vehicle, even for a short time.

They may pose a risk to themselves or to others by starting the engine, activating equipment such as the electric windows or locking the doors.

Also, in hot and/or sunny weather, please remember that the temperature inside the passenger compartment increases very quickly.

RISK OF DEATH OR SERIOUS INJURY.

E-Tech hybrid version

Switching on

To switch on the ignition:

– set the gear lever to **P**;

– depress the brake pedal;

– turn the key to the start position **3** "**START**" **without pressing the accelerator**;

– release the key as soon as the READY message appears on the instrument panel accompanied by a beep.

The message disappears when the vehicle speed is above approximately 3 mph (5 km/h).

Stopping the E-Tech hybrid system

With the vehicle stopped, turn the key to the **0** position "**LOCK**".

The ignition is switched off and the READY message disappears from the instrument panel.

Before carrying out any operation in the engine compartment, you must switch off the ignition.

Never switch off the ignition before the vehicle has stopped completely. Once the engine has stopped, the brake servo, power-assisted steering, etc. and the passive safety devices such as the airbags and pretensioners will no longer operate.

Before leaving the vehicle, check that the ignition has been switched off.

Driver's responsibility when parking or stopping the vehicle

Never leave an animal, child or adult who is not self-sufficient alone in your vehicle, even for a short time.

They may pose a risk to themselves or to others by starting the engine, activating equipment such as the electric windows or locking the doors, for example.

Also, in hot and/or sunny weather, please remember that the temperature inside the passenger compartment increases very quickly.

RISK OF DEATH OR SERIOUS INJURY.

STARTING, STOPPING THE ENGINE: vehicle with card (1/4)

The card must be inserted in detection zone ***1***.

To start:

– on vehicles with an automatic gearbox, while in **P** position, press the brake pedal and the ***2*** button.
For the E-Tech hybrid version, the READY message is displayed on the instrument panel accompanied by a beep.
The message disappears when the vehicle speed is above approximately 3 mph (5 km/h).
Release the brake pedal once the engine has started;

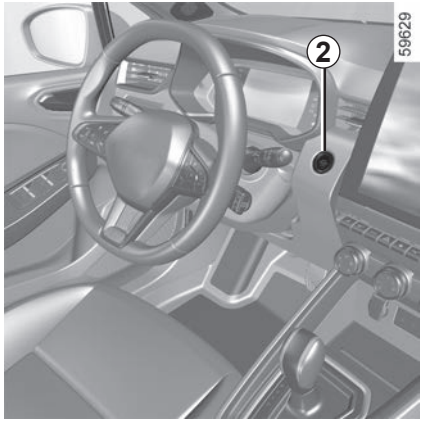

– vehicles with a manual gearbox, press the brake pedal and press the ***2*** button, then release the brake pedal once the engine has started.
If a gear is engaged, also press the clutch pedal.

Special features

– If any of the starting conditions are not met, the message “Press Brake + START” or “Press Clutch + START” or “Select Gearbox Position “P”” is displayed on the instrument panel;

– in some cases, it will be necessary to move the steering wheel whilst pressing the start button ***2*** to help unlock the steering column; the message “Turn Steering Wheel + START” will warn you of this;

Note: on vehicles equipped with a manual gearbox, in the event of engine stalling the message “Press Clutch” will be displayed on the instrument panel. Fully press the clutch pedal to restart the engine.

Depending on the vehicle, you may have a digital key that offers all the functions of the card.

However, if a card has been left inside the vehicle and the doors have been locked with a digital key, all of the card’s functions will be inhibited.

For more information ➥ 1.23.

LPG version

The engine is always started using petrol.

While the fuel tank is empty, the vehicle cannot start or drive in LPG mode only.

Operation using LPG/petrol bi-fuel requires the presence of petrol (for starting, high accelerations, cold temperatures, etc.).

If the orange warning light appears on the instrument panel and a beep sounds, fill the tank with fuel as soon as possible.

For more information on the LPG version ➥ 2.19.

Before carrying out any operation in the engine compartment, you must switch off the ignition.

Never switch off the ignition before the vehicle has stopped completely. Once the engine has stopped, the brake servo, power-assisted steering etc. and the passive safety devices such as the airbags and pretensioners will no longer operate.

Do not park the vehicle or run the engine in locations where combustible substances or materials such as grass or leaves can come into contact with the hot exhaust system.

Driver's responsibility when parking or stopping the vehicle

Never leave an animal, child or adult who is not self-sufficient alone in your vehicle, even for a short time.

They may pose a risk to themselves or to others by starting the engine, activating equipment such as the electric windows or locking the doors.

Also, in hot and/or sunny weather, please remember that the temperature inside the passenger compartment increases very quickly.

RISK OF DEATH OR SERIOUS INJURY.

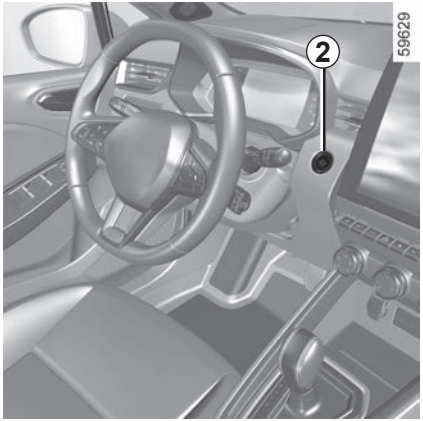

“Hands-free” starting with the tailgate open

In this case, the card should not be located in the luggage compartment, to prevent the risk of loss.

Accessories function

(switching on the ignition)

Once you have gained access to your vehicle, you may use some of its functions (radio, navigation, wipers, etc.).

To use the other functions, with the card in the passenger compartment, press the ***2*** button without pressing the pedals.

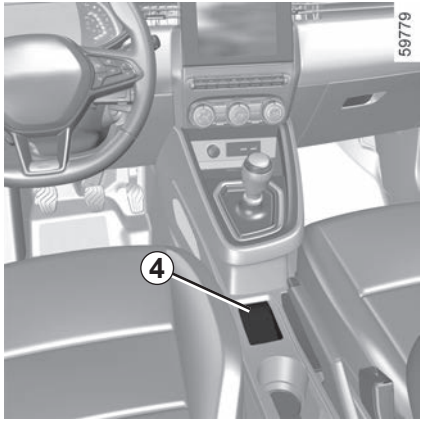

Operating faults

In certain cases, the hands-free card may not work:

– when the card battery is drained, flat battery, etc.;

– near to appliances operating on the same frequency as the card (monitor, mobile phone, video game, etc.);

– vehicle located in a high electromagnetic radiation zone.

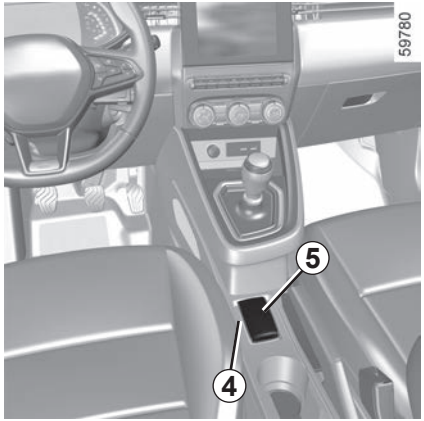

The message “Place card on zone + START” appears on the instrument panel.

Press the brake or clutch pedal, then place the card ***5*** (button side) on the placement area ***4***.

Press the ***2*** button to start the vehicle.

The message goes out.

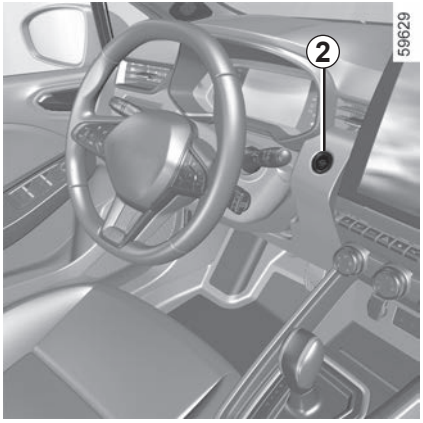

Conditions for stopping the engine

The vehicle must be stationary, with the lever positioned in **P** for vehicles with an automatic gearbox.

On the E-Tech hybrid version, the READY message is displayed on the instrument panel.

With the card in the vehicle, press button **2**: the engine stops.

On the E-Tech hybrid version, the READY message is switched off on the instrument panel.

The steering column is locked when a door is opened or the vehicle is locked.

If the card is no longer in the passenger compartment or if the card's battery is flat, when the vehicle is stationary and you try to switch the engine off, the message "Keycard absent: press/hold START" appears on the instrument panel: press the **2** button for longer than three seconds.

If the card is no longer in the passenger compartment, make sure you can retrieve it before pressing and holding the button: without the card, you will not be able to start the vehicle.

With the engine switched off, any accessories being used (radio, etc.) will continue to function for approximately 10 minutes.

When the driver's door is opened, the accessories stop working.

When you leave your vehicle, especially if you have your card with you, check that the engine is completely switched off.

Special case of the E-Tech hybrid version

With the vehicle stationary in electric operating mode, the message "ACTIVE ENGINE SWITCH OFF" appears on the instrument panel accompanied by a beep if:

– the driver's seatbelt is not fastened;

– the bonnet is open;

– the driver's door is open.

Never switch off the ignition before the vehicle has stopped completely. Once the engine has stopped, the brake servo, power-assisted steering, etc. and the passive safety devices such as the airbags and pretensioners will no longer operate.

STOP AND START FUNCTION (1/4)

This system enables a reduced fuel consumption and lower greenhouse gas emissions. The system is activated automatically when the vehicle is started. During driving, the system stops the engine (standby) when the vehicle comes to a stop or is moving at a slow speed (traffic jam, traffic lights etc.), depending on the vehicle.

Conditions for engine standby

The vehicle has set off from where it was parked;

For vehicles equipped with automatic gearboxes:

– the gearbox is in position **D**, **M**or **N**;

and

– the brake pedal is depressed (sufficiently hard);

If the warning light flashes, vehicle stationary, and the message “Press brake pedal” appears on the instrument panel, it indicates that the brake pedal is not sufficiently depressed;

and

– the accelerator pedal is not depressed;

and

– when the vehicle speed is zero during approximately one second or, depending on the vehicle, as soon as the vehicle speed is below approximately 3 mph (5 km/h).

The engine remains on standby if position **P** is selected, or if position **N** is selected with the handbrake engaged and the brake pedal released.

For vehicles equipped with manual gearboxes:

– the gearbox is in neutral;

If the warning light flashes, vehicle stationary, and the message “Select Neutral” appears on the instrument panel, this indicates that you must position the gear lever to neutral;

and

– the clutch pedal is released;

and

– the vehicle speed is less than approximately 3 mph (5 km/h).

For all vehicles:

Warning light on the instrument panel is lit when the engine is on standby.

The vehicle equipment remain operational while the engine is stopped.

When the engine switches to standby, the steering assistance may no longer be operational.

In this case it becomes operational again when the engine is no longer on standby or the speed exceeds approximately 1 mph (1 km/h) (downhill, slope etc.).

If the engine is put in standby, the electronic parking brake (depending on the vehicle) is not applied automatically.

Keep your vehicle stationary when the engine is on standby (shown by the warning light on the instrument panel).

The engine MUST be stopped (not put in standby) before leaving the vehicle. ➥ 2.4 ➥ 2.7.

Preventing the engine from standing by

In certain situations, such as negotiating a crossroads for instance, it is possible (with the system activated) to keep the engine running so as to be ready to move off quickly.

For vehicles equipped with automatic gearboxes and when the engine standby is performed only when the vehicle stopped:

Keep the vehicle stationary without pressing too hard on the brake pedal.

For vehicles equipped with manual gearboxes:

Keep the clutch pedal pressed right down.

To fill up with fuel, the engine must be stopped (and not only on standby in the case of vehicles equipped with the STOP and START function): you must switch off the ignition ➥ 2.4 ➥ 2.7.

Fire hazard.

Conditions for coming out of engine standby

For vehicles equipped with automatic gearboxes:

– when the driver's door is opened;

or

– when the driver's seat belt is unfastened;

or

– the brake pedal is released and position **D** or **M** engaged (depending on the vehicle);

or

– the brake pedal is released in gear position **N** with the handbrake off;

or

– the brake pedal is pressed again in gear position **P** or **N** engaged with the handbrake applied;

or

– the vehicle is in gear position **R**;

or

– the accelerator pedal is depressed;

or

– depending on the vehicle, in manual mode (**M**), the gear change paddles are activated ➥ 2.148.

"AUTOHOLD" function activated ➥ 2.28, the brake pedal may be released and the engine standby maintained.

Press the accelerator pedal to exit vehicle standby.

For vehicles equipped with manual gearboxes:

– when opening the driver's door, without any gear engaged and the clutch pedal released;

or

– when unfastening the driver's seat belt, without any gear engaged and the clutch pedal released;

or

– the gearbox is in neutral and the clutch pedal is slightly depressed;

or

– the engine is in gear and the clutch pedal is pressed right down.

Special note: depending on the vehicle, if you switch off the ignition when the engine is on standby, the warning light is displayed for a few seconds on the instrument panel.

For vehicles equipped with a manual gearbox:

the restart may be interrupted if the clutch pedal is released too quickly while a gear is engaged.

Conditions preventing the standby of the engine

Certain conditions prevent the system from using the engine standby function, including when:

– the driver's door is not closed;

– the driver's seatbelt is not fastened;

– reverse gear is engaged;

– the bonnet is not locked;

– the outdoor temperature is too low or too high;

– the battery is not sufficiently charged;

– the difference between the vehicle interior temperature and the automatic climate control instruction is too high;

– parking distance control is in operation;

– the altitude is too high;

Deactivate the Stop and Start function for any operation performed in the engine compartment.

– the gradient is too steep for vehicles fitted with an automatic gearbox;

– the "Clear view" function is activated ➥ 3.12 ;

– the engine temperature is too low;

– the emission control system is being regenerated;

– ...

Warning light is displayed on the instrument panel. This notifies you that engine standby is not available.

The warning light may appear along with a message on the instrument panel:

– "Optimising Battery Recharge" to prioritise battery charging;

– "Prioritising Thermal Comfort" to prioritise air conditioning;

– "Prioritising running engine" to prioritise engine operations.

Special feature of the automatic engine re-start

Under certain conditions, the engine can restart on its own in order to guarantee your safety and comfort.

This can occur especially when:

– the outdoor temperature is too low or too high;

– the “Clear view” function is activated ➥ 3.12 ;

– the battery is not sufficiently charged;

– the vehicle speed is above 3 mph (5 km/h) (downhill slope, etc.);

– repeated pressing on the brake pedal or braking system requirement;

– ...

The warning light is displayed on the instrument panel to notify you of automatic engine restarting.

The engine MUST be stopped (not put in standby) before leaving the vehicle. ➥ 2.4 ➥ 2.7.

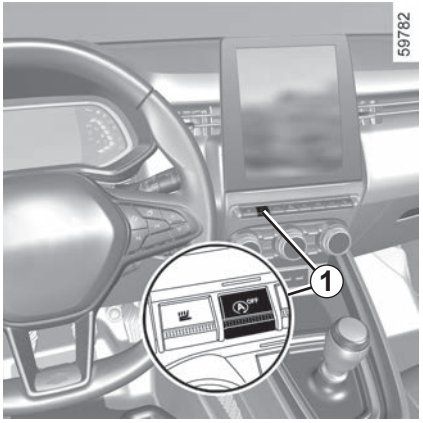

The warning light may appear along with a message on the instrument panel:

– “Optimising Battery Recharge” to prioritise battery charging;

– “Prioritising Thermal Comfort” to prioritise air conditioning;

– “Prioritising running engine” to prioritise engine operations.

Special note: engine on standby, press switch ***1*** to automatically restart the engine.

Deactivating, activating the function

Press ***1*** to deactivate the function.

The message “Stop & Start deactivated” appears on the instrument panel and the ignition warning light ***1*** appears.

Pressing again will reactivate the system.

The message “Stop & Start Activated” appears on the instrument panel and the ***1*** switch disappears.

The system is automatically reactivated each time the vehicle is started using the start button. ➥ 2.4 ➥ 2.7.

Operating faults

If the message “Check Stop & Start” appears on the instrument panel and the ***1*** switch warning light illuminates, this indicates that the system is deactivated.

Please consult an authorised dealer.

The following operating conditions should be avoided:

– driving for long periods when the low fuel level warning light is lit;

– using leaded petrol;

– using lubricant or fuel additives which are not approved.

Or operating faults such as:

– faulty ignition, running out of fuel or disconnected spark plugs resulting in the engine misfiring or cutting out when driving;

– loss of power.

may cause the catalytic converter to overheat, reducing its efficiency **which may irreparably damage it and cause heat damage to the vehicle.**

If you notice any of the above operating faults, have the necessary repairs carried out as soon as possible by an approved dealer.

These faults may be avoided by regularly taking your vehicle to an approved Dealer at the intervals specified in the Maintenance Document.

Starting problems

To avoid damaging the catalytic converter or the starter, and to prevent premature wearing of the battery, **do not keep** trying to start the engine (using the start button, or by pushing or towing the vehicle) **without having identified and corrected the starting fault**.

If the fault cannot be identified, do not keep trying to start the engine, but contact an approved Dealer.

Do not park the vehicle or run the engine in locations where combustible substances or materials such as grass or leaves can come into contact with the hot exhaust system.

Particle filter

The particle filter is used in the treatment of exhaust gases from petrol engines.
Depending on the vehicle, the warning light displayed on the instrument panel indicates that the filter is becoming clogged and requires cleaning. To clean it, when the warning light appears, and as traffic conditions and speed limits allow, drive at between about 31 mph (50 km/h) and 68 mph (110 km/h) until the light goes out.

After between approximately 5 and 20 minutes, the warning light should go out.

Note: the indicator light may go out after 20 minutes if the driving conditions required to clean the filter are not fully met.

If the vehicle is stopped before the warning light disappears you will have to restart the process from the beginning.

If the filter becomes saturated, the warning light and, depending on the vehicle, the warning light will appear on the instrument panel, accompanied by the message “Check injection”. In this case, please consult an Authorised Dealer.

If the STOP warning light and, depending on the vehicle, the warning light appears, accompanied by the “WARNING: Engine Failure Risk” message, stop the vehicle, switch off the engine and contact an Approved Dealer.

Warning light STOP requires you to stop immediately, for your own safety, as soon as traffic conditions allow. Switch off the engine and do not restart it. Contact an approved Dealer.

Diesel engine speed

Diesel engines are fitted with an injection pump **which prevents the engine speed being exceeded** irrespective of the gear selected.

If the message “Check Anti- Pollution System” is displayed along with warning lights and , consult an authorised dealer immediately.

When driving, depending on the fuel grade used, it is possible that white smoke may be emitted.

This is due to the exhaust particle filter being cleaned automatically, and does not affect the way the vehicle runs.

Running out of fuel

After the tank has been filled following **a complete draining of fuel**, the fuel system must be reprimed: ➥ 1.127 before restarting the engine.

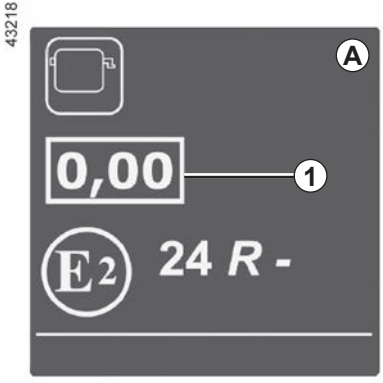

Engine smoke opacity label

You can find the information ***1*** on the label ***A*** stuck in the engine compartment or, depending on the vehicle, on the vehicle identification plate ➥ 6.2.

1 Diesel exhaust emissions.

Precautions to be taken in winter

To avoid any faults in icy weather:

– ensure that the battery is always fully charged;

– always keep the diesel tank relatively full to avoid water vapour condensing in it and accumulating at the bottom of the tank.

Do not park the vehicle or run the engine in locations where combustible substances or materials such as grass or leaves can come into contact with the hot exhaust system.

Particle filter

The particle filter is used in the treatment of exhaust gases from diesel engines.
Depending on the vehicle, the warning light displayed on the instrument panel indicates that the filter is becoming clogged and requires cleaning.

To do this, when the warning light is displayed, continue driving according to traffic conditions and observe the speed limit until the warning lights disappears. If possible, do not let the engine speed drop below 2,000 rpm.

The warning light should go out after 10 to 20 minutes. ➥ 1.84.

The display of the on the instrument panel may be accompanied by an increase in engine speed and operation of the cooling system in order to clean the particle filter.

Note: the warning light may reappear if the driving conditions are not fully met with regard to cleaning the filter. If the vehicle is stopped or if the engine speed drops below 2,000 rpm before the warning light goes out, the operation may need to be repeated.

To facilitate the particle filter regeneration, carry out a long driving phase (at least 20 minutes) on main roads every 124 miles (200 km).

If the filter becomes saturated, the warning light and, depending on the vehicle, the warning light will appear on the instrument panel, accompanied by the message “Check injection”. In this case, please consult an Authorised Dealer.

If the STOP warning light and, depending on the vehicle, the warning light appears, accompanied by the “WARNING: Engine Failure Risk” message, stop the vehicle, switch off the engine and contact an Approved Dealer.

Warning light STOP requires you to stop immediately, for your own safety, as soon as traffic conditions allow. Switch off the engine and do not restart it. Contact an approved Dealer.

These vehicles operate by bi-fueling using two types of fuel: LPG and petrol.

They have two separate tanks ➥ 1.127.

What is LPG?

Liquefied petroleum gas that complies with standard EN 589, or the equivalent national regulations.

It c[illegible]adily identified by its characteristic smell.

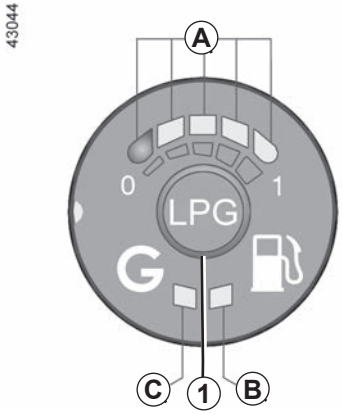

LPG/petrol fuel mode selection control *1*

This enables the driver to manually switch from one fuel mode to another.

Green warning light *C*

Rapid flashing of the warning light ***C*** indicates that the system is waiting for the necessary conditions to switch to LPG mode.

The constant warning light ***C*** indicates that LPG mode is activated.

Yellow warning light *B*

A constant warning light indicates that petrol mode is active.

Fuel gauge warning light *A*

The warning lights ***A*** (four green lights and one red light) indicate the level in the LPG tank.

The red warning light indicates the fuel tank.

The amount of LPG indicated is an indicative value.

The switch to the red warning light is accompanied by a beep.

This indicates that the tank is almost empty and that the engine is operating using the reserve LPG tank (maximum range of 50 miles (80 km)).

If the yellow warning light ***B*** is on and the green warning light ***C*** is flashing slowly while a beep can be heard, please take your vehicle to an authorised dealer for inspection.

Starting the engine

The engine is always started using petrol.

– For vehicles with a key ➥ 2.4.

– For vehicles with a card ➥ 2.7.

Note: if LPG mode is active when the engine is started, the system temporarily switches to “petrol” mode: the green warning light ***C*** goes out without a beep and the yellow warning light ***B*** comes on, indicating that petrol mode is active.

As soon as the environmental conditions are met (engine temperature level, etc.), the system automatically switches to LPG mode: the constant green warning light ***C*** comes on.

Changing fuel mode during driving

To switch from petrol mode to LPG mode manually

Press the button ***1***.

The transition to LPG is made during the first acceleration:

– the LPG level ***A*** is activated;

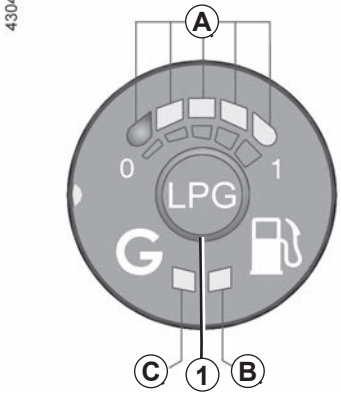

– the yellow ***B*** warning light goes out;

– the green warning light ***C*** flashes rapidly to confirm that LPG mode has been selected, then stops flashing when LPG mode is activated.

To switch from LPG mode to petrol mode manually

Release the accelerator pedal and press the control ***1***.

Petrol mode is indicated by the yellow warning light ***B***.

To access the information and to reset the LPG trip parameters ➥ 1.95.

While the fuel tank is empty, the vehicle cannot start or drive in LPG mode only.

Operation using LPG/petrol bi-fuel requires the presence of petrol (for starting, high accelerations, cold temperatures, etc.).

If the orange warning light comes on in the instrument panel and a beep sounds, fill the petrol tank with fuel as soon as possible.

Changing fuel mode during driving (continued)

Automatically switching from LPG mode to petrol mode

Depending on the vehicle, under certain conditions of use (e.g., hard acceleration), the system may opt to temporarily switch back to petrol mode.

The green warning light ***C*** flashes without any sound signal.

Once the suitable conditions are present once again, it will automatically switch back to LPG mode.

Note: after several unfruitful attempts, the system may decide to remain in petrol mode for the current journey.

A new attempt may be made after the engine has been stopped completely for about one minute.

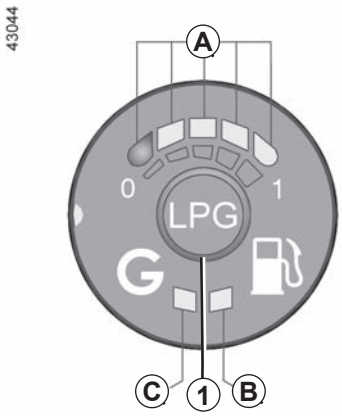

LPG tank empty

If there is no more LPG remaining in the tank then the system automatically switches to petrol mode.

You will be informed by:

– the green ***C*** and yellow ***B*** warning lights coming on;

– a beep sounds.

Pressing control ***1*** stops the beep from sounding and only the constant yellow warning light ***B*** stays on.

Fill up with LPG ➥ 1.127.

Operating faults

In the event of a fault which may affect the correct operation of the engine, the system automatically switches from LPG to petrol mode.

This is confirmed by:

– the appearance of the yellow warning light ***B***;

– slow flashing of the green warning light ***C***;

– a beep sounds.

Pressing control ***1*** stops the beep from sounding and only the yellow warning light ***B*** stays on.

Contact your approved Dealer as soon as possible.

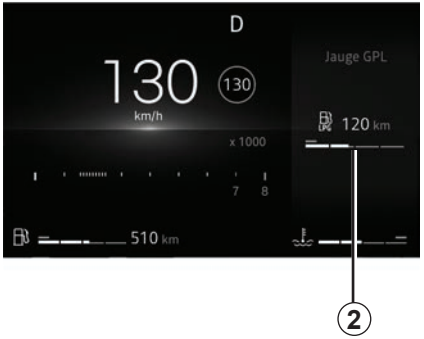

LPG fuel gauge display on the instrument panel

The LPG fuel level ***2*** is displayed on your instrument panel.

If driving under severe conditions

In cold weather (temperatures below 10°C) and depending on the quality of the gas used, the system may automatically manage the conditions for switching between LPG mode and petrol mode.

Note: for vehicles that are equipped, it is recommended that you use the ECO mode in these conditions (particularly below 0°C) in order to maximise the use of LPG mode ➥ 2.29.

In the event of an accident

The main precautions to be taken are the same as with petrol vehicles:

– apply the parking brake;

– stop the engine (a safety device that stops LPG from entering the engine is automatically triggered);

– switch off the ignition;

– observe local regulations.

LPG has a very specific smell so you will be able to detect any leaks easily.

If you smell gas in your vehicle or immediately surrounding your vehicle:

– switch to petrol mode immediately and make sure there are no flames or sources of fire near the vehicle;

– go to an authorised dealer.

Do not touch, hit or dismantle any part of the LPG system components.

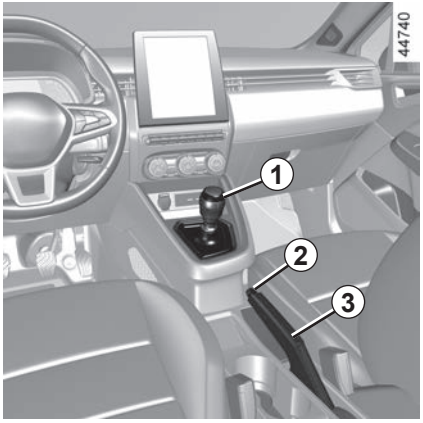

Gear lever

Vehicles with manual gearbox: refer to the grid on the gear lever knob ***1***.

Vehicles with an automatic gearbox: ➥ 2.148.

Selecting reverse gear

The reversing lights will come on as soon as reverse gear is selected with the ignition on.

Handbrake

To release:

Pull the lever ***3*** up slightly, press button ***2*** and then lower the lever to the floor.

The warning light (P) on the instrument panel will go out.

The red warning light on the instrument panel will come on if you are driving with an incorrectly released handbrake.

To apply:

Pull lever ***3*** upwards.

Check that the vehicle is immobilised.

The warning light (P) on the instrument panel will come on.

Make sure that the handbrake is fully released when driving (red indicator light off), otherwise overheating, or even damage, may occur.

When stationary and depending on the slope and/or vehicle load, it may be necessary to pull up the handbrake at least two extra notches and engage a gear (1st or reverse gear) on vehicles with a manual gearbox or position **P** on vehicles with an automatic transmission.

An impact to the underside of the vehicle while manoeuvring (e.g.: striking a post, raised kerb or other street furniture) may result in damage to the vehicle (e.g.: deformation of an axle).

To avoid any risk of accident, have your vehicle checked by an approved Dealer.

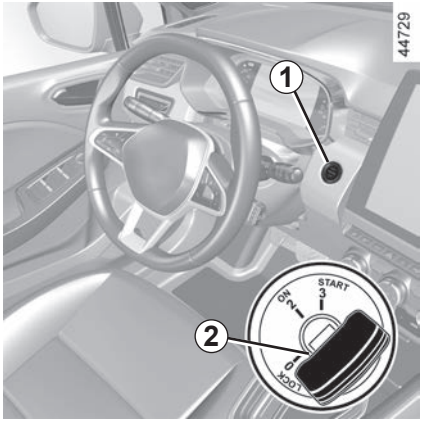

Assisted operation

Applying the electronic parking brake

With the vehicle stationary, the electronic parking brake can be used to immobilise the vehicle:

– **by pressing the engine start/stop button *1* or by turning the ignition key to the *2* "ON" position (2);**

or

– when **the driver's seat belt is unfastened;**

or

– when **the driver's door is opened;**

or

– for vehicles fitted with an automatic gearbox, when **position P is engaged.**

In all other instances, for example **the engine has stalled or is in standby due to the Stop and Start** ➥ 2.11, the assisted parking brake is not applied automatically. Manual mode must be used.

For certain country-specific model versions, the assisted brake application function is not activated. Refer to the information on "Manual operation".

To confirm that the electronic parking brake is applied, the message "Parking Brake ON" and the warning light (Ⓟ) on the instrument panel and warning light ***3*** on the switch ***4*** light up.

After the engine is switched off, indicator light ***3*** goes out several minutes after the assisted parking brake has been applied and indicator light (Ⓟ) goes out when the vehicle is locked.

The electronic parking brake can be used to immobilise the vehicle. Before leaving the vehicle, check that the electronic parking brake is fully applied.

Warning light ***3*** on switch ***4*** and warning light (Ⓟ) on the instrument panel illuminate to show that the parking brake is applied but switch off when the doors are locked. Depending on the vehicle, a sticker is located on the upper section of the windscreen to remind you of this.

Assisted operation (continued)

Note: in some situations (electronic parking brake failure, manual release of the parking brake, etc.), a beep sounds and the message “WARNING: Apply Parking Brake” appears on the instrument panel to warn you that the electronic parking brake has been released:

– with the engine running: when the driver’s door is opened;

– with the engine switched off (e.g. when the engine stalls): when a front door is opened.

In this case, pull and release switch ***4*** to apply the assisted parking brake.

Assisted release of the parking brake

The brake will be released as soon as the vehicle starts and accelerates.

Manual operation

You can apply the electronic parking brake manually.

Manually applying the electronic parking brake

Pull switch ***4***. Warning light ***3*** and warning light (Ⓟ) on the instrument panel light up.

Manually releasing the electronic parking brake

Press the ***1*** switch without pressing the pedals or turn the key ***2*** to the “**ON**” position **2** to switch on the vehicle ignition. Press the brake pedal then press switch ***4***: indicator light ***3*** on the switch and indicator light (Ⓟ) displayed on the instrument panel go out.

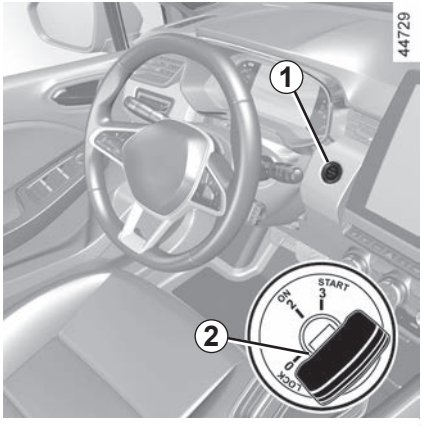

The electronic parking brake can be used to immobilise the vehicle. Before leaving the vehicle, check that the electronic parking brake is fully applied.

Warning light ***3*** on switch ***4*** and warning light (Ⓟ) on the instrument panel illuminate to show that the parking brake is applied but switch off when the doors are locked.

Depending on the vehicle, a sticker is located on the upper section of the windscreen to remind you of this.

Brief stop

To apply the electronic parking brake manually (when stopping at a red light, or stopping when the engine is running, etc.): pull and release the switch ***4***.

The brake is released as soon as the vehicle is started up again.

Special cases

To park on a slope or while towing a trailer, for example, pull switch ***4*** for a few seconds to gain the maximum braking.

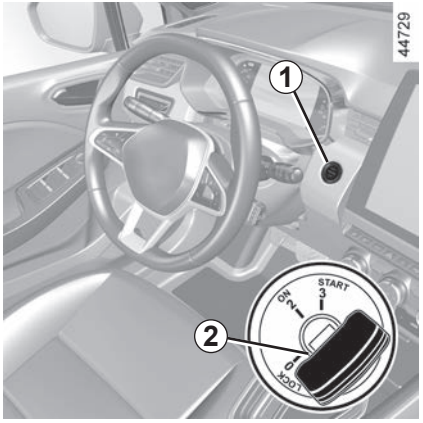

To park the vehicle without applying the electronic parking brake (if there is a risk of freezing, for example):

– engage any gear or the **P** position: the drive wheels will be mechanically locked by the driveshaft;

– switch off the engine by pressing the engine start/stop button ***1*** or by turning the ignition key ***2***;

– release the driver's seat belt;

– open the driver's door;

– manually release the electronic parking brake (please see the information on "Manually releasing the electronic parking brake" on the previous page);

– depending on the vehicle, the electronic parking brake is applied automatically. You will have to release it manually.

Version with an automatic gearbox

For safety reasons, automatic release is deactivated when the driver's door is open or not shut properly and the engine is running (in order to prevent the vehicle from moving without the driver).

The "Release parking brake manually" message appears on the instrument panel when the driver presses the accelerator pedal.

Never leave your vehicle without moving the selector lever to position **P** and switching off the engine.

This is because when the vehicle is stationary with the engine running and a gear engaged, the vehicle may begin to move if you accelerate.

There is a risk of accidents.

Operating faults

– If there is a fault, the warning light illuminates on the instrument panel accompanied by the "Check Parking Brake" message and, in some cases, the (P) warning light.

Contact your approved Dealer straight away.

– If there is an assisted parking brake fault, the warning light STOP comes on, along with the message "WARNING: Braking System", a beep and, in some cases, the warning light (P).

This means that you must stop as soon as traffic conditions allow.

If no lights or sounds are apparent, this indicates a fault in the instrument panel.

This indicates that it is essential to stop immediately (as soon as traffic conditions allow).

Ensure that the vehicle is correctly immobilised and contact an approved Dealer.

If the "WARNING: Electric System" or "Check battery" or "WARNING: Braking System" message appears, you must immobilise the vehicle by selecting first gear (on a manual gearbox), engaging **P** position (automatic gearbox) or by pulling the switch ***4*** for approximately 10 seconds.

If the conditions and the slope require it, chock the wheels of the vehicle.

Risk of loss of immobilisation of the vehicle.

Contact an authorised dealer.

“AUTOHOLD" FUNCTION

Vehicle stopped (e.g. at a red light, an intersection, a traffic jam, etc.), the function ensures braking force even when the driver releases the brake pedal.

The braking force is released as soon as the driver accelerates sufficiently with a gear engaged.

Activation

Press switch ***2***.
The ***1*** switch warning light ***2*** illuminates to confirm that the function is activated.

Deactivation

Press the brake pedal and ***2*** switch simultaneously.
The ***1*** switch warning light ***2*** disappears to confirm that the function is deactivated.

If the braking force is maintained, the parking brake is applied automatically when:
– the driver exits the vehicle;
or
– the vehicle is immobilised for more than approximately three minutes.

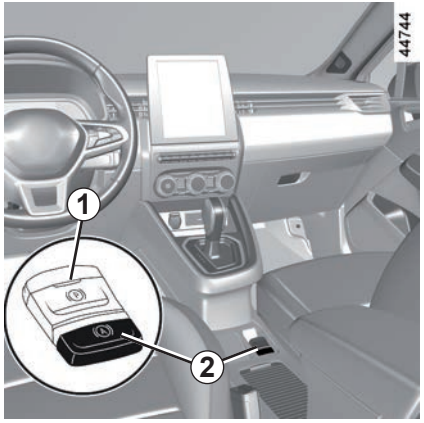

Conditions for maintaining the braking force

The following conditions must be met:

– the seat belt for the driver is fastened;

and

– the electronic parking brake is released;

and

– the vehicle is not stationary on a very steep slope.

The maintained braking force is confirmed by the warning light on the instrument panel.

Conditions for interrupting the braking force

The following conditions must be met:

– the driver accelerates sufficiently with a gear engaged;

or

– the driver disables the function.

Warning light goes out on the instrument panel.

Upon each start-up, the function continues the mode set at the time the engine was last switched off.

The electronic parking brake can be used to immobilise the vehicle. Before leaving the vehicle, check that the electronic parking brake is fully applied.
The indicator light on switch ***2*** and the warning light on the instrument panel illuminate to show that the parking brake is applied and switch off when the doors are locked. Depending on the vehicle, a sticker is located on the upper section of the windscreen to remind you of this.

DRIVING ADVICE, ECO DRIVING (1/9)

The fuel consumption, along with energy consumption for the E-Tech hybrid version, is approved in accordance with the standard and regulatory methods.

They are identical for all manufacturers and enable vehicles to be compared with one another.

Consumption in real time depends on vehicle usage conditions, the equipment fitted and the user's driving style.

To optimise fuel consumption, please refer to the following advice.

Depending on the vehicle, various functions are available to help you reduce your fuel or energy consumption:

– the rev counter;

– gear change indicator;

– the driving style indicator;

– the journey record and eco-driving advice via the multimedia screen;

– Eco acceleration indicator;

– ECO mode;

– the free-wheel function;

– the Stop and Start function ➥ 2.11.

For the E-Tech hybrid version, a charge meter is also available.

If fitted on the vehicle, the navigation system provides additional information.

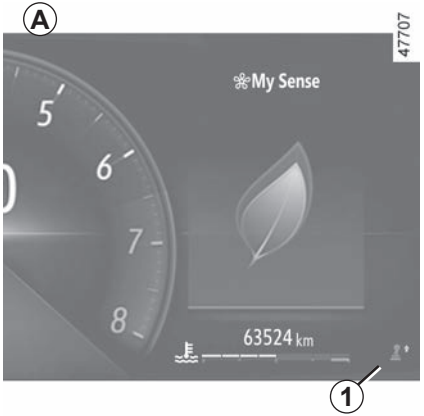

On the instrument panel *A* or *B*

Depending on the vehicle, the information display can be organised and customised based on the instrument panel customisation style selected from the multimedia screen.

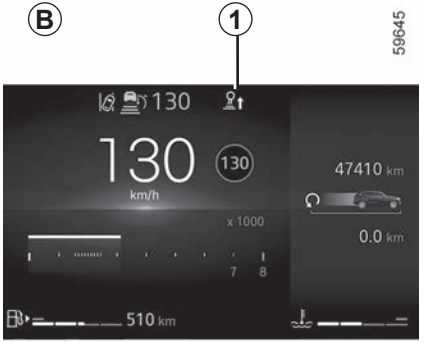

Gear change indicator *1*

Depending on the vehicle, to obtain optimum consumption levels, a warning light on the instrument panel lets you know the best time to move up or down a gear:

shift up a gear;

downshift a gear.

If you regularly follow this indicator, you will reduce your vehicle's fuel consumption.

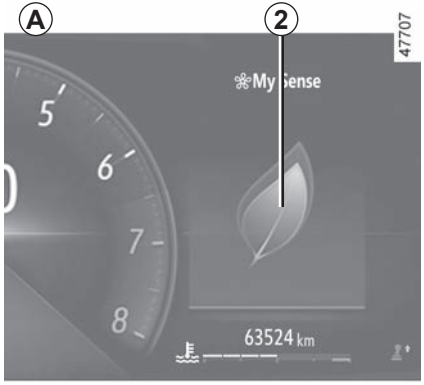

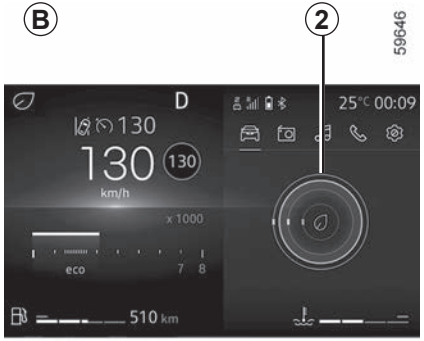

Driving style indicator *2*

Informs you about the driving style adopted in real time. This is shown by indicator light ***2***.

The more petals displayed on ***2***, the more your driving is flexible and economical.

If you regularly monitor this indicator, you will reduce your vehicle's fuel consumption.

Please refer to the multimedia instructions for further information.

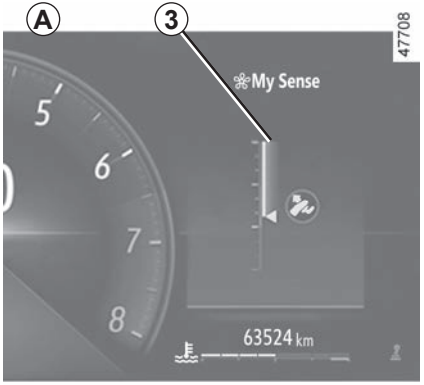

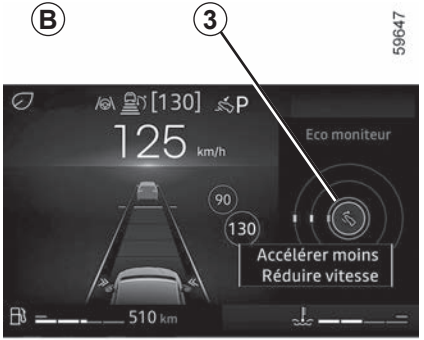

Acceleration indicator Eco *3*

This informs you in real time whether you are accelerating moderately or strongly.

This is shown by the ***3*** warning light:

– green: acceleration is moderate and correct;

– white: acceleration is too high;

– grey: acceleration is high.

Note: it is not possible to simultaneously display the driving style indicator ***2*** and the Eco acceleration indicator ***3***.

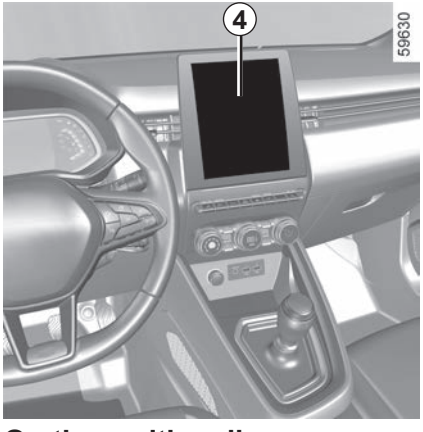

On the multimedia screen

Journey record

Once the engine is switched off, you will see “Journey record” displayed on the multimedia screen ***4***, enabling you to view information on your last journey.

This indicates:

– the general score;

– score evolution;

– distance without fuel consumption.

An overall rating from 0 to 100 is displayed to let you assess your eco driving performance.

The higher the rating, the lower the fuel consumption.

Eco advice is given to help improve your performance.

With your favourite journeys saved, you can compare your performance between trips and the performance of other vehicle users.

Please refer to the multimedia instructions for further information.

ECO mode

ECO mode is a function which optimises fuel consumption.

It affects certain driving operations (acceleration, shifting gears, cruise control, deceleration, etc.).

Limiting acceleration enables low fuel consumption in urban and surrounding areas.

Activating the function

Depending on the vehicle, the function can be activated either:

– by pressing switch ***5***;

– by pressing the ***6*** switch ➥ 3.2;

– from the multimedia screen (refer to the multimedia instructions).

The warning light ECO comes on on the instrument panel to confirm activation.

While driving, it is possible to leave the ECO mode temporarily in order to improve engine performance.

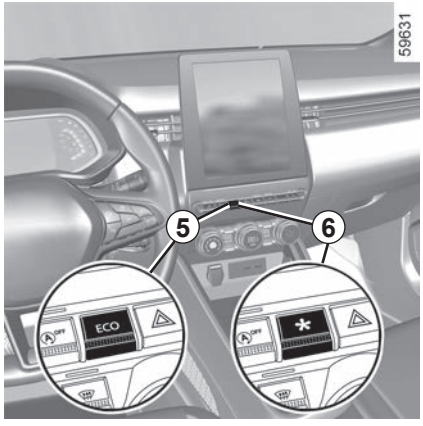

To do this, press the accelerator pedal firmly and fully.

ECO mode is reactivated when you take pressure off the accelerator pedal.

Disabling the function

Depending on the vehicle, the function can be deactivated either:

– by pressing switch ***5***;

– by pressing the ***6*** switch ➥ 3.2.

The warning light ECO goes out on the instrument panel to confirm deactivation.

Free-wheel function

Depending on the vehicle, for vehicles fitted with an automatic gearbox, in the deceleration phases (with the foot fully off the accelerator pedal), switching to freewheeling (automatic neutral) decreases engine braking and allows you to farther without accelerating in order to save fuel.

The freewheel warning light illuminates in ECO mode when the “ECO mode freewheeling” parameter is activated (ON) in the user settings ➥ 1.103.

The warning light colour is dim when the vehicle is not freewheeling.

This warning light is bright when the vehicle is while freewheeling (automatic neutral).

Charge meter
(on the instrument panel)

The charge meter gives the driver a real-time view of the vehicle's energy consumption.

Blue "Energy recovery" *A* usage zone

During driving, if you lift your foot off the accelerator pedal or press the brake pedal, the electric motor generates electrical current during deceleration and this energy is used to slow down the vehicle and recharge the traction battery.

"Energy consumption" *B* use area

The colour of the charge meter varies:

– **in green:** all-electric mode, the traction battery provides the energy required for the electric motor to power movement of the vehicle;

– **in white**: hybrid traction mode, the traction battery and/or the combustion engine provide the energy required to power movement of the vehicle.

The presence and display of this information depends on the type of ambient setting selected.

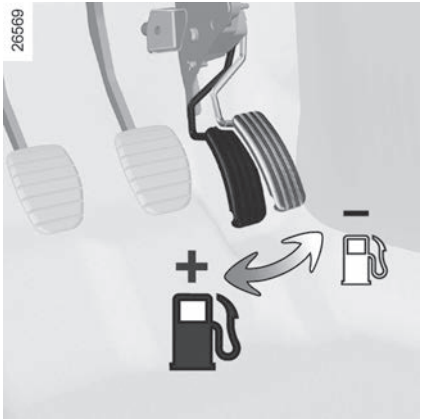

Driving advice and ECO driving

Heating levels

It is normal to notice an increase in the vehicle's fuel consumption when using the heating (particularly when the outside temperature drops below zero) or air conditioning.

Behaviour

– Drive carefully for the first few miles until the engine reaches its normal operating temperature, rather than let it warm up while the vehicle is stationary.

– High speeds significantly affect the vehicle's fuel consumption.

  Examples (at a steady speed):

  – reducing the speed from 80 mph (130 km/h) to 68 mph (110 km/h) approximately saves up to 20% of fuel approximately;

  – reducing the speed from 56 mph (90 km/h) to 50 mph (80 km/h) approximately saves up to 10% of fuel approximately.

– Dynamic driving involving heavy and frequent acceleration and braking is expensive on fuel in comparison to the time saved.

– Do not over rev the engine in the intermediate gears. You should always use the highest gear possible.

– Avoid sudden acceleration.

– Brake as little as possible. If you anticipate an obstacle or bend in advance, you may then simply release the accelerator pedal.

– Do not try to maintain the same speed up a hill, accelerate no more than you would on flat ground. Keep your foot in the same position on the accelerator pedal.

– Double declutching and accelerating before switching off are unnecessary in modern vehicles.

– Bad weather, flooded roads:

Do not drive through floods if the water is above the lower edge of the wheel rims.

Obstructions to the driver

On the driver's side, only use mats suitable for the vehicle, attached with the pre-fitted components, and check the fitting regularly.

Do not lay one mat on top of another.

There is a risk of wedging the pedals.

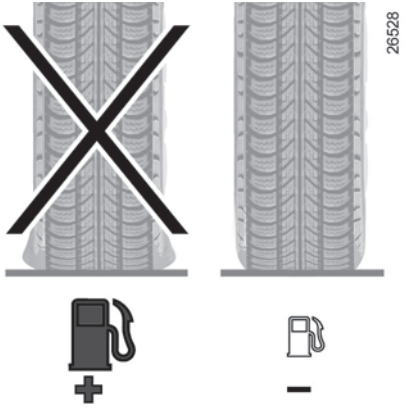

Tyres

– An underinflated tyre increases fuel consumption.

– To optimise fuel consumption, set the highest speed tyre pressure or the recommended pressure indicated on the edge of the driver's door ➥ 4.12.

– The use of non-recommended tyres can increase fuel consumption.

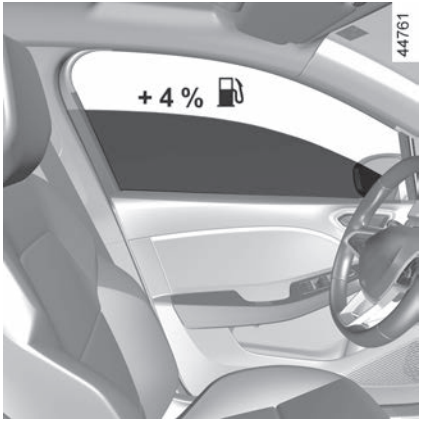

Advice on use

– Favour the ECO mode.

– Electricity is fuel; switch off all the electrical components which are not really needed. **However** (safety first), keep your lights on when the visibility is bad ("see and be seen").

– Use the air vents. Driving with the windows open at 60 mph (100 km/h) will increase fuel consumption by 4%.

– Never fill the fuel tank right to the brim to avoid overflow.

– **On vehicles equipped with non-automatic air conditioning**, switch off the air conditioning when it is not required.

Advice for reducing consumption and therefore helping to preserve the environment:
If the vehicle has been parked in the sun, open the doors for a few moments to let the hot air escape before starting the engine.

– Do not leave an empty roof rack fitted to the vehicle.

– It is better to fit a trailer for bulky objects.

– When towing a caravan, fit a wind deflector and adjust it carefully.

– Avoid using the car for door-to-door calls (short journeys with long waits in between) because the engine never reaches its normal operating temperature.

Your vehicle complies with criteria for recycling and recovering vehicles at the end of their service life, which entered into force in 2015.

Some parts of your vehicle have therefore been designed to facilitate future recycling.

These parts are easy to remove so that they can be recovered and reprocessed by recycling companies.

By virtue of its design, moderate fuel consumption and initial settings, your vehicle also conforms to current antipollution regulations. The manufacturer is actively striving to reduce pollutant exhaust gas emissions and to save energy. But the fuel consumption of your vehicle and the level of pollutant exhaust gas emissions are also your responsibility. Ensure that it is maintained and used correctly.

Maintenance

It is important to remember that failure to respect antipollution regulations could lead to legal action being taken against the vehicle owner.

In addition, replacing engine, fuel supply system and exhaust components with parts other than those originally recommended by the manufacturer may alter your vehicle so that it no longer complies with anti-pollution regulations.

Have your vehicle adjusted and checked by an authorised dealer, in accordance with the instructions given in your maintenance schedule: they will have all the equipment necessary for ensuring that your vehicle is maintained to its original standard.

Engine adjustments

– **Spark plugs:** for optimum conditions of use, output and performance the specifications laid down by our Design Department must be strictly applied.
  If the spark plugs have to be changed, use the make, type and gap specified for your vehicle's engine. Contact an authorised dealer for this.

– **Ignition and idle speed:** no adjustment is needed.

– **Air filter, fuel filter:** a choked element will reduce efficiency. It must be replaced.

Exhaust gas monitoring system

The exhaust gas monitoring system will detect any operating faults in the vehicle's antipollution system.
If this system malfunctions, toxic substances may be released into the atmosphere or damage may occur.

This warning light on the instrument panel will indicate if there are any faults in the system:
This lights up when the ignition is switched on and goes out when the engine is started.

– If it lights up continuously, consult an approved Dealer as soon as possible;
– if it flashes, reduce the engine speed until the light stops flashing. Contact an authorised dealer as soon as possible.

➥ 1.132

ENVIRONMENT

Your vehicle has been designed with respect for the **environment** in mind for its entire service life: during production, use and at the end of its life.

Manufacture

Your vehicle has been manufactured at a factory which complies with a policy to reduce the environmental impact on the surrounding areas (reduction of water and energy consumption, visual and noise pollution, atmospheric emissions and waste water; sorting and reusing waste).

Emissions

Your vehicle has been designed to emit fewer greenhouse gases (CO_2) while in use, and therefore to consume less fuel (eg. 140 g/km, equivalent to 5.3 l/100 km for a diesel vehicle).

Our vehicles are also equipped with a particle filter system including a catalytic converter, an oxygen sensor and an active carbon filter (the latter prevents vapour from the fuel tank being released into the open air).

For certain diesel vehicles, this system also has a particle filter to reduce the volume of soot particles emitted.

Please make your own contribution towards protecting the environment too

– Worn parts replaced in the course of routine vehicle maintenance (vehicle battery, oil filter, air filter, batteries, etc.) and oil containers (empty or filled with used oil) must be disposed of through specialist organisations.

– At the end of the vehicle's service life, it should be sent to approved centres to ensure that it is recycled.

– In all cases, comply with local legislation.

Recycling

Your vehicle is 85% recyclable and 95% recoverable.

To achieve these objectives, many of the vehicle components have been designed to enable them to be recycled. The materials and structures have been carefully designed to allow these components to be easily removed and reprocessed by specialist companies.

In order to preserve raw material resources, this vehicle incorporates numerous parts made from recycled plastics or renewable materials (vegetable or animal-derived materials such as cotton or wool).

TYRE PRESSURE LOSS WARNING (1/6)

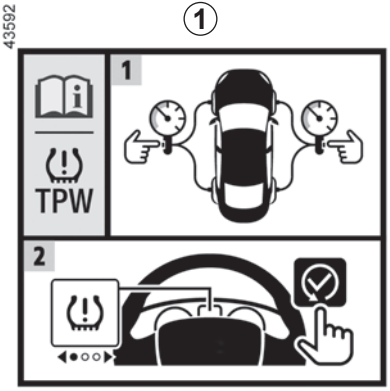

When fitted to the vehicle, this system notifies the driver if one or more tyres lose pressure.

The system can be identified by the ***1*** label in the vehicle.

Operating principle

This system detects a loss of pressure in one of the tyres by measuring the wheel speed while driving.

The warning light ***2*** comes on on the dashboard to alert the driver in the event of insufficient pressure (tyre deflated, punctured etc.).

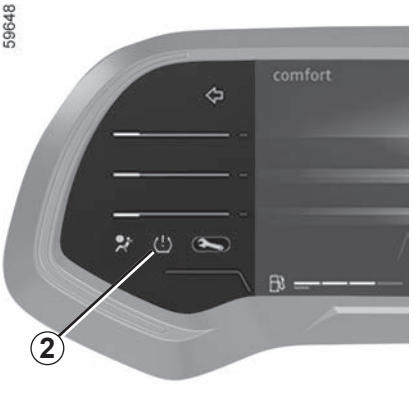

Operating conditions

The system must be reinitialised with tyre pressure equal to that shown on the tyre inflation pressure label ➥ 4.12.

If not, the system may not provide a correct warning in the event of significant tyre pressure loss.

Resetting should always be carried out after checking the tyre pressure of all four tyres when cold.

In the following situations, the system risk coming into action late or not functioning correctly:

– system not reset after reinflation or any operation on the wheels;

– incorrectly reset system: tyre pressures different from the recommended pressures;

– significant change in load or distribution of load on one side of the vehicle;

– sporty driving with strong acceleration;

– driving on snowy or slippery surface;

– driving with snow chains;

– fitting a single new tyre;

– use of tyres not approved by the network.

The sudden loss of pressure in a tyre (burst tyre, etc.) cannot be detected by the system.

Resetting the standard level for the tyre pressures

This should be done:

– after each re-inflation or resetting of tyre pressure;

– after changing a wheel;

– after changing wheels around.

Tyre pressures must correspond to the current usage of the vehicle (empty, carrying a load, motorway driving, etc.).

This function is an additional driving aid. The function does not take the place of the driver.
It cannot, therefore, under any circumstances replace the vigilance or the responsibility of the driver.
Check the tyre pressures, including the emergency spare wheel, once a month.

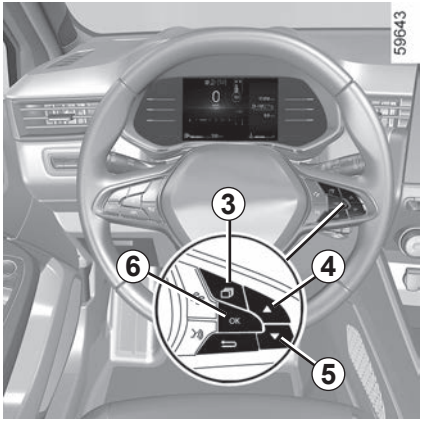

Resetting procedure

Ignition on, **vehicle stopped:**

– for vehicles fitted with a type ***A*** or ***B*** instrument panel (➥ 1.91, press the ***3*** switch briefly as many times as required to reach the “Vehicle” world;

– press the ***4*** or ***5*** switch briefly to reach the “Tyre pressure init. long press” page ***7***;

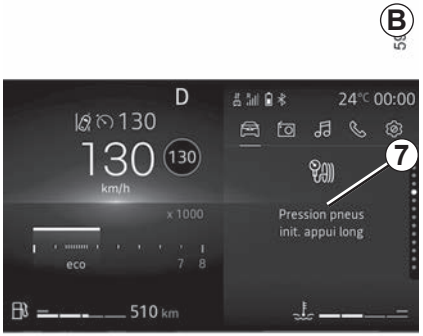

– press and hold the ***6*** “**OK** “ switch to launch the reset.

Hold down the ***6*** switch until the “Operation completed” message appears.

You can now drive.

If the vehicle is equipped with a navigation system, the resetting procedure may also be carried out using the multimedia screen: please see the equipment instructions.

TYRE PRESSURE LOSS WARNING (4/6)

The table below shows the possible messages related to the tyre resetting procedure.

Steps	Messages	Readings
–	Tyre pressure init. at stop	The message is displayed during driving. If you want to reset the pressure of the four tyres, stop the vehicle.
1	Tyre pressure init. long press	To reset the pressure of the four tyres, with the vehicle stationary, press and hold the ***6*** “**OK**” switch to launch resetting until the “If pressure OK [hold on]” message is displayed.
2	If pressure OK [hold on]	The message flashes to indicate that the system has registered the resetting procedure. If all four tyres have been correctly adjusted to match the tyre pressure values recommended on the tyre pressure label ➥ 4.12, press and hold the ***6*** “**OK**” switch until the “Operation completed” message is displayed.
3	Operation completed	The resetting procedure has been completed successfully. You can now drive.

Readjustment of tyre pressures

The pressure of the four tyres must be set when cold (refer to the label located on the edge of the driver's door).

If tyre pressures cannot be checked when the tyres are **cold**, the recommended pressures should be increased by **0.2** to **0.3** bar (**3** PSI).

Never deflate a hot tyre.

After each reinflation or readjustment of the tyre pressure, launch the resetting of the tyre pressure reference value.

Replacing wheels/tyres

Only use equipment approved by the network.

Otherwise the system may come into action late or not function correctly ➥ 5.13.

After each change of wheel/tyre, readjust the tyre pressure and launch the reset of the tyre pressure reference value.

Emergency spare wheel

If fitted on the vehicle, readjust the tyre pressure and launch the resetting of the tyre pressure reference value.

Tyre repair product and inflation kit

Only use equipment approved by the network.

Otherwise the system may come into action late or not function correctly ➥ 5.6.

After using the tyre inflation kit, readjust the tyre pressure and launch the resetting of the tyre pressure reference value.

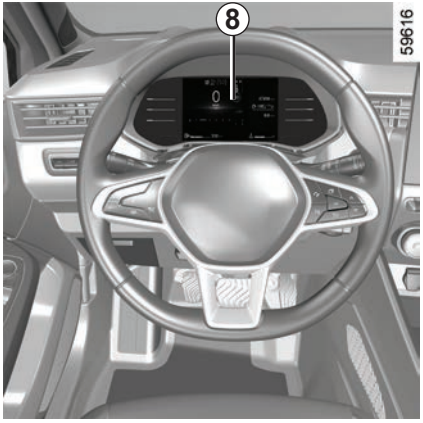

Tyre pressure faults

The table on the following page lists the warning messages which appear on the instrument panel ***8*** when the system detects a tyre pressure fault.

TYRE PRESSURE LOSS WARNING (6/6)

The information on the instrument panel signals any potential tyre pressure faults (e.g. deflated or punctured tyre).

Indicator lights	Messages	Readings
	Inflate tyres and init.	This indicates that tyre under-inflation or puncture has been detected. Check and adjust the pressure of the four tyres when cold and reset the system.
	Check tyre press and init.	This indicates that the reset has been unsuccessful. Check and readjust the tyre pressure before re-launching the resetting procedure.
	Check tyre press and init.	This indicates that the last system reset was carried out over 6 months ago or over approximately 6,214 miles (10,000 km). Check and readjust the tyre pressure before re-launching another resetting procedure.
+	Check TPW	This indicates a fault in the system. Consult an approved dealer.
	TPW not available	This indicates that an emergency spare wheel different in size to the other four wheels has been fitted to the vehicle. The system remains unavailable until a wheel identical in size to the other wheels has been fitted and the resetting procedure has been carried out.

Depending on the vehicle, this is composed of:

- **anti-lock braking system (ABS);**
- **electronic stability program (ESC) with understeer control and traction control;**
- **emergency brake assist;**
- **hill start assistance.**

Other driving assistance systems are detailed on the following pages.

These functions are an additional aid in the event of critical driving conditions, enabling the vehicle behaviour to be adapted to suit the driving conditions.

These functions do not take the place of the driver. **They do not increase the vehicle's limits and should not encourage you to drive more quickly.** Therefore, they can under no circumstances replace the vigilance or responsibility of the driver when manoeuvring the vehicle (the driver must always be ready for sudden incidents which may occur when driving).

Anti-lock braking system (ABS)

Under heavy braking, the ABS prevents the wheels from locking, allowing the stopping distance to be managed and keeping control of the vehicle.
Under these circumstances, the vehicle can be steered to avoid an obstacle whilst braking. In addition, this system can increase stopping distances, particularly on roads with low surface grip (wet ground etc.).
You will feel a pulsation through the brake pedal each time the system is activated. The ABS does not in any way improve the vehicle's physical performance relating to the road surface and road-holding. It is still **essential** to follow the rules of good driving practice (such as driving at a safe distance from the vehicle in front etc.).

In an emergency, apply **firm and continuous pressure** to the brake pedal. There is no need to pump it repeatedly. The ABS will modulate the force applied in the braking system.

Operating faults:

– and lit up on the instrument panel accompanied by the messages “Check ABS”, “WARNING: Check Braking System” and “Check ESC”: this indicates that the ABS, the ESC and the emergency brake assist are disabled. **Braking is always enabled**;

– , , and STOP lit on the instrument panel accompanied by the message “WARNING: Braking System”: **this indicates a fault with the braking system.**

In both cases, please consult an Authorised Dealer.

Your braking systems are partially operational. However, **it is dangerous to brake suddenly** and it is essential to stop immediately, as soon as traffic conditions allow. Call an approved Dealer.

Electronic stability program (ESC) with understeer control and traction control

Electronic stability program ESC

This system helps you to keep control of the vehicle in critical driving conditions (avoiding an obstacle, loss of grip on a bend, etc.).

Operating principle

A sensor in the steering wheel detects the direction selected by the driver.

Other sensors throughout the vehicle measure the actual direction.

The system compares driver input to the actual trajectory of the vehicle and corrects the trajectory if necessary by controlling the braking of certain wheels and/or engine power. In the event that the system is triggered, the warning light flashes on the instrument panel.

Understeer control

This system optimises the action of the ESC in the case of pronounced understeering (loss of front axle road holding).

Traction control

This system helps to limit wheelspin of the drive wheels and to control the vehicle when pulling away accelerating or decelerating.

Operating principle

Using the wheel sensors, the system measures and compares the speed of the drive wheels at all times and slows down their over-rotation. If a wheel is starting to slip, the system brakes automatically until the drive supplied becomes compatible with the level of grip under the wheel again.

The system also adjusts the engine speed to the grip available under the wheels, independently of the pressure exerted on the accelerator pedal.

In some situations (driving on very wet ground: snow, mud, etc. or driving with snow chains fitted), the system may reduce the engine output to limit wheelspin.

Operating faults

When the system detects an operating fault the message “Check ESC” and warning light and appear on the instrument panel. In this case, the ESC and traction control system are deactivated.

Consult an approved dealer.

Emergency brake assist

This system supplements the ABS and helps reduce vehicle stopping distances.

Operating principle

The system is for detecting an emergency braking situation. In this case, the braking system immediately develops maximum power and may trigger ABS regulation.

ABS braking is maintained as long as the brake pedal is applied.

Brake lights come on

Depending on the vehicle, these may flash in the event of sudden deceleration.

Braking anticipation

Depending on the vehicle, when you rapidly release the accelerator, the system anticipates the braking manoeuvre in order to reduce stopping distances.

Special cases

When using the cruise control:

– if you use the accelerator, when you release it, the system may be triggered;

– if you do not use the accelerator, the system will not be triggered.

Operating faults

When the system detects an operating fault the message “WARNING: Check Braking System” appears on the instrument panel along with the warning light.

Consult an approved dealer.

These functions are an additional aid in the event of critical driving conditions, enabling the vehicle behaviour to be adapted to suit the driving conditions.

These functions do not take the place of the driver. **They do not increase the vehicle’s limits and should not encourage you to drive more quickly.** Therefore, they can under no circumstances replace the vigilance or responsibility of the driver when manoeuvring the vehicle (the driver must always be ready for sudden incidents which may occur when driving).

Hill start assistance

Depending on the gradient of the incline, this system assists the driver when starting on a hill. It prevents the vehicle from rolling backwards by automatically applying the brakes when the driver lifts his/her foot off the brake pedal to depress the accelerator pedal.

System operation

It only operates when the gear lever is in a position other than neutral (other than **N** or **P** for automatic transmissions) and the vehicle is completely stationary (brake pedal depressed)

The system holds the vehicle for approximately **2 seconds**. The brakes are then gradually released (the vehicle will move according to the slope).

The hill start assistance system cannot completely prevent the vehicle from rolling backwards in all situations (extremely steep gradients etc.).

In all cases, the driver may depress the brake pedal to prevent the vehicle from rolling backwards.

The hill start assistance function should not be used for prolonged stops: use the brake pedal.

This function is not designed to immobilise the vehicle permanently.

If necessary, use the brake pedal to stop the vehicle.

The driver must remain particularly vigilant when driving on slippery or low-grip surfaces.

Risk of serious injury.

LANE DEPARTURE WARNING (1/5)

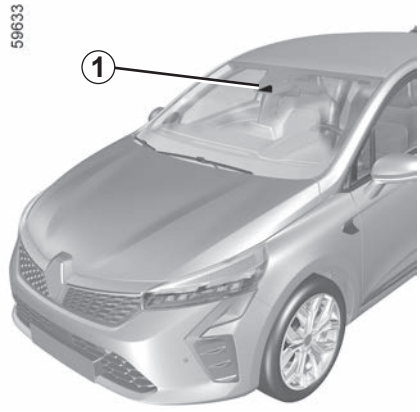

Using information from the ***1*** camera, the function warns the driver when a continuous or broken line is crossed or when approaching the roadside (divider, barrier, pavement, embankment, etc.) without the direction indicator lights being activated.

Location of the camera *1*

Make sure the windscreen is not obscured (dirt, mud, snow, condensation etc.).

This function is an additional driving aid. This function is not under any circumstances intended to replace the due care and attention of the driver, who should at all times be in control of the vehicle.

The lane departure warning function does not correct the vehicle's trajectory.

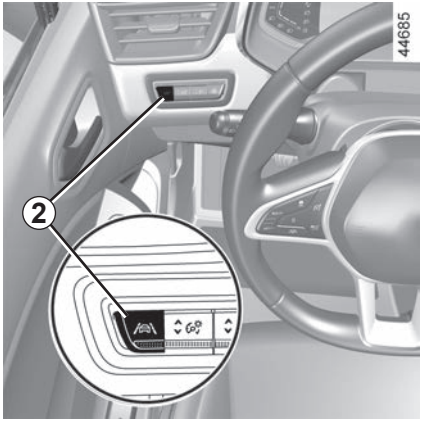

Activation/deactivation

To activate the function, press the ***2*** switch as many times as required to select “Lane Departure Warning” on the instrument panel. The “Lane departure warning on” message and warning light are displayed on the instrument panel.

To disable the function, press the ***2*** switch as many times as required to select “Lane departure warning off” (or, depending on the vehicle “Lane Keeping deactivated”) on the instrument panel. Warning light goes out on the instrument panel.

Operation

When the function is activated, the warning light and the left and right lines ***3*** are displayed in grey on the instrument panel.

The function is set to notify the driver if:

– speed is between approximately 43 mph (70 km/h) and 112 mph (180 km/h);

and

– the warning light and left/right line indicators ***3*** are coloured white.

The warning function is triggered if the vehicle breaches a line or approaches a roadside (divider, barrier, pavement, embankment, etc.) without the direction indicator lights being activated.

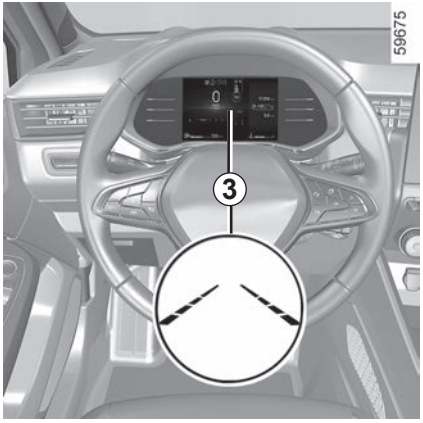

The function alerts the driver:

– by a vibration in the steering wheel;

and

– the warning light and ***3*** the indicator for the crossed line turn red.

Each time the vehicle is started, the function continues the mode saved the last time the engine was stopped.

Temporarily not available

– Very fast lane departure;
– driving continuously on a line;
– four seconds approximately after changing lanes;
– tight bends;
– impaired visibility;
– activation of one of the direction indicator lights;
– strong acceleration;
– ...

When the function is not available, the warning light and the left/right indicators turn to grey on the instrument panel.

Conditions for non-activation of the system

The system cannot be activated when:

– reverse gear is engaged;
– the field of vision of the camera is obstructed;
– the STOP warning light is displayed.

The warning light and the left/right line indicators turn to grey on the instrument panel.

Adjustment

Vehicles fitted with a multimedia screen.

To access the function settings from the multimedia screen ***4*** please refer to the multimedia instructions:

– “Vibration”: adjust the steering wheel vibration level;

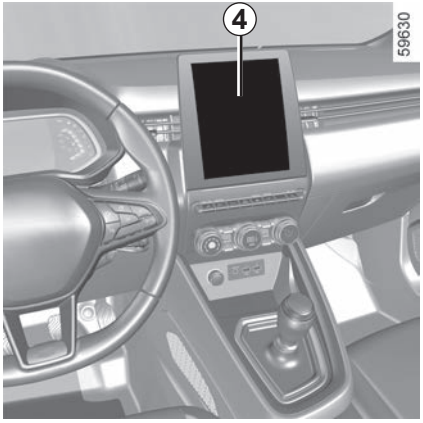

– “Alert”: adjust the line detection sensitivity level. To do this, select:
  – “Late”: line detected when crossing;
  – “Standard”: line detected on approach;
  – “Early”: line detected nearby.

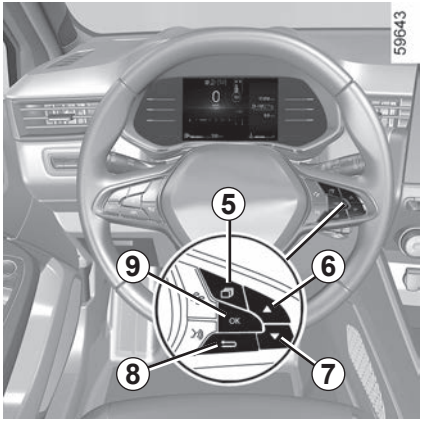

Adjustments (continued)

Vehicles not fitted with a multimedia screen

– With the vehicle stationary, press the ***5*** switch as many times as required to reach the “Settings” world;

– press the ***6*** or ***7*** control repeatedly to reach the “Vehicle setting” menu. Press the switch ***9*** **OK**;

– press the ***6*** or ***7*** control repeatedly to reach the “DRIVING ASSIST” menu. Press the switch ***9*** **OK**;

– press the ***6*** or ***7*** control repeatedly to reach the various levels of the “Lane Departure Warning volume”, “Lane Departure Warning vibration” or “Lane Departure Warning sensitivity” settings. Press the ***9*** **OK** switch to confirm the desired levels;

– press the ***8*** switch to return to the previous menu.

Operating faults

In the event of a malfunction, the left and right line indicators (and, depending on display style, the warning light) disappear or stay grey on the instrument panel.

In some cases, they are accompanied by the message “Front camera to check” or the warning light on the instrument panel.

Consult an approved dealer.

This function is an additional driving aid. This function is not under any circumstances intended to replace the due care and attention of the driver, who should at all times be in control of the vehicle.

System servicing/repairs

– In the event of an impact, the camera alignment may be changed, and its operation may consequently be affected. Deactivate the function, then consult an authorised dealer.
– Any work in the area where the camera is located (repairs, replacements, windscreen modifications etc.) must be carried out by a qualified professional.

Only an authorised dealer is qualified to service the system.

In the event of system disturbance

Some conditions can disturb or damage the operation of the system, such as:
– windscreen obscured (by dirt, ice, snow, condensation etc.);
– a complex environment (tunnel etc.);
– poor weather conditions (snow, rain, hail, black ice etc.) ;
– poor visibility (night, fog etc.);
– the road markings are irregular or difficult to distinguish (e.g. partially erased, excessive spacing, distorted road surface) ;
– being dazzled (glaring sun, lights of vehicles travelling in the opposite direction etc.);
– the road is narrow, winding or undulating (tight bends etc.);
– closely following a vehicle travelling in the same lane.

Risk of false alarms or absence of warnings

Using information from the ***1*** camera, the function triggers corrective action on the vehicle steering system when a continuous or broken line is crossed or when approaching the roadside (divider, barrier, pavement, embankment, etc.) without the direction indicator lights being activated.

You can **retake control of the vehicle** at any time by operating the steering wheel.

Location of the camera *1*

Make sure the windscreen is not obscured (dirt, mud, snow, condensation etc.).

This function is an additional driving aid.

This function is not under any circumstances intended to replace the due care and attention of the driver, who should at all times be in control of the vehicle.

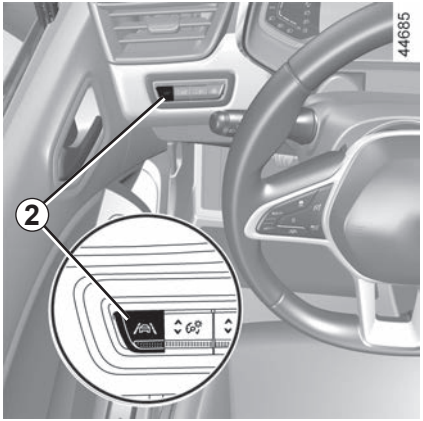

Activation/deactivation

To activate the function, press the ***2*** switch as many times as required to select “Lane Keeping Assist” on the instrument panel.

The “Lane Keeping activated” message and warning light are displayed on the instrument panel.

When Lane Keeping Assist is activated, the “Lane Departure Warning” function is automatically activated. ➥ 2.51.

To disable the function, press the ***2*** switch as many times as required to select “Lane Keeping deactivated” on the instrument panel.

Warning light goes out on the instrument panel.

Note: deactivating the “Lane Keeping Assist” function causes deactivation of the “Lane Departure Warning” function.

Each time the vehicle is started, the function continues the mode saved the last time the engine was stopped.

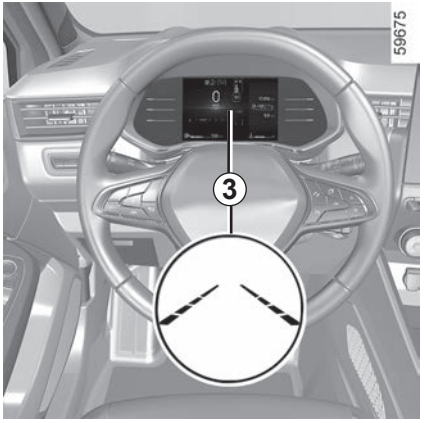

Operation

When the function is activated, the warning light and the left and right lines ***3*** are displayed in grey on the instrument panel.

The function is set to operate when the vehicle speed is between approximately 43 mph (70 km/h) and 112 mph (180 km/h) and if the warning light and left-hand and right-hand line indicators ***3*** appear in white.

The function operates if the vehicle breaches a line or if the vehicle approaches the roadside (divider, barrier, pavement, embankment, etc.) without the direction indicator lights being activated.

In these cases:

– the function triggers an action on the vehicle's steering system to correct the vehicle trajectory;

– the ***3*** indicator on the side of the breached line turns to yellow on the instrument panel.

Note: on bends, the function allows for slightly cutting the bend.

If the corrective action on the steering system is not sufficient, the warning light and the indicator ***3*** on the side of the breached line turn to red on the instrument panel, accompanied by a vibration on the steering wheel.

Special cases

When using the function:

– If the system can no longer detect any action by the driver on the steering wheel, the warning light appears in orange on the instrument panel, accompanied by the message "Keeping hands on steering wheel" and an audible warning.

  The audible warning is emitted along with the warning light and message until the driver takes control;

– if the system is active for too long, an audible warning is emitted and the indicator ***3*** on the side of the line concerned flashes until the driver takes control.

You can interrupt the trajectory correction at any time by moving the steering wheel.

Temporarily not available

– Very fast lane departure;
– driving continuously on a line;
– four seconds approximately after changing lanes;
– tight bends;
– impaired visibility;
– activation of one of the direction indicator lights;
– strong acceleration;
– emergency braking;
– ...

If the function is unavailable, the warning light and the left/right correction warning lights ***3*** appear in grey on the instrument panel.

Conditions for non-activation of the system

The system cannot be activated when:

– reverse gear is engaged;
– the field of vision of the camera is obstructed;
– the STOP warning light is displayed.

The warning light and the left/right line warning lights are displayed in grey on the instrument panel.

Adjustment

Vehicles fitted with a multimedia screen.

To access the function settings from the multimedia screen ***4*** please refer to the multimedia instructions:

– “Vibration”: adjust the steering wheel vibration level;

– “Alert”: adjust the line detection sensitivity level. To do this, select:
  – “Late”: line detected when crossing;
  – “Standard”: line detected on approach;
  – “Early”: line detected nearby.

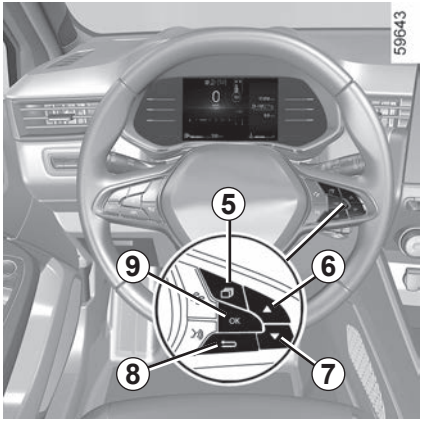

Adjustments (continued)

Vehicles not fitted with a multimedia screen

– With the vehicle stationary, press the ***5*** switch as many times as required to reach the “Settings” world;

– press the ***6*** or ***7*** control repeatedly to reach the “Vehicle setting” menu. Press the switch ***9*** **OK**;

– press the ***6*** or ***7*** control repeatedly to reach the “DRIVING ASSIST” menu. Press the switch ***9*** **OK**;

– press the ***6*** or ***7*** control repeatedly to reach the “Lane Keep Assist sensitivity” level setting. Press the ***9*** **OK** switch to confirm the desired level;

– press the ***8*** switch to return to the previous menu.

Operating faults

When the system detects an operating fault the message “Check Front camera” appears on the instrument panel.

Depending on the vehicle, the message is accompanied by the display of the warning light on the instrument panel.

Consult an approved dealer.

This function is an additional driving aid. This function is not under any circumstances intended to replace the due care and attention of the driver, who should at all times be in control of the vehicle.

System servicing/repairs

– In the event of an impact, the camera alignment may be changed, and its operation may consequently be affected. Deactivate the function and consult an authorised dealer.
– Any work in the area where the camera is located (repairs, replacements, windscreen modifications etc.) must be carried out by a qualified professional.

Only an authorised dealer is qualified to service the system.

In the event of system disturbance

Some conditions can disturb or damage the operation of the system, such as:
– windscreen obscured (by dirt, ice, snow, condensation etc.);
– a complex environment (tunnel etc.);
– poor weather conditions (snow, rain, hail, black ice etc.);
– poor visibility (night, fog etc.);
– the road markings are irregular or difficult to distinguish (e.g. partially erased, excessive spacing, distorted road surface);
– being dazzled (glaring sun, lights of vehicles travelling in the opposite direction etc.);
– the road is narrow, winding or undulating (tight bends etc.);
– closely following a vehicle travelling in the same lane.

In this case, the “Lane Keeping Assist” may react incorrectly or not at all.

Risk of unwanted, incorrect correction or no correction of trajectory.

Deactivating the function

You must disable the function if:
– the area of the camera has been damaged (on the windscreen side or the interior rear-view mirror side);
– the road is slippery (snow, black ice, aquaplaning, gravel etc.) ;
– poor visibility (night, fog etc.);
– the windscreen is cracked or distorted (do not carry out windscreen repairs in this area; have it changed by an Authorised Dealer);
– the vehicle is towing a trailer or a caravan;
– the vehicle is entering an area with several surface markings (an area with road works etc.).

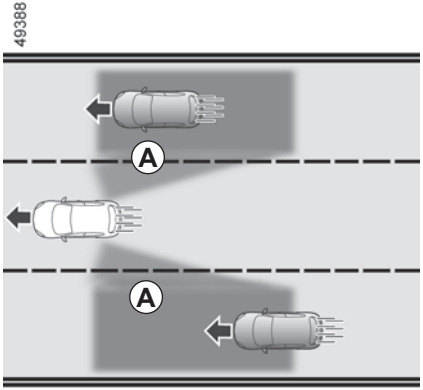

Using information from the sensors installed on each side of the rear bumper (area ***C***), the function warns the driver:

– when another vehicle appears in the detection area ***A***;

and/or

– when there is a risk of collision with a vehicle that is in area ***B***, driving faster than you.

The function warns you when the vehicle is travelling at a speed above approximately 9 mph (15 km/h).

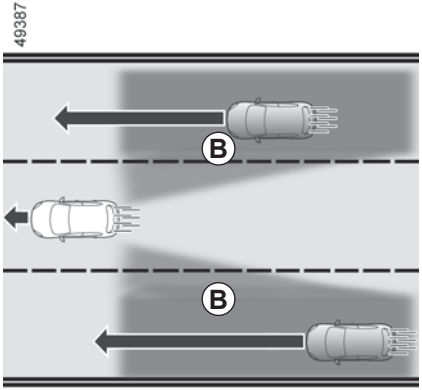

This function is an additional driving aid.

This function is not under any circumstances intended to replace the due care and attention of the driver, who should at all times be in control of the vehicle.

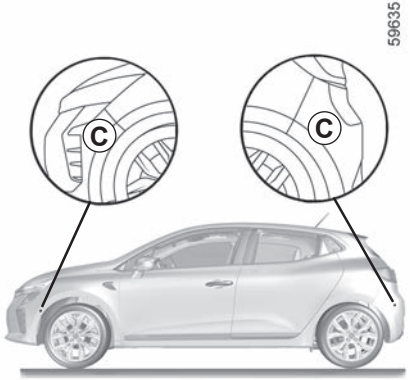

Special feature

Make sure that the radar area ***C*** is not obscured (by stickers, mud, snow etc.).

If a radar is obscured, the message “Side radars no visibility” will appear on the instrument panel. Clean the area where the sensors are located.

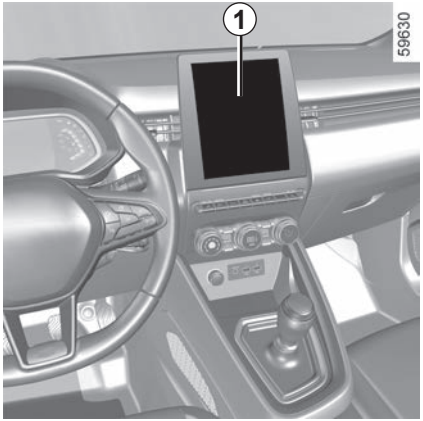

Activation/deactivation

Vehicles fitted with a multimedia screen *1*

To activate or deactivate the function, refer to the multimedia instructions.

Select “ON” or “OFF”.

Vehicles not fitted with a multimedia screen

– With the vehicle stationary, press the ***2*** switch as many times as required to reach the “Settings” world;

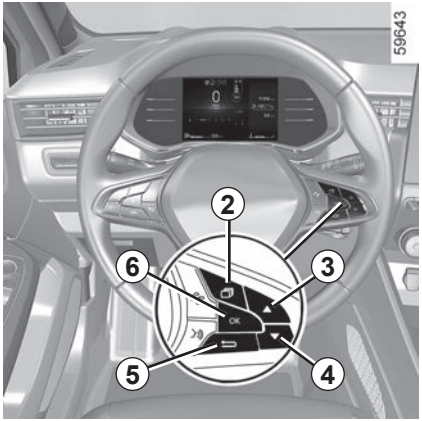

– press the ***3*** or ***4*** control repeatedly to reach the “Vehicle setting” menu. Press the switch ***6*** **OK**;

– press the ***3*** or ***4*** control repeatedly to reach the “DRIVING ASSIST” menu. Press the switch ***6*** **OK**;

– press the ***3*** or ***4*** control repeatedly to reach the “Blind spot” setting;

– press the ***6*** **OK** switch to activate or deactivate the function:

☑ function activated;

☐ function deactivated.

Press the switch ***5*** to return to the previous menu.

The system’s detection range operates according to a standard lane width.

When driving in a narrow lane, the function may warn you when a vehicle is detected further away than the nearest lane.

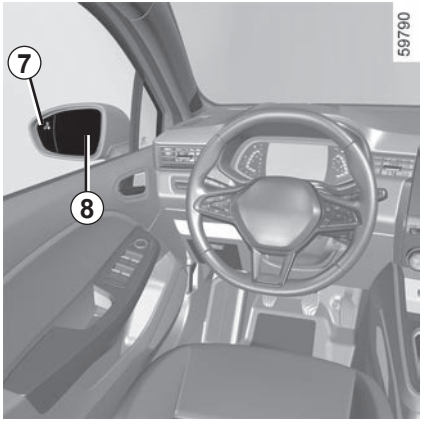

Indicator *7*

An indicator light ***7*** is located on each rear view mirror ***8***.

Note: clean the rear view mirrors ***8*** regularly so that the indicators ***7*** can be seen.

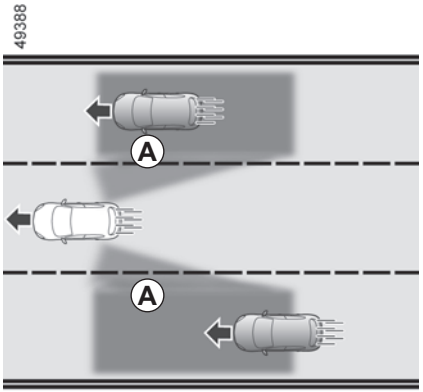

Operation

The function warns you when the speed of your vehicle is over approximately 9 mph (15 km/h) and:

– when another vehicle is in the blind spot area ***A*** and travelling in the same direction as your vehicle;

– when a vehicle approaches quickly from the rear in an adjacent lane within the range of detection area ***B***.

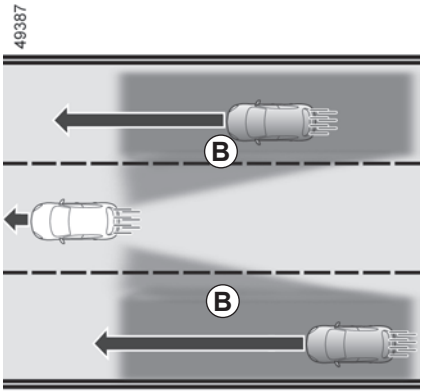

If you overtake another vehicle, the indicator ***7*** will only come on if that vehicle remains for a long enough period in your vehicle's blind spot ***A***.

The function does not notify the driver if the other vehicles are not moving.

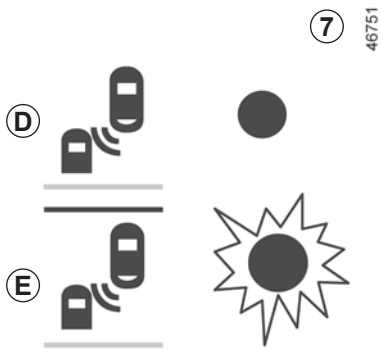

Display *D*

First warning: **direction indicator not activated**, the ***7*** warning light indicates that a vehicle is detected in the blind spot area and/or that a vehicle is rapidly approaching from the rear in an adjacent lane.

When the engine is started, the system adopts the last status saved before the ignition was switched off (refer to the previous pages).

Display *E*

Direction indicator activated, the ***7*** warning light flashes when the function detects a vehicle in the blind spot warning area and/or a vehicle is rapidly approaching from the rear on the side towards which you will turn the wheel.

If you cancel the direction indicator, the function will return to the initial warning (display ***D***).

Conditions for non-function

– When driving on a road with tight bends;

– in reverse.

If the vehicle is equipped with a towbar recognised by the system, the “Trailer: blind spot warning off” message is displayed on the instrument panel to inform you that the function is not operational.

For information on the range of equipment adapted to your vehicle, we advise you to consult an approved Dealer.

Operating faults

If the system detects a fault, the message “Check Side radars” is displayed on the instrument panel.

Consult an approved dealer.

Due to the presence of sensors behind the bumper, it is advisable to entrust any operation on the bumper (repair, replacement, paintwork, etc.) to a qualified professional.

– The system’s detection range operates according to a standard lane width. If you are driving in wide traffic lanes, the system might not be able to detect a vehicle in the blind spot.

– The system might be disrupted momentarily if it is exposed to strong electromagnetic waves (as beneath high-tension power lines) or to very poor weather conditions (heavy rain, snow etc.). Remain aware of driving conditions.

There is a risk of accidents.

This function is an additional driving aid. This function is not under any circumstances intended to replace the due care and attention of the driver, who should at all times be in control of the vehicle.

The driver should always adapt their speed to the traffic conditions, regardless of the system indications.

The system should under no circumstances be taken to be an obstacle detector or an anti-collision system.

System servicing/repairs

– In the event of an impact, radar alignment may be changed, and its operation will consequently be affected. Deactivate the function and consult an authorised dealer.

– Any work in the area where the radars are located (repairs, replacements, etc.) must be carried out by a qualified professional.

Only an authorised dealer is qualified to service the system.

System disturbance

Some conditions can disturb or damage the operation of the system, such as:

– complex surroundings (metal bridges, tunnels, roads with barriers at the edge, etc.);

– poor weather conditions (snow, hail, black ice, etc.).

Risk of false alarms or absence of warnings

In the event of the system behaving abnormally, deactivate it and consult an authorised dealer.

Limitation of the system operation

– The radar area should be kept clean and free of any modifications in order to ensure the proper operation of the system.

– Small objects moving close to the vehicle (motorcycles, bicycles, pedestrians, etc.) may not be recognised by the system.

– When turning into a bend, the radars may temporarily cease to detect vehicles in adjacent lanes.

– The function may warn you late when two other vehicles are approaching from the rear, side by side in the adjacent lanes (driving on a 3-lane road) and at a much higher speed than your vehicle.

– The system may not provide a warning when the other vehicles are travelling at a significantly different speed.

– If the vehicle is being overtaken by a long vehicle (e.g. heavy goods vehicle overtaking at a similar speed to the vehicle) the system may interrupt the warning before the end of the manoeuvre.

– The vehicle is travelling on a winding road.

Deactivating the function

You must disable the function if:

– the radar area has been damaged (rear bumper);

– the vehicle is fitted with a towbar that is not recognised by the system.

SAFE DISTANCE ALERT (1/4)

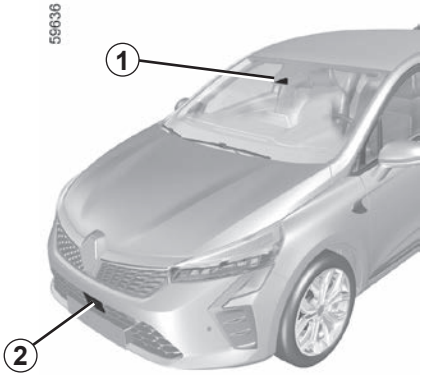

Using the information from the radar ***2*** and camera ***1***, this function informs the driver of the time interval between their vehicle and the vehicle in front so that a safe stopping distance between the two vehicles can be maintained.

The function is activated when the vehicle speed is between about 19 and 124 mph (30 and 200 km/h).

Location of the camera *1*

Make sure the windscreen is not obscured (by dirt, mud, snow, condensation etc.).

Location of the radar *2*

Ensure that the radar area is not obstructed (by dirt, mud, snow, a badly fitted front number plate), impacted, modified (including painting) or hidden by any accessory fitted on the front of the vehicle (on the grille or logo etc.).

This function is an additional driving aid.

This function is not under any circumstances intended to replace the due care and attention of the driver, who should at all times be in control of the vehicle.

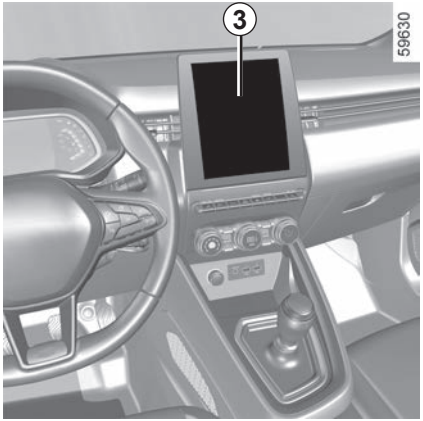

Activating/deactivating the function

Vehicles fitted with a multimedia screen *3*

To activate or deactivate the function, refer to the multimedia instructions.

Select “ON” or “OFF”.

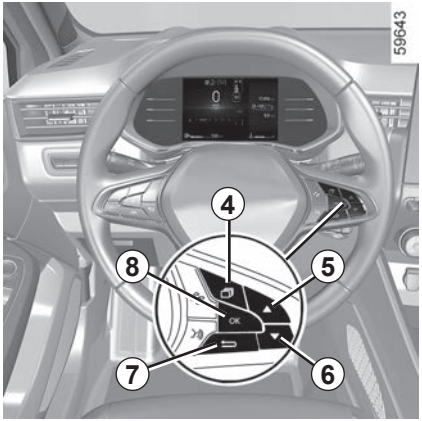

Vehicles not fitted with a multimedia screen

– With the vehicle stationary, press the ***4*** switch as many times as required to reach the “Settings” world;

– press the ***5*** or ***6*** control repeatedly to reach the “Vehicle setting” menu. Press the switch ***8*** **OK**;

– press the ***5*** or ***6*** control repeatedly to reach the “DRIVING ASSIST” menu. Press the switch ***8*** **OK**;

– press the ***5*** or ***6*** controls repeatedly to reach the “Distance warning” setting;

– press the ***8*** **OK** switch to activate or deactivate the function:

☑ function activated

☐ function deactivated

Press the ***7*** switch to return to the previous menu.

Each time the vehicle is started, the function continues the mode saved the last time the engine was stopped.

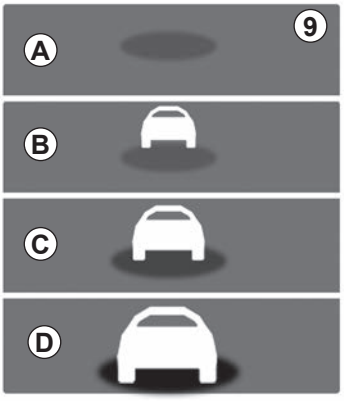

39301

Operation

With the function activated, the ***9*** indicator is displayed on the instrument panel and informs the driver of the distance between their vehicle and the vehicle in front.

– ***A*** (grey): function not operational;

– ***A*** (green): no vehicle detected;

– ***B*** (green): the time interval is greater than or equal to around two seconds (distance between the two vehicles adapted to your speed);

– ***C*** (orange): the time interval falls between around 1 and 2 seconds (insufficient distance between the two vehicles);

– ***D*** (red): the time interval is less than or equal to around one second (very insufficient distance between the two vehicles).

If the interval between the two vehicles is less than approximately 0.5 seconds, the ***9*** indicator and the ***D*** display will flash in red on the instrument panel along with “-.- s”.

Under certain conditions, the time interval may not be displayed:

– while cornering;

– when changing lane;

– if the vehicle in front is sufficiently far or outside the range of the radar or camera.

The measurement is displayed for information: the system does not carry out any action on the vehicle.

This function is not designed for use in urban conditions or for a dynamic driving style (sudden cornering, acceleration, braking, etc.), but rather for stable driving conditions.

The function does not interact with the braking system.

The radar and camera zones must be kept clean and free of any tampering in order to ensure the proper operation of the system.

Any work carried out in the area where the radar or camera is located (repairs, replacements, windscreen and/or bumper modifications, etc.) must be carried out by a qualified professional.

This function is an additional driving aid. This function is not under any circumstances intended to replace the due care and attention of the driver, who should at all times be in control of the vehicle.

System servicing/repairs

– In the event of an impact, the radar and/or camera alignment may be changed and its operation may consequently be affected. Deactivate the function and consult an authorised dealer.

– Any work carried out in the area where the radar and/or camera is located (replacements, repairs, windscreen and/or bumper modifications, etc.) must be carried out by a qualified professional.

Only an authorised dealer is qualified to service the system.

In the event of disruption to the radar area system

– obstruction of the windscreen or the radar area (by dirt, ice, snow, condensation etc.);
– a complex environment (metal bridge, tunnel etc.);
– poor weather conditions (snow, hail, black ice etc.);
– poor visibility (night, fog etc.);
– poor contrast between the vehicle preceding it and the surrounding area (e.g. white vehicle in a snowy area etc.) ;
– being dazzled (glaring sun, lights of vehicles travelling in the opposite direction etc.);
– the road is narrow, winding or undulating (tight bends etc.)

Risk of erroneous false alarms.

Using information from cameras ***1***, ***2***, and ***3*** located in the front bumper, door mirrors and on the tailgate, as well as ultrasonic detectors ***4*** located in the vehicle bumpers, the feature assists with difficult manoeuvres (e.g. parking) by displaying the vehicle surroundings.

Operation

The cameras transmit four separate views to the multimedia screen ***5***.
They enable you to view the vehicle surroundings:
– front view: using camera ***1***;
– rear view: using camera ***3***;
– bird's eye view: using cameras ***1***, ***2*** and ***3***;

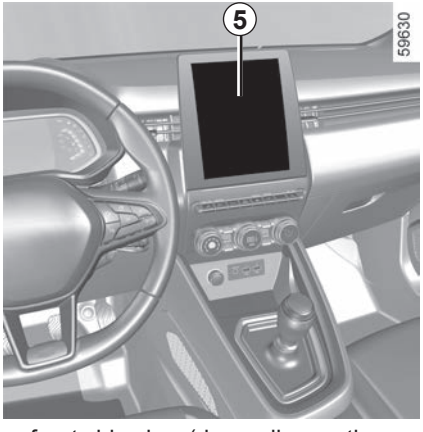

– front side view (depending on the vehicle): using camera ***2*** (passenger side).

The ultrasonic detectors detect obstacles at the front, rear and (depending on the vehicle) side of the vehicle.

Note: make sure that the cameras are not obscured (by dirt, mud, snow etc.).

This function is an additional aid. It cannot, therefore, under any circumstances replace the vigilance or the responsibility of the driver.
The driver should always be ready for sudden incidents while driving: always ensure that there are no small, narrow moving obstacles (such as a child, animal, pushchair, bicycle, stone, post, etc.) in the blind spot when manoeuvring.

Front view *1*

The view of the front camera is displayed on the multimedia screen ***5***.

Rear view *3*

The view of the rear camera is displayed on the multimedia screen ***5***.

The ***5*** multimedia screen shows a reverse image of the rear view ***3*** as in a rear view mirror.

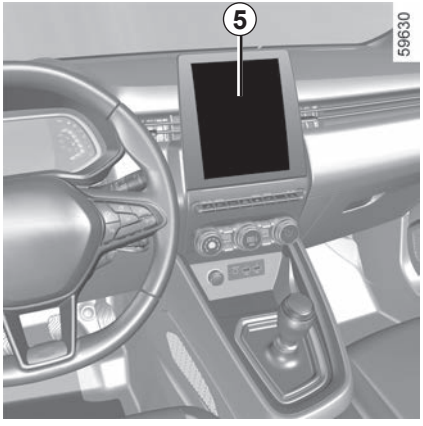

In front view or rear view: when manoeuvring on a slope, objects shown on the multimedia screen may be closer or further away than they seem.

Take this into account in order to correctly assess the distance before any manoeuvre.

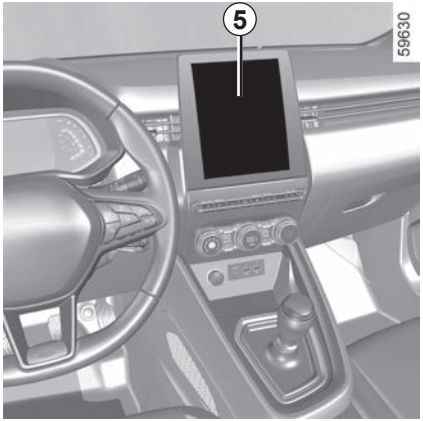

Fixed clearance gauge *6*

The “front” or “rear” view transmitted to the multimedia screen ***5*** is displayed with one or two guidelines ***6*** and ***7***.

This system is initially used with the aid of several gauges (mobile for trajectory and fixed for distance).

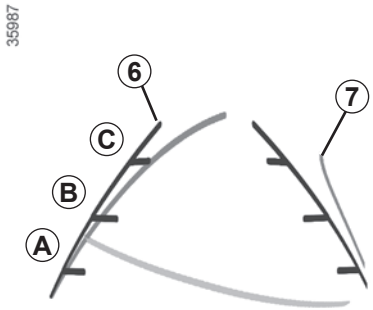

The fixed clearance gauge comprises coloured markers ***A***, ***B*** and ***C*** indicating the distance behind the vehicle:

– ***A***(red) approximately 30 centimetres from the vehicle;
– ***B***(yellow) approximately 70 centimetres from the vehicle;
– ***C***(green) approximately 150 centimetres from the vehicle.

Dynamic gauge *7* (depending on the vehicle)

This is shown in blue on the multimedia screen ***5***.

It indicates the vehicle trajectory according to the position of the steering wheel in the front and the rear view.

The front, rear and side view guidelines are a representation projected onto flat ground; this information must not be taken into account when superimposed on a vertical object or an object on the ground.

Objects displayed on the edge of the multimedia screen may appear distorted.

In very bright light (snow, vehicle in sunshine etc.), the camera vision may be adversely affected.

In the combined representation from the cameras:

– raised objects (pavement, vehicle, etc.) may appear distorted in bird’s eye view;
– any objects on top of the vehicle are not displayed.

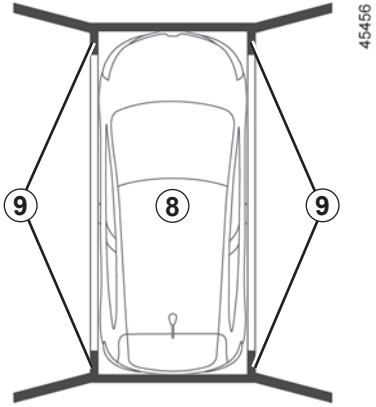

Bird's eye view

The bird's eye view is a combined representation from cameras ***1***, ***2*** and ***3***.

It displays a view of the top of the vehicle and its surroundings.

This can be used to confirm a view of the vehicle position in relation to its immediate surroundings (front, rear and side).

The ***8*** view indicates the vehicle position. ***9*** areas not covered by the cameras are indicated in black.

In "bird's eye view" mode, the objects displayed on the multimedia screen are actually further away than they seem.

Take this into account in order to correctly assess the distance before any manoeuvre.

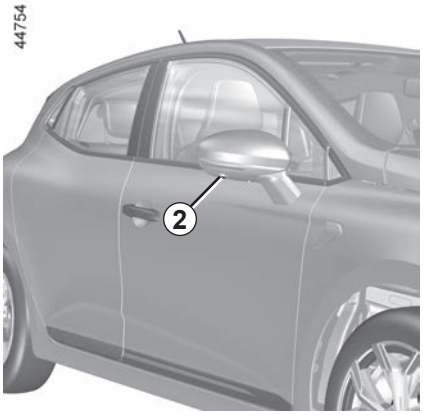

Front side view on passenger side *2*

(depending on the vehicle)

The camera, fitted in the door mirror, transmits a side view to the multimedia screen ***5***.

Depending on the vehicle, you can use the multimedia screen to change the bird's eye view to the front side view.

Please refer to the multimedia instructions for further information.

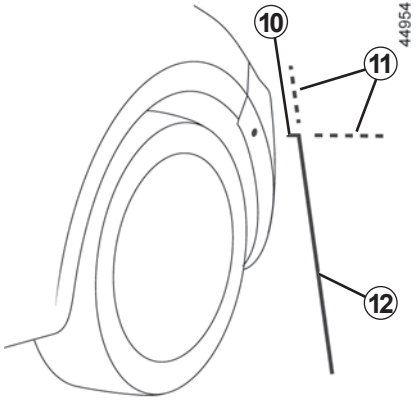

The “Front side view on passenger side” is transmitted to the multimedia screen with fixed guidelines to measure the distances.

Fixed guidelines *10*, *11* and *12*

Fixed guideline ***10*** shows the front section of the vehicle.

Fixed guideline ***12*** shows the vehicle width including door mirrors.

Fixed guidelines ***11*** are shown in green and dotted.

These are extensions of fixed guidelines ***10*** and ***12***.

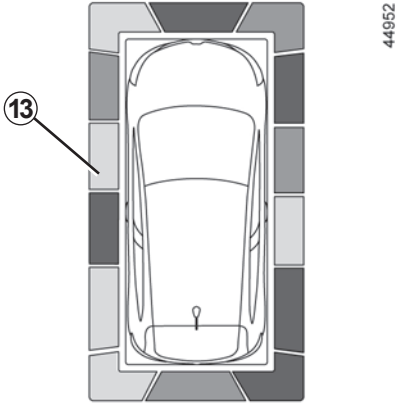

Depending on the vehicle, you can use the multimedia screen to change the bird’s eye view to the front side view.

Please refer to the multimedia instructions for further information.

Obstacle detection

While the system is activated, if the “Park Assist” function detects one or more obstacles around the vehicle, the ***13*** indicator lines display:

– on the bird’s eye view;

– on the front side view on the passenger side (depending on the vehicle).

In addition to the sound alert, these indicator lines show the proximity of obstacles via different colours:

– Green: obstacle between approximately 50 and 70 cm;

– Yellow: obstacle between approximately 30 and 50 cm;

– Red: obstacle within approximately 30 cm.

These indicator lines also show the location where the obstacles are detected, as indicated by their positions in relation to the “vehicle” symbol.

For more information ➥ 2.133.

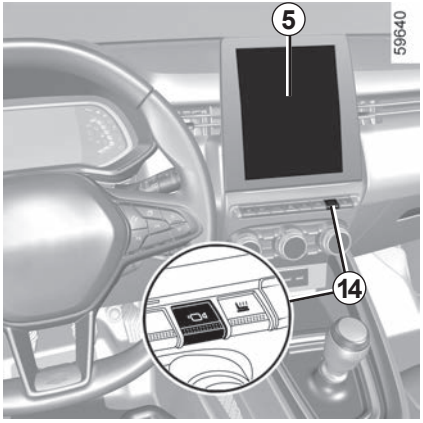

Activation/deactivation

Automatic mode

With the ignition switched on, automatic mode is activated when reverse gear is engaged.

The rear view and the bird's eye view appear on the ***5*** multimedia screen.

When the reverse gear is quickly shifted to forward gear, the rear view and bird's eye view are replaced by the front view and bird's eye view on the ***5*** multimedia screen.

Automatic mode is disabled:

– when the gear lever is in neutral (manual gearbox) or in position **N** or **P** (automatic gearbox) for approximately three seconds;

– when the vehicle speed moving forward exceeds 6 mph (10 km/h).

Manual mode

To activate manual mode, with the vehicle stopped and the engine running, press the ***14*** switch: the front view and bird's eye view appear on the multimedia screen.

Manual mode is disabled:

– when the vehicle speed moving forward reaches 6 mph (10 km/h);

– when the gear lever has not been used for approximately three minutes;

– when you press the ***14*** button.

– Do not use this function while the door mirrors are in folded position.

– Ensure that the luggage compartment door is properly closed before using the function.

– Do not place any objects on or in front of the cameras.

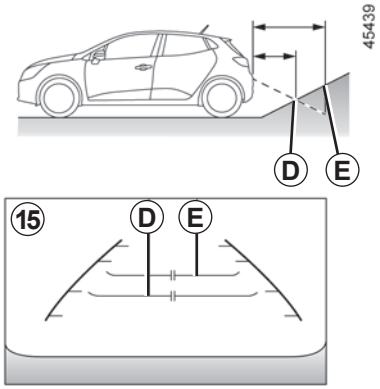

Difference between the estimated distance and actual distance

Driving or reversing towards a steep uphill slope

The fixed guidelines ***15*** show the distances as closer than they actually are.

The objects shown on the screen are actually further away on the slope.

For example, if the screen displays an object at ***D***, the actual distance of the object is at ***E***.

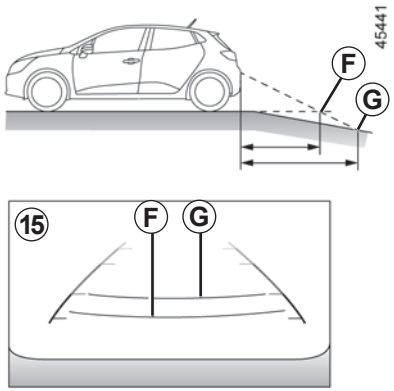

Driving or reversing towards a steep downhill slope

The fixed guidelines ***15*** show the distances as further than they actually are.

Therefore, the objects shown on the screen are actually closer on the slope.

For example, if the screen displays an object at ***G***, the actual distance of the object is at ***F***.

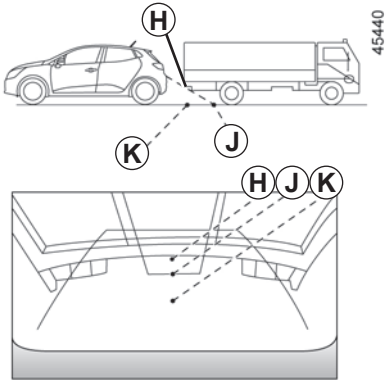

Driving or reversing towards a protruding object

Position ***H*** seems further than position ***J*** on the screen.

However, position ***H*** is at the same distance as position ***K***.

The trajectory indicated by the fixed and mobile guidelines do not take into account the height of the object.

So there is a risk that the vehicle may collide with the object when reversing towards position ***K***.

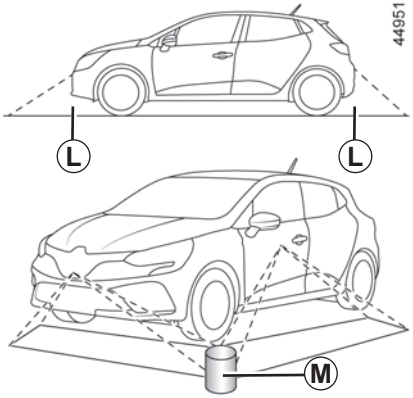

Limitations of system operation

The system is unable to display objects located in certain areas.

In the front or rear view mode, the system cannot be used to view an object in area ***L***.

In bird's eye view mode, the system cannot be used to view a large object in area ***M*** (near the edge of the displayed area).

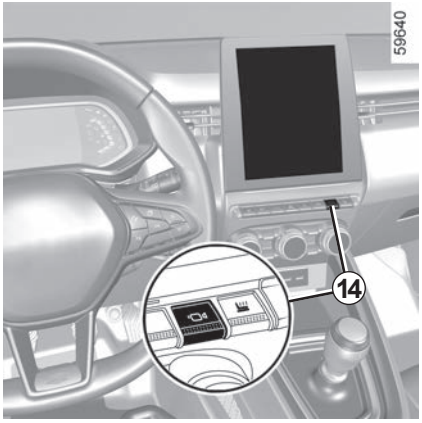

Adjusting the display

With the ignition on, press the ***14*** switch or move the selection lever to position **R** (on an automatic gearbox) or to reverse gear (on a manual gearbox) in order to use the feature.

The function displays different views on the screen according to the gear lever position.

Depending on the vehicle, you can select the "bird's eye view" or "front side view on the passenger side".

For safety reasons, carry out any adjustments when the vehicle is not being driven.

If the gear lever is in position R (on an automatic gearbox) or in reverse (on a manual gearbox), the following views are available:

– screen split between the rear view/ bird's eye view;

or

– screen split between the rear view/ front side view (depending on the vehicle).

When shifting from reverse gear to position **P** (on an automatic gearbox) or to neutral position (on a manual gearbox), the following views are available:

– screen split between the rear view/ bird's eye view;

or

– screen split between the rear view/ front side view (depending on the vehicle).

When shifting from reverse gear to position **D** (on an automatic gearbox) or into a gear (on a manual gearbox), the following views are available:

– screen split between the front view/ bird's eye view;

or

– screen split between the front view/ front side view (depending on the vehicle).

Adjusting the camera settings

The following settings can be modified:

– brightness;

– colours;

– contrast.

Please refer to the multimedia instructions for further information.

Note: for safety reasons, the views are not displayed in the "Settings" menu while the vehicle is moving.

ACTIVE EMERGENCY BRAKING (1/8)

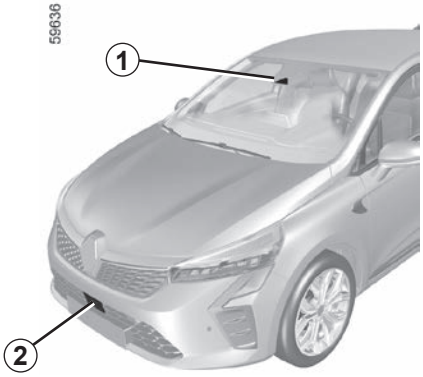

The system uses information from the radar ***2*** and the camera ***1*** to determine the distance from your vehicle:

– from the vehicle ahead in the same lane;

or

– surrounding pedestrians and cyclists.

The system informs the driver if there is a risk of head-on collision to enable appropriate emergency manoeuvres (pressing the brake pedal and/or turning the steering wheel).

Depending on the reactivity of the driver, the system can assist with braking in order to limit damage or prevent a collision.

Note: ensure that the windscreen and front bumper are not obstructed (by dirt, mud, snow, condensation, number plate, etc.).

Location of the camera *1*

Make sure the windscreen is not obscured (by dirt, mud, snow, condensation etc.).

Location of the radar *2*

Ensure that the radar area is not obstructed (by dirt, mud, snow, a badly fitted front number plate), impacted, modified (including painting) or hidden by any accessory fitted on the front of the vehicle (on the grille or logo etc.).

This system can apply maximum braking to the vehicle until it is completely stationary if necessary.

For safety reasons, always wear your seat belt when travelling in your vehicle and make sure that it is loaded so that no items can be thrown forward and hit the occupants.

This function is an additional driving aid.

This function is not under any circumstances intended to replace the due care and attention of the driver, who should at all times be in control of the vehicle.

Operation

Detection of vehicles

When driving, in the event of a risk of collision with the vehicle in front the system will:

– **warns you of a collision risk:**

when the vehicle speed is between approximately 4 mph (7 km/h) and 106 mph (170 km/h), the “Brake” message is displayed in red on the instrument panel ***3*** accompanied by a beep.

If the driver depresses the brake pedal and the system still detects a risk of collision, the brake force is increased.

– **may trigger braking:**

when the vehicle speed is below approximately 75 mph (120 km/h), if the driver does not respond to the warning and a collision is imminent.

59676

If active emergency braking has caused the vehicle to stop, the vehicle is kept stationary for a short time.

Beyond this time limit, the vehicle must be held stationary by the driver keeping their foot on the brake pedal.

Note: if the driver uses the vehicle controls (steering wheel, pedals, etc.) the system may delay certain operations or not activate.

Special features of warnings

Depending on the speed, the warning and braking may be activated simultaneously.

Special features of stationary vehicles

Stationary vehicles are detected when your vehicle is being driven at a speed between approximately 4 mph (7 km/h) and 50 mph (80 km/h).

The system is not active and does not emit a warning for stationary vehicles when you exceed approximately 50 mph (80 km/h).

In the event of emergency manoeuvre, you can stop braking at any moment by:

– tapping the accelerator pedal;

or

– turning the steering wheel as a collision avoidance manoeuvre.

Detection of pedestrians and cyclists
(depending on the vehicle)

When driving at a speed between approximately 4 mph (7 km/h) and 50 mph (80 km/h), if there is a risk of collision with a cyclist or a pedestrian, the system:

– **warns you of a collision risk:**

  the warning light appears in red, or, depending on the vehicle, the ***3*** symbol is displayed and the "Brake" message appear on the instrument panel, accompanied by a beep.

  If the driver presses the brake pedal and the system still detects a risk of collision, the braking force may be increased if it is not sufficient to prevent the collision.

– **may trigger braking:**

  if the driver fails to react following the alert and collision becomes imminent.

59676

If active emergency braking has caused the vehicle to stop, the vehicle is kept stationary for a short time.

Beyond this time limit, the vehicle must be held stationary by the driver keeping their foot on the brake pedal.

Note: if the driver uses the vehicle controls (steering wheel, pedals, etc.) the system may delay certain operations or not activate.

Special features of warnings

Depending on the speed, the warning and braking may be activated simultaneously.

In the event of emergency manoeuvre, you can stop braking at any moment by:

– tapping the accelerator pedal;

or

– turning the steering wheel as a collision avoidance manoeuvre.

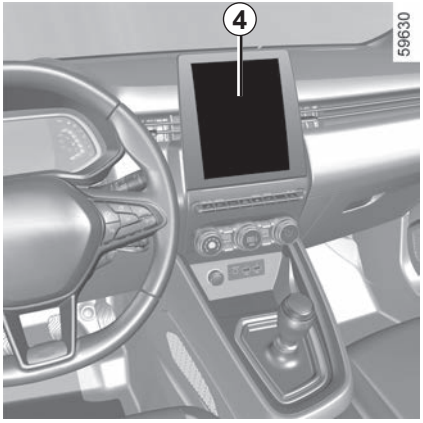

Activating or deactivating the system

Vehicles fitted with a multimedia screen *4*

To activate or deactivate the function, please refer to the multimedia instructions.

Select “ON” or “OFF”.

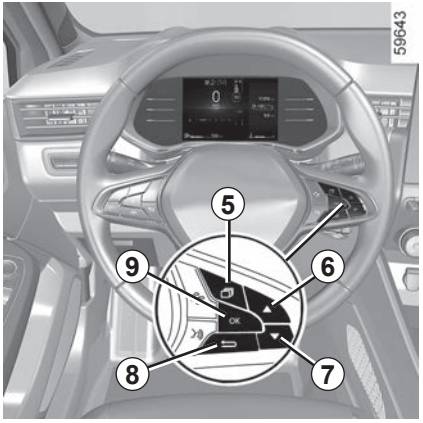

For vehicles not fitted with a multimedia screen

– With the vehicle stationary, press the ***5*** switch as many times as required to reach the “Settings” world;

– press the ***6*** or ***7*** control repeatedly to reach the “Vehicle setting” menu. Press the switch ***9*** **OK**;

– press the ***6*** or ***7*** control repeatedly to reach the “DRIVING ASSIST” menu. Press the switch ***9*** **OK**;

– press the ***6*** or ***7*** control repeatedly to reach the “Active braking” setting and press the ***9*** **OK** switch;

– press the ***9*** **OK** switch to activate or deactivate the function:

☑ function activated;

☐ function deactivated.

Upon deactivation of the system, the OFF warning light illuminates or, depending on the vehicle, the OFF warning light illuminates on the instrument panel.

Press the ***8*** switch to return to the previous menu.

This system is reactivated each time the ignition is switched on.

Temporarily not available

If the system detects a temporary fault the warning light illuminates, or depending on the vehicle the warning light illuminates on the instrument panel.

The possible causes are:

– the system is temporarily blinded (glare from the sun, dipped beam headlights, bad weather conditions etc.). The system will be operational again when visibility conditions are better;

– the system is temporarily interrupted (e.g. the windscreen, front bumper grille or logo is obscured by dirt, mud, snow, condensation, etc.). In this case, park the vehicle and switch off the engine. Clean the windscreen, the front bumper or the logo. The next time the engine is started, after five or ten minutes of driving, the warning light and the message disappear.

If this is not the case, this may arise from another cause; contact an Approved Dealer.

Operating faults

When the function detects an operating fault, the and warning lights, or (depending on the vehicle) appear in yellow on the instrument panel accompanied by one of the following messages: “Check Front camera” or “Front radar to check” or “Check Camera/Radar”.

Consult an approved dealer.

Active emergency braking

This function is an additional driving aid.

This function is not under any circumstances intended to replace the due care and attention of the driver, who should at all times be in control of the vehicle.

The triggering of this function may be delayed or prevented when the system detects clear signs of control of the vehicle by the driver (action on the steering wheel, pedals etc.).

The system cannot be activated:

– when the gearbox lever is in neutral or the clutch pedal has been depressed during approximately ten seconds;

– when the parking brake is activated;

– when the Electronic Stability Program (ESC) has started.

System servicing/repairs

– In the event of an impact, the radar and/or camera alignment may be changed and its operation may consequently be affected. Deactivate the function and consult an authorised dealer.

– Any work in the area where the radar and/or camera is located (repairs, replacements, windscreen modifications, etc.) must be carried out by a qualified professional.

Only an authorised dealer is qualified to service the system.

System disturbance

Some conditions can disturb or damage the operation of the system, such as:
- a complex environment (metal bridge, tunnel etc.);
- poor weather conditions (snow, hail, black ice etc.);
- poor visibility (night, fog etc.);
- poor contrast between the object (vehicle, pedestrian etc.) and the surrounding area (e.g. pedestrian dressed in white located in a snowy area etc.);
- being dazzled (glaring sun, lights of vehicles travelling in the opposite direction etc.);
- obstruction of the windscreen or the radar area (by dirt, ice, snow, condensation etc.);
- ...

In these conditions, the system may not react, may warn the driver or may brake inadvertently.

Limitation of the system operation

- Each time the vehicle is started, the system carries out a calibration according to the vehicle surroundings and may be inactive for a length of time between approximately two and five minutes;
- A vehicle travelling in the opposite direction will not trigger any alert or affect operation of the system;
- The radar and camera zones must be kept clean and free of any tampering in order to ensure the proper operation of the system;
- the system may not respond to small vehicles such as motorbikes as effectively as to other vehicles;
- the system may not operate properly when the road surface is slippery (rain, snow, black ice, etc.);
- to ensure correct operation, the system needs to distinguish the complete outline of the pedestrian. So the system cannot detect:
  - pedestrians in the darkness or in poor lighting conditions;
  - partially visible pedestrians:
  - pedestrians less than approximately 80 cm tall;
  - pedestrians carrying large objects;
  - ...

In these conditions, the system may not react, may warn the driver or may brake inadvertently.

Deactivating the function

You must disable the function if:

– the area of the camera has been damaged (e.g. on the inside or outside of the windscreen);

– the front of the vehicle was damaged (impact, scratch on the radar, etc.);

– the vehicle is being towed (breakdowns);

– the windscreen is cracked or distorted (do not carry out windscreen repairs in this area; have it changed by an approved dealer);

– you are not driving on a paved road.

In the event of the system behaving abnormally, deactivate it and consult an authorised dealer.

Halting the function

You can halt the active emergency braking function at any time by tapping the accelerator pedal or by turning the steering wheel in an avoidance manoeuvre.

DETECTION OF ROAD SIGNS (1/4)

The system detects speed limit signs on the side of the road and displays the speed limit on the instrument panel.

It mainly uses information taken from the camera ***1***, attached to the windscreen behind the rear view mirror.

Note: make sure the windscreen is not obscured (dirt, mud, snow, condensation etc.).

For vehicles which are equipped with it, the system also uses information from the navigation system.

Once the speed limiter is activated, you can adjust the speed limiter indication displayed by the system.

If the limit speed is exceeded, the display panel is modified to warn the driver.

For vehicles equipped with a navigation system and if the vehicle is travelling in a country where the speed units differ from those of the vehicle, the system displays the speed limit sign in the unit of the country, alongside the speed limit converted to the unit used by the vehicle's instrument panel.

For countries where the speed limit is reduced during rainy weather on some types of roads, on vehicles equipped with a navigation system, the system can modify the limited speed after a few seconds of wiping the windscreen.

Special situations

The system does not take into account exceptional speed limit measures, such as peak pollution days.

Activating/deactivating the system

Vehicles fitted with a multimedia screen *2*

To activate or deactivate the function, refer to the multimedia instructions.

Select “ON” or “OFF”.

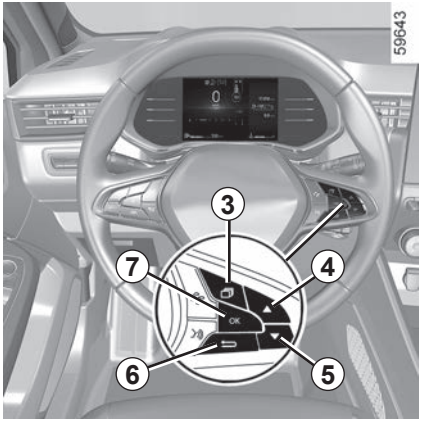

With the function activated, depending on local regulations, you can activate the “Display risk areas” option.

The system will notify you of the distance separating you from this zone, and while you are travelling in the zone.

Vehicles not fitted with a multimedia screen

– With the vehicle stationary, press the ***3*** switch as many times as required to reach the “Settings” world;
– press the ***4*** or ***5*** control repeatedly to reach the “Vehicle setting” menu and press ***7*** **OK**;
– press the ***4*** or ***5*** control repeatedly to reach the “DRIVING ASSIST” menu and press ***7*** **OK**;
– press the ***4*** or ***5*** controls repeatedly to reach the “Speed alert” setting;
– press the ***7*** **OK** switch to activate or deactivate the function:

☑ function activated

☐ function deactivated

Press the ***6*** switch to return to the previous menu.

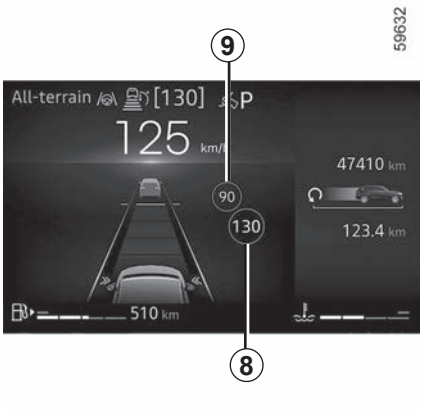

Operation

Warning lights

The function displays the following warning lights:

8 Speed limit road signs.

9 Additional road signs (start or end of “No overtaking” zone, slip road speed limit, speed in case of a caravan, speed limit with length of application, etc.).

If the speed limit is exceeded, the circle around the panel flashes (***7*** warning light) along with a sound signal to warn the driver.

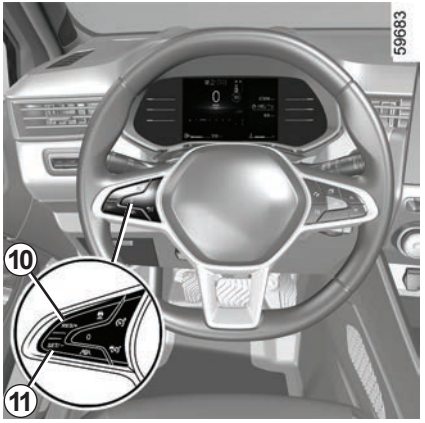

Varying the limit speed

If the speed limit notification differs from the detected speed value, press and hold the following switches:

– ***10*** (**RES/+**) to increase the notification speed to the detected speed;

– ***11*** (**SET/-**) to reduce the notification speed to the detected speed.

Operating faults

The system cannot detect the speed limit if:

– the windscreen is not clean;

– the camera is blinded by the sun;

– there is insufficient visibility (night, fog etc.);

– the signs are not legible (snow, etc.) or are hidden (by another vehicle or by trees);

– the information taken from the navigation system is not up to date.

This function is an additional driving aid.

This function is not under any circumstances intended to replace the due care and attention of the driver, who should at all times be in control of the vehicle.

The driver should always adapt their speed to the traffic conditions, regardless of the system indications.

The system detects speed limit signs and does not detect other signs (e.g. entry/exit to/from urban areas, etc.).

The system may not detect all speed limit signs or may interpret them incorrectly.

The driver should not ignore signs that are not detected by the system and should, as a priority, comply with the traffic signage and the highway code.

In the event of poor visibility (fog, snow, frost, etc.), it is possible that the system may not indicate the correct speed to the driver.

The driver should always adapt their speed to the traffic conditions, regardless of the system indications.

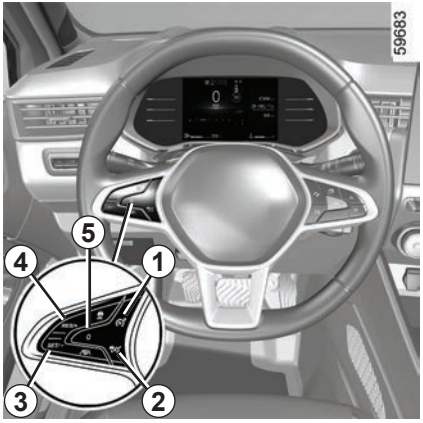

The speed limiter function helps you stay within the driving speed limit that you choose, known as the **limit speed**.

Controls

1 Start/stop speed limiter switch .

2 Cruise control On/Off switch .

3 Speed limiter activation and speed reduction (**SET/-**).

4 Speed limiter activation and speed increase or recall of memorised limit speed (**RES/+**).

5 Speed limiter function standby (with limited speed memory) (**O**).

You can link the speed limiter to the “Road sign detection” function. ➥ 2.90.

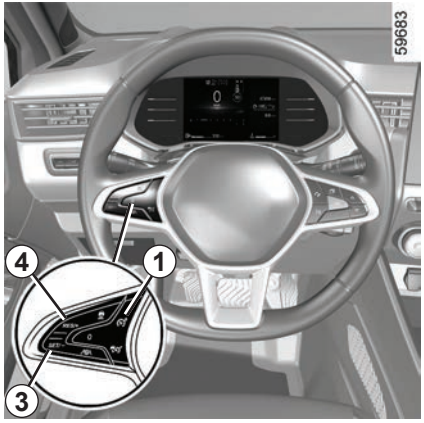

Driving

When a limit speed has been set but not yet reached, driving is similar to driving a vehicle without the speed limiter function.

Once you have reached the stored speed, no effort on the accelerator pedal will allow you to exceed the programmed speed except in an emergency (refer to information on “Exceeding the limit speed”).

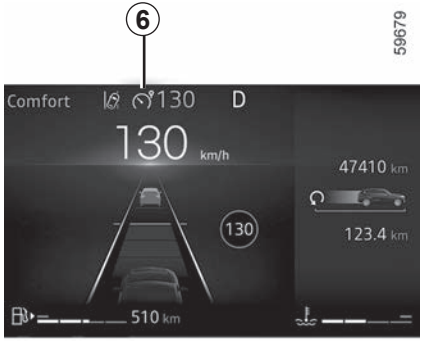

Switching on

Press the switch ***1***.

The ***6*** warning light appears in grey.

The “Speed limiter ON” message appears on the instrument panel accompanied by dashes to indicate that the speed limiter function is in operation, waiting to store a limit speed.

To store the current speed, press the ***4*** switch (**RES/+**) or the ***3*** switch (**SET/**): the limit speed replaces the dashes and, depending on the vehicle, the ***6*** warning light appears in white.

The minimum stored speed is 20 mph (30 km/h).

Varying the limit speed

The limit speed may be changed by pressing repeatedly or holding down:

– switch ***4*** (**RES/+**) to increase speed;

– switch ***3*** (**SET/-**) to reduce speed.

Exceeding the limit speed

It is possible to exceed the limit speed at any moment.

To do this, press **firmly and fully** the accelerator pedal (beyond the kick-down point).

While the speed is being exceeded, the speed limiter flashes red on the instrument panel.

Then, release the accelerator pedal: the speed limiter function will return as soon as you reach a speed lower than the memorised speed.

If the speed limiter is not available (after several attempts to activate), contact an approved dealer.

Limited speed cannot be maintained

When driving down a steep gradient, the system may not maintain the limit speed: the limit speed flashes in red on the instrument panel and an audible signal sounds at regular intervals to inform you of this situation.

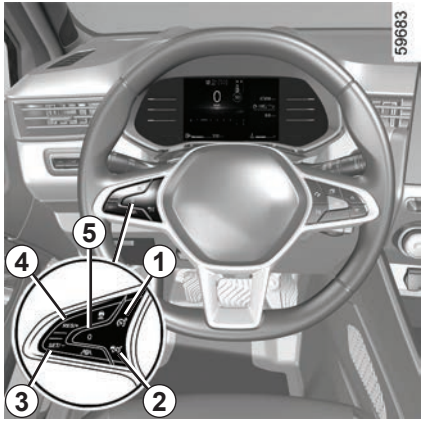

Putting the function on standby

The speed limiter function is suspended when you press switch ***5*** (**O**).

The limit speed is stored and displayed in grey on the instrument panel.

Recalling the limit speed

If a speed has been stored, it can be recalled by pressing the ***4*** switch.

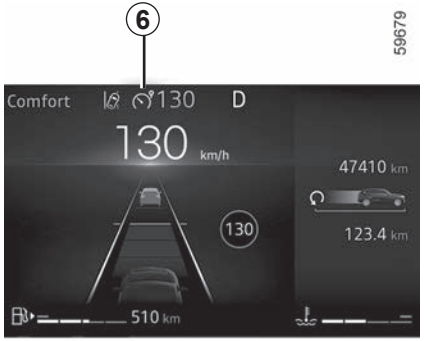

When the speed limiter is set to standby, pressing the ***3*** switch re-activates the function without taking into account the memorised speed: the speed at which the vehicle is moving is taken into account.

Switching off the function

The speed limiter function is interrupted:

– when you press the ***1*** switch. In this case, the speed is no longer stored;

– when you press the ***2*** switch. In this case the cruise control is selected and there is no stored speed.

The warning light ***6*** disappears from the instrument panel to confirm that the function is no longer active.

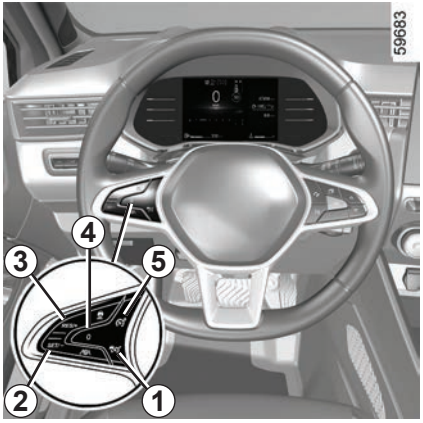

The cruise control function helps you to maintain your driving speed at a speed that you choose, called the **cruising speed.**

This cruising speed may be set at any speed above 19 mph (30 km/h).

Controls

1 Cruise control On/Off switch .

2 Switch to activate and decrease cruising speed (**SET/-**).

3 Switch to activate and increase cruising speed or to recall the memorised cruising speed (**RES/+**).

4 Switch the function to standby (with cruising speed saved) (**O**).

5 Start/stop speed limiter switch .

This function is an additional driving aid.

It can under no circumstances replace the driver's responsibility to respect speed limits or to be vigilant.

The driver must always be in control of the vehicle.

Cruise control must not be used in heavy traffic, on winding or slippery roads (black ice, aquaplaning, gravel) and during bad weather (fog, rain, side winds etc.).

There is a risk of accidents.

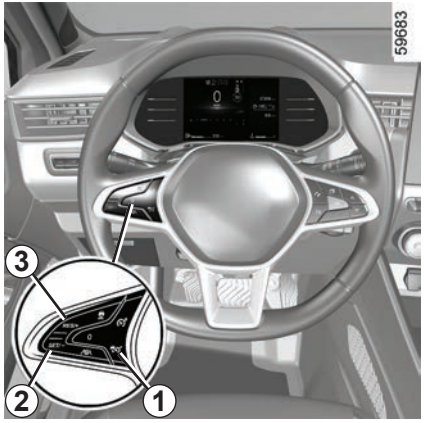

Switching on

Press switch ***1***.

The ***6*** warning light appears in grey.

The “Cruise control ON” message appears on the instrument panel accompanied by dashes to indicate that the cruise control function is in operation and waiting to memorise a cruising speed.

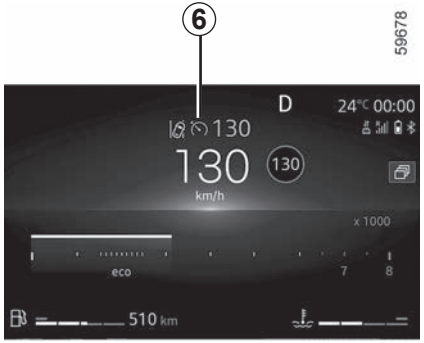

Activating cruise control

While the vehicle is moving a steady speed above approximately 19 mph (30 km/h), press the ***2*** (**SET/-**) switch or the ***3*** (**RES/+**) switch : the function is activated and the current speed is taken into account.

The cruising speed replaces the dashes. Cruise control is confirmed when the memorised speed and warning light appear in green ***6***.

If you try to activate the function below 19 mph (30 km/h), the message “Invalid Speed” will be displayed and the function will remain inactive.

Driving

Once a cruising speed is registered and the cruise control function is active, you may lift your foot off the accelerator pedal.

Please note that you must keep your feet close to the pedals in order to react in an emergency.

Adjusting the cruising speed

The cruising speed may be changed by pressing the following repeatedly:

– the ***2*** switch (**SET/-**) to reduce the speed;

– the ***3*** switch (**RES/+**) to increase the speed.

Note: press and hold one of the switches to modify speed by successive increments.

Exceeding the cruising speed

The cruising speed may be exceeded at any time by depressing the accelerator pedal.

While it is being exceeded, the cruising speed flashes in red on the instrument panel.

Then, release the accelerator pedal: after a few seconds, the vehicle will automatically return to its set cruising speed.

Cruising speed cannot be maintained

When driving down a steep gradient, the system may be unable to maintain the cruising speed: the memorised speed will flash in red on the instrument panel and an audible signal sounds at regular intervals to inform you of this situation.

If the cruise control is no longer available (after several attempts to activate it), contact an Approved Dealer.

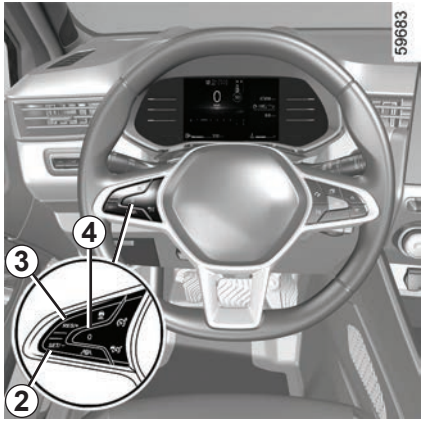

Putting the function on standby

The function is set to standby if you:

– ***4*** switch (**O**);

– the brake pedal;

– the clutch pedal or shifting to neutral if the vehicle has an automatic gearbox;

– depending on the vehicle, the clutch pedal for a prolonged period or upon prolonged neutral position.

The cruising speed is stored and displayed in grey on the instrument panel.

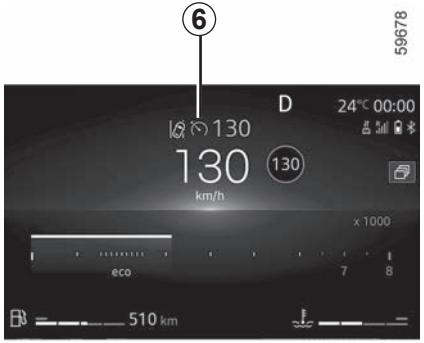

Returning to the cruising speed

If a speed is stored, it can be recalled, once you are sure that the road conditions are suitable (traffic, road surface, weather conditions, etc.).

Press the switch ***3*** (**RES/+**) if the vehicle speed is above 19 mph (30 km/h).

When the speed is stored, cruise control activation is confirmed by the display in green of the cruising speed and, depending on the vehicle, the ***6*** warning light is displayed.

NB: if the speed previously stored is much higher than the current speed, the vehicle will accelerate more rapidly to reach this threshold.

When the cruise control is set to standby, pressing switch ***2*** (**SET/-**) reactivates the cruise control function without taking into account the stored speed: it is the speed at which the vehicle is moving that is taken into account.

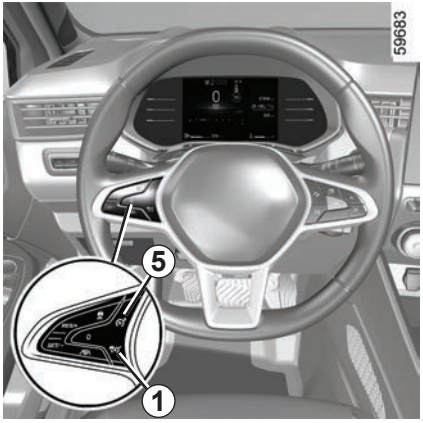

Switching off the function

The cruise control function is interrupted:

– when you press the ***1*** switch. In this case, the speed is no longer stored;

– when you press the ***5*** switch. In this case the speed limiter is selected and there is no stored speed.

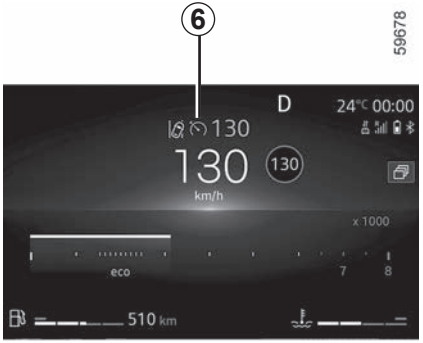

The warning light ***6*** disappears from the instrument panel to confirm that the function is no longer active.

Putting the cruise control on standby or switching it off does not cause a rapid reduction in speed: you must brake by depressing the brake pedal.

Based on information from a radar or camera, the adaptive cruise control function (or Stop and Go adaptive cruise control function on vehicles equipped with an automatic gearbox) enables you to maintain the speed selected (known as cruising speed) while keeping a following distance with the vehicle in front in the same lane.

On vehicles fitted with an automatic gearbox, if the vehicle in front stops, the Stop and Go adaptive cruise control function may apply the vehicle brakes to a full-stop before allowing the vehicle to move-on.

The system controls acceleration and deceleration of your vehicle using the engine and braking system.

The system's maximum range is approximately 150 metres. This may vary according to the road conditions (ground relief, weather conditions, etc.).

According to conditions on the road (traffic, weather etc.), the adaptive cruise control function can be activated:

– 0 mph (0 km/h) to 105 mph (170 km) for vehicles fitted with an automatic gearbox;

– 19 mph (30 km/h) to 105 mph (170 km) for vehicles fitted with a manual gearbox.

The function is indicated by the symbol.

Note:

– the driver must observe the maximum speed limit and safe distances in the country where they are driving;

– the adaptive cruise control can brake the vehicle up to a third of the braking capacity. Depending on the situation, the driver may need to brake harder.

The adaptive cruise control does not trigger an emergency stop and its braking capability is limited.

This function is an additional driving aid.

It can under no circumstances replace the driver's responsibility to respect speed limits and safe distances or to be vigilant.

The driver must always be in control of the vehicle.

The driver must always adapt their speed according to the surroundings and traffic conditions.

The adaptive cruise control must only be used on a motorway (or multi-lane road separated by a barrier).

The cruise control must not be used in heavy traffic, on winding or slippery roads (black ice, aquaplaning, gravel) or during bad weather (fog, rain, side winds etc.).

There is a risk of accidents.

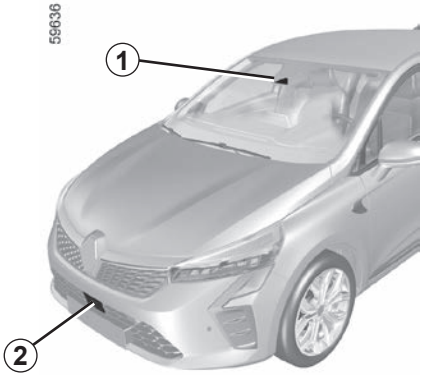

Location of the camera *1*

Make sure the windscreen is not obscured (by dirt, mud, snow, condensation etc.).

Location of the radar *2*

Ensure that the radar area is not obstructed (dirt, mud, snow, a badly fitted/attached front number plate), impacted, modified (including paintwork) or hidden by any accessory fitted on the front of the vehicle (on the grille or logo etc.).

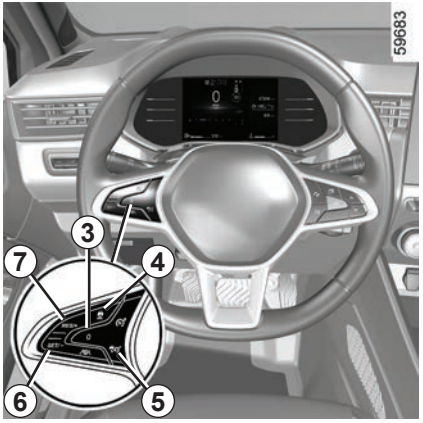

Controls

3 Switch the function to standby (with cruising speed saved) (**0**).

4 Safe distance settings.

5 Adaptive cruise control main stop/start switch .

6 Cruising speed activation, storage and decrease switch (**SET/-**).

7 Switch to activate and increase cruising speed or to recall the memorised cruising speed (**RES/+**).

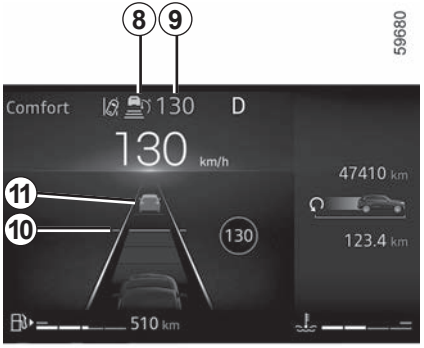

Displays

8 Adaptive cruise control warning light.

9 Stored cruising speed.

10 Stored safe distance

11 Vehicle in front.

The radar and camera zones must be kept clean and free of any tampering in order to ensure the proper operation of the system.

Switching on

Press switch ***5***.

The ***8*** warning light appears in grey and the “Adaptive Cruise Control ready to restart” message appears on the instrument panel accompanied by dashes to indicate that the function is in operation and waiting to store a cruising speed.

This function cannot be activated when:

– the parking brake is applied;

– the Park Assist function is already activated ➥ 2.143.

The message “Adaptive Cruise Ctl unavailable” is displayed on the instrument panel.

Activating cruise control

When the vehicle is stationary (vehicles equipped with an automatic gearbox) or when the vehicle is moving at a steady speed (all vehicles), press the ***6*** (**SET/-**) or ***7*** (**RES/+**) switch to activate the function and store the current speed.

The minimum cruising speed is 19 mph (30 km/h).

The cruising speed ***9*** replaces the dashes and the ***8*** warning light and the cruising speed are displayed in green to confirm that the cruise control function is in operation.

If you try to activate the function when the vehicle speed is over 105 mph (170 km) or below 19 mph (30 km/h) for vehicles fitted with a manual gearbox, the message “Invalid Speed” is displayed and the function is not activated.

Once a cruising speed is memorised and the cruise control function is active, you may lift your foot off the accelerator pedal.

Special feature on vehicles with an automatic gearbox: if the vehicle speed is below approximately 19 mph (30 km/h), the cruising speed will automatically be set to 19 mph (30 km/h). The vehicle will accelerate until it reaches the stored cruising speed.

Important: you should keep your feet near the pedals at all times to prepare for any event.

Safe distance control activation

As soon as cruise control is activated, the default safe distance ***10*** is displayed in green on the instrument panel.

The default safe distance corresponds to approximately two seconds (see following pages).

If the system detects a vehicle in your lane, an outline of a vehicle ***11*** appears above the distance gauge ***10*** on the instrument panel.

Your vehicle adapts its speed to that of the vehicle in front and applies the brakes if necessary (the brake lights come on) in order to maintain the distance displayed on the instrument panel.

Note: the size of the ***11*** outline varies according to the distance separating you from the vehicle in front. The larger the outline, the closer the vehicle in front.

Setting the cruising speed

You can vary the speed by repeatedly pressing (for a small variation) or pressing and holding (for a larger variation) switch ***6*** or ***7***:

– use the (**SET/-**) switch ***6*** to reduce the speed;

– use the (**RES/+**) switch ***7*** to increase the speed.

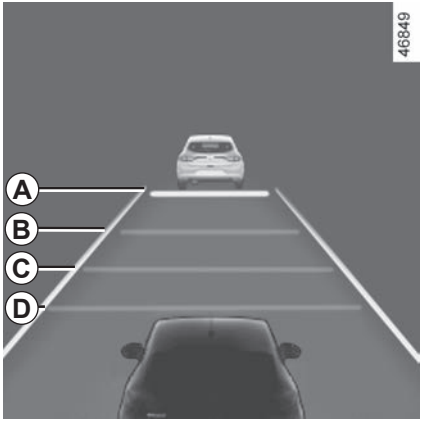

Adjusting the following distance

You can vary the safe distance from the vehicle in front at any time by pressing switch ***4*** repeatedly.

The horizontal distance gauge on the instrument panel indicates the various available safe distances:

– distance gauge ***A***: long distance (corresponding to approximately 2.4 seconds);

Adjusting the safe distance (cont.)

– distance gauge ***B***: intermediate distance 2 (corresponding to approximately 2 seconds);

– distance gauge ***C***: intermediate distance 1 (corresponding to approximately 1.6 seconds);

– distance gauge ***D***: short distance (corresponding to approximately 1.2 seconds).

The selected distance gauge appears in green on the instrument panel.

The other gauges remain in grey.

Note: the distance must be set according to the traffic level, local regulation and weather conditions.

The safe distance is adjusted by default on the distance gauge ***B***.

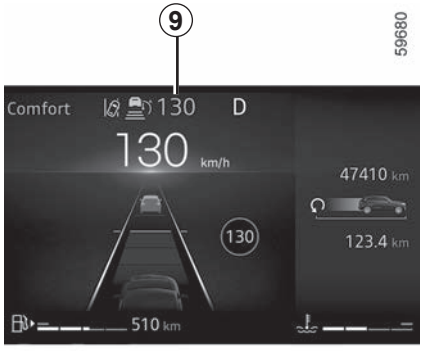

Exceeding the cruising speed

The cruising speed may be exceeded at any time by applying the accelerator pedal.

If it is exceeded, the cruising speed ***9*** appears in red.

The distance gauge flashes if the distance between your vehicle and the vehicle in front is less than the safe distance selected: the Safe Distance Control function is no longer active.

Then, release the accelerator pedal: the cruise control and safe distance control will automatically resume the speed and distance instructions that you had previously selected.

Overtaking manoeuvre

If you wish to overtake the vehicle in front, activating the indicator will temporarily cancel the safe distance control and enable an acceleration speed sufficient to complete overtaking.

Stop and start

On vehicles fitted with an automatic gearbox, if the vehicle in front slows down, the system adapts its speed to a complete stop if necessary (in the event of a traffic jam, etc.). The vehicle stops a few metres from the vehicle in front. The Stop and Start function can put the engine on standby ➥ 2.11. When the vehicle in front sets off again:

– if the stop does not exceed about three seconds, the vehicle sets off automatically without any action by the driver;
– if the stop exceeds about three seconds, you must apply the accelerator pedal or press button ***7*** (**RES/+**) in order for the vehicle to set off again. The message “Press RES or accelerate to restart Cruise Control” appears on the instrument panel to confirm.

If the stop exceeds about three minutes, the electronic parking brake is automatically applied and the Stop and Go adaptive cruise control is deactivated. The ***8*** warning light disappears when the function is no longer in operation.

Putting the function on standby

You can set the function to standby when:

– you press switch ***3*** (**0**);
– you apply the brake pedal while the vehicle is moving.

The function is deactivated by the system if:

– you set the automatic gearbox to **P** or **N**;
– you engage the reverse gear;
– you unbuckle the driver’s seatbelt;
– you open one of the opening elements;
– you press the engine start/stop button;
– the slope is too steep;
– the vehicle speed is above 112 mph (180 km/h);
– certain driving aids and correction devices are triggered (active emergency braking, ABS, ESC);

– when you press the clutch pedal for a prolonged period or upon prolonged neutral position on vehicles equipped with a manual gearbox.

In all circumstances, the standby is confirmed when the warning lights appear in grey and the message “Adaptive Cruise Control disconnected” appears on the instrument panel.

Putting the adaptive cruise control in standby or switching it off does not cause a rapid reduction in speed: you must brake by applying the brake pedal if necessary.

Exit from standby

Based on the stored cruising speed

If a speed is stored, it can be recalled, once you are sure that the road conditions are suitable (traffic, road surface, weather conditions, etc.).

Press switch ***7*** (**RES/+**) in the range of confirmed speeds.

When the stored speed is recalled, activation of the cruise control is confirmed by the illumination of the cruising speed in green.

Note: if the stored speed is higher than the current speed, the vehicle will accelerate to reach that speed.

Based on the current speed

When the cruise control is set to standby, pressing switch ***6*** (**SET/-**) reactivates the cruise control function without taking into account the stored speed: it is the speed at which the vehicle is moving that is taken into account.

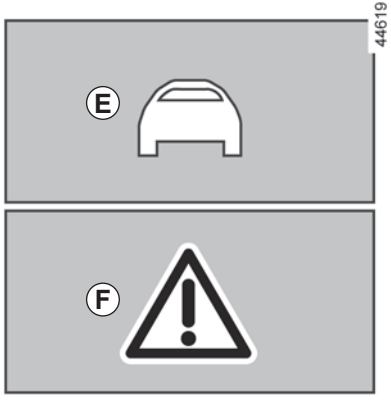

“Take control of the vehicle” warnings

In some situations (e.g. coming upon a much slower vehicle, vehicle in front changing lanes quickly etc.), **the system may not have time to react.**

Depending on the situation, the system sounds a beep associated with:

– the orange alert ***E*** if the situation requires the driver’s attention;

or

– the red alert ***F*** accompanied by the message “Brake”, if the situation requires the driver’s immediate attention.

In all situations, react accordingly and perform the appropriate manoeuvres.

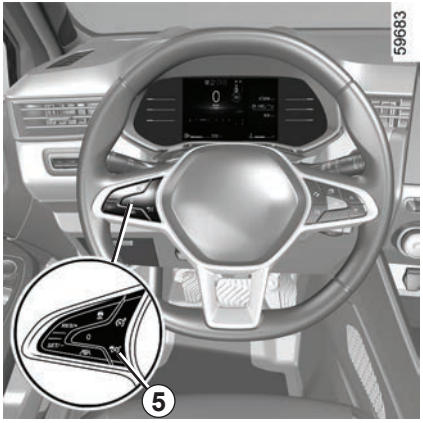

Switching off the function

The “Adaptive cruise control” function is deactivated when you press the switch ***5***.

The ***8*** warning light disappears from the instrument panel to confirm that the function has stopped.

Temporary unavailability

The radar is able to detect vehicles in front of your vehicle. The system cannot operate correctly if the radar detection area is obscured or if its signal is disrupted.

If the radar detection area is obstructed or the radar signal is disrupted, the message “Front radar no visibility” is displayed on the instrument panel and the “Adaptive cruise control” function is interrupted. The green ***8*** warning light disappears to confirm that the function has been stopped automatically.

Ensure that the radar area is not obstructed (dirt, mud, snow, a badly fitted/attached front number plate), impacted, modified (including paintwork) or hidden by any accessory fitted on the front of the vehicle (on the grille or logo etc.).

Conditions in certain geographical areas may hinder the function, for example:

– arid zones, tunnels, long bridges or lightly used roads without road lines, without signs or trees nearby;
– a military or airport zone.

You must leave such areas in order for the function to work.

In all cases, if the message is not erased after the engine is restarted, please contact an authorised dealer.

Operating faults

If an “Adaptive cruise control” function operating fault is detected, the message “Check Adaptive Cruise control” appears on the instrument panel and the “Adaptive cruise control” function is deactivated.

If an operating fault is detected on one or more components of the system, the “Adaptive cruise control” function is interrupted.

The warning light appears on the instrument panel along with, depending on the malfunction, one of the following messages:

– “Front camera to check”;
– “Front radar to check”;
– “Camera/Radar to check”;
– “Check vehicle”.

Consult an approved dealer.

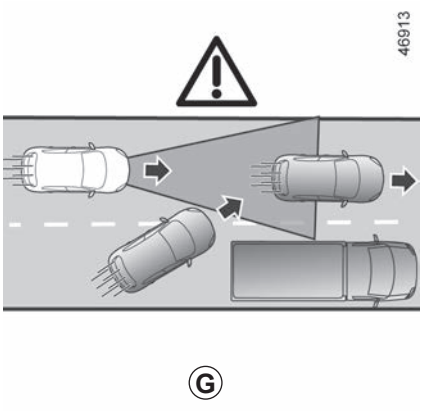

Limitations of system operation

Vehicle detection

The system detects only vehicles (cars, trucks, motorbikes) that are moving in the same direction as your vehicle.

A vehicle turning into the same lane (e.g. ***G***) will be taken into account by the system only once it enters the camera and radar detection areas.

The system may trigger abrupt or delayed braking.

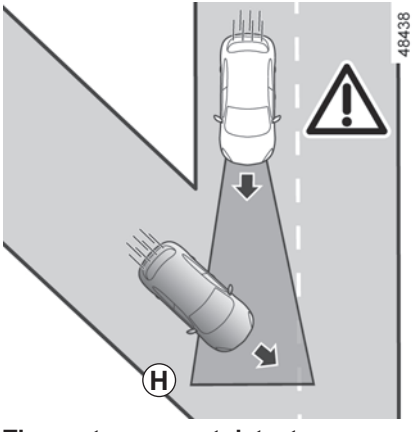

The system cannot detect:

– vehicles arriving at intersections: slip road (e.g. ***H***) etc;

– vehicles driving on the wrong side of the road or reversing towards you.

The adaptive cruise control must only be used on a motorway (or multi-lane road separated by a barrier).

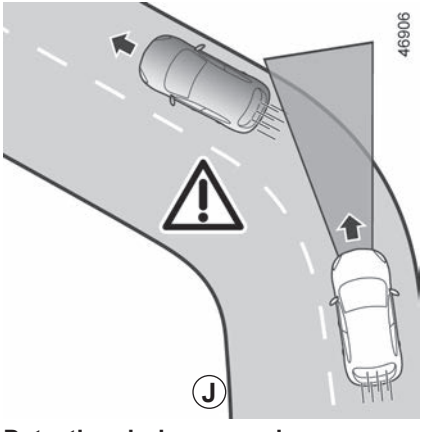

Detection during cornering

When entering a corner or bend, the radar and/or camera may temporarily not be able to detect the vehicle in front (e.g. ***J***).

The system may trigger an acceleration.

When exiting a bend, the system's detection of the vehicle in front may be disrupted or delayed.

The system may trigger abrupt or delayed braking.

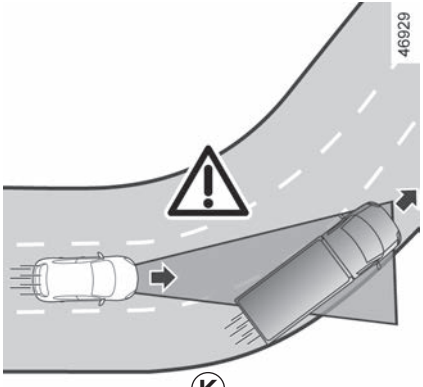

K

Detection of vehicles in adjacent lanes

The system may detect vehicles driving on an adjacent lane when:

– you drive into a bend (e.g. ***K***);

– you are driving on a road with narrow lanes;

– the speed of the vehicle on the adjacent lane is slower and if one of these vehicles is located too close to the lane of the other.

The system may incorrectly trigger vehicle slowing or braking.

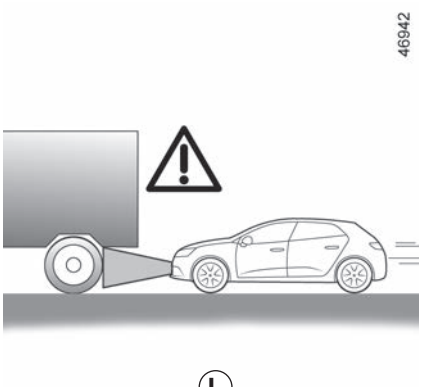

L

Vehicles hidden due to variations in ground relief

The system will not detect vehicles hidden due to variations in ground relief or those located outside of the camera and radar detection areas when driving uphill or downhill.

Vehicles outside the camera and radar detection areas.

The system will react late or not at all if the detected vehicles are outside the camera and radar detection areas, particularly in the following cases:

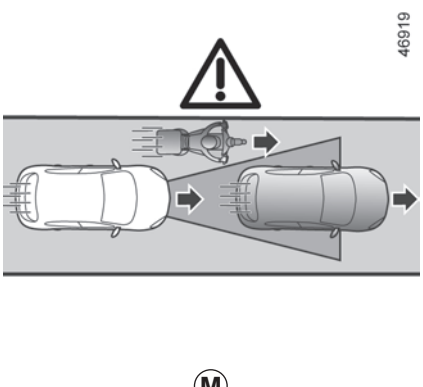

M

– vehicles transporting long objects which exceed the line;

– the actual length of tall vehicles (e.g. ***L***) outside the radar detection area (construction machine, agricultural equipment towing vehicle, etc.) ;

– vehicles insufficiently centred in the lane;

– narrow vehicles which are very close (e.g. ***M***).

46931

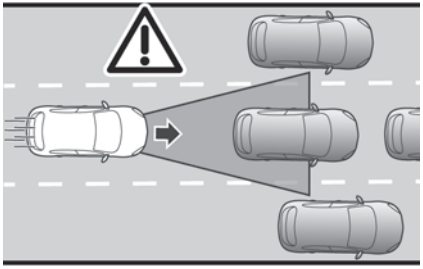

N

Stationary and slow moving vehicles

When your speed is over approximately 31 mph (50 km/h), **the system does not detect**:

– stationary vehicles (e.g ***N***);

– very slow moving vehicles.

When your speed is less than approximately 31 mph (50 km/h), **the system may not react or may react very late** to:

– stationary vehicles (e.g ***N***);

– very slow moving vehicles;

46932

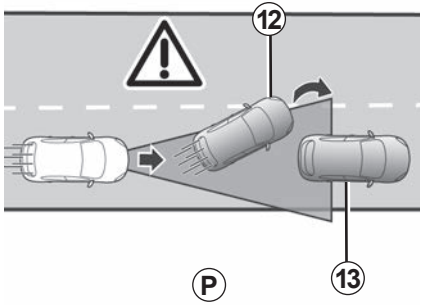

P

– vehicles in front ***12*** that change lane, discovering a stationary vehicle ***13*** (e.g. ***P***);

– when the vehicle is stationary ***14***, when you change lane (e.g. ***Q***).

57120

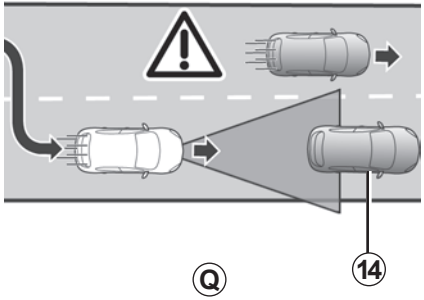

Q

Always be ready to take control of your vehicle when you come upon stationary or very slow moving vehicles (e.g. ***N***).

The adaptive cruise control does not trigger an emergency stop and its braking capability is limited.

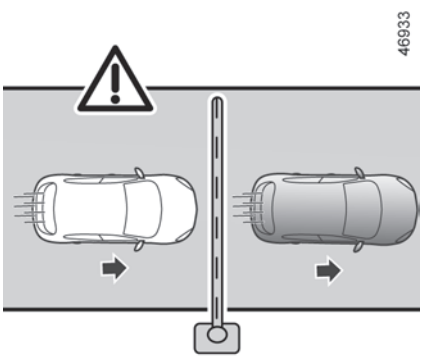

R

Non-detection of fixed obstacles and objects of a small size

The system cannot detect:

– pedestrians, bikes, scooters, etc. ;

– animals;

– fixed obstacles (toll barriers, walls, etc.) (e.g. ***R***).

These are not taken into account by the system.

They do not trigger any alert or reaction by the system.

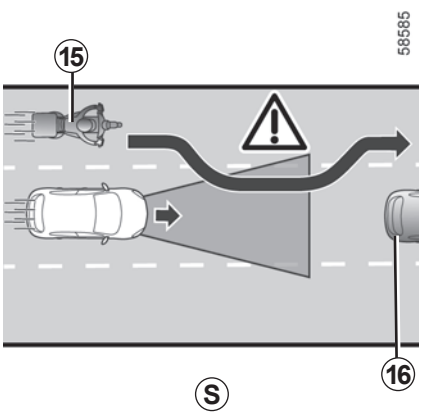

S

Detection of vehicles moving into lane at high speed

If your vehicle is overtaken by another vehicle driving at high speed ***15*** (motorcycle, car, etc.) and the vehicle is temporarily between you and the vehicle in front ***16***, **the system may trigger undue acceleration, slowing or braking.**

This function is an additional driving aid. It can under no circumstances replace the driver's responsibility to respect speed limits and safe distances and to be vigilant.
The driver must always be in control of the vehicle.
The driver must always adapt their speed to the surroundings and driving conditions, regardless of system indications.
Except for lines delimiting lanes, traffic indicators (traffic lights, signs, pedestrian crossings etc.) are not recognised by the system. These do not trigger any alert or reaction by the system.
The system should under no circumstances be taken to be an obstacle detector or an anti-collision system.
The adaptive cruise control must only be used on a motorway (or multi-lane road separated by a barrier).

System servicing/repairs
- In the event of an impact, the radar and/or camera alignment may be changed and its operation may consequently be affected. Deactivate the system and consult an authorised dealer.
- Any work in the proximity of the radar and/or camera (replacements, repairs, windscreen modifications, paintwork etc.) must be carried out by a qualified professional.

Only an authorised dealer is qualified to service the system.
Deactivating the function
You must disable the function if:
- the vehicle is travelling on a windy road;
- the vehicle is being towed (breakdowns);
- the vehicle is towing a trailer or a caravan;
- the vehicle is being driven in a tunnel or close to a metallic structure;
- the vehicle arrives at a toll point, a roadwork area or on a narrow lane;
- the vehicle is being driven up or down a very steep slope;
- the visibility is poor (glaring sun, fog etc.);
- the vehicle is being driven on a slippery road surface (rain, snow, gravel, etc.);
- the weather conditions are poor (rain, snow, side winds, etc.);
- the radar area has been damaged (impacts etc.) ;
- the camera area has been damaged (e.g. on the inside or outside of the windscreen);
- the windscreen is cracked or distorted.

In the event of the system behaving abnormally, deactivate it and consult an authorised dealer.

In the event of system disturbance

Some conditions can disturb or damage the operation of the system, such as:

– the windscreen or radar area is obscured (by dirt, ice, snow, condensation, number plate etc.);
– a complex environment (tunnel etc.);
– poor weather conditions (snow, heavy rain, hail, black ice, etc.);
– poor visibility (night, fog etc.);
– poor contrast between the vehicle preceding it and the surrounding area (e.g. white vehicle in a snowy area etc.) ;
– being dazzled (glaring sun, lights of vehicles travelling in the opposite direction etc.);
– narrow, winding or undulating road (tight bends etc.) ;
– a slower vehicle with a significant difference in speed;
– use of mats not adapted to the vehicle. On the driver's side, only use mats suitable for the vehicle, attached with the pre-fitted components, and check the fitting regularly. Do not lay one mat on top of another. **There is a risk of wedging the pedals.**

In these cases, the system may wrongly intervene.

Risk of unwanted braking or acceleration.

Many unforeseen situations may affect the system operation. Certain objects or vehicles that can appear in the camera or radar detection zone may be interpreted by the system incorrectly, possibly leading to inappropriate acceleration or braking.

You should always be attentive to sudden events that might occur while you are driving. Always keep your vehicle under control by keeping your feet near the pedals, so that you are ready to act in any event.

The Motorway and Traffic Assistant is a driving aid system designed for use on long motorway journeys, where traffic is flowing or in jams.

Depending on the vehicle, this system comprises the "**Stop and Go adaptive cruise control function**" ➥ 2.103 and the "**Lane centring**" function.

When these two functions are activated simultaneously, the system allows the driver to:

– maintain vehicle speed based on a previously saved speed;

– adjust the distance between this vehicle and the vehicle in front;

– direct the vehicle to the centre of the lane.

Important: you should keep your feet near the pedals and your hands on the steering wheel at all times to prepare for any event.

The "Stop and Go adaptive cruise control" function

Based on information from a radar or camera, the Stop and Go adaptive cruise control function gives you the option of maintaining a selected speed, known as the cruising speed, while keeping a safe distance from the vehicle in front in the same lane.

If the vehicle in front stops, the Stop and Go adaptive cruise control may brake your vehicle to a complete stop before setting off again.

The system controls acceleration and deceleration of your vehicle using the engine and braking system.

The "Stop and Go adaptive cruise control" function can be activated from 0 to 105 mph (0 to 170 km/h) according to conditions on the road (traffic, weather, etc.).

It is represented by the following symbol ➥ 2.103.

Note:

– the driver must observe the maximum speed limit and safe distances in the country where they are driving;

– the Stop and Go adaptive cruise control can brake the vehicle up to a third of the braking capacity. Depending on the situation, the driver may need to brake harder.

The Stop and Go adaptive cruise control does not trigger an emergency stop and its braking capability is limited.

The “Lane centring” function

Using information from a camera, the “Lane Centring” function manipulates the steering system to direct the vehicle to the middle of the lane.

This function is only available while the Stop and Go adaptive cruise control is activated ➥ 2.103.

If the conditions allow it, the function is available between:

– 0 mph and 99 mph (0 and 160 km/h) approximately with a vehicle in front;

or

– 37 mph (60 km/h) et 99 mph (160 km/h) approximately without a vehicle in front.

The “Lane Centring” function is a comfort feature.

It is represented by the symbol .

Note: in the event of a sharp bend, the function’s lateral retention capacities are limited and require the driver to take immediate action on the steering wheel.

Additional information

Depending on the vehicle, the “Motorway and Traffic Assistant” function may be used with other driving aid functions.

Please note that:

– activating the speed limiter causes deactivation of the system;

– the system cannot be activated when the “Park Assist” function is active;

– activation of the “Lane Centring” function leads to suspension of the “Lane Departure Warning” or “Lane Keep Assist” functions if these have been activated. They will be reactivated when the driver decides to stop the “Lane Centring” function.

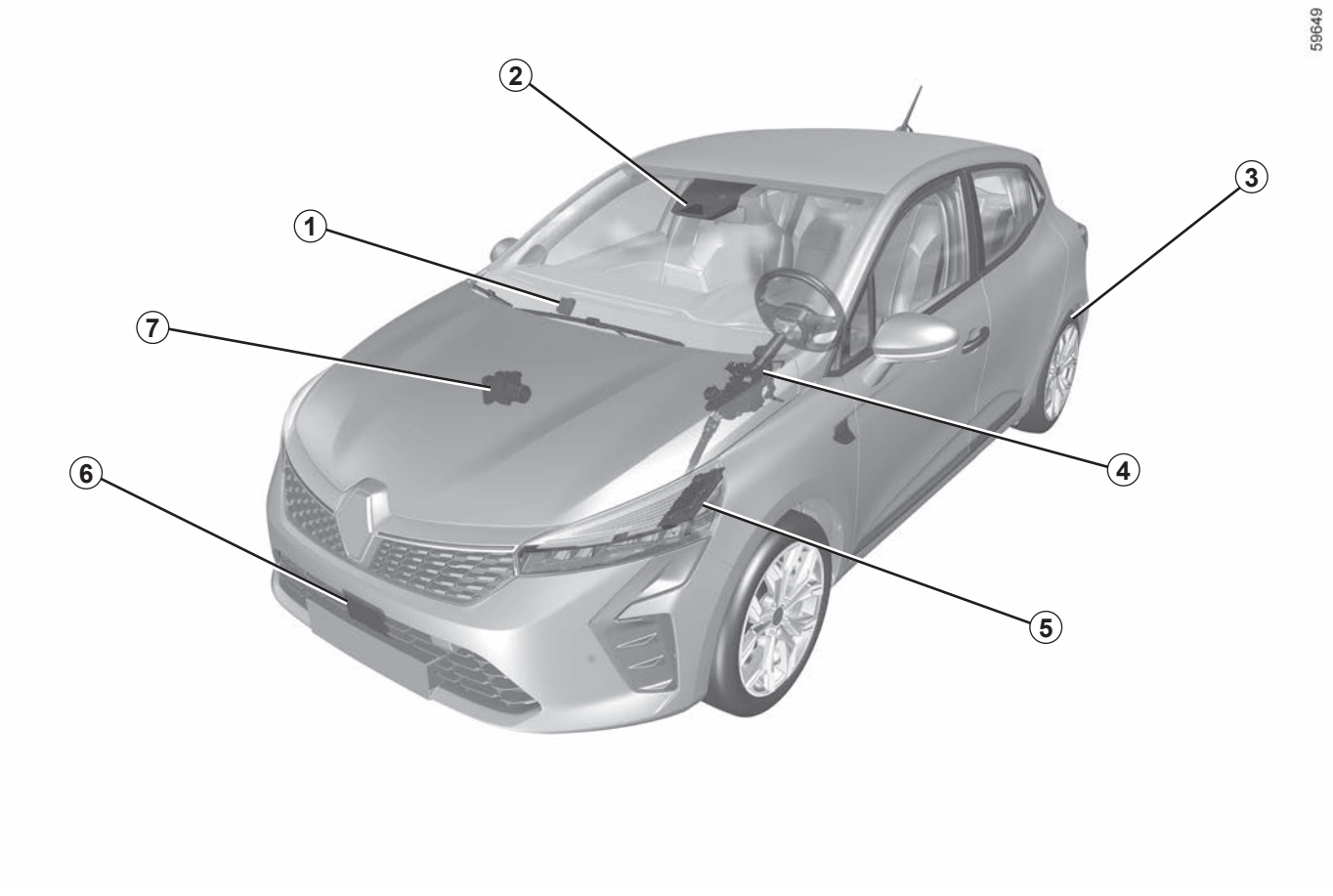
59649
1
2
3
4
5
6
7

Computer *1*

Receives information from the radar and camera to determine the vehicle trajectory and speed (acceleration or braking).

Amongst other things, it controls activation/deactivation of the system (door opening, etc.).

Camera *2*

Detects markings on the ground and the position of vehicles on the various traffic lanes.

It complements the information transmitted by the ***6*** radar.

Make sure the windscreen is not obscured (by dirt, mud, snow, etc.).

Electronic parking brake *3*

Keeps the vehicle stationary under certain conditions.

Power-assisted steering *4*

Operates the front wheels to assist the trajectory of your vehicle according to details transmitted by the ***1*** computer.

It also enables detection of the driver's hands on the steering wheel.

Engine computer *5*

It controls and directs the engine to carry out the required acceleration.

Radar *6*

Calculates the distance between your vehicle and the vehicle in front.

The system's maximum range is approximately 150 metres.

This may vary according to the road conditions (ground relief, weather conditions, etc.)

Radar *6* (continued)

Ensure that the radar area is not obstructed (dirt, mud, snow, a badly fitted front number plate), impacted, modified (including painting) or hidden by any accessory fitted on the front of the vehicle (on the grille or logo etc.).

Active vehicle control *7*

This system provides information on vehicle dynamics to the computer ***1*** (speed, lateral acceleration etc.) and acts on the braking system to control deceleration and to keep the vehicle stationary.

The radar and camera zones must be kept clean and free of any tampering in order to ensure the proper operation of the system.

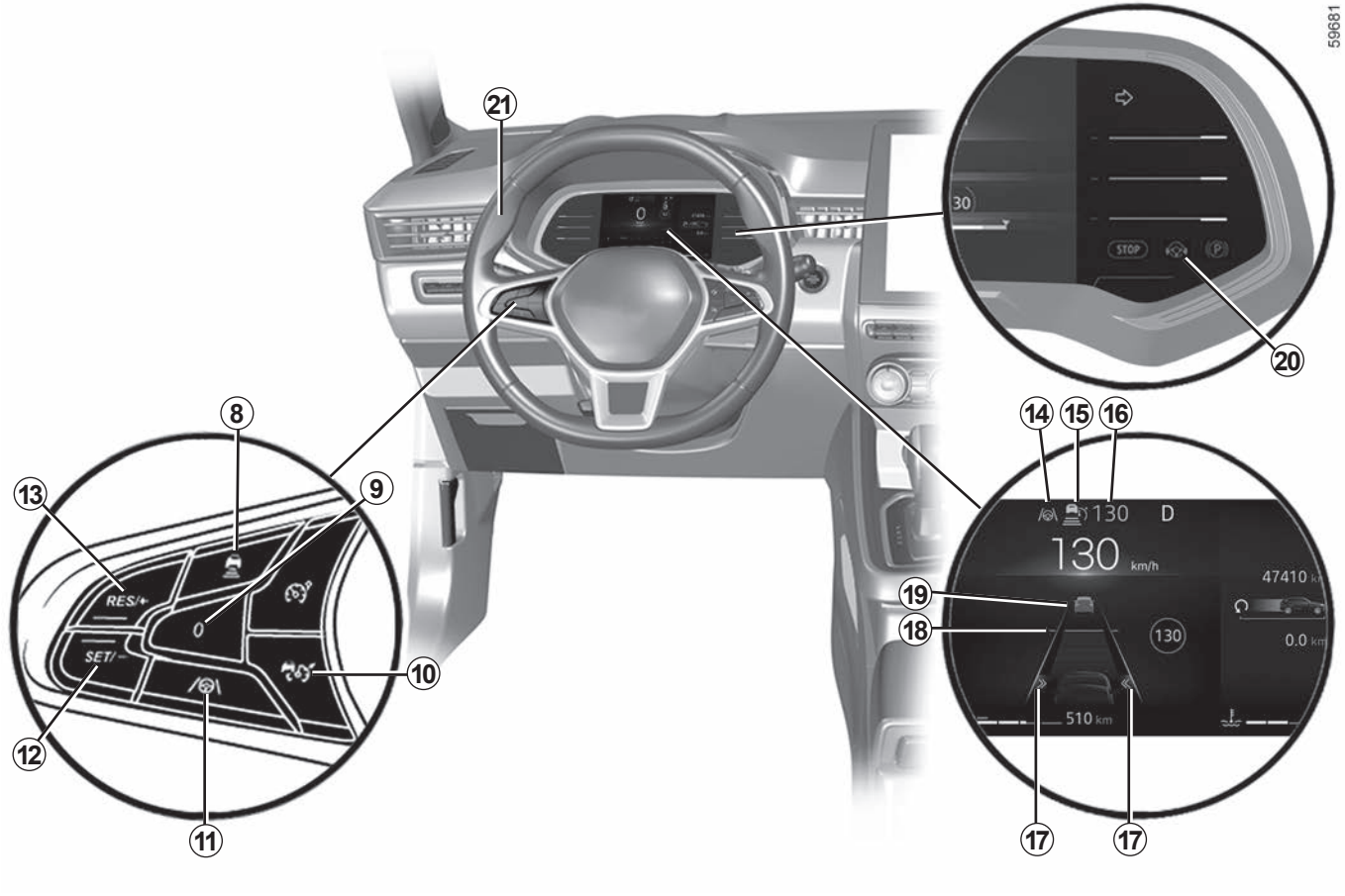
59681
21
30
STOP
P
20
8
9
13
RES/+
0
SET/-
10
12
11
14
15
16
130
D
130
km/h
47410
19
18
130
0.0
510 km
17
17

Controls

8 Safe distance settings

9 Set active functions to standby (with cruising speed saved) (0).

10 Adaptive cruise control main stop/start switch .

11 “Lane Centring” function activation/deactivation switch .

12 Cruising speed activation, storage and decrease switch (**SET/-**).

13 Switch to activate and increase cruising speed or to recall the memorised cruising speed (**RES/+**).

Displays on the instrument panel

14 “Lane Centring” function warning light .

15 “Stop and Go adaptive cruise control” function warning light .

16 Stored cruising speed.

17 Left-hand and right-hand line indicators.

18 Stored safe distance.

19 Vehicle in front.

20 Hands off steering wheel detection warning light .

Steering wheel *21*

The driver must always keep their hands on the steering wheel.

If too much force is applied when turning the steering wheel, the “Lane Centring” function is put on standby so the driver can regain control of the vehicle.

Under certain conditions (sharp bends, etc.) a vibration may be triggered on the steering wheel to warn the driver that they must regain control of the vehicle.

If the driver does not handle the steering wheel (no hands are detected) the “Lane centring” function is deactivated after several alerts.

Activating the “Lane Centring” function

Once the Stop and Go adaptive cruise control is activated ➥ 2.103, press button ***11*** to activate the “Lane Centring” function.

The “Lane centering activated” message appears on the instrument panel accompanied by the ***14*** warning light and the symbol to confirm that the function is activated.

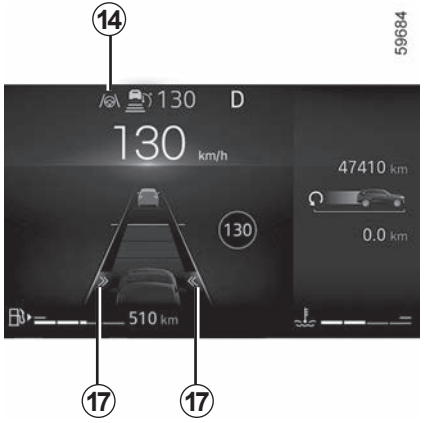

Note: you must keep your hands on the driving wheel when using the “Lane Centring” function. The symbol is displayed to confirm that the function is activated.

The warning light ***14*** is displayed in green and the left-hand and right-hand line indicators ***17*** are displayed on the instrument panel to confirm that the function is activated and directing your vehicle to the centre of the lane.

Note: if you press button ***11*** when the Stop and Go adaptive cruise control is not activated, the message: “First activate Adapt. cruise ct” appears on the instrument panel.

“Lane Centring” function on standby

The “Lane Centring” function is put on standby automatically when:

– the Stop and Go adaptive cruise control is put on standby ➥ 2.103;

– the system no longer detects the lines or only one line is detected in your lane;

– the lane is too narrow or too wide;

– the system does not detect any hands on the steering wheel;

– the bend is too sharp;

– the vehicle speed is over approximately 99 mph (160 km/h);

– the vehicle speed is below approximately 37 mph (60 km/h), without any vehicle in front;

– the vehicle touches or breaches a line;

– the system is temporarily disrupted (for example: camera obscured by dirt, mud, snow,condensation, etc.).

Certain actions carried out by the driver also suspend the “Lane Centring” function:

– activating the indicators;

– too much force is used when handling the steering wheel.

Standby of the function is confirmed by the ***14*** warning light and the left-hand and right-hand line indicators ***17*** appearing in grey on the instrument panel.

Important: you should keep your feet near the pedals and your hands on the steering wheel at all times to prepare for any event.

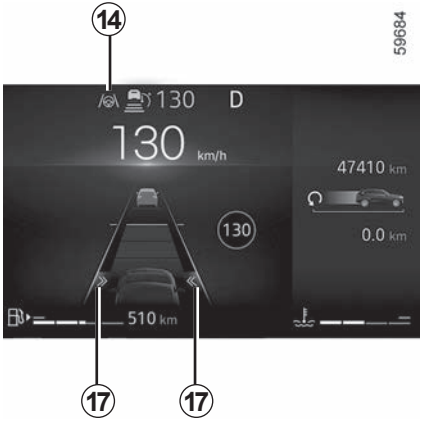

Once the conditions are met, the function again directs the vehicle to the centre of the lane.

The ***14*** warning light and left-hand and right-hand line indicators ***17*** are displayed in green on the instrument panel.

You can affect **the vehicle trajectory** at any point by turning the steering wheel.

“Hands on steering wheel” alert

When the “Lane Centring” function no longer detects your hands on the steering wheel, several warning levels will be triggered:

– **after 15 seconds**, the message: “Keep hands on steering wheel” is shown in yellow on the instrument panel ***22***;

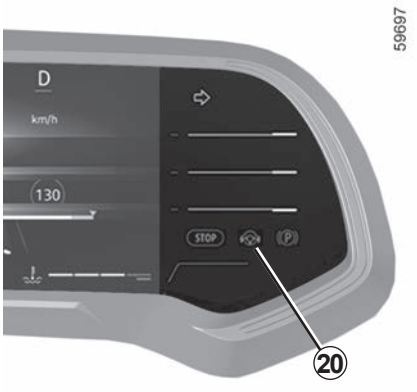

– **after approximately 30 seconds**, the message: “Keep hands on steering wheel” appears on the instrument panel ***22*** and the warning light ***20*** appears in red, accompanied by an audible signal of gradually increasing volume;

– **after approximately 45 seconds,** the audio sources go on standby, the audible signal sounds continually, the warning light ***20*** is switched off and the message “Lane centering deactivated” appears in red on the instrument panel ***22***: **the “Lane Centring” function is deactivated.**

Note: in some situations, the “Lane Centring” function may no longer detect your hands on the steering wheel and may sound a signal:

– the vehicle is moving along a long straight lane and the driver’s hands are immobile on the steering wheel;

– the driver is holding the steering wheel very lightly;

– ...

If the “Lane Centring” function is deactivated due to the driver’s hands not being detected on the steering wheel, the Stop and Go adaptive cruise control function continues to function.

In the first two alert levels, when the system again detects the presence of the driver’s hands on the steering wheel, the system stops the alerts.

The function continues to direct the vehicle to the centre of the lane.

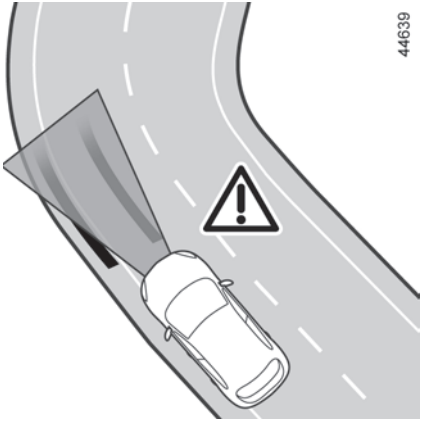

In the case of a sharp bend

In the case of a sharp band, and depending on the vehicle speed, the function's side retaining capacities will be limited and require the driver to carry out immediate action on the steering wheel so that the function can continue to maintain the vehicle in the centre of the lane.

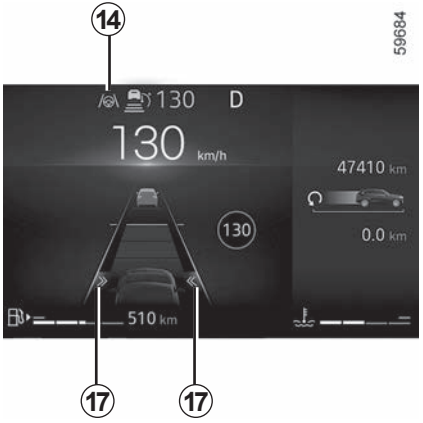

If the driver does not intervene, the function triggers the vibration of the steering wheel to signal that the vehicle is about to breach a line and that the driver needs to carry out immediate action.

The ***14*** warning light and the left-hand or right-hand line indicator ***17*** appear in red on the instrument panel.

If the vehicle crosses a line completely and moves out of lane, the "Lane Centring" function is put on standby.

Standby of the function is confirmed by the ***14*** warning light and the left-hand and right-hand line indicators ***17*** appearing in grey on the instrument panel.

Deactivating the “Lane Centring” function

The “Lane Centring” function is deactivated when:

– you press the ***11*** switch. The function’s deactivation is confirmed by the appearance of the “Lane centering deactivated” message on the instrument panel;

  Note: pressing the ***11*** switch once deactivates the “Lane centring” function but does not affect operation of the Stop and Go adaptive cruise control function.

– the Stop and Go adaptive cruise control is deactivated ➥ 2.103;

  Note: pressing the ***10*** button once will deactivate both the “Stop and Go adaptive cruise control” function and the “Lane Centring” function.

– the system will no longer detect the driver’s hands on the steering wheel for a period over 45 seconds approximately.

The ***14*** warning light and the left-hand and right-hand line indicators ***17*** disappear from the instrument panel.

Temporary unavailability

The radar is able to detect vehicles in front of your vehicle.

The system cannot operate correctly if the radar detection area is obscured or if its signal is disrupted.

If the radar detection area is obstructed or the radar signal is disrupted, the message “Front radar no visibility” is displayed on the instrument panel and the “Stop and Go adaptive cruise control” function is interrupted.

The green warning light disappears to confirm that the function has been automatically deactivated.

Ensure that the radar area is not obstructed (dirt, mud, snow, a badly fitted front number plate), impacted, modified (including painting) or hidden by any accessory fitted on the front of the vehicle (on the grille or logo etc.).

Conditions in certain geographical areas may hinder the function, for example:

– arid zones, tunnels, long bridges or lightly used roads without road lines, without signs or trees nearby;

– a military or airport zone.

You must leave such areas in order for the function to work.

In all cases, if the message is not erased after the engine is restarted, please contact an authorised dealer.

Operating faults

If a Lane Centring function operating fault is detected, the message “Check lane centering” is displayed on the instrument panel and the function is disabled.

The Stop and Go adaptive cruise control function remains in operation.

Consult an approved dealer.

If a “Stop and Go adaptive cruise control” function operating fault is detected, the “Check Adaptive Cruise control” message appears on the instrument panel and both the “Stop and Go adaptive cruise control” function and the “Lane Centring” function are interrupted.

Consult an approved dealer.

If an operating fault is detected on one or more components of the “Motorway and Traffic Assistant” system, the warning light appears on the instrument panel, alongside, depending on the nature of the fault, the message:

– “Front camera to check”;

– “Front radar to check”;

– “Camera/Radar to check”;

– “Check vehicle”.

The two “Stop and Go adaptive cruise control” and “Lane Centring” functions are interrupted.

Consult an approved dealer.

The “Motorway and Traffic Assistant” function is an additional driving aid.

It can under no circumstances replace the driver’s responsibility to respect speed limits and safe distances and to be vigilant.

The driver must always be in control of the vehicle.

The driver must always adapt their trajectory and speed according to the surroundings and traffic conditions.

The “Motorway and Traffic Assistant” uses the “Stop and Go adaptive cruise control” function and the “Lane Centring” function. It must only be used on a motorway or multi-lane road (separated by a barrier).

It must not be used in heavy traffic, on winding or slippery roads (black ice, aquaplaning, gravel) or during bad weather (fog, rain, side winds etc.).

There is a risk of accidents.

The “Motorway and Traffic Assistant” function is an additional driving aid.

it can under no circumstances replace the driver’s responsibility to respect speed limits and safe distances and to be vigilant.

The driver must always be in control of the vehicle.

The driver must always adapt their trajectory and speed according to the surroundings and driving conditions, regardless of system indications.

Except for lines delimiting lanes, traffic indicators (traffic lights, signs, pedestrian crossings, etc.) are not recognised by the system. These do not trigger any alert or reaction by the system.

The “Motorway and Traffic Assistant “ uses the Stop and Go adaptive cruise control function and the Lane Centring function.

The system should under no circumstances be taken to be an obstacle detector or an anti-collision system.

The Motorway and Traffic Assistant function must only be used on a motorway or multi-lane road separated by a barrier.

System servicing/repairs

– In the event of an impact, the radar and/or camera alignment may be changed and its operation may consequently be affected. Deactivate the system and consult an authorised dealer.

– Any work in the proximity of the radar and/or camera (replacements, repairs, windscreen modifications, paintwork etc.) must be carried out by a qualified professional.

Only an authorised dealer is qualified to service the system.

Deactivating the system

You must deactivate the system if:

– the vehicle is travelling on a windy road;
– the vehicle is being towed (breakdowns);
– the vehicle is being driven with an emergency spare wheel;
– the vehicle is towing a trailer or a caravan;
– the vehicle is being driven in a tunnel or close to a metallic structure;
– the vehicle arrives at a toll point, a roadwork area or on a narrow lane;
– the vehicle is being driven up or down a very steep slope;
– the visibility is poor (glaring sun, fog etc.);
– the weather conditions are poor (rain, snow, side winds, etc.);
– the vehicle is being driven on a slippery road surface (rain, snow, gravel, etc.);
– the area of the camera has been damaged (e.g. on the inside or outside of the windscreen);
– the windscreen is cracked or distorted;
– the radar area has been damaged (impacts, etc.) ;

In the event of the system behaving abnormally, deactivate it and consult an authorised dealer.

Some conditions can disrupt or damage the operation of the system, for example:

– obstruction of the windscreen or the radar area (by dirt, ice, snow, condensation etc.) Frequently check the cleanliness and condition of the windscreen, front wiper blades and front bumper;
– a complex environment (tunnel etc.);
– poor weather conditions (snow, heavy rain, hail, black ice, etc.);
– poor visibility (night, fog etc.);
– poor contrast between the vehicle preceding it and the surrounding area (e.g. white vehicle in a snowy area etc.) ;
– being dazzled (glaring sun, lights of vehicles travelling in the opposite direction etc.);
– narrow, winding or undulating road (tight bends etc.);
– the tar lines detected as a line by the system;
– narrowing/widening lanes;
– road markings which are worn, lacking in contrast or very widely spaced from one another (lines partially erased etc);
– multiple markings on the road (roadworks area, slip roads connecting to adjacent motorways, hard shoulder etc.);
– a slower vehicle with a significant difference in speed;
– use of mats not adapted to the vehicle. On the driver's side, only use mats suitable for the vehicle, attached with the pre-fitted components, and check the fitting regularly. Do not lay one mat on top of another. **There is a risk of wedging the pedals.**

In these cases, the system may wrongly intervene.

– Risk of unwanted braking or acceleration.
– Risk of unwanted, incorrect correction or no correction of trajectory.

Many unforeseen situations may affect the system operation. Certain objects or vehicles that can appear in the camera or radar detection zone may be interpreted by the system incorrectly, possibly leading to inappropriate acceleration or braking.

You should always be attentive to sudden events that might occur while you are driving. Always maintain your vehicle under control by keeping your feet near the pedals and your hands on the steering wheel, so that you are ready to act in any event.

Operating principle

Ultrasonic sensors, indicated by arrows ***1***, are fitted in the bumpers to measure the distance between the vehicle and an obstacle.

Depending on the vehicle, the system detects obstacles to the front, the rear and the sides of the vehicle.

The parking distance control system is only activated when the vehicle is driven at a speed below approximately 6 mph (10 km/h).

The function does not take into account towing or carrying systems that are not recognised by the system.

This measurement is indicated by beeps which become more frequent the closer you come to the obstacle, until they become a continuous beep when the vehicle is approximately 20 to 30 centimetres from the obstacle.

Location of the ultrasonic sensors *1*

Ensure that the ultrasonic sensors indicated by the arrows ***1*** are not obscured (by dirt, mud, snow, a badly fitted/attached number plate), impacted, modified (including paintwork) or obstructed by any accessory fitted to the rear and/or, depending on the vehicle, to the front or sides of your vehicle.

This function is an additional driving aid.

Under no circumstances should it replace the driver's care or responsibility whilst reversing.

The driver should always be ready for sudden incidents while driving: always ensure that there are no small, narrow moving obstacles (such as a child, animal, pushchair, bicycle, stone, post, etc.) in the blind spot when manoeuvring.

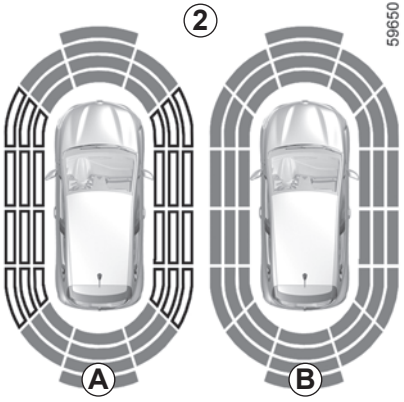

Note: the display ***2*** shows the vehicle surroundings and emits beeps.

It is necessary to travel a few metres before the side detection is activated.

If all areas have a grey background, the whole area around the vehicle is being monitored:

– ***A***: analysis of the vehicle surroundings in progress;

– ***B***: analysis of the vehicle surroundings carried out.

Note: for vehicles fitted with the “360° camera” function ➥ 2.73, analysis of the vehicle surroundings (areas ***A*** and ***B***) is not displayed in “Bird’s eye view” or “Side view” mode.

Operation

Most objects located less near the front, rear and sides of the vehicle are detected.

Depending on the distance of the obstacle, the frequency of the beep will be higher while approaching it, and will become a continuous beep around 20 cm away for obstacles to the sides, and around 30 cm for obstacles to the front or rear.

The green, orange (or yellow depending on the vehicle) and red zones will be shown on the ***C*** display.

Note: in the event of a change in trajectory during a manoeuvre, the risk of collision with an obstacle may be signalled late.

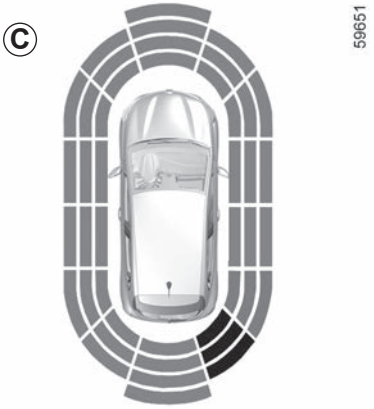

An impact to the underside of the vehicle while manoeuvring (e.g. striking a post, raised kerb or other street furniture) may result in damage to the vehicle (e.g. deformation of an axle).

To avoid any risk of accident, have your vehicle checked by an approved dealer.

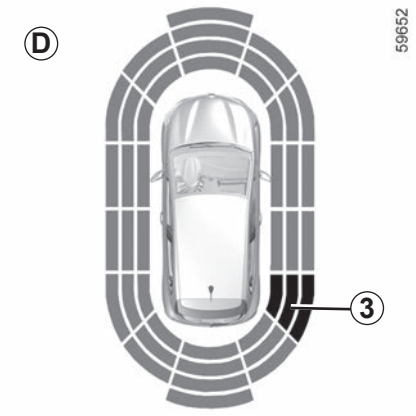

Detection of obstacles to the side

Depending on the direction of the wheels, the system determines the trajectory of the vehicle and notifies the driver of any risk or otherwise of a collision with an obstacle ***3*** to the side of the vehicle.

If a side obstacle is detected:

– the beeps become faster and then sound continuously as the obstacle gets nearer. Green, orange and red zones will be displayed on the display ***D***;

– if there is no risk of collision, no beep will sound when approaching the obstacle. Green, orange and red zones will be displayed interspersed on the display ***D***.

Note: in the event of a change in trajectory during a manoeuvre, the risk of collision with an obstacle may be signalled late.

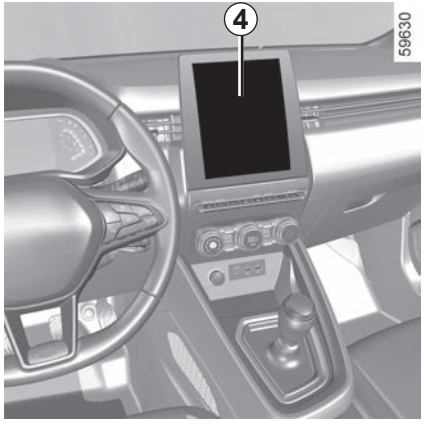

Activation/deactivation

Vehicles fitted with a multimedia screen *4*

To activate or deactivate the various zones covered by the ultrasonic detectors from the multimedia screen, refer to the multimedia instructions.

Select “ON” or “OFF”.

An impact to the underside of the vehicle while manoeuvring (e.g. striking a post, raised kerb or other street furniture) may result in damage to the vehicle (e.g. deformation of an axle).

To avoid any risk of accident, have your vehicle checked by an approved Dealer.

Vehicles not fitted with a multimedia screen

– With the vehicle stopped, press the ***7*** switch as many times as required to reach the “Settings” tab;
– press the ***8*** or ***9*** switch repeatedly to reach the “Vehicle setting” menu. Press the switch ***11*** OK;
– press the ***8*** or ***9*** switch repeatedly to reach the “PARKING ASSIST” menu. Press the switch ***11*** OK;
– press the ***8*** or ***9*** switch repeatedly to reach the various zones covered by the “Front”, “Rear” or “Lateral” ultrasonic detectors. Press the ***11*** OK switch to activate/deactivate the zones as required;

Depending on the equipment, with the vehicle stationary, press the ***6*** button to deactivate Park Assist. The switch indicator light ***5*** illuminates. Press again on the ***6*** switch to activate the function. The switch ***5*** warning light goes out.

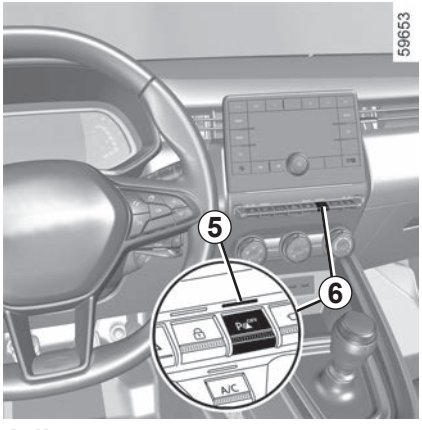

Adjustment

Vehicles fitted with a multimedia screen *4*

Depending on the vehicle, with the engine running, some settings can be adjusted from the multimedia screen ***4***.

Please refer to the multimedia instructions for further information.

Parking distance control audio volume

Adjust the volume of the parking distance control by pressing **+** or **-**.

System sound

Enables the system sound to be chosen.

Deactivating the system sound

Activate or deactivate the parking distance control sound.

Note: if you deactivate the sound, you will no longer be notified with beeps when approaching an obstacle.

When the vehicle is travelling at a speed below approximately 6 mph (10 km/h), some noises (motorcycle, lorry, pneumatic drill etc.) may trigger the beeping sound of the parking distance control.

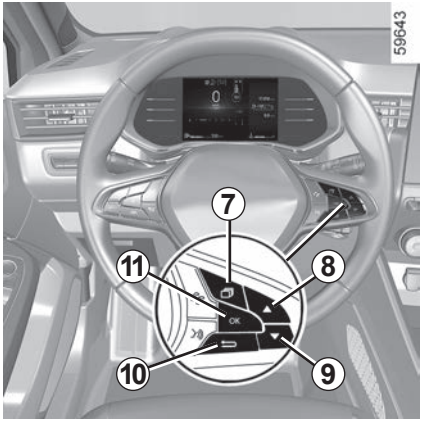

Vehicles not fitted with a multimedia screen

– With the vehicle stopped, press the ***7*** switch as many times as required to reach the “Settings” tab;

– press the ***8*** or ***9*** control repeatedly to reach the “Vehicle setting” menu. Press the switch ***11*** OK;

– press the ***8*** or ***9*** control repeatedly to reach the “PARKING ASSIST” menu. Press the switch ***11*** OK;

– press the ***8*** or ***9*** control repeatedly to reach the various levels of the “BIP VOLUME” setting. Press the ***11*** OK switch to confirm the desired level;

– press the ***10*** switch to return to the previous menu.

Deactivating the parking distance control manually

You must disable the function if:

– if towing, carrying or trailer equipment that is unrecognised by the system is present in front of the ultrasonic sensors;

– in the event of damage to the ultrasonic sensors.

Parking distance control automatic deactivation

The system deactivates:

– when the vehicle speed is above approximately 6 mph (10 km/h);

– depending on the model, when the vehicle is stationary for more than approximately 5 seconds and an obstacle is detected (such as when in a traffic jam, etc.);

– when the vehicle is in neutral on manual gearboxes, or in position **N** or **P** on automatic gearboxes;

– when an operating fault is detected.

Note: if the vehicle is fitted with a towbar recognised by the system, only the rear Park Assist function is deactivated.

Operating faults

When the system detects an operating fault, a beep sounds for approximately three seconds each time reverse gear is selected and the message “Check parking distance control” appears on the instrument panel.

Consult an approved dealer.

An impact to the underside of the vehicle while manoeuvring (e.g. striking a post, raised kerb or other street furniture) may result in damage to the vehicle (e.g. deformation of an axle).

To avoid any risk of accident, have your vehicle checked by an approved dealer.

System servicing/repairs

– In the event of an impact, the alignment of the sensors may be altered and their operation may consequently be affected. Deactivate the function and consult an authorised dealer.

– Any work in the area where the sensors are located (repairs, replacements, etc.) must be carried out by a qualified professional.

Only an authorised dealer is qualified to service the system.

System disturbance

Some conditions can disrupt or damage the operation of the system, for example:

– poor weather conditions (rain, snow, hail, black ice, etc.);

– in the event of exposure to strong electromagnetic waves (under high-voltage lines, etc.);

– some types of noise (motorcycle, lorry, pneumatic drill etc.);

– fitting an unsuitable towing ball or hook.

Risk of false alarms or absence of warnings

In the event of the system behaving abnormally, deactivate it and consult an authorised dealer.

Limitation of the system operation

– The area around the sensors must be kept clean and free of any modifications in order to ensure the proper operation of the system.
– Small objects moving close to the vehicle (motorcycles, bicycles, pedestrians, etc.) may not be recognised by the system.
– The system may not detect objects that are too close to the vehicle.
– The system may not provide a warning when the other vehicles or objects are travelling at a significantly different speed.
– During a change in trajectory, during a manoeuvre, the system may report obstacles with a delay.
– When the vehicle is towing a trailer, the rear Park Assist system must be deactivated

Deactivating the function

You must disable the function if:

– the area around the sensors has been damaged (rear bumper);
– the vehicle is equipped with a towing device that is not recognised by the system (ball, hook, adapter, etc.).

Operation

When the vehicle is reversing, the camera ***1*** on the luggage compartment lid transmits a view of the area surrounding the rear of the vehicle to the multimedia display ***2*** accompanied by two guiding lines ***3*** and ***4*** (fixed and mobile).

This system uses several guidelines for its operation (mobile for trajectory and fixed for distance).

When the red zone is reached, use the bumper image to stop accurately.

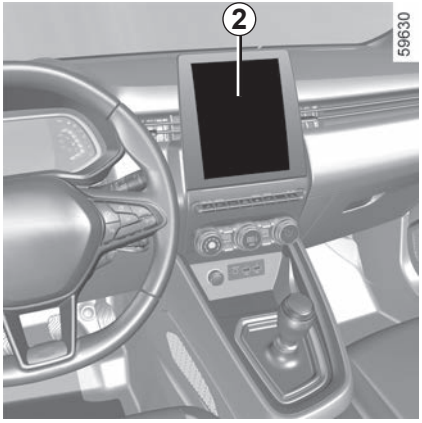

Fixed clearance gauge *3*

The fixed clearance gauge comprises coloured markers ***A***, ***B*** and ***C*** indicating the distance behind the vehicle:

– ***A***(red) approximately 30 centimetres from the vehicle;

– ***B*** (yellow) approximately 70 centimetres from the vehicle;

– ***C*** (green) approximately 150 centimetres from the vehicle.

This gauge remains fixed and indicates the vehicle trajectory if the wheels are in line with the vehicle.

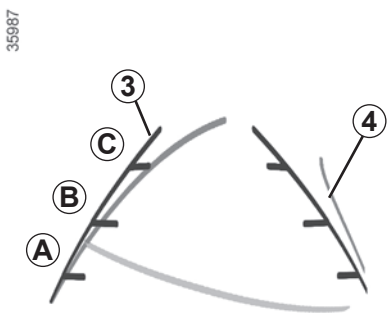

***4* moving guide line:**

This is shown in blue on the multimedia screen ***2***.

It indicates the vehicle trajectory according to the position of the steering wheel.

Special feature

Make sure that the camera is not obscured (by dirt, mud, snow, condensation etc.).

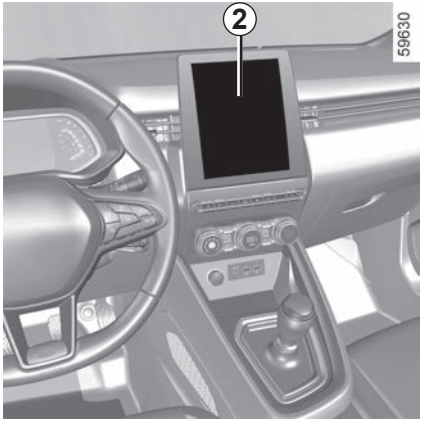

Activating, deactivating the reversing camera

To activate or deactivate the function from the multimedia screen **2**, refer to the multimedia instructions.

Activate or deactivate the reversing camera and confirm your choice.

You can also adjust the camera image settings (brightness, contrast, etc.).

Operating faults

When reverse gear is engaged, if the system detects an operating fault, a black screen is displayed temporarily on the multimedia screen **2**.

This may be caused by a fault affecting the camera or screen (clearness, fixed image, delayed communication etc.).

If the temporary display of the black screen persists, please consult an approved dealer.

The screen shows a reverse mirror image.

The frames are a representation projected on a flat surface. This information is to not be taken into account when superimposed on a vertical object or an object on the ground.

Objects which appear on the edge of the screen may be deformed.

In very bright light (snow, vehicle in sunshine, etc.), the camera vision may be adversely affected.

If the boot is open or poorly closed, the message “WARNING: Boot Open” appears and the camera display disappears.

This function is an additional aid.

It cannot, therefore, under any circumstances replace the vigilance or the responsibility of the driver.

The driver should always be ready for sudden incidents while driving: always ensure that there are no small, narrow moving obstacles (such as a child, animal, pushchair, bicycle, stone, post, etc.) in the blind spot when manoeuvring.

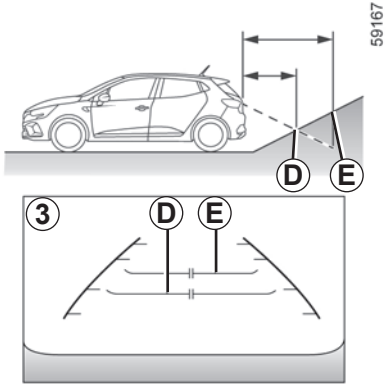

Difference between the estimated distance and actual distance

Reversing towards a steep uphill slope

The fixed guidelines ***3*** show the distances as closer than they actually are.

The objects shown on the screen are actually further away on the slope.

For example, if the screen displays an object at ***D***, the actual distance of the object is at ***E***.

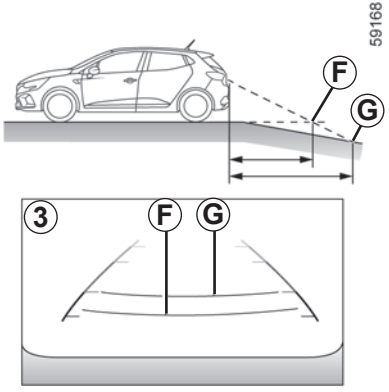

Reversing towards a steep downhill slope

The fixed guidelines ***3*** show the distances as further than they actually are.

Therefore, the objects shown on the screen are actually closer on the slope.

For example, if the screen displays an object at ***G***, the actual distance of the object is at ***F***.

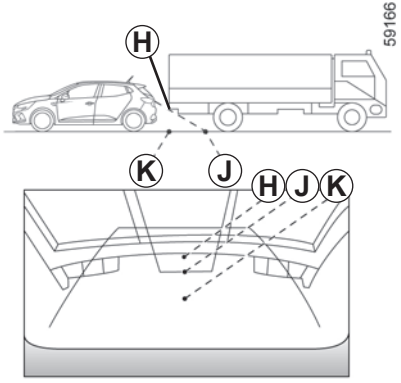

Reversing towards a protruding object

Position ***H*** seems further than position ***J*** on the screen.

However, position ***H*** is at the same distance as position ***K***.

The trajectory indicated by the fixed and mobile guidelines do not take into account the height of the object.

So there is a risk that the vehicle may collide with the object when reversing towards position ***K***.

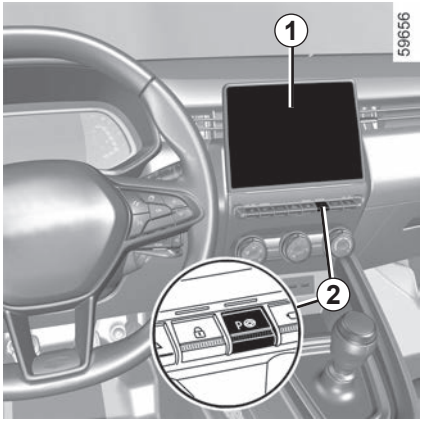

Using ultrasonic detectors as indicated by the ***3*** arrows installed in the vehicle bumpers, this function helps to find accessible parking spaces and assists in the parking manoeuvre.

Remove your hands from the steering wheel, you only control:

– the accelerator pedal;

– the brake pedal;

– the gear lever.

At any time, you can regain control by using the steering wheel.

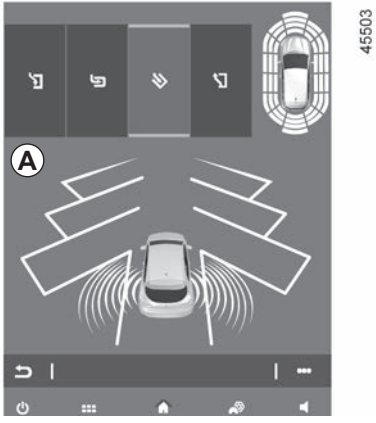

Switching on

With the vehicle stationary or driving at less than approximately 19 mph (30 km/h):

– press switch ***2***. The indicator light in switch ***2*** lights up and display ***A*** appears on the multimedia screen ***1***;

– set the direction indicators to the side of the vehicle where you want to park.

Special features

Ensure that the ultrasonic sensors indicated by the ***3*** arrows are not obscured (by dirt, mud, snow, a badly fitted/attached number plate), impacted, modified (including paintwork) or obstructed by any accessory fitted to the front or rear of your vehicle.

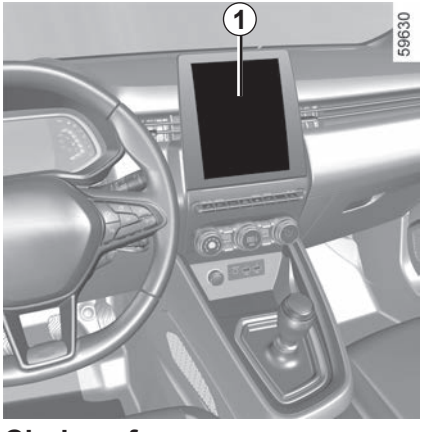

Choice of manoeuvre

The system can perform four types of manoeuvres:

– parallel parking;

– perpendicular parking;

– angle parking;

– moving out of a parallel parking space.

From the ***1*** multimedia screen, select the manoeuvre to carry out.

Note: when starting the vehicle, or after having successfully completed parallel parking using the system, the default manoeuvre proposed by the system is assistance in exiting a parallel parking space. In other cases, the default manoeuvre can be set from the multimedia screen ***1***. Please refer to the multimedia instructions for further information.

The system start up is accompanied by activation of the parking distance control and, on those vehicles equipped, the reversing camera or 360° camera to help the driver visualise the manoeuvre. ➥ 2.133, ➥ 2.140 and ➥ 2.73.

Operation

Parking

As long as the vehicle speed is less than 19 mph (30 km/h), the system searches for available parking spaces on the side of the vehicle chosen by the driver.

Note: if parking spaces are available on the other side of the vehicle, set the direction indicators to the other direction to enable the system to search for spaces.

Once a space has been found, it is displayed on the multimedia screen, indicated by a small letter “**P**”.

Drive slowly, with the direction indicators activated on the side where the space is available, until the message “Stop” is displayed and a beep sounds.

The space is then indicated on the multimedia screen by a capital letter “P”.

– Stop the vehicle;

– select reverse gear.

The indicator light lights up on the instrument panel and a beep sounds.

– Release the steering wheel;

– follow the instructions shown on the multifunction screen ***1***.

Your speed should not exceed around 4 mph (7 km/h).

Once the warning light on the instrument panel goes off and a beep sounds, the manoeuvre has been completed.

This function is an additional driving aid.

Therefore, it can under no circumstances replace the driver’s vigilance and responsibility during manoeuvres (the driver must always be ready to brake).

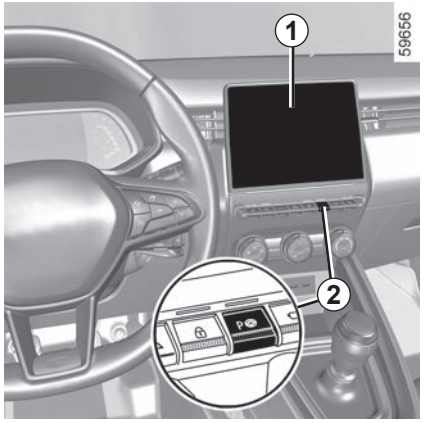

Exiting a parallel parking space

– Briefly press the ***2*** switch;

– select “Exit parallel parking space” mode;

– activate the direction indicators on the side you wish to go out of;

– press and hold switch ***2*** (approx. two seconds).

The indicator light lights up on the instrument panel and a beep sounds.

– Release the steering wheel;

– carry out manoeuvres at the front and rear by following the instructions shown on the multimedia screen ***1*** and using the parking distance control system alerts.

Your speed should not exceed around 4 mph (7 km/h).

Once the vehicle is in a position to exit the parking space, the warning light disappears from the instrument panel and a sound signal and message appear on the multimedia screen ***1*** to confirm that the manoeuvre is complete.

When manoeuvring, the steering wheel may turn quickly: do not put your hands inside, and make sure that nothing is caught inside.

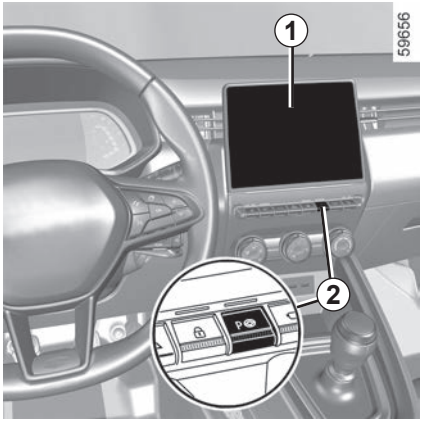

Suspending/Resuming the manoeuvre

The manoeuvre is suspended in the following circumstances:

– you take control of the wheel;

– the vehicle is stationary for too long;

– an obstacle in the direction of movement prevents the manoeuvre from being completed;

– the engine stops;

– a door or the luggage compartment is opened.

The warning light on the ***2*** switch turns off, the warning light disappears from the instrument panel and a sound signal confirms that the manoeuvre has been suspended.

The reason for suspending the manoeuvre will be displayed on the multimedia screen ***1***.

Make sure:

– you have released the steering wheel;
and
– that all doors and the boot are closed;
and
– that no obstacles are in the way of the direction of movement;
and
– that the engine is started.

If the warning light on the ***2*** switch flashes, this indicates that the system is once again available to resume the manoeuvre.

To resume the manoeuvre, press and hold the ***2*** switch.

The ***2*** switch warning light appears and warning light is displayed on the instrument panel.

Follow the instructions shown on the multimedia screen ***1***.

Cancelling the manoeuvre

The manoeuvre is cancelled in the following cases:

– the vehicle speed has exceeded 4 mph (7 km/h);

– by pressing switch ***2***;

– you have performed more than ten forwards/backwards movements in one manoeuvre;

– the parking distance control sensors are dirty or blocked;

– the vehicle wheels have skidded;

– the manoeuvre has been suspended for too long.

The ***2*** switch warning light and the warning light disappear from the instrument panel and a sound signal confirms that the manoeuvre has been cancelled.

The reason for cancelling the manoeuvre will be displayed on the multimedia screen ***1***.

This function is an additional driving aid.
This function is not under any circumstances intended to replace the due care and attention of the driver, who should at all times be in control of the vehicle.
Make sure that the manoeuvre complies with the applicable traffic regulations in your location.
The driver should always be ready for sudden incidents while driving: always ensure that there are no small, narrow moving obstacles (such as a child, animal, pushchair, bicycle, stone, post, towing equipment, etc.) in the blind spot when manoeuvring.

System servicing/repairs

– In the event of an impact, the alignment of the sensors may be changed and their operation may consequently be affected. Deactivate the function and consult an authorised dealer.
– Any work in the area where the sensors are located (repairs, replacements, exterior trim modifications, etc.) must be carried out by a qualified professional.

Only an authorised dealer is qualified to service the system.

In the event of system disturbance

Certain conditions may disrupt or impair operation of the system, such as poor weather conditions (snow, hail, ice, etc.).
In the event of the system behaving abnormally, deactivate it and consult an authorised dealer.

Risk of erroneous false alarms.

Limitations of the system operation

– The system cannot detect objects located in the sensor blind spots.
– Always visually check that the parking space proposed by the system is still available and contains no obstacles.
– The system should not be used when towing a trailer or when there is a towing or load carrying system on the vehicle or on surrounding vehicles.

Selector lever *1*

P: park

R: reverse

N: Neutral

D: automatic mode

L: “Low” mode (depending on the vehicle)

B : forward gear with increased regenerative braking (depending on the vehicle)

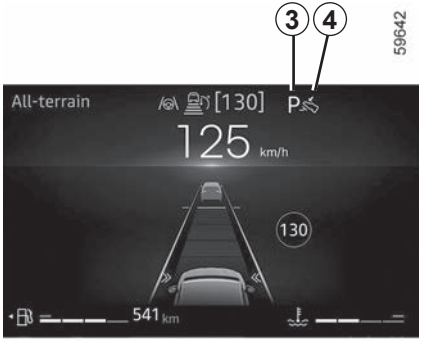

The ***3*** display on the instrument panel indicates the gear lever position engaged ***1***.

Note: press the ***2*** button to:

– exit position **P**;

– switch from position **D**, **L**, **B** or **N** to **R** or **P**;

– switch from position **D** to **L** or **B**.

Operation

With the vehicle stationary and the lever ***1*** in position **P**, start the vehicle.

On the E-Tech hybrid version, the READY message appears on the instrument panel.

To move out of position **P**, you must depress the brake pedal before pressing the unlocking button ***2***.

With your foot on the brake pedal (warning light ***4*** disappears from the display), shift out of **P** position, release the locking button ***2*** and engage **D** position.

Only engage D or R when the vehicle is stopped, with your foot on the brake and the accelerator pedal released.

The READY warning light is displayed on the instrument panel to indicate that the E-Tech hybrid system is in operation and ready to drive ➥ 2.4, ➥ 2.7.

Driving in automatic mode

Put lever ***1*** into position **D**.

In most road conditions you will encounter, you will not need to touch your lever again: the gears will change automatically at the right time and at the most suitable engine speed because the automatic system takes into account the vehicle load and road contour and adjusts itself to the particular driving style you have chosen.

Economical driving

When driving, always leave the lever in position **D**, keeping the accelerator pedal lightly depressed to ensure automatic gear changes at a lower engine speed.

Accelerating and overtaking

Depress the accelerator pedal firmly and fully (so that it goes beyond the kickdown point).

This will enable you to change down to the optimum gear within the engine range.

Driving in mode B

This mode enables driving with greater regenerative engine braking.

When releasing the accelerator pedal, the vehicle uses regenerative braking to slow down.

Thus the electric motor generates a higher electrical current which enables the traction battery to be recharged.

In **B** mode, the regenerative braking will be reduced if the accumulator is cold or completely charged.

The engine brake should under no circumstances be used as a substitute for the brake pedal.

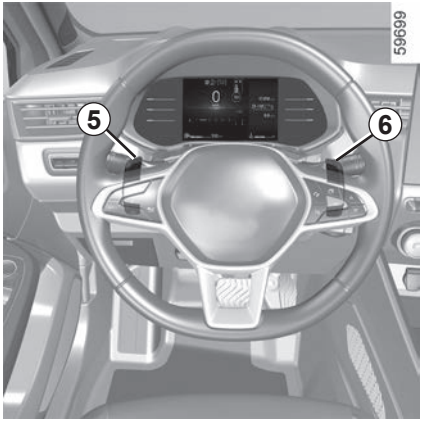

Gear changing paddles *5* and *6*

Depending on the vehicle, you can use paddles ***5*** and ***6*** to change gear when the lever is in position **D**.

5: Change to a lower gear.

6: Change to a higher gear.

The **P**, **N**, **L**, **R** and **B** positions cannot be engaged using the paddles.

Driving in manual mode

When driving in position **D** you can switch to manual driving mode using paddles ***5*** and ***6*** on the steering wheel.

Depending on the vehicle, two manual driving modes are available:

– **a "temporary" manual mode** which can be used to force a gear change by a brief press on one of the paddles. Driving mode **D** and the gear engaged will appear on the instrument panel.

  Note: the gearbox returns to automatic mode **D** automatically if the gear engaged is not optimal or if the paddles have not been used for a certain length of time.

– **a permanent manual mode activated** by pressing and holding either of the paddles. The driving mode **M** and the gear engaged will appear on the instrument panel display.

  Note: return to automatic mode by pressing and holding the right-hand paddle. Automatic mode **D** is displayed on the instrument panel.

In all situations:

– to move down through the gears, press the left-hand paddle;

– to move up through the gears, press the right-hand paddle.

Note: depending on the display, the **+** and **-** or and indicators will suggest moving up or down a gear.

Special cases

In certain driving conditions (resulting in, for example, engine protection, operation of the Electronic Stability Control programme: **ESC** etc.) the automated system may change the gear automatically.

Likewise, to prevent incorrect manoeuvres, a gear change may be refused by the automatic system: in this case the gear display flashes for a few seconds as a warning.

When facing uphill, to remain stopped, do not keep your foot on the accelerator.

Risk of overheating the automatic gearbox.

Check that the indicator light **P** on the instrument panel is activated before leaving the vehicle.

Risk of loss of immobilisation of the vehicle.

Special circumstances

If the road type or weather conditions (steep uphill slopes, sudden downhill slopes, deep snow, sand or mud) make it difficult to stay in automatic mode, depending on the vehicle, it is advisable:

– on vehicles equipped with steering wheel paddles: switch to manual mode using the paddles. This will prevent the automatic gearbox from changing gears repeatedly when climbing, and permit engine braking on long descents.

– on vehicles not equipped with steering wheel paddles: use “Low” mode to enable, at low speed below 31 mph (50 km/h), driving on surfaces with low grip (snow, mud, etc.), climbing a slope or engine braking during a hill descent. To do this, set the lever to position **L**.

Note: in “Low” mode, the variations in engine speed are continuous and the accelerations are more linear.

To avoid the engine stalling in very cold weather, wait a few seconds before disengaging position **P** or **N** and setting the lever to **D**, **R**, **L** or **B**.

In the event of an impact to the underside of the vehicle (e.g.: striking a post, raised kerb or other street furniture), this may result in damage to the vehicle (e.g.: twisted axle), the electrical circuit or the traction battery.

Do not touch the circuit elements or any fluids or liquids.

To prevent any risk of accident, have your vehicle checked by an authorised dealer.

Risk of serious injury or electric shock and risk to life.

Parking the vehicle

When the vehicle is stopped, move the lever to position **P** while keeping your foot on the brake pedal: the gearbox is in neutral and the drive wheels are mechanically locked by the driveshaft.

Ensure that the electronic parking brake is engaged.

Maintenance period

Refer to the maintenance document for your vehicle or consult an Approved Dealer to check whether the automatic gearbox requires scheduled maintenance.

If it does not need to be serviced, there is no need to top up the oil.

P position must only be engaged when the vehicle is stationary.

Operating faults

– **When driving**, if the “WARNING: Check Gearbox” message appears on the instrument panel, it indicates a fault.

  Contact your approved Dealer as soon as possible;

– **when driving,** if the message “WARNING: Gearbox Overheating” appears on the instrument panel, stop as soon as possible to let the gearbox cool down and wait for the message to disappear;

– **breakdown recovery of a vehicle fitted with an automatic gearbox** ➥ 5.40.

For safety reasons, do not switch off the ignition before the vehicle has come to a complete standstill.

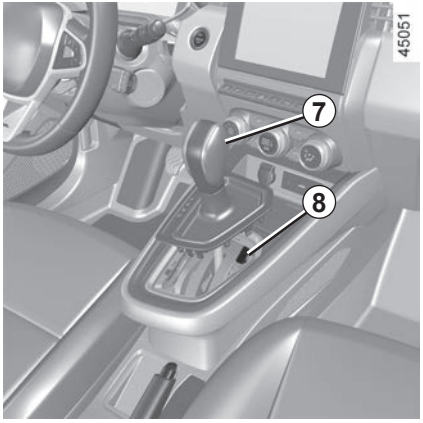

When setting off, if the lever is stuck in **P** when you press the brake pedal (e.g. battery fault), it is possible to manually release the lever to unblock the drive wheels.

To do this, unclip the base of the gaiter and press the ***8*** push button while simultaneously pressing the ***7*** button on the lever to unlock the lever and shift to position **N**.

Contact an authorised dealer as soon as possible.

EMERGENCY CALL (1/3)

If the vehicle is equipped, the emergency call function can be used to call the emergency services (without charge) automatically or manually in the event of an accident or illness, reducing the time it takes for the emergency services to arrive.

Note: the emergency call operates:

– in countries covered by the associated telephone emergency services and infrastructure compatible with the system;

– depending on the network coverage in the geographical region where the vehicle is being driven.

If you use the emergency call function to report an accident which you have witnessed, this implies stopping where traffic conditions allow in order for the emergency services to locate your vehicle and therefore the location of the reported accident.

In all cases, comply with local legislation.

Use the emergency call only in the event of an emergency you are involved in, if you witness an accident or if you feel ill.

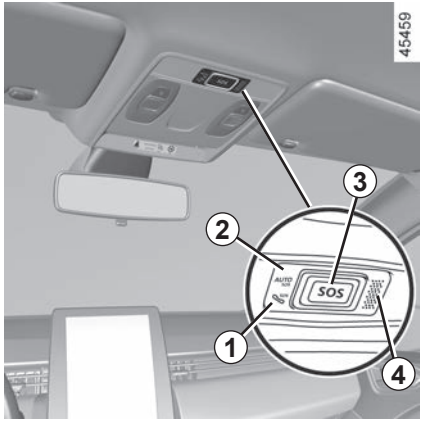

1 System operation warning light:
- green: operational (network available);
- off: non-operational (network unavailable);
- red: operating fault;
- green flashing: call in progress.

2 Automatic mode warning light.

3 **SOS** button.

4 Microphone.

5 Speaker.

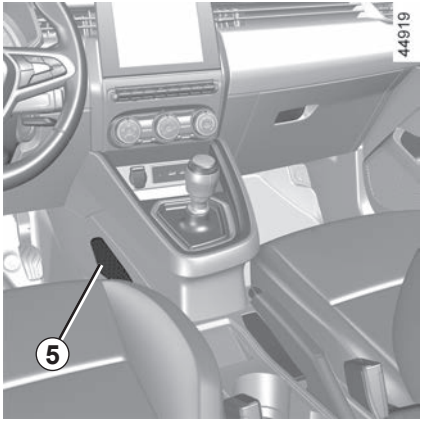

A call is always made as follows:

– the call is set up with the emergency services;

– send data related to the incident (vehicle identification plate, local time of the call, last positions, direction of the vehicle) ;

– voice communication with the emergency services;

– if necessary, emergency assistance is called.

Emergency call has two modes:

– automatic mode;

– Manual mode.

Automatic mode

If the automatic mode ***2*** warning light appears in green this confirms that the automatic system is activated.

The emergency call starts automatically in the event of an accident that has required the activation of the protective equipment (seat belt pretensioners, airbag etc.).

In the event of an accident, if the location and traffic conditions permit, stay close to the vehicle in order to be able answer the call centre quickly if necessary.

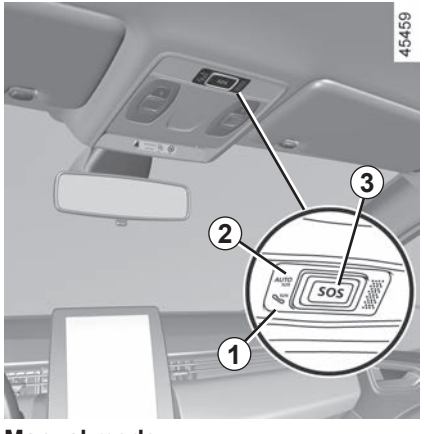

Manual mode

The emergency call is carried out by:

– pressing and holding the ***3*** button for at least three seconds;

or

– pressing the ***3*** button five times within ten seconds.

In the event of unintended operation, it is possible to cancel the call by pressing the ***3*** button for around two seconds, before the call is connected to the call centre.

Once a call is established, only the call centre can end the call.

Test mode
(depending on local laws)

Test mode is reserved exclusively for Approved Dealers to check that the emergency call feature is working properly.

To activate test mode:

– briefly press the ***3*** button three times;

– wait approximately 15 seconds;

– briefly press the ***3*** button three times.

Exit from test mode is automatic.

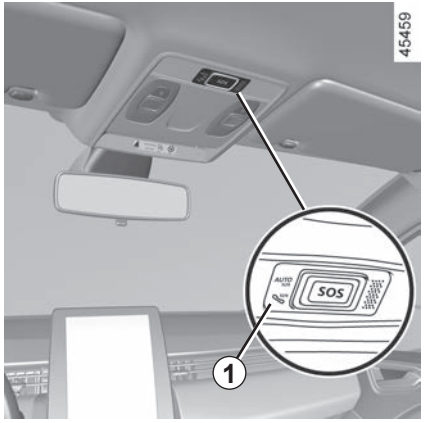

Operating faults

In some cases, the emergency call may not work (e.g. low battery).

If the system detects an operating fault, the ***1*** warning light illuminates in red for more than 30 minutes. Contact your approved Dealer as soon as possible;

The system operates with a dedicated battery. The battery service life is approximately four years (the ***1*** warning light lights up in red to warn you when approaching expiry).
Consult an approved dealer

To guarantee your safety and the proper operation of the system, any operation carried out on the battery (removal, disconnection, etc.) must be carried out by a qualified specialist.

Risk of serious burns or electric shocks.

You must respect the replacement intervals (without exceeding them) as stated in the maintenance document.

The battery is a specific type. Please ensure it is replaced with the same type.

Call an approved Dealer.

Without the emergency call feature, the system is not trackable and will not be under constant surveillance. Data is automatically and constantly erased, and the system stores only the last three positions of the vehicle.

According to legislation relevant to the country, data is only sent in the event of an emergency call. Data sent to the call centre is treated according to the personal data protection laws applicable in the country where you are located. The system stores activity history data for 13 hours only.

The vehicle owner has the right of access to their data. They can request that the data be corrected, deleted or locked.

Section 3: Your Comfort

MULTI-SENSE 3.2
Air Vents 3.4
Manual air conditioning, heating system 3.6
Automatic climate control 3.12
Air conditioning: information and advice on use 3.16
Air conditioning: information and advice on use 3.17
Multimedia equipment 3.18
Electric windows 3.20
Sun visor 3.23
Interior lighting 3.24
Passenger compartment storage, fittings 3.27
Accessories socket 3.32
Rear headrests 3.33
Rear bench seat: functions 3.34
Luggage compartment 3.35
Rear parcel shelf 3.36
Luggage compartment storage 3.37
Transporting objects in the luggage compartment 3.38
Transporting objects: towbar 3.39
Roof bars, spoiler 3.40

MULTI-SENSE (1/2)

The “MULTI-SENSE” system enables a choice between three driving modes that can be used to control driving, ambient lighting, comfort and engine sound (depending on the vehicle):

– the “Eco” and “Sport” modes are pre-configured and can be partially customised (ambient lighting etc.);

– the “My Sense” mode is customisable.

The drive modes affect the:

– power-assisted steering;

– Electronic Stability Program;

– the response of the engine and gearbox.

They also affect the:

– the lighting in the passenger compartment and of the instrument panel;

– information displayed on the multimedia screen and, depending on the mode selected, on the instrument panel;

– depending on the vehicle, the engine sound.

47663

Engine settings are specific to each of the driving modes and cannot be customised.

“Eco” mode

“Eco” mode focuses on energy saving.

The steering is smooth, engine and gearbox management enable fuel consumption to be reduced ➥ 3.2.

In all modes, it is possible to change the colour of the ambient lighting and to revert to the default settings.

The instrument panel style can be modified only using “My Sense” mode.

“Sport” mode

This mode enables an increased responsiveness from the engine and the gearbox.

The steering is firmer.

“My Sense” mode

Using standard default vehicle settings, this mode can be used to manually configure driving, ambient lighting, comfort and engine sound (depending on the vehicle).

After the engine is switched off, the vehicle will always restart in “My Sense” mode.

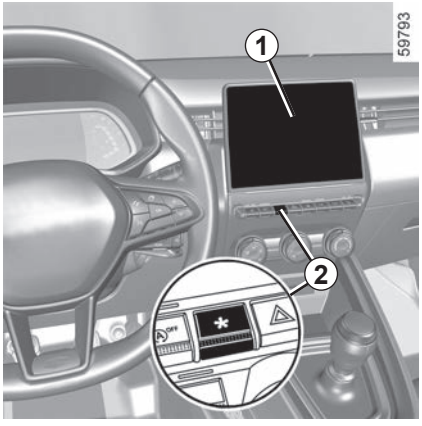

Accessing the menu

You can access “MULTI-SENSE” (depending on the vehicle):

– from the multimedia screen ***1***;

– using the ***2*** switch.

Please refer to the multimedia instructions for further information.

AIR VENTS, air outlets (1/2)

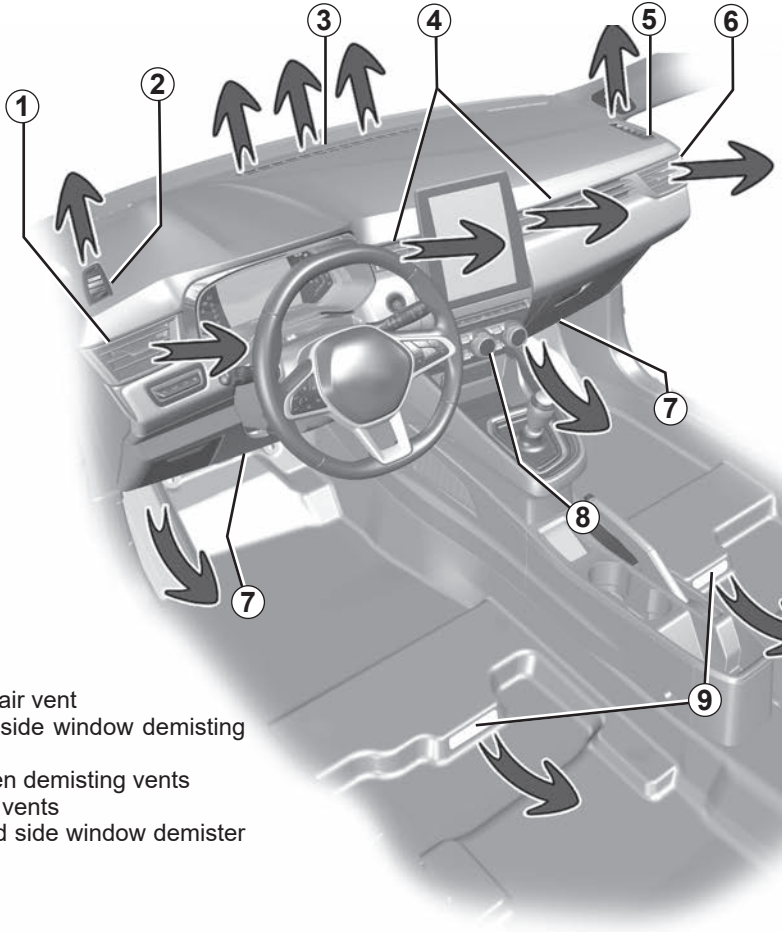

1 Left-hand air vent
2 Left-hand side window demisting vent
3 Windscreen demisting vents
4 Centre air vents
5 Right-hand side window demister outlet
6 Right-hand air vent
7 Passenger footwell heater outlets
8 Control panel
9 Footwell heater outlets for rear passengers (depending on the vehicle)

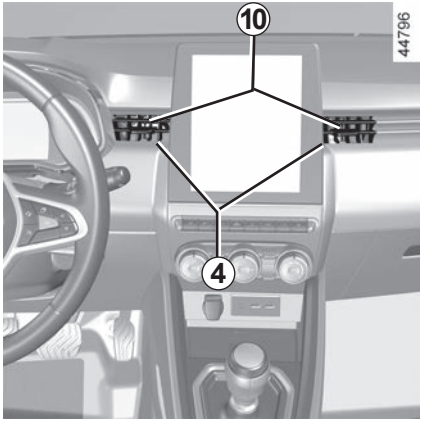

Centre *4* and side vents *1* and *6*

Air flow

To close: move the cursor ***10*** towards the outside of the vehicle beyond the resistance point.

To open: move the cursor ***10*** towards the inside of the vehicle.

Direction

Move the cursor ***10*** to the desired position.

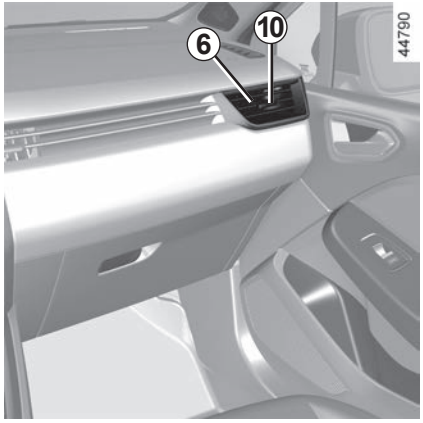

Do not attach any objects to the air vents (e.g. telephone mounting).

Risk of damage.

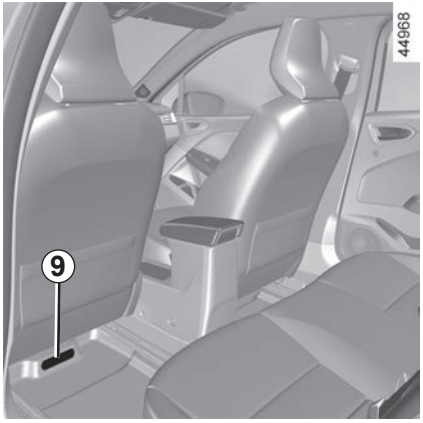

Rear seats

(depending on vehicle)

Passenger footwell heater outlets ***9***.

Do not add anything to the vehicle's ventilation circuit (for example, to remove bad odours).

There is a risk of damage or of fire.

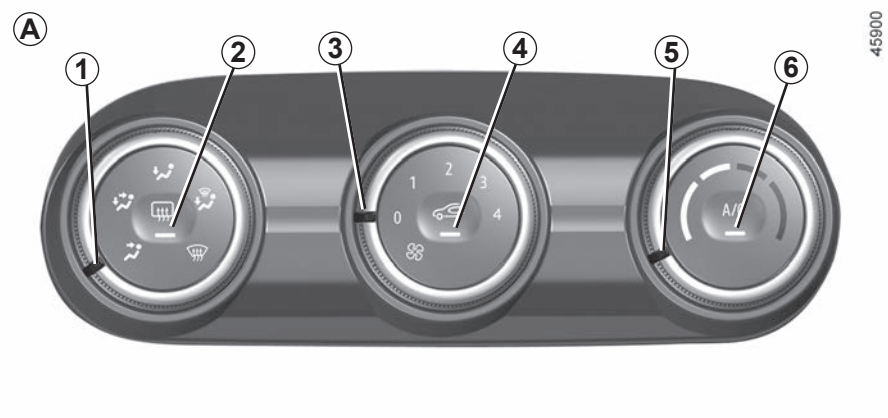

Controls *A*

(depending on vehicle)

1 Distribution of air in the passenger compartment.

2 De-icing/demisting of the rear screen and, depending on the vehicle, the rear view mirrors.

3 Adjusting the ventilation fan speed.

4 Air recirculation.

5 Adjusting the air temperature.

6 Air conditioning.

Distribution of air in the passenger compartment

There are five air distribution options. Turn control ***1*** to choose the distribution option.

The air flow is directed to the windscreen and the front side window demisting vents.

The air flow is distributed between front side window demisting vents, the windscreen demisting vents and the footwells.

The air flow is directed mainly towards the footwells.

The air flow is directed towards the dashboard air vents, the front footwells and, depending on the vehicle, the second row footwells.

The air flow is mainly directed to the dashboard air vents.

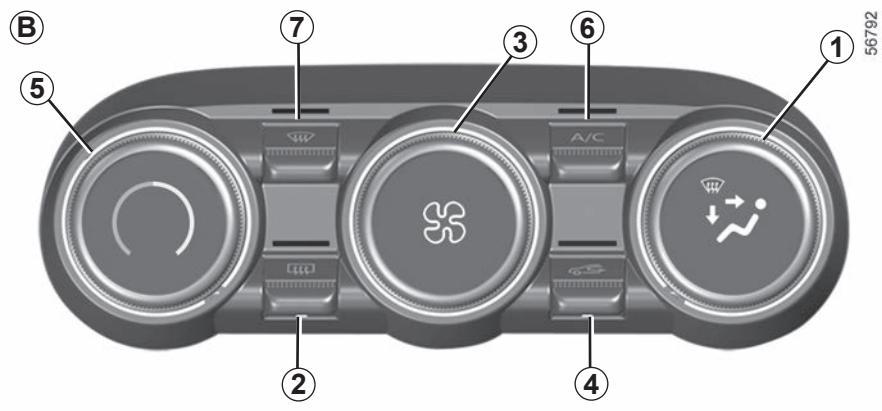

Controls *B*

(depending on the vehicle)

1 Distribution of air in the passenger compartment.

2 De-icing/demisting of the rear screen and, depending on the vehicle, the rear view mirrors.

3 Adjusting the ventilation fan speed.

4 Air recirculation.

5 Adjusting the air temperature.

6 Air conditioning control.

7 “Clear View” function.

Switching air conditioning on or off

Activation is not possible if the ***3*** control is set to “**0**” (control ***A***) or “**OFF**” (control ***B***).

Press the ***6*** button to deactivate the air conditioning. The button’s warning light will go out.

The air conditioning system is used for:

– lowering the temperature inside the passenger compartment;

– eliminating condensation more quickly.

Air recirculation (isolation of the passenger compartment)

Air recirculation is for:

– isolating the vehicle from the external atmosphere (driving in polluted areas, etc.);

– to cool the passenger compartment temperature more quickly when air conditioning is activated.

This function is managed automatically but you can also activate it manually. In this case, the operation is confirmed by the button's warning light ***4***.

Manual use

Press button ***4***, the button's warning light comes on.

Prolonged use of this position may lead to odours, caused by non-renewal of air, and the formation of condensation on the windows. To avoid this, air recirculation is disabled automatically after a certain time.

Stopping the system

Turn the ***3*** control to "**OFF**" or "**0**" to switch off the system or press the ***4*** button. To start it, turn the ***3*** control to adjust the fan speed.

Clear View function

Press the ***7*** button: the integrated indicator light comes on.

This function quickly demists and de-ices the windscreen, the rear screen, the front side windows, and the door mirrors (depending on the vehicle). It automatically activates the air conditioning and rear screen de-icing functions.

Press button ***2*** to stop the heated rear screen operating, and the integrated indicator goes out.

To exit this function, press button ***7*** or ***5***.

Using the demisting/de-icing function will disable the air recirculation.

Switching air conditioning on or off

In automatic mode, the system switches the air conditioning system on or off, depending on the climate conditions.

Activation is not possible if the ***3*** control is set to "**0**" (control ***A***) or "**OFF**" (control ***B***).

Press the ***6*** button to deactivate the air conditioning. The button's warning light will go out.

The air conditioning system is used for:

– lowering the temperature inside the passenger compartment;

– eliminating condensation more quickly.

Fuel consumption increases when the air conditioning is being used (switch it off when it is not required).

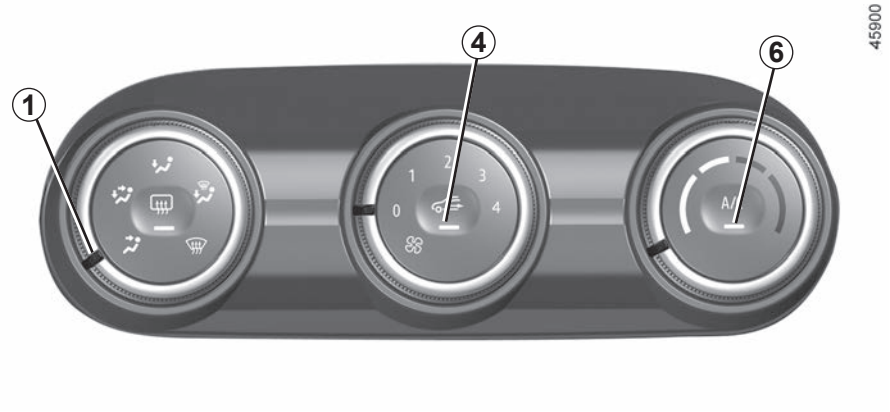

Switching the air recirculation on

Press button ***4***: the button's warning light comes on. Under these conditions, air is taken from the passenger compartment and is recirculated, with no air being taken from outside the vehicle.

Air recirculation is for:

– isolating the vehicle from the external atmosphere (driving in polluted areas, etc.);

– to cool the passenger compartment temperature more quickly when air conditioning is activated.

If the air conditioning is not activated ("**A/C**" warning light on the ***6*** button goes off), prolonged use of recirculated air may cause mist to form on the side windows and windscreen as well as other problems due to the presence of non-recirculated air in the passenger compartment. To avoid this, air recirculation is disabled automatically after a certain time.

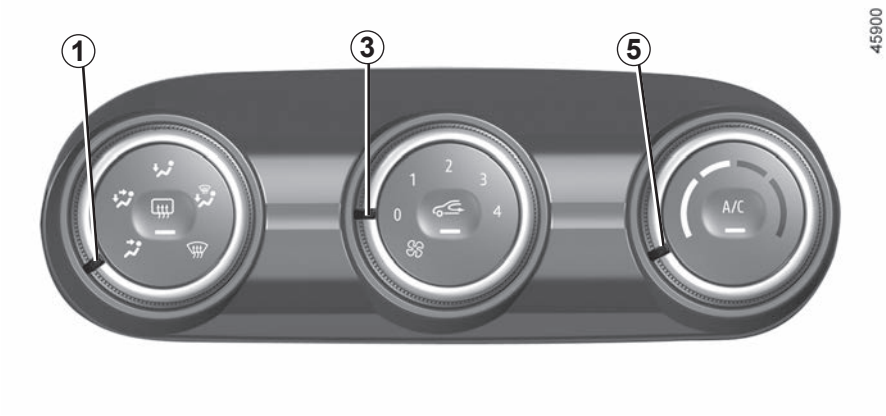

Adjusting the ventilation speed

Move the ***3*** control to adjust the amount of air blown. If you want to shut off the flow of air, set the ***3*** control to "**0**" (control ***A***) or "**OFF**" (control ***B***).

The system is deactivated: the ventilation speed is zero (vehicle stationary). You can, however, still feel a slight flow of air when the vehicle is moving.

Using position on the ***1*** control will disable the air recirculation function in order to prevent misting of the windscreen.

Adjusting the air temperature

Turn control ***5*** to obtain the desired temperature. The further towards the red the slide is, the higher the temperature will be.

When the air conditioning system is used for long periods, it may begin to feel cold. To increase the temperature, turn control ***5*** to the right.

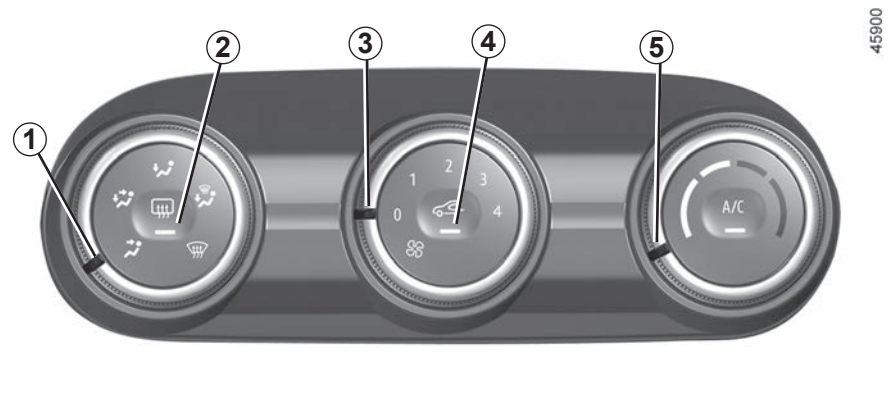

Rear screen de-icing/ demisting

With the engine running, press button ***2***. The operating tell-tale comes on.

This function permits rapid demisting/ de-icing of the rear screen and de-icing of the door mirrors (on equipped vehicles).

To exit this function, press button ***2*** again. Warning light goes out.

Demisting automatically stops.

Rapid demisting

Turn controls ***1***, ***3*** and ***5*** to:

– demisting ;

– the fan speed in position **3** or **4**;

– maximum temperature.

Press the ***4*** button to deactivate the air recirculation (warning light off).

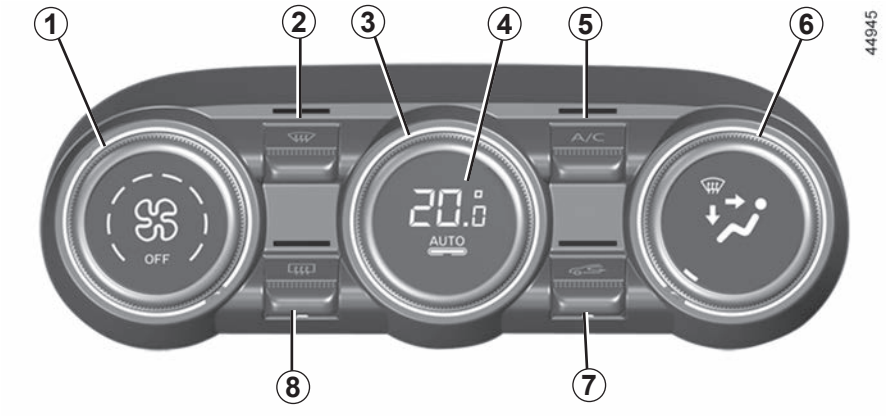

The controls

(depending on the vehicle)

1 Adjusting the ventilation fan speed.

2 “Clear View” function.

3 Adjusting the air temperature.

4 Automatic mode.

5 Air conditioning control.

6 Distribution of air in the passenger compartment.

7 Air recirculation.

8 De-icing/demisting of the rear screen and, depending on the vehicle, the rear view mirrors.

Automatic mode

The automatic climate control system guarantees comfort in the passenger compartment and good visibility (except in the event of extreme conditions), while optimising consumption. The system controls the ventilation speed, air distribution, air recirculation, and starting and stopping the air conditioning and air temperature.

AUTO: allows the selected comfort level to be best attained, depending on the exterior conditions. Press button ***4***.

Adjusting the ventilation speed.

In automatic mode, the system uses the most suitable amount of air to reach and maintain the desired comfort level.

You can still adjust the ventilation speed by turning control ***1*** to increase or reduce the ventilation speed.

Adjusting the air temperature

Turn control ***3*** to obtain the desired temperature.

Turning the control to the right increases the temperature.

Any action on a button other than the **AUTO** button triggers deactivation of automatic mode.

Clear View function

Press the ***2*** button: the integrated indicator light comes on.

This function quickly demists and de-ices the windscreen, the rear screen, the front side windows, and the door mirrors (depending on the vehicle). It automatically activates the air conditioning and rear screen de-icing functions.

Press button ***8*** to stop the heated rear screen operating, and the integrated indicator goes out.

To exit this function, press button ***2*** or ***4***.

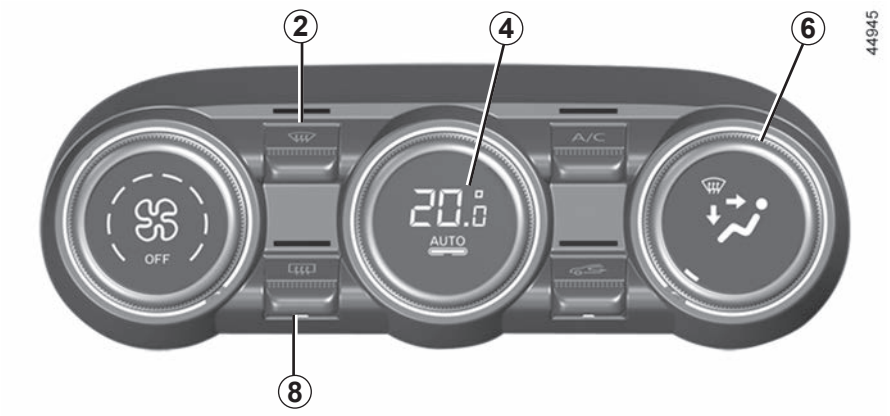

Adjusting the distribution of air in the passenger compartment

Turn control ***6***. The integrated warning light in the button comes on.

All the air is then directed to the windscreen and front side window demisting vents.

The air flow is distributed between front side window demisting vents, the windscreen demisting vents and the footwells.

The air flow is directed towards the dashboard air vents, the front footwells and, depending on the vehicle, the second row footwells.

The air flow is mainly directed to the dashboard air vents.

The air flow is directed mainly towards the footwells.

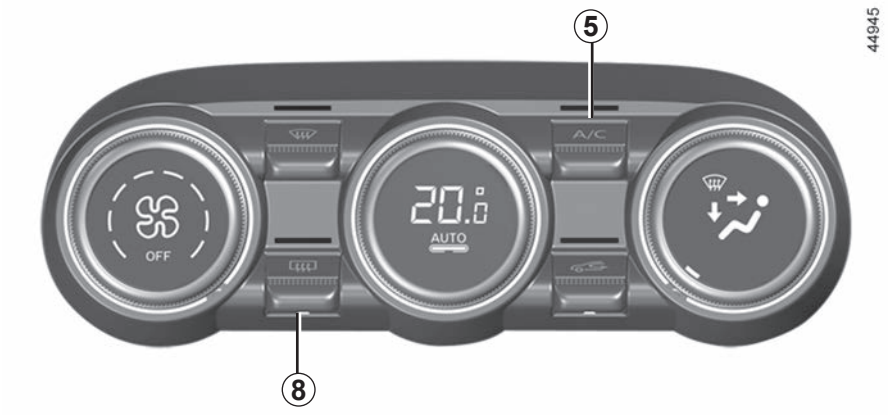

Rear screen de-icing/ demisting

Press the ***8*** button: the integrated indicator light comes on. This function enables rapid demisting or de-icing of the rear screen and de-icing of the rear view mirrors (on equipped vehicles).

To exit this function, press button ***8*** again. Demisting automatically stops.

Switching air conditioning on or off

In automatic mode, the system switches the air conditioning system on or off, depending on the climate conditions.

Press the ***5*** button to deactivate the air conditioning. The integrated indicator light goes off.

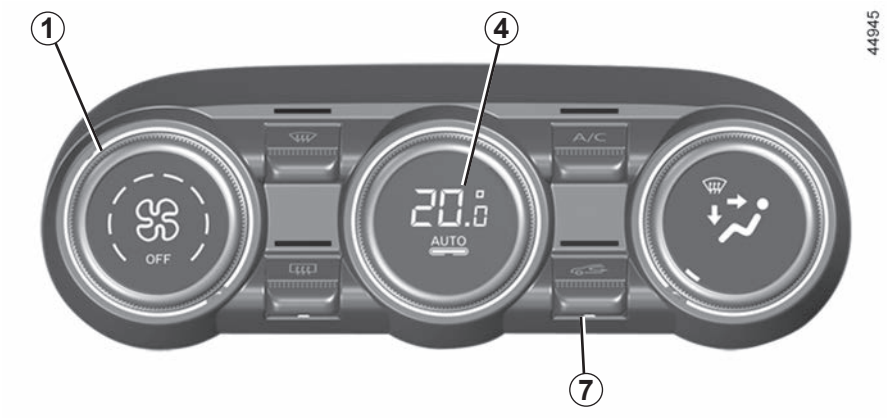

Air recirculation (isolation of the passenger compartment)

This function is managed automatically but you can also activate it manually. In this case, the operation is confirmed by a warning light on the button **7**.

Using the demisting/de-icing function will disable the air recirculation.

Manual use

Press the **7** button: the integrated indicator light comes on.

Prolonged use of this position may lead to odours, caused by non-renewal of air, and the formation of condensation on the windows.

To avoid this, air recirculation is disabled automatically after a certain time.

Stopping the system

Turn the control ***1*** to "**OFF**" to stop the system. To start it, turn the control ***1*** again, then adjust the fan speed or press the button ***4***.

Fuel consumption increases when the air conditioning is being used (switch it off when it is not required).

Advice on use

In some situations (air conditioning off, air recirculation activated, ventilation speed at zero or low etc.), you may notice that condensation starts to form on the windows and windscreen.

If there is condensation, use the **"Clear View"** function to remove it, then use the air conditioning in automatic mode to stop it forming again.

Do not add anything to the vehicle's ventilation circuit (for example, to remove bad odours).

There is a risk of damage or of fire.

Fuel consumption

You will normally notice an increase in fuel consumption (especially in town) when the air conditioning is operating.

For vehicles fitted with air conditioning with no automatic mode, switch off the system when it is not required.

Advice for reducing consumption and helping to preserve the environment

Drive with the air vents open and the windows closed. If the vehicle has been parked in the sun, open the doors for a few moments to let the hot air escape before starting the engine.

Maintenance

Refer to the Maintenance Document for your vehicle for the inspection frequency.

Use the air conditioning system regularly, even in cold weather, running it at least once a month for approximately 5 minutes.

Operating faults

As a general rule, contact your approved dealer in the event of an operating fault.

- **Reduction in de-icing, demisting or air conditioning performance.** This may be caused by the passenger compartment filter cartridge becoming clogged.
- **No cold air is being produced**. Check that the controls are set correctly and that the fuses are sound. Otherwise, switch off the system.

Presence of water under the vehicle

After prolonged use of the air conditioning system, it is normal for water to be present under the vehicle. This is caused by condensation.

Do not open the refrigerant fluid circuit. The fluid may damage eyes or skin.

AIR CONDITIONING: information and operating instructions (2/2)

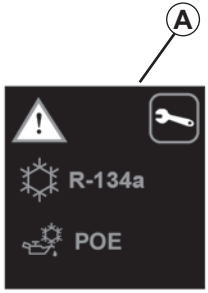

49694

The refrigerant fluid circuit (of which some components are hermetically sealed) may contain fluorinated greenhouse gases.

Depending on the vehicle, you will find the following information on label ***A*** affixed inside the engine compartment.

The presence and location of the information on label ***A*** depends on the vehicle.

Do not open the refrigerant circuit. The fluid may damage eyes or skin.

Before carrying out any action in the engine compartment, you must switch off the ignition. ➥ 2.4 or ➥ 2.4.

Type of refrigerant fluid

Type of oil in the air conditioning circuit

Inflammable product

Consult the driver's handbook

Maintenance

x.xxx kg	Quantity of refrigerant fluid present in the vehicle.
GWP xxxxx	Global Warming Potential (CO2 equivalent).
CO2 eq x.xx t	Quantity in weight and in CO2 equivalent.

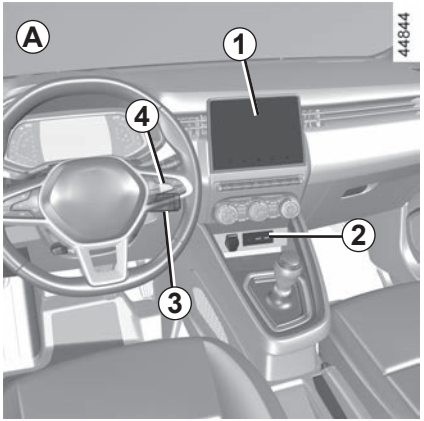

Multimedia systems *A*, *B* or radio *C*

The location and operation of equipment may vary according to the vehicle.

1 Multimedia screen.

2 Multimedia sockets.

3 Steering column controls.

4 Steering wheel controls.

Please refer to the multimedia instructions for further information.

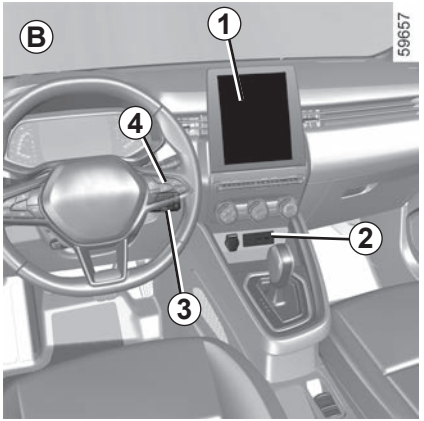

Multimedia sockets *2*

You can use the USB sockets to access the multimedia content of your accessories and to update the system.

The various sources can be selected using the multimedia screen or the radio and the steering column controls.

Depending on the vehicle, you are equipped with either one or two USB sockets.

The sockets USB can also be used to recharge accessories with a maximum power rating of 12 Watts (5 Volts) per socket, which have been approved by our Technical Department.

The JACK socket enables the radio to be used with an auxiliary cable.

Connect accessories with a maximum power of 12 watts only.

Fire hazard.

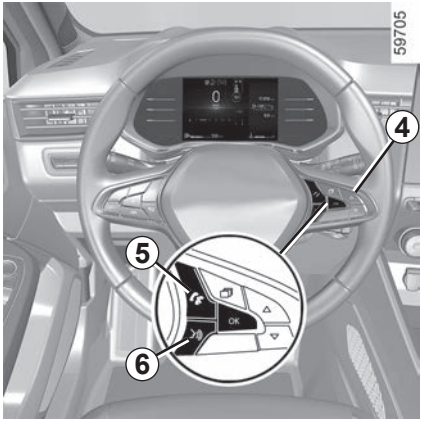

Steering column controls 4

On those vehicles equipped, you can use the hands-free telephone controls ***5*** and voice recognition ***6***.

Microphone *7*

Using the telephone

We remind you of the need to conform to the legislation in force concerning the use of such equipment.

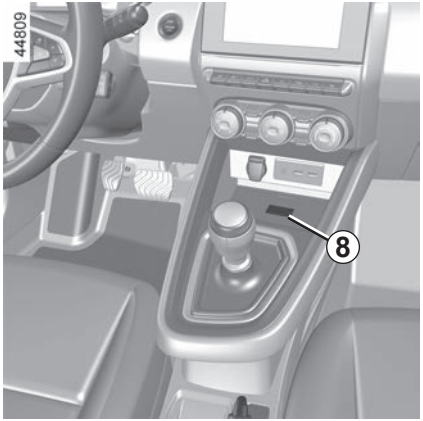

Wireless charger *8*

➥ 3.27

ELECTRIC WINDOWS (1/3)

These systems operate with the ignition on or off, until one of the front doors is opened (limited to about 3 minutes).

Driver's responsibility

Never leave your vehicle with the card or key inside, with a child, adult who is not self-sufficient or a pet in the vehicle, even for a short while.

They may pose a risk to themselves or to others by starting the engine or activating equipment (such as the gear lever or electric windows).

If any part of the body becomes trapped, reverse the direction of the window immediately by pressing the relevant switch.

Risk of serious injury.

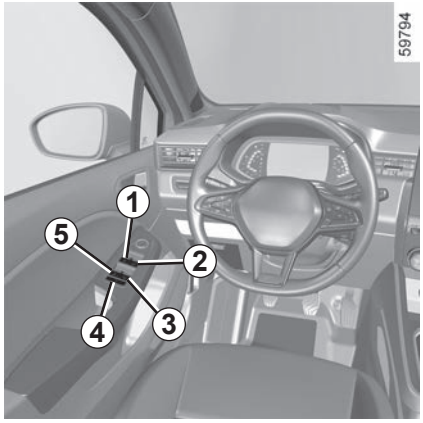

One-touch electric windows

Briefly press or pull a window switch as far as it will go: the window will be raised or lowered fully. Pressing the switch again stops the window moving.
Note: the rear windows do not open fully

From the driver's seat, use switch:
– ***1*** for the driver's side;
– ***2*** for the front passenger's side;
– ***3*** and ***5*** for the rear passengers.
From the passenger seats, use switch ***6***.

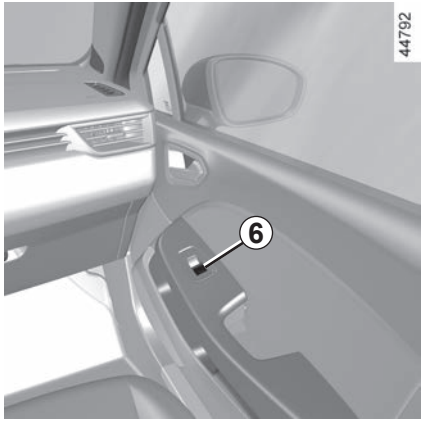

Avoid resting any objects against a half-open window: there is a risk that the electric window could be damaged.

Passenger safety

The driver can prevent operation of the rear electric windows by pressing switch ***4***.

A confirmation message is displayed on the instrument panel.

Impossible to operate the one-touch electric window

The one-touch electric window is equipped with heat protection: if you press the switch for the window more than sixteen consecutive times it goes into protection mode (locking the window).

You can:

– use the electric window switch briefly and with intervals of approximately 30 seconds;
– with the engine running, the window will be unlocked after approximately 20 minutes of inaction on the electric window switch.

Note: if the window detects resistance when closing (e.g. by a tree branch etc.), it stops and then lowers again by a few centimetres.

When closing the windows, ensure that no part of the body (arm, hand, etc.) is protruding from the vehicle.

Risk of serious injury.

Remote control window closing

When the doors are locked from the outside, if you **double press the locking button on the driver's door** in hands-free mode**, on the card or, depending on the vehicle, on the key**, all of the windows equipped with a one-touch electric window will close automatically.

It is recommended that the user only operates the system when the vehicle can be seen clearly and no one is inside.

Operating faults

In case of a fault when closing a window, the system reverts to normal mode: pull the switch concerned up as often as necessary to fully close the window (the window will close gradually), hold the switch (still on the closing side) for one second then lower and raise the window fully to reinitialise the system.

If necessary, contact your authorised dealer.

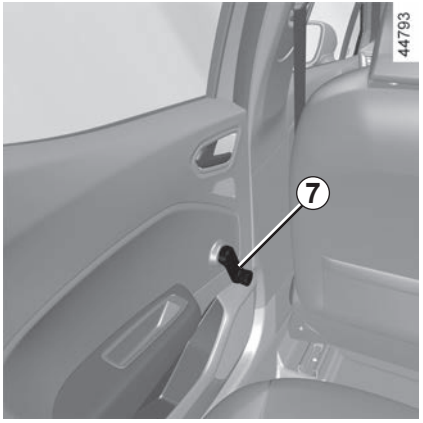

Manual window winder controls

Turn handle **7**.

SUN VISOR

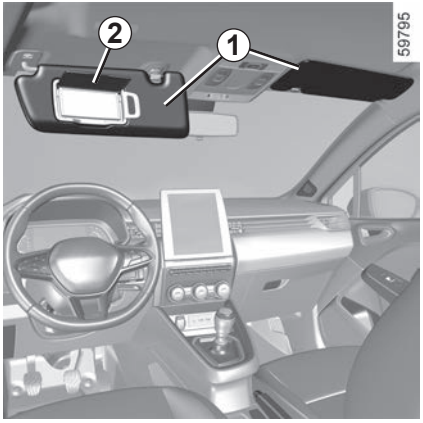

Front sun visor

Lower sun visor ***1***.

Courtesy mirrors

(depending on the vehicle)

Lift the cover ***2***.

When driving, ensure the courtesy mirror cover is closed.

Risk of injury.

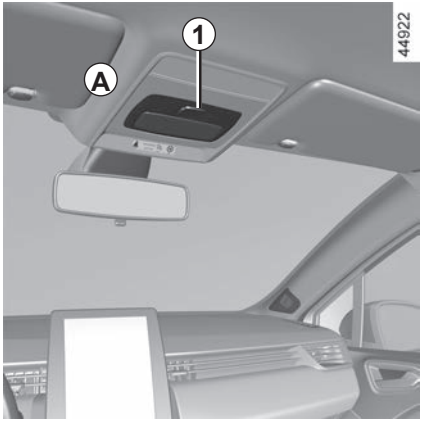

Courtesy light *A*

Press switch ***1*** for:

– permanent lighting;

– lighting controlled by the unlocking of the vehicle or by opening one of the doors. This switches off after a time delay, once the doors concerned have been closed correctly;

– lighting switches off immediately.

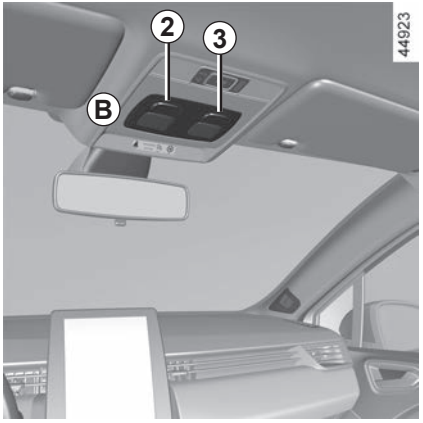

Courtesy light *B*

Press the ***2*** switch for the driver and press ***3*** for the front passenger to enable:

– permanent lighting;

– lighting controlled by the unlocking of the vehicle or by opening one of the doors. This switches off after a time delay, once the doors concerned have been closed correctly;

– lighting switches off immediately.

Map reading light
(depending on the vehicle)

Press the ***4***, ***5*** or ***6*** switch to enable:

– permanent lighting;

– lighting switches off immediately.

Note: on vehicles fitted with a multimedia screen, you can use the multimedia screen to deactivate/activate the reading lights which switch on when the doors or luggage compartment are opened. ➥ 1.103.

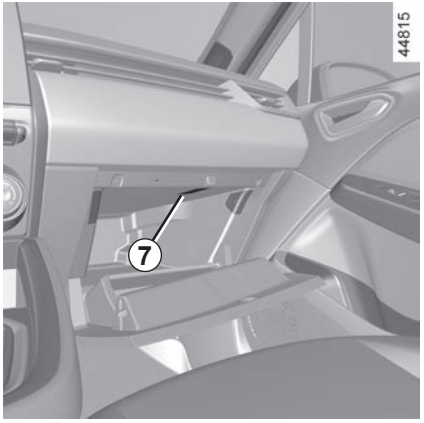

Glove box light

Depending on the vehicle, the ***7*** light switches on when the cover is opened.

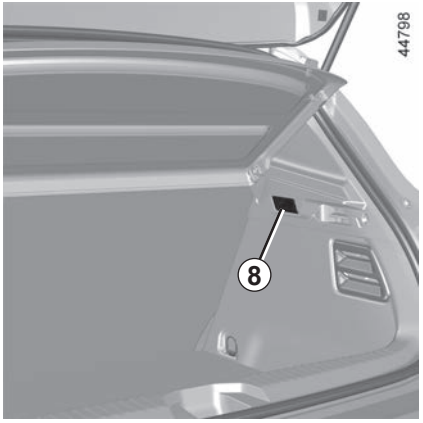

Luggage compartment light

Light ***8*** comes on when the luggage compartment is opened.

Unlocking and opening the doors or tailgate switches on the timed courtesy lights and lights.

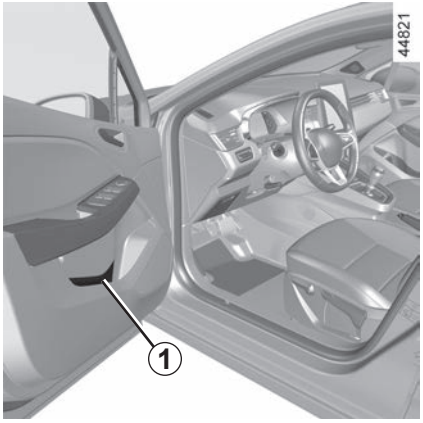

Front door storage pockets *1*

It can hold a 1.5 litre bottle.

Nothing should be placed on the floor area in front of the driver as such objects may slide under the pedal during braking manoeuvres, thus obstructing its use.

Open storage compartment *2*

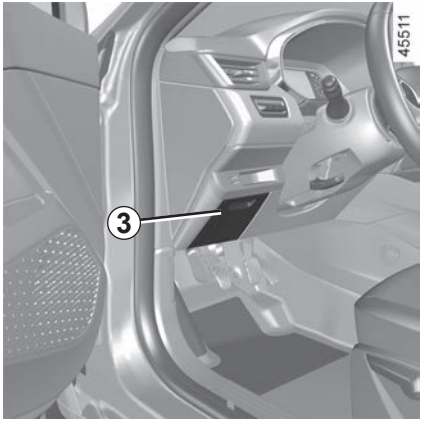

Dashboard storage compartment *3*

Open and move the flap to access the storage compartment

Ensure that no hard, heavy or pointed objects are placed in the “open” storage compartments in such a way that they may fall onto passengers during sudden turning, braking or in the event of an accident.

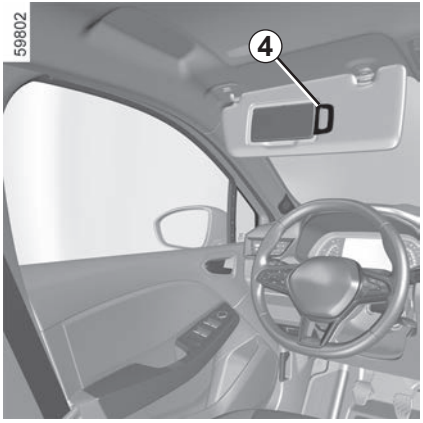

Sun blind storage compartment *4*

This can be used for storing motorway tickets, cards, etc.

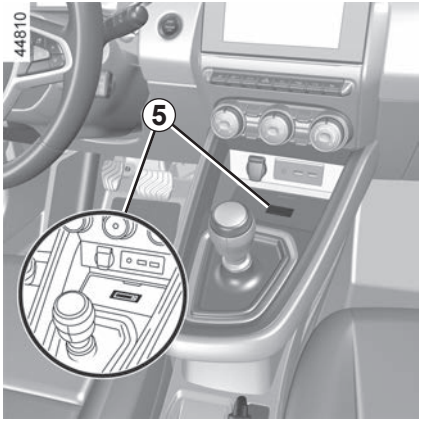

Centre console storage compartment/induction charging zone *5*

For more information on the induction charging zone, please refer to the multimedia instructions.

Depending on the country and the subscription, the induction charging area 5 is also the placement area for smartphones equipped with a digital key ➥ 1.23.

It is essential not to leave any objects (start-up card, USB drive, SD card, credit card, jewellery, keys, coins, etc.) in the induction charging area ***5*** whilst charging your phone.

Remove all magnetic cards or credit cards from the case before positioning your telephone in the induction charging area ***5***.

Objects left in the induction charging area ***5*** may overheat.

You are advised to place them in the areas provided for this purpose (storage compartment, sun visor compartment etc.).

Ensure that no hard, heavy or pointed objects are placed in the “open” storage compartments in such a way that they may fall onto passengers during sudden turning, braking or in the event of an accident.

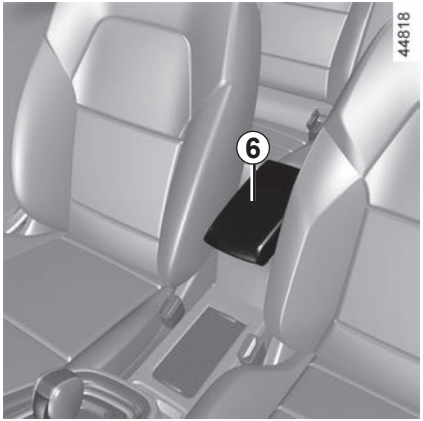

Centre armrest storage compartment *7*

Lift the central armrest cover ***6***.

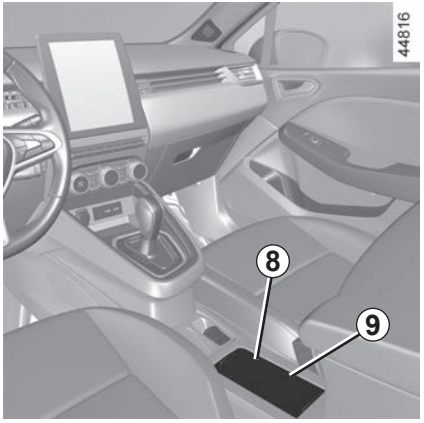

Cup holders *9*

Slide ***8*** to access the cup holder.

The cup holder is equipped with retaining hooks to keep the cup in place.

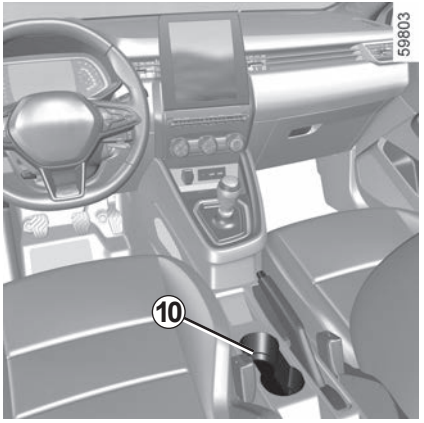

Cup holders *10*

This can be used to store a mobile ashtray, drink cans, etc.

When turning corners, accelerating or braking, ensure that the receptacle being held by the cup holder is not dislodged.

There is a risk of injury if hot liquid escapes.

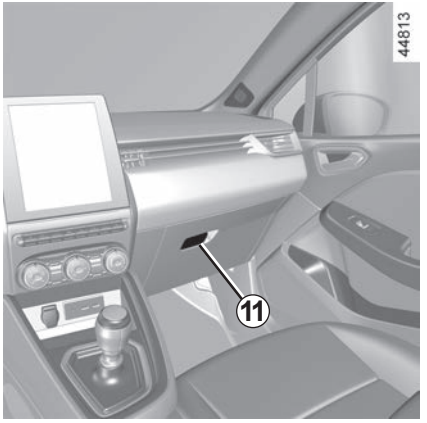

Passenger storage compartment

Pull handle ***11*** to open it.

The glove box can hold A4-sized documents, a bottle etc.

Ensure that no hard, heavy or pointed objects are placed in the “open” storage compartments in such a way that they may fall onto passengers during sudden turning, braking or in the event of an accident.

Rear door storage compartment *12*

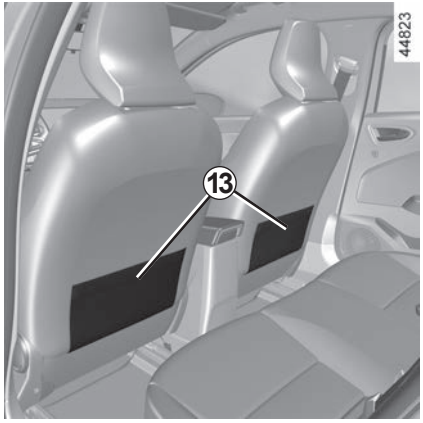

Rear seat storage pockets *13*

Grab handle *14*

This offers support and can be held when the vehicle is moving.

Do not use it for getting into or out of the vehicle.

Ensure that no hard, heavy or pointed objects are placed in the “open” storage compartments in such a way that they may fall onto passengers during sudden turning, braking or in the event of an accident.

ACCESSORIES SOCKET

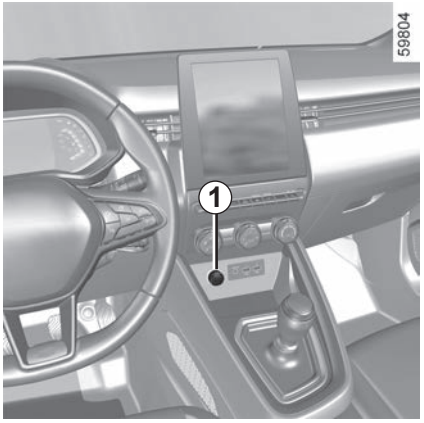

Accessories socket *1*

You can use the ***1*** socket.

It is provided for the purpose of connecting accessories approved by our Technical Department.

Connect accessories with a maximum power of 120 watts (12 V) only.

When several accessory sockets are used at the same time, the total power of the connected accessories must not exceed 180 watts.

Fire hazard.

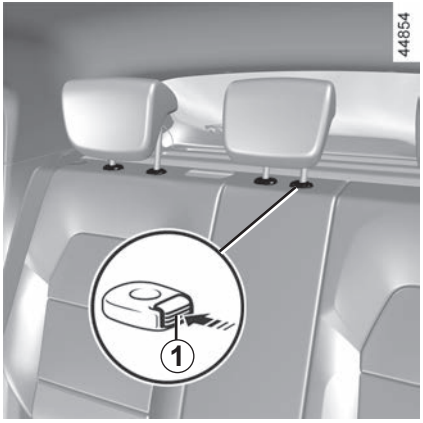

Position for use

Lift the headrest fully until it locks.

Check that the bonnet is correctly locked.

To remove the headrest

Raise the headrest as far as it will go, then press button ***1*** and remove the headrest.

To refit the headrest

Enter the rods in their housing and push down the headrest until it locks to use it in the high position.

Check that the bonnet is correctly locked.

Folding positions *2* for the headrest

Press the button ***1*** and lower the headrest completely.

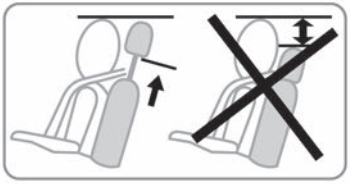

When the headrest is set at the lowest position, this is for storage only. It should not be in this position when a seat is occupied.

The headrest is a safety component; check that it is fitted and in the correct position.

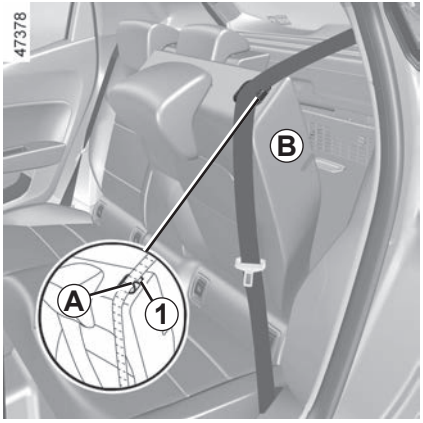

To fold down the seatback

Ensure that the front seats are far enough forward.

Lower the headrests fully.

Place the seat belts in their guides ***A***.

Press button ***1*** and lower the seatback ***B***.

Before moving the seatback, put the seat belt in belt guide ***A*** to avoid damaging it.

To replace the seatback, proceed in the reverse order to removal.

Refit the seatback and click it back into place.

When refitting the seatback, make sure it is correctly locked in place.
If seat covers are fitted, make sure these do not prevent the seatback latch from locking in.
Make sure that the seat belts are positioned correctly.
Reposition the headrests.

For safety reasons, carry out any adjustments when the vehicle is not being driven.

When moving the rear seats, ensure that nothing obstructs the anchorage points (passenger's arm or leg, a pet, gravel, cloth, toys, etc.).

To open

Press the ***1*** button to open the luggage compartment lid a few centimetres.

Lift the luggage compartment lid.

To close

Lower the boot lid using the handle inside the boot ***2*** to assist you.

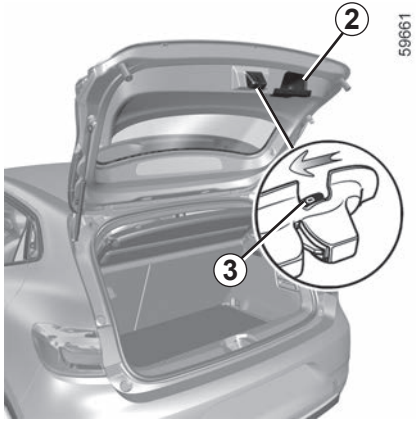

Opening the doors manually from the inside

If it is impossible to unlock the tailgate, it can be done manually from inside:

– access the luggage compartment by tilting the rear bench seatback(s),

– insert a pencil or similar object in recess ***3*** and slide the unit as shown in the illustration;

– push the tailgate to open it.

The attaching of any carrying device (bike rack, luggage box etc.) resting on the luggage compartment lid is prohibited.

To install a carrying device on your vehicle, contact an Approved Dealer.

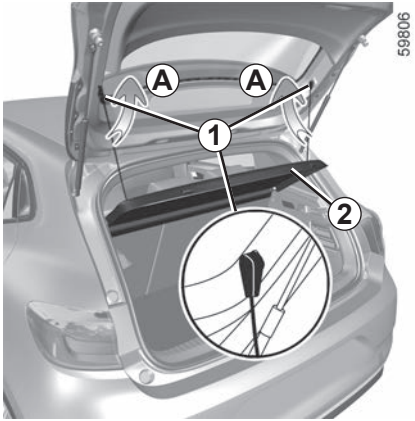

Removal

– Lift the clips ***1*** using movement ***A*** to detach the cords from the luggage compartment lid;

– lift the shelf ***2*** to unclip it (movement ***B***);

– pull the shelf towards you.

To refit, proceed in the reverse order to removal.

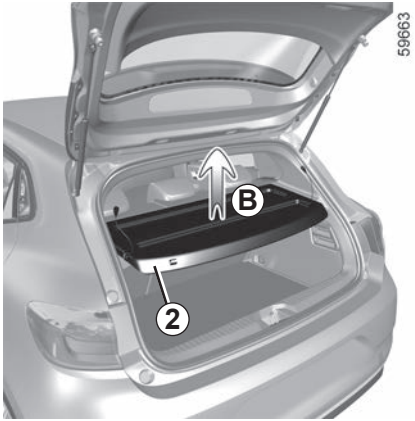

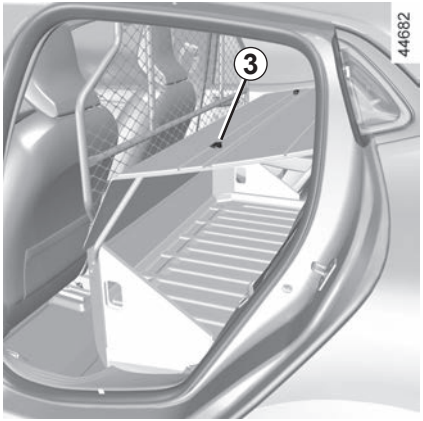

Utility version

Unclip mountings ***3*** on either side of the parcel shelf, then remove it via the boot.

To refit it, proceed in the reverse order to removal.

Do not place any heavy or hard object on the parcel shelf.

These may pose a risk to the vehicle occupants if the driver has to brake suddenly or if the vehicle is involved in an accident.

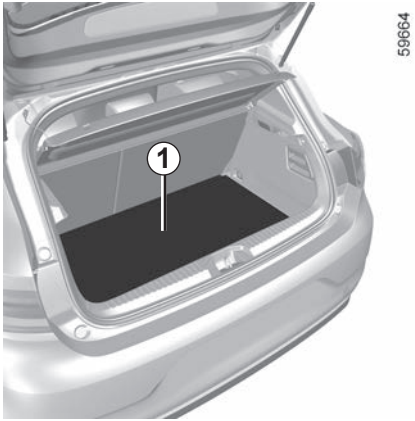

Mobile floor *1*

Flat position

Enables you to flatten the floor by folding down the back of the rear bench seat and to compartmentalise the boot into two distinct spaces.

The mobile floor is positioned on the runner ***2***.

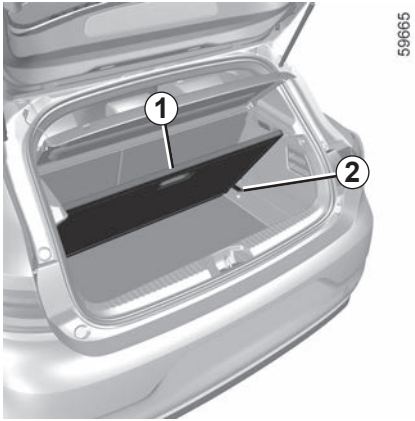

Intermediate position

In the blocked position, it allows you to access the tools stored under the boot carpet.

– Remove the mobile floor ***1***;

– place it in the luggage compartment, sliding it behind the runner ***2***.

Maximum weight for the mobile floor: 100 kg evenly distributed.

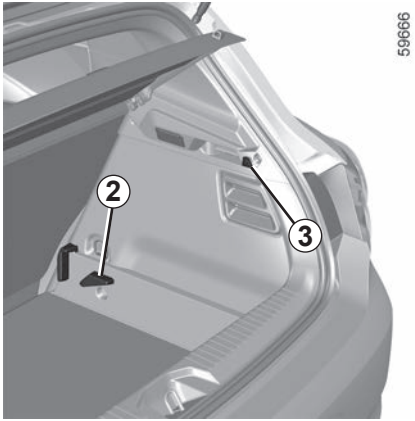

Storage position

This allows for more space to store things in the boot.

– Remove the mobile floor ***1***;

– place it in the luggage compartment under the runner ***2***.

Bag hooks *3*

Maximum weight per hook: 5 kg.

TRANSPORTING OBJECTS IN THE LUGGAGE COMPARTMENT

Always position the objects transported so that the largest surface is against:

– the rear bench seatback, for normal loading (example ***A***);

– the front seatbacks with the rear seatbacks folded down, as is the case for maximum loads (example ***B***).

Ensure that the objects being transported are evenly distributed throughout the loading area.

If you have to place objects on the folded seatback, it is necessary that you lower the headrests before folding the seatback so that it can be folded as flat as possible against the seat.

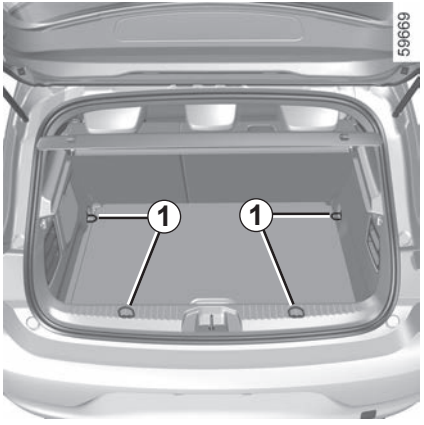

Always position the heaviest items directly on the floor.

Use the lashing points ***1*** on the boot floor, if these are fitted to the vehicle.

The luggage should be loaded in such a way that no items will be thrown forward and strike the occupants if the driver has to brake suddenly.

Fasten the rear seat belts, even if the seats are not occupied.

Permissible nose weight, maxi- - mum permissible towing weight braked and unbraked: ➥ 6.10.

Choice and fitting of towing equipment

Maximum weight of towing equipment:

– 10 kg on a vehicle with towing pre-equipment;

– 28 kg on a vehicle without towing pre-equipment.

It is not permitted to fit a mechanical towing device (ball, hook, etc.) that is removable without tools or retractable if it cannot be easily removed or repositioned when not in use.

For fitting and conditions of use, refer to the equipment's fitting instructions.

Please keep these instructions with the rest of the vehicle documentation.

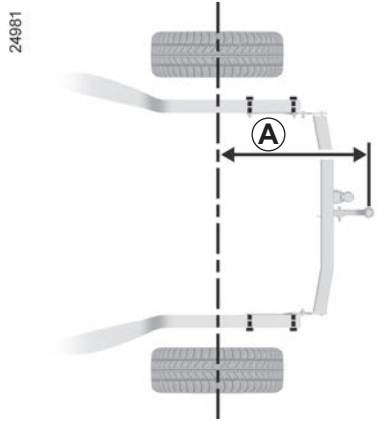

Maximum dimension ***A***: 762 mm.

Any towing device must not obstruct any lighting component or the number plate when not in use. Mechanical towing devices (ball, hook, etc.) which can be removed without tools or which are retractable must be removed or repositioned when they are not in use.

In all cases, you must comply with the regulations of the particular country you are in.

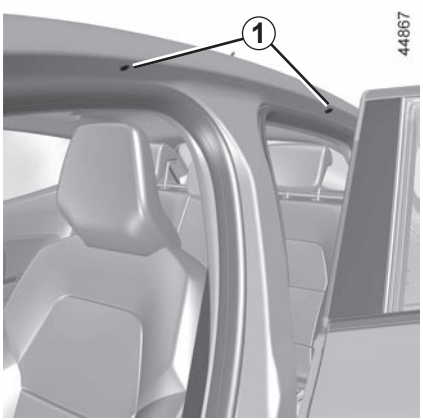

Accessing the mounting points

Open the doors to access the mounting points ***1***.

If original roof bars, approved by our Technical Department, are supplied with screws, only use these screws for attaching the roof bars to the vehicle.

Precautions during use

Handling the tailgate

Before handling the tailgate, check the objects and/or accessories (bike rack, roof box, etc.) fitted to the roof bars: these must be correctly positioned and secured, so as not to hinder the operation of the tailgate.

For information on the range of equipment adapted to your vehicle, we advise you to consult an approved Dealer.

Refer to the manufacturer's instructions for information on how to fit and use the roof rack bar.

Please keep these instructions with the rest of the vehicle documentation.

Maximum permissible load on roof rack ➥ 6.10.

Spoiler *A*

The attaching of any carrying device (bike rack, luggage box etc.) resting on the spoiler is prohibited.

To install a carrying device on your vehicle, contact an Approved Dealer.

Section 4: Maintenance

Bonnet 4.2
Engine oil level: general information 4.4
Engine oil level: topping up, filling 4.5
Oil change 4.6
Levels 4.8
engine coolant 4.8
brake fluid. 4.10
windscreen washer reservoir 4.11
Filters. 4.11
Tyre pressure. 4.12
Battery 4.14
Bodywork maintenance 4.17
Interior trim maintenance. 4.20

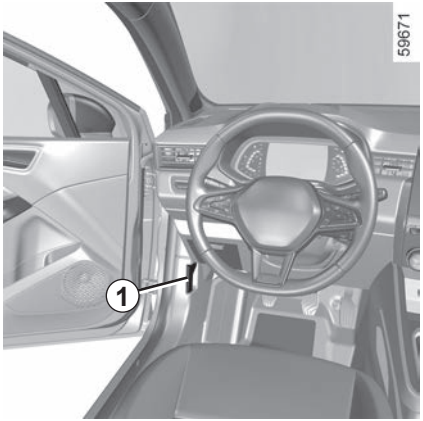

To open the bonnet, open a door and pull the ***1*** handle, located on the left-hand side of the dashboard.

Before carrying out any action in the engine compartment, you must switch off the ignition. ➥ 2.4 ➥ 2.7.

Do not press down on the bonnet: there is a risk that the bonnet may accidentally close.

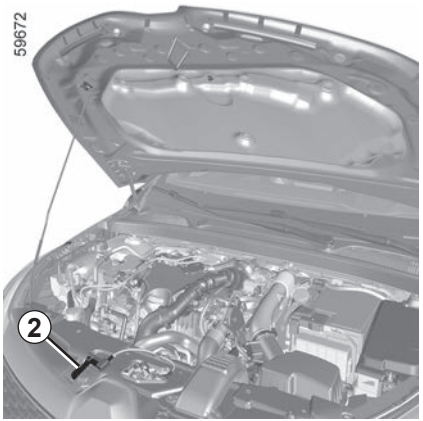

Unlocking the bonnet catch

To unlock, push tab ***2*** at the same time as opening the bonnet.

Please note when working close to the engine that it may be hot.

The engine cooling fan may also start at any moment. The label in the engine compartment reminds you of this.

Risk of injury.

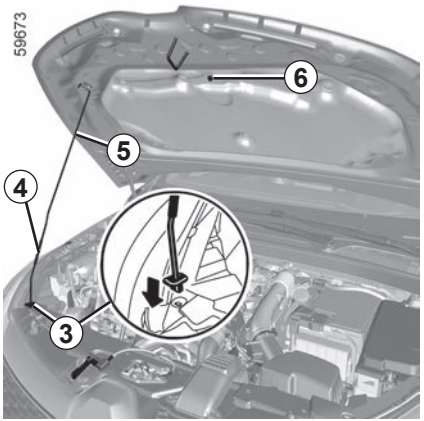

Opening the bonnet

Lift the bonnet and release stay ***5*** from its holder ***6*** using the handle ***4***. For your own safety, it is **very important** to fix the stay into the retainer ***3*** in the bonnet.

When working in the engine compartment, ensure that the windscreen wiper stalk is in the park position.

Risk of injury.

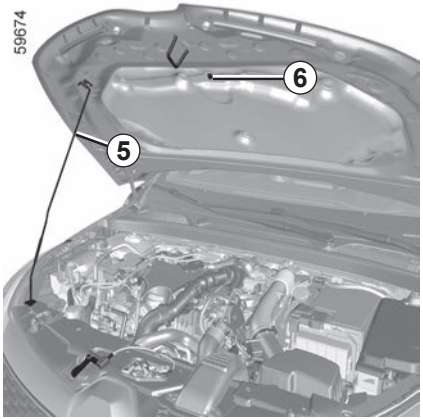

Closing the bonnet

Before closing the bonnet, make sure that nothing has been left in the engine compartment.

To close the bonnet, replace the stay ***5*** in its holder ***6***.

Hold the middle of the bonnet and guide it down to one foot (30 cm) above the closed position, then release.

It will latch automatically under its own weight.

Ensure that the bonnet is properly locked.

Check that nothing is preventing the catch from locking (gravel, cloth, etc.).

After any procedure in the engine compartment, make sure that you do not forget anything (cloth, tools, etc.).

These may damage the engine or cause a fire.

In the event of even a slight impact involving the radiator grille or bonnet, have the bonnet lock checked by an approved dealer as soon as possible.

ENGINE OIL LEVEL: general information

It is normal for an engine to use oil for lubrication and cooling of moving parts and it is normal to top up the level between oil changes.

However, contact your approved Dealer if more than 0.5 litres is being consumed every 600 miles (1,000 km) after the running in period.

Oil change frequency: check the oil level from time to time and certainly before any long journey to avoid the risk of damaging your engine.

Reading the oil level

The oil level should be read with the vehicle on level ground, after the engine has been switched off for some time.

The dipstick must be used to read the exact oil level and make sure that the maximum level has not been exceeded (risk of engine damage).

Depending on the vehicle, the instrument panel display only alerts the driver when the oil level is at its minimum.

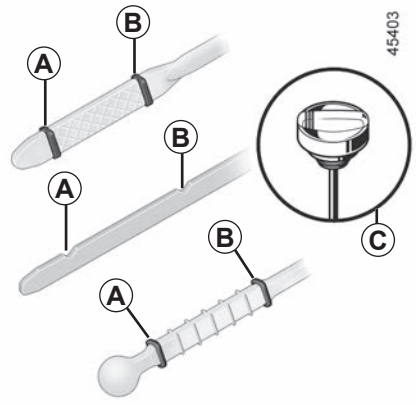

– Remove the dipstick and wipe with a clean, lint-free cloth;

– push the dipstick in as far as it will go (for vehicles equipped with a “captype dipstick” ***C***, screw the cap in as far as it will go);

– take out the dipstick again;

– read the level: it should never fall below the “**MINI**” mark ***A*** and never exceed the “**MAXI**” ***B*** mark.

Once the operation has been completed, ensure that the dipstick is pushed in as far as it will go or that the “cap-type dipstick” is completely screwed in.

Adding engine oil

Use a funnel or protect the filling neck area to avoid engine oil escaping onto a hot part of the engine compartment or a sensitive part (e.g. electrical components).
Fire hazard.

Exceeding the maximum engine oil level

Under no circumstances should maximum filling level ***B*** be exceeded: this could damage the engine and the anti-pollution system.

If the level exceeds the maximum level, **do not start your vehicle** and contact an authorised dealer.

Before carrying out any action in the engine compartment, you must switch off the ignition. ➥ 2.4 or ➥ 2.7.

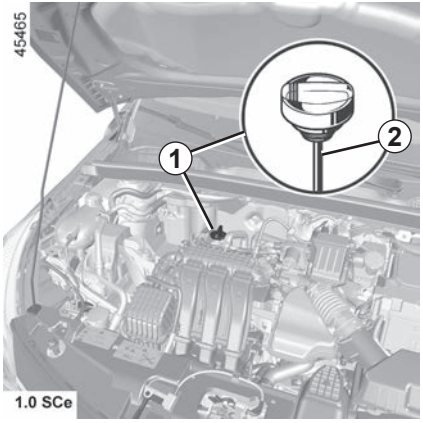

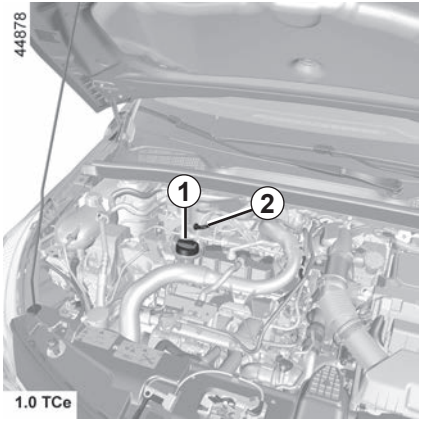

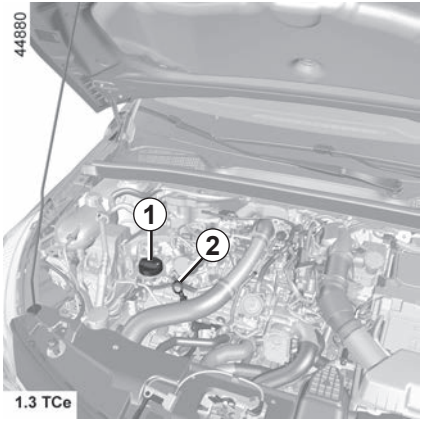

Topping up/filling

The vehicle must be parked on level ground and the engine should be cold (for instance, before the engine is started up for the first time in the day).

Before carrying out any action in the engine compartment, you must switch off the ignition. ➥ 2.4 or ➥ 2.7.

Do not exceed the **"MAXI"** level and do not forget to refit the cap ***1*** and the dipstick ***2***.

– Unscrew cap ***1***;

– top up the level (capacity between "**MINI**" and "**MAXI**" of the gauge ***2*** and between 0.9 to 2 litres according to the engine);

– wait for approximately 20 minutes to allow the oil to flow into the engine;

– check the level using the dipstick ***2*** (as described above).

Once the operation has been completed, ensure that the dipstick is pushed in as far as it will go or that the cap-type dipstick is completely screwed in.

Filling-up engine oil

Use a funnel or protect the filling neck area to avoid engine oil escaping onto a hot part of the engine compartment or a sensitive part (e.g. electrical components).

Fire hazard.

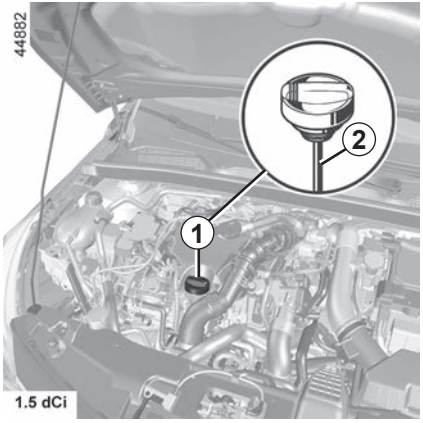

Oil change

Service interval: refer to the maintenance document for your vehicle.

Oil change capacity

Please refer to the maintenance document for your vehicle, or contact an authorised dealer.

Always check the engine oil level using the dipstick, as explained previously (it should never fall below the minimum level, or be over the maximum level on the dipstick).

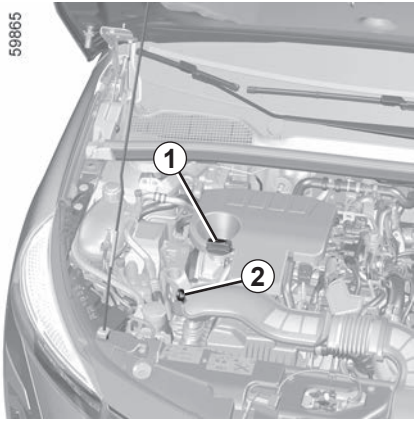

Engine oil grade

Refer to the maintenance document for your vehicle.

Consult your approved dealer at once if you notice an abnormal or repeated drop in any of the fluid levels.

Engine oil change: if you are changing the oil when the engine is hot, be careful not to scald yourself if the oil overflows.

Filling and/or checking the oil level: when topping up or checking the oil level, ensure that no oil leaks onto the engine components.

Do not forget to properly close the cap and refit the dipstick to prevent any oil spatter on hot engine components.

Fire hazard.

Exceeding the maximum engine oil level

Under no circumstances should the maximum filling level be exceeded: this could damage the engine and the emission control system.

If the level exceeds the maximum level, **do not start your vehicle** and contact an authorised dealer.

When working in the engine compartment, ensure that the windscreen wiper stalk is in the park position.

Risk of injury.

Please note when working close to the engine that it may be hot.

The engine cooling fan may also start at any moment.

The label in the engine compartment reminds you of this.

Risk of injury.

Never run the engine in an enclosed space as exhaust gases are poisonous.

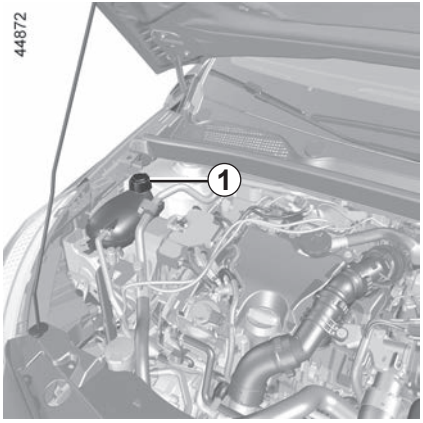

Combustion engine coolant

With the ignition off and the vehicle on flat ground, the level **when cold** must be between the "**MINI**" and "**MAXI**" marks indicated on the coolant reservoir ***1***.

Top this level up **when cold** before it reaches the "**MINI**" mark.

Frequency of checking coolant level

Check the coolant level regularly (very severe damage is likely to be caused to the combustion engine if it runs out of coolant).

If the level needs to be topped up, only use products approved by our Technical Department which ensure:

– protection against freezing;

– an anti-corrosion protection for the cooling system.

Before carrying out any action in the engine compartment, you must switch off the ignition. ➥ 2.4 or ➥ 2.7.

Replacement interval

Refer to the Maintenance Document for your vehicle.

Consult your approved dealer at once if you notice an abnormal or repeated drop in any of the fluid levels.

When working in the engine compartment, ensure that the windscreen wiper stalk is in the park position.

Risk of injury.

No operations should be carried out on the cooling circuit when the combustion engine is hot.

Risk of burns.

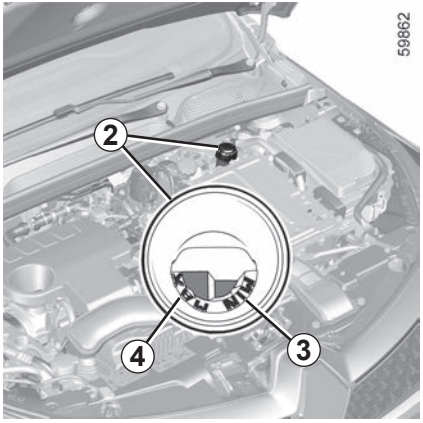

Electric traction system coolant

This system is different to that of the combustion engine.

It is used for cooling the electric motor.

Reading the level

With the ignition off and the vehicle parked on level ground, unscrew the cap from the coolant reservoir **2**.

When **cold**, the level should be located between the "**MIN**" ***3*** and "**MAX**" ***4*** markings inside the funnel.

Frequency of checking coolant level

Check the coolant level regularly (very severe damage is likely to be caused to the electrical circuit if it runs out of coolant).

If a top-up is required, you must contact an approved dealer to perform the top-up.

> Before carrying out any action in the engine compartment, you must switch off the ignition ➥ 2.4 or ➥ 2.7.

Replacement interval

Refer to the Maintenance Document for your vehicle.

> Consult your approved dealer at once if you notice an abnormal or repeated drop in any of the fluid levels.

> When working in the engine compartment, ensure that the windscreen wiper stalk is in the park position.
>
> **Risk of injury.**

> No operations should be carried out on the cooling circuit when the combustion engine is hot.
>
> **Risk of burns.**

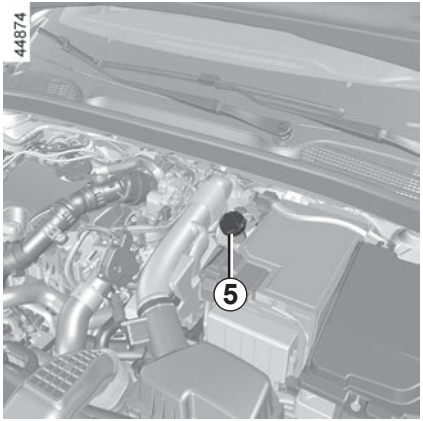

Brake fluid

This should be checked frequently, and immediately if you notice even the slightest loss in braking efficiency.

The level is checked while the vehicle is on flat ground and the ignition is off.

Level *5*

It is normal for the level to drop as the brake shoes become worn, but it must never drop lower than the "**MINI**" warning line.

If you wish to check the disc and drum wear yourself, you should obtain the document explaining the checking procedure from the manufacturer's network or web site.

Topping up

After any operation on the hydraulic circuit, a specialist must replace the brake fluid.

Only use fluids approved by our Technical Department (and taken from a sealed container).

Replacement interval

Refer to the Maintenance Document for your vehicle.

Consult your approved dealer at once if you notice an abnormal or repeated drop in any of the fluid levels.

Before carrying out any action in the engine compartment, you must switch off the ignition ➥ 2.4 or ➥ 2.7.

When working in the engine compartment, ensure that the windscreen wiper stalk is in the park position.

Risk of injury.

When working close to the combustion engine, be aware that it may be hot.

The engine cooling fan may also start at any moment.

The label in the engine compartment reminds you of this.

Risk of injury.

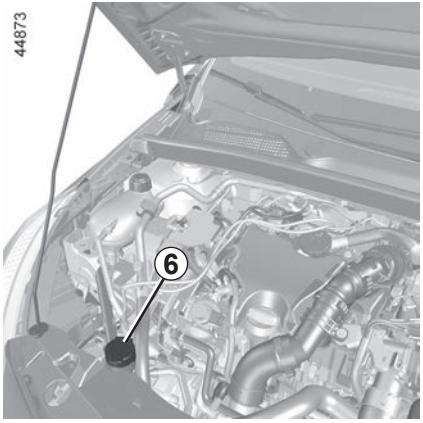

Windscreen washer reservoir

Topping up

With the ignition switched off, open the cap ***6***.

Fill until you can see the fluid, then replace the cap.

Note: check the reservoir level regularly and top up the liquid before taking a trip.

Liquid

Windscreen washer fluid.

In winter, use anti-freeze product.

Use products recommended by an authorised dealer.

Note: do not use pure water (risk of damage to the priming pump, limescale building up on the pump and the jets).

Jets

To adjust the height of the windscreen washer jets, please consult an authorised dealer.

Before carrying out any action in the engine compartment, you must switch off the ignition. ➥ 2.4 or ➥ 2.7.

Filters

The replacement of filter components (air filter, cabin filter, diesel filter, etc.) is scheduled in the maintenance operations for your vehicle.

Replacement intervals for filter elements: refer to the Maintenance Document for your vehicle.

When working in the engine compartment, ensure that the windscreen wiper stalk is in the park position.

Risk of injury.

When working close to the combustion engine, be aware that it may be hot.

The engine cooling fan may also start at any moment.

The label in the engine compartment reminds you of this.

Risk of injury.

Label *A*

Open the driver's door to read it.

Tyre pressures should be checked when the tyres are cold.

If the tyre pressures cannot be checked when the tyres are **cold**, increase the pressures from **0.2** to **0.3** bar (or **3 PSI**). **Never deflate a hot tyre.**

Vehicle fitted with a tyre pressure loss warning system

In the event of under-inflation (punctures, under-inflation etc.), the warning light appears on the instrument panel. ➥ 2.40.

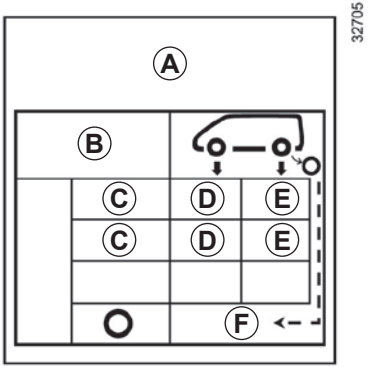

B: dimension of the tyres fitted to the vehicle.

C: intended driving speed.

D: front tyre pressure.

E: rear tyre pressure.

F: tyre pressure for the emergency spare wheel.

Vehicles used fully laden (Maximum Permissible All-up Weight) and towing a trailer

The maximum speed must be limited to **62 mph (100 km/h)** and the tyre pressure increased by **0.2 bar (3 psi)** ➥ 6.10.

Risk of tyre blowouts.

Tyre safety and chain fitting: for information on servicing conditions and, depending on the vehicle version, the use of chains. ➥ 5.13.

For your safety, please respect the speed limit.

When they need to be replaced, only tyres of the same make, size, type and profile should be used on a single axle.

They must: either have a load capacity and speed rating at least equal to those of the original tyres, or conform to those recommended by an authorised dealer.

Failure to heed these instructions could endanger your safety and affect your vehicle's roadworthiness.

Risk of loss of control of the vehicle.

BATTERY (1/3)

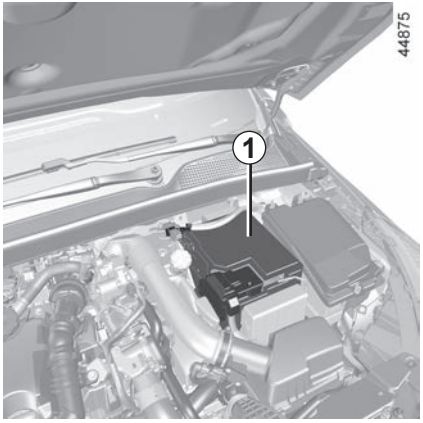

Battery ***1*** does not require any maintenance. **You should not open it or add any fluid.**

Handle the battery with care as it contains sulphuric acid which must not come into contact with the eyes or skin. If it does, wash the affected area with plenty of cold water. If necessary, consult a doctor.

Ensure that naked flames, red hot objects and sparks do not come into contact with the battery as there is a risk of explosion.

Depending on the vehicle, a system continuously checks the battery charge status. If this decreases, the “Battery Now In Standby Mode” message appears on the instrument panel followed by “Battery Low Start Engine”. In this case, start the engine and the message on the instrument panel will disappear.

Note: the message “Battery Now In Standby Mode” may be displayed after 5 to 30 minutes of vehicle use with the engine stopped to warn the user that power consuming functions (interior lighting, radio, navigation, ventilation, accessories power supply, etc.) may be automatically cut off.

The charge status of your battery can decrease especially if you use your vehicle:
– for short journeys;
– for driving in town;
– when the temperature drops;
– after extended use of energy-consuming devices (radio, etc.) with the engine switched off.

Before carrying out any action in the engine compartment, you must switch off the ignition. ➥ 2.4 ➥ 2.7.

Please note when working close to the engine that it may be hot. In addition, the engine cooling fan may start at any moment. The warning light in the engine compartment reminds you of this.

Risk of injury.

Special case of the E-Tech hybrid version

The secondary “12 V” battery ***2***, located in the luggage compartment of the E-Tech hybrid vehicle, supplies the energy required to open/close the vehicle and to operate the equipment.

You should not open it or add any fluid.

The charge status of the secondary “12 V” battery ***1*** may decrease, especially if you use your vehicle:
– when the outside temperature drops;
– after extended use of energy-consuming functions while the ignition is switched off;
– after a prolonged period of parking.

Do not disconnect the secondary “12 V” battery.

Risk of serious burns or electric shocks.

For your own safety and to ensure the proper operation of the vehicle’s electrical equipment (lights, windscreen wipers, ABS etc.), any intervention on the secondary “12 V” battery (removal, disconnection etc.) must **ALWAYS** be performed by a specialist professional.
Risk of serious burns or electric shocks.
Respect **categorically** the replacement intervals (without exceeding them) as stated in the maintenance document.
The battery is a specific type. Please ensure it is replaced with the same type.
Call an approved Dealer.

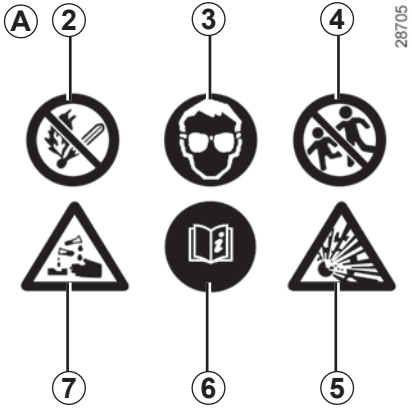

Label *A*

Observe the indications on the battery:

- ***2*** naked flames and smoking are forbidden;
- ***3*** eye protection required;
- ***4*** keep away from children;
- ***5*** explosive materials;
- ***6*** refer to the handbook;
- ***7*** corrosive materials.

For your own safety and for the proper operation of the vehicle's electrical equipment (lights, windscreen wipers, braking assistance, etc.), any operation carried out on the battery (removal, disconnection, etc.) must **categorically** be performed by a specialist professional.

Risk of serious burns or electric shocks.

You **must** respect the replacement intervals (without exceeding them) as stated in the maintenance document.

The battery is a specific type. Please ensure it is replaced with the same type.

Call an approved Dealer.

The battery is a **specific type**, please ensure it is replaced with the same type.

Consult an approved dealer.

A well-maintained vehicle will last longer.

It is therefore recommended to maintain the exterior of the vehicle regularly.

Your vehicle has been treated with very effective anti-corrosion products. It is nevertheless subject to various outside influences.

Corrosive agents in the atmosphere

– Atmospheric pollution (in built-up and industrial areas);
– saline atmospheres (near the sea, particularly in hot weather);
– seasonal and damp weather conditions (e.g. road salt in winter, water from road cleaners, etc.).

Minor impacts

Abrasive action

Dust and sand in the air, mud, road grit thrown up by other vehicles, etc.

You should take a number of minor precautions in order to safeguard your vehicle against such risks.

You should

Wash your car frequently, **with the engine off**, with cleaning products recommended by the manufacturer (never use abrasive products).

Rinse thoroughly beforehand with a jet:

– spots of tree resin and industrial grime;
– mud in the wheel arches and underneath the body which forms damp patches;
– **bird droppings**, which cause a chemical reaction with the paint that **rapidly discolours paintwork and may even cause the paint to peel off;**
wash the vehicle **immediately** to remove these marks since it is impossible to remove them by polishing;
– salt, particularly in the wheel arches and underneath the body after driving in areas where the roads have been gritted.

Remove any plant matter (resin, leaves, etc.) from the vehicle regularly.

Respect local regulations about washing vehicles (e.g. do not wash your vehicle on a public highway).

Observe the vehicle stopping distances when driving on gravelled surfaces to prevent paint damage.

Repair, or have repaired quickly, areas where the paint has been damaged, to prevent corrosion spreading.

Remember to visit the body shop periodically in order to maintain your anti-corrosion warranty.

Refer to the maintenance document.

If it is necessary to clean mechanical components, hinges, etc., spray them with products approved by our Technical Department to protect them after they have been cleaned.

We have selected special products to care for your vehicle and you can obtain these from the manufacturer’s accessory outlets.

What you should not do

Wash the vehicle in bright sunlight or freezing temperatures.

Do not scrape off mud or dirt without pre-wetting.

Allow dirt to accumulate on the exterior.

Allow rust to form following minor impacts.

Do not use solvents not approved by our Technical Department to remove stains as this could damage the paintwork.

Do not drive in snow or muddy conditions without washing the vehicle, particularly under the wheel arches and body.

Degrease or clean using high-pressure cleaning equipment or by spraying on products not approved by our Technical Department:

– mechanical components (e.g.: engine compartment);
– the wheels (e.g. braking system components such as brake callipers);
– underbody;
– parts with hinges (e.g.: inside the doors);
– painted plastic external fittings (e.g.: bumpers).

Doing this could give rise to corrosion or operational faults.

Vehicles with a matte paint finish

This type of paint requires certain precautions.

You should do the following

Wash the vehicle by hand using plenty of water, using a soft cloth or a gentle sponge.

Do not do the following

Use wax-based products (polishing).

Rub too hard.

Wash the vehicle in a roller-type car wash.

Attach stickers to the paintwork (risk of leaving marks).

Wash the vehicle using a high-pressure cleaning device.

Using a roller type car wash

Return the wiper stalk to the park position ➥ 1.120.

Check the mounting of external accessories, additional lights and rear view mirrors, and ensure that the wiper blades are secured with adhesive tape.

Remove the radio aerial mast if your vehicle is fitted with this equipment.

Remember to remove the tape and refit the antenna after washing.

Cleaning the headlights, sensors and cameras

Use a soft cloth or cotton wool.

If this does not clean them properly, moisten the cloth with soapy water, then wipe clean with a soft damp cloth or cotton wool.

Finally, carefully dry off with a soft dry cloth.

Do not use cleaning products containing alcohol or utensils (e.g.: a scraper).

Cleaning stickers, decorative films, etc.

You should do the following

Use a soft cloth or cotton wool.

Moisten it slightly with soapy water then always wipe clean with a soft cloth or cotton wool.

Finally, carefully dry off with a soft dry cloth.

Do not do the following

Use alcohol-based cleaning products.

Use utensils (e.g.: scraper).

Rub too hard.

Wash the area using a high-pressure cleaning device.

INTERIOR TRIM MAINTENANCE (1/2)

A well-maintained vehicle will last longer. It is therefore recommended to maintain the interior of the vehicle regularly.

A stain should always be dealt with swiftly.

Whatever type of stain is on the trim, use **cold** (or warm) **soapy water with natural soap**.

Detergents (washing-up liquid, powdered products, alcohol-based products) should not be used.

Use a soft cloth.

Rinse and soak up the excess.

Multimedia screen

Maintenance of the screen may depend on the type of multimedia equipment. Please refer to the multimedia instructions for further information.

Glass instrument panel

(e.g. instrument panel, clock, exterior temperature display etc.)

Use a soft cloth (or cotton wool).
If this does not clean them properly, use a soft cloth (or cotton wool) slightly moistened with soapy water and then wipe clean with another soft damp cloth or cotton wool.
Finally, **carefully** dry off with a soft dry cloth.

Do not use products containing alcohol and/or spray fluids on the area.

Seat belts

These must be kept clean.
Use products selected by our Technical Department (approved outlets) or warm, soapy water and a sponge and wipe with a dry cloth.
Detergents or dyes must not be used under any circumstances.

Textiles (seats, door trim, etc)

Vacuum-clean the textiles **regularly**.

Liquid stain

Use soapy water.

Dab lightly (never rub) with a soft cloth, rinse and remove the excess.

Solid or pasty stain

Carefully remove the excess solid or pasty material **immediately** with a spatula (working from the edges to the centre to avoid spreading the stain).
Clean as for a liquid stain.

Special instructions for sweets or chewing gum

Put an ice cube on the stain to solidify it, then proceed as for a solid stain.

For further recommendations for maintaining the interior, and/or for any unsatisfactory results, please see an authorised dealer.

Removal/replacing removable equipment originally fitted in the vehicle

If you need to remove equipment in order to clean the passenger compartment (for example, mats), always ensure that they are correctly refitted and are the right way around (the driver's mat should be fitted on the driver's side, etc.) and fit them with the components supplied with the equipment (for example, the driver mat should always be fixed using the pre-fitted mounting components).

With the vehicle stationary, always ensure that nothing will impede driving (anything obstructing the pedals, heel wedged by the mat etc.).

You should not:

Position objects such as deodorants, scents etc. near air vents as this could damage your dashboard trim.

Use high-pressure cleaning equipment or sprays inside the passenger compartment:

without careful use, this equipment could impair the correct functioning of the electrical or electronic components in the vehicle, or have other detrimental effects.

Section 5: Practical Advice

Puncture, emergency spare wheel 5.2
Tyre inflation kit 5.6
Tools 5.9
Wheel trim, wheel 5.10
Changing a wheel 5.11
Tyres (tyre and wheel safety, use in winter) 5.13
Headlights (changing bulbs) 5.16
Rear lights and side lights (replacing bulbs) 5.17
Indicator lights (changing bulbs) 5.19
Interior lighting (changing bulbs) 5.21
Remote control key: battery. 5.23
Card: battery 5.25
Battery 5.27
Fitting a radio. 5.32
Installation and use of accessories: important recommendations 5.33
Fuses. 5.34
Wiper blades: replacement 5.38
Towing 5.40
Operating faults 5.42

In case of puncture

Depending on the vehicle, the following may be available:

– a tyre inflation kit ➥ 5.6 ;

– an emergency spare wheel or self-repairing tyres (refer to the information on the following pages).

Vehicle fitted with a tyre pressure loss warning system

In the event of under-inflation (punctures, under-inflation etc.), the warning light appears on the instrument panel. ➥ 2.40.

If the emergency spare wheel has been stored for several years, have it checked by your Dealer to ensure that it is safe to use.

Vehicle fitted with an emergency spare wheel that differs from the other wheels:

– Never fit more than one emergency spare wheel to the same vehicle.

– Replace the emergency spare wheel as soon as possible with a wheel identical to the original one.

– When this is fitted to the vehicle, which must only be a temporary measure, the driving speed must not exceed the speed indicated on the label on the wheel.

– Fitting an emergency spare wheel may alter the way the vehicle usually runs. Avoid sudden acceleration or deceleration and reduce your speed when cornering.

– If you need to use snow chains, fit the emergency spare wheel to the rear axle and check the tyre pressure.

If the vehicle is parked on the hard shoulder, you must warn other road users of your vehicle's presence with a warning triangle or with other devices as per the legislation applying to the country you are in.

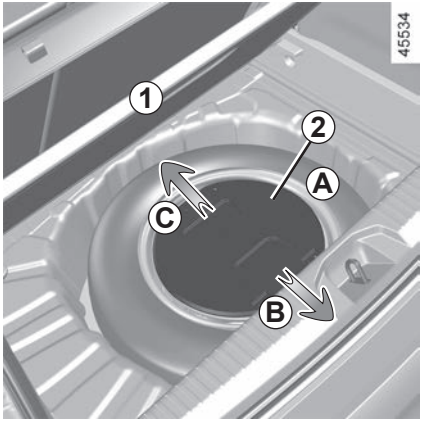

Combustion engine vehicles

Emergency spare wheel A

To get to it:

– open the boot;

– depending on the vehicle, lift up the movable floor and the luggage compartment mat ***1***;

– depending on the vehicle, remove the cover ***2*** from the tool kit ***4*** by sliding it (movement ***B*** or ***C***);

– unscrew the central mounting ***3*** (located, depending on the vehicle, under the jack) anti-clockwise;

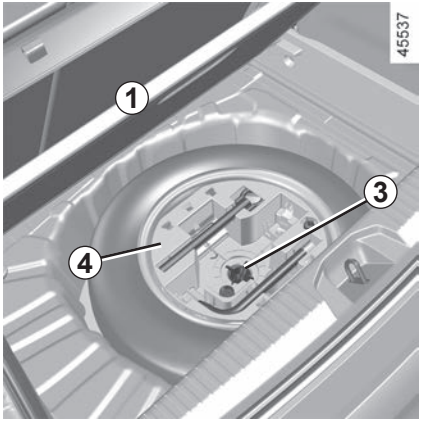

– remove the tool kit ***4***;

– remove the emergency spare wheel (***A*** or ***D***, depending on the vehicle).

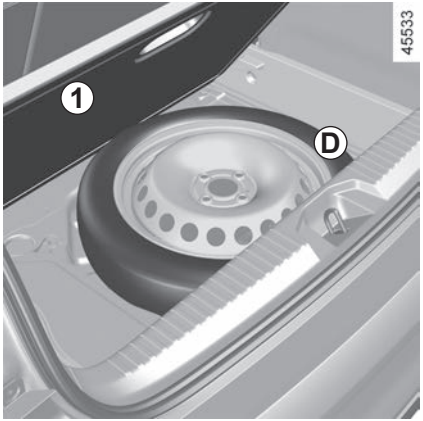

On vehicles equipped with emergency spare wheel ***D***, the punctured wheel may not be stored in place of the emergency spare wheel ***D***.

The ***4*** tool kit must be attached using the central attachment ***3*** and the punctured tyre must be placed in the luggage compartment.

E-Tech hybrid version

Tool kit *E*

The tools included in the tool kit depend on the vehicle.

Tool kit ***E*** is located in the tray under the luggage compartment carpet.

For more information ➥ 5.9.

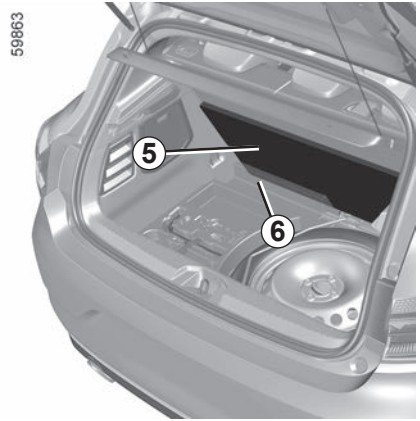

Emergency spare wheel *F*

To get to it:

– open the boot;

– lift the luggage compartment carpet ***5*** and fold it down between the rear bench seat and the storage compartment ***6***;

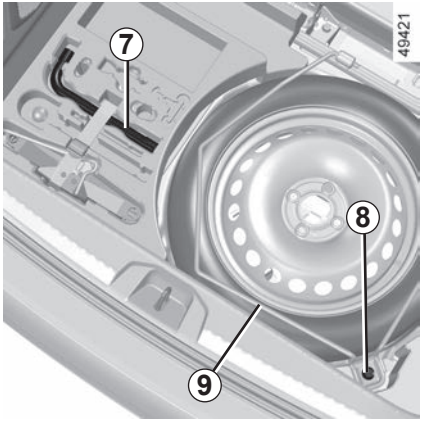

– loosen the nut ***8*** using an Allen key ***7*** in order to release the wheel carrier ***9***;

If the vehicle is parked on the hard shoulder, you must warn other road users of your vehicle's presence with a warning triangle or with other devices as per the legislation applying to the country you are in.

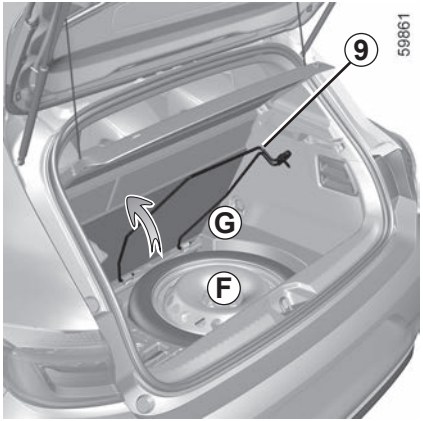

– lift the wheel carrier ***9*** to the vertical position (movement ***G***) beyond the point of resistance to lock it in place;

– remove the emergency spare wheel ***B***;

Note: the punctured wheel must not be placed in the emergency spare wheel carrier ***B***.

– keep the wheel carrier ***9*** in the vertical position;

– place the punctured wheel in the luggage compartment (position ***H***).

TYRE PRESSURE KIT (1/3)

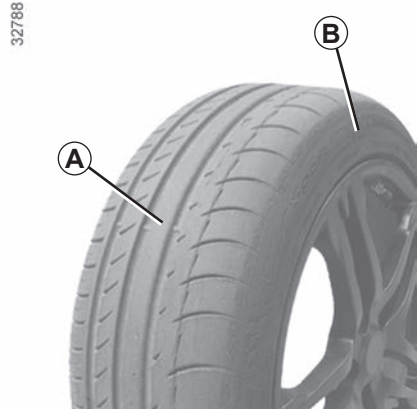

The kit repairs tyres when tread ***A*** has been damaged by objects smaller than 4 mm. It cannot repair all types of puncture, such as cuts larger than 4 mm, or cuts in tyre sidewall ***B***.

Ensure also that the wheel rim is in good condition.

Do not pull out the foreign body causing the puncture if it is still in the tyre.

Do not attempt to use the inflation kit if the tyre has been damaged as a result of driving with a puncture.

You should therefore carefully check the condition of the tyre sidewalls before any operation.

Driving with underinflated, flat or punctured tyres can be dangerous and may make the tyre impossible to repair.

This repair is temporary.

A tyre which has been punctured should always be inspected (and repaired, where possible) as soon as possible by a specialist.

When taking a tyre which has been repaired using this kit to be replaced, you must inform the specialist.

When driving, vibration may be felt due to the presence of the repair product injected into the tyre.

The kit is only approved for inflating the tyres of the vehicle originally equipped with the kit.

It must never be used to inflate the tyres of another vehicle, or any other inflatable object (rubber ring, rubber boat, etc.).

Avoid spillage on skin when handling the repair product bottle. If droplets do leak out, rinse them off with plenty of water.

Keep the repair kit away from children.

Do not dispose of the empty bottle in the countryside. Return it to your approved dealer or to a recycling organisation.

The bottle has a limited service life which is indicated on its label. Check the expiry date.

Contact an approved dealer to replace the inflation tube and repair product bottle.

35749

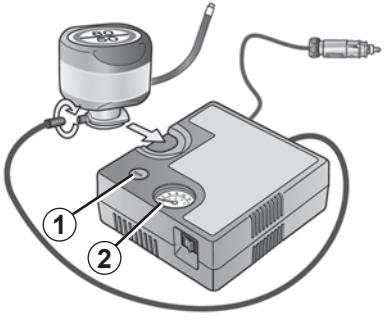

In the event of a puncture use the kit located, depending on the vehicle, in the cradle under the luggage compartment carpet or in the rear left-hand door storage compartment.

Vehicle fitted with a tyre pressure loss warning system

In the event of under-inflation (punctures, under-inflation etc.), the warning light appears on the instrument panel. ➥ 2.40.

With the engine running and the parking brake applied,

– Disconnect any accessories previously connected to the vehicle's accessories sockets;

– **refer to the information on the inflation kit compressor** located in the luggage compartment of the vehicle and follow the instructions;

– inflate the tyre to the recommended pressure ➥ 4.12 ;

– after a maximum of **15** minutes, stop inflating and read the pressure (on pressure gauge ***2***).

Note: while the bottle is emptying (approximately 30 seconds), the pressure gauge ***2*** will briefly indicate a pressure value up to **6** bar before the pressure drops;

– Adjust the pressure: to increase it, continue inflation with the kit. To reduce it, press the button ***1***.

If a minimum pressure of 1.8 bar is not reached after 15 minutes, repair is not possible; do not drive the vehicle but contact an approved dealer.

Before using this kit, park the vehicle at a sufficient distance from traffic, switch on the hazard warning lights, apply the handbrake, ask all passengers to leave the vehicle and keep them away from traffic.

If the vehicle is parked on the hard shoulder, you must warn other road users of your vehicle's presence with a warning triangle or with other devices as per the legislation applying to the country you are in.

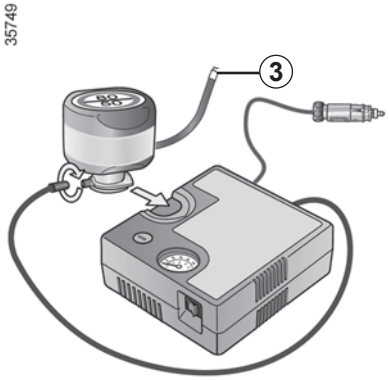

Once the tyre is correctly inflated, remove the kit: unscrew the inflation adapter slowly from the container ***3*** to prevent any product spatter and store the container in plastic packaging to prevent product leaks.

– Affix the driving recommendation label (located under the container) to the dashboard where the driver can see it.

– At the end of this initial inflation operation, air will still escape from the tyre. You must drive a short distance in order to seal the hole.

– Put the kit away.

– Start immediately and drive at a speed between 12 to 37 mph (20 to 60 km/h) in order to distribute the product evenly in the tyre; after driving a distance of 2 miles (3 km), stop and check the pressure.

– If the pressure is higher than 1.3 bar but lower than the recommended pressure (refer to the label affixed to the edge of the driver's door), adjust it. Otherwise, contact an approved dealer: the tyre cannot be repaired.

Precautions when using the kit

The kit should not be operated for more than 15 consecutive minutes.

Nothing should be placed around the driver's feet as such objects may slide under the pedals during sudden braking manoeuvres and obstruct their use.

The container must be replaced after the first use even if liquid remains inside.

Please be aware that a poorly tightened or missing valve cap can make the tyres less airtight and may lead to pressure loss.
Always use valve caps identical to those fitted originally and tighten them fully.

Following repair with the kit, do not travel further than 124 miles (200 km).

In addition, reduce your speed and under no circumstances exceed 50 mph (80 km/h).

The sticker, which you must affix in a prominent position on the dashboard, reminds you of this.

Depending on the country or local legislation, a tyre repaired with the inflation kit may need to be replaced.

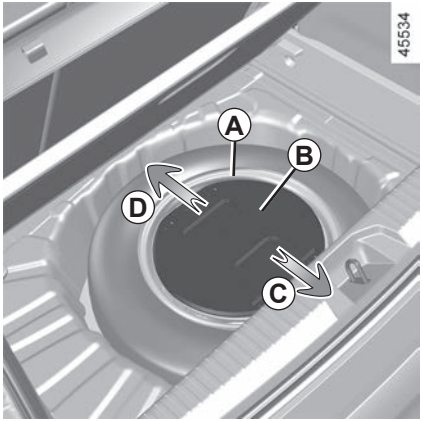

The tools included in the tool kit depend on the vehicle.
Tool kit ***A*** is located in the tray under the luggage compartment carpet.

Depending on the vehicle, remove the cover ***B*** from the tool kit ***A*** by sliding it (movement ***C*** or ***D***). After use, ensure the tools are correctly stored.

Ensure correct positioning and locking (movement ***C*** or ***D***) of cover ***B***.

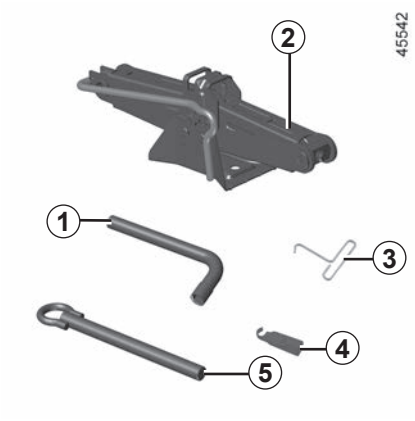

Wheelbrace *1*
Locks or unlocks the wheel bolts and tow eye ***5***.

Jack *2*
Fold it correctly before refitting it in its housing (ensure that the wheelbrace is correctly positioned).

Hubcap tool *3*
This tool is used to remove the wheel trims.

Wheel bolt guide *4*
To finish loosening or starting to tighten the wheel bolts.

Tow eye *5*
➥ 5.40

Do not leave the tools unsecured inside the vehicle as they may come loose under braking. After use, check that all the tools are correctly clipped into the tool kit, then position it correctly in its housing: risk of injury.

If bolts are supplied with the emergency spare wheel, you must use these bolts only for the emergency spare wheel.

The jack is designed for wheel changing purposes only. Under no circumstances should it be used for carrying out repairs underneath the vehicle or to gain access to the underside of the vehicle.

WHEEL TRIM, WHEEL

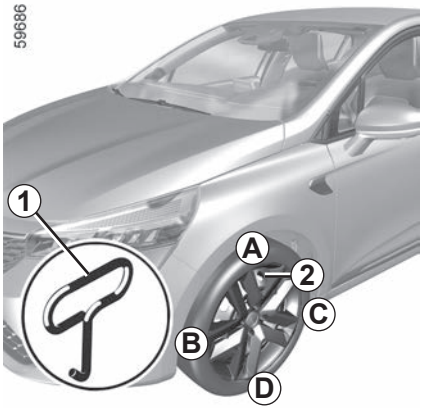

Remove the wheel trim using hubcap tool ***1*** (located in the tool kit) by engaging the hook in the opening near valve ***2***.

To refit it, align it with valve ***2***.

Push the retaining hooks in fully, starting on the side of valve ***A***, followed by ***B*** and ***C***, finishing at ***D*** opposite the valve.

Do not leave the tools unsecured inside the vehicle as they may come loose under braking.

After use, check that all the tools are correctly clipped into the tool kit, then position it correctly in its housing: risk of injury.

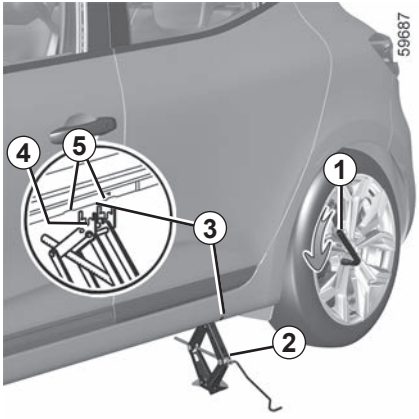

Switch on the hazard warning lights.

Keep the vehicle away from traffic and on a level surface where it will not slip.

Apply the parking brake and engage a gear (first or reverse, or **P** for automatic transmissions).

Ask all the passengers to leave the vehicle and keep them away from traffic.

Vehicles equipped with a jack and wheelbrace

If necessary, remove the wheel trim.

Use the wheel brace ***1*** to slacken off the wheel bolts.

Position it so as to be able to push from above.

Place the jack ***2*** horizontally.

The jack head **must** be lined up with the sill closest to the wheel concerned and indicated by the arrow ***3***.

If the vehicle is parked on the hard shoulder, you must warn other road users of your vehicle's presence with a warning triangle or with other devices as per the legislation applying to the country you are in.

Start cranking the jack by hand, positioning the ***4*** jack support plate in the slightly indented groove underneath the vehicle, located between the two notches ***5*** and in the direction of the arrow ***3***.

Continue to crank the jack so that the baseplate is correctly positioned (it should be underneath the vehicle and aligned with the jack head).

Turn it a few times to lift the wheel off the ground.

Undo the bolts and take off the wheel.

Fit the emergency spare wheel on the central hub and turn it to locate the mounting holes in the wheel and the hub.

Tighten the bolts, checking that the wheel is correctly positioned on its hub.

Lower the jack.

With the wheel on the ground, tighten the bolts fully and have the tightness of the bolts checked and the emergency spare wheel pressure checked as soon as possible.

If you have a puncture, replace the wheel as soon as possible.

A tyre which has been punctured should always be inspected (and repaired, where possible) by a specialist.

Vehicle fitted with a tyre pressure loss warning system

In the event of under-inflation (punctures, under-inflation etc.), the warning light appears on the instrument panel. ➥ 2.40.

Do not leave the tools unsecured inside the vehicle as they may come loose under braking.

After use, check that all the tools are correctly clipped into the tool kit, then position it correctly in its housing: risk of injury.

If bolts are supplied with the emergency spare wheel, you must use these bolts only for the emergency spare wheel.

The jack is designed for wheel changing purposes only.

Under no circumstances should it be used for carrying out repairs underneath the vehicle or to gain access to the underside of the vehicle.

Tyre and wheel safety

The tyres are the only contact between the vehicle and the road, so it is essential to keep them in good condition.

You must make sure that your tyres con- form to local road traffic regulations.

Maintaining the tyres

The tyres must be in good condition and the tread form must have sufficient depth; tyres approved by our Technical Department have wear warning strips ***1*** which are **indicators moulded into the tread at several points.**

When the tyre tread has been worn to the level of the warning strips, **they become visible *2***: it is **then** necessary to replace your tyres because the tread rubber is now only **1.6 mm deep at most, resulting in poor road holding on wet roads.**

An overloaded vehicle, long journeys by motorway, particularly in very hot weather, or continual driving on poorly surfaced minor roads will lead to more rapid tyre wear and affect safety.

Incidents which occur when driving, such as striking the kerb, may damage the tyres and wheel rims, and could also lead to misalignment of the front or rear axle geometry. In this case, have the condition of these checked by an approved dealer.

Tyre pressures

Adhere to the tyre pressures (including the emergency spare wheel). The tyre pressures should be checked at least once a month and additionally before any long journey (refer to the label affixed to the edge of the driver's door).

Incorrect tyre pressures lead to abnormal tyre wear and unusually hot running. These are factors which may seriously affect safety and lead to:

– poor road holding;

– risk of bursting or tread separation.

The pressure depends on the load and the speed of use. Adjust the pressure according to the conditions of use (refer to the label affixed to the edge of the driver's door).

Pressures should be checked when the tyres are cold; ignore higher pressures which may be reached in hot weather or following a fast journey.

If tyre pressures cannot be checked when the tyres are **cold**, assume an increase of **0.2** to **0.3** bar (or **3 PSI**).

Never deflate a hot tyre.

Please be aware that a poorly tightened or missing valve cap can make the tyres less airtight and lead to pressure loss.

Always use valve caps identical to those fitted originally and tighten them fully.

Vehicle fitted with a tyre pressure loss warning system

In the event of under-inflation (punctures, under-inflation etc.), the warning light appears on the instrument panel. ➥ 2.40.

Emergency spare wheel

➥ 5.2, ➥ 5.11.

Changing wheels around

This practice is not recommended.

Fitting new tyres

For your safety, please respect the speed limit.

When they need to be replaced, only tyres of the same make, size, type and profile should be used on a single axle.

They must either have a load capacity and speed rating at least equal to those of the original tyres, or be recommended by an authorised dealer.

Failure to heed these instructions could endanger your safety and affect your vehicle's roadworthiness.

Risk of loss of control of the vehicle.

Use in winter

Chains

For safety reasons, fitting snow chains to the rear axle is strictly forbidden.

Chains cannot be fitted to tyres which are larger than those originally fitted to the vehicle.

One-way tyres

An one-way tyre must only be fitted in one direction. You must observe this direction.

If an one-way tyre must be fitted in the opposite to its direction of rotation following a puncture, drive with caution, particularly on a wet road, because the tyre specifications will not be adapted.

Chains may only be fitted to tyres of the same size as those originally fitted to **your vehicle**.

Snow or Winter tyres

We would recommend that these be fitted to all **four wheels** to ensure that your vehicle retains maximum adhesion.

Warning: These tyres sometimes have a specific direction of rotation and a maximum speed index which may be lower than the maximum speed of your vehicle.

Studded tyres

This type of equipment may only be used for a limited period and as laid down by local legislation. It is necessary to observe the speed specified by current legislation.

These tyres must, at a minimum, be fitted to the two front wheels.

In all cases, we would recommend that you contact an approved Dealer who will be able to advise you on the choice of equipment which is most suitable for your vehicle.

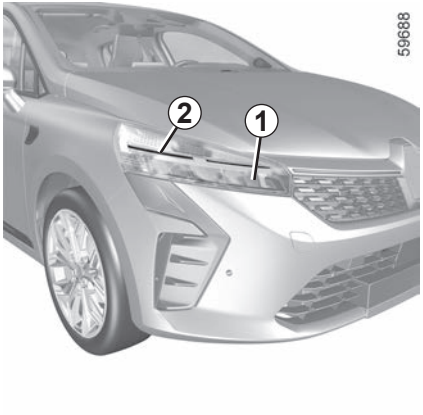

Direction indicators/dipped beam headlights/LED main beam headlights *1*

Please see an authorised dealer.

LED daytime running lights/ side lights *2*

(depending on the vehicle)

Please see an authorised dealer.

Any operation on (or modification to) the electrical system must be performed by an approved dealer since an incorrect connection might damage the electrical equipment (harness, components and in particular the alternator). In addition, your Dealer has all the parts required for fitting these units.

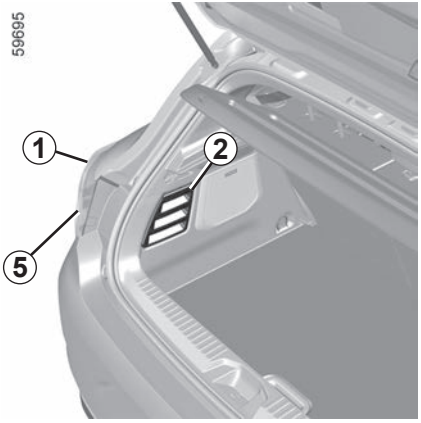

LED side light/brake light *1*

Consult an approved dealer

Direction indicators *5*

– Open the boot;

– remove the trim ***2***;

– unscrew the nut ***3***;

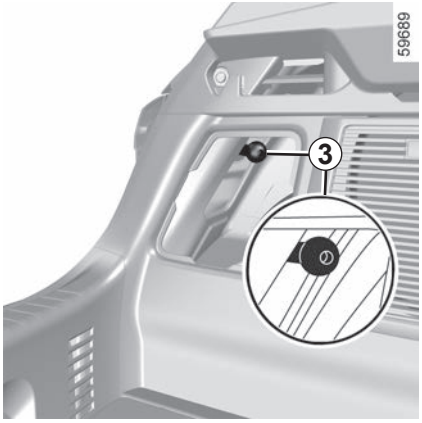

– release the light assembly from outside the vehicle by pulling towards the rear;

– remove the ***4*** bulb holder by unscrewing it a quarter of a turn, then replace the bulb.

Bulb type: WY16W.

The bulbs are under pressure and can break when replaced.

Risk of injury.

Refitting

To refit, proceed in the reverse order, taking care not to damage the wiring.

To comply with current legislation, or as a precaution, you can obtain an emergency kit from your approved dealer containing a set of spare bulbs and fuses.

Fog lights and reversing lights *6*

Consult an approved dealer

High level brake light *7*

Consult an approved dealer.

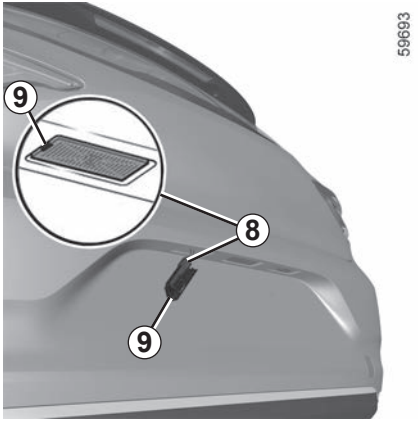

Number plate lights *8*

– Unclip the light by pressing tab ***9***;

– remove the light cover to gain access to the bulb.

Bulb type: W5W.

The bulbs are under pressure and can break when replaced.

Risk of injury.

LED number plate lights *10*
(depending on vehicle)

Consult an approved Dealer.

LED side repeaters*11*
(depending on vehicle)

Consult an approved dealer.

The bulbs are under pressure and can break when replaced.

Risk of injury.

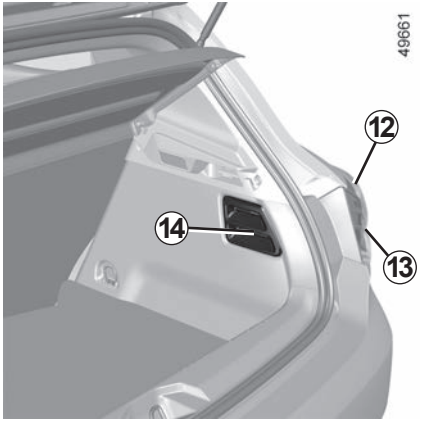

Special case of the E-Tech hybrid version

LED side light/brake light *12*

Consult an approved dealer

Direction indicators *13*

– Open the boot;

– remove the trim ***14***;

– for the right-hand light, move aside the duct ***15*** to access the nut ***16***;

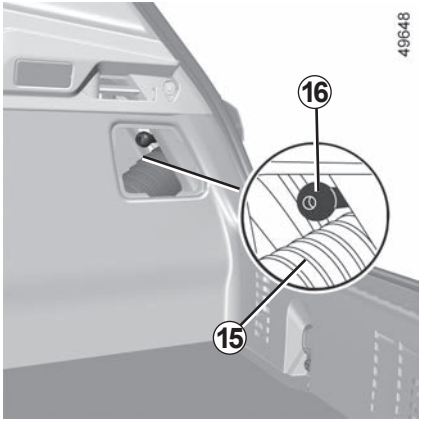

– unscrew the nut ***16***;

– release the light assembly from outside the vehicle by pulling towards the rear;

– remove the ***17*** bulb holder by unscrewing it a quarter of a turn, then replace the bulb.

Bulb type: WY16W.

The bulbs are under pressure and can break when replaced.

Risk of injury.

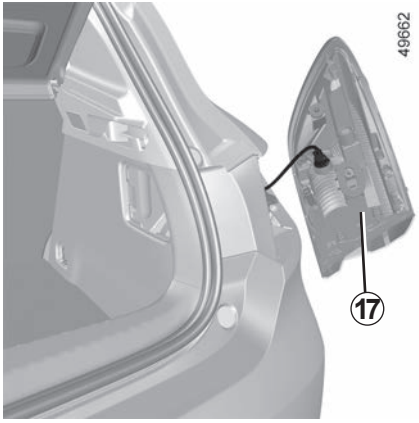

Refitting

To refit, proceed in the reverse order, taking care not to damage the wiring.

To comply with current legislation, or as a precaution, you can obtain an emergency kit from your approved dealer containing a set of spare bulbs and fuses.

When refitting the right-hand light, ensure that the duct ***4*** has been replaced in its original position.

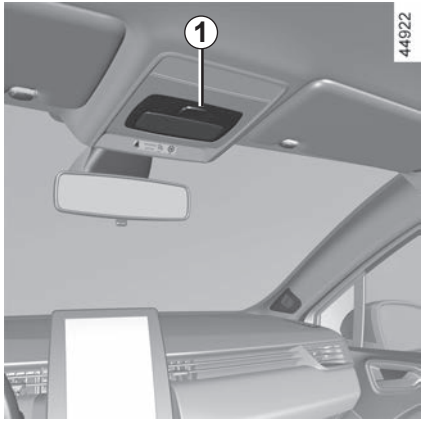

Courtesy light

Courtesy light fitted with diffusers *1*

Unclip the lens (using a flat-blade screwdriver or similar).

Remove the bulb concerned.

Bulb type: W5W.

The bulbs are under pressure and can break when replaced.

Risk of injury.

Map reading lights *2*

Consult an authorised dealer.

Luggage compartment light

Unclip the light ***3*** by pressing the tab on its left side (using a flat-bladed screwdriver or similar).

Remove the bulb concerned.

Bulb type: W5W.

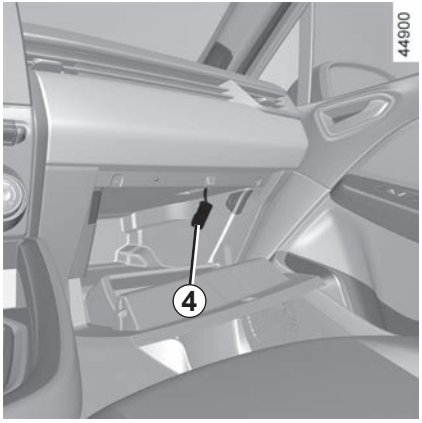

Glovebox light

Unclip the light ***4*** by pressing the tab on its left side (using a flat-bladed screwdriver or similar).

Remove the bulb concerned.

Bulb type: W5W.

Ambient lighting

Please consult an authorised dealer.

Replacing the battery

Open the case at slot ***1*** using a flat-blade screwdriver or similar, and replace the battery ***2***, observing the type and polarity shown on the back of the cover.

Note: It is not advisable to touch the electronic circuit in the key cover when replacing the battery.

When refitting, ensure that the cover is correctly clipped on and the screw tightened.

When they need to be replaced, be sure to use the same or equivalent type of battery (consult an Approved Dealer).

The batteries are available from approved Dealers, and their service life approximately two years.

Check that there is no dye on the battery: risk of an incorrect electrical contact.

Operating faults

If the battery is too weak to ensure correct operation, you will still be able to start and lock/unlock the vehicle ➥ 1.27.

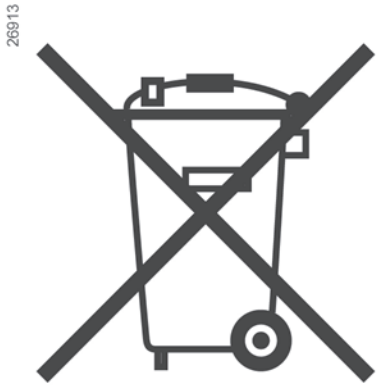

Do not throw away your used batteries; give them to an organisation responsible for collecting and recycling batteries.

When replacing:

– make sure that the batteries are correctly inserted.

Risk of explosion.

– if the flap does not close correctly, do not use and keep out of reach of children.

Precautions relating to batteries:

– keep (new or used) batteries out of reach of children;

– do not swallow batteries;

Risk of chemical burns which may lead to death.

– if ingested or inserted into any part of the body, consult a doctor as soon as possible.

Replacing the battery

When the message “Keycard Battery Low” appears on the instrument panel, replace the battery in the card:

– slide the rear casing ***1*** downwards while pressing on zone ***A***;
– remove the battery cover ***2***;
– remove the battery by pressing on one side and lifting the other;
– replace it according to the direction and template shown inside the cover.

When refitting, proceed in the reverse order, then press one of the buttons on the card four times, close to the vehicle: the next time the vehicle is started, the message will disappear.

Check that the cover is clipped shut.

Note: Do not touch the electronic circuit or contacts on the card when replacing the battery.

The batteries are available from approved Dealers, and their service life approximately two years. Check that there is no dye on the battery: risk of an incorrect electrical contact.

When they need to be replaced, be sure to use the same or equivalent type of battery (consult an Approved Dealer).

When replacing:

– make sure that the batteries are correctly inserted.

Risk of explosion.

– if the flap does not close correctly, do not use and keep out of reach of children.

Operating faults

If the battery is too weak to ensure correct operation, you will still be able to start and lock/unlock the vehicle ➥ 1.27.

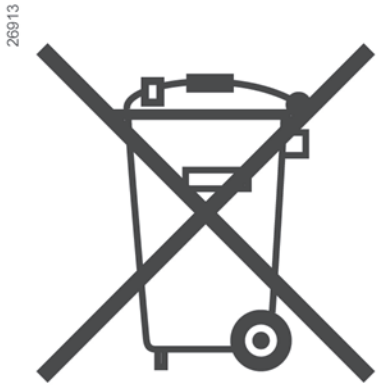

Do not throw away your used batteries; give them to an organisation responsible for collecting and recycling batteries.

Precautions relating to batteries:

- keep (new or used) batteries out of reach of children;
- do not swallow batteries;

  Risk of chemical burns which may lead to death.
- if ingested or inserted into any part of the body, consult a doctor as soon as possible.

To avoid all risk of sparks:

– Ensure that any power consumers (courtesy lights, etc.) are switched off before disconnecting or reconnecting a battery;

– when charging, stop the charger before connecting or disconnecting the battery;

– do not place metal objects on the battery as this could create a short circuit between the terminals;

– always wait at least five minutes after the engine has been switched off before disconnecting a battery;

– make sure that you reconnect the battery terminals after refitting.

Before carrying out any action in the engine compartment, you must switch off the ignition. ➥ 2.4 ➥ 2.7.

Connecting a battery charger

The battery charger must be compatible with a battery with nominal voltage of 12 volts.

Do not disconnect the battery when the engine is running. **Follow the instructions given by the manufacturer of the battery charger you are using.**

Special procedures may be required to charge some batteries. Contact your approved dealer.

Avoid all risk of sparks which may cause an immediate explosion, and charge the battery in a well ventilated area.

Risk of serious injury.

Handle the battery with care as it contains sulphuric acid, which must not come into contact with eyes or skin. If it does, wash the affected area with plenty of cold water. If necessary, consult a doctor.

Keep naked flames, red hot objects and sparks away from the battery components as there is a **risk of explosion**.

Please note when working close to the engine that it may be hot. In addition, the engine cooling fan may start at any moment. The warning light in the engine compartment reminds you of this.

Risk of injury.

Starting the vehicle using the battery from another vehicle

If you have to use the battery from another vehicle to start, obtain suitable jump leads (with a large cross section) from an approved dealer or, if you already have jump leads, ensure that they are in perfect condition.

The two batteries must have an identical nominal voltage: 12 volts.

The battery supplying the current should have a capacity (amp-hours, Ah) which is at least the same as that of the discharged battery.

Ensure that there is no risk of contact between the two vehicles (risk of short circuiting when the positive terminals are connected) and that the discharged battery is properly connected. Switch off your vehicle ignition.

Start the engine of the vehicle supplying the current and run it at an intermediate engine speed.

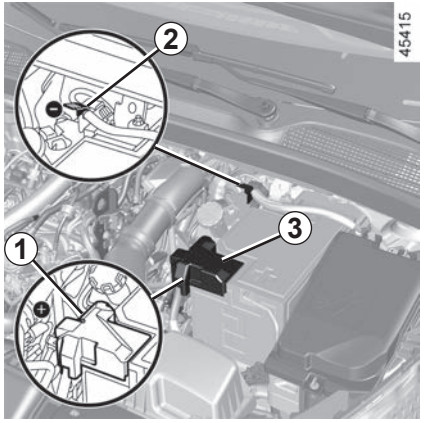

Note: on the E-Tech hybrid version, as the battery cannot be directly accessed, it is necessary to use the remote terminals located in the engine compartment. Refer to the following pages.

Battery in engine compartment

The battery is not directly accessible.

Use the **terminal *1*** (**+**) and the **terminal *2*** (**–**) in the engine compartment.

Raise the cover ***3*** of the **terminal *1*** (**+**).

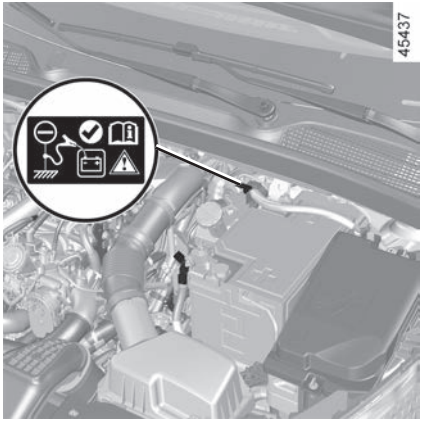

Do not use your E-Tech hybrid vehicle to restart a “12 V” battery in another vehicle.

The electrical power in the secondary “12 V” battery of an E-Tech hybrid vehicle is not sufficient for this operation.

Risk of damage to the vehicle.

BATTERY: troubleshooting (3/5)

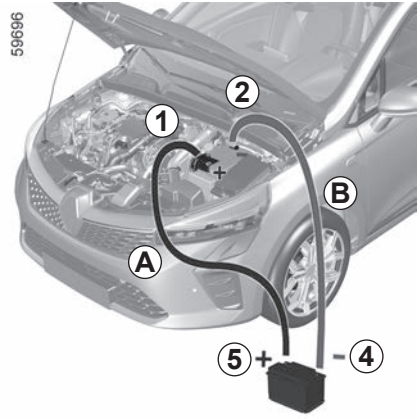

Attach the positive cable ***A*** to the **terminal *1*** (**+**) then to the **terminal *5*** (**+**) of the battery supplying the current.

Connect the negative cable ***B*** to the **terminal *4*** (**–**) of the battery supplying the current and then to the **terminal *2*** (**–**).

Start the engine of the vehicle supplying the current and run it at an intermediate engine speed.

If your vehicle's engine does not start immediately, switch off the ignition and wait a few seconds before repeating the operation.

With the engine running, disconnect the ***A*** and ***B*** cables in the reverse order (***2*** - ***4*** - ***5*** - ***1***).

Reposition the cover ***3*** of the terminal ***1*** (**+**).

Check that there is no contact between leads ***A*** and ***B*** and that the positive lead ***A*** is not touching any metal parts on the vehicle supplying the current.

Risk of injury and/or damage to the vehicle.

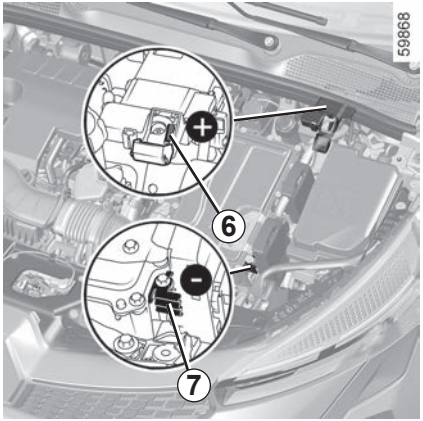

Remote terminals

(E-Tech hybrid version)

Use the **terminal *6*** (**+**) and the **terminal *7*** (**–**) in the engine compartment.

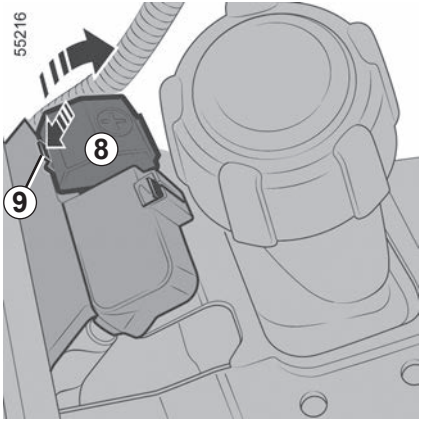

Note: open the cover ***8*** of the **terminal *6*** (**+**) by pressing the button ***9*** as indicated by the arrow.

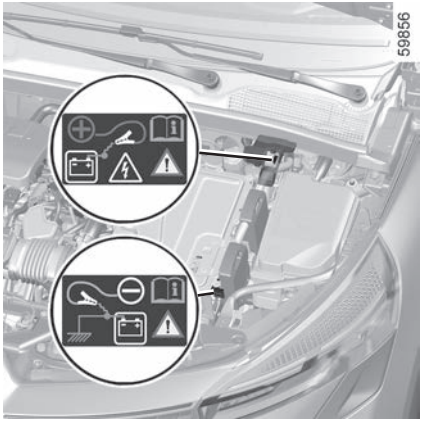

It is forbidden to disconnect the positive cable in the engine compartment.

Risk of the engine starting inadvertently.

Risk of burns by projection of sparks.

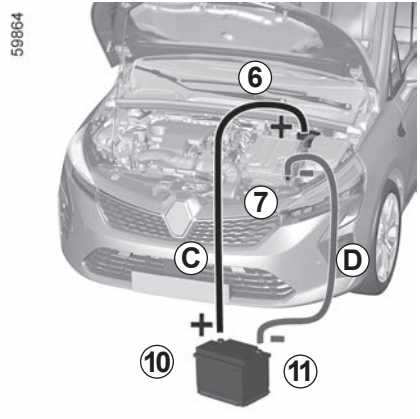

Attach the positive cable ***C*** to the **terminal *6*** (+), then to the **terminal *10*** (+) of the battery supplying the current.

Attach the negative cable ***D*** to the **terminal *11*** (–) of the battery supplying the current and then to the **terminal *7*** (–).

Press the brake pedal and the Start button or, depending on the vehicle, turn on the ignition key. As soon as the ignition is switched on, disconnect the ***C*** and ***D*** cables in the reverse order (***6 - 10 - 11 - 7***).

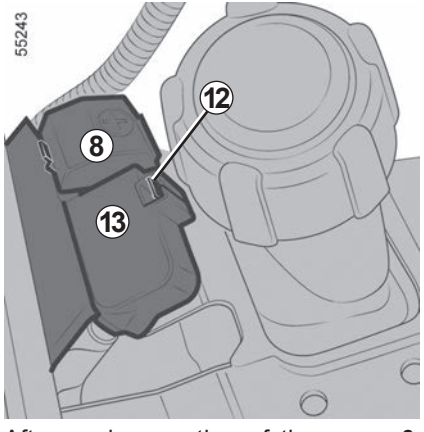

After each operation of the cover ***3***, check the terminal block cover ***13*** on its tab ***12***.

Check that there is no contact between leads ***C*** and ***D*** and that the positive lead ***C*** is not touching any metal parts on the vehicle supplying the current.

Risk of injury and/or damage to the vehicle.

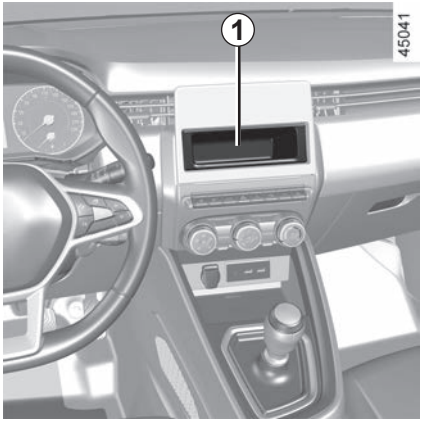

Radio location *1*

Unclip the blanking cover. The aerial, + and – supply and speaker wire connections are located behind it.

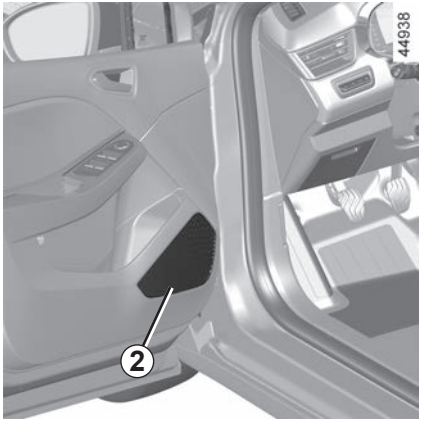

Front door speakers *2*

To install any equipment, please consult an authorised dealer.

- In all cases, it is very important to follow the manufacturer's instructions carefully.
- The specifications of the brackets and wires (available from our network) vary depending on the equipment level of your vehicle and the type of radio.

  Consult an approved Dealer to find out the correct part number.
- No work may be carried out on the vehicle's electrical or radio circuits, except by approved dealers: an incorrectly connected system may result in damage being caused to the electrical equipment and/or the components connected to it.

Electrical and electronic accessories
Before installing this type of accessory (particularly for transmitters/receivers: frequency bandwidth, power level, position of the aerial, etc.), make sure it is compatible with your vehicle. You can get advice from an authorised dealer.
Before connecting an accessory to a socket, please ensure that you do not exceed the maximum power authorised for the socket ➥ 3.18 ➥ 3.32. **Fire hazard.**
Any work on the vehicle's electrical and/or electronic circuit must only be carried out by a qualified professional. Any incorrect connection and/or installation of electrical/electronic accessories not approved by the manufacturer may cause:
– damage to the electrical and/or electronic equipment;
– damage to the components connected to it;
– the collection and use of vehicle data;
– an invasion of privacy (modification, deletion or unwarranted access to personal data).
Risk of serious accidents. Risk of invasion of privacy.
If you have electrical equipment fitted in future, make sure that you are notified of the rating and position of the corresponding fuse.

Using the diagnostic socket
The use of electronic accessories on the diagnostic socket may cause serious disturbance to the vehicle's electronic systems and/or cause invasion of privacy (modification, deletion or unwarranted access to personal data). For your safety we recommend that you use only electronic accessories approved by the manufacturer, consult an Approved Dealer. **Serious accident risk**. **Risk of invasion of privacy.**

Fitting aftermarket accessories
If you wish to install accessories on the vehicle: please contact an authorised dealer. Also, to ensure the correct operation of your vehicle, and to avoid any risk to your safety, we recommend that you use only accessories specifically designed for your vehicle, which are the only accessories for which the manufacturer will provide a warranty.
If you are using an anti-theft device, only attach it to the brake pedal.

Obstructions to the driver
On the driver's side, only use mats suitable for the vehicle, attached with the pre-fitted components, and check the fitting regularly. Do not lay one mat on top of another. **There is a risk of wedging the pedals**

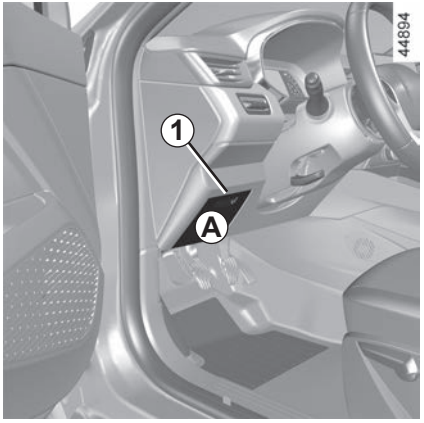

Fuse boxes

If any electrical component does not work, check the condition of the fuses.

Passenger compartment fuses *A*

Unclip the access flap ***1***.

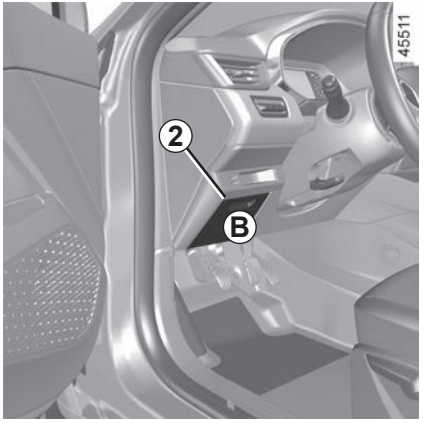

Passenger compartment fuses *B*

Unclip the access flap ***2***.

Open and tilt the ***2*** flap completely then pull it downwards to move it in order to access the fuses.

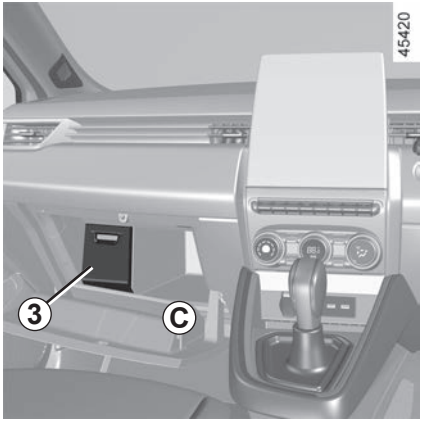

Fuses located in the passenger compartment behind a flap in the *C* glovebox

Unclip the access flap ***3***.

To comply with current legislation, or as a precaution, you can obtain an emergency kit from your approved dealer containing a set of spare bulbs and fuses.

Check the fuse in question and **replace it,** if necessary, **by a fuse of the same rating.**

If a fuse is fitted with too high a rating, it may cause the electrical circuit to overheat (risk of fire) in the event of an item of equipment using an excessive amount of current.

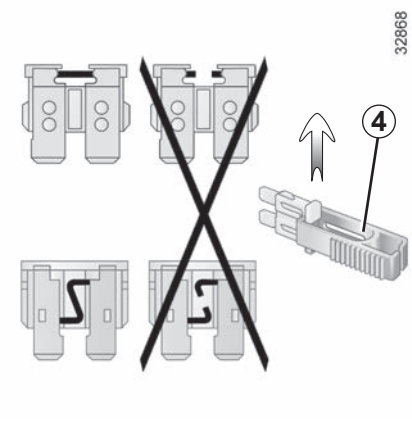

Tweezers *4*

Remove the fuse using the tweezers ***4*** on the back of the flap.
To remove the fuse from the tweezers, slide the fuse to the side.

It is not advisable to use the free fuse locations.

To comply with current legislation, or as a precaution, you can obtain an emergency kit from your approved dealer containing a set of spare bulbs and fuses.

Check the fuse in question and **replace it,** if necessary, **by a fuse of the same rating.**

If a fuse is fitted with too high a rating, it may cause the electrical circuit to overheat (risk of fire) in the event of an item of equipment using an excessive amount of current.

Allocation of fuses
(the presence of certain fuse depends on the vehicle equipment level)

Symbol	Allocation
	Windscreen washer
	Multimedia accessories socket, multimedia screen
	Front and rear second row accessories socket
	Horn
	Towbar socket
	Heated rear view mirrors
STOP	Brake lights, passenger compartment central unit
BCM	Passenger compartment centre unit, rear wiper, rear fog light
	Direction indicator lights, hazard warning lights, high level brake lights

Use the fuse allocation label in the storage compartment to identify the fuses.

Certain fuses should only be replaced by a qualified professional. These fuses are not listed on the label.

Only change the fuses represented on the label.

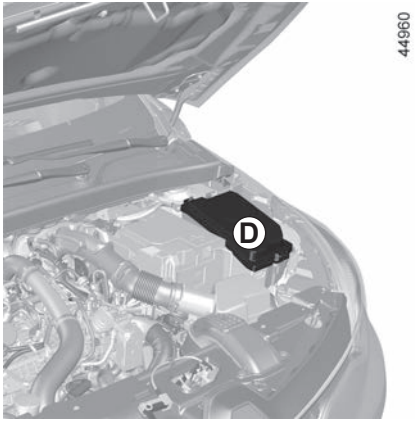

Fuses in engine compartment *D*

Some functions are protected by fuses located in the engine compartment (unit ***D***).

However, because of their reduced accessibility, **we advise you to have your fuses replaced by an approved Dealer**.

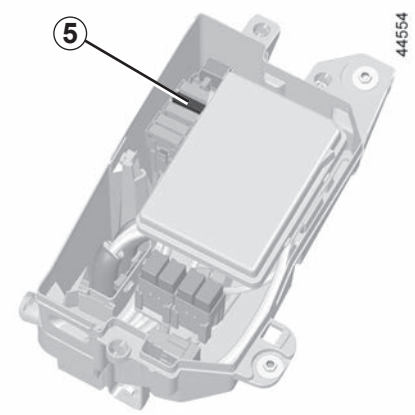

LPG fuse in the front compartment

5 fuse: LPG circuit shut-off.

Please note when working close to the engine that it may be hot. In addition, the engine cooling fan may start at any moment. The warning light in the engine compartment reminds you of this.

Risk of injury.

Before carrying out any action in the engine compartment, you must switch off the ignition. ➥ 2.4 or ➥ 2.7.

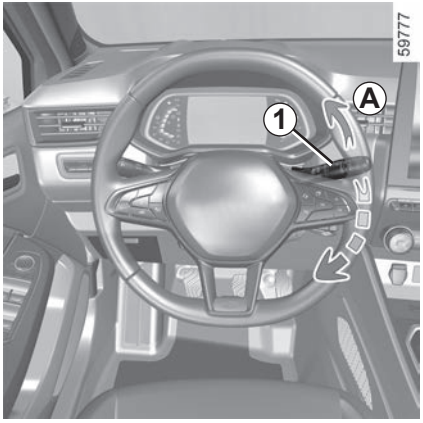

Replacing the windscreen wiper blades 2

To replace the wipers, first put them in the service position ***B***.

With the engine running or the ignition on:

– set the stalk ***1*** to position ***A*** twice in succession (single sweep): the wiper blades will stop in position ***B*** away from the bonnet;
– lift the wiper arm ***3***;
– lower the ***4*** tab then remove the blade ***2***.

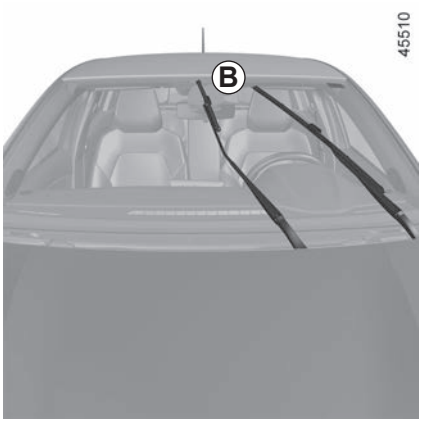

To refit

To refit the wiper blade ***2***, insert it in its housing in the arm ***3***, then clip it until you hear a click.

Make sure that the blade is correctly locked in position.

To return the blades to lowered position, make sure that the blades are folded down onto the windscreen then set the ***1*** stalk to position ***A*** (single sweep): the windscreen wiper blades will fold into the bonnet when the ignition is switched on.

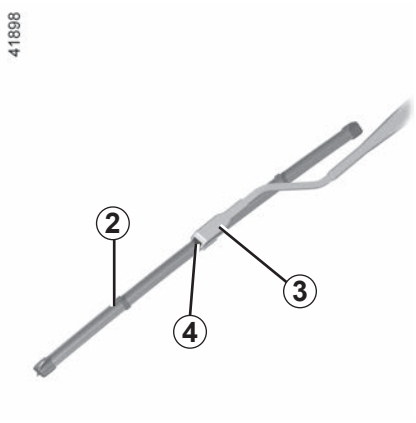

Check the condition of the wiper blades.

You are responsible for their service life:

– clean the blades, windscreen and rear screen regularly with soapy water;
– do not use them when the windscreen or rear screen are dry;
– free them from the windscreen or rear screen when they have not been used for a long time.

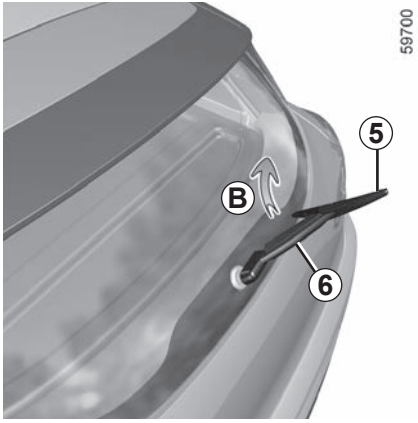

Rear screen wiper blade *5*

Stalk in stop position (deactivated):

– lift the wiper arm ***6***;

– turn the blade horizontally ***5*** (movement ***B***) until it unclips;

– remove the blade by pulling it.

To refit

To refit the wiper blade, proceed in the reverse order to removal.

Make sure that the blade is correctly locked in position.

Check the condition of the wiper blades.

– clean the blades, windscreen and rear screen regularly with soapy water;

– do not use them when the windscreen or rear screen are dry;

– free them from the windscreen or rear screen when they have not been used for a long time.

– In frosty weather, make sure that the wiper blades are not stuck by ice (to avoid the risk of the motor overheating).

– Check the condition of the wiper blades. Replace the wiper blades as soon as they begin to lose efficiency (approximately once a year).

When changing the blade, when it has been removed, do not let the wiper arm fall against the window: risk of breaking the window.

Before changing the rear wiper blade, make sure the stalk is in the stop position (deactivated).

Risk of injury.

Before towing, set the lever to neutral (**N** position on vehicles with an automatic gearbox) **then wait approximately one minute** (on the E-Tech hybrid version), unlock the steering column then release the parking brake.

Steering column unlocking

Insert the key into the ignition, set to **ON 2** position or, depending on the vehicle, with the card in the passenger compartment, press the engine start button for approximately **two seconds**.

Reposition the lever to neutral (position **N** for vehicles fitted with an automatic gearbox).

On the E-Tech hybrid version, **wait approximately one minute** before towing.

The steering column unlocks and the accessory functions are powered: you can use the vehicle's lights (direction indicators, brake lights etc.).

At night the vehicle must have its lights on.

Once you have finished towing, you can (depending on the vehicle) press the engine start button twice (risk of running down the battery).

The speed specified by current legislation for towing must always be observed.

If you are driving the towing vehicle, do not exceed the permissible towing weight for your vehicle ➥ 6.10.

Towing a vehicle with an automatic gearbox

Transport the vehicle on a trailer or tow it with the front wheels off the ground.

In exceptional circumstances, you may tow it with all four wheels on the ground, only in a forward gear, with the gear lever in neutral position **N** over a maximum distance of 50 miles (80 km) and at a maximum speed of 16 mph (25 km/h).

Leave the card in the vehicle during towing.

Risk of the steering column locking.

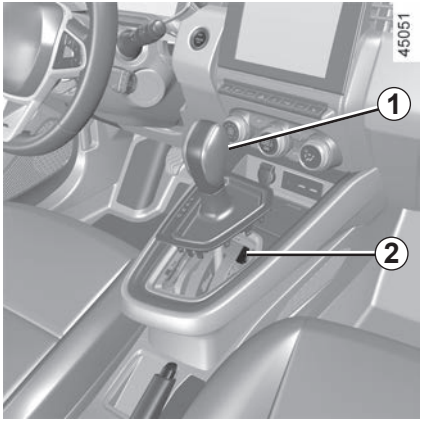

When setting off, if the lever is locked in position **P** even though you are pressing the brake pedal, the lever can be released manually in order to unlock the drive wheels.

To do this, unclip the base of the gaiter and press the ***2*** push button while simultaneously pressing the ***1*** button on the lever to unlock the lever and shift to position **N**.

Contact an authorised dealer as soon as possible.

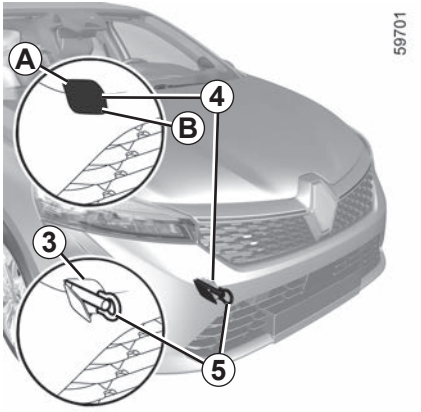

Only use the front *3* and rear *7* towing points (never use the driveshafts or any other part of the vehicle).

These towing points may only be used for pulling.

They must never be used for lifting the vehicle directly or indirectly.

Ensure that the towing eye is bolted correctly.

Risk of losing the towed object.

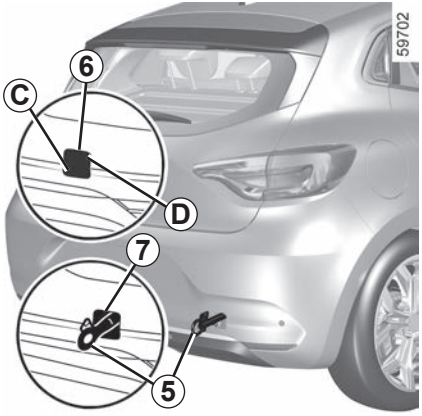

Access to towing points

Front towing point
Press zone ***A*** and keep depressed while pulling zone ***B*** to open flap ***4***.

Rear towing point
Press zone ***C*** and keep depressed while pulling zone ***D*** to open flap ***6***.

When the ignition is off, the steering and braking assistance functions no longer operate.

Tighten the towing hitch *5* fully: first by hand until it stops, then finish by locking it with the wheel brace or, depending on the vehicle, the lever.

Only use the towing hitch ***5*** and the wheelbrace or lever provided with the tools. ➥ 5.9.

– Use a rigid towing bar. If a rope or cable is used (where the law allows this), the vehicle being towed must be able to brake.
– A vehicle must not be towed if it is not fit to be driven.
– Avoid accelerating or braking suddenly when towing, as this may result in damage being caused to the vehicle.
– In all cases, it is advisable not to exceed **15.5 mph (25 km/h)**.

Do not leave the tools unsecured inside the vehicle as they may come loose under braking.

OPERATING FAULTS (1/7)

Using the card	POSSIBLE CAUSES	WHAT TO DO
The card does not lock or unlock the doors.	Card battery is flat.	Replace the battery. You will still be able to lock/unlock and start your vehicle. ➥ 1.27 and ➥ 2.3 or ➥ 2.7.
	Use of appliances operating on the same frequency as the card (mobile phone, etc.).	Stop using the devices or use the key provided. ➥ 1.27.
	Vehicle located in a high electromagnetic radiation zone. Vehicle battery flat.	Use the key that is built into the card ➥ 1.27.
	The message “Place card on zone + START” appears on the instrument panel.	Place the card in the placement area ➥ 2.7 then press the START button.
	The vehicle is started.	With the engine running, the card’s locking/unlocking device is blocked. Turn off the ignition.
	Desynchronisation of the card	Unlock the driver’s door by inserting the key integrated in the card into the door lock ➥ 1.27 then place the card in the placement area ➥ 2.7 and press the START button to synchronise the card.

OPERATING FAULTS (2/7)

The following advice will enable you to carry out quick, temporary repairs. For safety reasons you should always contact an approved dealer as soon as possible.

Using the remote control	POSSIBLE CAUSES	ACTION REQUIRED
The remote control does not lock or unlock the doors.	The remote control battery is flat.	Use the emergency key.
	Use of appliances operating on the same frequency as the remote control (mobile phone, etc.).	Stop using the devices or use the key.
	Vehicle located in a high electromagnetic radiation zone. Discharged battery.	Replace the battery. You will still be able to lock/unlock and start your vehicle. ➥ 1.27 and ➥ 2.3 or ➥ 2.7.
	The vehicle is started.	With the engine running, the key's locking/unlocking device is blocked. Turn off the ignition.
	Desynchronisation of the remote control	Unlock the driver's door by inserting the key into the door lock ➥ 1.27, then start the engine to synchronise the remote control ➥ 2.4 or ➥ 2.7.

OPERATING FAULTS (3/7)

The starter is activated	POSSIBLE CAUSES	ACTION REQUIRED
The instrument panel indicator lights are weak or fail to light up and the starter does not turn.	Battery terminals not tight, battery terminals disconnected or oxidised.	Retighten or reconnect the terminals, or clean them if they are oxidised.
	Discharged battery or not operational.	Connect another battery to the faulty battery. ➥ 5.27 or replace the battery if necessary. Do not push the vehicle if the steering column is locked.
	Faulty circuit.	Consult an approved dealer.
The engine will not start.	Starting conditions are not fulfilled.	➥ 2.3 or ➥ 2.7.
	The card does not work.	Place the card in the recess provided for this purpose on the centre console. ➥ 2.3 or ➥ 2.7.
With the vehicle stationary, engine cold, the engine's idle speed is high.	Petrol version, this is not necessarily a fault. This may be caused by the increase in the engine temperature.	The engine's idle speed should decrease after about one minute. Otherwise, this may be caused by another fault. Call an approved Dealer.
The engine cannot be switched off.	Card not detected.	Place the card in the recess provided for this purpose on the centre console. Press and hold the start button.
	Electronic fault.	Press the start button 3 times quickly or press and hold.
The steering column remains locked.	Steering wheel locked.	Move the steering wheel while pressing the engine start button (or, depending on the vehicle, operating the ignition key) ➥ 2.3.
	Faulty electrical circuit.	Consult an approved dealer.

OPERATING FAULTS (4/7)

On the road	POSSIBLE CAUSES	WHAT TO DO
Vibrations.	Tyres not inflated to correct pressures, incorrectly balanced or damaged.	Check the tyre pressures: if this is not the problem, have them checked by an approved Dealer.
White smoke from the exhaust.	In the diesel version, this is not necessarily a fault. Smoke may be caused by particle filter regeneration.	.
	Petrol version, this is not necessarily a fault. Depending on the climate conditions (cold, humidity etc.), smoke may be produced under hard vehicle acceleration.	Reduce the engine speed and avoid sudden acceleration to gradually make the smoke disappear. Otherwise, this may be caused by another fault. Consult an approved dealer.
Smoke under the bonnet.	Short-circuit or cooling system leak.	Stop, switch off the ignition, stand away from the vehicle and contact an approved dealer.
The oil pressure warning light comes on:		
while cornering or braking	The level is too low.	Top up the engine oil ➥ 4.5.
is slow to go out or remains lit under acceleration	Loss of oil pressure.	Stop the vehicle and contact an approved Dealer.

OPERATING FAULTS (5/7)

On the road	POSSIBLE CAUSES	WHAT TO DO
Steering becomes heavy.	Assistance overheating.	Drive carefully at reduced speed, be aware of the level of force in the steering wheel needed to turn the wheels.
	Fault with the electric assistance motor. Fault in the assistance system	Consult an authorised dealer.
The engine is overheating. The coolant temperature indicator is in the warning zone and warning light STOP comes on.	Engine cooling fan not working.	Stop the vehicle, switch off the engine and contact an approved dealer.
	Coolant leaks.	Check the coolant reservoir: it should contain fluid. If there is no coolant, consult an authorised dealer as soon as possible.
Coolant boiling in the coolant reservoir.	Mechanical fault: damaged cylinder head gasket.	Stop the engine. Contact an approved dealer.

Radiator: In the event of a significant lack of coolant, remember that you must never top up using cold coolant while the engine is very hot. After any procedure on the vehicle which has involved even partial draining of the cooling system, it must be refilled with a new mixture prepared in the correct proportions. Reminder: only products approved by our Technical Department may be used for this purpose.

OPERATING FAULTS (6/7)

Electrical equipment	POSSIBLE CAUSES	WHAT TO DO
The wipers do not work.	Wiper blades stuck.	Free the blades before using the wipers.
	Faulty electrical circuit.	Consult an approved dealer.
	Fuse damaged.	Replace the fuse or have it replaced ➥ 5.34.
The wiper does not stop.	Faulty electrical controls.	Consult an approved dealer.
Direction indicators flashing more quickly.	Blown rear bulb.	➥ 5.17
The direction indicators do not work.	Faulty electrical circuit or control.	Consult an approved dealer.
	Fuse damaged.	Replace the fuse or have it replaced ➥ 5.34.
The lights do not come on or go off.	Faulty electrical circuit or control.	Consult an approved dealer.
	Fuse damaged.	Replace the fuse or have it replaced ➥ 5.34.

OPERATING FAULTS (7/7)

Electrical equipment	POSSIBLE CAUSES	WHAT TO DO
Traces of condensation in the headlights or rear lights.	Traces of condensation may be a natural phenomenon caused by variations in temperature and humidity. In this case, the traces will disappear slowly once the lights are switched on.	
The front seat belt reminder light comes on when the seat belts are fastened.	An object is stuck between the floor and the seat and is disrupting the operation of the sensor.	Remove all objects from underneath the front seats.

Section 6: Technical Specifications

Vehicle identification plate 6.2
Technical Information for the emergency services 6.3
Engine identification 6.4
Dimensions 6.6
Engine specifications 6.7
Weights 6.10
Towing weights 6.10
Replacement parts and repairs 6.11
Service sheets 6.12
Anticorrosion check 6.18

VEHICLE IDENTIFICATION PLATES

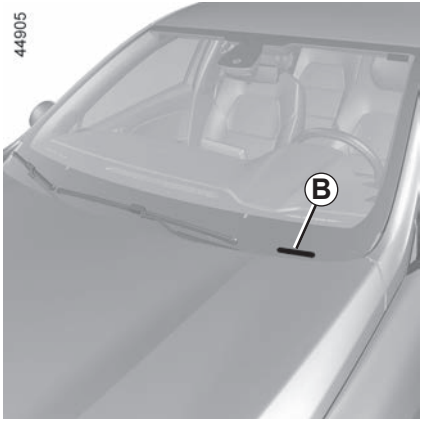

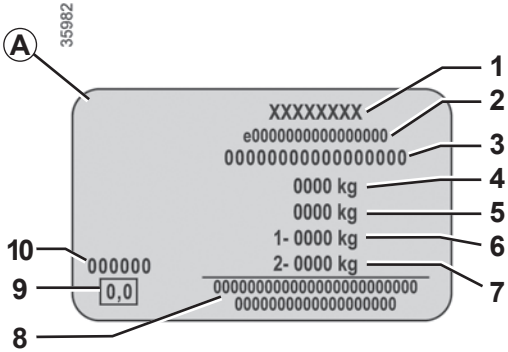

The information shown on the vehicle identification plate should be quoted on all correspondence or orders.

The presence and location of the information depends on the vehicle.

Vehicle identification plate *A*

1 Manufacturer name.

2 EC design number or approval number.

3 Identification number.
Depending on the vehicle, this information is also given on marking *B*.

4 MMAC (Maximum permissible all-up weight).

5 MTR (Gross train weight: vehicle fully loaded, with trailer).

6 MMTA (Maximum Permissible Weight) front axle.

7 MMTA rear axle.

8 Reserved for related or additional entries.

9 Diesel exhaust emissions.
Depending on the vehicle, this information is not indicated on the manufacturer's plate but on the engine smoke opacity label ➥ 2.17**.**

10 Paint reference (colour code).

TECHNICAL INFORMATION FOR THE EMERGENCY SERVICES

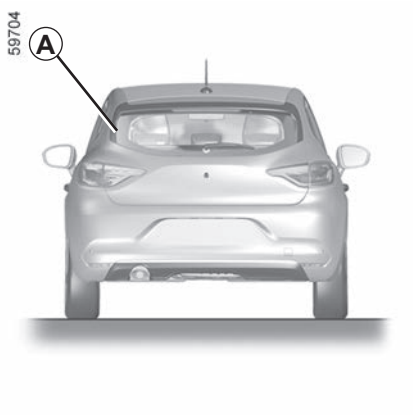

The QR Code on the ***A*** label allows emergency workers using a tablet or smartphone to immediately access the technical information useful for working on the vehicle in the event of an accident.

Ensure that the ***A*** label is always visible and present on the windscreen as well as the rear screen.

Any modification or damage would prevent access to the information.

ENGINE IDENTIFICATION (1/2)

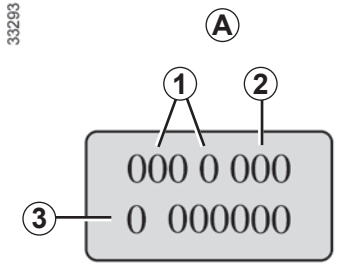

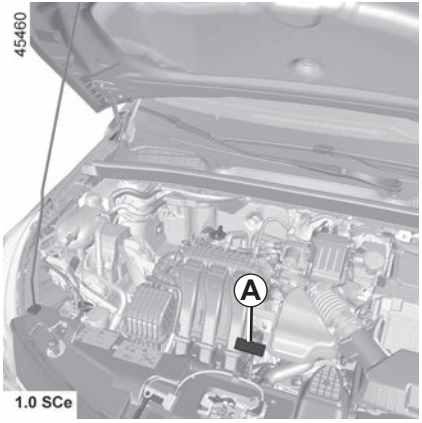

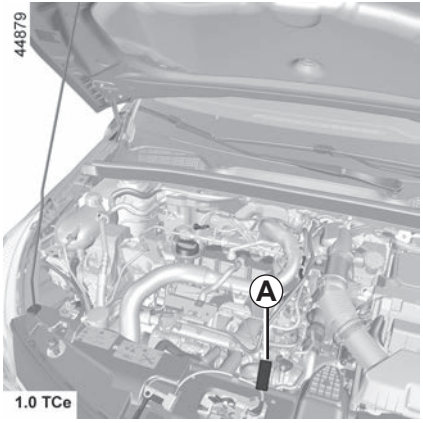

Please quote the engine identification information in area *A* in all correspondence or orders.
(Location varies depending on engine)

1 Engine type.

2 Engine suffix.

3 Engine serial number.

ENGINE IDENTIFICATION (2/2)

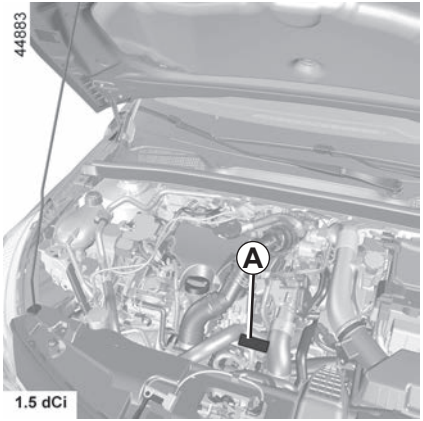

E-Tech hybrid version

DIMENSIONS (in metres)

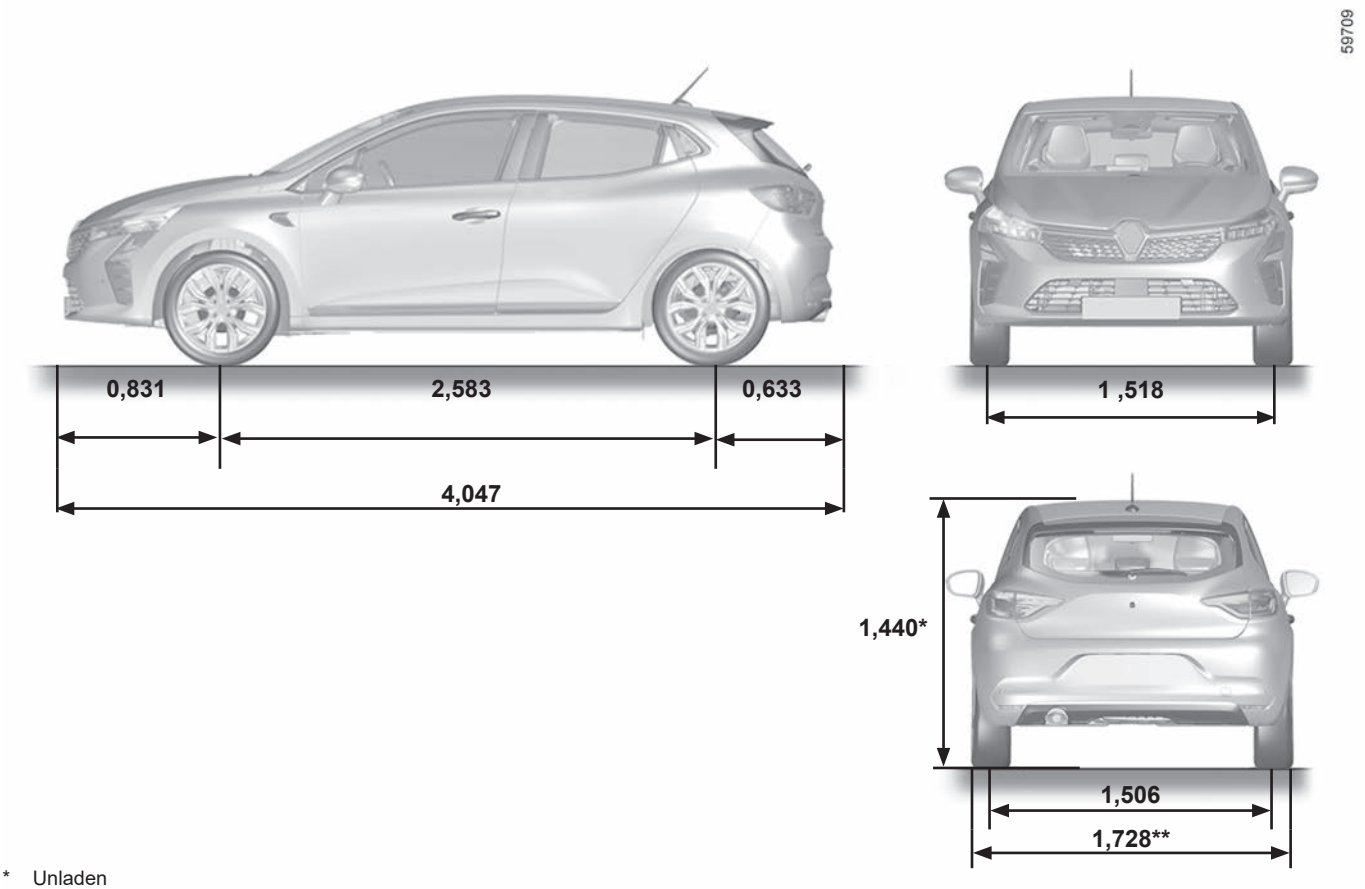

* Unladen

** 1,988 with rear view mirrors open

1,798 with rear view mirrors folded away

ENGINE SPECIFICATIONS (1/3)

Version	**1.0 SCe**	**1.0 TCe**	**E-TECH hybrid**		**1.5 dCi**
Engine type (see engine plate)	B4D	H4D Turbo	H4M	5DH	K9K Turbo
Cubic capacity (cc)	999	999	1598	-	1461
Type of fuel **Octane rating**	Petrol You **must** use unleaded petrol with the octane rating stated on the label inside the fuel filler flap. ➥ 1.127.			-	Diesel The label located in the fuel filler flap indicates the authorised fuels.

ENGINE SPECIFICATIONS (2/3)

Version	1.0 SCe	1.0 TCe	E-TECH hybrid		1.5 dCi
Engine type (see engine plate)	B4D	H4D Turbo	H4M	5DH	K9K Turbo
Cubic capacity (cc)	999	999	1598	-	1461
Fuel types that meet European standards and are compatible with the engines of vehicles sold in Europe (in any other case, contact an Approved Dealer).	E5 Unleaded petrol compliant with standard **EN 228** contains up to 5% ethanol in volume. E10 Unleaded petrol compliant with standard **EN 228** contains up to 10% ethanol in volume.			-	B7 Diesel fuel compliant with standard **EN 590** contains up to 7% fatty acid methyl ester in volume. B10 Diesel fuel compliant with standard **EN 16734** contains up to 10% fatty acid methyl ester in volume. XTL Diesel fuel compliant with standard **EN 15940** contains up to 7% acid methyl ester in volume.

ENGINE SPECIFICATIONS (3/3)

Version	1.0 SCe	1.0 TCe	E-TECH Hybrid		1.5 dCi
Engine type (see engine plate)	B4D	H4D Turbo	H4M	5DH	K9K Turbo
Cubic capacity (cc)	999	999	1598	-	1461
Spark plugs	Only use the spark plugs specified for your vehicle's engine. The type should be marked on a label affixed inside the engine compartment. If it is not then contact an approved Dealer. Fitting spark plugs other than those specified may damage the engine.			-	–

WEIGHTS (in kg)

The weights indicated for a basic vehicle without options: they vary depending on your vehicle's equipment. Consult your approved Dealer.

Maximum Authorised Mass (MMAC) **Maximum permissible weight (MMTA)** **Gross Train Weight (MTR)**	Weights indicated on the vehicle identification plate ➥ 6.2
Braked Trailer Weight*	found by calculating: **MTR - MMAC**
Unbraked Trailer Weight*	550 kg
Permissible nose weight*	63 kg
Maximum permissible load on roof	80 kg (including carrying device)

*** Towing weight (towing a caravan, boat, etc.)**

Towing is prohibited when the MTR - MMAC calculation is equal to zero, or when the MTR is equal to zero (or is not listed) on the identification plate.

- It is important to comply with the towing weights, governed by local legislation in each country and, in particular, laid down in the Road Traffic Regulations. Contact an approved Dealer about any towing equipment.
- When towing, under no circumstances may **the total train weight (vehicle + trailer) be exceeded**. However the following is permitted:
  - rear MMTA exceeded by no more than 15%;
  - maximum MMAC exceeded by no more than 10% or 100 kg (whichever is reached first).

  In either case, the maximum speed of the vehicle and trailer must not exceed 60 mph (100 km/h) and the tyre pressures must be increased by 0.2 bar (3 PSI).
- The engine output and climbing capability are reduced with altitude. We recommend that the maximum load be reduced by 10% at an altitude of 1,000 metres and by an additional 10% for each 1,000 metres thereafter.

REPLACEMENT PARTS AND REPAIRS

Original parts are based on strict specifications and are subject to highly-specialised tests. Therefore, they are of at least the same level of quality as the parts fitted originally.

If you always fit genuine replacement parts to your vehicle, you will ensure that it performs well. Furthermore, repairs carried out within the manufacturer's Network using original parts are guaranteed according to the conditions set out on the reverse of the repair order.

SERVICE SHEETS (1/6)

VIN: .....

Date: Miles (Km):	Invoice number:	Comments/miscellaneous
Type of operation: Service □ ..... □ **Anti-corrosion check:** OK □ Not OK* □ *See specific page	**Stamp**	

Date: Miles (Km):	Invoice number:	Comments/miscellaneous
Type of operation: Service □ ..... □ **Anti-corrosion check:** OK □ Not OK* □ *See specific page	**Stamp**	

Date: Miles (Km):	Invoice number:	Comments/miscellaneous
Type of operation: Service □ ..... □ **Anti-corrosion check:** OK □ Not OK* □ *See specific page	**Stamp**	

SERVICE SHEETS (2/6)

VIN: .....

Date: Miles (Km):	Invoice number:	Comments/miscellaneous
Type of operation: Service □ ..... □ **Anti-corrosion check:** OK □ Not OK* □ *See specific page	**Stamp**	

Date: Miles (Km):	Invoice number:	Comments/miscellaneous
Type of operation: Service □ ..... □ **Anti-corrosion check:** OK □ Not OK* □ *See specific page	**Stamp**	

Date: Miles (Km):	Invoice number:	Comments/miscellaneous
Type of operation: Service □ ..... □ **Anti-corrosion check:** OK □ Not OK* □ *See specific page	**Stamp**	

SERVICE SHEETS (3/6)

VIN: .....

Date: Miles (Km):	Invoice number:	Comments/miscellaneous
Type of operation: Service □ ..... □ **Anti-corrosion check:** OK □ Not OK* □ *See specific page	**Stamp**	

Date: Miles (Km):	Invoice number:	Comments/miscellaneous
Type of operation: Service □ ..... □ **Anti-corrosion check:** OK □ Not OK* □ *See specific page	**Stamp**	

Date: Miles (Km):	Invoice number:	Comments/miscellaneous
Type of operation: Service □ ..... □ **Anti-corrosion check:** OK □ Not OK* □ *See specific page	**Stamp**	

SERVICE SHEETS (4/6)

VIN: .....

Date: Miles (Km):	Invoice number:	Comments/miscellaneous
Type of operation: Service □ ..... □ **Anti-corrosion check:** OK □ Not OK* □ *See specific page	**Stamp**	

Date: Miles (Km):	Invoice number:	Comments/miscellaneous
Type of operation: Service □ ..... □ **Anti-corrosion check:** OK □ Not OK* □ *See specific page	**Stamp**	

Date: Miles (Km):	Invoice number:	Comments/miscellaneous
Type of operation: Service □ ..... □ **Anti-corrosion check:** OK □ Not OK* □ *See specific page	**Stamp**	

SERVICE SHEETS (5/6)

VIN: .....

Date: Miles (Km):	Invoice number:	Comments/miscellaneous
Type of operation: Service □ ..... □ **Anti-corrosion check:** OK □ Not OK* □ *See specific page	**Stamp**	

Date: Miles (Km):	Invoice number:	Comments/miscellaneous
Type of operation: Service □ ..... □ **Anti-corrosion check:** OK □ Not OK* □ *See specific page	**Stamp**	

Date: Miles (Km):	Invoice number:	Comments/miscellaneous
Type of operation: Service □ ..... □ **Anti-corrosion check:** OK □ Not OK* □ *See specific page	**Stamp**	

SERVICE SHEETS (6/6)

VIN: .....

Date: Miles (Km):	Invoice number:	Comments/miscellaneous
Type of operation: Service □ ..... □ **Anti-corrosion check:** OK □ Not OK* □ *See specific page	**Stamp**	

Date: Miles (Km):	Invoice number:	Comments/miscellaneous
Type of operation: Service □ ..... □ **Anti-corrosion check:** OK □ Not OK* □ *See specific page	**Stamp**	

Date: Miles (Km):	Invoice number:	Comments/miscellaneous
Type of operation: Service □ ..... □ **Anti-corrosion check:** OK □ Not OK* □ *See specific page	**Stamp**	

ANTICORROSION CHECK (1/5)

If the continuation of the warranty is subject to repair, it is indicated below.

VIN: .....

Corrosion repair operation to be carried out: Date of repair:		**Stamp**
Repair to be carried out: Date of repair:		**Stamp**
Repair to be carried out: Date of repair:		**Stamp**

ANTICORROSION CHECK (2/5)

If the continuation of the warranty is subject to repair, it is indicated below.

VIN: .....

Corrosion repair operation to be carried out: Date of repair:	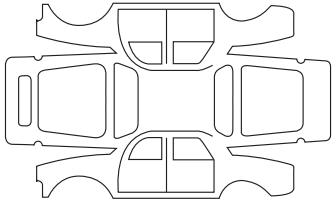	**Stamp**
Repair to be carried out: Date of repair:	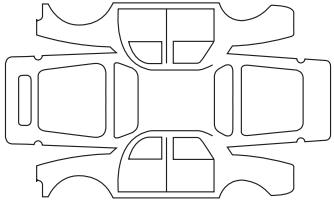	**Stamp**
Repair to be carried out: Date of repair:	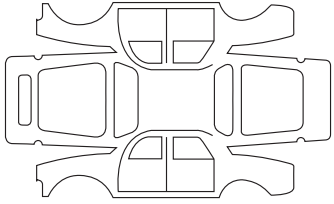	**Stamp**

ANTICORROSION CHECK (3/5)

If the continuation of the warranty is subject to repair, it is indicated below.

VIN: .....

Corrosion repair operation to be carried out: Date of repair:		**Stamp**
Repair to be carried out: Date of repair:		**Stamp**
Repair to be carried out: Date of repair:		**Stamp**

ANTICORROSION CHECK (4/5)

If the continuation of the warranty is subject to repair, it is indicated below.

VIN: .....

Corrosion repair operation to be carried out: Date of repair:	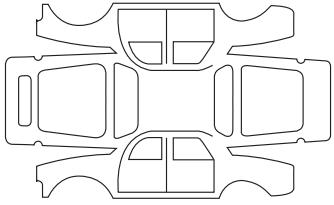	**Stamp**
Repair to be carried out: Date of repair:	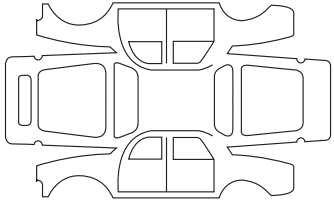	**Stamp**
Repair to be carried out: Date of repair:	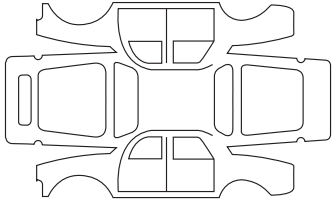	**Stamp**

ANTICORROSION CHECK (5/5)

If the continuation of the warranty is subject to repair, it is indicated below.

VIN: .....

Corrosion repair operation to be carried out: Date of repair:	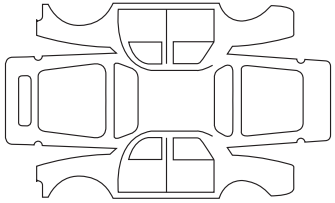	**Stamp**
Repair to be carried out: Date of repair:	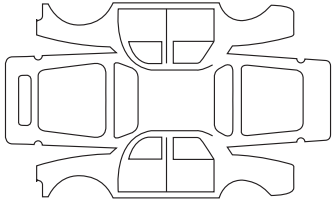	**Stamp**
Repair to be carried out: Date of repair:	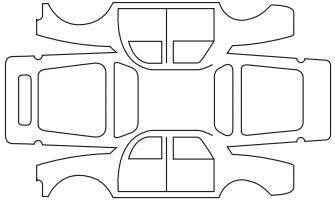	**Stamp**

ALPHABETICAL INDEX (1/7)

A

ABS ....1.81, 2.46 → 2.50
access
  vehicle....0.2, 1.13 → 1.21, 1.27 → 1.32
  accessories....2.9, 5.33
accessories - installation 5.33
accessories socket ....3.18 – 3.19, 3.32
adaptive cruise control....2.103 → 2.116
AdBlue....1.132 → 1.135
additional methods of restraint
  side protection 1.49
  to the front seat belts ....1.42 → 1.47
  to the rear seat belts 1.48
additional methods of restraint 1.50
additional tank capacity 1.93, 1.99
additional tank filling 1.81
adjusting your driving position ....1.34 → 1.41, 1.113, 3.33
advice on antipollution 1.101, 2.38
air bag
  activating the front passenger air bags.... 1.59, 1.66, 1.71 → 1.73
air bag....0.6, 1.42 → 1.50, 1.57, 1.59 → 1.64, 1.66 – 1.67, 1.71 → 1.73, 1.78 – 1.79, 1.83, 1.101
air conditioning ....3.4 → 3.17
air vents ....3.4 – 3.5
airbag
  front passenger airbag deactivation....1.67, 1.71 → 1.73
anti-corrosion check ....6.18 → 6.22
anti-corrosion protection 4.17
anti-lock braking system: ABS ....2.46 → 2.50
antipollution
  advice 2.38
armrest
  front....1.34, 3.29
ashtray....3.32
assisted parking....1.82, 2.133 → 2.147
audible and visual signals.... 1.118
AUTO mode.... 1.112 → 1.114
Autohold 2.28
automatic gearbox (use)....2.23, 2.27, 2.148 → 2.152
automatic gearbox selector lever....2.148 → 2.152
automatic locking of the doors while driving 1.33

B

batteries....5.25 – 5.26
battery
  breakdown recovery ....5.27 → 5.31
battery....0.8, 1.79, 4.14 → 4.16, 5.27 → 5.31
battery (remote control) 5.23
beep....1.102
blind spot warning signal ....2.62 → 2.68
bonnet....4.2 – 4.3
brake....2.28
brake fluid 4.10
breakdown recovery 0.9
bulbs
  changing ....5.16 → 5.22

C

card ....1.15 → 1.21, 1.27 → 1.32
card: battery....5.25 – 5.26
card: use....1.15 → 1.21
catalytic converter....2.15 → 2.18
central door locking .... 1.11 – 1.12, 1.14 → 1.22, 1.27 → 1.30, 1.33, 1.103 – 1.104
changing a bulb ....5.16 → 5.20
changing a wheel.... 5.11 – 5.12
changing gear....1.80, 2.23, 2.29, 2.148 → 2.152
child restraint/seat ....1.51 – 1.52, 1.54 → 1.64, 1.66 → 1.70
child safety....0.3, 1.16, 1.18, 1.32, 1.47, 1.51 – 1.52, 1.54 → 1.64, 1.66 → 1.73, 3.20 → 3.22
child seats....1.51 – 1.52, 1.54 → 1.64, 1.66 → 1.70

children ..... 0.3, 1.51 – 1.52, 1.57 → 1.64, 1.66 → 1.73, 3.20 → 3.22
children (safety) 1.32
cigar lighter 3.32
cleaning:
inside the vehicle ..... 4.20 – 4.21
clock
setting 1.93, 1.97
clock ..... 1.106 – 1.107, 1.107
closing the doors ..... 1.15 → 1.21, 1.27 → 1.33
configuration menu ..... 1.103 → 1.105
control instruments .. 1.78 → 1.83, 1.86 → 1.94, 1.106 – 1.107
controls
doors/opening elements ..... 1.18 → 1.21
steering wheel ..... 3.18 – 3.19
controls ..... 0.4, 1.74 → 1.77, 2.94, 2.98
cornering light 1.117
courtesy light ..... 3.24 → 3.26, 5.21
courtesy mirrors 3.23
cruise control ..... 1.82, 2.98 → 2.102
cruise control-speed limiter ..... 1.82, 2.94 → 2.102
customised vehicle settings ..... 1.103 → 1.105
customising the vehicle settings ..... 1.103 → 1.105

D

dashboard ..... 0.4, 1.74 → 1.77
daytime running lights ..... 1.11 – 1.12, 1.15 → 1.17, 1.104, 1.112 → 1.117
deadlocking the doors 1.14, 1.22
demisting
rear screen ..... 3.6, 3.12 → 3.15
windscreen ..... 3.9, 3.12 → 3.15
dimensions 6.6
dipstick 4.4
display ..... 1.78 → 1.84, 1.86 → 1.90, 3.18
doors ..... 1.31 – 1.32, 1.80, 1.103 – 1.104
doors and tailgate ..... 1.13, 1.18 → 1.21
doors/tailgate ..... 1.13, 1.15 → 1.21, 1.27 → 1.30, 1.33
driver assistance ..... 0.5, 2.46, 2.51 → 2.116, 2.133 → 2.147, 2.153 → 2.155, 3.2
driver's position ..... 0.4, 1.74 → 1.83, 1.79 → 1.83
driving ..... 0.5, 1.103 – 1.104, 2.2, 2.4 → 2.10, 2.15 → 2.18, 2.24 → 2.37, 2.40 → 2.89, 2.94 → 2.102, 2.133 → 2.155, 3.2
driving aids
adaptive cruise control ..... 2.103 → 2.116
driving aids ..... 0.5, 1.82, 1.104 – 1.105, 2.51 → 2.102, 2.117 → 2.147, 2.153 → 2.155, 3.2
driving position
settings ..... 0.3, 1.37 → 1.41, 1.108 – 1.109
driving recommendations ..... 2.29, 2.31, 2.34, 2.36 – 2.37

E

ECO driving ..... 1.81, 2.29 → 2.37
ECO mode 2.29, 2.34, 2.37, 3.14
«ECO» mode function 1.81
electric beam height adjustment 1.119
electric windows ..... 3.20 → 3.22
electronic parking brake ..... 1.80, 2.24 → 2.28
electronic stability control: ESC ..... 1.80, 2.46 → 2.50
emergency active braking ..... 1.82, 2.82 → 2.89
emergency brake assist ..... 1.82, 2.46 → 2.50
emergency braking ..... 1.82, 2.46 → 2.50, 2.82 → 2.89
emergency call ..... 2.153 → 2.155
emergency key ..... 1.15 → 1.17
emergency spare wheel ..... 5.2 → 5.5
energy
«ECO» mode 1.81
engine
technical specifications ..... 6.7 → 6.9
engine coolant 1.81, 1.87, 4.8
engine identification 0.7, 6.4
engine oil ..... 4.4 → 4.7

ALPHABETICAL INDEX (3/7)

engine oil capacity ..... 4.5 → 4.7
engine oil level ..... 4.4 → 4.7
engine specifications ..... 6.4 – 6.5, 6.7 → 6.9
engine standby ..... 1.82, 2.11 → 2.14
engine start/stop button ..... 2.7 → 2.10
environment 2.39
equipment
  fitting 3.39
ESC: electronic stability control ..... 2.46 → 2.50
external temperature ..... 1.106 – 1.107

F

faults
  operating faults .....
  1.134 – 1.135, 2.15 → 2.18, 2.27, 2.47 → 2.50, 2.66, 2.86, 2.93, 2.137, 2.152, 2.155, 3.21, 5.42 → 5.48
  file 1.34
filling with reagent ..... 1.132 → 1.135
filter
  air filter 4.11
  diesel filter 1.101
  oil filter ..... 4.5 → 4.7
  particle filter 1.81, 2.16
  passenger compartment filter 4.11
fitting a radio 5.32
fittings ..... 3.27 → 3.31
front seat adjustment ..... 1.34 – 1.35
front seats
  adjustment ..... 1.34 → 1.37
  fuel
  advice on fuel ..... 2.29 → 2.37
  consumption 2.29
  filling ..... 1.127 → 1.131
  quality ..... 1.127 → 1.131
fuel consumption ..... 1.93, 2.29 → 2.37
fuel economy ..... 2.29 → 2.37
fuel filler cap ..... 0.2, 1.15 → 1.17, 1.127 → 1.131
fuel repriming 2.17
fuel tank
  capacity 1.127
fuel tank capacity ..... 1.127 → 1.131
fuses ..... 0.9, 5.34 → 5.37

G

gear lever 2.23, 2.148
grab handle 3.31

H

handbrake ..... 2.23 – 2.24
hands-free telephone integrated control ..... 3.18 – 3.19
«hands-free» card: use ..... 1.18 → 1.21
hazard warning lights signal 1.118
headlight beam adjustment 1.119
headrest 1.36, 3.33
heated seats 1.35
heated steering wheel 1.108
heated windscreen ..... 3.12 → 3.15
heating and air conditioning system ..... 3.6 → 3.17
heating system ..... 3.6 → 3.15
Hill Start Assist ..... 2.46 → 2.50
horn 1.118
horn:
  flash 1.118
hubcap tool ..... 5.9 – 5.10

I

ignition switch ..... 2.3, 2.24 → 2.27
indicator lights 5.19
indicators ..... 1.118, 2.64, 5.16 → 5.20
indicators:
  direction indicators 1.118

instrument panel . 1.78 → 1.83, 1.79 → 1.83, 1.86 → 1.94, 1.134 – 1.135, 2.11 → 2.14, 2.16 – 2.18, 2.23 → 2.38
information and general advice 0.1
instrument panel ..... 0.4, 1.78 → 1.83, 1.86 → 1.102, 1.104 – 1.105, 2.11 → 2.14, 2.23 → 2.38
instrument panel messages ..... 1.91 → 1.102, 1.134 – 1.135, 2.11 → 2.14, 2.16 – 2.18, 2.24 → 2.27
interior lighting:
changing bulbs 5.21
interior trim
maintenance ..... 4.20 – 4.21
Isofix ..... 1.54 → 1.56, 1.58, 1.66 → 1.70

J
jack ..... 5.3, 5.9, 5.11 – 5.12

K
key/remote control
deadlocking 1.14
keys
replacing the battery 5.23, 5.25
keys ..... 1.11 → 1.14

L
lane centring ..... 2.123 → 2.132
lane departure warning ..... 1.82, 2.51 → 2.61
Lane Keeping Assist ..... 2.56 → 2.61
lane keeping: assistance ..... 2.56 → 2.61
level information
engine oil 1.80, 1.90
levels ..... 0.8, 4.8 → 4.11
levels:
brake fluid 4.10
coolant 4.8
fuel ..... 1.81 → 1.90, 1.127 → 1.131
windscreen washer reservoir 4.11
lifting the vehicle
changing a wheel ..... 5.11 – 5.12
lighting:
exterior ..... 0.2, 1.112 → 1.119
instrument panel ..... 1.112 → 1.117
interior ..... 3.24 → 3.26, 5.21 – 5.22
see-me-home ..... 1.103 – 1.104, 1.116
lights
adjustment 1.119
changing bulbs 5.16
front 5.16
lights:
adjusting 1.119
adjustment of headlight beam height 1.119
brake lights ..... 5.17 → 5.20
dipped beam headlights ..... 1.78 – 1.79, 1.112 – 1.113, 1.115 – 1.116, 5.16
direction indicators ..... 1.78 – 1.79, 1.118, 5.16 – 5.17
fog lights ..... 1.78 – 1.79, 1.112 → 1.117, 5.18
hazard warning 1.118
main beam headlights ..... 1.78 – 1.79, 1.112 → 1.114, 5.16
number plate lights ..... 5.18 – 5.19
reversing lights 5.18
side lights ..... 1.112, 1.116, 5.16 – 5.17
lights-on warning buzzer 1.32, 1.115
Liquefied Petroleum Gas: LPG 1.94, 1.96, 1.130, 2.19
load permitted on the roof 6.10
locking ..... 1.38 → 1.41
locking the doors ..... 1.13, 1.15 → 1.21, 1.27 → 1.33, 1.103 – 1.104
locking/unlocking the opening elements ..... 1.14 → 1.17, 1.22, 1.31 – 1.32
LPG ..... 2.19 → 2.22
luggage compartment lighting
changing bulbs 5.22

M
maintenance 1.134, 2.38
maintenance:
bodywork ..... 4.17 → 4.19
interior trim ..... 4.20 – 4.21
mechanical ..... 4.4, 4.14 → 4.16, 6.12 → 6.17
mileage before service ..... 1.93, 1.98 – 1.99
map
card emergency key ..... 1.27 → 1.30
deadlocking 1.22
engine not starting in hands-free mode ..... 1.27 → 1.30
locking/unlocking the opening elements ..... 1.27 → 1.30
operating faults ..... 1.27 → 1.30
map reading lights ..... 3.24 → 3.26, 5.21
menu for customising the vehicle settings ..... 1.91, 1.103 → 1.105
methods of restraint in addition to the seat belts ... 1.42 → 1.50
mileage before service ..... 1.93, 1.98 – 1.99
mobile floor 3.37
Motorway and Traffic assistant ..... 2.117 → 2.132
multimedia (equipment) ..... 3.18 – 3.19
multimedia equipment ..... 1.90, 1.103, 1.106, 1.115, 3.14, 3.18 – 3.19, 5.32
Multi-Sense ..... 1.109, 3.2 – 3.3
multi-view camera ..... 2.73 → 2.81

N
navigation ..... 3.18 – 3.19
navigation system ..... 3.18 – 3.19

O
of warning sound
door/luggage compartment open reminder alarm 1.32
oil change ..... 4.5 → 4.7
opening the doors ..... 1.27 → 1.33
opening/closing
doors 1.13
opening/closing
doors and tailgate ..... 1.27 → 1.32
operating faults ..... 1.12, 1.15, 1.33, 1.35, 1.44, 1.73, 1.78 → 1.83, 1.91, 1.93, 1.101 – 1.102, 1.114 – 1.115, 1.122, 1.134 – 1.135, 2.9, 2.14 → 2.18, 2.27, 2.47 → 2.50, 2.54, 2.60, 2.66, 2.86, 2.93, 2.110, 2.137, 2.152, 2.155, 3.21, 5.23, 5.25, 5.42 → 5.48
operation 2.148
overspeed buzzer 1.86
overspeed warning ..... 1.82, 1.84, 2.90 → 2.93

P
paint
maintenance ..... 4.17 → 4.19
parking assistance: assisted parking ..... 2.133 → 2.147
parking brake ..... 1.100, 2.24 → 2.28
parking distance control ..... 1.104 – 1.105, 2.133 → 2.139, 2.137, 2.140 → 2.142
pedestrian detection ..... 2.82 → 2.89
power-assisted steering 1.109
precautions during use ..... 1.120 → 1.124
pretensioners ..... 1.42 → 1.47
puncture ..... 0.9, 1.102, 5.2 → 5.9, 5.11 – 5.12

Q
QR Code 0.7, 6.3

R
radio ..... 3.18 – 3.19
radio frequency remote control/key
battery 5.23
use ..... 1.11 → 1.13
range with fuel 1.81, 1.84, 1.86
reagent (tank) ..... 1.132 → 1.135

reagent quality ....1.132 → 1.135
reagent tank....1.132 → 1.135
reagent tank cap....1.132 → 1.135
reagent tank capacity ....1.132 → 1.135
rear bench seat.... 1.56, 1.58, 3.34
rear parcel shelf.... 1.58, 3.36
rear seat 1.56
rear seats
functions 3.34
rear seats.... 1.40
rear view camera ....2.140 → 2.142
rear view mirrors.... 0.2, 1.109 → 1.111
remote control
batteries 5.23
remote control
card ....1.15 → 1.17
deadlocking.... 1.14
map ....1.15 → 1.17
remote control ....1.18 → 1.21
remote control door locking unit ....1.11 → 1.13
replacement parts.... 6.11
reverse gear
selecting.... 2.23
reversing sensor ....2.133 → 2.139
roof bars 3.40
roof rack
roof bars.... 3.40
running in.... 2.2

S

safety distance warning ....2.69 → 2.72
safety distances....2.69 → 2.72
SCR: selective catalytic reduction ....1.132 → 1.135
screen
navigation display .... 3.18 – 3.19
navigation screen.... 3.18 – 3.19
screen wash/wipe
replacing blades.... 1.123
screens
multimedia screen. 2.32, 2.53, 2.59, 2.63, 2.70, 2.73, 2.75, 2.78, 2.85, 2.135, 2.140 → 2.143, 3.2, 3.18 – 3.19
seat belt pretensioners
front seat belt ....1.42 → 1.47
seat belt pretensioners 1.48
seat belts .. 0.6, 1.37 → 1.47, 1.50, 1.54 → 1.56, 1.59 → 1.64, 1.66 → 1.70, 1.83, 4.20
seats 0.3
service sheets....6.12 → 6.17
settings
configuration menu ....1.103 → 1.105
settings ....1.103 → 1.105
Shift Paddle 2.148
side protection devices .... 1.48 – 1.49
sign detection: overspeed warning ....2.90 → 2.93
signals and lights .... 1.112 → 1.119
speakers
location 5.32
special features of diesel versions.... 2.17 – 2.18
special features of LPG versions....2.19 → 2.22
special features of petrol vehicles .... 2.15 – 2.16
speed limiter ....1.82, 2.94 → 2.97
spoiler 3.40
starting.... 1.100
starting the engine ....2.3 → 2.14
steering wheel
adjustment 1.108
steering wheel controls.... 3.18 – 3.19
Stop & Start .... 1.109, 1.129, 1.132, 2.28 – 2.29
Stop & Start function....2.11 → 2.14, 2.24, 2.28 – 2.29
stopping the engine ....2.4 → 2.6, 2.10, 2.24 → 2.27
storage compartment....3.27 → 3.31
storage compartments....3.27 → 3.31

storage/organisation 0.3
sun visor 3.23
switching on the vehicle ignition ..... 2.3 – 2.4, 2.7 → 2.10

T
tailgate 1.11 – 1.12, 1.15 → 1.17, 1.29, 1.32, 3.35, 3.37 – 3.38
tank
  Brake fluid 4.10
  Coolant 4.8
tanks and reservoirs:
  windscreen washer 4.11
technical specifications ..... 6.6 → 6.11
telephone ..... 3.18 – 3.19
temperature regulation ..... 3.12 → 3.15
tool kit 5.3, 5.9
towing
  breakdown ..... 5.40 – 5.41
  towing equipment 3.39
towing 0.9
towing a caravan 3.39, 6.10
towing hitch ..... 5.9, 5.40 – 5.41
towing rings ..... 3.37 – 3.38
towing weights 6.10
traction control ..... 1.80, 2.46 → 2.50
traction control system: ASR 2.46, 2.48
transporting children .... 1.51 – 1.52, 1.54 → 1.64, 1.66 → 1.70
transporting objects
  in the luggage compartment 3.38
  on the roof 6.10
trims 5.10
trip computer and warning system ..... 1.78 → 1.83, 1.86, 1.91 → 1.102, 1.104
type of fuel 1.13
tyre inflation kit ..... 5.2, 5.6 → 5.8
tyre pressure ... 0.7, 1.93, 1.97, 2.37, 2.40 → 2.45, 4.12 – 4.13, 5.2, 5.7 – 5.8, 5.12, 5.14
tyre pressure loss warning ..... 1.81, 2.40 → 2.45, 5.7
tyre pressures ..... 2.40 → 2.45, 4.12 – 4.13, 5.6 → 5.8
tyres ..... 0.2, 2.37, 2.40 → 2.45, 4.12 – 4.13, 5.13 → 5.15

U
unlocking the doors ..... 1.15 → 1.21, 1.27 → 1.30, 1.33
USB socket 3.18

V
variable power-assisted steering 1.109
vehicle detection ..... 2.82 → 2.89
vehicle identification 0.7
vehicle identification plates 0.7, 6.2
vehicle range 1.134
ventilation
  ventilation ..... 3.4 – 3.5
ventilation ..... 3.4 → 3.15

W
warning lights ..... 1.78 → 1.83, 1.79 → 1.83, 1.86 → 1.102
washing ..... 4.17 → 4.19
weights 6.10
welcome aboard your vehicle
  general introduction 0.1
welcome aboard your vehicle 0.1
wheelbrace 5.9, 5.11
wheels (safety) ..... 5.13 → 5.15
windows 0.2
windscreen de-icing/demisting ..... 3.9, 3.12 → 3.15
windscreen washer ..... 1.120 → 1.126
windscreen washer/wiper
  replacing blades ..... 5.38 – 5.39
windscreen washer/wiper ..... 0.9, 1.103 – 1.104, 5.38 – 5.39
wipers ..... 1.120 → 1.126
wireless charger 3.19

RENAULT S.A.S. SOCIÉTÉ PAR ACTIONS SIMPLIFIÉE AU CAPITAL DE 533 941 113 € / 122-122 BIS, AVENUE DU GENERAL LECLERC
92100 BOULOGNE-BILLANCOURT R.C.S. NANTERRE 780 129 987 — SIRET 780 129 987 03591 / renaultgroup.com

NU 1457-1 – 99 91 034 67S – 03/2023 – Edition anglaise

FR

999103467S

0Y